Appendix A-2
In Depth Bridge Inspection and Evaluation Reports

IN-DEPTH INSPECTION REPORT

D031085 P.I.N. 3501.60

B.I.N. 1002131

TEAM LEADER Andrew J. Fuller, P.E. 59848
NYSPE LICENSE #

ASSISTANT TEAM LEADER Jeffrey M. Reina, P.E.
ASSISTANT TEAM LEADER Logan Bessel
ASSISTANT TEAM LEADER Jerome Getter

FEATURE CARRIED I - 481 Southbound
FEATURE CROSSED NYS Routes 5 & 92

DATE FIELD WORK BEGAN December 18, 2013
DATE FIELD WORK COMPLETED December 19, 2013

TABLE OF CONTENTS

- TP 349 & 350
- IN-DEPTH CONDITION DOCUMENTATION
- IN-DEPTH PHOTO DOCUMENTATION
- ASBESTOS REPORT

TP 349 & TP 350

BRIDGE ELEMENT RATINGS

Inspection Date: 10/2/2012 RC: 33 BIN: 1002131

Bridge Ratings

Carried: 481I 481I33012045 Crossed: 5 5 33083022 CheckValue: 1,810,574,579

Inspection Agency: 10 - NYSDOT Type of Inspection: 1 - BIENNIAL
GTMS: 302 -- Steel - Stringer/Multi-Beam or Girder
POSTINGS: See Gen Rec Page 1 for Postings at time of inspection.
Further Investigation Needed: No
State Highway Number: 61-17 Milepoint: 5.12 AADT/Yr: 16412 / 2010
Orientation: 2 - Northeast Political Unit: 0233 - Town of DEWITT Year Built: 1971
Total Spans: 3 Ramp Bridge Attached To Span: NA BIN: NA
General Recommendation: 4 Computed Condition Rating: 4.344

Abutment Ratings:	**Beg Abut**	**End Abut**
Joint with Deck	5	5
Bearings, Bolts, Pads	3	5
Seats and Pedestals	6	5
Backwall	5	5
Stem (Breastwall)	8	8
Erosion or Scour	4	5
Footings	9	9
Piles	8	8
Recommendation	5	5

Wingwall Ratings:	**Beg Abut**	**End Abut**
Walls	5	5
Footings	9	9
Erosion or Scour	6	6
Piles	9	9

Channel Ratings:	**Channel**
Stream Alignment	8
Erosion and Scour	8
Waterway Opening	8
Bank Protection	8

Approach Ratings:	**Approaches**
Drainage	4
Embankment	6
Settlement	5
Erosion	5
Pavement	5
Guide Railing	4

Number of Flags Issued:

RED: 0 Yellow: 0 Safety: 0

Vulnerability Reviews Recommended: 1=Yes, 2=No, 3=NA, X=NotActive

Hydraulic: 3	Overload: X	Steel: 2
Collision: 2	Concrete: X	Seismic: X

Inspector's Signature: CheckValue: 1,810,574,579 Date: 10/2/2012

David Hann,PE () (Inspector ID:3000055)

Signed copy of this inspection report is available in the appropriate NYSDOT Regional Office

Reviewed By: Date: 11/21/2012

James R. Manning,PE () (QC ID:3000023)

Signed copy of this inspection report is available in the appropriate NYSDOT Regional Office

Inspection Date: 10/2/2012 RC: 33 BIN: 1002131

Span Ratings

Carried: 481I 481I33012045 Crossed: 5 5 33083022 CheckValue: 1,810,574,579

Deck Element Ratings:	001	002	003
Wearing Surface	4	4	4
Curbs	5	5	5
Sidewalks, Fascias	4	4	4
Railings, Parapets	6	6	6
Scuppers	8	8	8
Gratings	8	8	8
Median	8	8	8
Mono Deck Surface	4	5	5

Superstructure Ratings:	001	002	003
Structural Deck	5	5	5
Primary Members	4	4	4
Secondary Members	5	5	5
Paint	4	4	4
Joints	5	5	8
Recommendation	4	4	4

Pier Ratings:	001	002	003
Bearings, Bolts, Pads	5	5	8
Pedestals	5	5	8
Top of Cap or Beam	4	4	8
Stem Solid Pier	8	8	8
Cap Beam	4	4	8
Pier Columns	4	4	8
Footings	9	9	8
Erosion or Scour	6	6	8
Piles	9	9	8
Recommendation	4	4	8

Utility Ratings:	001	002	003
Lighting	8	4	8
Sign Structure	8	5	8
Utilities and Support	8	8	8

Field Notes:

Field Date	Arrival	Departure	Temp (C)	Temp (F)	Weather Conditions
10/1/2012	8:00:00 AM	4:30:00 PM		60	Overcast
10/2/2012	7:30:00 AM	4:30:00 PM		60	Overcast

IN-DEPTH CONDITION DOCUMENTATION

IN DEPTH INSPECTION REPORT

BIN 1002131

Visual Inspection

Miscellaneous concrete and bearing repairs were made to the abutments and piers in 2002 under contract D259214. Deck joints were also replaced under this contract.

Cracks, spalls, and other field observations are shown on the plans. Below is a brief summary of conditions for each feature.

Superstructure

Deck – See Bridge Deck Evaluation Report

Steel – See Structural Steel Inspection Summary

Bearings – Bearing elements typically had minor rust scale. Bearings 1, 7, and 8 on the North Abutment had heavy rust scale.

Substructure

South Abutment – Concrete abutment, backwall, and pedestals contained minor isolated areas of delaminated concrete and cracking. There was minor rust and water staining on the back wall. Pedestal 5 contained delaminated concrete on the top North West face. The remaining pedestal and stem concrete did not appear to be delaminated. The steel deck pan exhibited rust on the East side of all of the girders.

Pier 1 – The North and South faces of the concrete cap beam and the columns contained areas of delaminated concrete and cracking. The pedestal and stem concrete did not appear to be delaminated. Column 1 had several cracks from top to bottom around the entire perimeter. Columns 3 and 4 contained areas of delaminated concrete.

Pier 2 – The North and South faces of the concrete cap beam and the columns contained areas of delaminated concrete and cracking. The pedestal

concrete did not appear to be delaminated. Columns 3 and 4 contained areas of delaminated concrete.

North Abutment – Concrete abutment, backwall, and pedestals contained minor isolated areas of delaminated concrete and cracking. There is minor rust and water staining on the back wall. The pedestal and stem concrete do not appear to be delaminated. 2" rigid insulation was used for joint filler on the bottom side of the deck.

STRUCTURAL STEEL INSPECTION SUMMARY

BIN 1002131

Special Emphasis Inspection Required

Non-Redundant/Fracture Critical Members – No

Pin and Hangers – No

Fatigue-Prone Welds – Yes

Non-Categorized Fatigue-Prone Details – No

Other (Specified in Text) – No

Special Emphasis Details

100% hands on inspection of cover plates performed – no cracks found.

Overall Steel Condition

The steel showed no sign of major deterioration. There were no isolated pockets of major section loss and no areas of concern were observed. The deck pan is starting to show rust on the South Abutment end.

Paint

Paint had started to fail along edges of girders and webs of fascia girders.

Section Loss

Due to the age of the steel a blanket 5% section loss should be used in load rating.

LEGEND

C-X CORE LOCATION

XX PHOTO LOCATION

DELAMINATION

SPALLING

CRACK

MAP CRACKING

MOISTURE

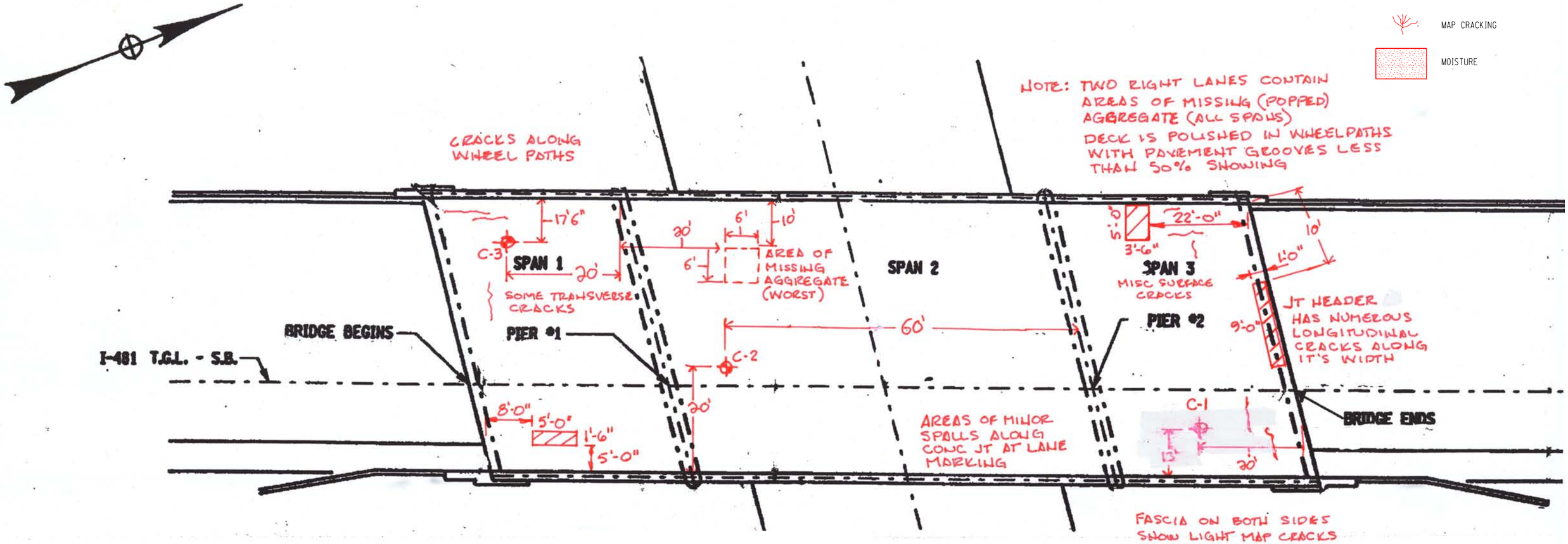

RUST STAINS AND MINOR SPALL AT BOTTOM EDGE OF FASCIA

BIN 1002131
I-481 SB OVER
NYS RT's 5 & 92

FED ROAD REG. NO.	STATE	CONTRACT NO.	SHEET NO.	TOTAL SHEETS
1	N.Y.	D259214	195	432

BRIDGE REHABILITATION PROJECT (ELEMENT SPECIFIC)
VARIOUS BRIDGES ON INTERSTATE 481
TOWNS OF DEWITT AND CICERO
ONONDAGA COUNTY
P.I.N. 305613 B.I.N. 1002131

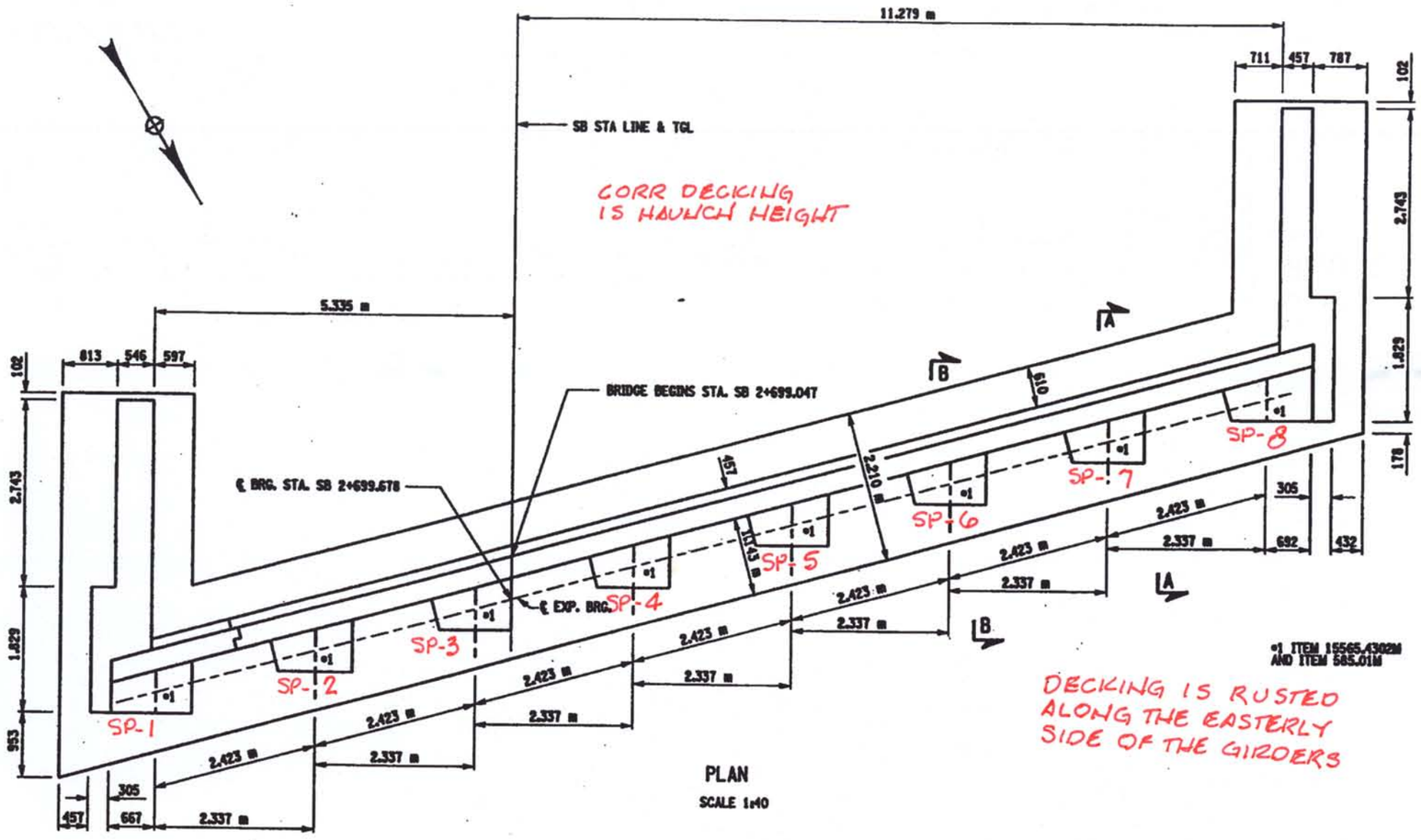

PLAN
SCALE 1:40

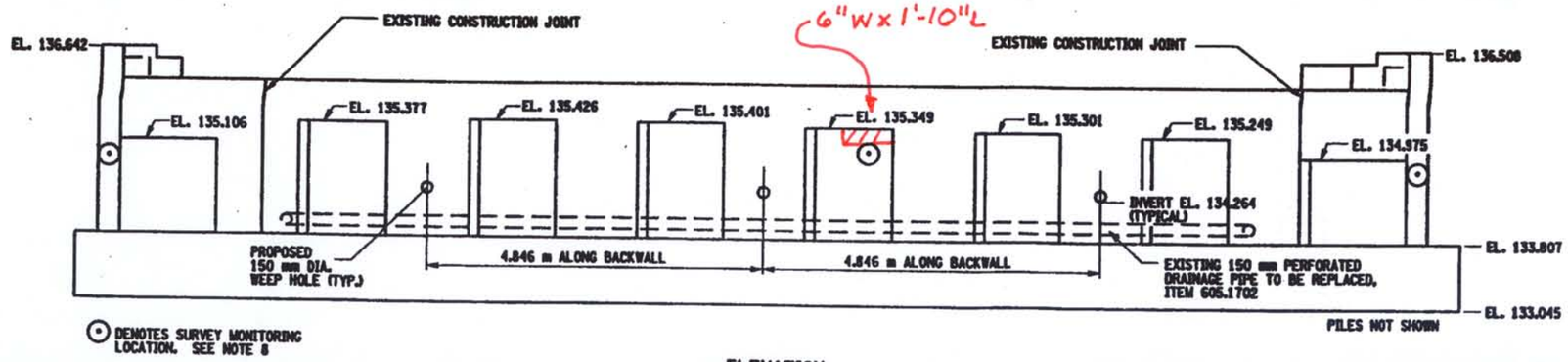

ELEVATION
SCALE 1:40

LEGEND

- CORE LOCATION (C-X)
- PHOTO LOCATION (XX)
- DELAMINATION
- SPALLING
- CRACK
- MAP CRACKING
- MOISTURE
- SP-X SOUTH ABUTMENT PEDESTAL NO. X

LIST OF ITEMS USED:

ITEM 203.19M - CLEANING DRAINAGE STRUCTURES AND MANHOLES (EA)
ITEM 15565.4302M - BRIDGE BEARING RESTORATION (EA)
ITEM 585.01M - STRUCTURAL LIFTING OPERATIONS TYPE A (EA)
ITEM 17586.18M - DRILLING HOLES IN EXISTING SUBSTRUCTURE (LF)
ITEM 605.1702M - OPTIONAL UNDERDRAIN PIPE, 150 mm ϕ, (LF)

ALL DIMENSIONS ARE IN mm UNLESS OTHERWISE NOTED

AS BUILT REVISIONS

SIGNATURE DATE

INTERSTATE 481 SB
OVER
ROUTE 5
SOUTH ABUTMENT

STATE OF NEW YORK
DEPARTMENT OF TRANSPORTATION

FILENAME	REGION	DATE	DRAWING NO.
305613ALA1B	3	10/02	AB1-1

DESIGNED BY ____ DRAFTED BY ____ CHECKED BY ____
JOB MANAGER ____ ESTIMATED BY ____ CHECKED BY ____
DESIGN SUPERVISOR ____

FED ROAD REG. NO.	STATE	CONTRACT NO.	SHEET NO.	TOTAL SHEETS
1	N.Y.	D259214	200	432

BRIDGE REHABILITATION PROJECT (ELEMENT SPECIFIC)
VARIOUS BRIDGES ON INTERSTATE 481
TOWNS OF DEWITT AND CICERO
ONONDAGA COUNTY
P.I.N. 305613 B.I.N. 1002131

NOTES:

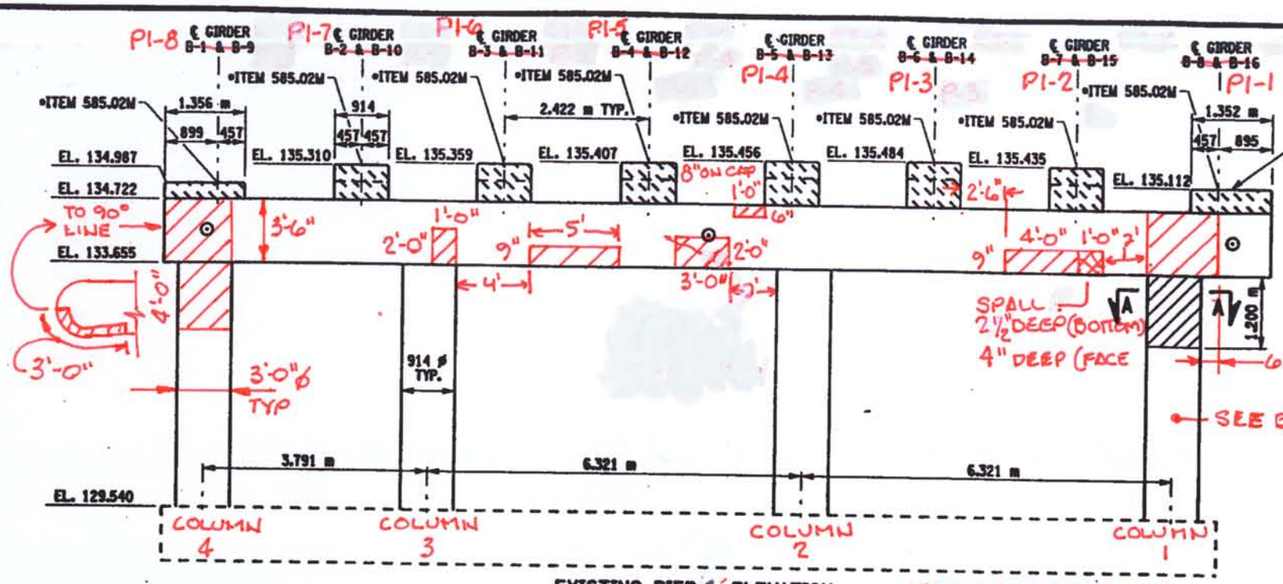

EXISTING PIER 1 ELEVATION
FIXED END
SCALE: 1 TO 50

⊙ DENOTES APPROXIMATE SURVEY MONITORING LOCATIONS - SEE NOTE 8

TOP OF CAPBEAM & BEARING STEEL - HVY COATING OF PIGEON DROPPINGS

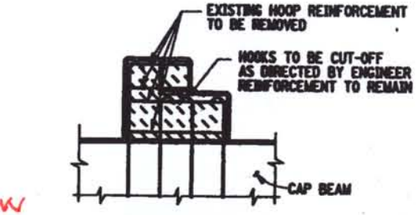

SECTION B-B
EXISTING PEDESTAL ELEVATION
NOT TO SCALE

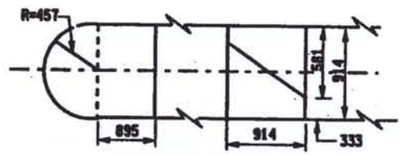

EXISITING PEDESTAL PLAN
NOT TO SCALE

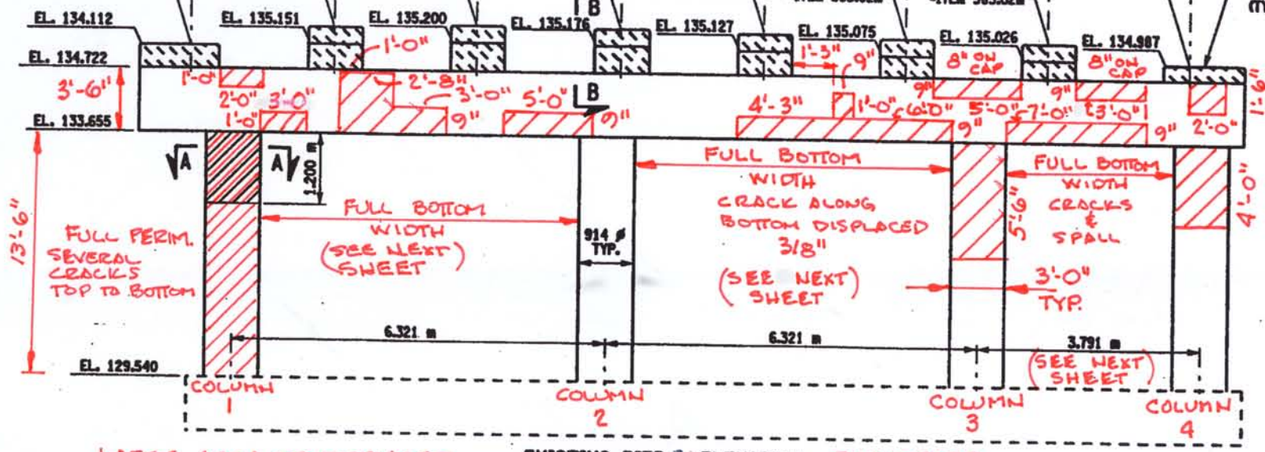

LARGE AREA OF DISPLACED CONC BEGINNING TO SPALL AT & BEHIND PIER PROTECTION

EXISTING PIER 1 ELEVATION
EXPANSION END
ROAD SIDE
SCALE: 1 TO 50

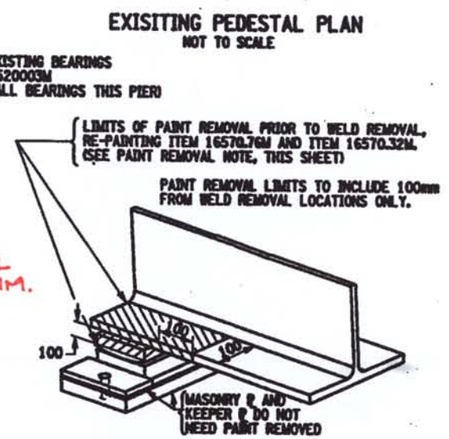

PAINT REMOVAL DETAIL
NOT TO SCALE

PAINT REMOVAL NOTE:

IN CONJUCTION WITH THE USE OF ITEM 16570.32M AND ITEM 16570.76M, ITEM 571.010003M - TREATMENT & DISPOSAL OF PAINT REMOVAL WASTE AND ITEM 570.090003M - ENVIRONMENTAL GROUND PROTECTION SHALL ALSO BE INCORPORATED DURING THE PAINT REMOVAL OPERATIONS.

THE CONTRACTOR SHALL ONLY REMOVE AND REPLACE CONCRETE ON ¼ OF THE CIRCUMFERENCE OF THE COLUMN SIMULTANEOUSLY, FOR THE FULL CURING PERIOD.

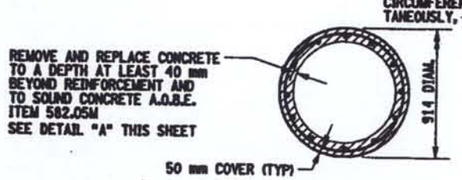

SECTION A-A
NOT TO SCALE

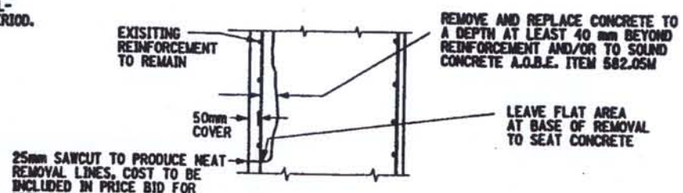

DETAIL A
NOT TO SCALE

LIST OF ITEMS USED:

ITEM 570.090003M - ENVIRONMENTAL GROUND PROTECTION (LS)
ITEM 16570.32M - LOCALIZED PAINTING OF BARE STRUCTURAL STEEL (SM)
ITEM 16570.76M - LOCALIZED VACUUM CONTAINED CLEANING - STRUCTURAL STEEL - IRREGULAR SURFACES (SM)
ITEM 571.010003M - TREATMENT AND DISPOSAL OF PAINT REMOVAL WASTE (CM)
ITEM 580.01M - REMOVAL OF STRUCTURAL CONCRETE (CM)
ITEM 582.05M - REMOVAL OF STRUCTURAL CONCRETE -REPLACE WITH CLASS A CONCRETE (CM)
ITEM 585.02M - STRUCTURAL LIFTING OPERATION TYPE B (EA)
ITEM 589.520003M - REMOVAL OF EXISTING STEEL (EA)

LEGEND

- C-X — CORE LOCATION
- XX — PHOTO LOCATION
- DELAMINATION
- SPALLING
- CRACK
- MAP CRACKING
- MOISTURE
- P1-X — PIER ONE - PEDESTAL NO.

ALL DIMENSIONS ARE IN mm UNLESS OTHERWISE NOTED

AS BUILT REVISIONS

SIGNATURE DATE

INTERSTATE 481 SB
OVER
ROUTE 5
PIER 1
REMOVAL DETAILS

STATE OF NEW YORK
DEPARTMENT OF TRANSPORTATION

FILENAME	REGION	DATE	DRAWING NO.

CHECKED BY
DRAFTED BY
ESTIMATED BY
DESIGNED BY
JOB MANAGER
DESIGN SUPERVISOR

FED ROAD REC. NO.	STATE	CONTRACT NO.	SHEET NO.	TOTAL SHEETS
1	N.Y.	D259214	200	432

BRIDGE REHABILITATION PROJECT (ELEMENT SPECIFIC)
VARIOUS BRIDGES ON INTERSTATE 481
TOWNS OF DEWITT AND CICERO
ONONDAGA COUNTY
P.I.N. 305613 B.I.N. 1002131

DRAFTED BY ____ CHECKED BY ____ ESTIMATED BY ____ DESIGNED BY ____ JOB MANAGER ____ DESIGN SUPERVISOR ____

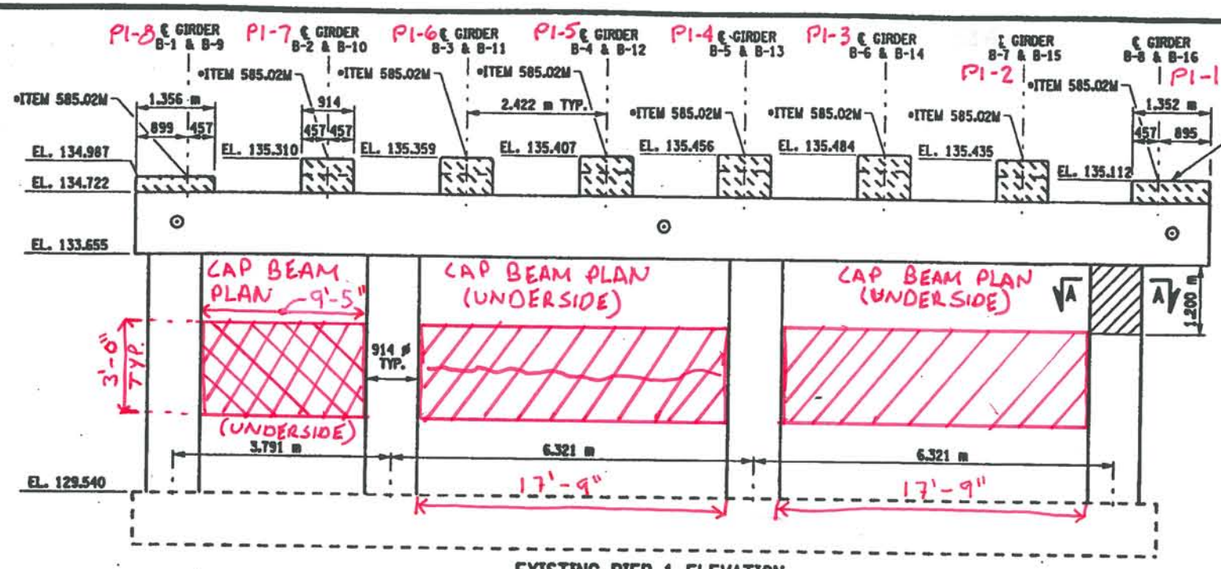

REMOVE EXISTING BEARINGS ITEM 589.520003M (TYPICAL ALL BEARINGS THIS PIER)

⊙ DENOTES APPROXIMATE SURVEY MONITORING LOCATIONS - SEE NOTE 8

EXISTING PIER 1 ELEVATION FIXED END
SCALE: 1 TO 50

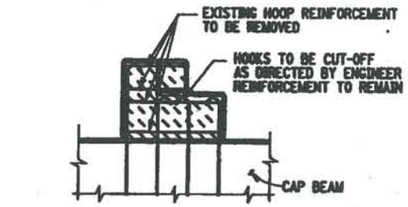

SECTION B-B
EXISTING PEDESTAL ELEVATION
NOT TO SCALE

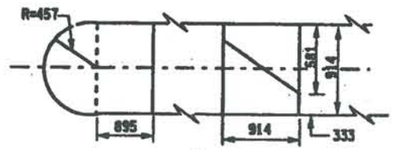

EXISITING PEDESTAL PLAN
NOT TO SCALE

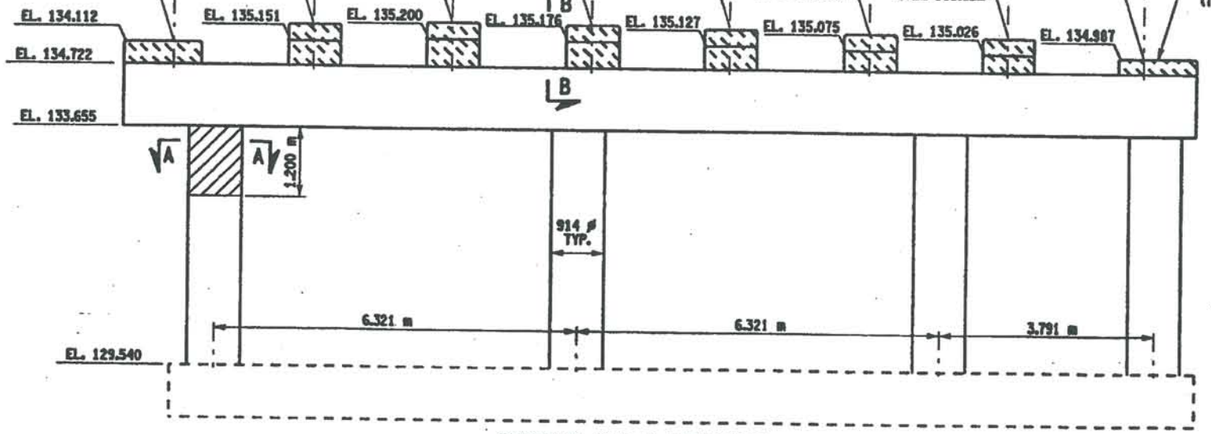

REMOVE EXISTING BEARINGS ITEM 589.520003M (TYPICAL ALL BEARINGS THIS PIER)

EXISTING PIER 1 ELEVATION EXPANSION END
SCALE: 1 TO 50

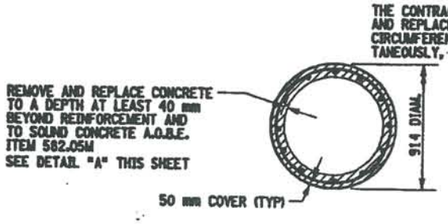

SECTION A-A
NOT TO SCALE

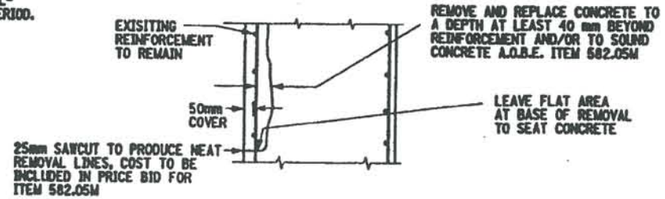

DETAIL A
NOT TO SCALE

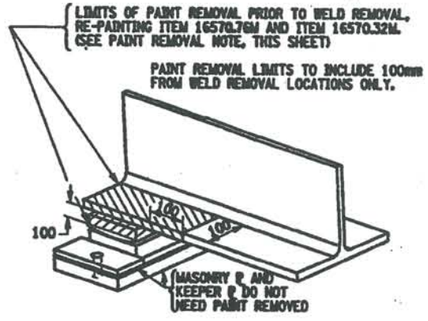

PAINT REMOVAL DETAIL
NOT TO SCALE

PAINT REMOVAL NOTE:

IN CONJUCTION WITH THE USE OF ITEM 16570.32M AND ITEM 16570.76M.
ITEM 571.010003M - TREATMENT & DISPOSAL OF PAINT REMOVAL WASTE AND ITEM 570.090003M - ENVIRONMENTAL GROUND PROTECTION SHALL ALSO BE INCORPORATED DURING THE PAINT REMOVAL OPERATIONS.

LIST OF ITEMS USED:

ITEM 570.090003M - ENVIRONMENTAL GROUND PROTECTION (LS)
ITEM 16570.32M - LOCALIZED PAINTING OF BARE STRUCTURAL STEEL (SM)
ITEM 16570.76M - LOCALIZED VACUUM CONTAINED CLEANING - STRUCTURAL STEEL - IRREGULAR SURFACES (SM)
ITEM 571.010003M - TREATMENT AND DISPOSAL OF PAINT REMOVAL WASTE (CM)
ITEM 580.01M - REMOVAL OF STRUCTURAL CONCRETE (CM)
ITEM 582.05M - REMOVAL OF STRUCTURAL CONCRETE -REPLACE WITH CLASS A CONCRETE (CM)
ITEM 585.02M - STRUCTURAL LIFTING OPERATION TYPE B (EA)
ITEM 589.520003M - REMOVAL OF EXISTING STEEL (EA)

LEGEND

- C-X — CORE LOCATION
- XX — PHOTO LOCATION
- DELAMINATION
- SPALLING
- CRACK
- MAP CRACKING
- MOISTURE
- P1-X — PIER ONE - PEDESTAL NO.

ALL DIMENSIONS ARE IN mm UNLESS OTHERWISE NOTED

AS BUILT REVISIONS

SIGNATURE ____ DATE ____

INTERSTATE 481 SB
OVER
ROUTE 5
PIER 1
REMOVAL DETAILS

STATE OF NEW YORK
DEPARTMENT OF TRANSPORTATION

FILENAME	REGION	DATE	DRAWING NO.

FED ROAD REG. NO.	STATE	CONTRACT NO.	SHEET NO.	TOTAL SHEETS
1	N.Y.	D259214	201	432

BRIDGE REHABILITATION PROJECT (ELEMENT SPECIFIC)
VARIOUS BRIDGES ON INTERSTATE 481
TOWNS OF DEWITT AND CICERO
ONONDAGA COUNTY
P.I.N. 305613 B.I.N. 1002131

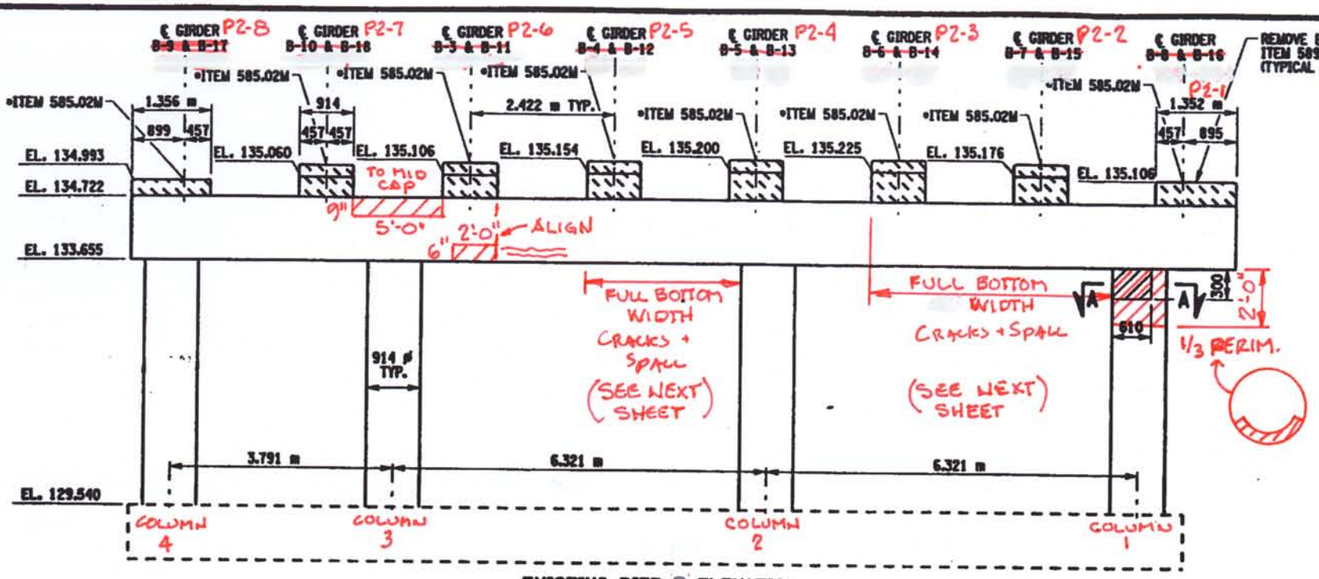

EXISTING PIER 2 ELEVATION
FIXED END ROADSIDE
SCALE: 1 TO 50

REMOVE EXISTING BEARINGS
ITEM 589.520003M
(TYPICAL ALL BEARINGS THIS PIER)

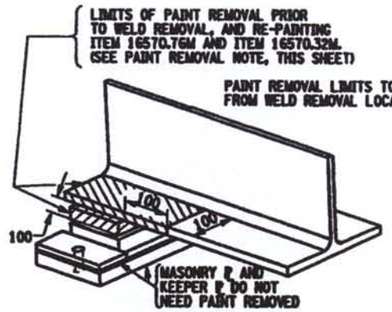

PAINT REMOVAL DETAIL
NOT TO SCALE

PAINT REMOVAL NOTE:

IN CONJUCTION WITH THE USE OF ITEM 16570.32M AND ITEM 16570.76M, ITEM ST1.010003M - TREATMENT & DISPOSAL OF PAINT REMOVAL WASTE AND ITEM ST0.090003M - ENVIRONMENTAL GROUND PROTECTION SHALL ALSO BE INCORPORATED DURING THE PAINT REMOVAL OPERATIONS.

LEGEND

- C-X — CORE LOCATION
- XX — PHOTO LOCATION
- DELAMINATION
- SPALLING
- CRACK
- MAP CRACKING
- MOISTURE
- P2-X — PIER TWO - PEDESTAL NO.

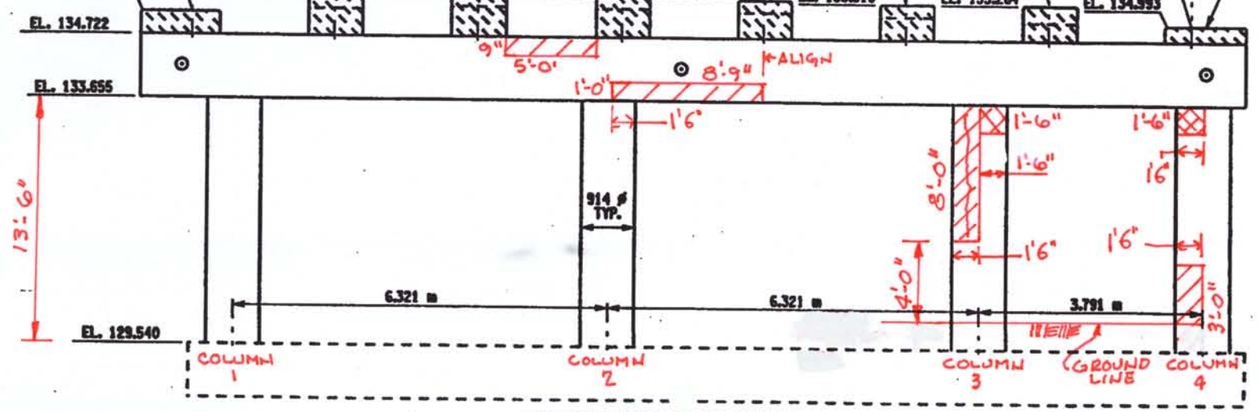

⊙ DENOTES APPROXIMATE SURVEY MONITORING LOCATIONS - SEE NOTE 8

EXISTING PIER 2 ELEVATION
EXPANSION END
SCALE: 1 TO 50

EXISTING PEDESTAL ELEVATION
NOT TO SCALE

THE CONTRACTOR SHALL ONLY REMOVE AND REPLACE CONCRETE ON ½ OF THE CIRCUMFERENCE OF THE COLUMN SIMULTANEOUSLY, FOR THE FULL CURING PERIOD.

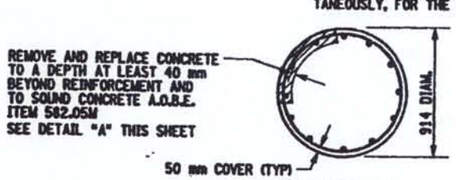

SECTION A-A
NOT TO SCALE

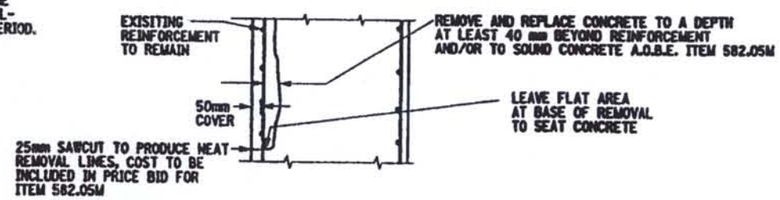

DETAIL A
NOT TO SCALE

LIST OF ITEMS USED:

ITEM 570.090003M - ENVIRONMENTAL GROUND PROTECTION (LS)
ITEM 16570.32M - LOCALIZED PAINTING OF BARE STRUCTURAL STEEL (SM)
ITEM 16570.76M - LOCALIZED VACUUM CONTAINED CLEANING - STRUCTURAL STEEL - IRREGULAR SURFACES (SM)
ITEM 571.010003M - TREATMENT AND DISPOSAL OF PAINT REMOVAL WASTE (CM)
ITEM 580.01M - REMOVAL OF STRUCTURAL CONCRETE (CM)
ITEM 582.05M - REMOVAL OF STRUCTURAL CONCRETE -REPLACE WITH CLASS A CONCRETE (CM)
ITEM 585.02M - STRUCTURAL LIFTING OPERATION TYPE B (EA)
ITEM 589.520003M - REMOVAL OF EXISTING STEEL (EA)

ALL DIMENSIONS ARE IN mm UNLESS OTHERWISE NOTED

AS BUILT REVISIONS

SIGNATURE DATE

INTERSTATE 481 SB
OVER
ROUTE 5
PIER 2
REMOVAL DETAILS

STATE OF NEW YORK
DEPARTMENT OF TRANSPORTATION

FILENAME	REGION	DATE	DRAWING NO.
305613ALP1A	3	10/02	PR1-2

CHECKED BY
DRAFTED BY
ESTIMATED BY
DESIGNED BY
JOB MANAGER
DESIGN SUPERVISOR

P2-2

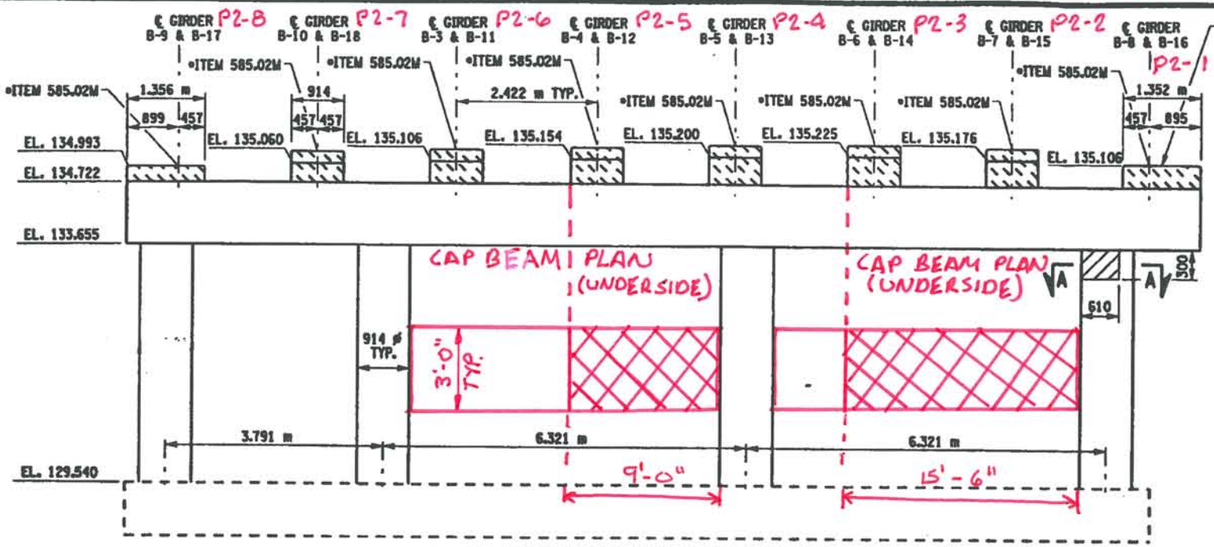

EXISTING PIER 2 ELEVATION
FIXED END

SCALE: 1 TO 50

REMOVE EXISTING BEARINGS
ITEM 589.520003M
(TYPICAL ALL BEARINGS THIS PIER)

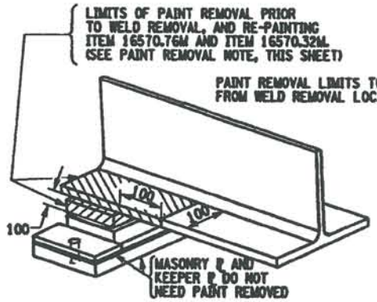

PAINT REMOVAL DETAIL
NOT TO SCALE

PAINT REMOVAL NOTE:

IN CONJUCTION WITH THE USE OF ITEM 16570.32M AND ITEM 16570.76M, ITEM 571.010003M - TREATMENT & DISPOSAL OF PAINT REMOVAL WASTE AND ITEM 570.090003M - ENVIRONMENTAL GROUND PROTECTION SHALL ALSO BE INCORPORATED DURING THE PAINT REMOVAL OPERATIONS.

FED ROAD REG. NO.	STATE	CONTRACT NO.	SHEET NO.	TOTAL SHEETS
1	N.Y.	D259214	201	432

BRIDGE REHABILITATION PROJECT (ELEMENT SPECIFIC)
VARIOUS BRIDGES ON INTERSTATE 481
TOWNS OF DEWITT AND CICERO
ONONDAGA COUNTY
P.I.N. 305613 B.I.N. 1002131

LEGEND

- C-X — CORE LOCATION
- XX — PHOTO LOCATION
- DELAMINATION
- SPALLING
- CRACK
- MAP CRACKING
- MOISTURE
- P2-X — PIER TWO - PEDESTAL NO.

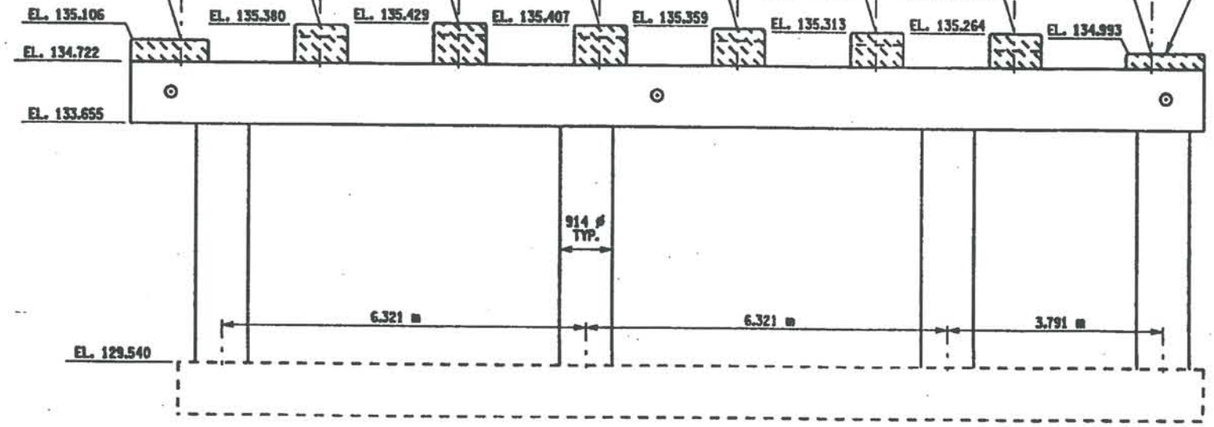

⊙ DENOTES APPROXIMATE SURVEY MONITORING LOCATIONS - SEE NOTE 8

EXISTING PIER 2 ELEVATION
EXPANSION END

SCALE: 1 TO 50

REMOVE EXISTING BEARINGS
ITEM 589.520003M
(TYPICAL ALL BEARINGS THIS PIER)

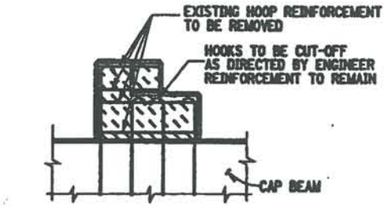

EXISTING PEDESTAL ELEVATION
NOT TO SCALE

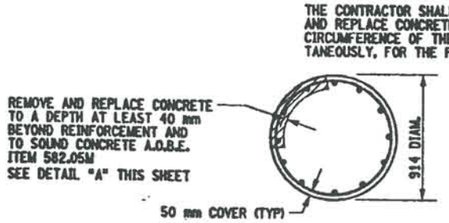

SECTION A-A
NOT TO SCALE

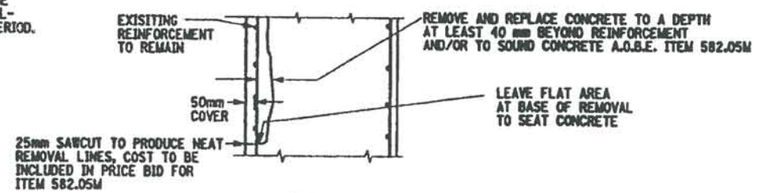

DETAIL A
NOT TO SCALE

LIST OF ITEMS USED:

ITEM 570.090003M - ENVIRONMENTAL GROUND PROTECTION (LS)
ITEM 16570.32M - LOCALIZED PAINTING OF BARE STRUCTURAL STEEL (SM)
ITEM 16570.76M - LOCALIZED VACUUM CONTAINED CLEANING - STRUCTURAL STEEL - IRREGULAR SURFACES (SM)
ITEM 571.010003M - TREATMENT AND DISPOSAL OF PAINT REMOVAL WASTE (CM)
ITEM 580.01M - REMOVAL OF STRUCTURAL CONCRETE (CM)
ITEM 582.05M - REMOVAL OF STRUCTURAL CONCRETE -REPLACE WITH CLASS A CONCRETE (CM)
ITEM 585.02M - STRUCTURAL LIFTING OPERATION TYPE B (EA)
ITEM 589.520003M - REMOVAL OF EXISTING STEEL (EA)

ALL DIMENSIONS ARE IN mm UNLESS OTHERWISE NOTED

AS BUILT REVISIONS

SIGNATURE DATE

INTERSTATE 481 SB
OVER
ROUTE 5
PIER 2
REMOVAL DETAILS

STATE OF NEW YORK
DEPARTMENT OF TRANSPORTATION

FILENAME	REGION	DATE	DRAWING NO.
305613AL.P1A	3	10/02	PR1-2

DESIGN SUPERVISOR — JOB MANAGER — DESIGNED BY — ESTIMATED BY — DRAFTED BY — CHECKED BY

FED ROAD REG. NO.	STATE	CONTRACT NO.	SHEET NO.	TOTAL SHEETS
1	N.Y.	D259214	198	432

BRIDGE REHABILITATION PROJECT (ELEMENT SPECIFIC)
VARIOUS BRIDGES ON INTERSTATE 481
TOWNS OF DEWITT AND CICERO
ONONDAGA COUNTY
P.I.N. 305613 | B.I.N. 1002131

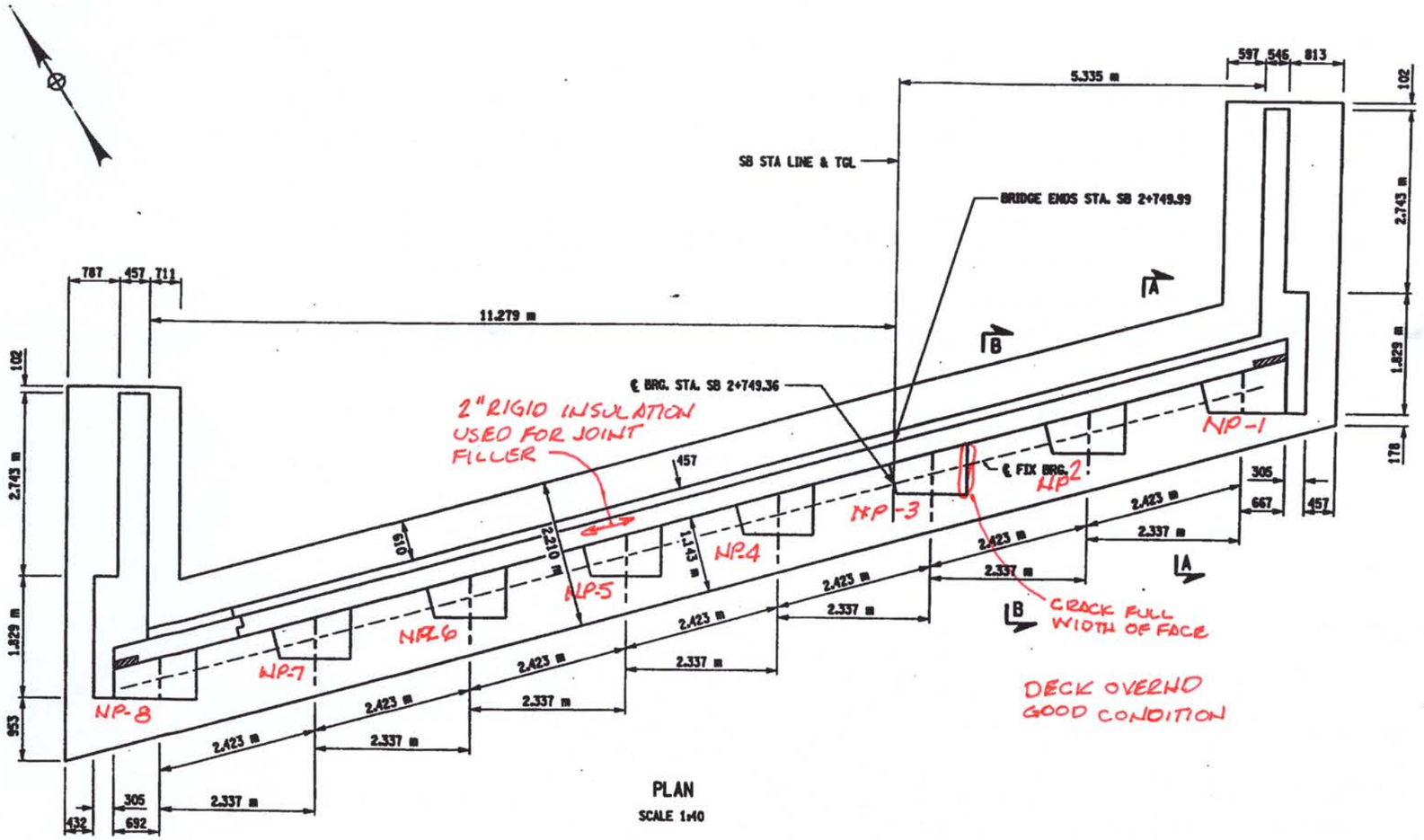

PLAN
SCALE 1:40

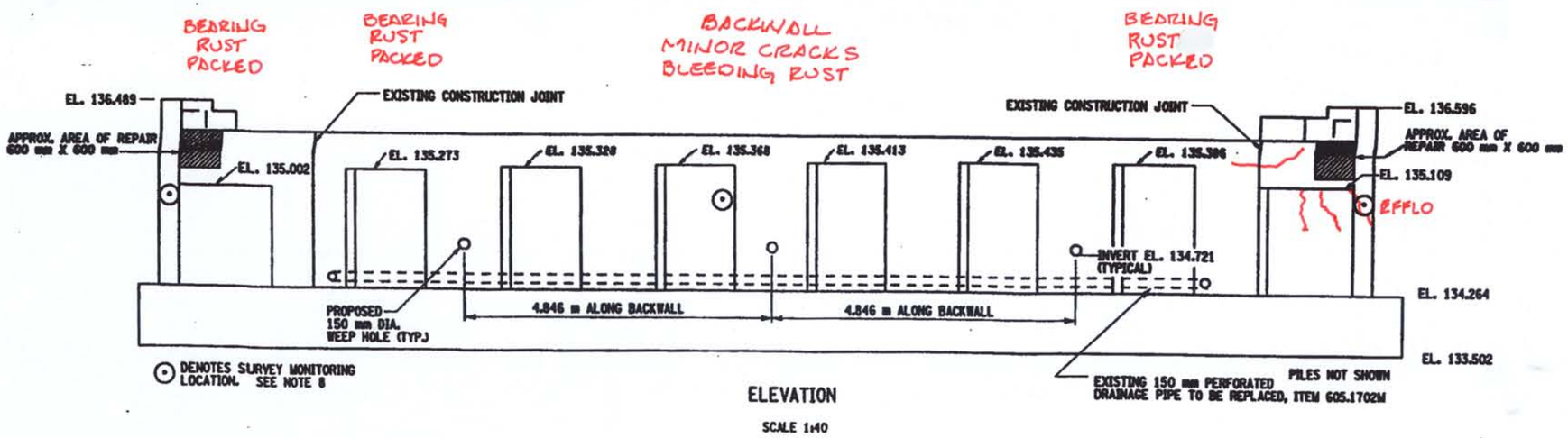

ELEVATION
SCALE 1:40

LEGEND

- C-X — CORE LOCATION
- XX — PHOTO LOCATION
- DELAMINATION
- SPALLING
- CRACK
- MAP CRACKING
- MOISTURE
- NP-X — NORTH ABUTMENT PEDESTAL NO. X

ALL DIMENSIONS ARE IN mm UNLESS OTHERWISE NOTED

AS BUILT REVISIONS

SIGNATURE _____ DATE _____

INTERSTATE 481 SB
OVER
ROUTE 5
NORTH ABUTMENT

STATE OF NEW YORK
DEPARTMENT OF TRANSPORTATION

FILENAME | REGION | DATE | DRAWING NO.

DESIGNED BY _____ CHECKED BY _____
DRAFTED BY _____
ESTIMATED BY _____
JOB MANAGER _____
DESIGN SUPERVISOR _____

IN-DEPTH PHOTO DOCUMENTATION

C&S Engineers, Inc.
499 Col. Eileen Collins Blvd.
Syracuse, New York 13212
Phone: (315) 455-2000
Fax: (315) 455-9667
www.cscos.com

I-481 SB over NYS Routes 5 & 92 - BIN 1002131



DESCRIPTION: SOUTH ABUTMENT – PEDESTAL 3 – CONCRETE APPEARS IN GOOD CONDITION (TYPICAL)

PHOTO 1



DESCRIPTION: SOUTH ABUTMENT – PEDESTAL 5 – DELAMINATED CONCRETE UPPER RIGHT CORNER

PHOTO 2

C&S Engineers, Inc.
499 Col. Eileen Collins Blvd.
Syracuse, New York 13212
Phone: (315) 455-2000
Fax: (315) 455-9667
www.cscos.com

I-481 SB over NYS Routes 5 & 92 - BIN 1002131



DESCRIPTION: SOUTH ABUTMENT – BACKWALL – BETWEEN PEDESTALS 6 AND 7 – RUST AND MOISTURE STAINING

PHOTO 3



DESCRIPTION: SOUTH ABUTMENT – STEEL DECKING – BETWEEN PEDESTALS 1 AND 2 - TYPICAL

PHOTO 4

C&S Engineers, Inc.
499 Col. Eileen Collins Blvd.
Syracuse, New York 13212
Phone: (315) 455-2000
Fax: (315) 455-9667
www.cscos.com

I-481 SB over NYS Routes 5 & 92 - BIN 1002131



DESCRIPTION: SOUTH ABUTMENT – PEDESTAL 1 – BEARING - RUST SCALE

PHOTO 5



DESCRIPTION: SOUTH ABUTMENT – PEDESTAL 6 – BEARING – RUST SCALE

PHOTO 6

C&S Engineers, Inc.
499 Col. Eileen Collins Blvd.
Syracuse, New York 13212
Phone: (315) 455-2000
Fax: (315) 455-9667
www.cscos.com

I-481 SB over NYS Routes 5 & 92 - BIN 1002131



DESCRIPTION: PIER 1 – COLUMN 4 – WEST FACE – DELAMINATED CONCRETE

PHOTO 7



DESCRIPTION: PIER 1 – CAP BEAM – SOUTH FACE – BELOW PEDESTAL 2 – SPALLING CONCRETE

PHOTO 8

C&S Engineers, Inc.
499 Col. Eileen Collins Blvd.
Syracuse, New York 13212
Phone: (315) 455-2000
Fax: (315) 455-9667
www.cscos.com

I-481 SB over NYS Routes 5 & 92 - BIN 1002131



DESCRIPTION: PIER 1 – CAP BEAM – SOUTH FACE – BELOW PEDESTAL 2 – SPALLING CONCRETE

PHOTO 9



DESCRIPTION: PIER 1 – CAP BEAM – FACING NORTH – BETWEEN PEDESTALS 4 AND 5 – CRACK ON UNDERSIDE

PHOTO 10

C&S Engineers, Inc.
499 Col. Eileen Collins Blvd.
Syracuse, New York 13212
Phone: (315) 455-2000
Fax: (315) 455-9667
www.cscos.com

I-481 SB over NYS Routes 5 & 92 - BIN 1002131



DESCRIPTION: PIER 1 – CAP BEAM – FACING NORTH – BETWEEN PEDESTALS 4 AND 5 – CRACK ON UNDERSIDE

PHOTO 11



DESCRIPTION: PIER 1 – PEDESTAL 7 – FACING SOUTH – TYPICAL CONDITION

PHOTO 12

C&S Engineers, Inc.
499 Col. Eileen Collins Blvd.
Syracuse, New York 13212
Phone: (315) 455-2000
Fax: (315) 455-9667
www.cscos.com

I-481 SB over NYS Routes 5 & 92 - BIN 1002131



DESCRIPTION: PIER 1 – PEDESTAL 1 – FACING SOUTH – BEARING – TYPICAL CONDITION

PHOTO 13



DESCRIPTION: STEEL STRUCTURE – AT PIER 1 FACING NORTH – BAY 2 – TYPICAL CONDITION

PHOTO 14

C&S Engineers, Inc.
499 Col. Eileen Collins Blvd.
Syracuse, New York 13212
Phone: (315) 455-2000
Fax: (315) 455-9667
www.cscos.com

I-481 SB over NYS Routes 5 & 92 - BIN 1002131



DESCRIPTION: PIER 2 – CAP BEAM – BETWEEN PEDESTALS 6 AND 7 FACING NORTH – CONCRETE SPALL

PHOTO 15



DESCRIPTION: PIER 2 – CAP BEAM – UNDER PEDESTAL 4 FACING NORTH – TYPICAL CONCRETE CONDITION

PHOTO 16

C&S Engineers, Inc.
499 Col. Eileen Collins Blvd.
Syracuse, New York 13212
Phone: (315) 455-2000
Fax: (315) 455-9667
www.cscos.com

I-481 SB over NYS Routes 5 & 92 - BIN 1002131



DESCRIPTION: PIER 2 – PEDESTAL 3 – BEARING – TYPICAL RUST

PHOTO 17



DESCRIPTION: PIER 2 – NORTH FACE – BETWEEN COLUMNS 2 AND 3

PHOTO 18

C&S Engineers, Inc.
499 Col. Eileen Collins Blvd.
Syracuse, New York 13212
Phone: (315) 455-2000
Fax: (315) 455-9667
www.cscos.com

I-481 SB over NYS Routes 5 & 92 - BIN 1002131



DESCRIPTION: STEEL CONNECTION – PIER 2 AT PEDESTAL 1 - TYPICAL

PHOTO 19



DESCRIPTION: STEEL STRUCTURE – BAY 4 FACING SOUTH – TYPICAL RUST

PHOTO 20

C&S Engineers, Inc.
499 Col. Eileen Collins Blvd.
Syracuse, New York 13212
Phone: (315) 455-2000
Fax: (315) 455-9667
www.cscos.com

I-481 SB over NYS Routes 5 & 92 - BIN 1002131



DESCRIPTION: NORTH ABUTMENT – PEDESTAL 1 – BACKWALL – CONCRETE SPALL

PHOTO 21



DESCRIPTION: NORTH ABUTMENT – BETWEEN PEDESTALS 7 AND 8 – BACKWALL – RUST AND MOISTURE STAINING

PHOTO 22

C&S Engineers, Inc.
499 Col. Eileen Collins Blvd.
Syracuse, New York 13212
Phone: (315) 455-2000
Fax: (315) 455-9667
www.cscos.com

I-481 SB over NYS Routes 5 & 92 - BIN 1002131



DESCRIPTION: NORTH ABUTMENT – BETWEEN PEDESTALS 6 AND5– BACKWALL – TYPICAL CONCRETE CONDITION

PHOTO 23



DESCRIPTION: NORTH ABUTMENT – BEARING 7 – HEAVY RUST SCALE

PHOTO 24

C&S Engineers, Inc.
499 Col. Eileen Collins Blvd.
Syracuse, New York 13212
Phone: (315) 455-2000
Fax: (315) 455-9667
www.cscos.com

I-481 SB over NYS Routes 5 & 92 - BIN 1002131



DESCRIPTION: NORTH ABUTMENT – BEARING 8 – HEAVY RUST SCALE

PHOTO 25



DESCRIPTION: NORTH ABUTMENT – BETWEEN PEDESTALS 5 AND 6 – DECK JOINT – RIGID FOAM INSULATION USED AS FILLER

PHOTO 26

C&S Engineers, Inc.
499 Col. Eileen Collins Blvd.
Syracuse, New York 13212
Phone: (315) 455-2000
Fax: (315) 455-9667
www.cscos.com

I-481 SB over NYS Routes 5 & 92 - BIN 1002131



DESCRIPTION: BRIDGE DECK – FACING NORTH

PHOTO 27



DESCRIPTION: SOUTH ABUTMENT – FACING SOUTH

PHOTO 28

C&S Engineers, Inc.
499 Col. Eileen Collins Blvd.
Syracuse, New York 13212
Phone: (315) 455-2000
Fax: (315) 455-9667
www.cscos.com

I-481 SB over NYS Routes 5 & 92 - BIN 1002131



DESCRIPTION: PIER 1 – FACING SOUTH

PHOTO 29



DESCRIPTION: PIER 2 – FACING NORTH

PHOTO 30

C&S Engineers, Inc.
499 Col. Eileen Collins Blvd.
Syracuse, New York 13212
Phone: (315) 455-2000
Fax: (315) 455-9667
www.cscos.com

I-481 SB over NYS Routes 5 & 92 - BIN 1002131



DESCRIPTION: NORTH ABUTMENT – FACING NORTH

PHOTO 31



DESCRIPTION: GENERAL ELEVATION – FACING EAST

PHOTO 32

1002131

PHOTO LOG MAP

LEGEND

XX PHOTO LOCATION

XX HIDDEN PHOTO LOCATION

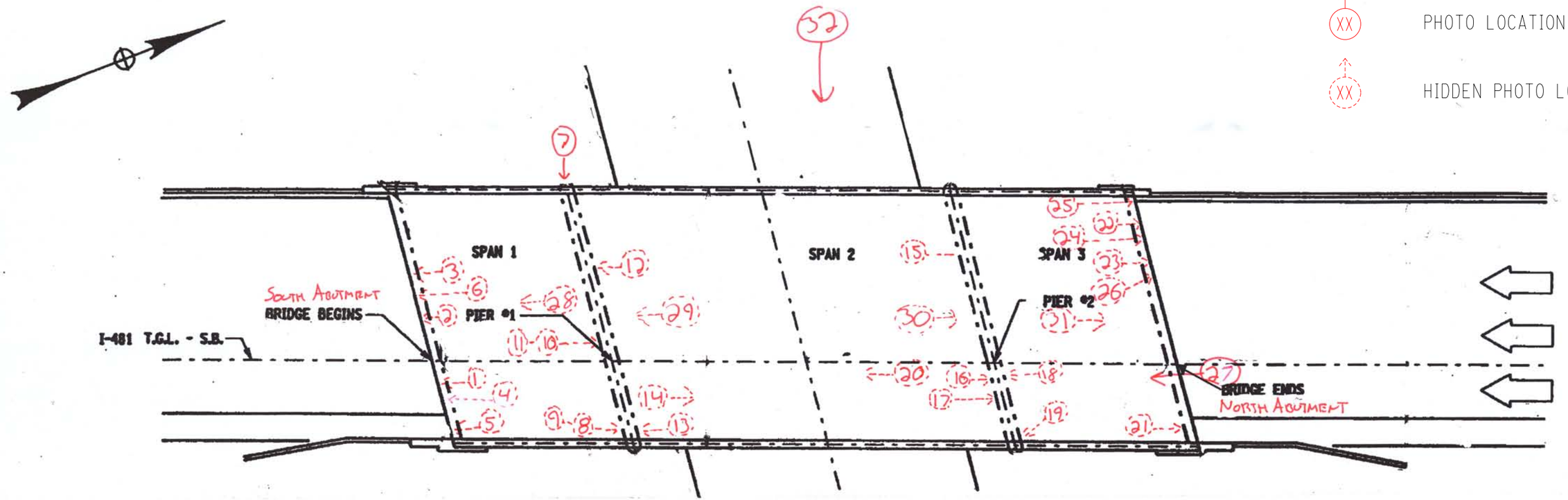

ASBESTOS DOCUMENTATION

ASBESTOS DOCUMENTATION FROM WATTS ARCHITECTURE & ENGINEERING, INC.

(WILL REPLACE BIN FOLDER ASBESTOS REPORT UPON COMPLETION)

Asbestos Sampling Survey

Location:
BIN 1-00213-1
Interstate Route 481 South Bound over Route 5

Prepared for:
New York State
Department of Transportation

PIN 3803.99.101

LaBella Project No. 97132

March, 1998

Table of Contents

Page

I. Project Summary 1

II. Site Description 1

III. Inspection Procedures 1

IV. Results 2

Certification 2

Figures and Table

I. Project Summary

In accordance with conditions of Term Agreement D010010, LaBella Associates, P.C. conducted an asbestos sampling survey of the Interstate Route 481 South Bound Bridge over Route 5. Based on laboratory analyses of bulk samples collected, the following material was determined to contain asbestos:

BIN 1-00213-1 Interstate Route 481 South Bound over Route 5

Type of Material	Estimated Amount
Sheet Packing	11.1 Square Meters

II. Site Description

The Site is located in Onondaga County, New York. For the purpose of this report, the Site consists of the Interstate Route 481 South Bound Bridge over Route 5 (See attached FIGURE 1 - Site Location Map).

III. Inspection Procedures

The following procedures were used to obtain the data for this Report:

A. A review of record drawings supplied by Region 3 personnel and a visual inspection of the subject structure were conducted to identify potential visible/accessible sources of asbestos-containing materials. Observations and notes were made to provide a description of the structure, and an estimate of the approximate amount, length, or area of ACM present.

B. Physical or operational constraints which might affect the removal of the ACM were identified and reported.

C. Bulk samples of suspected ACM were collected during the site inspection of the subject structure. Samples were taken from each homogeneous area that may contain ACM.

D. Samples were submitted for analysis. Preliminary PLM analyses of NOB materials were performed by LaBella Laboratories, a NYSDOH approved laboratory, to determine the presence and percentage of asbestos in each sample. TEM analyses of NOB materials, if necessary, were performed by EMSL Analytical, Inc. or New York Testing Laboratories, Inc.

E. Lab results were used to determine the approximate location, type, and amount of the verified ACM.

F. A drawing of the structure at the Site was created, in order to show sample locations and the approximate locations and amounts of confirmed ACM observed in accessible locations.

Only accessible areas were inspected. Inaccessible areas, such as areas within the bridge or the approaches to the bridge were not included in this inspection. No investigation was conducted by LaBella Associates to determine the presence of underground utilities on or in the immediate vicinity of the Site. Actual sample locations are shown in the attached FIGURE 2. Results of bulk sample analyses are tabulated in the attached TABLE.

IV. Results

BIN 1-00213-1 Interstate Route 481 South Bound over Route 5

Sheet Packing

Asbestos-containing sheet packing is located between the tops of the abutments and the deck slabs at both ends of the bridge. Most of this material is presently covered by the bridge deck, although the edges of this sheet packing are exposed and visible at various locations.

It is estimated that the total amount of this asbestos-containing sheet packing material on the bridge is approximately 11.1 square meters. This estimate is based on field measurements taken at the time of the site visit. The approximate locations of this asbestos-containing sheet packing are shown in FIGURE 2.

Certification

LaBella Associates, P.C. certifies the accuracy of this report, to the best of our knowledge, based on the information collected as described in the Inspection Procedures Section of this investigation.

Figures & Table

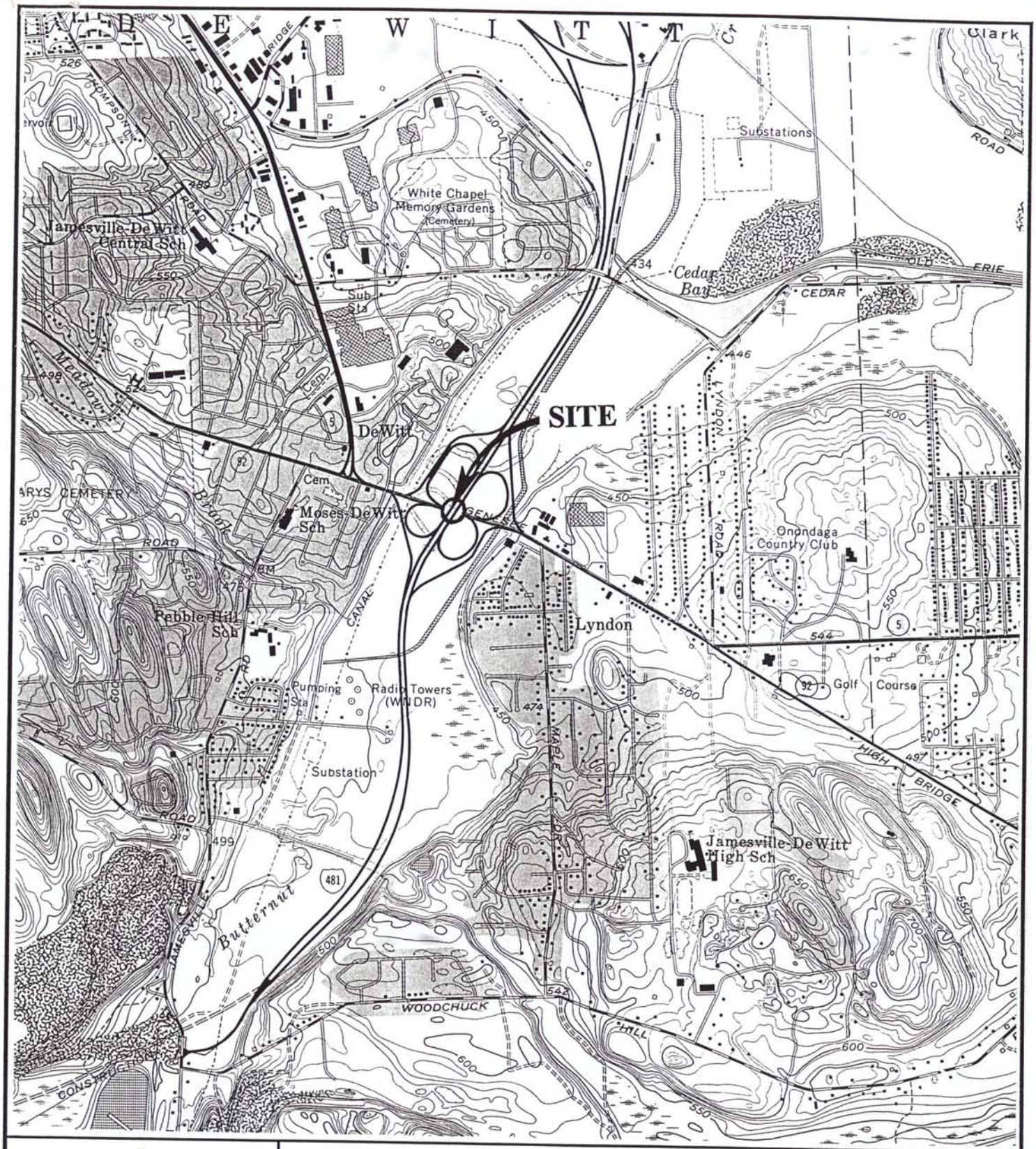

FIGURE 1
Site Location Map

I-481 SB OVER
ROUTE 5

BIN 1-00213-1

LABELLA

PROJECT NO. 97132

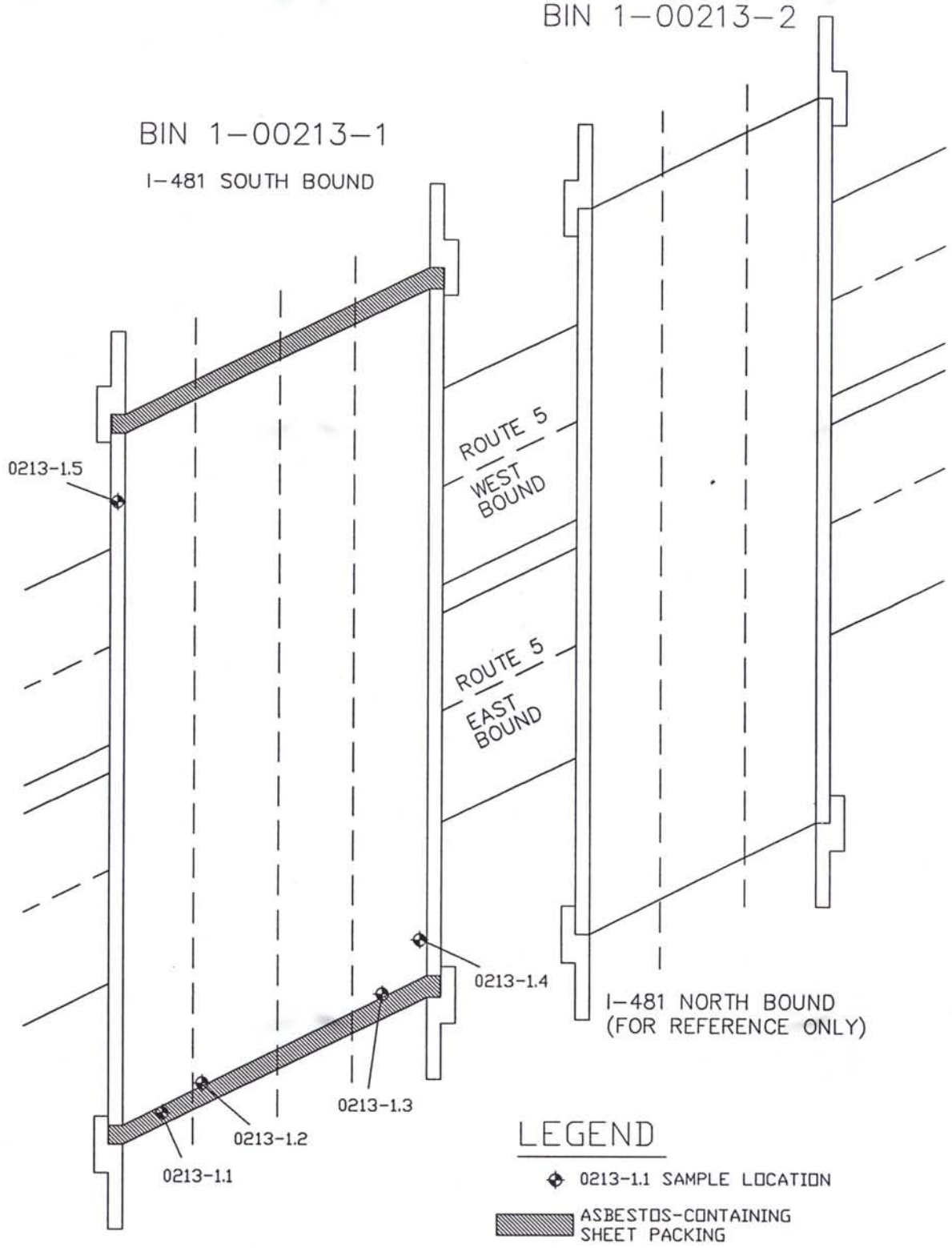

NORTH

PROJECT TITLE: ASBESTOS SAMPLING SURVEY 14 BRIDGES, VARIOUS COUNTIES, NEW YORK	PROJECT NO. 97132 PIN 3803.99.101
FIGURE 2 : I-481 SOUTH BOUND OVER ROUTE 5 BIN 1-00213-1 SAMPLE LOCATIONS AND CONFIRMED ACM	NOT TO SCALE DATE: MARCH, 1998

Bulk Sample Results Table

Asbestos Sampling Survey
BIN 1-00213-1
Interstate Route 481 South Bound over Route 5
Onondaga County, New York
LaBella Project # 97132
PIN 3803.99.101

Sample #	Sample Location	Type of Material	Results % Asbestos	Amount of Material	Specification Item No.
0213-1.1	**South End of Bridge Between Deck & Abutment**	**Sheet Packing**	**40% Chrysotile**	**11.1 Square Meters**	**15202.0627M**
0213-1.2	South End of Bridge Beneath Bearing	Bearing Pad	None Detected	N/A	N/A
0213-1.3	South End of Bridge on I-Beam	Green Paint	None Detected	N/A	N/A
0213-1.4	South End of Bridge on Pedestal	Masonry Coating	None Detected	N/A	N/A
0213-1.5	North End of Bridge in Expansion Joint	Gray Caulking	None Detected	N/A	N/A

NEW YORK STATE
DEPARTMENT OF TRANSPORTATION
D031085 P.I.N 3501.60

LEVEL 1 LOAD RATING
B.I.N. 1002131
I-481 Southbound over NYS Routes 5 & 92

LOAD RATING SUMMARY TABLE (LOAD FACTOR)					
CONTROLLING MEMBER	**CONTROLLING PARAMETER**	**LIVE LOAD**	**LIVE LOAD TYPE**	**INVENTORY RATING**	**OPERATING RATING**
(S2/ G8) FASCIA GIRDER	SERVICE	HS20-44	Axle Load	HS 26.12 (47.01 TONS)	HS 43.62 (78.5 TONS)
(S3/ G2) INTERIOR GIRDER	SERVICE	ALTERNATE MILITARY LOADING	Axle Load	1.581 (37.95 TONS)	2.641 (63.39 TONS)

DOES NOT INCLUDE FUTURE WEARING COURSE

ANALYSIS METHOD:LOAD FACTOR

RECOMMENDED POSTING AS-IS CONDITION: _____ Tons __X__ None

CALCULATED BY:

STATE OF NEW YORK CHARLES P. BROOKS III 089275 LICENSED PROFESSIONAL ENGINEER

DATE: 4/1/14

QUALITY ASSURANCE BY:

STATE OF NEW YORK PAUL F. BYRNE 055928 LICENSED PROFESSIONAL ENGINEER

DATE: 5/09/14

C&S COMPANIES

499 Col. Eileen Collins Blvd.
Syracuse, NY 13212
phone 315-455-2000
fax 315-455-9667
www.cscos.com

ENGINEERS
DESIGN BUILD
TECHNICAL RESOURCES
OPERATIONS

C&S Engineers, Inc.
Syracuse Hancock International Airport
Syracuse, NY 13212
phone 315-455-2000
fax 315-455-9667
www.cscos.com

TECHNICAL MEMORANDUM

TO: FILE (190.514.001)

FROM: JESSICA S. BAUER, P.E
NYSPE 084915

DATE: FEBRUARY 10, 2014

C&S PROJECT NO.: 190.514.001

RE: SEISMIC ASSESSMENT SUMMARY
NEW YORK STATE DEPARTMENT OF TRANSPORTATION
D031085; PIN 3501.60; I-81

BIN: 1002131 Seismic Assessment

This memorandum summarizes the seismic assessment conducted for BIN 1002131 as part of the Interstate 81 Project in Syracuse, NY. The purpose of the assessment is to determine if seismic retrofits are warranted at the superstructure to substructure connection, and if further seismic evaluation of the structure is required. This memorandum will give the assessment results, retrofits required and recommendations for further seismic evaluation of the structure.

ASSESSMENT PROCEDURE

The seismic assessment was performed in accordance with the FHWA Seismic Retrofitting Manual for Highway Structures: Part 1 - Bridges, January 2006. As per the referenced manual, seismic assessment was performed for both lower level and upper level earthquake ground motion. The lower level earthquake ground motion has a reasonable likelihood of occurrence within the life of the bridge (50% probability of exceedance within a 75 year bridge life). The upper level earthquake ground motion has a finite likelihood of occurrence within the life of the bridge (7% probability of exceedance within a 75 year bridge life).

Values for the spectral acceleration for the Syracuse area used in the assessment are as follows:

- Lower Level Earthquake Ground Motion for a Short Period (0.2 seconds): $S_S = 0.0251$
- Lower Level Earthquake Ground Motion for a Long Period (1.0 seconds): $S_1 = 0.0076$
- Upper Level Earthquake Ground Motion for a Short Period (0.2 seconds): $S_S = 0.139$
- Upper Level Earthquake Ground Motion for a Long Period (1.0 seconds): $S_1 = 0.047$

These values are considered constant and are the same for all seismic assessments of bridges in the Syracuse area.

The Site Class is based on the soil conditions at the bridge location. It was determined that this parameter has little effect on the results of the seismic assessment because the spectral

You created this PDF from an application that is not licensed to print to novaPDF printer (http://www.novapdf.com)

acceleration values for the Syracuse area are small. Based on this, a site class of D was used for all seismic assessments of bridges in the Syracuse area.

Bridge parameters used in the seismic assessment were retrieved from the record drawings and WinBolts data.

The seismic assessment takes into account the anticipated service life, importance, and the seismic exposure of the bridge to determine a seismic retrofit category (SRC). The SRC is then used to determine seismic evaluation methods and retrofit measures. There are four SRCs, A through D. Seismic retrofit category A is the lowest category; bridges in this category do not require retrofits or further seismic evaluation. Seismic retrofit category D is the highest category; bridges in this category requiring the most rigorous seismic evaluations and retrofits.

ASSESSMENT RESULTS

The SRC for the bridge is "**C**" for lower level earthquake ground motion and "**B**" for upper level earthquake ground motion.

RETROFITS REQUIRED

Bearing replacements and seat width improvements are not required at the abutments or piers. Additional retrofits may be required if further seismic evaluation is needed.

RECOMMENDATIONS FOR FURTHER SEISMIC EVALUATION

For the lower level earthquake ground motion, it is recommended that capacity/demand ratios for bridge components are calculated as per Section 5.4 of the referenced manual. For the upper level earthquake ground motion, it is recommended that the capacities of the bearings are checked as per Section 5.2 of the referenced manual.

Retrofit cost estimates will be provided after any further required seismic evaluations are completed.

You created this PDF from an application that is not licensed to print to novaPDF printer (http://www.novapdf.com)

ENGINEERS
DESIGN BUILD
TECHNICAL RESOURCES
OPERATIONS

C&S Engineers, Inc.
Syracuse Hancock International Airport
Syracuse, NY 13212
phone 315-455-2000
fax 315-455-9667
www.cscos.com

TECHNICAL MEMORANDUM

TO: **FILE (190.514.001)**

FROM: **JESSICA S. BAUER, P.E.**
NYSPE 084915

DATE: **MAY 21, 2014**

C&S PROJECT NO.: 190.514.001

RE: **NEW YORK STATE DEPARTMENT OF TRANSPORTATION**
D031085; PIN 3501.60; I-81 Opportunities, BIN 1002131 Fatigue Evaluation

---

This memorandum documents a fatigue evaluation conducted for the existing Interstate 81 Viaduct Project. Existing structures with AASHTO Category D, E, and E' fatigue-prone details require 100% hands-on inspection unless proven to be exempt. The purpose of the evaluation is to assess the remaining life of fatigue-prone components.

EVALUATION PROCEDURES

The fatigue evaluation was performed in accordance with the AASHTO Guide Specification for Fatigue Evaluations of Existing Steel Bridges, 1990. Fatigue-prone welds identified in the biennial inspection reports were located on record drawings and confirmed visually in the field. Additional information concerning fatigue-prone welds located in BIN folders was also obtained and reviewed prior to inspection.

EVALUATION RESULTS

The results of the fatigue evaluation of the existing bridge are shown below. The remaining safe fatigue life of the fatigue components have been **exhausted**.

Fatigue Detail Location	Remaining Safe Fatigue Life (Years)	Remaining Mean Fatigue Life (Years)
Span 1, Interior Girders, End of Bottom Flange Cover Plate	-18.88	-0.29
Span 2, Exterior Girders, End of Bottom Flange Cover Plate	-17.51	6.46
Span 2, Interior Girders, End of Bottom Flange Cover Plate	-13.08	28.26
Span 3, Interior Girders, End of Bottom Flange Cover Plate	-18.96	-0.65

E. Recommendations:

The purpose of this deck evaluation is to document and determine existing conditions of the deck. It will be used as a tool for developing the scope of work and cost estimates for the development and comparison of alternatives for the overall project.

The total damaged area is less than 1% of the total deck area. Due to the age, condition and high chloride-ion content of the bridge deck concrete, the bridge deck should be rehabilitated or replaced to meet current standards and to mitigate excessive future maintenance costs.

Option 1 – Scarify and Bridge Deck Overlay

The maximum service life this option would provide is 25 years. The design life of this project is 30 years (ETC +30). This option does not meet the project objectives of obtaining 30+ years of service life.

Option 2 – Bridge Deck Rehabilitation with 100% Deep Removal

This option will involve partial depth reconstruction with top mat rebar exposure of the entire bridge deck to remove the chloride contaminated concrete (100% deep removal). The existing bridge deck thickness is 7 ½" with 1 ½" of concrete cover over the top mat of reinforcing. The proposed partial depth reconstruction will include the addition of 2" of concrete to provide the standard of 9 ½" bridge deck thickness. The existing top mat of reinforcing bars will be removed and replaced to accommodate the standard 3" cover of concrete. The existing non-conforming bridge railing will be removed and replaced with single-slope concrete barrier. The existing armor bridge joints will be replaced with armorless bridge joints. The Level 1 Load Rating for the final condition was found to be acceptable. This option would provide a service life of 35 years to the bridge deck. The construction cost of this option is $ 0.712 million.

Option 3 – Bridge Deck Replacement with Cast-In-Place Concrete

This option will involve the complete demolition of the existing bridge deck, railing and bridge deck joints. The bridge deck will be replaced with a new concrete deck, new single-slope concrete barrier and new armorless bridge joints. The new bridge deck would be 9 ½" standard thickness as compared to the 7 ½" existing thickness. The Level 1 Load Rating for the final condition was found to be acceptable. This option would provide a service life of 40 years to the bridge deck. The construction cost of this option is $ 0.888 million.

Option 4 – Bridge Deck Replacement with Pre-cast Concrete Deck Panels

This option will have the highest construction cost of all of the options however; traffic control costs may be lower due to reduced construction time. Comparison of accelerated construction to conventional construction is beyond the scope of work for this project at this time.

IN-DEPTH INSPECTION REPORT

D031085 P.I.N. 3501.60

B.I.N. 1002132

TEAM LEADER Andrew J. Fuller, P.E. 59848
NYSPE LICENSE #

ASSISTANT TEAM LEADER Jeffrey M. Reina, P.E.
ASSISTANT TEAM LEADER Logan Bessel
ASSISTANT TEAM LEADER Jerome Getter

FEATURE CARRIED I - 481 Northbound
FEATURE CROSSED NYS Routes 5 & 92

DATE FIELD WORK BEGAN December 18, 2013
DATE FIELD WORK COMPLETED December 19, 2013

TABLE OF CONTENTS

- TP 349 & 350
- IN-DEPTH CONDITION DOCUMENTATION
- IN-DEPTH PHOTO DOCUMENTATION
- ASBESTOS REPORT

TP 349 & TP 350

BRIDGE ELEMENT RATINGS

Inspection Date: 10/2/2012 RC: 33 BIN: 1002132

Bridge Ratings

Carried: 481I 481I33012045 Crossed: 5 5 33083022 CheckValue: 1,810,512,270

Inspection Agency: 10 - NYSDOT Type of Inspection: 1 - BIENNIAL
GTMS: 302 -- Steel - Stringer/Multi-Beam or Girder
POSTINGS: See Gen Rec Page 1 for Postings at time of inspection.
Further Investigation Needed: Suggest that deck have further invest. and thermal camera.
State Highway Number: 61-17 Milepoint: 5.12 AADT/Yr: 16412 / 2010
Orientation: 2 - Northeast Political Unit: 0233 - Town of DEWITT Year Built: 1963
Total Spans: 3 Ramp Bridge Attached To Span: NA BIN: NA
General Recommendation: 4 Computed Condition Rating: 4.156

Abutment Ratings:	**Beg Abut**	**End Abut**
Joint with Deck	5	5
Bearings, Bolts, Pads	3	5
Seats and Pedestals	5	4
Backwall	5	5
Stem (Breastwall)	8	8
Erosion or Scour	5	5
Footings	9	9
Piles	9	9
Recommendation	5	5

Wingwall Ratings:	**Beg Abut**	**End Abut**
Walls	5	5
Footings	9	9
Erosion or Scour	6	6
Piles	9	9

Channel Ratings:	**Channel**
Stream Alignment	8
Erosion and Scour	8
Waterway Opening	8
Bank Protection	8

Approach Ratings:	**Approaches**
Drainage	4
Embankment	6
Settlement	5
Erosion	5
Pavement	3
Guide Railing	4

Number of Flags Issued:

RED: 0 Yellow: 0 Safety: 0

Vulnerability Reviews Recommended: 1=Yes, 2=No, 3=NA, X=NotActive

Hydraulic: 3	Overload: X	Steel: 2
Collision: 2	Concrete: X	Seismic: X

Inspector's Signature: CheckValue: 1,810,512,270 Date: 10/2/2012

David Hann,PE () (Inspector ID:3000055)

Signed copy of this inspection report is available in the appropriate NYSDOT Regional Office

Reviewed By: Date: 11/21/2012

James R. Manning,PE () (QC ID:3000023)

Signed copy of this inspection report is available in the appropriate NYSDOT Regional Office

Inspection Date: 10/2/2012 RC: 33 BIN: 1002132

Span Ratings

Carried: 481I 481I33012045 Crossed: 5 5 33083022 CheckValue: 1,810,512,270

Deck Element Ratings:	001	002	003
Wearing Surface	5	5	5
Curbs	5	5	5
Sidewalks, Fascias	4	4	4
Railings, Parapets	6	6	6
Scuppers	8	8	8
Gratings	8	8	8
Median	8	8	8
Mono Deck Surface	6	6	6

Superstructure Ratings:	001	002	003
Structural Deck	3	3	3
Primary Members	4	4	4
Secondary Members	5	5	5
Paint	4	4	4
Joints	5	5	8
Recommendation	4	4	4

Pier Ratings:	001	002	003
Bearings, Bolts, Pads	5	5	8
Pedestals	5	5	8
Top of Cap or Beam	4	4	8
Stem Solid Pier	8	8	8
Cap Beam	5	4	8
Pier Columns	4	4	8
Footings	9	9	8
Erosion or Scour	6	6	8
Piles	9	9	8
Recommendation	4	4	8

Utility Ratings:	001	002	003
Lighting	5	5	8
Sign Structure	8	3	8
Utilities and Support	8	8	8

Field Notes:

Field Date	Arrival	Departure	Temp (C)	Temp (F)	Weather Conditions
10/1/2012	8:00:00 AM	4:30:00 PM		60	Overcast
10/2/2012	7:30:00 AM	4:30:00 PM		60	Overcast

IN-DEPTH CONDITION DOCUMENTATION

IN DEPTH INSPECTION REPORT

BIN 1002132

Visual Inspection

Miscellaneous concrete and bearing repairs were made to the abutments and piers in 2002 under contract D259214.

Cracks, spalls, and other field observations are shown on the plans. Below is a brief summary of conditions for each feature.

Superstructure

Deck – Bridge Deck Evaluation not required. Deck Rating was less than 5.

Steel – See Structural Steel Inspection Summary

Bearings – Bearing elements typically have minor rust scale. Bearings on the outside pedestals have heavy rust scale.

Substructure

South Abutment – Concrete abutment, backwall, and pedestals contained minor isolated areas of delaminated concrete and cracking. There is minor rust and water staining on the back wall. Pedestal 5 contains delaminated concrete on the West face.

Pier 1 – The North and South faces of the concrete cap beam and the columns contained minor isolated areas of delaminated concrete and cracking. The pedestal concrete does not appear to be delaminated. Columns 1 and 3 contain areas of delaminated concrete.

Pier 2 – The North and South faces of the concrete cap beam and the columns contained areas of delaminated concrete and cracking. The pedestal concrete does not appear to be delaminated. Column 3 contains map cracking.

North Abutment – Concrete abutment and backwall contained minor isolated areas of delaminated concrete and cracking. There is minor rust and water staining on the back wall. Pedestals 2, 3, 4, 5, and 6 contain areas of delaminated concrete.

STRUCTURAL STEEL INSPECTION SUMMARY

BIN 1002132

Special Emphasis Inspection Required

Non-Redundant/Fracture Critical Members – No

Pin and Hangers – No

Fatigue-Prone Welds – Yes

Non-Categorized Fatigue-Prone Details – No

Other (Specified in Text) – No

Special Emphasis Details

100% hands on inspection of cover plates performed – no cracks found.

Overall Steel Condition

The steel showed no sign of major deterioration. There were no isolated pockets of major section loss and no areas of concern were observed.

Paint

Paint had started to fail along edges of girders and webs of fascia girders.

Section Loss

Due to the age of the steel a blanket 5% section loss should be used in load rating.

BIN 1002132

FED ROAD REG. NO.	STATE	CONTRACT NO.	SHEET NO.	TOTAL SHEETS
1	N.Y.	D259214	208	432

BRIDGE REHABILITATION PROJECT (ELEMENT SPECIFIC)
VARIOUS BRIDGES ON INTERSTATE 481
TOWNS OF DEWITT AND CICERO
ONONDAGA COUNTY
P.I.N. 305613 | B.I.N. 1002132

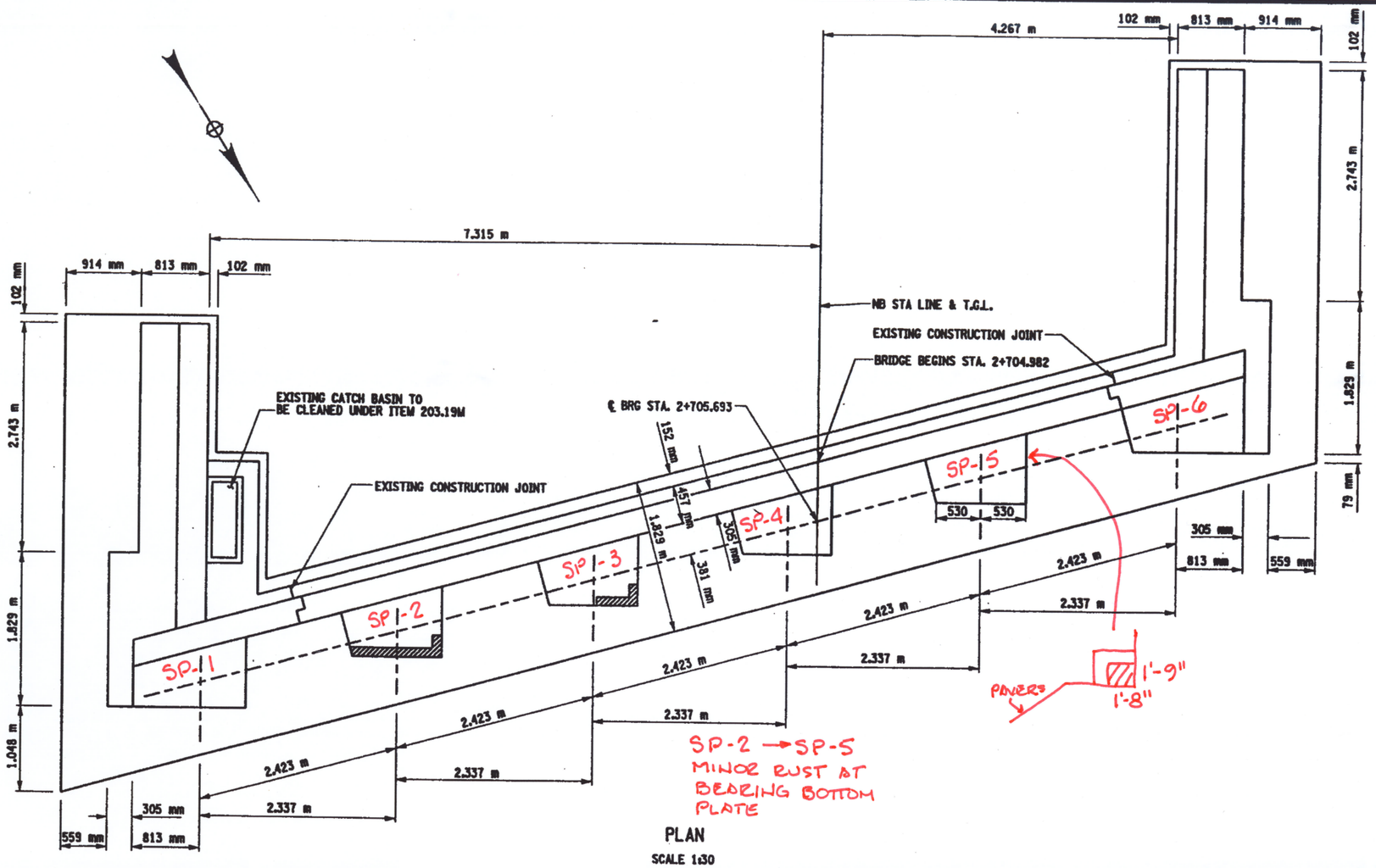

PLAN
SCALE 1:30

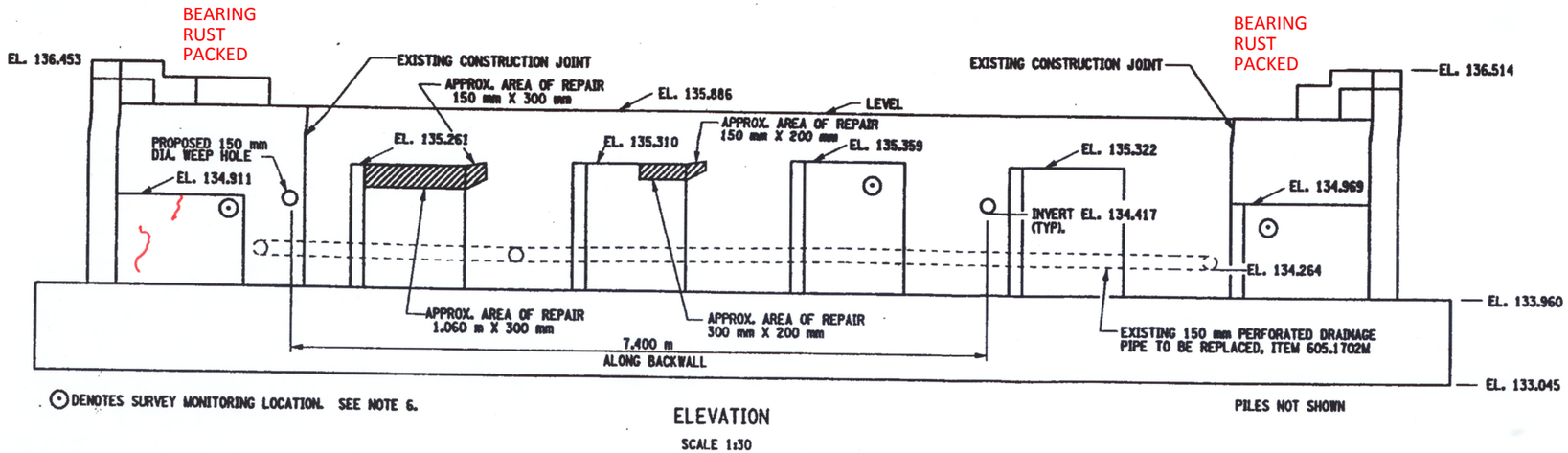

⊙ DENOTES SURVEY MONITORING LOCATION. SEE NOTE 6.

PILES NOT SHOWN

ELEVATION
SCALE 1:30

LEGEND

- C-X — CORE LOCATION
- XX — PHOTO LOCATION
- DELAMINATION
- SPALLING
- CRACK
- MAP CRACKING
- MOISTURE
- SP - X — SOUTH ABUTMENT PEDESTAL NO. X

LIST OF ITEMS USED:

ITEM 203.19M - CLEANING DRAINAGE STRUCTURES & MANHOLES (EA)
ITEM 582.05M - REMOVE STRUCTURAL CONC. WITH CLASS A CONC. (CM)
ITEM 605.1702M - OPT. UNDERDRAIN PIPE 150 mm ø (M)

ALL DIMENSIONS ARE IN mm UNLESS OTHERWISE NOTED

AS BUILT REVISIONS

SIGNATURE | DATE

INTERSTATE 481 NB
OVER
ROUTE 5
SOUTH ABUTMENT

STATE OF NEW YORK
DEPARTMENT OF TRANSPORTATION

FILENAME	REGION	DATE	DRAWING NO.
305613ALA1B	3	[illegible]	[illegible]

CHECKED BY ____ DRAFTED BY ____ ESTIMATED BY ____ CHECKED BY ____ DESIGNED BY ____ JOB MANAGER ____ DESIGN SUPERVISOR ____

FED ROAD REG. NO.	STATE	CONTRACT NO.	SHEET NO.	TOTAL SHEETS
1	N.Y.	D259214	220	432

BRIDGE REHABILITATION PROJECT (ELEMENT SPECIFIC)
VARIOUS BRIDGES ON INTERSTATE 481
TOWNS OF DEWITT AND CICERO
ONONDAGA COUNTY
P.I.N. 305613 | B.I.N. 1002132

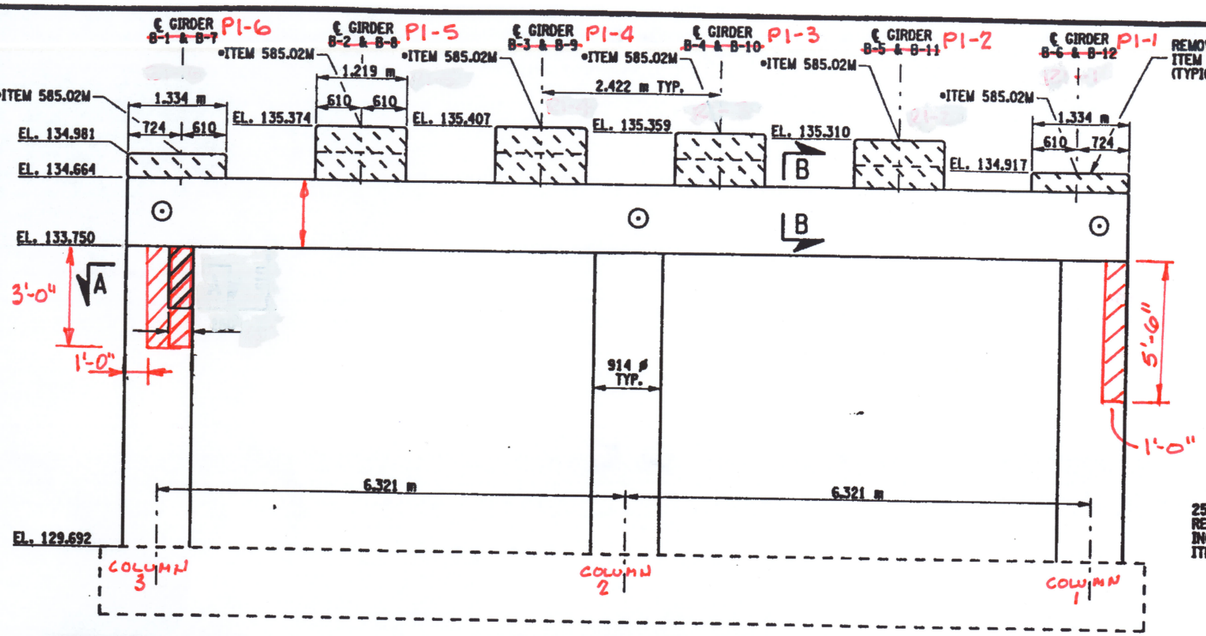

⊙ DENOTES APPROXIMATE SURVEY MONITORING LOCATIONS - SEE NOTE 7.

EXISTING PIER 1 ELEVATION FIXED END

SCALE: 1:40

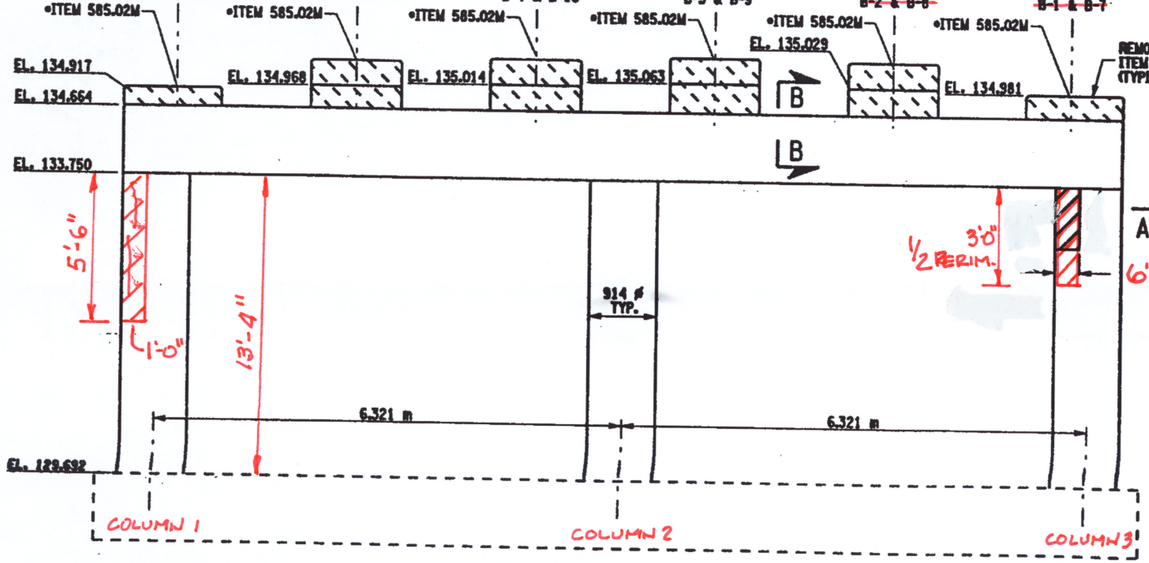

EXISTING PIER 1 ELEVATION EXPANSION END ROADSIDE

SCALE: 1:40

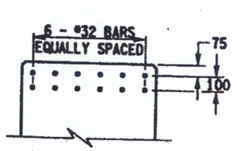

SECTION B-B
NOT TO SCALE

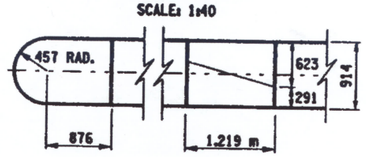

EXISTING PEDESTAL PLAN
NOT TO SCALE

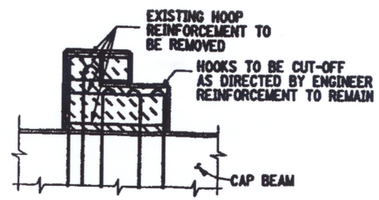

EXISTING PEDESTAL ELEVATION
NOT TO SCALE

THE CONTRACTOR SHALL ONLY REMOVE AND REPLACE CONCRETE ON ¼ OF THE CIRCUMFERENCE OF THE COLUMN SIMULTANEOUSLY, FOR THE FULL CURING PERIOD.

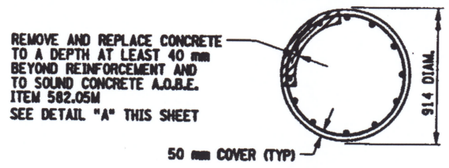

SECTION A-A
NOT TO SCALE

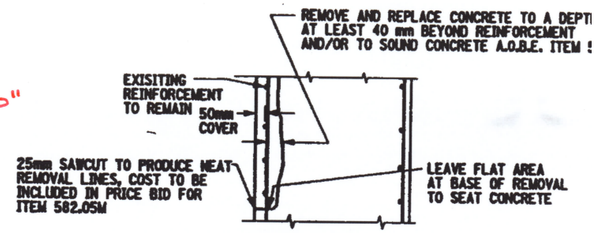

DETAIL A
NOT TO SCALE

LIMITS OF PAINT REMOVAL PRIOR TO WELD REMOVAL, AND RE-PAINTING ITEM 16570.76M AND ITEM 16570.32M (SEE PAINT REMOVAL NOTE, THIS SHEET)

PAINT REMOVAL LIMITS TO INCLUDE 100mm FROM WELD REMOVAL LOCATIONS ONLY.

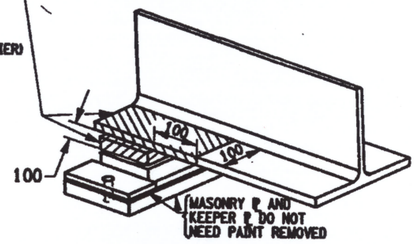

PAINT REMOVAL DETAIL
NOT TO SCALE

PAINT REMOVAL NOTE:

IN CONJUCTION WITH THE USE OF ITEM 16570.32M AND ITEM 16570.76M, ITEM 571.010004M - TREATMENT & DISPOSAL OF PAINT REMOVAL WASTE AND ITEM 570.090004M ENVIRONMENTAL GROUND PROTECTION, SHALL ALSO BE INCORPORATED DURING THE PAINT REMOVAL OPERATIONS.

TOP OF CAP BEAM & BEARING STEEL HVY COAT OF PIGEON DROPPINGS

LEGEND

- C-X — CORE LOCATION
- XX — PHOTO LOCATION
- DELAMINATION
- SPALLING
- CRACK
- MAP CRACKING
- MOISTURE
- P1-X — PIER ONE - PEDESTAL NO.

LIST OF ITEMS USED:

ITEM 16570.32M - LOCALIZED PAINTING OF BARE STRUCTURAL STEEL (SM)
ITEM 16570.76M - LOCALIZED VACUUM CONTAINED CLEANING - STRUCTURAL STEEL - IRREGULAR SURFACES (SM)
ITEM 571.010004M - TREATMENT AND DISPOSAL OF PAINT REMOVAL WASTE (CM)
ITEM 580.01M - REMOVAL OF STRUCTURAL CONCRETE (CM)
ITEM 582.05M - REMOVAL OF STRUCTURAL CONCRETE -REPLACE WITH CLASS A CONCRETE (CM)
ITEM 585.02M - STRUCTURAL LIFTING OPERATION TYPE B (EA)
ITEM 589.520004M - REMOVAL OF EXISTING STEEL (EA)
ITEM 570.090004M- ENVIRONMENTAL GROUND PROTECTION (LS)

AS BUILT REVISIONS

SIGNATURE DATE

INTERSTATE 481 NB
OVER
ROUTE 5
PIER 1
REMOVAL DETAILS

STATE OF NEW YORK
DEPARTMENT OF TRANSPORTATION

FILENAME | REGION | DATE | DRAWING NO

DESIGN SUPERVISOR — JOB MANAGER — DESIGNED BY — ESTIMATED BY — DRAFTED BY — CHECKED BY

FED ROAD REG. NO.	STATE	CONTRACT NO.	SHEET NO.	TOTAL SHEETS
1	N.Y.	D259214	221	432

BRIDGE REHABILITATION PROJECT (ELEMENT SPECIFIC)
VARIOUS BRIDGES ON INTERSTATE 481
TOWNS OF DEWITT AND CICERO
ONONDAGA COUNTY
P.I.N. 305613 | B.I.N. 1002132

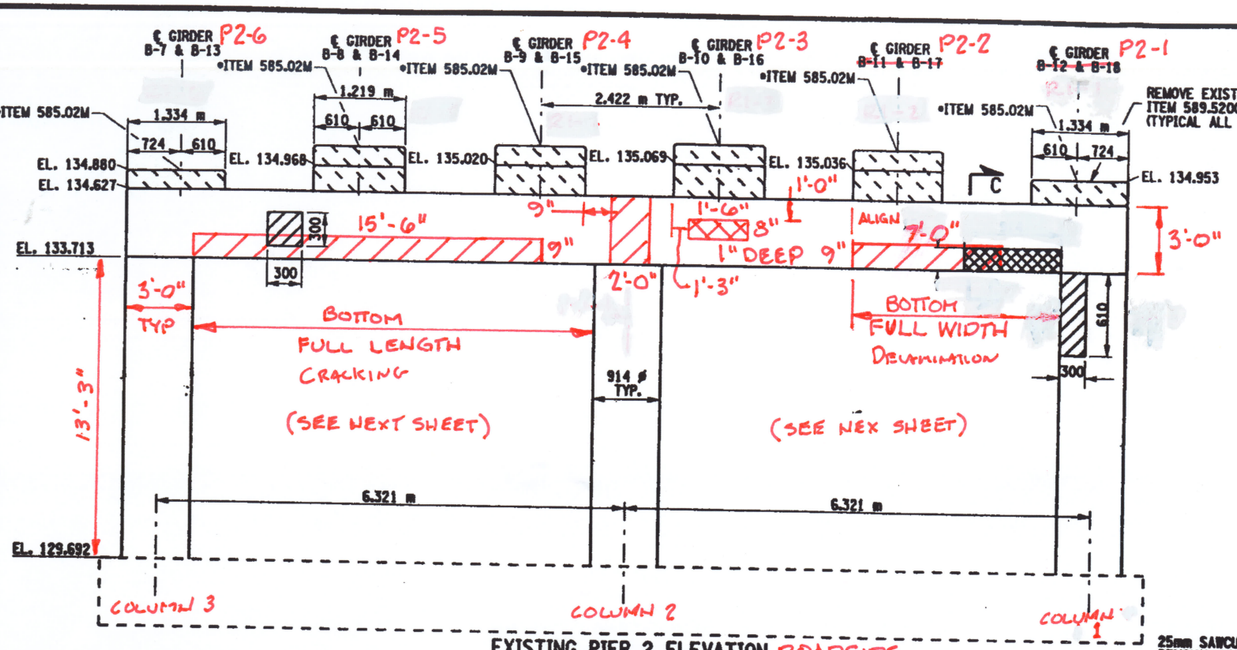

EXISTING PIER 2 ELEVATION ROADSIDE
FIXED END
SCALE: 1:40

THE CONTRACTOR SHALL ONLY REMOVE AND REPLACE CONCRETE ON ¼ OF THE CIRCUMFERENCE OF THE COLUMN SIMULTANEOUSLY, FOR THE FULL CURING PERIOD.

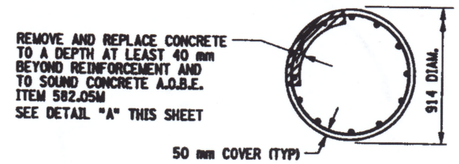

SECTION A-A
NOT TO SCALE

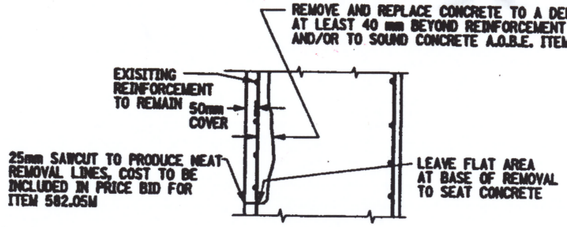

DETAIL A
NOT TO SCALE

LEGEND
- C-X — CORE LOCATION
- XX — PHOTO LOCATION
- DELAMINATION
- SPALLING
- CRACK
- MAP CRACKING
- MOISTURE
- P2 - X — PIER 2 PEDESTAL NO. X

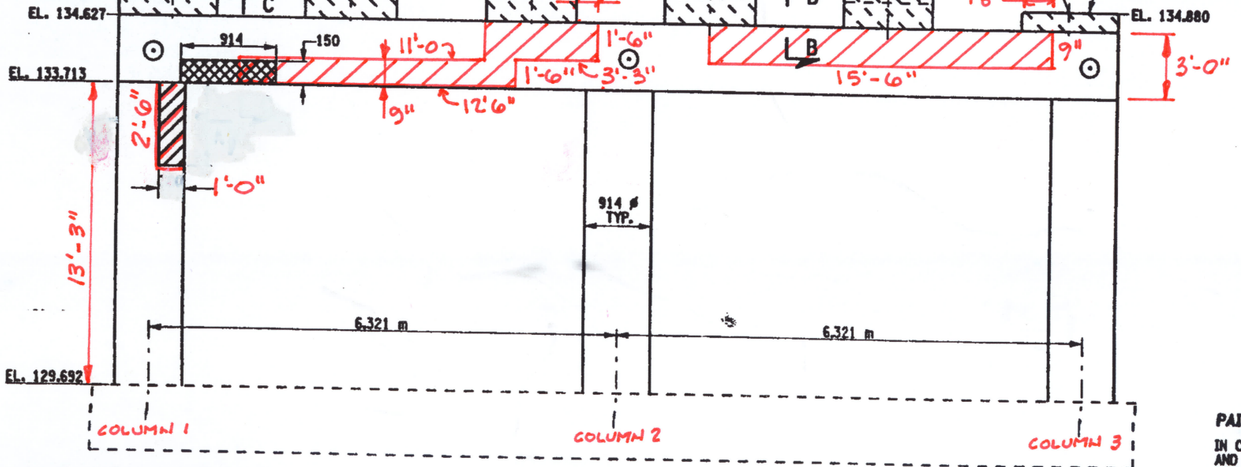

EXISTING PIER 2 ELEVATION EXPANSION END
SCALE: 1:40

LIMITS OF PAINT REMOVAL PRIOR TO WELD REMOVAL, AND RE-PAINTING ITEM 16570.76M AND ITEM 16570.32M. (SEE PAINT REMOVAL NOTE, THIS SHEET)

PAINT REMOVAL LIMITS TO INCLUDE 100mm FROM WELD REMOVAL LOCATIONS ONLY.

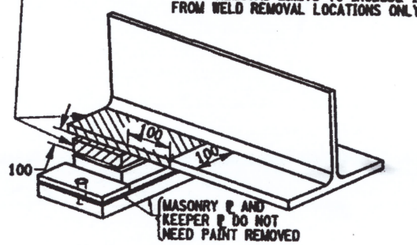

PAINT REMOVAL DETAIL
NOT TO SCALE

PAINT REMOVAL NOTE:

IN CONJUCTION WITH THE USE OF ITEM 16570.32M AND ITEM 16570.76M, ITEM 571.010004M - TREATMENT & DISPOSAL OF PAINT REMOVAL WASTE AND ITEM 570.090004M ENVIRONMENTAL GROUND PROTECTION, SHALL ALSO BE INCORPORATED DURING THE PAINT REMOVAL OPERATIONS.

⊙ DENOTES APPROXIMATE SURVEY MONITORING LOCATIONS - SEE NOTE 7.

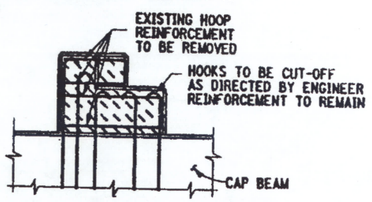

EXISTING PEDESTAL ELEVATION
NOT TO SCALE

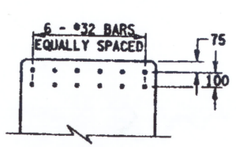

SECTION B-B
NOT TO SCALE

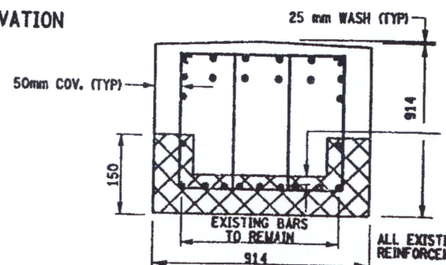

SECTION C-C
NOT TO SCALE

LIST OF ITEMS USED:

ITEM 570.090004M - ENVIRONMENTAL GROUND PROTECTION (LS)
ITEM 16570.32M - LOCALIZED PAINTING OF BARE STRUCTURAL STEEL (SM)
ITEM 16570.76M - LOCALIZED VACUUM CONTAINED CLEANING - STRUCTURAL STEEL - IRREGULAR SURFACES (SM)
ITEM 571.010004M - TREATMENT AND DISPOSAL OF PAINT REMOVAL WASTE (CM)
ITEM 580.01M - REMOVAL OF STRUCTURAL CONCRETE (CM)
ITEM 582.05M - REMOVAL OF STRUCTURAL CONCRETE -REPLACE WITH CLASS A CONCRETE (CM)
ITEM 582.07M - REMOVAL OF STRUCTURAL CONCRETE -REPLACE WITH VERTICAL OVER HEAD PATCH MATERIAL (SM)
ITEM 585.02M - STRUCTURAL LIFTING OPERATION TYPE B (EA)
ITEM 589.520004M - REMOVAL OF EXISTING STEEL (EA)

ALL DIMENSIONS ARE IN mm UNLESS OTHERWISE NOTED

AS BUILT REVISIONS

SIGNATURE DATE

INTERSTATE 481 NB
OVER
ROUTE 5
PIER 2
REMOVAL DETAILS

STATE OF NEW YORK
DEPARTMENT OF TRANSPORTATION

FILENAME	REGION	DATE	DRAWING NO.
305613AI_P2A	3	10/02	PR2-2

DESIGNED BY — DRAFTED BY — CHECKED BY — ESTIMATED BY — CHECKED BY — JOB MANAGER — DESIGN SUPERVISOR

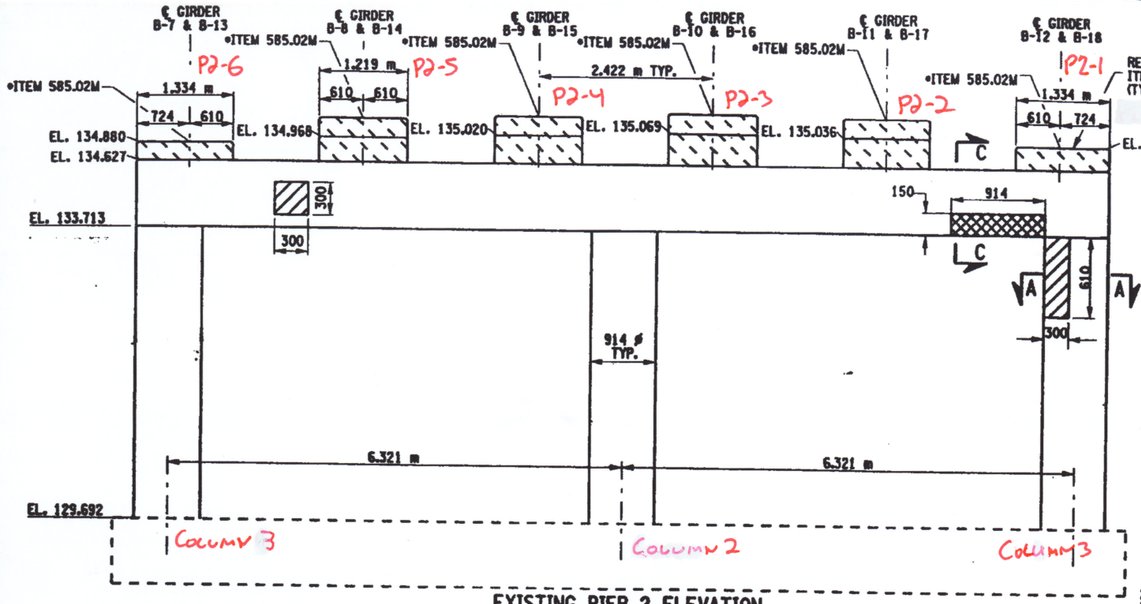

EXISTING PIER 2 ELEVATION
FIXED END
SCALE: 1:40

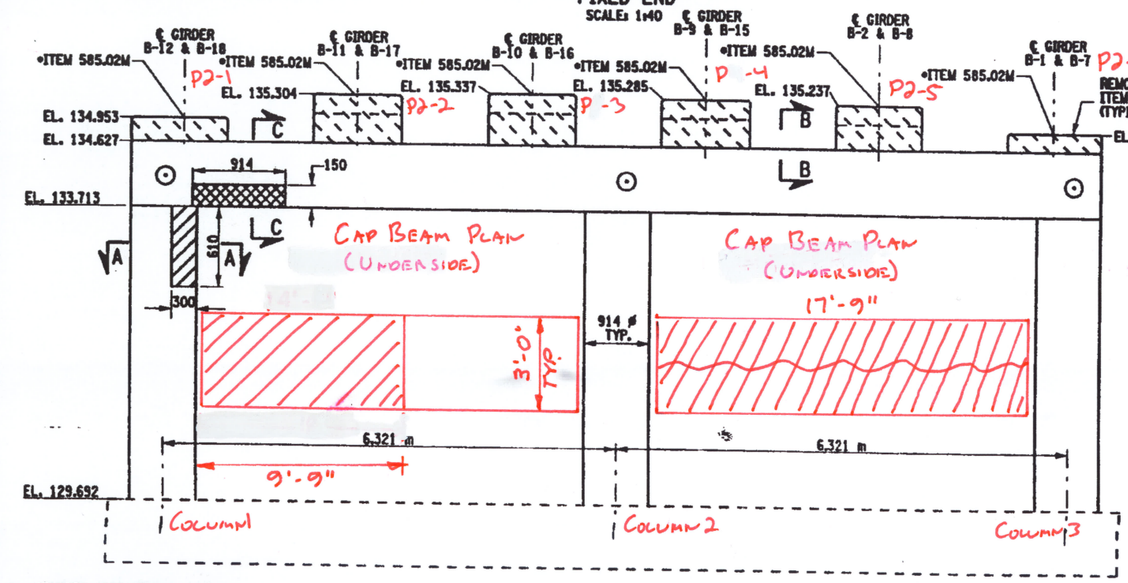

⊙ DENOTES APPROXIMATE SURVEY MONITORING LOCATIONS - SEE NOTE 7.

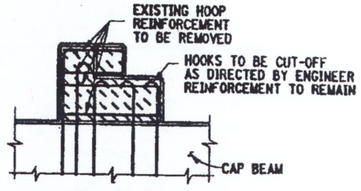

EXISTING PEDESTAL ELEVATION
NOT TO SCALE

EXISTING PIER 2 ELEVATION
EXPANSION END
SCALE: 1:40

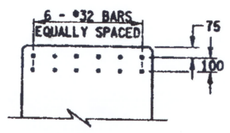

SECTION B-B
NOT TO SCALE

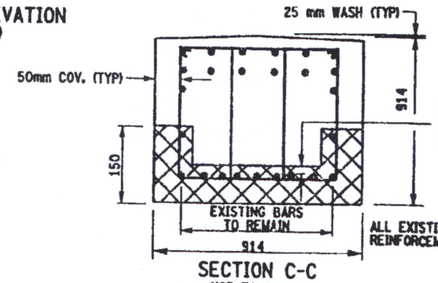

SECTION C-C
NOT TO SCALE

THE CONTRACTOR SHALL ONLY REMOVE AND REPLACE CONCRETE ON ¼ OF THE CIRCUMFERENCE OF THE COLUMN SIMULTANEOUSLY, FOR THE FULL CURING PERIOD.

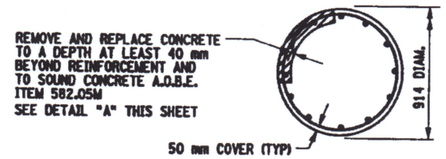

SECTION A-A
NOT TO SCALE

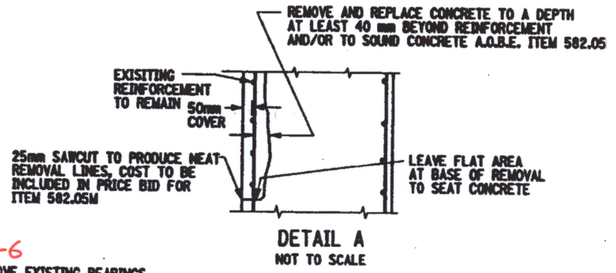

DETAIL A
NOT TO SCALE

LIMITS OF PAINT REMOVAL PRIOR TO WELD REMOVAL, AND RE-PAINTING ITEM 16570.76M AND ITEM 16570.32M. (SEE PAINT REMOVAL NOTE, THIS SHEET)

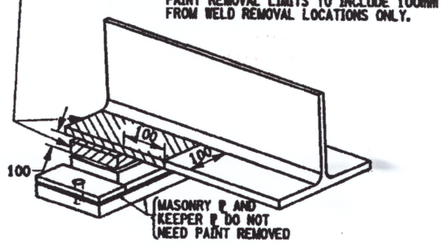

PAINT REMOVAL DETAIL
NOT TO SCALE

PAINT REMOVAL NOTE:

IN CONJUCTION WITH THE USE OF ITEM 16570.32M AND ITEM 16570.76M, ITEM 571.010004M - TREATMENT & DISPOSAL OF PAINT REMOVAL WASTE AND ITEM 570.090004M ENVIRONMENTAL GROUND PROTECTION, SHALL ALSO BE INCORPORATED DURING THE PAINT REMOVAL OPERATIONS.

LIST OF ITEMS USED:

ITEM 570.090004M - ENVIRONMENTAL GROUND PROTECTION (LS)
ITEM 16570.32M - LOCALIZED PAINTING OF BARE STRUCTURAL STEEL (SM)
ITEM 16570.76M - LOCALIZED VACUUM CONTAINED CLEANING - STRUCTURAL STEEL - IRREGULAR SURFACES (SM)
ITEM 571.010004M - TREATMENT AND DISPOSAL OF PAINT REMOVAL WASTE (CM)
ITEM 580.01M - REMOVAL OF STRUCTURAL CONCRETE (CM)
ITEM 582.05M - REMOVAL OF STRUCTURAL CONCRETE -REPLACE WITH CLASS A CONCRETE (CM)
ITEM 582.07M - REMOVAL OF STRUCTURAL CONCRETE -REPLACE WITH VERTICAL OVER HEAD PATCH MATERIAL (SM)
ITEM 585.02M - STRUCTURAL LIFTING OPERATION TYPE B (EA)
ITEM 589.520004M - REMOVAL OF EXISTING STEEL (EA)

LEGEND

- C-X — CORE LOCATION
- XX — PHOTO LOCATION
- DELAMINATION
- SPALLING
- CRACK
- MAP CRACKING
- MOISTURE

P2 - X — PIER 2 PEDESTAL NO. X

FED ROAD REG. NO.	STATE	CONTRACT NO.	SHEET NO.	TOTAL SHEETS
1	N.Y.	D259214	221	432

BRIDGE REHABILITATION PROJECT (ELEMENT SPECIFIC)
VARIOUS BRIDGES ON INTERSTATE 481
TOWNS OF DEWITT AND CICERO
ONONDAGA COUNTY
P.I.N. 305613 — P.I.N. 1008170

ALL DIMENSIONS ARE IN mm UNLESS OTHERWISE NOTED

AS BUILT REVISIONS

SIGNATURE — DATE

INTERSTATE 481 NB
OVER
ROUTE 5
PIER 2
REMOVAL DETAILS

STATE OF NEW YORK
DEPARTMENT OF TRANSPORTATION

FILENAME	REGION	DATE	DRAWING NO.
305613A1.P2A	3	10/02	PR2-2

CHECKED BY — DRAFTED BY — ESTIMATED BY — DESIGNED BY — JOB MANAGER — DESIGN SUPERVISOR

FED ROAD REG. NO.	STATE	CONTRACT NO.	SHEET NO.	TOTAL SHEETS
1	N.Y.	D259214	214	432

BRIDGE REHABILITATION PROJECT (ELEMENT SPECIFIC)
VARIOUS BRIDGES ON INTERSTATE 481
TOWNS OF DEWITT AND CICERO
ONONDAGA COUNTY
P.I.N. 305613 | B.I.N. 1002132

NOTES:
1. THE ABUTMENT HAS A SKEW=15°-12'-20"
2. ELEVATIONS ARE GIVEN FOR QUANTITY ESTIMATES ONLY.
3. REFER TO CONTRACT FISH 61-17 FOR ORIGINAL CONSTRUCTION DETAILS AND REPAIR PROJECTS D95879 AND D254274 FOR ADDITIONAL DETAILS.
4. 2 - 150mm WEEP HOLES SHALL BE INSTALLED UNDER THIS CONTRACT.
5. EXISTING DRAINAGE SHALL REMAIN AND BE CLEANED. ITEM 203.194 CLEANING DRAINAGE STRUCTURES AND MANHOLES (EACH)
6. SURVEY MONITIORING LOCATIONS CONSISTS OF A SMALL DIAMETER HOLE, DRILLED INTO CONCRETE AND PAINTED. THE CONTRACTOR SHALL TAKE CARE NOT TO DISTURB THESE LOCATIONS.

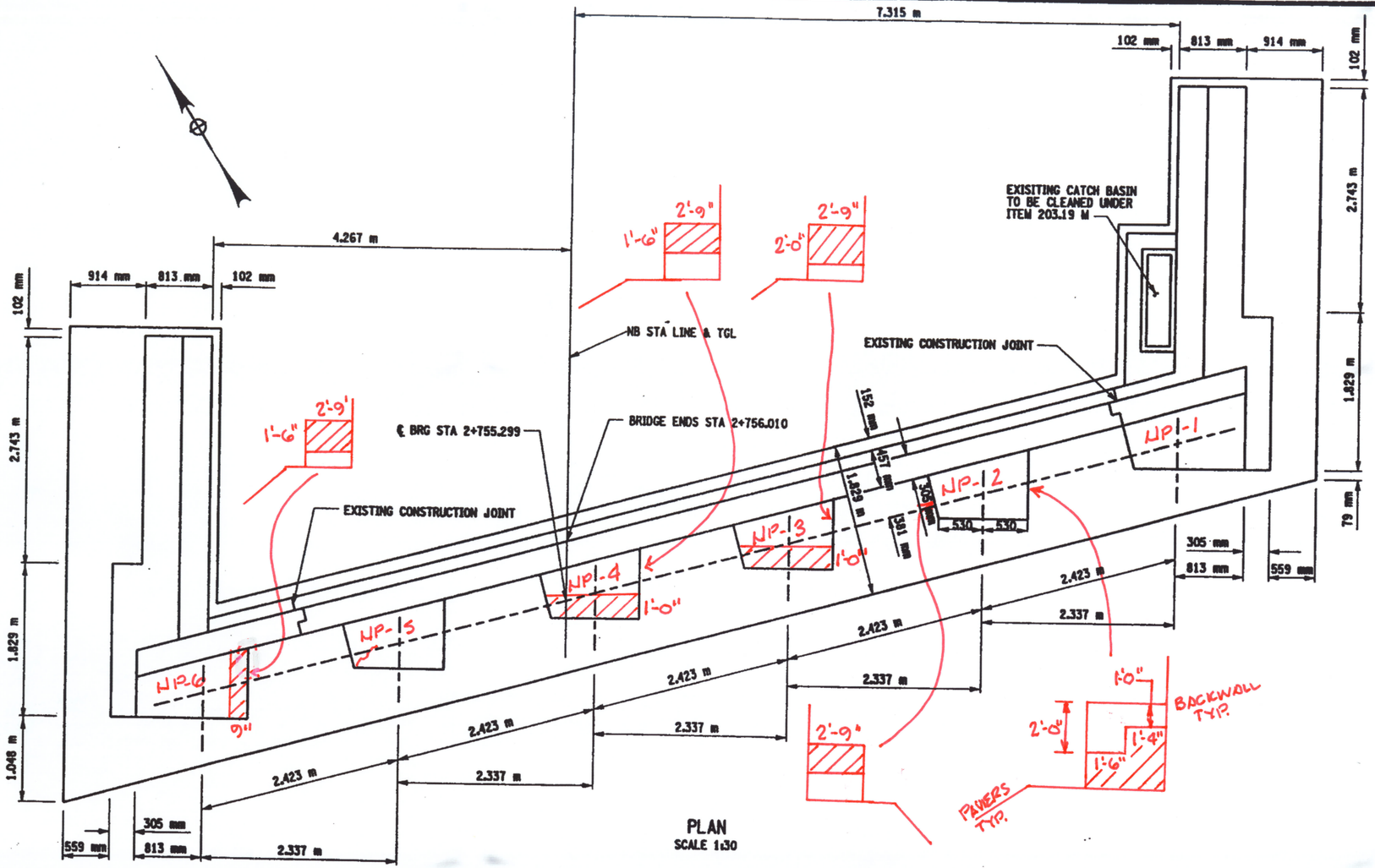

LEGEND

- C-X — CORE LOCATION
- XX — PHOTO LOCATION
- DELAMINATION
- SPALLING
- CRACK
- MAP CRACKING
- MOISTURE
- NP - X — NORTH ABUTMENT PEDESTAL NO. X

ALL DIMENSIONS ARE IN mm UNLESS OTHERWISE NOTED

AS BUILT REVISIONS

SIGNATURE DATE

INTERSTATE 481 NB
OVER
ROUTE 5
NORTH ABUTMENT

STATE OF NEW YORK
DEPARTMENT OF TRANSPORTATION

FILENAME | REGION | DATE | DRAWING NO

DESIGNED BY | DRAFTED BY | CHECKED BY
ESTIMATED BY | CHECKED BY
JOB MANAGER
DESIGN SUPERVISOR

IN-DEPTH PHOTO DOCUMENTATION

C&S Engineers, Inc.
499 Col. Eileen Collins Blvd.
Syracuse, New York 13212
Phone: (315) 455-2000
Fax: (315) 455-9667
www.cscos.com

I-481 SB over NYS Routes 5 & 92 - BIN 1002132



DESCRIPTION: SOUTH ABUTMENT – BACKWALL BETWEEN PEDESTALS 3 AND 4 – TYPICAL CONCRETE

PHOTO 1



DESCRIPTION: SOUTH ABUTMENT – PEDESTAL 5 – WEST FACE – DELAMINATED CONCRETE

PHOTO 2

C&S Engineers, Inc.
499 Col. Eileen Collins Blvd.
Syracuse, New York 13212
Phone: (315) 455-2000
Fax: (315) 455-9667
www.cscos.com

I-481 SB over NYS Routes 5 & 92 - BIN 1002132



DESCRIPTION: SOUTH ABUTMENT – BEARING 1 – RUST SCALE

PHOTO 3



DESCRIPTION: SOUTH ABUTMENT – BEARING 3 – TYPICAL

PHOTO 4

C&S Engineers, Inc.
499 Col. Eileen Collins Blvd.
Syracuse, New York 13212
Phone: (315) 455-2000
Fax: (315) 455-9667
www.cscos.com

I-481 SB over NYS Routes 5 & 92 - BIN 1002132



DESCRIPTION: SOUTH ABUTMENT – BAY 2 – UNDERSIDE OF BRIDGE DECK - TYPICAL

PHOTO 5



DESCRIPTION: SOUTH ABUTMENT – BETWEEN PEDESTALS 4 AND 5 - DRAIN

PHOTO 6

C&S Engineers, Inc.
499 Col. Eileen Collins Blvd.
Syracuse, New York 13212
Phone: (315) 455-2000
Fax: (315) 455-9667
www.cscos.com

I-481 SB over NYS Routes 5 & 92 - BIN 1002132



DESCRIPTION: PIER 1 – SOUTH FACE – WEST END – DELAMINATED CONCRETE ON COLUMN 3

PHOTO 7



DESCRIPTION: PIER 1 – SOUTH FACE – EAST END – DELAMINATED CONCRETE ON PIER 1

PHOTO 8

C&S Engineers, Inc.
499 Col. Eileen Collins Blvd.
Syracuse, New York 13212
Phone: (315) 455-2000
Fax: (315) 455-9667
www.cscos.com

I-481 SB over NYS Routes 5 & 92 - BIN 1002132



DESCRIPTION: PIER 1 – NORTH FACE – PEDESTAL 2 – TYPICAL CONCRETE

PHOTO 9



DESCRIPTION: PIER 1 – NORTH FACE – BEARING 4 – TYPICAL RUST

PHOTO 10

C&S Engineers, Inc.
499 Col. Eileen Collins Blvd.
Syracuse, New York 13212
Phone: (315) 455-2000
Fax: (315) 455-9667
www.cscos.com

I-481 SB over NYS Routes 5 & 92 - BIN 1002132



DESCRIPTION: WEST FACE – PIER 1 – SPALL IN PARAPET

PHOTO 11



DESCRIPTION: SPAN 2 – BAY 3 – FACING SOUTH – STEEL GIRDER (TYPICAL)

PHOTO 12

C&S Engineers, Inc.
499 Col. Eileen Collins Blvd.
Syracuse, New York 13212
Phone: (315) 455-2000
Fax: (315) 455-9667
www.cscos.com

I-481 SB over NYS Routes 5 & 92 - BIN 1002132



DESCRIPTION: SPAN 2 – BAY 3 – FACING NORTH – TYPICAL STEEL

PHOTO 13



DESCRIPTION: SPAN 2 – GIRDER 6 – FACING SOUTH – BOTTOM OF BRIDGE DECK (TYPICAL)

PHOTO 14

C&S Engineers, Inc.
499 Col. Eileen Collins Blvd.
Syracuse, New York 13212
Phone: (315) 455-2000
Fax: (315) 455-9667
www.cscos.com

I-481 SB over NYS Routes 5 & 92 - BIN 1002132



DESCRIPTION: PIER 2 – PEDESTAL 2 – TYPICAL STEEL

PHOTO 15



DESCRIPTION: SPAN 2 – BAY 1 – UNDERSIDE OF CONCRETE DECK

PHOTO 16

C&S Engineers, Inc.
499 Col. Eileen Collins Blvd.
Syracuse, New York 13212
Phone: (315) 455-2000
Fax: (315) 455-9667
www.cscos.com

I-481 SB over NYS Routes 5 & 92 - BIN 1002132



DESCRIPTION: SPAN 2 – GIRDER 2 – COVER PLATE WELD - TYPICAL

PHOTO 17



DESCRIPTION: PIER 2 – SOUTH FACE EAST END – CONCRETE DELAMINATION

PHOTO 18

C&S Engineers, Inc.
499 Col. Eileen Collins Blvd.
Syracuse, New York 13212
Phone: (315) 455-2000
Fax: (315) 455-9667
www.cscos.com

I-481 SB over NYS Routes 5 & 92 - BIN 1002132



DESCRIPTION: PIER 2 – SOUTH FACE WEST END – CONCRETE DELAMINATION

PHOTO 19



DESCRIPTION: PIER 2 – BOTTOM FACE – FACING EAST – SPALL IN CONCRETE

PHOTO 20

C&S Engineers, Inc.
499 Col. Eileen Collins Blvd.
Syracuse, New York 13212
Phone: (315) 455-2000
Fax: (315) 455-9667
www.cscos.com

I-481 SB over NYS Routes 5 & 92 - BIN 1002132



DESCRIPTION: PIER 2 – NORTH FACE – EAST END – DELAMINATED AND SPALLING CONCRETE

PHOTO 21



DESCRIPTION: PIER 2 – NORTH FACE – WEST END – DELAMINATED AND SPALLING CONCRETE

PHOTO 22

C&S Engineers, Inc.
499 Col. Eileen Collins Blvd.
Syracuse, New York 13212
Phone: (315) 455-2000
Fax: (315) 455-9667
www.cscos.com

I-481 SB over NYS Routes 5 & 92 - BIN 1002132



DESCRIPTION: PIER 2 – COLUMN 3 – FACING EAST – CONCRETE MAP CRACKING

PHOTO 23



DESCRIPTION: PIER 2 – FACING NORTH – BEARING 5 - TYPICAL

PHOTO 24

C&S Engineers, Inc.
499 Col. Eileen Collins Blvd.
Syracuse, New York 13212
Phone: (315) 455-2000
Fax: (315) 455-9667
www.cscos.com

I-481 SB over NYS Routes 5 & 92 - BIN 1002132



DESCRIPTION: NORTH ABUTMENT – PEDESTAL 2 SOUTH FACE – DELAMINATED CONCRETE

PHOTO 25



DESCRIPTION: NORTH ABUTMENT – PEDESTAL 2 WEST FACE – DELAMINATED CONCRETE

PHOTO 26

C&S Engineers, Inc.
499 Col. Eileen Collins Blvd.
Syracuse, New York 13212
Phone: (315) 455-2000
Fax: (315) 455-9667
www.cscos.com

I-481 SB over NYS Routes 5 & 92 - BIN 1002132



DESCRIPTION: NORTH ABUTMENT – PEDESTAL 2 EAST FACE – DELAMINATED CONCRETE

PHOTO 27



DESCRIPTION: NORTH ABUTMENT – PEDESTAL 3 SOUTH FACE – DELAMINATED CONCRETE

PHOTO 28

C&S Engineers, Inc.
499 Col. Eileen Collins Blvd.
Syracuse, New York 13212
Phone: (315) 455-2000
Fax: (315) 455-9667
www.cscos.com

I-481 SB over NYS Routes 5 & 92 - BIN 1002132



DESCRIPTION: NORTH ABUTMENT – PEDESTAL 4 SOUTH FACE – DELAMINATED CONCRETE

PHOTO 29



DESCRIPTION: NORTH ABUTMENT – PEDESTAL 5 SOUTH FACE – DELAMINATED CONCRETE

PHOTO 30

C&S Engineers, Inc.
499 Col. Eileen Collins Blvd.
Syracuse, New York 13212
Phone: (315) 455-2000
Fax: (315) 455-9667
www.cscos.com

I-481 SB over NYS Routes 5 & 92 - BIN 1002132



DESCRIPTION: NORTH ABUTMENT – PEDESTAL 6 SOUTH FACE – DELAMINATED CONCRETE

PHOTO 31



DESCRIPTION: NORTH ABUTMENT – BACKWALL – BETWEEN PEDEDSTAL 2 AND 3 – RUST AND MOISTURE STAIN – TYPICAL

PHOTO 32

C&S Engineers, Inc.
499 Col. Eileen Collins Blvd.
Syracuse, New York 13212
Phone: (315) 455-2000
Fax: (315) 455-9667
www.cscos.com

I-481 SB over NYS Routes 5 & 92 - BIN 1002132



DESCRIPTION: NORTH ABUTMENT – BEARING 6 – RUST SCALE

PHOTO 33



DESCRIPTION: NORTH ABUTMENT – BEARING 1 – RUST SCALE

PHOTO 34

C&S Engineers, Inc.
499 Col. Eileen Collins Blvd.
Syracuse, New York 13212
Phone: (315) 455-2000
Fax: (315) 455-9667
www.cscos.com

I-481 SB over NYS Routes 5 & 92 - BIN 1002132



DESCRIPTION: SOUTH ABUTMENT – FACING SOUTH

PHOTO 35



DESCRIPTION: PIER 1 – NORTH FACE

PHOTO 36

C&S Engineers, Inc.
499 Col. Eileen Collins Blvd.
Syracuse, New York 13212
Phone: (315) 455-2000
Fax: (315) 455-9667
www.cscos.com

I-481 SB over NYS Routes 5 & 92 - BIN 1002132



DESCRIPTION: PIER 2 – SOUTH FACE

PHOTO 37



DESCRIPTION: NORTH ABUTMENT – FACING NORTH

PHOTO 38

C&S Engineers, Inc.
499 Col. Eileen Collins Blvd.
Syracuse, New York 13212
Phone: (315) 455-2000
Fax: (315) 455-9667
www.cscos.com

I-481 SB over NYS Routes 5 & 92 - BIN 1002132



DESCRIPTION: BRIDGE ELEVATION – FACING WEST

PHOTO 39



DESCRIPTION: BRIDGE DECK – NORTH END
FACING SOUTH

PHOTO 40

BIN #1002132

PHOTO LOG MAP

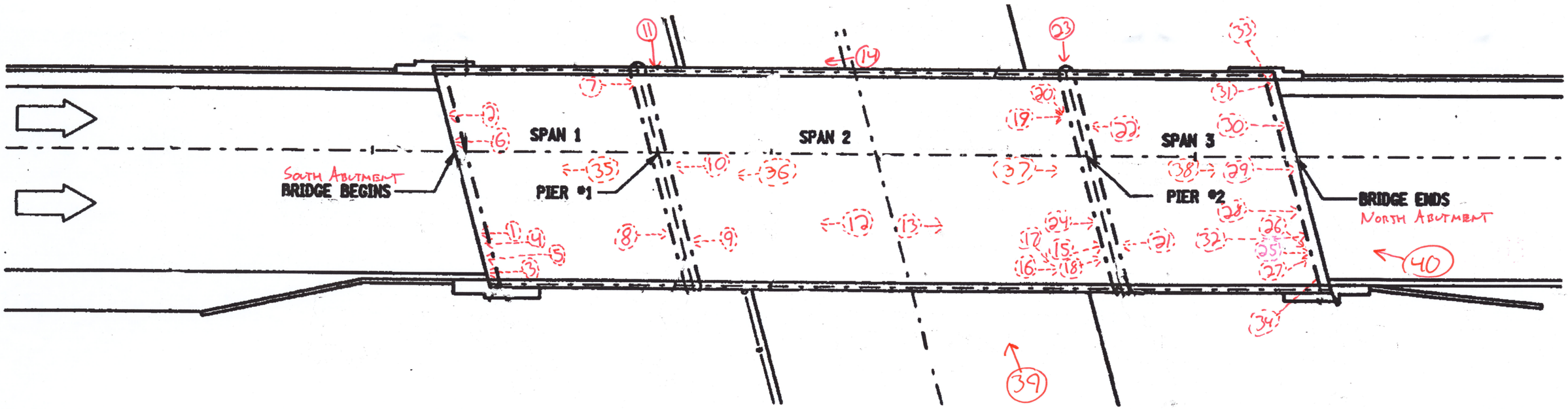

LEGEND

XX PHOTO LOCATION

XX HIDDEN PHOTO LOCATION

ASBESTOS DOCUMENTATION

ASBESTOS DOCUMENTATION FROM WATTS ARCHITECTURE & ENGINEERING, INC.

(WILL REPLACE BIN FOLDER ASBESTOS REPORT UPON COMPLETION)

Asbestos Sampling Survey

Location:

BIN 1-00213-2

Interstate Route 481 North Bound over Route 5

Prepared for:

New York State

Department of Transportation

PIN 3803.99.101

LaBella Project No. 97132

March, 1998

Table of Contents

Page

I. Project Summary 1

II. Site Description 1

III. Inspection Procedures 1

IV. Results 2

Certification 2

Figures and Table

I. Project Summary

In accordance with conditions of Term Agreement D010010, LaBella Associates, P.C. conducted an asbestos sampling survey of the Interstate Route 481 North Bound Bridge over Route 5. Based on laboratory analyses of bulk samples collected, the following material was determined to contain asbestos:

BIN 1-00213-2 Interstate Route 481 North Bound over Route 5

Type of Material	Estimated Amount
Sheet Packing	7.4 Square Meters

II. Site Description

The Site is located in Onondaga County, New York. For the purpose of this report, the Site consists of the Interstate Route 481 North Bound Bridge over Route 5 (See attached FIGURE 1 - Site Location Map).

III. Inspection Procedures

The following procedures were used to obtain the data for this Report:

A. A review of record drawings supplied by Region 3 personnel and a visual inspection of the subject structure were conducted to identify potential visible/accessible sources of asbestos-containing materials. Observations and notes were made to provide a description of the structure, and an estimate of the approximate amount, length, or area of ACM present.

B. Physical or operational constraints which might affect the removal of the ACM were identified and reported.

C. Bulk samples of suspected ACM were collected during the site inspection of the subject structure. Samples were taken from each homogeneous area that may contain ACM.

D. Samples were submitted for analysis. Preliminary PLM analyses of NOB materials were performed by LaBella Laboratories, a NYSDOH approved laboratory, to determine the presence and percentage of asbestos in each sample. TEM analyses of NOB materials, if necessary, were performed by EMSL Analytical, Inc. or New York Testing Laboratories, Inc.

E. Lab results were used to determine the approximate location, type, and amount of the verified ACM.

F. A drawing of the structure at the Site was created, in order to show sample locations and the approximate locations and amounts of confirmed ACM observed in accessible locations.

Only accessible areas were inspected. Inaccessible areas, such as areas within the bridge or the approaches to the bridge were not included in this inspection. No investigation was conducted by LaBella Associates to determine the presence of underground utilities on or in the immediate vicinity of the Site. Actual sample locations are shown in the attached FIGURE 2. Results of bulk sample analyses are tabulated in the attached TABLE.

IV. Results

BIN 1-00213-2 Interstate Route 481 North Bound over Route 5

Sheet Packing

Asbestos-containing sheet packing is located between the tops of the abutments and the deck slabs at both ends of the bridge. Most of this material is presently covered by the bridge deck, although the edges of this sheet packing are exposed and visible at various locations.

It is estimated that the total amount of this asbestos-containing sheet packing material on the bridge is approximately 7.4 square meters. This estimate is based on field measurements taken at the time of the site visit.

The approximate locations of this asbestos-containing sheet packing are shown in FIGURE 2.

Certification

LaBella Associates, P.C. certifies the accuracy of this report, to the best of our knowledge, based on the information collected as described in the Inspection Procedures Section of this investigation.

Figures & Table

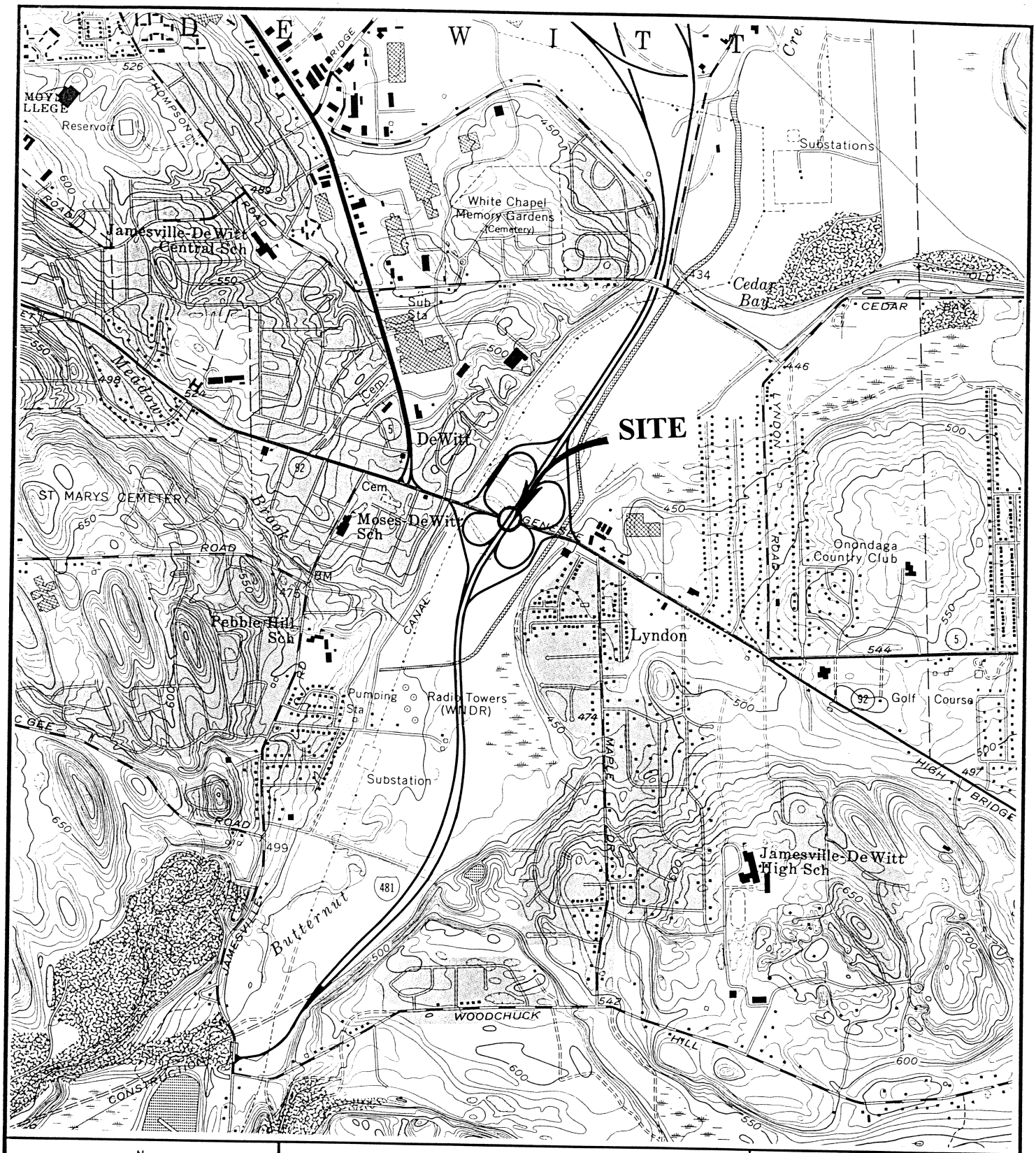

FIGURE 1
Site Location Map

I-481 NB OVER
ROUTE 5

BIN 1-00213-2

LABELLA

PROJECT NO. 97132

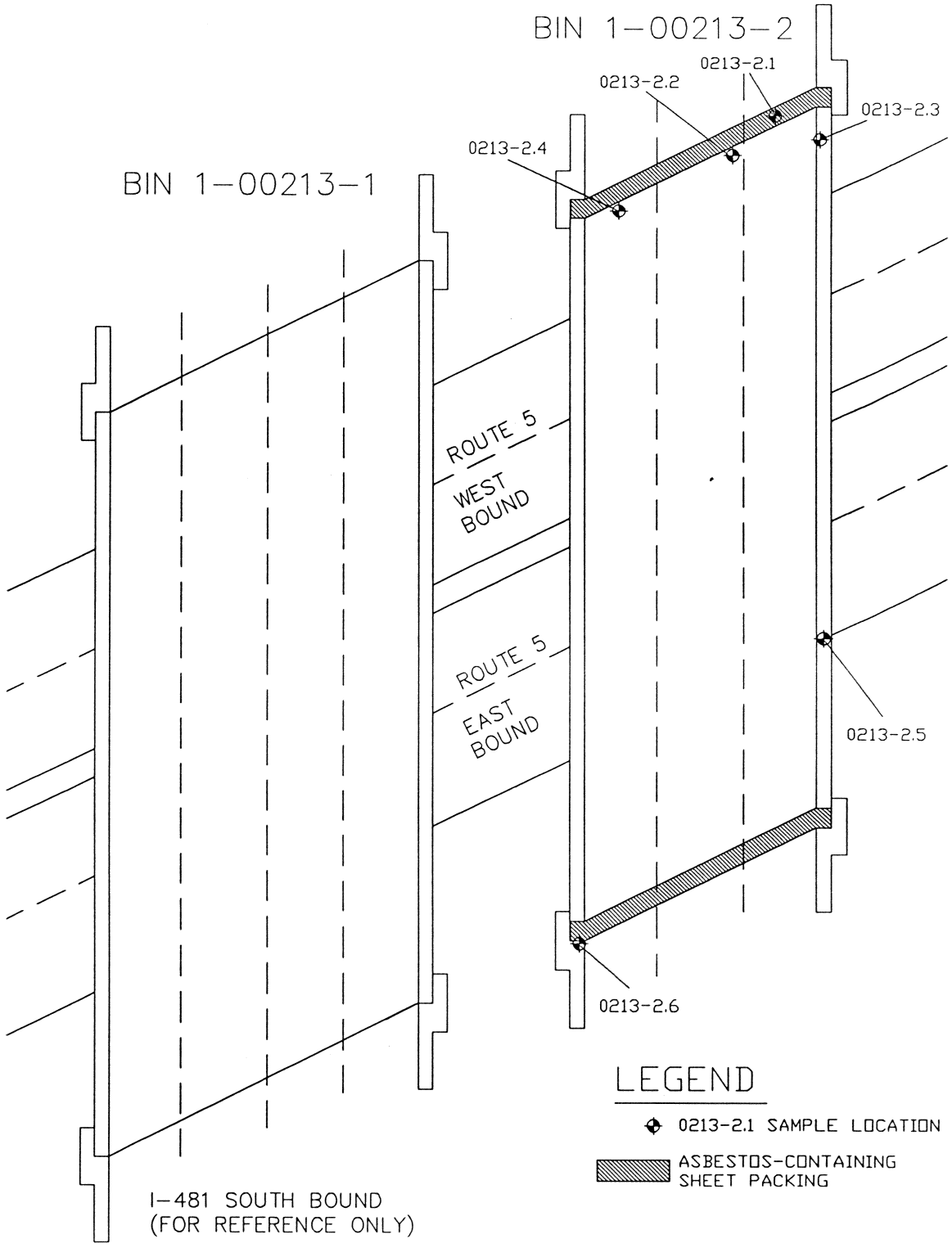

NORTH	PROJECT TITLE: ASBESTOS SAMPLING SURVEY 14 BRIDGES, VARIOUS COUNTIES, NEW YORK	PROJECT NO. 97132 PIN 3803.99.101
	FIGURE 2 : I-481 NORTH BOUND OVER ROUTE 5 BIN 1-00213-2 SAMPLE LOCATIONS AND CONFIRMED ACM	NOT TO SCALE DATE: MARCH, 1998

Bulk Sample Results Table

Asbestos Sampling Survey
BIN 1-00213-2
Interstate Route 481 North Bound over Route 5
Onondaga County, New York
LaBella Project # 97132
PIN 3803.99.101

Sample #	Sample Location	Type of Material	Results % Asbestos	Amount of Material	Specification Item No.
0213-2.1	**North End of Bridge Between Deck & Abutment**	**Sheet Packing**	**35% Chrysotile**	**7.4 Square Meters**	**15202.0627M**
0213-2.2	North End of Bridge Beneath Bearing	Bearing Pad	None Detected	N/A	N/A
0213-2.3	North End of Bridge on I-Beam	Green Paint	None Detected	N/A	N/A
0213-2.4	North End of Bridge on Pedestal	Masonry Coating	None Detected	N/A	N/A
0213-2.5	South End of Bridge	Gray Caulking	None Detected	N/A	N/A
0213-2.6	South End of Bridge Between Deck & Approach	Joint Filler	None Detected	N/A	N/A

NEW YORK STATE
DEPARTMENT OF TRANSPORTATION
D031085 P.I.N 3501.60

LEVEL 1 LOAD RATING
B.I.N. 1002132
I-481 Northbound over NYS Routes 5 & 92

LOAD RATING SUMMARY TABLE (LOAD FACTOR)					
CONTROLLING MEMBER	**CONTROLLING PARAMETER**	**LIVE LOAD**	**LIVE LOAD TYPE**	**INVENTORY RATING**	**OPERATING RATING**
(S3/ G3) INTERIOR GIRDER	SERVICE	HS20-44	Axle Load	HS 23.5 (42.22 TONS)	HS 39.2 (70.5 TONS)
(S3/ G2) INTERIOR GIRDER	SERVICE	ALTERNATE MILITARY LOADING	Axle Load	1.246 (29.91 TONS)	2.081 (49.94 TONS)

DOES NOT INCLUDE FUTURE WEARING COURSE

ANALYSIS METHOD:LOAD FACTOR

RECOMMENDED POSTING AS-IS CONDITION: _____ Tons __X__ None

CALCULATED BY:

STATE OF NEW YORK
CHARLES P. BROOKS III
089275
LICENSED PROFESSIONAL ENGINEER

DATE: 5/2/14

QUALITY ASSURANCE BY:

STATE OF NEW YORK
CHARLES F. STANTON IV
077396
LICENSED PROFESSIONAL ENGINEER

DATE: 5/2/14

C&S COMPANIES®
499 Col. Eileen Collins Blvd.
Syracuse, NY 13212
phone 315-455-2000
fax 315-455-9667
www.cscos.com

ENGINEERS
DESIGN BUILD
TECHNICAL RESOURCES
OPERATIONS

C&S Companies

C&S Engineers, Inc.
Syracuse Hancock International Airport
Syracuse, NY 13212
phone 315-455-2000
fax 315-455-9667
www.cscos.com

TECHNICAL MEMORANDUM

TO: FILE (190.514.001)

FROM: JESSICA S. BAUER, P.E
NYSPE 084915

DATE: FEBRUARY 4, 2014

C&S PROJECT NO.: 190.514.001

RE: SEISMIC ASSESSMENT SUMMARY
NEW YORK STATE DEPARTMENT OF TRANSPORTATION
D031085; PIN 3501.60; I-81

BIN: 1002132 Seismic Assessment

This memorandum summarizes the seismic assessment conducted for BIN 1002132 as part of the Interstate 81 Project in Syracuse, NY. The purpose of the assessment is to determine if seismic retrofits are warranted at the superstructure to substructure connection, and if further seismic evaluation of the structure is required. This memorandum will give the assessment results, retrofits required and recommendations for further seismic evaluation of the structure.

ASSESSMENT PROCEDURE

The seismic assessment was performed in accordance with the FHWA Seismic Retrofitting Manual for Highway Structures: Part 1 - Bridges, January 2006. As per the referenced manual, seismic assessment was performed for both lower level and upper level earthquake ground motion. The lower level earthquake ground motion has a reasonable likelihood of occurrence within the life of the bridge (50% probability of exceedance within a 75 year bridge life). The upper level earthquake ground motion has a finite likelihood of occurrence within the life of the bridge (7% probability of exceedance within a 75 year bridge life).

Values for the spectral acceleration for the Syracuse area used in the assessment are as follows:

- Lower Level Earthquake Ground Motion for a Short Period (0.2 seconds): $S_S = 0.0251$
- Lower Level Earthquake Ground Motion for a Long Period (1.0 seconds): $S_1 = 0.0076$
- Upper Level Earthquake Ground Motion for a Short Period (0.2 seconds): $S_S = 0.139$
- Upper Level Earthquake Ground Motion for a Long Period (1.0 seconds): $S_1 = 0.047$

These values are considered constant and are the same for all seismic assessments of bridges in the Syracuse area.

The Site Class is based on the soil conditions at the bridge location. It was determined that this parameter has little effect on the results of the seismic assessment because the spectral

You created this PDF from an application that is not licensed to print to novaPDF printer (http://www.novapdf.com)

acceleration values for the Syracuse area are small. Based on this, a site class of D was used for all seismic assessments of bridges in the Syracuse area.

Bridge parameters used in the seismic assessment were retrieved from the record drawings and WinBolts data.

The seismic assessment takes into account the anticipated service life, importance, and the seismic exposure of the bridge to determine a seismic retrofit category (SRC). The SRC is then used to determine seismic evaluation methods and retrofit measures. There are four SRCs, A through D. Seismic retrofit category A is the lowest category; bridges in this category do not require retrofits or further seismic evaluation. Seismic retrofit category D is the highest category; bridges in this category requiring the most rigorous seismic evaluations and retrofits.

ASSESSMENT RESULTS

The SRC for the bridge is "**C**" for lower level earthquake ground motion and "**B**" for upper level earthquake ground motion.

RETROFITS REQUIRED

Bearing replacements and seat width improvements are not required at the abutments or piers. Additional retrofits may be required if further seismic evaluation is needed.

RECOMMENDATIONS FOR FURTHER SEISMIC EVALUATION

For the lower level earthquake ground motion, it is recommended that capacity/demand ratios for bridge components are calculated as per Section 5.4 of the referenced manual. For the upper level earthquake ground motion, it is recommended that the capacities of the bearings are checked as per Section 5.2 of the referenced manual.

Retrofit cost estimates will be provided after any further required seismic evaluations are completed.

You created this PDF from an application that is not licensed to print to novaPDF printer (http://www.novapdf.com)

ENGINEERS
DESIGN BUILD
TECHNICAL RESOURCES
OPERATIONS

C&S Companies

C&S Engineers, Inc.
Syracuse Hancock International Airport
Syracuse, NY 13212
phone 315-455-2000
fax 315-455-9667
www.cscos.com

TECHNICAL MEMORANDUM

TO: **FILE (190.514.001)**

FROM: **PAUL F. BYRNE, P.E.**
NYSPE 055928

DATE: **JUNE 2, 2014**

C&S PROJECT NO.: 190.514.001

RE: **NEW YORK STATE DEPARTMENT OF TRANSPORTATION**
D031085; PIN 3501.60; I-81 Opportunities, BIN 1002132 Fatigue Evaluation

---

This memorandum documents a fatigue evaluation conducted for the existing Interstate 81 Viaduct Project. Existing structures with AASHTO Category D, E, and E' fatigue-prone details require 100% hands-on inspection unless proven to be exempt. The purpose of the evaluation is to assess the remaining life of fatigue-prone components.

EVALUATION PROCEDURES

The fatigue evaluation was performed in accordance with the AASHTO Guide Specification for Fatigue Evaluations of Existing Steel Bridges, 1990. Fatigue-prone welds identified in the biennial inspection reports were located on record drawings and confirmed visually in the field. Additional information concerning fatigue-prone welds located in BIN folders was also obtained and reviewed prior to inspection.

EVALUATION RESULTS

The results of the fatigue evaluation of the existing bridge are shown below. The remaining safe fatigue life of the fatigue components have been **exhausted**.

Fatigue Detail Location	Remaining Safe Fatigue Life (Years)	Remaining Mean Fatigue Life (Years)
Span 1, Interior Girders, End of Bottom Flange Cover Plate	-18.81	17.30
Span 2, Exterior Girder G1, End of Bottom Flange Cover Plate	-18.41	19.27
Span 2, Exterior Girder G6, End of Bottom Flange Cover Plate	-17.30	24.74
Span 2, Interior Girders, End of Bottom Flange Cover Plate	-11.93	51.18
Span 3, Interior Girders, End of Bottom Flange Cover Plate	-18.64	18.13

IN-DEPTH INSPECTION REPORT

D031085 P.I.N. 3501.60

B.I.N. 1031501

TEAM LEADER	Andrew J. Fuller, P.E.	59848
		NYSPE LICENSE #

ASSISTANT TEAM LEADER	Charles Brooks, P.E.
ASSISTANT TEAM LEADER	Logan Bessel
ASSISTANT TEAM LEADER	Jerome Getter

FEATURE CARRIED	I – 81 Northbound and Southbound
FEATURE CROSSED	State Route 173

DATE FIELD WORK BEGAN	February 26, 2014
DATE FIELD WORK COMPLETED	March 4, 2014

TABLE OF CONTENTS

- TP 349 & 350
- IN-DEPTH CONDITION DOCUMENTATION
- IN-DEPTH PHOTO DOCUMENTATION
- ASBESTOS REPORT

TP 349 & TP 350

BRIDGE ELEMENT RATINGS

Inspection Date: 6/26/2013 RC: 33 BIN: 1031501

Bridge Ratings

Carried: 81I 81I33012011 Crossed: 173 173 33012014 CheckValue: 1,832,669,193

Inspection Agency: 10 - NYSDOT Type of Inspection: 1 - BIENNIAL
GTMS: 302 -- Steel - Stringer/Multi-Beam or Girder
POSTINGS: See Gen Rec Page 1 for Postings at time of inspection.
Further Investigation Needed: No
State Highway Number: 64-7 Milepoint: 15.99 AADT/Yr: 18200 / 2008
Orientation: 1 - North Political Unit: 2055 - City of SYRACUSE Year Built: 1965
Total Spans: 4 Ramp Bridge Attached To Span: NA BIN: NA
General Recommendation: 6 Computed Condition Rating: 4.984

Abutment Ratings:	**Beg Abut**	**End Abut**
Joint with Deck	6	4
Bearings, Bolts, Pads	6	6
Seats and Pedestals	6	6
Backwall	5	5
Stem (Breastwall)	8	8
Erosion or Scour	5	5
Footings	9	9
Piles	8	8
Recommendation	6	6

Wingwall Ratings:	**Beg Abut**	**End Abut**
Walls	5	5
Footings	9	9
Erosion or Scour	6	6
Piles	8	8

Channel Ratings:	**Channel**
Stream Alignment	8
Erosion and Scour	8
Waterway Opening	8
Bank Protection	8

Approach Ratings:	**Approaches**
Drainage	6
Embankment	6
Settlement	5
Erosion	6
Pavement	4
Guide Railing	5

Number of Flags Issued:

RED: 0 Yellow: 0 Safety: 0

Vulnerability Reviews Recommended: 1=Yes, 2=No, 3=NA, X=NotActive

Hydraulic: 3	Overload: X	Steel: 2
Collision: 2	Concrete: X	Seismic: X

Inspector's Signature: CheckValue: 1,832,669,193 Date: 6/26/2013

Mike Kostakis,PE () (Inspector ID:3000044)

Signed copy of this inspection report is available in the appropriate NYSDOT Regional Office

Reviewed By: Date: 9/10/2013

James R. Manning,PE () (QC ID:3000023)

Signed copy of this inspection report is available in the appropriate NYSDOT Regional Office

Inspection Date: 6/26/2013 RC: 33 BIN: 1031501

Span Ratings

Carried: 81I 81I33012011 Crossed: 173 173 33012014 CheckValue: 1,832,669,193

Deck Element Ratings:	001	002	003	004
Wearing Surface	5	5	3	5
Curbs	4	5	3	3
Sidewalks, Fascias	6	6	6	6
Railings, Parapets	6	6	6	6
Scuppers	8	8	8	8
Gratings	8	8	8	8
Median	8	8	8	8
Mono Deck Surface	5	5	3	5

Superstructure Ratings:	001	002	003	004
Structural Deck	5	5	5	5
Primary Members	5	5	5	5
Secondary Members	6	6	6	6
Paint	6	6	6	6
Joints	4	4	4	8
Recommendation	5	5	5	5

Pier Ratings:	001	002	003	004
Bearings, Bolts, Pads	6	6	6	8
Pedestals	6	6	6	8
Top of Cap or Beam	5	5	5	8
Stem Solid Pier	8	8	8	8
Cap Beam	6	6	6	8
Pier Columns	6	5	6	8
Footings	9	9	9	8
Erosion or Scour	6	6	6	8
Piles	8	8	8	8
Recommendation	6	6	6	8

Utility Ratings:	001	002	003	004
Lighting	8	8	8	8
Sign Structure	8	8	8	6
Utilities and Support	8	8	8	8

Field Notes:

Field Date	Arrival	Departure	Temp (C)	Temp (F)	Weather Conditions
6/26/2013	1:00:00 PM	4:00:00 PM	24	75	Hot humid

IN-DEPTH CONDITION DOCUMENTATION

BIN 1031501

Visual Inspection

The bridge was constructed in 1965 under contract F.A.C. 64-7 as a 2 lane structure. In 1975, under contract D95042, the original bridge was widened on the east side to accommodate an additional lane. This contract extended the abutments and added an additional set of columns with capbeam adjacent to, but not connected to the existing elements. Miscellaneous concrete repairs were completed on the deck and the columns, deck joint replacements, bearing restorations and replacement of the separate capbeams with a single continuous capbeam at each pier were completed in 2004 under contract D259778.

Cracks, spalls, and other field observations are shown on the plans. Below is a brief summary of conditions for each feature.

Superstructure

Deck – See Bridge Deck Evaluation Report

Steel – See Structural Steel Inspection Summary

Bearings – Bearing elements were typically painted over and had varying amounts of salt accumulation.

Substructure

South Abutment – Delaminated concrete was found at 2 locations during the field investigation. The first area spans the backwall between pedestals 2 to 4 a distance of 18’-0” with a varying height from 3’-6” to 5’-0”. The second area is adjacent to pedestal 6 being 2’ wide by 4’ high. The abutment exhibited some minor cracking, salt accumulation, and ice accumulation. The deck joint above the abutment was leaking allowing water, salt, and ice to accumulate on the bridge seat and pedestals.

Piers – The three piers exhibited isolated areas delaminated concrete on the capbeams or pedestals. Also, isolated areas of delaminated concrete were found on the columns and are minor except for column 4 at the easterly end of pier 2. This column contained several full-height vertical cracks that were adjacent to areas of delaminated concrete. The joints above each pier were leaking and allowed water, salt, and ice to accumulate on the capbeam, bearings and pedestals.

North Abutment – The abutment backwall exhibited a single area of delaminated concrete between pedestals 2 and 3. The delaminated concrete covers the surface below the pedestal elevation to the finished grade. A large spall area is located between the pedestals, has an exposed rebar centered in it and extends to the top of backwall. A second portion of delaminated concrete is adjacent to this spall, extends to the center of pedestal 3 and also extends to the top of the backwall. The deck joint above the abutment was leaking allowing water, salt and ice to accumulate on the bridge seat and pedestals. The concrete cap on the cheekwall, adjacent to pedestal 8, is spalled off at each end and has several cracks that have started to spall as well. The concrete joint from prior repairs under the cap is open around the perimeter of the cheekwall showing rust stains and accumulation of salt.

STRUCTURAL STEEL INSPECTION SUMMARY

BIN 1031501

Special Emphasis Inspection Required

Non-Redundant/Fracture Critical Members – No

Pin and Hangers – No

Fatigue-Prone Welds – Yes

Non-Categorized Fatigue-Prone Details – No

Other (Specified in Text) – No

Special Emphasis Details

The girders contained partial length, welded cover plates. 100% Hands-on inspection was performed, no cracks were found.

Overall Steel Condition

The steel showed no sign of major deterioration. No areas of concern were observed.

Paint

Generally, the paint appeared to be in good condition. There was minimal delaminated paint on cross frames and girders. Some rust accumulation near the bearing and below deck joints was observed.

Section Loss

Due to the age of the steel a blanket 5% section loss to the bottom flanges should be used in load rating.

BIN 1031501 Plan View

- map cracking through out entire deck
- 1" agg. loss through out deck surface
- 90% surface loss

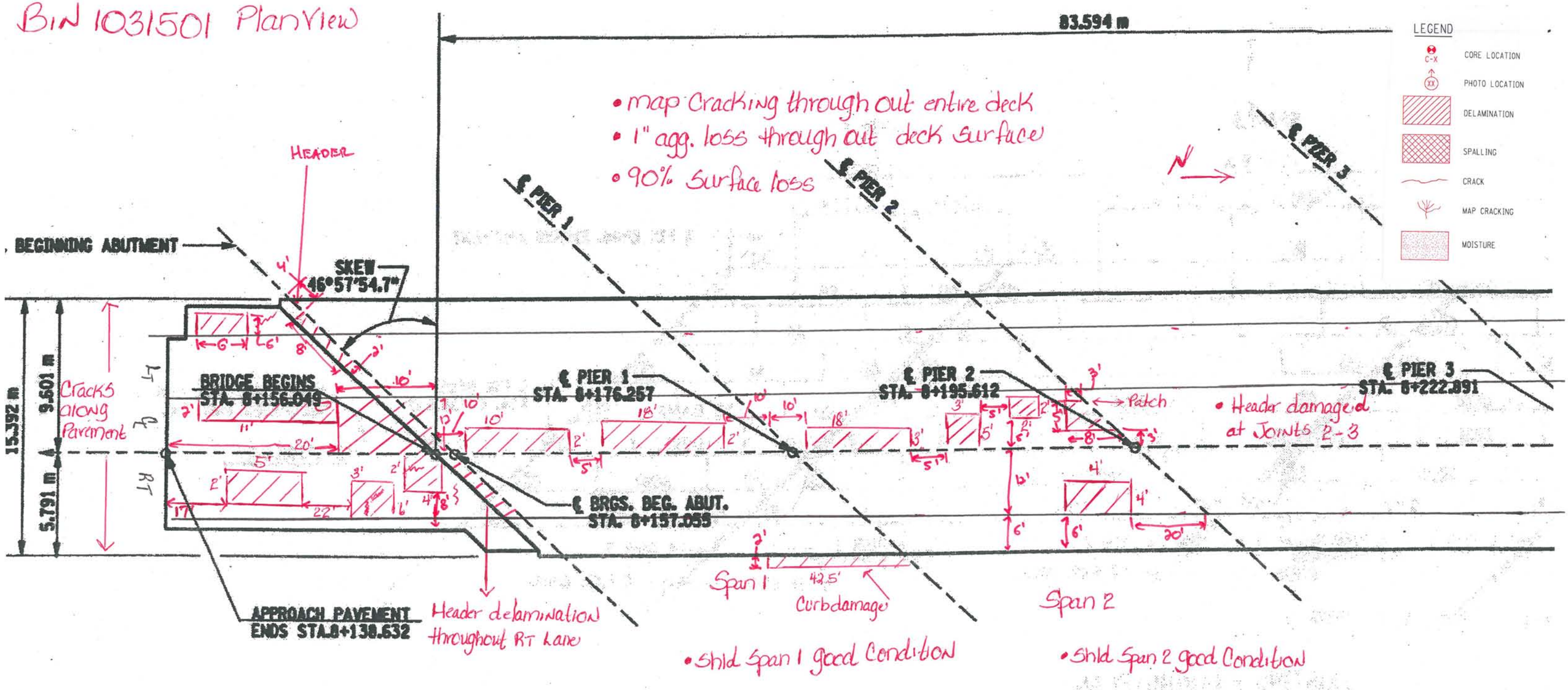

BIN 1031501
I-81 SB O/RT 173

DECK PLAN
SCALE 1:200

NOTES:

MINOR DECK REPAIR IS
AREA TO BE REPAIRED

REPAIR DETERIORATED
ON BRIDGE DECK IN AC
WITH ITEM 18502.2002

ASSUME 10% OF THE B
WILL BE REPAIRED. TH
THESE AREAS DURING



NTS

BIN 1031501 Plan View

- Map Cracking through out entire deck
- 1" agg. loss through out deck surface
- 90% surface loss

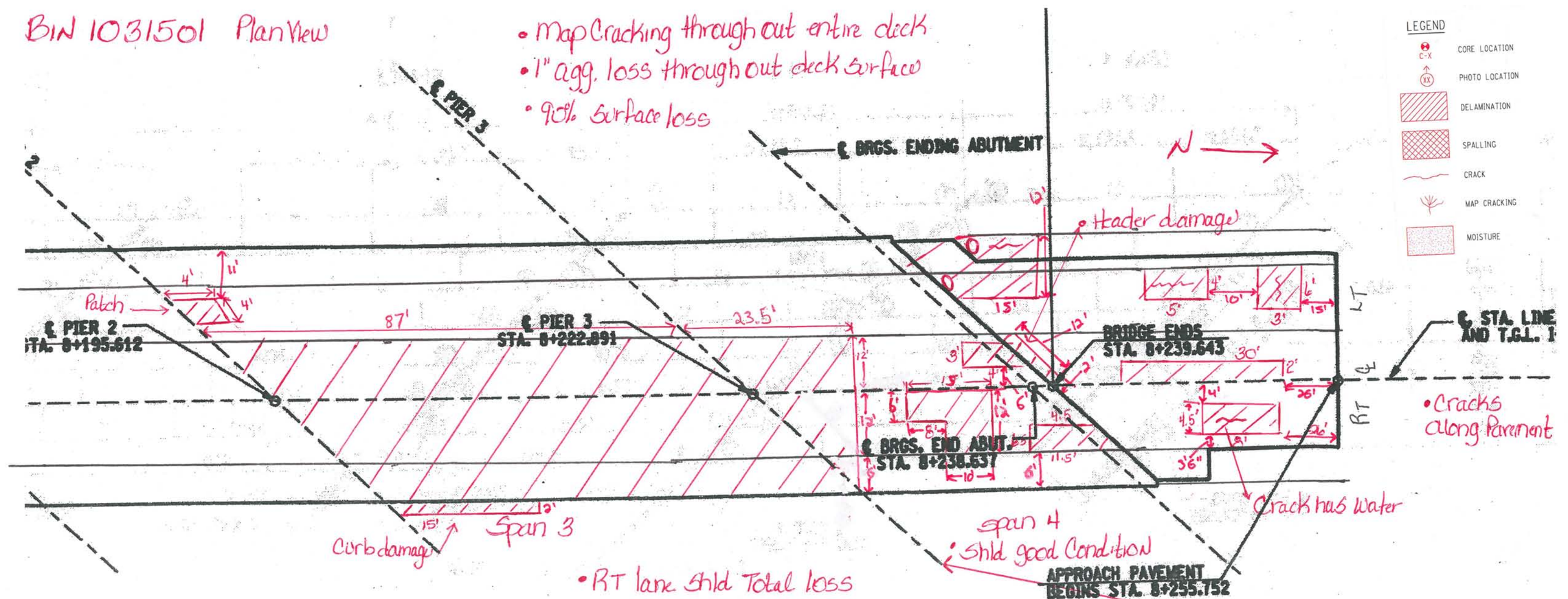

- RT lane Shld Total loss
- Through out RT lane various patch work
- Header Cracked along joint

DECK PLAN
SCALE 1:200

BIN 1031501
I-81 SB O/RT 173

NOTES:

MINOR DECK REPAIR IS REQUIRED.
AREA TO BE REPAIRED A.O.B.E.

REPAIR DETERIORATED CONCRETE ON BRIDGE DECK IN ACCORDANCE WITH ITEM 18502.2002, 16504.14 AND 558.01.

ASSUME 10% OF THE BRIDGE DECK AREA WILL BE REPAIRED. THE EIC WILL IDENTIFY THESE AREAS DURING CONSTRUCTION.



NTS

BIN 1031501 → Core locations

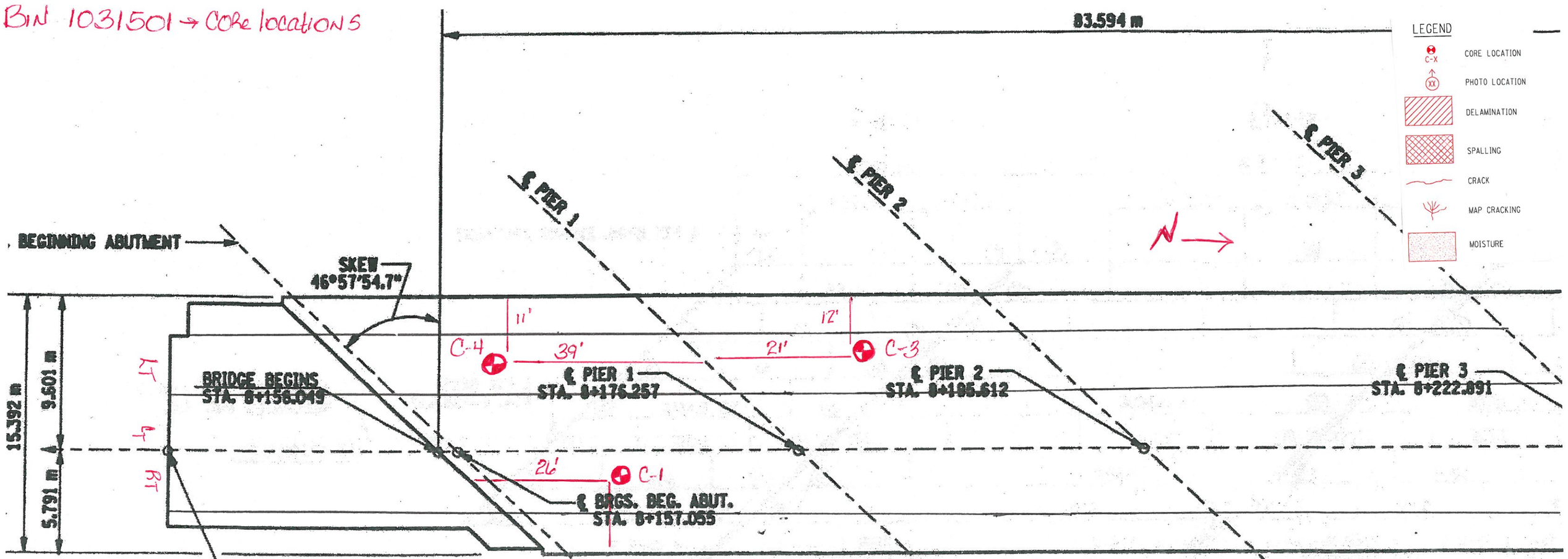

C-1 - RT lane - Span 1
26' ± from Joint
10' from Curb

C-3 - LT lane - Span 2
21' - Joint
12' - Curb

C-4 - LT lane - Span 1
39' - Joint
11' - Curb

DECK PLAN
SCALE 1:200

BIN 1031501
I-81 SB O/RT 173

NOTES:

MINOR DECK REPAIR IS
AREA TO BE REPAIRED

REPAIR DETERIORATED
ON BRIDGE DECK IN A
WITH ITEM 18502.200

ASSUME 10% OF THE
WILL BE REPAIRED. TH
THESE AREAS DURING

NTS



BIN 1031501 → CORE LOCATIONS

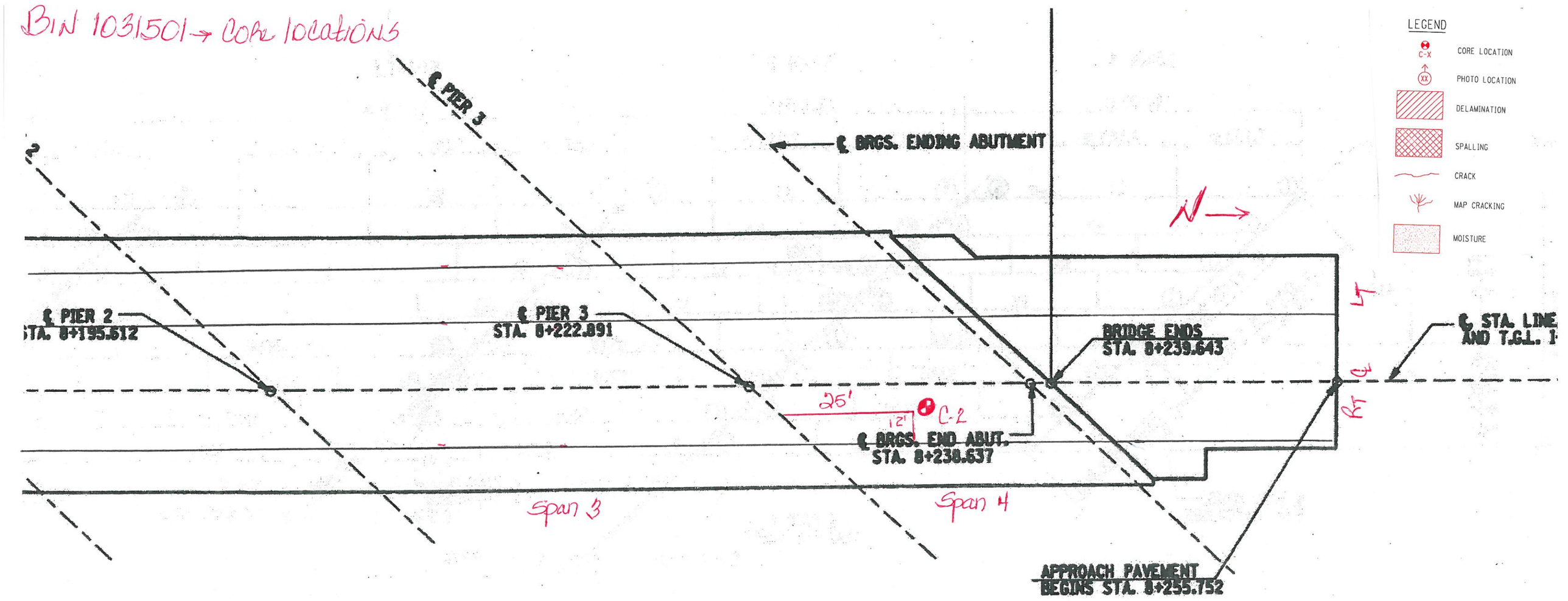

C-2 - RT lane - Span 4
25' from joint
12' from curb

DECK PLAN
SCALE 1:200

BIN 1031501
I-81 SB o/RT 173

NOTES:

MINOR DECK REPAIR IS REQUIRED.
AREA TO BE REPAIRED A.O.B.E.

REPAIR DETERIORATED CONCRETE
ON BRIDGE DECK IN ACCORDANCE
WITH ITEM 18502.2002, 16584.14 AND 558.01.

ASSUME 10% OF THE BRIDGE DECK AREA
WILL BE REPAIRED. THE EIC WILL IDENTIFY
THESE AREAS DURING CONSTRUCTION.

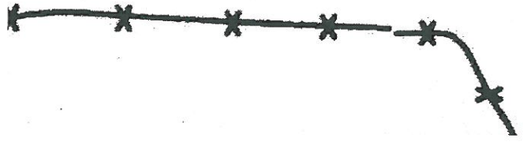

NTS

FED ROAD REG. NO.	STATE	CONTRACT NO.	SHEET NO.	TOTAL SHEETS
1	N.Y.	D259778	124	204

P.I.N. 350145 B.I.N. 1031501

ONONDAGA COUNTY

INTERSTATE ROUTE 505, SH 64-07

INTERSTATE 81 OVER ROUTE 173

CITY OF SYRACUSE

ESTIMATED BY _____ DRAFTED BY M. CONRAD _____ CHECKED BY G. WEISS

DESIGN SUPERVISOR M. SARRAO _____ JOB MANAGER R. SINGH _____ DESIGNED BY G. WEISS _____ CHECKED BY R. SINGH

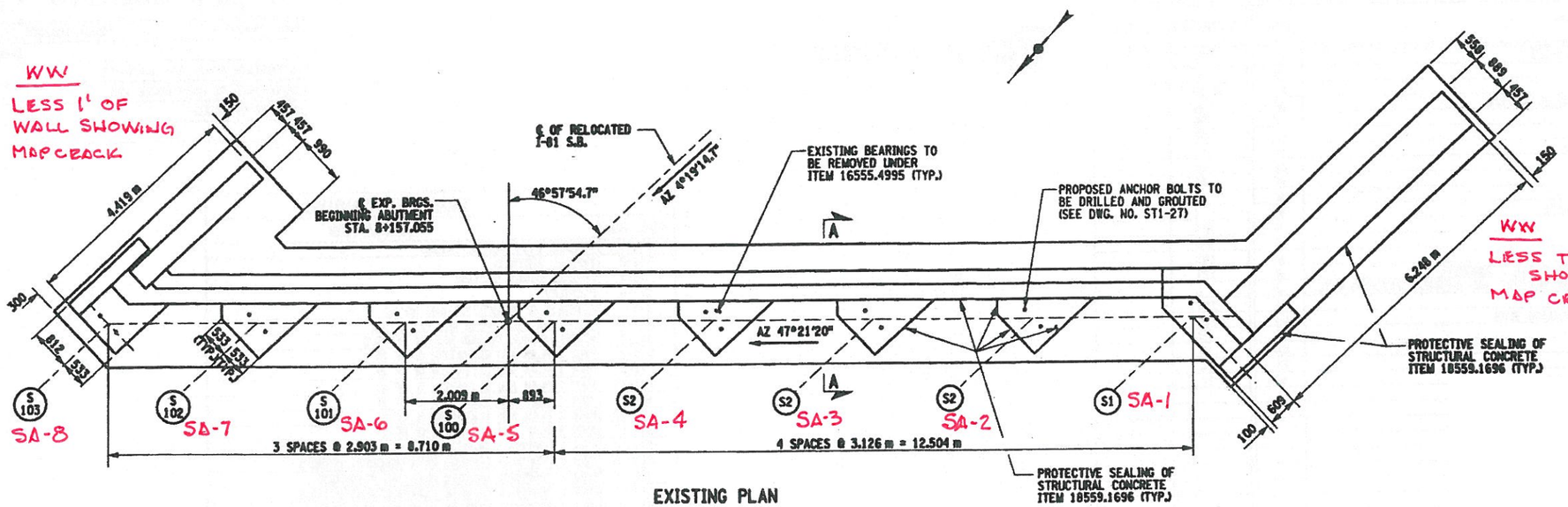

EXISTING PLAN

NOTE:
ALL STRINGERS ARE PARALLEL TO ℄ OF I-81 S.B.

LEGEND

- C-X — CORE LOCATION
- XX — PHOTO LOCATION
- DELAMINATION
- SPALLING
- CRACK
- MAP CRACKING
- MOISTURE

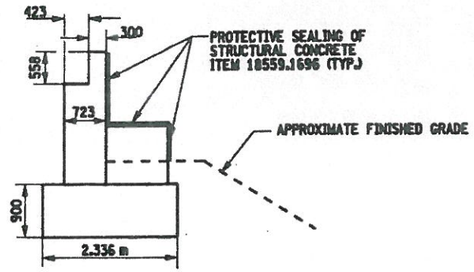

EXISTING SECTION A-A

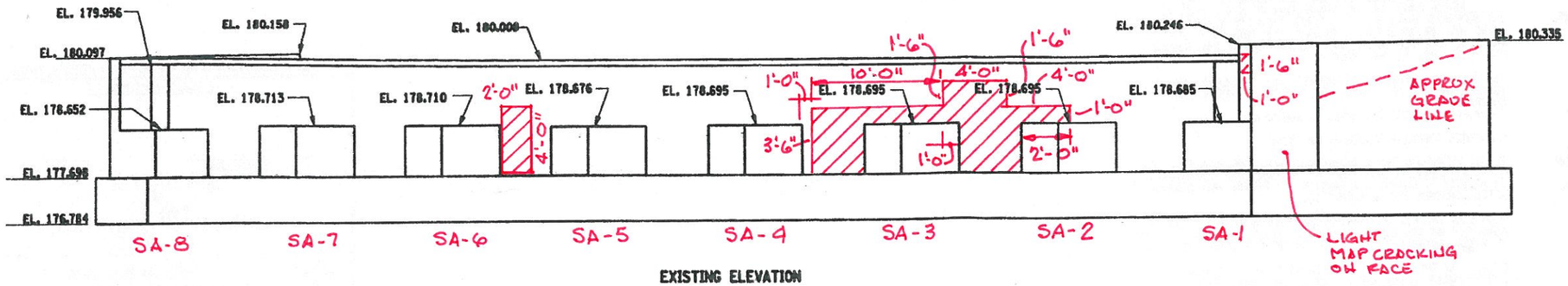

EXISTING ELEVATION

ALL ELEVATIONS ARE IN METERS
ALL DIMENSIONS ARE IN mm UNLESS OTHERWISE NOTED

AS BUILT REVISIONS

SIGNATURE DATE

INTERSTATE 81 SB
OVER
ROUTE 173

BEGINNING ABUTMENT PLAN AND ELEVATION

STATE OF NEW YORK
DEPARTMENT OF TRANSPORTATION

DOCUMENT NAME	REGION	DATE	DRAWING NO.
350145AA_A1A.DGN	03	10/04	ST1-6

FED ROAD REG. NO.	STATE	CONTRACT NO.	SHEET NO.	TOTAL SHEETS
1	N.Y.	D259778	126	204

P.I.N. 350145 B.I.N. 1031501

ONONDAGA COUNTY

INTERSTATE ROUTE 505, SN 64-07

INTERSTATE 81 OVER ROUTE 173

CITY OF SYRACUSE

ESTIMATED BY ____ DRAFTED BY W. CONRAD CHECKED BY G. WEISS

DESIGNED BY G. WEISS JOB MANAGER R. SINGH CHECKED BY R. SINGH

DESIGN SUPERVISOR W. SABRAG

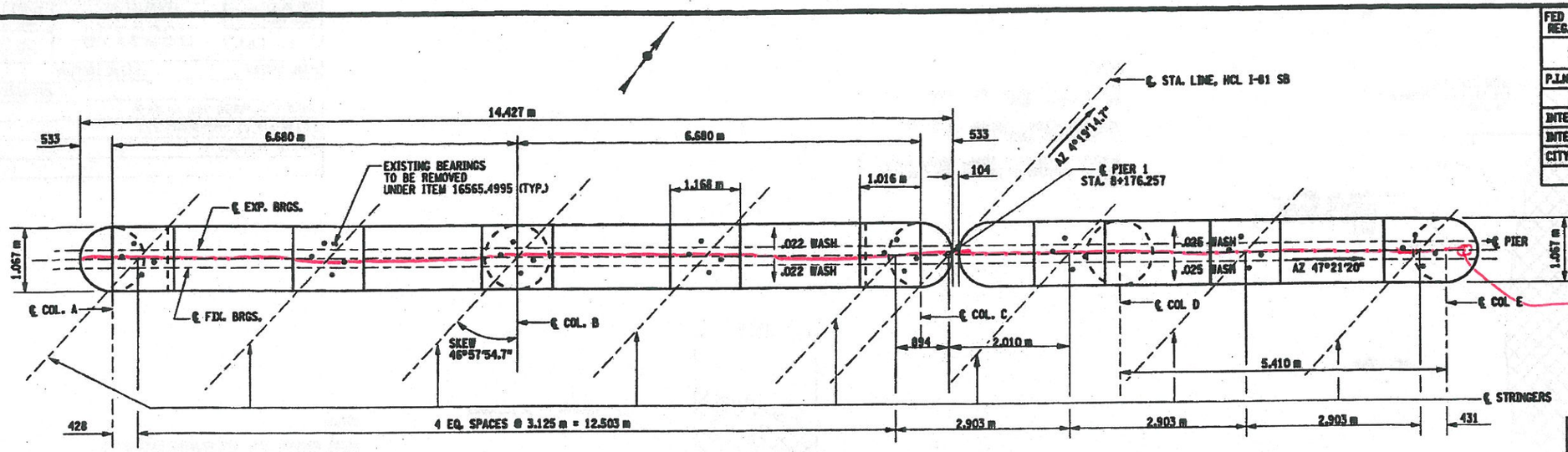

NOTE: ALL STRINGERS ARE PARALLEL TO ℄ I-81 S.B.

EXISTING PLAN
PIER 1

UNDERDECK
JOINT SALT STAINED
HAUNCHES CRACK, SPALLED, EXPOSED REINF (TYP. FULL WIDTH) OF BRIDGE

PEDESTALS - GOOD CONDITION
BEARING - SALT STAINED FROM LEAKING JOINTS

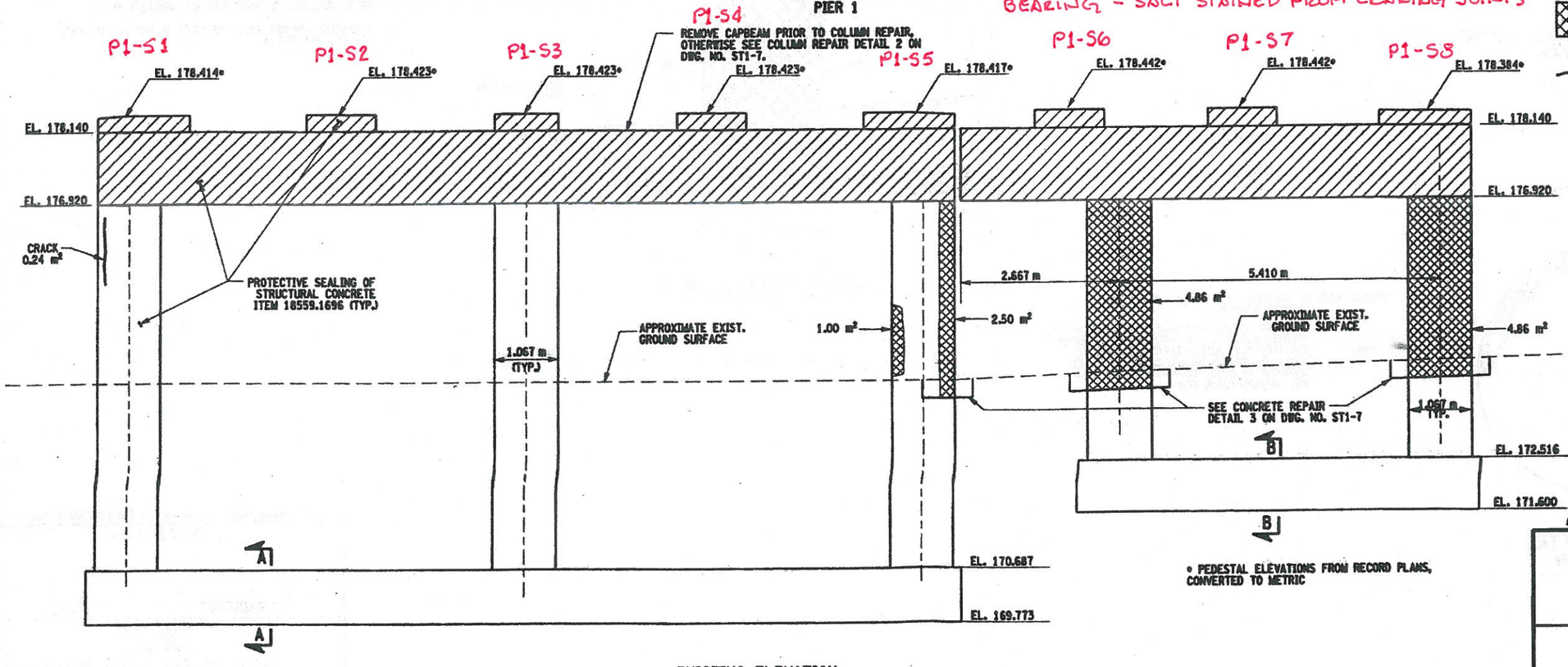

EXISTING ELEVATION
SOUTH FACE

° PEDESTAL ELEVATIONS FROM RECORD PLANS, CONVERTED TO METRIC

REMOVE EXISTING CAPBEAM UNDER ITEM 580.01. CONSTRUCT A NEW CAPBEAM AS SHOWN ON DWG. NO. ST1-14 AND ST1-15.

THESE AREAS TO BE REPAIRED UNDER ITEM 582.06

THESE CRACKS TO BE REPAIRED UNDER ITEM 582.07

LEGEND

- C-X — CORE LOCATION
- XX — PHOTO LOCATION
- DELAMINATION
- SPALLING
- CRACK
- MAP CRACKING
- MOISTURE

ALL ELEVATIONS ARE IN METERS
ALL DIMENSIONS ARE IN mm UNLESS OTHERWISE NOTED

AS BUILT REVISIONS

SIGNATURE DATE

INTERSTATE 81 SB
OVER
ROUTE 173

PIER 1 PLAN AND ELEVATION
(1 OF 2)

STATE OF NEW YORK
DEPARTMENT OF TRANSPORTATION

DOCUMENT NAME	REGION	DATE	DRAWING NO.

FED ROAD REG. NO.	STATE	CONTRACT NO.	SHEET NO.	TOTAL SHEETS
1	N.Y.	D259778	127	204

P.I.N. 350145 B.I.N. 1031501

ONONDAGA COUNTY

INTERSTATE ROUTE 505, SH 64-07

INTERSTATE 81 OVER ROUTE 173

CITY OF SYRACUSE

DRAFTED BY M. CONRAD CHECKED BY G. WEISS

ESTIMATED BY

DESIGNED BY G.WEISS

JOB MANAGER R. SINGH

DESIGN SUPERVISOR M. SANSAC

CHECKED BY R. SINGH

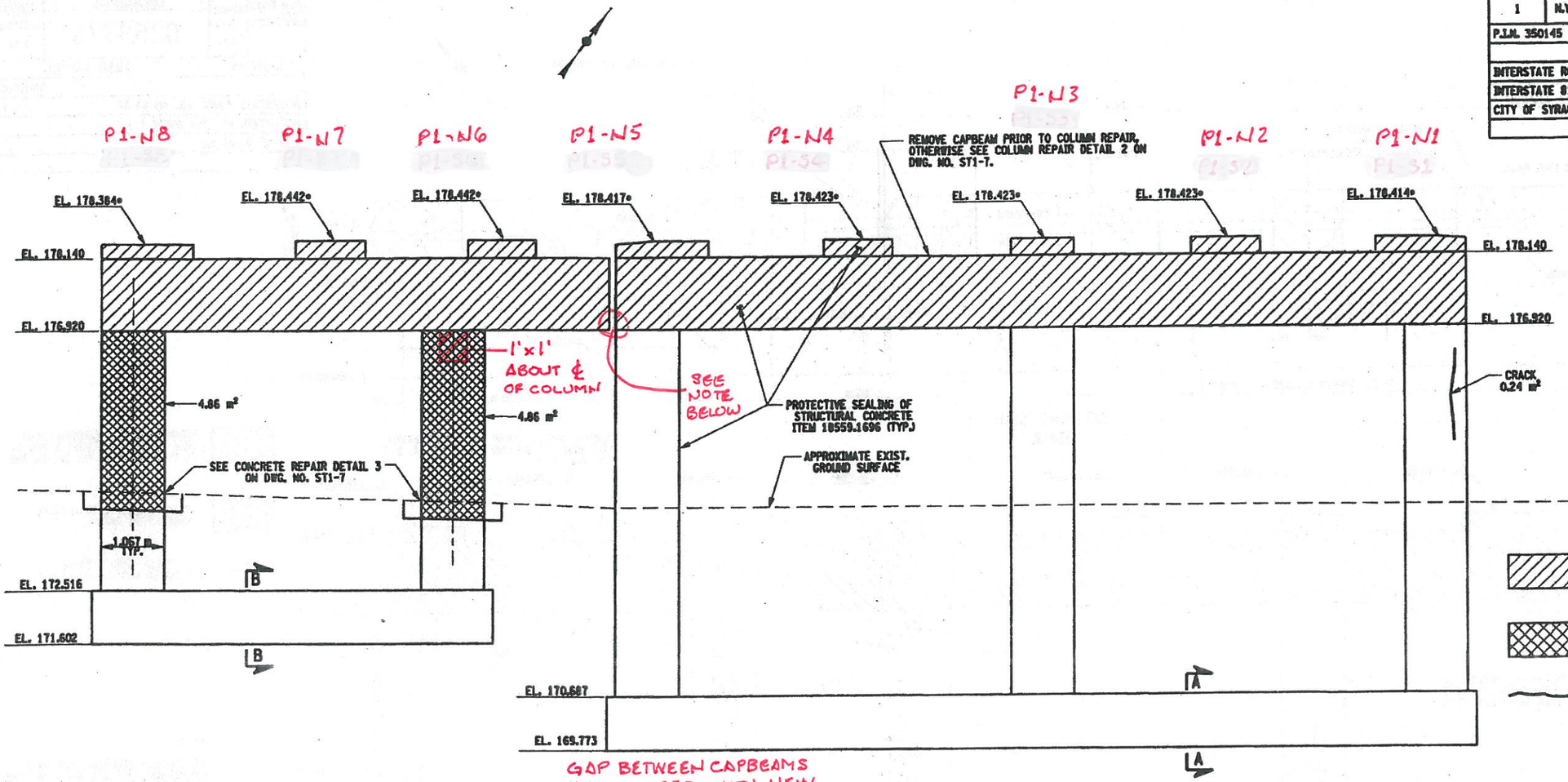

GAP BETWEEN CAPBEAMS WAS CLOSED WITH NEW RECONSTRUCTED CAPBEAM (TYP ALL PIERS)

EXISTING ELEVATION
PIER 1 NORTH FACE

• PEDESTAL ELEVATIONS FROM RECORD PLANS, CONVERTED TO METRIC

LEGEND

- C-X — CORE LOCATION
- XX — PHOTO LOCATION
- DELAMINATION
- SPALLING
- CRACK
- MAP CRACKING
- MOISTURE

REMOVE EXISTING CAPBEAM UNDER ITEM 580.01. CONSTRUCT A NEW CAPBEAM AS SHOWN ON DWG. NO. ST1-14 AND ST1-15.

THESE AREAS TO BE REPAIRED UNDER ITEM 582.06

THESE CRACKS TO BE REPAIRED UNDER ITEM 582.07

NOTES:

ALL EXPOSED PEDESTAL, CAP BEAM AND COLUMN SURFACES SHALL RECEIVE THE PROTECTIVE SEALING.

ALL EXISTING COLUMN REINFORCEMENT (INCLUDING TIES AND SPIRALS) IS TO REMAIN FOR USE IN THE PROPOSED CAPBEAM.

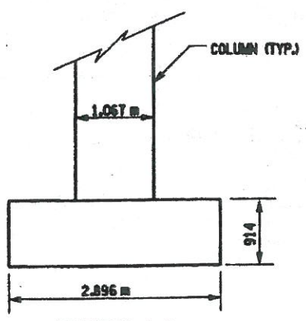

SECTION A-A

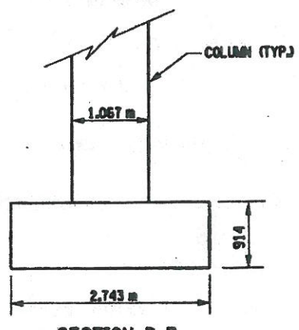

SECTION B-B

ALL ELEVATIONS ARE IN METERS
ALL DIMENSIONS ARE IN mm UNLESS OTHERWISE NOTED

AS BUILT REVISIONS

SIGNATURE DATE

INTERSTATE 81 SB
OVER
ROUTE 173

PIER 1 PLAN AND ELEVATION (2 OF 2)

STATE OF NEW YORK
DEPARTMENT OF TRANSPORTATION

DOCUMENT NAME	REGION	DATE	DRAWING NO.
350145AA_P1K.DGN	03	10/04	ST1-9

FED ROAD REG. NO.	STATE	CONTRACT NO.	SHEET NO.	TOTAL SHEETS
1	N.Y.	D259778	128	204

P.I.N. 350145 | B.I.N. 1031501

ONONDAGA COUNTY

INTERSTATE ROUTE 505, SH 64-07

INTERSTATE 81 OVER ROUTE 173

CITY OF SYRACUSE

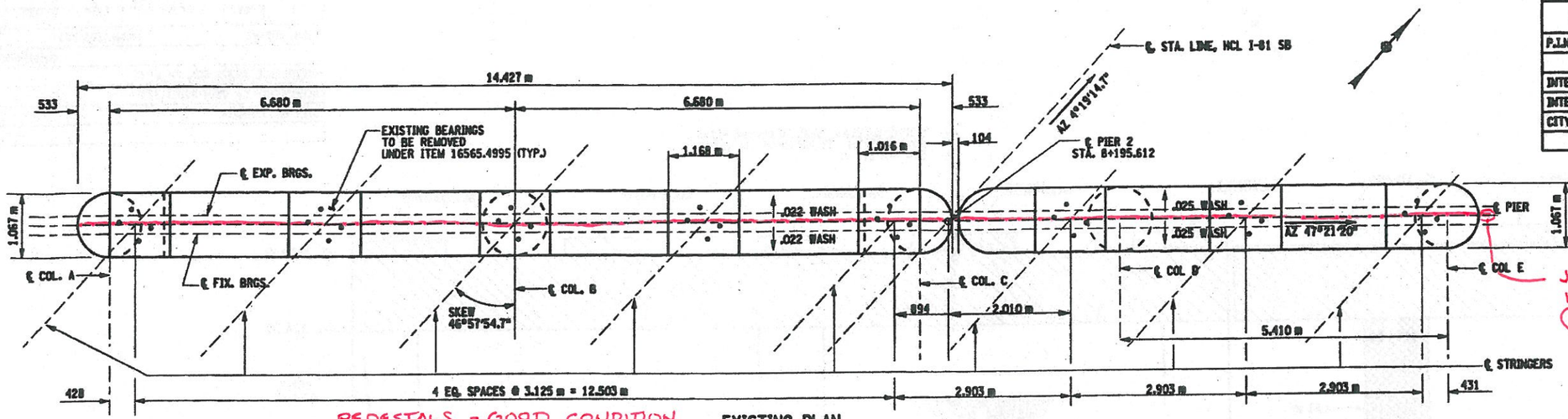

UNDER DECK
JOINT HEAVY SALT STAIN
HAUNCHES SPALLING, CRACKED
(TYP. FULL WIDTH)
OF BRIDGE

EXISTING PLAN
PIER 2

PEDESTALS - GOOD CONDITION
SALT STAINED
BEARINGS - SALT STAINED, LEAKING JOINT

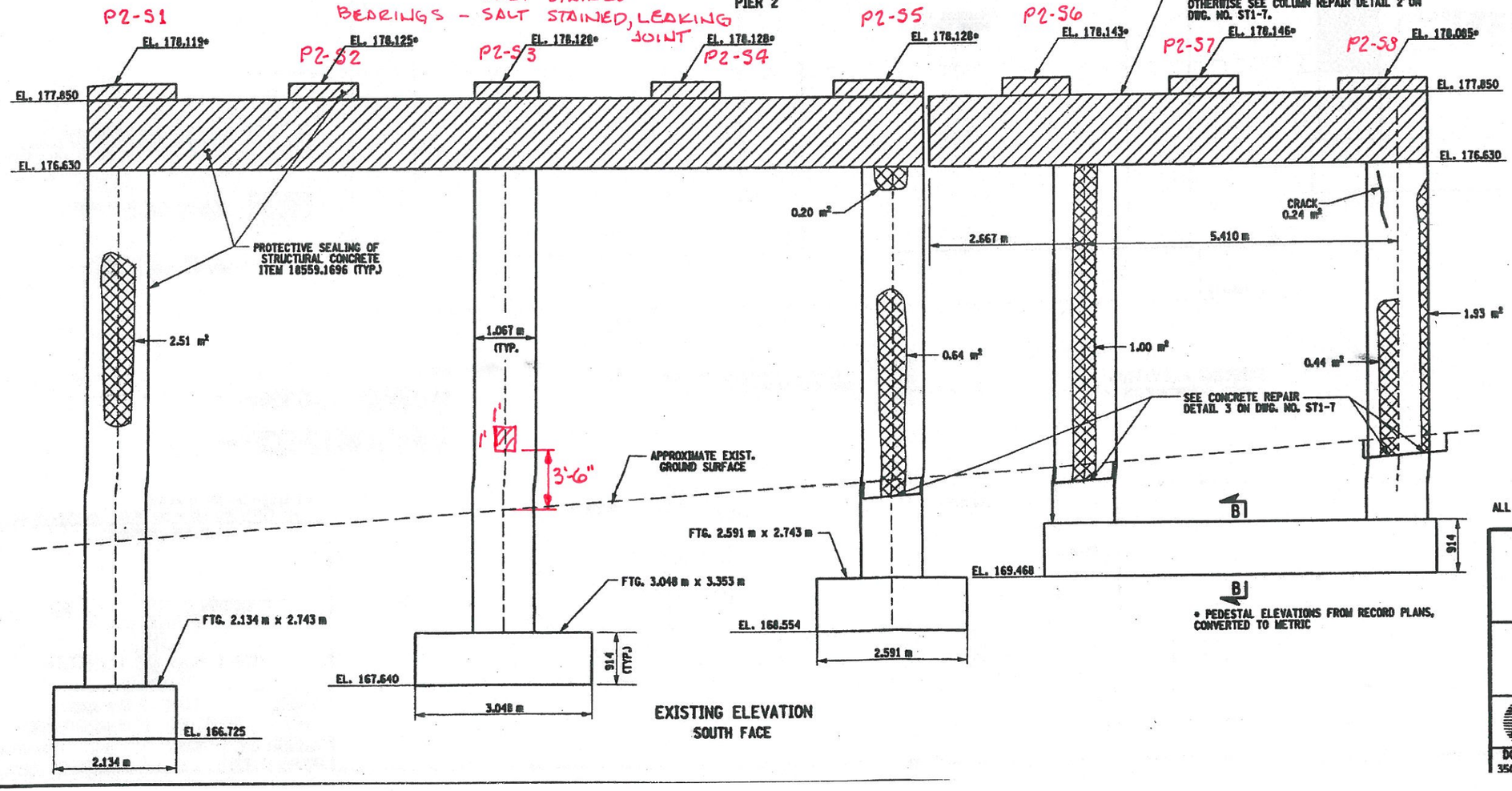

EXISTING ELEVATION
SOUTH FACE

* PEDESTAL ELEVATIONS FROM RECORD PLANS, CONVERTED TO METRIC

REMOVE EXISTING CAPBEAM UNDER ITEM 580.01. CONSTRUCT A NEW CAPBEAM AS SHOWN ON DWG. NO. ST1-16 AND ST1-17.

THESE AREAS TO BE REPAIRED UNDER ITEM 582.06

THESE CRACKS TO BE REPAIRED UNDER ITEM 582.07

LEGEND

- C-X CORE LOCATION
- XX PHOTO LOCATION
- DELAMINATION
- SPALLING
- CRACK
- MAP CRACKING
- MOISTURE

ALL ELEVATIONS ARE IN METERS
ALL DIMENSIONS ARE IN mm UNLESS OTHERWISE NOTED

AS BUILT REVISIONS

SIGNATURE | DATE

INTERSTATE 81 SB
OVER
ROUTE 173

PIER 2 PLAN AND ELEVATION
(1 OF 2)

STATE OF NEW YORK
DEPARTMENT OF TRANSPORTATION

DOCUMENT NAME	REGION	DATE	DRAWING NO.
350145AA_P1B.DGN	03	10/04	ST1-10

DESIGN SUPERVISOR W. SARNAG | JOB MANAGER R. SINGH | DESIGNED BY G. WEISS | CHECKED BY R. SINGH | ESTIMATED BY | DRAFTED BY W. CONRAD | CHECKED BY G. WEISS

FED ROAD REG. NO.	STATE	CONTRACT NO.	SHEET NO.	TOTAL SHEETS
1	N.Y.	D259778	129	204

P.I.N. 350145 B.I.N. 1031501

ONONDAGA COUNTY

INTERSTATE ROUTE 505, SH 64-07

INTERSTATE 81 OVER ROUTE 173

CITY OF SYRACUSE

ESTIMATED BY ____ DRAFTED BY M. CONRAD CHECKED BY G. WEISS

DESIGN SUPERVISOR M. SABBAG JOB MANAGER R. SINGH DESIGNED BY G. WEISS CHECKED BY R. SINGH

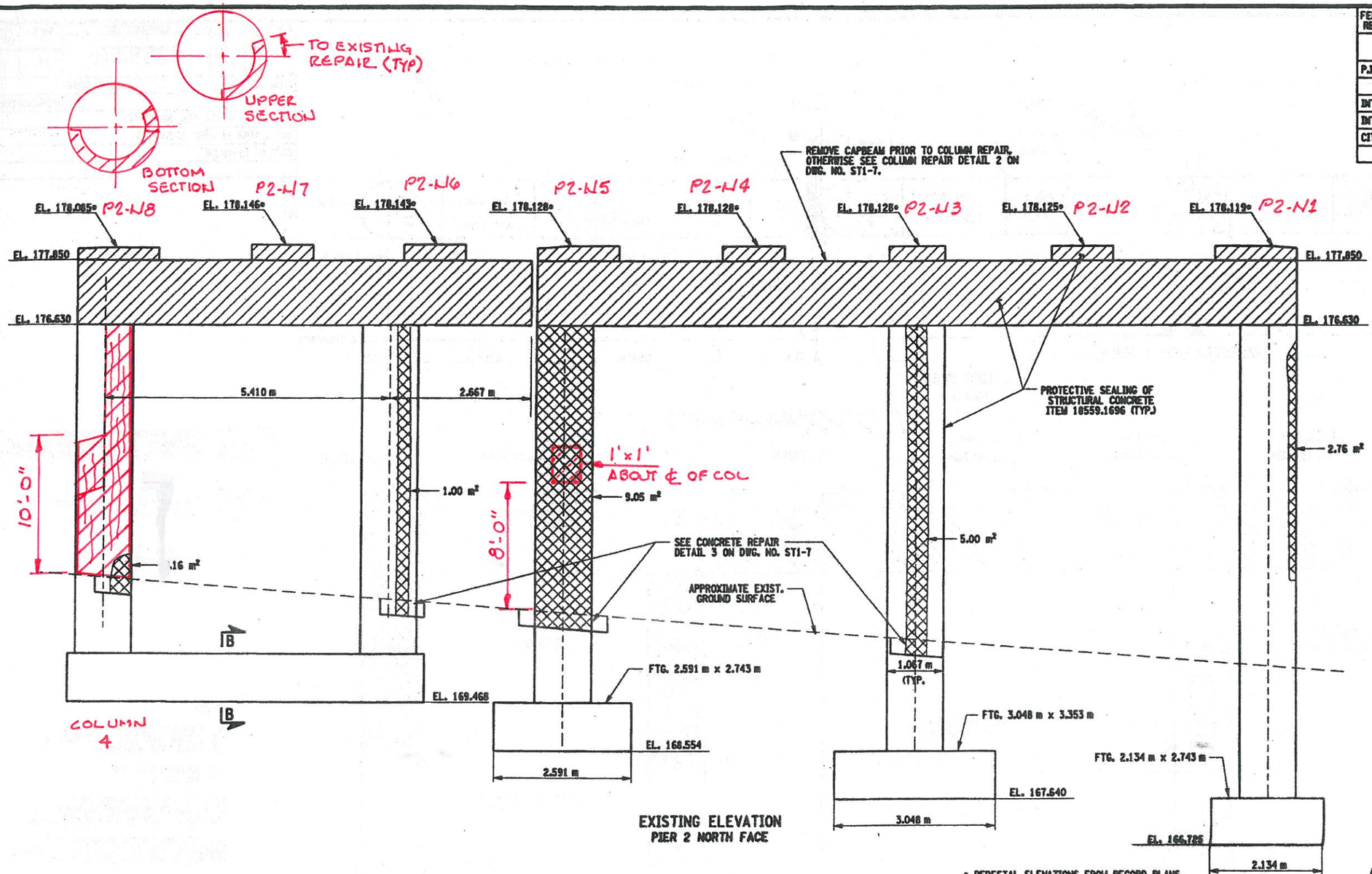

EXISTING ELEVATION
PIER 2 NORTH FACE

LEGEND

- C-X — CORE LOCATION
- XX — PHOTO LOCATION
- DELAMINATION
- SPALLING
- CRACK
- MAP CRACKING
- MOISTURE

NOTES:

ALL EXPOSED PEDESTAL, CAP BEAM AND COLUMN SURFACES SHALL RECEIVE THE PROTECTIVE SEALING.

FOR SECTION B-B, SEE DWG. NO. ST1-9.

FOOTING SIZES ARE SHOWN ONLY AS AN AID TO DETERMINE POSSIBLE USE FOR STRUCTURAL LIFTING OPERATIONS.

ALL EXISTING COLUMN REINFORCEMENT (INCLUDING TIES AND SPIRALS) IS TO REMAIN FOR USE IN THE PROPOSED CAPBEAM.

ALL ELEVATIONS ARE IN METERS
ALL DIMENSIONS ARE IN mm UNLESS OTHERWISE NOTED

• PEDESTAL ELEVATIONS FROM RECORD PLANS, CONVERTED TO METRIC

REMOVE EXISTING CAPBEAM UNDER ITEM 580.01. CONSTRUCT A NEW CAPBEAM AS SHOWN ON DWG. NO. ST1-16 AND ST1-17.

THESE AREAS TO BE REPAIRED UNDER ITEM 582.06

THESE CRACKS TO BE REPAIRED UNDER ITEM 582.07

AS BUILT REVISIONS

SIGNATURE DATE

INTERSTATE 81 SB
OVER
ROUTE 173
PIER 2 PLAN AND ELEVATION
(2 OF 2)

STATE OF NEW YORK
DEPARTMENT OF TRANSPORTATION

DOCUMENT NAME	REGION	DATE	DRAWING NO.
350145AA_P1L.DGN	03	10/04	ST1-11

FED ROAD REG. NO.	STATE	CONTRACT NO.	SHEET NO.	TOTAL SHEETS
1	N.Y.	D259778	130	204

P.I.N. 350145 | B.I.N. 1031501

ONONDAGA COUNTY

INTERSTATE ROUTE 505, SH 64-07

INTERSTATE 81 OVER ROUTE 173

CITY OF SYRACUSE

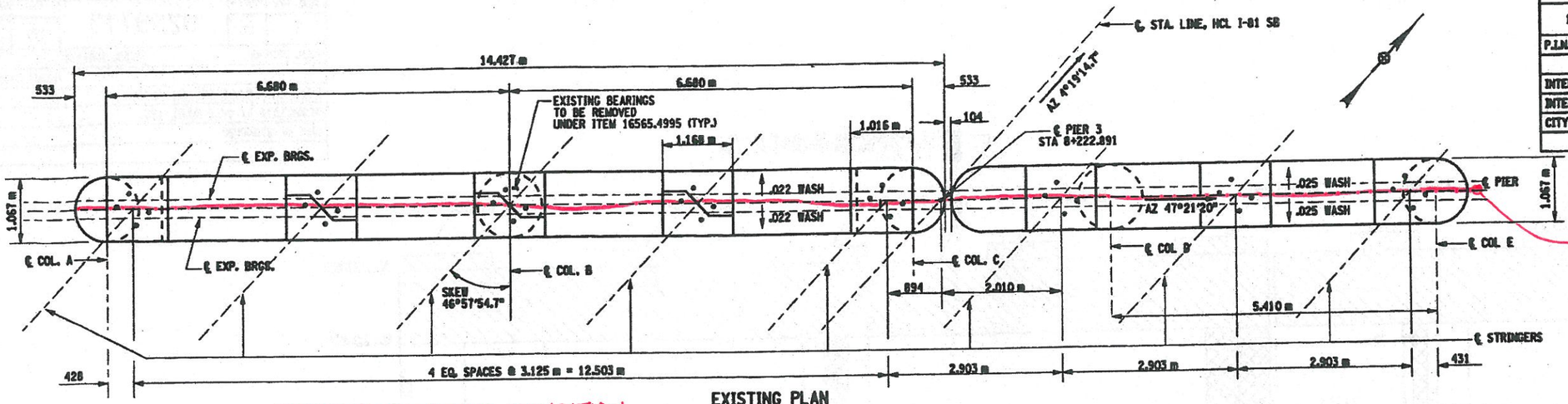

UNDER DECK
JOINT DECK HAUNCHES SPALLED, CRACKED EXPOSED REINF (TYP. FULL WIDTH) OF BRIDGE

EXISTING PLAN
PIER 3

PEDESTALS - GOOD CONDITION
BEARINGS - SALT STAINED, LEAKING JOINTS

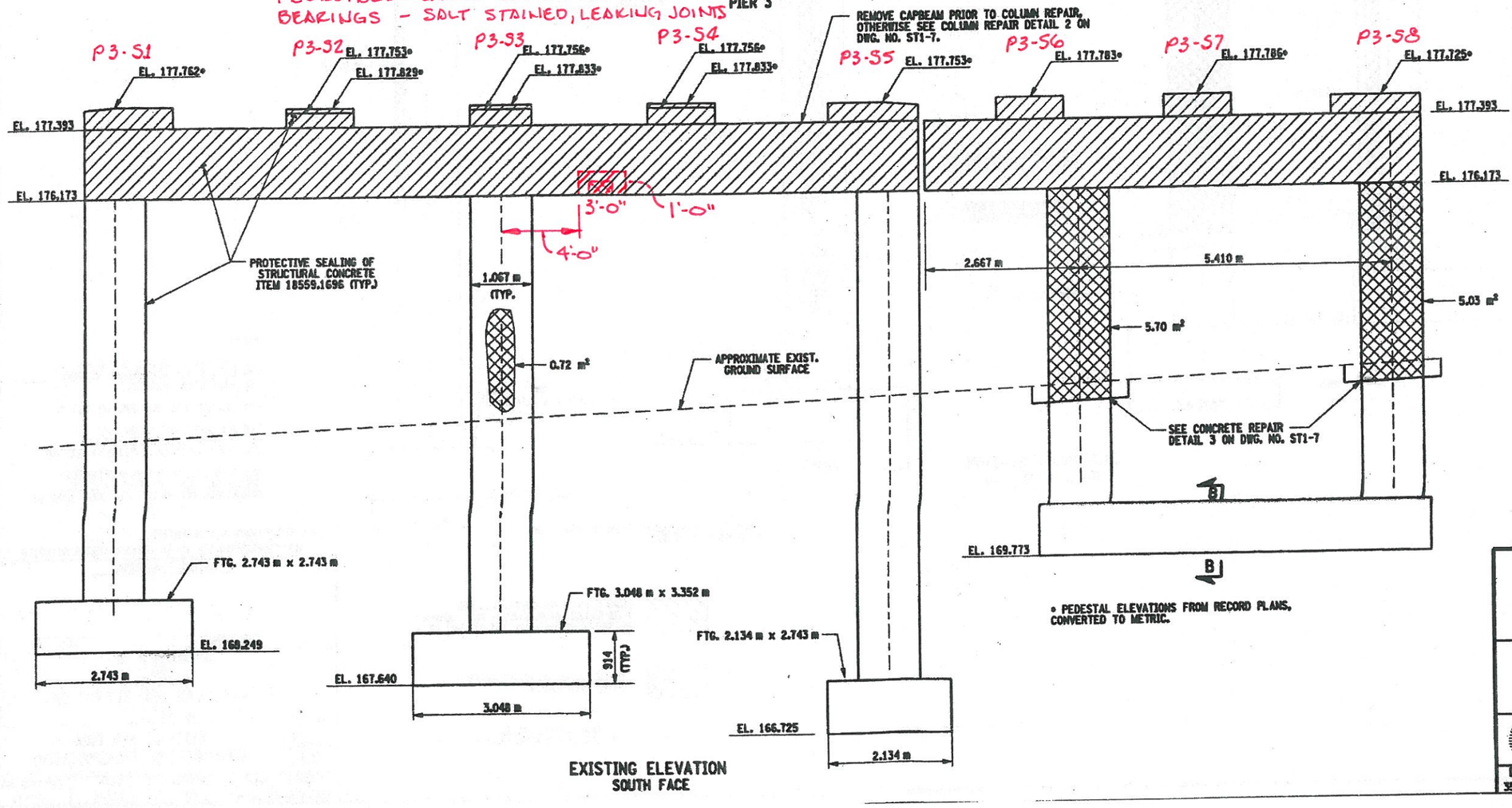

* PEDESTAL ELEVATIONS FROM RECORD PLANS, CONVERTED TO METRIC.

EXISTING ELEVATION
SOUTH FACE

REMOVE EXISTING CAPBEAM UNDER ITEM 580.01. CONSTRUCT A NEW CAPBEAM AS SHOWN ON DWG. NO. ST1-18 AND ST1-19.

THESE AREAS TO BE REPAIRED UNDER ITEM 582.06

THESE CRACKS TO BE REPAIRED UNDER ITEM 582.07

LEGEND

- C-X CORE LOCATION
- XX PHOTO LOCATION
- DELAMINATION
- SPALLING
- CRACK
- MAP CRACKING
- MOISTURE

ALL ELEVATIONS ARE IN METERS
ALL DIMENSIONS ARE IN mm UNLESS OTHERWISE NOTED

AS BUILT REVISIONS

SIGNATURE | DATE

INTERSTATE 81 SB
OVER
ROUTE 173

PIER 3 PLAN AND ELEVATION
(1 OF 2)

STATE OF NEW YORK
DEPARTMENT OF TRANSPORTATION

DOCUMENT NAME	REGION	DATE	DRAWING NO.
350145AA_P1C.DGN	03	10/04	ST1-12

DESIGN SUPERVISOR W. SANDING — JOB MANAGER R. SINGH — DESIGNED BY G. WEISS — CHECKED BY R. SINGH — ESTIMATED BY — DRAFTED BY W. CONRAD — CHECKED BY G. WEISS

FED ROAD REG. NO.	STATE	CONTRACT NO.	SHEET NO.	TOTAL SHEETS
1	N.Y.	D259778	131	204

P.I.N. 350145 | B.I.N. 1031501

ONONDAGA COUNTY

INTERSTATE ROUTE 505, SH 64-07

INTERSTATE 81 OVER ROUTE 173

CITY OF SYRACUSE

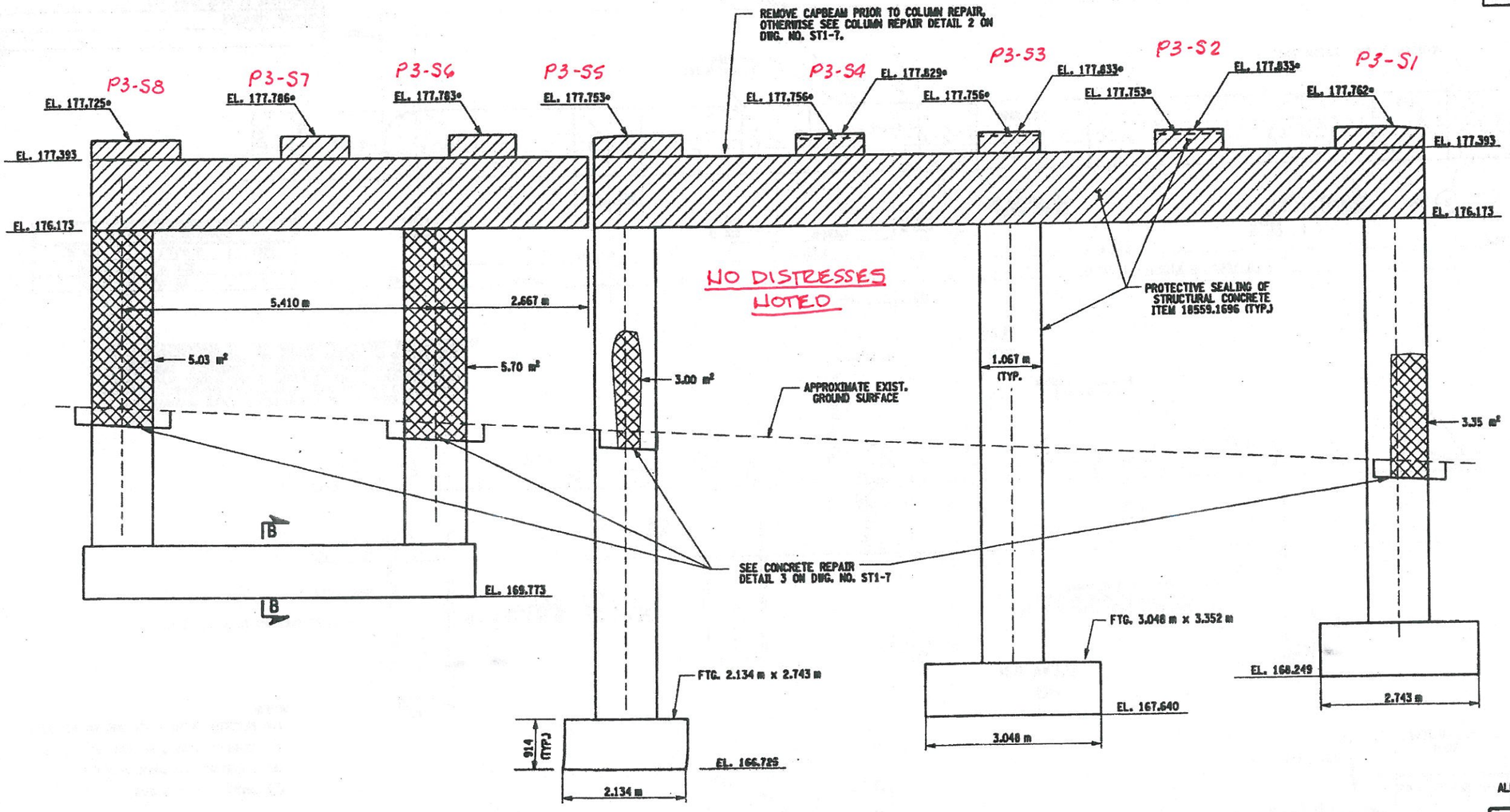

EXISTING ELEVATION
PIER 3 NORTH FACE

* PEDESTAL ELEVATIONS FROM RECORD PLANS, CONVERTED TO METRIC.

REMOVE EXISTING CAPBEAM UNDER ITEM 580.01. CONSTRUCT A NEW CAPBEAM AS SHOWN ON DWG. NO. ST1-18 AND ST1-19.

THESE AREAS TO BE REPAIRED UNDER ITEM 582.06

THESE CRACKS TO BE REPAIRED UNDER ITEM 582.07

LEGEND

- C-X CORE LOCATION
- XX PHOTO LOCATION
- DELAMINATION
- SPALLING
- CRACK
- MAP CRACKING
- MOISTURE

ALL ELEVATIONS ARE IN METERS
ALL DIMENSIONS ARE IN mm UNLESS OTHERWISE NOTED

AS BUILT REVISIONS

SIGNATURE | DATE

INTERSTATE 81 SB
OVER
ROUTE 173

PIER 3 PLAN AND ELEVATION
(2 OF 2)

STATE OF NEW YORK
DEPARTMENT OF TRANSPORTATION

DOCUMENT NAME	REGION	DATE	DRAWING NO.
350145AA_P1M.DGN	03	10/04	ST1-13

DESIGN SUPERVISOR W. SABBAG — JOB MANAGER R. SINGH — DESIGNED BY G. WEISS — CHECKED BY R. SINGH — ESTIMATED BY — DRAFTED BY W. CONRAD — CHECKED BY G. WEISS

FED ROAD REG. NO.	STATE	CONTRACT NO.	SHEET NO.	TOTAL SHEETS
1	N.Y.	D259778	139	204
P.I.N. 350145		B.I.N. 1031501		
ONONDAGA COUNTY				
INTERSTATE ROUTE 505, SN 64-07				
INTERSTATE 81 OVER ROUTE 173				
CITY OF SYRACUSE				

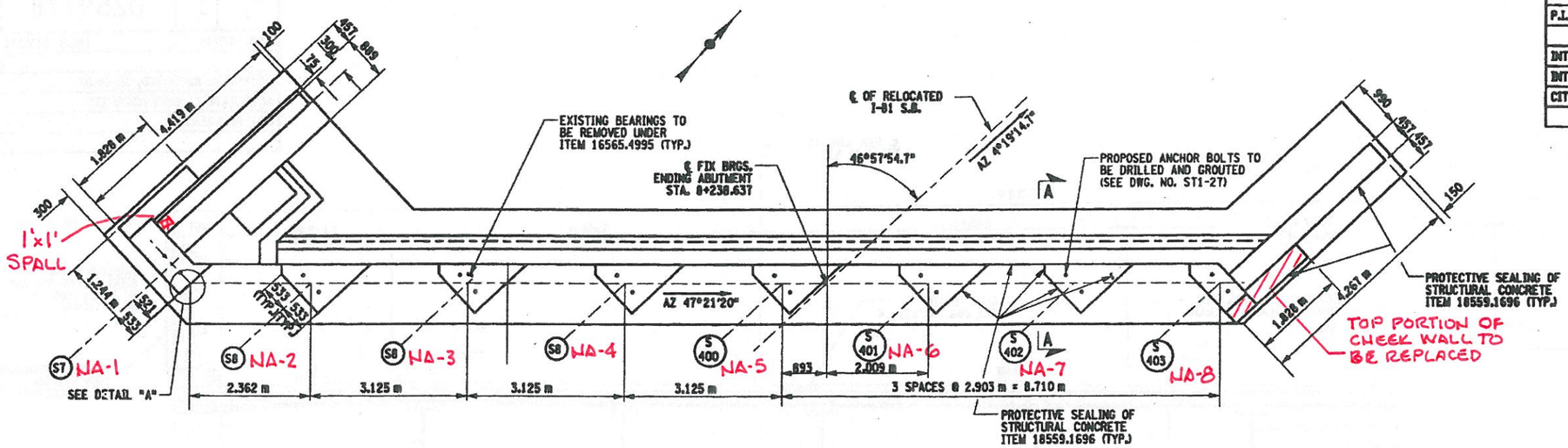

EXISTING PLAN

NOTE:
ALL STRINGERS ARE PARALLEL TO ℄ OF I-81 S.B.

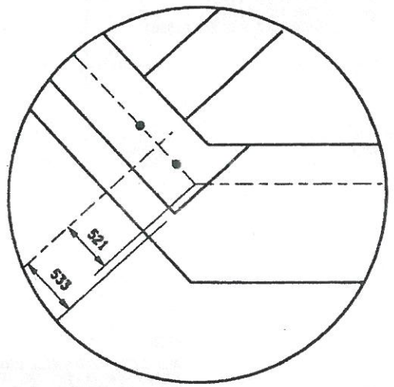

DETAIL "A"
NO SCALE

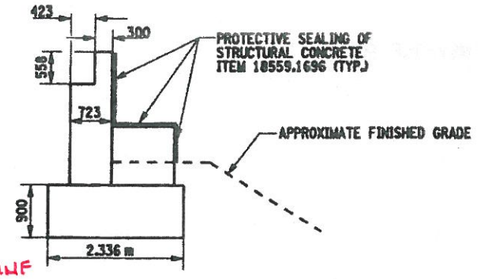

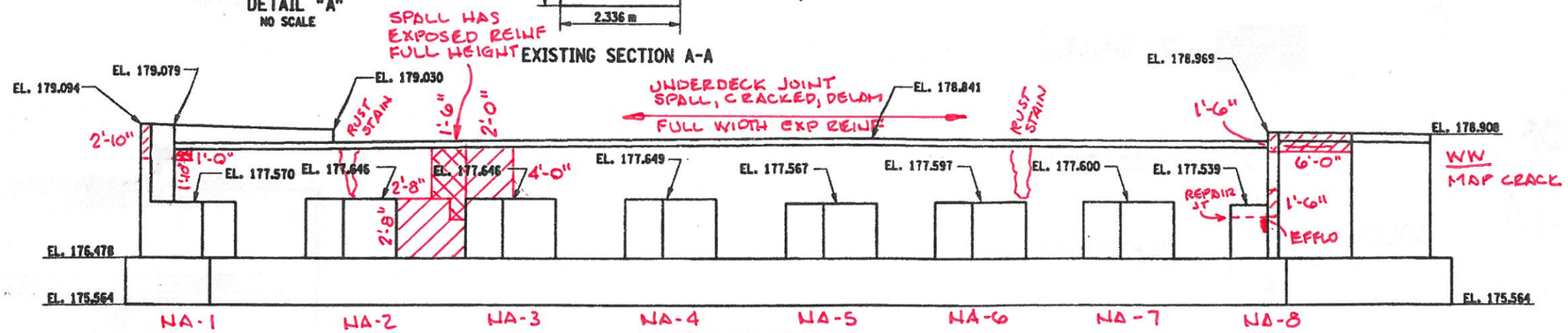

EXISTING ELEVATION

EXISTING SECTION A-A

LEGEND

- C-X — CORE LOCATION
- XX — PHOTO LOCATION
- DELAMINATION
- SPALLING
- CRACK
- MAP CRACKING
- MOISTURE

ALL ELEVATIONS ARE IN METERS
ALL DIMENSIONS ARE IN mm UNLESS OTHERWISE NOTED

AS BUILT REVISIONS

SIGNATURE _____ DATE _____

INTERSTATE 81 SB
OVER
ROUTE 173

ENDING ABUTMENT PLAN AND ELEVATION

STATE OF NEW YORK
DEPARTMENT OF TRANSPORTATION

DOCUMENT NAME	REGION	DATE	DRAWING NO.
350145AA_A1B.DGN	03	10/04	ST1-21

DESIGN SUPERVISOR B. SABBAG JOB MANAGER R. SINGH DESIGNED BY G.WEISS ESTIMATED BY _____ DRAFTED BY B. CONRAD CHECKED BY R. SINGH CHECKED BY G. WEISS

FED ROAD REG. NO.	
1	
P.I.N. 3501	
INTERSTATE	
INTERSTATE	
CITY OF SY	

LEGEND

- CORE LOCATION (C-X)
- PHOTO LOCATION (XX)
- DELAMINATION
- SPALLING
- CRACK
- MAP CRACKING
- MOISTURE

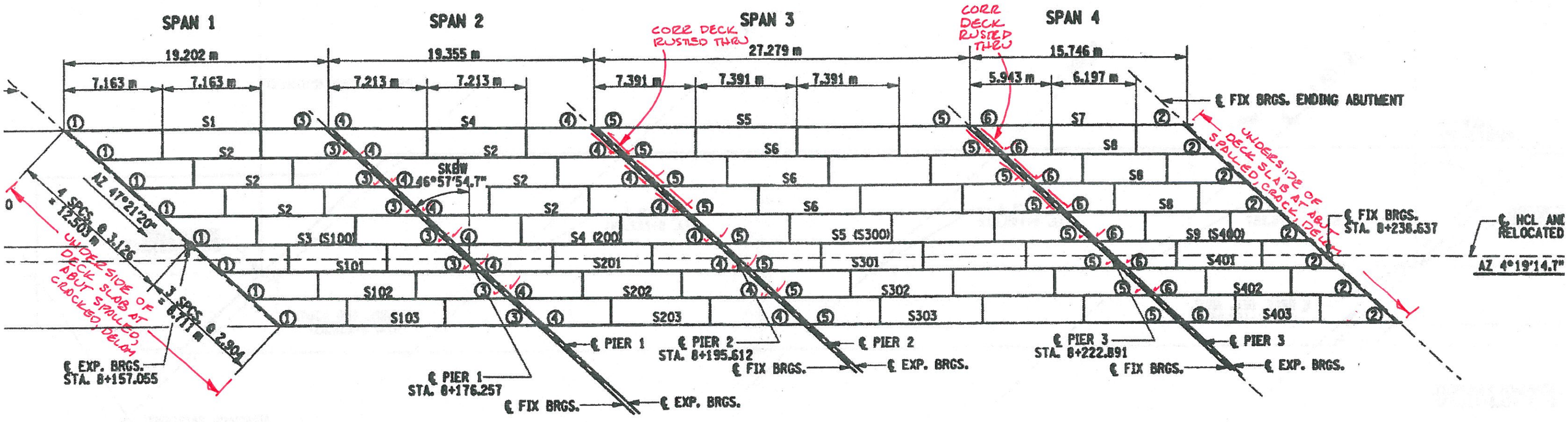

EXISTING FRAMING PLAN

WELD INSPECTION

ER	HORIZONTAL DISTANCE	NUMBER	SIZE OF	COVER

SPECIAL NOTE:

NO SUBSTRUCTURE CONCRETE REMOVAL AND REPLACEMENT WORK SHALL COMMENCE UNTIL ALL STRUCTURAL LIFTING IS IN PLACE AT THAT

NOTES:

1. STRINGERS WHEN BRI WERE ADD
2. ALL STRI
3. PERPENDIC BEARINGS

IN-DEPTH PHOTO DOCUMENTATION

C&S Engineers, Inc.
499 Col. Eileen Collins Blvd.
Syracuse, New York 13212
Phone: (315) 455-2000
Fax: (315) 455-9667
www.cscos.com

I-81 SB over NYS Rte 173 – BIN 1031501



DESCRIPTION: SOUTH ABUTMENT – ELEVATION – LOOKING SOUTHWEST – CONTAINS CRACKS AND SPALLS

PHOTO 1



DESCRIPTION: SOUTH ABUTMENT – PEDESTAL 2 – TYPICAL – BACKWALL SALT-STAINED AND RUST-STAINED

PHOTO 2

C&S Engineers, Inc.
499 Col. Eileen Collins Blvd.
Syracuse, New York 13212
Phone: (315) 455-2000
Fax: (315) 455-9667
www.cscos.com

I-81 SB over NYS Rte 173 – BIN 1031501



DESCRIPTION: SOUTH ABUTMENT – BEARING 5 – TYPICAL

PHOTO 3



DESCRIPTION: SOUTH ABUTMENT – BACKWALL – BEHIND PEDESTAL 3 – SALT ACCUMULATION FROM LEAKING DECK JOINT – DELAMINATED CONCRETE

PHOTO 4

C&S Engineers, Inc.
499 Col. Eileen Collins Blvd.
Syracuse, New York 13212
Phone: (315) 455-2000
Fax: (315) 455-9667
www.cscos.com

I-81 SB over NYS Rte 173 – BIN 1031501



DESCRIPTION: SOUTH ABUTMENT – UNDERSIDE OF DECK JOINT – DECK CONCRETE SPALLED AND JOINT LEAKING – TYPICAL ENTIRE JOINT

PHOTO 5



DESCRIPTION: SOUTH ABUTMENT – SOUTHWEST CHEEKWALL - TYPICAL

PHOTO 6

C&S Engineers, Inc.
499 Col. Eileen Collins Blvd.
Syracuse, New York 13212
Phone: (315) 455-2000
Fax: (315) 455-9667
www.cscos.com

I-81 SB over NYS Rte 173 – BIN 1031501



DESCRIPTION: PIER 1 – BEARING 8 – SALT ACCUMULATION – TYPICAL FASCIA BEARING

PHOTO 7



DESCRIPTION: PIER 1 – PEDESTAL 3 – SALT ACCUMULATION & RUST-STAINS – TYPICAL ALL PEDESTALS

PHOTO 8

C&S Engineers, Inc.
499 Col. Eileen Collins Blvd.
Syracuse, New York 13212
Phone: (315) 455-2000
Fax: (315) 455-9667
www.cscos.com

I-81 SB over NYS Rte 173 – BIN 1031501



DESCRIPTION: PIER 2 – PEDESTAL 8 – SALT AND ICE ACCUMULATION – GIRDERS RUSTED – TYPICAL FASCIA BEARINGS

PHOTO 9



DESCRIPTION: PIER 2 – BAY 3 – CAP BEAM – DEBRIS ACCUMULATION

PHOTO 10

C&S Engineers, Inc.
499 Col. Eileen Collins Blvd.
Syracuse, New York 13212
Phone: (315) 455-2000
Fax: (315) 455-9667
www.cscos.com

I-81 SB over NYS Rte 173 – BIN 1031501



DESCRIPTION: PIER 3 – PEDESTAL 3 – SALT ACCUMULATION ON CONCRETE – LEAKING DECK JOINT ABOVE

PHOTO 11



DESCRIPTION: PIER 3 – SOUTH FACE – DELAMINATED CONCRETE WITH SPALL – BETWEEN PEDESTALS 3 & 4

PHOTO 12

C&S Engineers, Inc.
499 Col. Eileen Collins Blvd.
Syracuse, New York 13212
Phone: (315) 455-2000
Fax: (315) 455-9667
www.cscos.com

I-81 SB over NYS Rte 173 – BIN 1031501



DESCRIPTION: PIER 3 – BEARING 6 – SALT ACCUMULATION AND RUST BUILD-UP – TYPICAL BEARING 6 & FASCIA BEARINGS

PHOTO 13



DESCRIPTION: PIER 1 – SOUTH FACE – ELEVATION

PHOTO 14

C&S Engineers, Inc.
499 Col. Eileen Collins Blvd.
Syracuse, New York 13212
Phone: (315) 455-2000
Fax: (315) 455-9667
www.cscos.com

I-81 SB over NYS Rte 173 – BIN 1031501



DESCRIPTION: PIER 2 – SOUTH FACE – ELEVATION

PHOTO 15



DESCRIPTION: PIER 2 – SOUTH FACE – COLUMN 4 – ISOLATED DELAMINATED CONCRETE - TYPICAL

PHOTO 16

C&S Engineers, Inc.
499 Col. Eileen Collins Blvd.
Syracuse, New York 13212
Phone: (315) 455-2000
Fax: (315) 455-9667
www.cscos.com

I-81 SB over NYS Rte 173 – BIN 1031501



DESCRIPTION: PIER 3 – SOUTH FACE – ELEVATION

PHOTO 17



DESCRIPTION: SUPERSTRUCTURE – PIER 2 – BAY 3 – DIAPHRAGM CONNECTION – DELAMINATED PAINT & SALT ACCUMULATION - TYPICAL

PHOTO 18

C&S Engineers, Inc.
499 Col. Eileen Collins Blvd.
Syracuse, New York 13212
Phone: (315) 455-2000
Fax: (315) 455-9667
www.cscos.com

I-81 SB over NYS Rte 173 – BIN 1031501



DESCRIPTION: SUPERSTRUCTURE – SPAN 3 – DIAPHRAGM AND STAY-IN-PLACE FORMS – ISOLATED RUST AND SALT ACCUMULATION – TYPICAL

PHOTO 19



DESCRIPTION: SUPERSTRUCTURE – PIER 3 – PEDESTAL 8 – STAY-IN-PLACE FORM RUSTED AND SAGGING WITH SPALLED CONCRETE.

PHOTO 20

C&S Engineers, Inc.
499 Col. Eileen Collins Blvd.
Syracuse, New York 13212
Phone: (315) 455-2000
Fax: (315) 455-9667
www.cscos.com

I-81 SB over NYS Rte 173 – BIN 1031501



DESCRIPTION: SUPERSTRUCTURE – DECK JOINT – BAY 3 – PIER 3 – SPALLED CONCRETE WITH REINFORCING EXPOSURE - TYPICAL ALL DECK JOINTS

PHOTO 21



DESCRIPTION: SUPERSTRUCTURE – SPANS 3 & 4 – FASCIA – SALT AND MOISTURE STAINS

PHOTO 22

C&S Engineers, Inc.
499 Col. Eileen Collins Blvd.
Syracuse, New York 13212
Phone: (315) 455-2000
Fax: (315) 455-9667
www.cscos.com

I-81 SB over NYS Rte 173 – BIN 1031501



DESCRIPTION: SUPERSTRUCTURE - SPANS 1 & 2 – FASCIA – SALT AND MOISTURE STAINED

PHOTO 23



DESCRIPTION: SPAN 3 – BRIDGE RAIL – EXPANSION JOINTS CORRODED TO 100% SECTION LOSS IN ISOLATED AREAS

PHOTO 24

C&S Engineers, Inc.
499 Col. Eileen Collins Blvd.
Syracuse, New York 13212
Phone: (315) 455-2000
Fax: (315) 455-9667
www.cscos.com

I-81 SB over NYS Rte 173 – BIN 1031501



DESCRIPTION: NORTH ABUTMENT – PEDESTALS 1 THRU 5 – SALT ACCUMULATION AND ISOLATED SPALLED CONCRETE

PHOTO 25



DESCRIPTION: NORTH ABUTMENT – PEDESTALS 4 THRU 8 – SALT ACCUMULATION – ISOLATED SPALLED CONCRETE

PHOTO 26

C&S Engineers, Inc.
499 Col. Eileen Collins Blvd.
Syracuse, New York 13212
Phone: (315) 455-2000
Fax: (315) 455-9667
www.cscos.com

I-81 SB over NYS Rte 173 – BIN 1031501



DESCRIPTION: NORTH ABUTMENT – LEFT CHEEKWALL – DELAMINATED CONCRETE WITH VERTICAL CRACK

PHOTO 27



DESCRIPTION: NORTH ABUTMENT – LEFT CHEEKWALL – BRIDGE FASIA – BACKWALL – DELAINATED CONCRETE WITH CRACKS

PHOTO 28

C&S Engineers, Inc.
499 Col. Eileen Collins Blvd.
Syracuse, New York 13212
Phone: (315) 455-2000
Fax: (315) 455-9667
www.cscos.com

I-81 SB over NYS Rte 173 – BIN 1031501



DESCRIPTION: NORTH ABUTMENT – BEARING 1 – GIRDER RUSTED WITH SALT ACCUMULATION – TYPICAL ALL FASCIA BEARINGS

PHOTO 29



DESCRIPTION: NORTH ABUTMENT – DECK JOINT – BAY 1 – SPALLED CONCRETE – TYPICAL ENTIRE DECK JOINT

PHOTO 30

C&S Engineers, Inc.
499 Col. Eileen Collins Blvd.
Syracuse, New York 13212
Phone: (315) 455-2000
Fax: (315) 455-9667
www.cscos.com

I-81 SB over NYS Rte 173 – BIN 1031501



DESCRIPTION: NORTH ABUTMENT – PEDSTAL 2 – TYPICAL ALL PEDESTALS

PHOTO 31



DESCRIPTION: NORTH ABUTMENT – BACKWALL – BAY 2 – SPALLED CONCRETE – TYPICAL

PHOTO 32

C&S Engineers, Inc.
499 Col. Eileen Collins Blvd.
Syracuse, New York 13212
Phone: (315) 455-2000
Fax: (315) 455-9667
www.cscos.com

I-81 SB over NYS Rte 173 – BIN 1031501



DESCRIPTION: NORTH ABUTMENT – DECK JOINT – SALT ACCUMULATION – SPALLED CONCRETE WITH EXPOSED REBAR

PHOTO 33

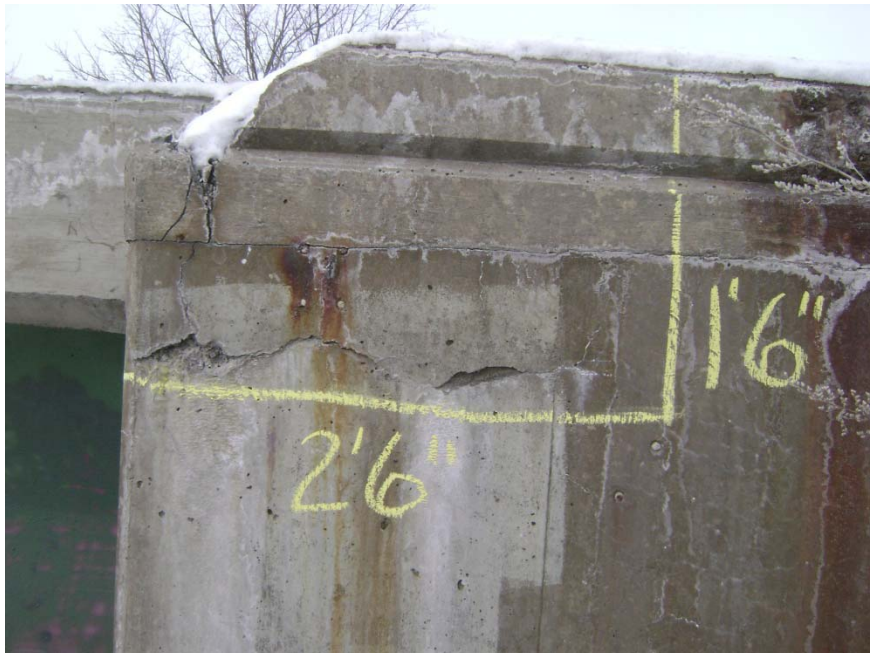

DESCRIPTION: NORTH ABUTMENT – RIGHT CHEEK WALL – DELAMINATED AND SPALLED CONCRETE

PHOTO 34

C&S Engineers, Inc.
499 Col. Eileen Collins Blvd.
Syracuse, New York 13212
Phone: (315) 455-2000
Fax: (315) 455-9667
www.cscos.com

I-81 SB over NYS Rte 173 – BIN 1031501



DESCRIPTION: BRIDGE ELEVATION – SPANS 1, 2 & 3

PHOTO 35



DESCRIPTION: BRIDGE ELEVATION – SPANS 3 & 4

PHOTO 36

C&S Engineers, Inc.
499 Col. Eileen Collins Blvd.
Syracuse, New York 13212
Phone: (315) 455-2000
Fax: (315) 455-9667
www.cscos.com

I-81 SB over NYS Rte 173 – BIN 1031501



DESCRIPTION: BRIDGE DECK – FACING NORTH

PHOTO 37



DESCRIPTION: BRIDGE DECK – FACING SOUTH

PHOTO 38

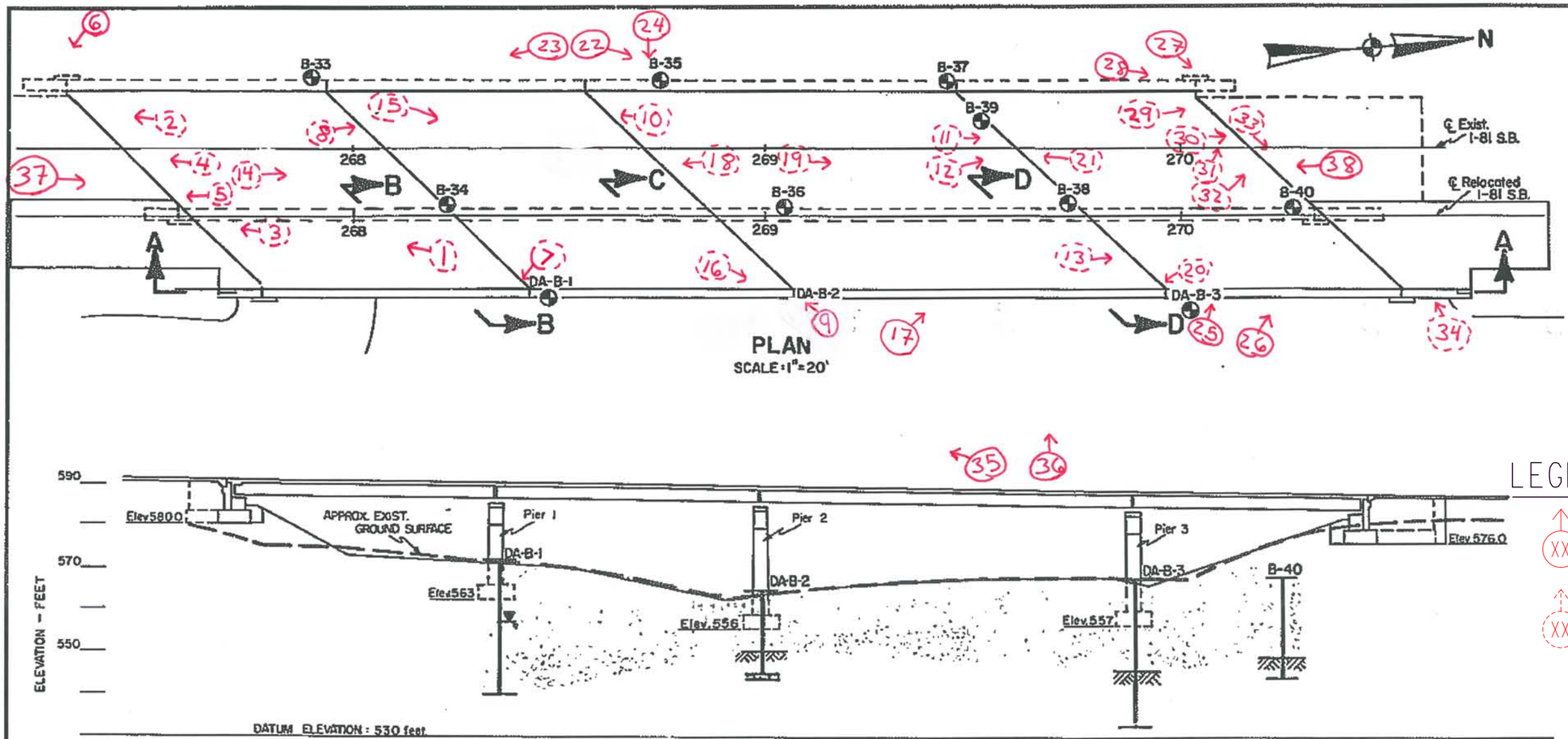

LEGEND

XX PHOTO LOCATION

XX HIDDEN PHOTO LOCATION

BIN 1031501
I-81 OVER RTE 173
PHOTO LOCATION MAP

ASBESTOS DOCUMENTATION

ASBESTOS DOCUMENTATION FROM WATTS ARCHITECTURE & ENGINEERING, INC.

(WILL REPLACE BIN FOLDER ASBESTOS REPORT UPON COMPLETION)

HUDSON ENVIRONMENTAL SERVICES, INC.
Mail: 22 Hudson Falls Rd., So. Glens Falls, NY 12803
Delivery: 211 Ferry Blvd., So. Glens Falls, NY 12803
Phone: 518/747-1060 Fax: 518/747-1062

3

ANALYTICAL TEST RESULTS
N.Y.S.D.O.H. LAB ID#11140
*ANALYZED BY N.Y.S.D.O.H. LAB ID#10898

CLIENT: NYSDOT Region 3

SAMPLE DESCRIPTION: See Below

MATRIX: Solid

LOCATION: BIN 1031501

H.E.S. #: See Below

DATE SAMPLED: 05/05/03

TIME SAMPLED: Not Specified

DATE SAMPLE RECD: 05/28/03

TYPE SAMPLE: Grab

SAMPLER: W.Kirk/NYSDOT Region 3

NOB BULK MATERIAL ANALYSIS FOR ASBESTOS

TEST METHOD:EPA-600 93/116 JULY 1993 NYSDOH ELAP 198.1 AND 198.4

HES LAB ID#: 030528G	G01	G02	G03
LAB ID#: E03	1380	1381	1382
CLIENT: SAMPLE ID/DESCRIPTION	1031501-01 G-8 Beg Abut	1031501-02 G-1 Span 2 @ Pier 1	1031501-03 G-8 @ End Abut
COLOR	Green	Green	Green
HOMOGENEOUS(YES/NO)	Yes	Yes	Yes
ORGANIC %	33	35	33
ACID-SOLUBLE INORGANICS %	12	12	17
INSOL NON-ASBESTOS INORGANIC %	45	43	50
ASBESTOS ANALYSIS			
CHRYSOTILE %			
AMOSITE %			
CROCIDOLITE %			
OTHER AMPHIBOLE %			
TOTAL ASBESTOS % (PLM)	ND	ND	ND
ASBESTOS ANALYSIS			
TYPE OF ASBESTOS			
PERCENTAGE OF ASBESTOS (TEM)	ND	ND	ND
TOTAL	100	100	100

Approval By: MHayl

Date: 6/12/03

Hudson Environmental Services, Inc. certifies that the services provided were performed in accordance with the New York State Department of Health, Environmental Laboratory Approval Program certification manual. This report shall not be reproduced without written consent from HES, Inc. In the event of an error, HES's sole responsibility will be to perform reanalysis at its own expense. HES, Inc. assumes no other liability for damages incurred from the interpretation or use of the analysis provided.

(CHECK)

HUDSON ENVIRONMENTAL SERVICES, INC.

Mail: 22 Hudson Falls Road, South Glens Falls, NY 12803
Delivery: 211 Ferry Blvd., South Glens Falls, NY 12803
Phone: 518/747-1060 Fax: 518/747-1062

CHAIN OF CUSTODY RECORD / Lab Work Request

Client: NYS Dept. of Transportation-Region 3
Mail Address: NYS Dept. of Transportation
333 E. Washington Street
Syracuse, NY 13202
Client Contact/Person #: Christopher Anderson
Phone #: (315) 428-4628
Project Location: B.I.J.L.
Purchase Order:
Report To: William Kessler

HES Use Only Lab ID	Sample ID / Description	Date Collected	TIME A=a.m. P=p.m.	SAMPLE TYPE C=Composite G=Grab MATRIX	C	G	# Conts.	ANALYSIS REQUIRED
030528-G01	1031501-01 6-8 @ Beg. Abut	5/5/03	A P	SO		X	1	Asbestos Bulk - NOB
030528-G02	1031501-02 6-1 Span 2 @ pier 1	5/5	A P	SO		X	1	" " "
030528-G03	1031501-03 6-8 @ Exo Abut.	5/5	A P	SO		X	1	" " "

Matrix: S - Soil; SE - Sediment; SO - Solid; SL - Sludge; O - Oil; DW - Drinking Water; GW - Groundwater; SW - Surface Water; L - Leachate; A - Air; WI - Wipe; DS - Drum Solids; DL - Drum Liquids; X - Other; WW - Waste Water

Special Instructions: Bridge coating - If PLM negative, TEM confirmation on all.

Sampled by: (Signature) William A. Kessler	Date/Time 5/2/03	Received by: (Signature)	Date/Time 5-30-03 11:45AM
Relinquished by: (Signature)	Date/Time	Received by: (Signature)	Date/Time
Relinquished by: (Signature)	Date/Time	Received by: (Signature)	Date/Time
Dispatched by: (Signature)	Method of Shipment:		Date/Time
Relinquished by: (Signature)	Date/Time 5/28/03 10:35A	Turnaround Time: Normal	Lab Approval:

WHITE - Lab Copy YELLOW - Sampler Copy PINK - Generator Copy

HES Use Only

Samples Were: 1. Shipped or Hand Delivered NOTES:

2. Ambient or Chilled NOTES:

3. Received Broken/Leaking (Improperly Sealed) Y N NOTES:

4. Properly Preserved NOTES: Y N

5. Received Within Holding Times Y N NOTES:

COC Tape Was: 1. Present on Outer Package Y N

2. Unbroken on Outer Package Y N

3. Present on Sample Y N

4. Unbroken on Sample NOTES: Y N

COC Record Was: 1. Present Upon Receipt of Samples Y N

Discrepancies Between Sample Labels and COC Record? Y N NOTES:

Jun-04-03 11:00A Ved P. Kukreja, Ph.D. P.02

Asbestos Sampling Survey

Location:

BIN 1-03150-1 Interstate Route 81 South Bound over Route 173

BIN 1-03150-2 Interstate Route 81 North Bound over Route 173

Prepared for:

New York State
Department of Transportation

PIN 3501.19.111

LaBella Project No. 97132

December, 1997

Table of Contents

Page

I. Project Summary 1

II. Site Description 1

III. Inspection Procedures 1

IV. Results 2

Certification 2

Figures and Table

I. Project Summary

In accordance with conditions of Term Agreement D010010, LaBella Associates, P.C. conducted an asbestos sampling survey of the following bridges:

BIN 1-03150-1 Interstate Route 81 South Bound over Route 173
BIN 1-03150-2 Interstate Route 81 North Bound over Route 173

Based on laboratory analyses of bulk samples collected, no asbestos-containing materials were identified.

II. Site Description

The Site is located in Onondaga County, New York. For the purpose of this report, the Site consists of the two bridges listed above (See attached FIGURE 1 - Site Location Map).

III. Inspection Procedures

The following procedures were used to obtain the data for this Report:

A. A review of record drawings supplied by Region 3 personnel and a visual inspection of the subject structures were conducted to identify potential visible/accessible sources of asbestos-containing materials. Observations and notes were made to provide a description of the structures, and an estimate of the approximate amount, length, or area of ACM present.

B. Physical or operational constraints which might affect the removal of the ACM were identified and reported.

C. Bulk samples of suspected ACM were collected during the site inspection of the subject structures. Samples were taken from each homogeneous area that may contain ACM.

D. Samples were submitted for analysis. Preliminary PLM analyses of NOB materials were performed by LaBella Laboratories, a NYSDOH approved laboratory, to determine the presence and percentage of asbestos in each sample. TEM analyses of NOB materials, if necessary, were performed by EMSL Analytical, Inc. or New York Testing Laboratories, Inc.

E. Lab results were used to determine the approximate location, type, and amount of the verified ACM.

F. A drawing of the structures at the Site was created, in order to show sample locations and the approximate locations and amounts of confirmed ACM observed in accessible locations.

Only accessible areas were inspected. Inaccessible areas, such as areas within the bridges or the approaches to the bridges were not included in this inspection. No investigation was conducted by LaBella Associates to determine the presence of underground utilities on or in the immediate vicinity of the Site. Actual sample locations are shown in the attached FIGURE 2. Results of bulk sample analyses are tabulated in the attached TABLE.

IV. Results

BIN 1-03150-1 Interstate Route 81 South Bound over Route 173
BIN 1-03150-2 Interstate Route 81 North Bound over Route 173

Based on laboratory analyses of bulk samples collected, no asbestos-containing materials were identified.

Certification

LaBella Associates, P.C. certifies the accuracy of this report, to the best of our knowledge, based on the information collected as described in the Inspection Procedures Section of this investigation.

Figures & Table

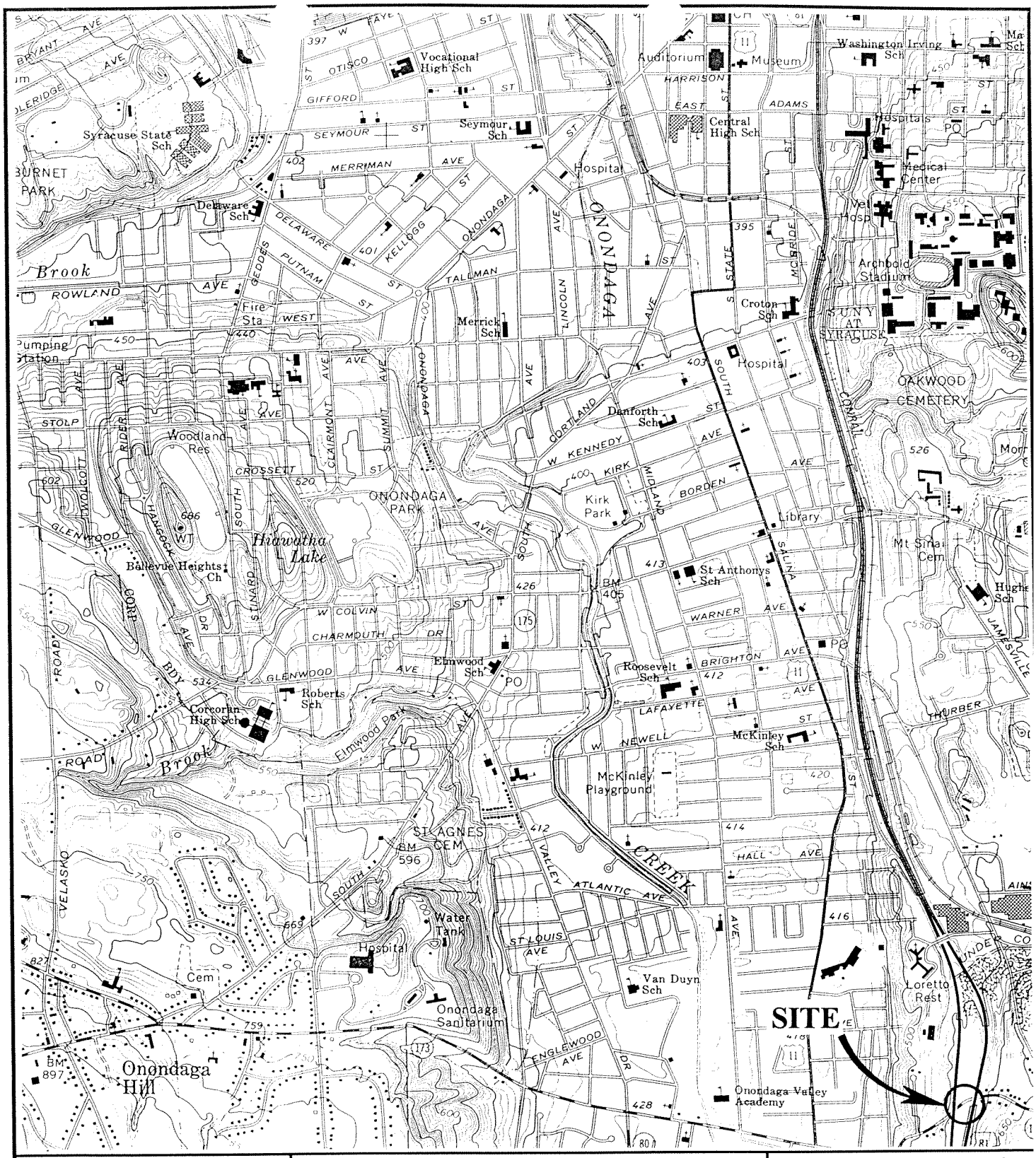

FIGURE 1
Site Location Map

I-81 SOUTH BOUND &
I-81 NORTH BOUND
OVER ROUTE 173

BINs 1-03150-1 & 2

SCALE: 1" = 2000'

LABELLA

PROJECT NO. 97132

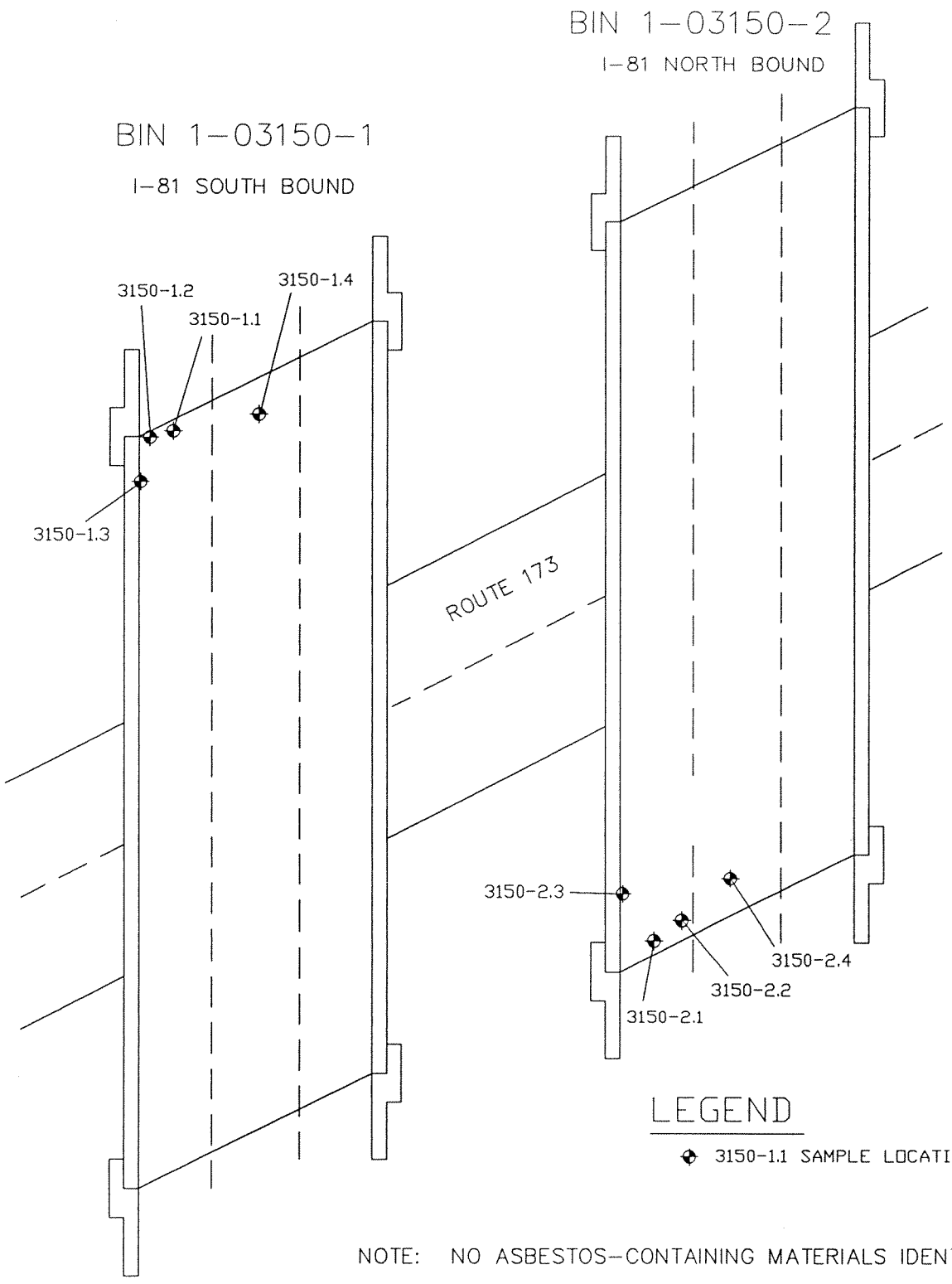

NOTE: NO ASBESTOS-CONTAINING MATERIALS IDENTIFIED

NORTH

PROJECT TITLE: ASBESTOS SAMPLING SURVEY 16 BRIDGES, ONONDAGA CO., NEW YORK	PROJECT NO. 97132 PIN 3501.19.111
FIGURE 2 : I-81 OVER ROUTE 173 BINs 1-03150-1 & 1-03150-2 SAMPLE LOCATIONS AND CONFIRMED ACM	NOT TO SCALE DATE: DECEMBER, 1997

Bulk Sample Results Table

Asbestos Sampling Survey
BIN 1-03150-1 Interstate Route 81 South Bound over Route 173
BIN 1-03150-2 Interstate Route 81 North Bound over Route 173
Onondaga County, New York
LaBella Project # 97132
PIN 3501.19.111

BIN 1-03150-1 Interstate Route 81 South Bound over Route 173

Sample #	Sample Location	Type of Material	Results % Asbestos	Amount of Material	Specification Item No.
3150-1.1	North End of Bridge Under Bearing	Bearing Pad	None Detected	N/A	N/A
3150-1.2	North End of Bridge on Pedestal	Masonry Coating	None Detected	N/A	N/A
3150-1.3	North End of Bridge on I Beam	Green Paint	None Detected	N/A	N/A
3150-1.4	North End of Bridge on I Beam	Green Paint	None Detected	N/A	N/A

BIN 1-03150-2 Interstate Route 81 North Bound over Route 173

Sample #	Sample Location	Type of Material	Results % Asbestos	Amount of Material	Specification Item No.
3150-2.1	South End of Bridge Under Bearing	Bearing Pad	None Detected	N/A	N/A
3150-2.2	South End of Bridge on Pedestal	Masonry Coating	None Detected	N/A	N/A
3150-2.3	South End of Bridge on I Beam	Green Paint	None Detected	N/A	N/A
3150-2.4	South End of Bridge on I Beam	Green Paint	None Detected	N/A	N/A

NEW YORK STATE
DEPARTMENT OF TRANSPORTATION
D031085 P.I.N 3501.60

LEVEL 1 LOAD RATING
B.I.N. 1031501
I-81 over NYS Route 173

LOAD RATING SUMMARY TABLE (LOAD FACTOR)					
CONTROLLING MEMBER	**CONTROLLING PARAMETER**	**LIVE LOAD**	**LIVE LOAD TYPE**	**INVENTORY RATING**	**OPERATING RATING**
SPAN 3 INTERIOR GIRDER (G2)	DESIGN FLEXURE	HS20-44	Axle Load	HS 23.1 (41.6 TONS)	HS 38.6 (69.5 TONS)
SPAN 3 INTERIOR GIRDER (G2)	DESIGN FLEXURE	ALTERNATE MILITARY LOADING	Axle Load	1.497 (35.9 TONS)	2.500 (60.0 TONS)

DOES NOT INCLUDE FUTURE WEARING COURSE

ANALYSIS METHOD:LOAD FACTOR

RECOMMENDED POSTING AS-IS CONDITION: _____ Tons __X__ None

CALCULATED BY:



DATE: 06/10/14

QUALITY ASSURANCE BY:



DATE: 06/10/14

C&S COMPANIES®

499 Col. Eileen Collins Blvd.
Syracuse, NY 13212
phone 315-455-2000
fax 315-455-9667
www.cscos.com

ENGINEERS
DESIGN BUILD
TECHNICAL RESOURCES
OPERATIONS

C&S Companies

C&S Engineers, Inc.
Syracuse Hancock International Airport
Syracuse, NY 13212
phone 315-455-2000
fax 315-455-9667
www.cscos.com

TECHNICAL MEMORANDUM

TO: FILE (190.514.001)

FROM: JESSICA S. BAUER, P.E.
NYSPE 084915

DATE: MARCH 24, 2014

C&S PROJECT NO.: 190.514.001

RE: SEISMIC ASSESSMENT SUMMARY
NEW YORK STATE DEPARTMENT OF TRANSPORTATION
D031085; PIN 3501.60; I-81

BIN: 1031501 Seismic Assessment

This memorandum summarizes the seismic assessment conducted for BIN 1031501 as part of the Interstate 81 Project in Syracuse, NY. The purpose of the assessment is to determine if seismic retrofits are warranted at the superstructure to substructure connection, and if further seismic evaluation of the structure is required. This memorandum will give the assessment results, retrofits required and recommendations for further seismic evaluation of the structure.

ASSESSMENT PROCEDURE

The seismic assessment was performed in accordance with the FHWA Seismic Retrofitting Manual for Highway Structures: Part 1 - Bridges, January 2006. As per the referenced manual, seismic assessment was performed for both lower level and upper level earthquake ground motion. The lower level earthquake ground motion has a reasonable likelihood of occurrence within the life of the bridge (50% probability of exceedance within a 75 year bridge life). The upper level earthquake ground motion has a finite likelihood of occurrence within the life of the bridge (7% probability of exceedance within a 75 year bridge life).

Values for the spectral acceleration for the Syracuse area used in the assessment are as follows:

- Lower Level Earthquake Ground Motion for a Short Period (0.2 seconds): $S_S = 0.0251$
- Lower Level Earthquake Ground Motion for a Long Period (1.0 seconds): $S_1 = 0.0076$
- Upper Level Earthquake Ground Motion for a Short Period (0.2 seconds): $S_S = 0.139$
- Upper Level Earthquake Ground Motion for a Long Period (1.0 seconds): $S_1 = 0.047$

These values are considered constant and are the same for all seismic assessments of bridges in the Syracuse area.

The Site Class is based on the soil conditions at the bridge location. It was determined that this parameter has little effect on the results of the seismic assessment because the spectral

You created this PDF from an application that is not licensed to print to novaPDF printer (http://www.novapdf.com)

acceleration values for the Syracuse area are small. Based on this, a site class of D was used for all seismic assessments of bridges in the Syracuse area.

Bridge parameters used in the seismic assessment were retrieved from the record drawings and WinBolts data.

The seismic assessment takes into account the anticipated service life, importance, and the seismic exposure of the bridge to determine a seismic retrofit category (SRC). The SRC is then used to determine seismic evaluation methods and retrofit measures. There are four SRCs, A through D. Seismic retrofit category A is the lowest category; bridges in this category do not require retrofits or further seismic evaluation. Seismic retrofit category D is the highest category; bridges in this category requiring the most rigorous seismic evaluations and retrofits.

ASSESSMENT RESULTS

The SRC for the bridge is "**C**" for lower level earthquake ground motion and "**B**" for upper level earthquake ground motion.

RETROFITS REQUIRED

Bearing replacements are not required at the abutments or piers. Seat width improvements are required at the abutments. Additional retrofits may be required if further seismic evaluation is needed.

RECOMMENDATIONS FOR FURTHER SEISMIC EVALUATION

For the lower level earthquake ground motion, it is recommended that capacity/demand ratios for bridge components are calculated as per Section 5.4 of the referenced manual. For the upper level earthquake ground motion, it is recommended that the capacities of the bearings are checked as per Section 5.2 of the referenced manual.

Retrofit cost estimates will be provided after any further required seismic evaluations are completed.

You created this PDF from an application that is not licensed to print to novaPDF printer (http://www.novapdf.com)

ENGINEERS
DESIGN BUILD
TECHNICAL RESOURCES
OPERATIONS

C&S Companies

C&S Engineers, Inc.
Syracuse Hancock International Airport
Syracuse, NY 13212
phone 315-455-2000
fax 315-455-9667
www.cscos.com

TECHNICAL MEMORANDUM

TO: **FILE (190.514.001)**

FROM: **PAUL F BYRNE, P.E.**
NYSPE 055928

DATE: **JUNE 112, 2014**

C&S PROJECT NO.: 190.514.001

RE: **NEW YORK STATE DEPARTMENT OF TRANSPORTATION**
D031085; PIN 3501.60; I-81 Opportunities, BIN 1031501 Fatigue Evaluation

---

This memorandum documents a fatigue evaluation conducted for the existing Interstate 81 Viaduct Project. Existing structures with AASHTO Category D, E, and E' fatigue-prone details require 100% hands-on inspection unless proven to be exempt. The purpose of the evaluation is to assess the remaining life of fatigue-prone components.

EVALUATION PROCEDURES

The fatigue evaluation was performed in accordance with the AASHTO Guide Specification for Fatigue Evaluations of Existing Steel Bridges, 1990. Fatigue-prone welds identified in the biennial inspection reports were located on record drawings and confirmed visually in the field. Additional information concerning fatigue-prone welds located in BIN folders was also obtained and reviewed prior to inspection.

EVALUATION RESULTS

The results of the fatigue evaluation of the existing bridge are shown below. The remaining safe fatigue life of the Span 3 Expansion (Exp.) fatigue components have been **exhausted**.

Fatigue Detail Location	Remaining Safe Fatigue Life (Years)	Remaining Mean Fatigue Life (Years)
Spans 1 & 2, Interior Girders (Orig.), End of Bottom Flange Cover Plate	53.73	376.08
Spans 1 & 2, Exterior Girders (Exp.), End of Bottom Flange Cover Plate	Infinite	Infinite
Spans 1 & 2, Interior Girders (Exp.), End of Bottom Flange Cover Plate	Infinite	Infinite
Span 3, Interior Girders (Orig.), End of Bottom Flange Cover Plate	19.27	206.52
Span 3, Exterior Girders (Exp.), End of Bottom Flange Cover Plate	-3.28	95.56

Fatigue Detail Location	Remaining Safe Fatigue Life (Years)	Remaining Mean Fatigue Life (Years)
Span 3, Interior Girders (Exp.), End of Bottom Flange Cover Plate	-0.90	107.27
Span 4, Interior Girders (Orig.), End of Bottom Flange Cover Plate	28.51	251.99
Span 4, Exterior Girders (Exp.), End of Bottom Flange Cover Plate	62.73	420.37
Span 4, Interior Girders (Exp.), End of Bottom Flange Cover Plate	70.42	458.22

E. Recommendations

The purpose of this deck evaluation is to document and determine existing conditions of the deck. It will be used as a tool for developing the scope of work and cost estimates for the development and comparison of alternatives for the overall project.

The total damaged area is approximately 24% of the total deck area. Due to the age, condition and chloride-ion content of the bridge deck concrete, the bridge deck should be rehabilitated or replaced to meet current design standards and to mitigate excessive future maintenance costs.

Option 1 – Scarify and Bridge Deck Overlay
The maximum service life this option would provide is 25 years. The design life of this project is 30 years (ETC + 30). This option does not meet the project objective of obtaining 30+ years of service life.

Option 2 – Bridge Deck Rehabilitation with 100% Deep Removal
This option will involve partial depth reconstruction with top mat rebar exposure of the entire bridge deck to remove the chloride contaminated concrete (100% deep removal). The existing bridge deck thickness is 8 ½" with 2 ½" of concrete cover over the top mat of reinforcing. The proposed partial depth reconstruction will include the addition of 1" of concrete to provide the standard 9 ½" bridge deck thickness. The existing top mat of reinforcing bars will be removed and replaced to accommodate the standard 3" of concrete cover. The existing 2 rail bridge railing and curbs will be removed and replaced with single-slope concrete barrier on both sides of the bridge. The existing elastomeric bridge joints will be replaced with new armorless bridge joints. The approach slabs will receive the same treatment as the deck. The Level 1 Load Rating for the final condition was found to be acceptable. This option would provide a service life of 35 years to the bridge deck. The construction cost of this option is $ 1.31 million.

Option 3 – Bridge Deck Replacement with Cast-In-Place Concrete

This option would involve the complete demolition of the bridge deck, 2-rail bridge rail with curbs and armorless bridge joints. The bridge deck would be replaced with a new concrete deck, new single-slope concrete barrier, and new armorless bridge joints. The new bridge deck would be 9 ½" standard thickness as compared to the 8 ½" existing thickness. The Level 1 Load Rating for the final condition was found to be acceptable. This option would provide a service life of 40 years to the bridge deck. The construction cost of this option is $ 1.52 million.

Option 4 – Bridge Deck Replacement with Pre-cast Concrete Deck Panels

This option will have the highest construction cost of all the options; however, traffic control costs may be lower due to the reduced construction time. Comparison of accelerated construction versus conventional construction is beyond the scope of work for this project at this time.

IN-DEPTH INSPECTION REPORT

D031085 P.I.N. 3501.60

B.I.N. 1031510

TEAM LEADER Andrew J. Fuller, P.E. 59848
NYSPE LICENSE #

ASSISTANT TEAM LEADER Jeffrey M. Reina, P.E.
ASSISTANT TEAM LEADER Logan Bessel
ASSISTANT TEAM LEADER Jerome Getter

FEATURE CARRIED East Glen Avenue
FEATURE CROSSED I – 81

DATE FIELD WORK BEGAN August 12, 2013
DATE FIELD WORK COMPLETED February 27, 2014

TABLE OF CONTENTS

- TP 349 & 350
- IN-DEPTH CONDITION DOCUMENTATION
- IN-DEPTH PHOTO DOCUMENTATION
- ASBESTOS REPORT

TP 349 & TP 350

BRIDGE ELEMENT RATINGS

Inspection Date: 8/13/2013 RC: 33 BIN: 1031510

Bridge Ratings

Carried: EAST GLEN AVENUE Crossed: 81I 81I33032015 CheckValue: 1,827,985,947

Inspection Agency: 10 - NYSDOT Type of Inspection: 1 - BIENNIAL
GTMS: 302 -- Steel - Stringer/Multi-Beam or Girder
POSTINGS: See Gen Rec Page 1 for Postings at time of inspection.
Further Investigation Needed: No
State Highway Number: 000000 Milepoint: 0.01 AADT/Yr: 4200 / 2000
Orientation: 3 - East Political Unit: 2055 - City of SYRACUSE Year Built: 1965
Total Spans: 2 Ramp Bridge Attached To Span: NA BIN: NA
General Recommendation: 5 Computed Condition Rating: 4.625

Abutment Ratings:	**Beg Abut**	**End Abut**
Joint with Deck	5	5
Bearings, Bolts, Pads	6	5
Seats and Pedestals	5	5
Backwall	5	5
Stem (Breastwall)	5	5
Erosion or Scour	6	6
Footings	9	9
Piles	8	8
Recommendation	5	5

Wingwall Ratings:	**Beg Abut**	**End Abut**
Walls	5	5
Footings	9	9
Erosion or Scour	6	6
Piles	8	8

Channel Ratings:	**Channel**
Stream Alignment	8
Erosion and Scour	8
Waterway Opening	8
Bank Protection	8

Approach Ratings:	**Approaches**
Drainage	3
Embankment	5
Settlement	3
Erosion	5
Pavement	3
Guide Railing	3

Number of Flags Issued:

RED: 0 Yellow: 0 Safety: 2

Vulnerability Reviews Recommended: 1=Yes, 2=No, 3=NA, X=NotActive

Hydraulic: 3	Overload: X	Steel: 2
Collision: 2	Concrete: X	Seismic: X

Inspector's Signature: CheckValue: 1,827,985,947 Date: 8/13/2013

Dennis Conley,PE () (Inspector ID:3000063)

Signed copy of this inspection report is available in the appropriate NYSDOT Regional Office

Reviewed By: Date: 9/3/2013

James R. Manning,PE () (QC ID:3000023)

Signed copy of this inspection report is available in the appropriate NYSDOT Regional Office

Inspection Date: 8/13/2013 RC: 33 BIN: 1031510

Span Ratings

Carried: EAST GLEN AVENUE Crossed: 81I 81I33032015 CheckValue: 1,827,985,947

Deck Element Ratings:	001	002
Wearing Surface	3	4
Curbs	4	4
Sidewalks, Fascias	5	5
Railings, Parapets	5	5
Scuppers	8	8
Gratings	8	8
Median	8	8
Mono Deck Surface	3	4

Superstructure Ratings:	001	002
Structural Deck	5	5
Primary Members	5	5
Secondary Members	5	6
Paint	6	6
Joints	2	8
Recommendation	5	5

Pier Ratings:	001	002
Bearings, Bolts, Pads	6	8
Pedestals	5	8
Top of Cap or Beam	4	8
Stem Solid Pier	8	8
Cap Beam	5	8
Pier Columns	5	8
Footings	9	8
Erosion or Scour	6	8
Piles	8	8
Recommendation	5	8

Utility Ratings:	001	002
Lighting	8	8
Sign Structure	8	8
Utilities and Support	4	4

Field Notes:

Field Date	Arrival	Departure	Temp (C)	Temp (F)	Weather Conditions
8/6/2013	10:30:00 AM	12:00:00 PM		70	partly cloudy
8/13/2013	11:30:00 AM	4:00:00 PM		70	partly cloudy

IN-DEPTH CONDITION DOCUMENTATION

IN DEPTH INSPECTION REPORT

BIN 1031510

Visual Inspection

The bridge was constructed in 1965 under contract F.A.C. 64-7 and has had multiple rehabilitations to various substructure and superstructure components. Miscellaneous substructure repairs, deck joint replacements and bearing restorations were completed in 2004 under contract D259742. In 2012, overhead sign structures for I-81 Southbound were added to the structure, under contract D261956. A portion of the concrete parapet with safety railing was reconstructed under this contract.

Cracks, spalls, and other field observations are shown on the plans. Below is a brief summary of conditions for each feature.

Superstructure

Deck – See Bridge Deck Evaluation Report

Steel – See Structural Steel Inspection Summary

Bearings – Bearing elements typically contained rust and salt accumulation. The expansion bearings appeared to contain pack rust and were not functioning as intended.

Substructure

West Abutment – No delaminated concrete was found during the field investigation. The abutment exhibited map-cracking, salt accumulation, and ice accumulation. The conduits and utility pipes were severely deteriorated at the entrance to the backwall. The deck joint above the abutment was leaking allowing water, salt, and ice to accumulate on the bridge seat and pedestals.

Pier – The pier exhibited widespread map-cracking. Isolated areas of delaminated concrete existed on the pedestals, and columns.

East Abutment – The abutment exhibited widespread map-cracking with isolated areas of delaminated concrete. The deck joint above the abutment was

leaking allowing water, salt and ice to accumulate on the bridge seat and pedestals. The backwall contained an isolated spall above pedestal 5.

STRUCTURAL STEEL INSPECTION SUMMARY

BIN 1031510

Special Emphasis Inspection Required

Non-Redundant/Fracture Critical Members – No

Pin and Hangers – No

Fatigue-Prone Welds – Yes

Non-Categorized Fatigue-Prone Details – No

Other (Specified in Text) – No

Special Emphasis Details

The girders contained partial length, welded cover plates. 100% Hands-on inspection was performed, no cracks were found.

Overall Steel Condition

The steel showed no sign of major deterioration. No areas of concern were observed.

Paint

Generally, the paint appeared to be in good condition. There was minimal delaminated paint on cross frames and girders. Some rust accumulation near the bearing and below deck joints was observed.

Section Loss

Due to the age of the steel a blanket 5% section loss to the bottom flanges should be used in load rating.

BIN 1031510 Plan View, & Core locations. Span 1

1/2

LEGEND
- C-X CORE LOCATION
- (XX) PHOTO LOCATION
- DELAMINATION
- SPALLING
- CRACK
- MAP CRACKING
- MOISTURE

EXISTING OVERHEAD SIGN STRUCTURE TO BE REMOVED UNDER HIGHWAY ESTIMATE

NEW SIGNS ATTACHED TO STRUCTURE (SEE NOTE 3)

ING R.O.W. FENCE MAIN

GUIDERAIL IN

A

SIGN 2

SIGN 1

SB1 SB1 SB2

SB2 SB2 SB2

SB 6+160

NB 6+160

exist Core

exist Core

FASCIA LINE

CURB LIN

8'

5'

6.03±

9'

43'

6'

C-1

3'

2'

40' 13.6m±

Header damaged

11'

BIN 1031510
East Glen of I-81

EXISTING DECK JOINT

℄ BRGS BEGIN ABUTMENT

10'

12.5'

12'

T.758 m±

8.583 m±

℄ PIER

AZ 65°38'33"

T.G.L.

EAST GLEN AVENUE

RT

• Pavement Cracked along Joint

℄ SIGN PANEL

2'

15'

2'

10'

CURB LINE

℄ SIGN PANEL

3'

3'

10'

4'

3'

15'

2'

• NO eval for Sidewalk - Snow Covered

• Parapet Wall - OK

Span 1

C-1
43' - Begin JOINT
6' from Curb

SIDEWALK AND CONCRETE BARRIER

7.5 m±

EXISTING CONCRETE WALL TO REMAIN

STING R.O.W. FENCE REMAIN

SHOULDER VARIES

TRAVEL LANE

TRAVEL LANE

TRAVEL LANE

TRAVEL LANE

SHLDR VARIES

I-81 SB

I-81 SB

6+140

I-81 SB TO I-481

I-81 SB TO I-481

FASCIA LINE

TRAVEL LANE

SHLDR VARIES

NB 6+140

I-81 NB

BIN 1031510 Plan View & Core locations - Span 2
2/2

LEGEND
- CORE LOCATION (C-X)
- PHOTO LOCATION (XX)
- DELAMINATION
- SPALLING
- CRACK
- MAP CRACKING
- MOISTURE

CHED
GN. 1
SB2
SB2
NB 6+160
Header damaged
FASCIA LINE
BRUSH CURB & CONCRETE BARRIER
EXISTING R.O.W. FENCE TO REMAIN
R 10m
7.5 m±
A
CORRUGATED BEAM GUIDE RAILING (SHOP CURVED) ITEM 606.16000D1
2'
B90
30'
2'
5'
15'
exst Core
CURB LINE
6.5'
3'
10'
3'
3'
exst Core
exst Core
3.35m TRAVEL LANE
4'
4'
5'
exst Core
℄ BRGS END ABUTMENT
EXISTING DECK JOINT
LT
℄ PIER
AZ 65°38'33"
9.5 m OUT TO OUT
4'
6'
3.35m TRAVEL LANE
50'
C-2
35'
16'
RT
Pavement Cracked
Header damage
T.G.L.
℄ SIGN PANEL
EAST GLEN AVENUE
NO eval. for Sidewalk - Snow Covered
Parapet wall - OK
SIDEWALK AND CONCRETE BARRIER
1.90m
Span 2
C-2
35' end Joint
16' face of Curb
EXISTING GUIDERAIL TO REMAIN
FASCIA LINE
TRAVEL LANE
SHLDR VARIES
TRAVEL LANE
TRAVEL LANE
TRAVEL LANE
TRAVEL LANE
SHOULDER
SHLDR VARIES
NB 9+140
I-81 NB
I-81 NB
I-481 TO I-81 NB
I-481 TO I-81 NB
I-81 SB TO I-481
EXISTING R.O.W. FENCE TO REMAIN

BIN 1031510
East Glen o/
I-81

FED ROAD REG. NO.	STATE	CONTRACT NO.	SHEET NO.	TOTAL SHEETS
1	N.Y.	D259742	534	788

INTERSTATE ROUTE 505, SYRACUSE CITY LINE TO SIZER STREET
BRIDGE REHABILITATION PROJECT (ELEMENT SPECIFIC)
VARIOUS BRIDGES ON INTERSTATES 81 & 690
CITY OF SYRACUSE
ONONDAGA COUNTY
P.I.N. 3804.66 | B.I.N. 1031510

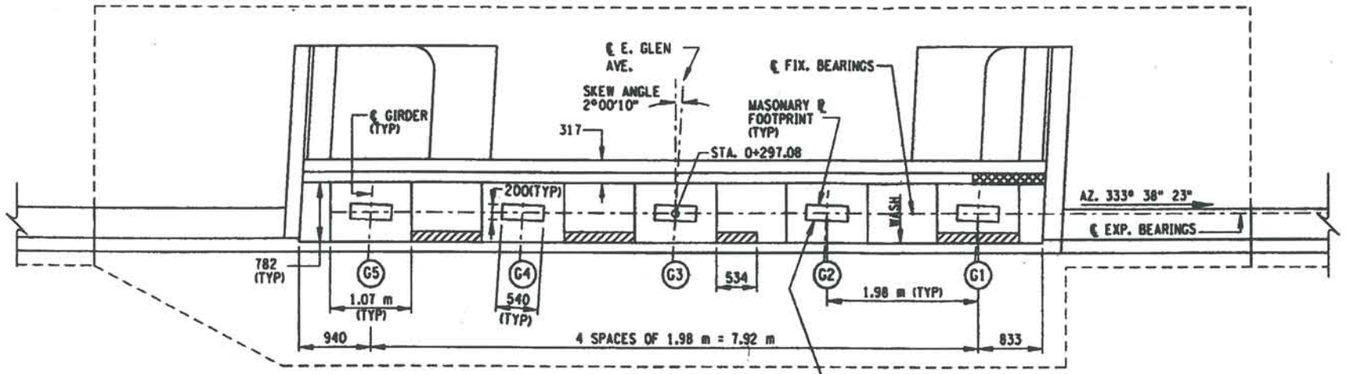

WEST ABUTMENT - PLAN

0.4 0 1 2 m

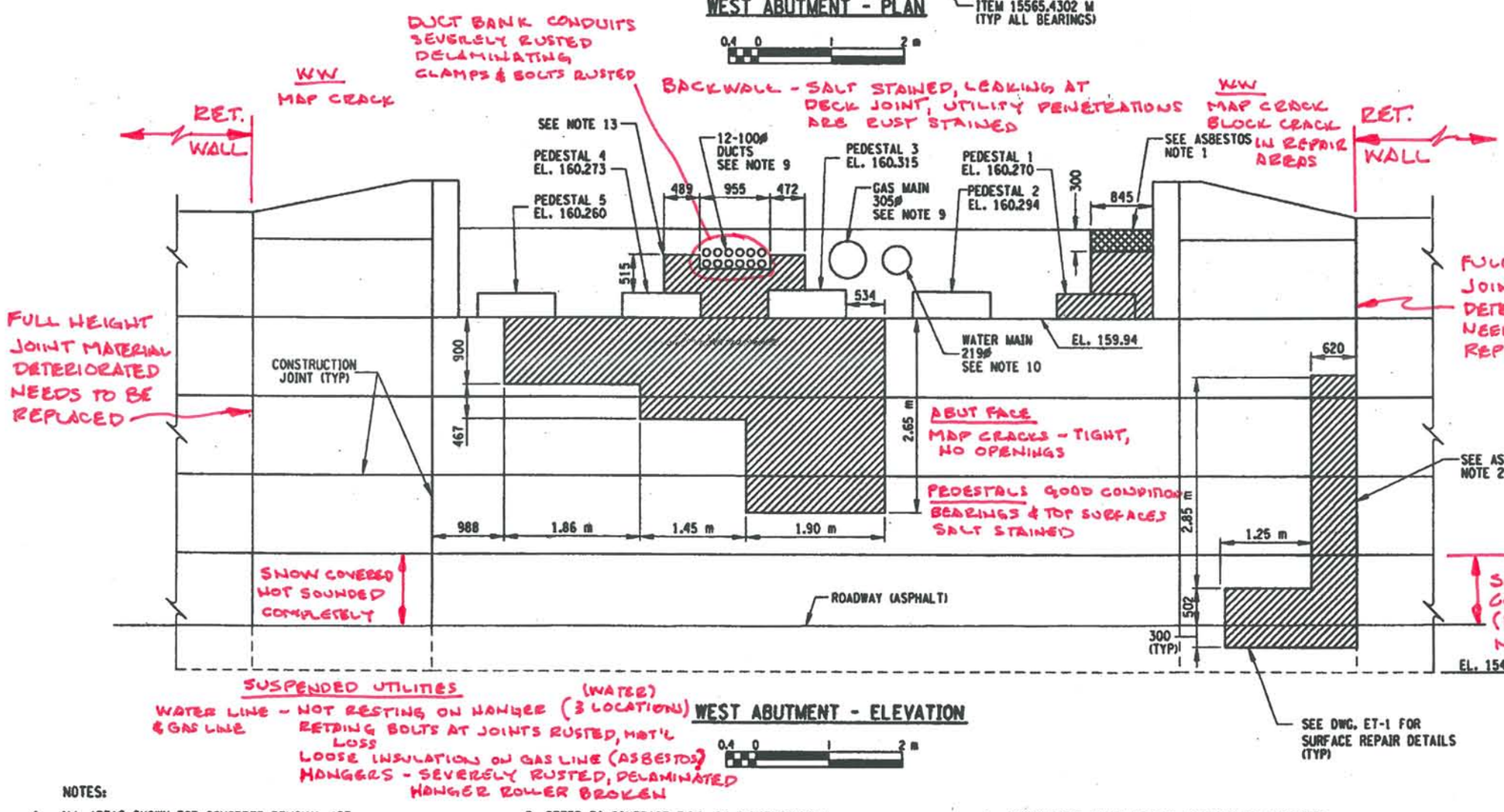

SUSPENDED UTILITIES (WATER) (3 LOCATIONS)
WATER LINE & GAS LINE - NOT RESTING ON HANGER
RETAINING BOLTS AT JOINTS RUSTED, MAT'L LOSS
LOOSE INSULATION ON GAS LINE (ASBESTOS?)
HANGERS - SEVERELY RUSTED, DELAMINATED
HANGER ROLLER BROKEN

WEST ABUTMENT - ELEVATION

0.4 0 1 2 m

LEGEND

- C-X — CORE LOCATION
- XX — PHOTO LOCATION
- DELAMINATION
- SPALLING
- CRACK
- MAP CRACKING
- MOISTURE

CONCRETE, (SM)

ITEM 210.5431 M - REMOVAL AND DISPOSAL OF ASBESTOS CONTAINING CAULKING (BV12) (M)

ITEM 210.9912 M - REMOVAL AND DISPOSAL OF MISC. ASBESTOS CONTAINING MATERIALS (BV12) (SM)

ITEM 582.05 M - REMOVAL OF STRUCTURAL CONCRETE REPLACEMENT WITH CLASS A CONCRETE (CM)

ITEM 582.07 M - REMOVAL OF STRUCTURAL CONCRETE REPLACEMENT WITH VERTICAL AND OVERHEAD PATCH MATERIAL (SM)

ITEM 15565.4302 M - BRIDGE BEARING RESTORATION (EA)

ITEM 585.02 M - STRUCTURAL LIFTING OPERATIONS - TYPE B -(EA) (LIFTING FROM ABUTMENT SEAT)

ITEM 10564.11 M - REMOVE, STORE AND RESET DIAPHRAGMS ON STRUCTURE (EA)

LEGEND:

AREA OF PROPOSED WORK; ITEM 582.05 M REMOVAL OF STRUCTURAL CONCRETE AT LEAST 40-mm BEHIND REINFORCEMENT REPLACE WITH CLASS A CONCRETE

AREA OF PROPOSED WORK; ITEM 582.07 M REMOVAL OF STRUCTURAL CONCRETE-AT LEAST 40 mm BEHIND REINFORCEMENT REPLACE WITH VERTICAL AND OVERHEAD PATCH MATERIAL.

NOTES:

1. ALL AREAS SHOWN FOR CONCRETE REMOVAL ARE APPROXIMATE AND SHALL BE FIELD VERIFIED BY THE CONTRACTOR AND EIC.
2. CONCRETE REMOVAL TO LIMITS SHOWN INCLUDES SOUND CONCRETE AROUND THE PERIMETER OF THE DETERIORATED CONCRETE, A.O.B.E.
3. WHEN REMOVING EXISTING CONCRETE, SAWCUT 5 mm MIN. TO PRODUCE NEAT REMOVAL LINES. ANY COST TO BE INCLUDED IN THE BID PRICE FOR ITEM 582.05 M OR 582.07 M.
4. ELEVATIONS ARE GIVEN FOR REFERENCE ONLY.
5. REFER TO CONTRACT F.I.C. 64-7 FOR ORIGINAL CONSTRUCTION DETAILS.
6. FOR CONCRETE REPAIR DETAILS SEE DWG. NO. BR-1.
7. RESTORE TO ORIGINAL DIMENSIONS.
8. PEDESTALS NUMBERED FROM NORTH TO SOUTH.
9. CONTRACTOR SHALL VERIFY LOCATION OF UTILITIES PRIOR TO COMMENCING CONCRETE REPAIR WORK IN THE BACKWALL.
10. STRUCTURAL LIFTING OPERATIONS FOR BEARING RESTORATION (ITEM 585.02 M - TYPE B LIFTING FROM ABUTMENT SEAT) SEE DWG. NO. TSL-1.
11. PERFORM LOW SLIDER EXPANSION BEARING RESTORATION TO BEARING NOS. 1-5 (ITEM 15565.4302 M) SEE DWG. NO. BR-5
12. SEE DWG. NO. BR-2 FOR DETAILS FOR PLACEMENT OF GALVANIC ANODES IN PEDESTAL REPAIR AREA.
13. THE CONTRACTOR SHALL REMOVE AND REINSTALL THE END DIAPHRAGM AS NEEDED FOR ACCESS TO THIS REPAIR AREA LOCATED ON THE BACKWALL. THE COST TO BE INCLUDED UNDER ITEM 10564.11 M.

B.I.N. 1031510

SPECIAL NOTE: ALL DIMENSIONS ARE SHOWN IN MILLIMETERS UNLESS OTHERWISE NOTED.

AS BUILT REVISIONS

SIGNATURE DATE

EAST GLEN AVENUE OVER INTERSTATE 81

WEST ABUTMENT

STATE OF NEW YORK
DEPARTMENT OF TRANSPORTATION

FILENAME	REGION	DATE	DRAWING NO.

C&S Engineers, Inc.

DESIGN SUPERVISOR PMW — JOB MANAGER TAS — DESIGNED BY LBO — CHECKED BY DJW — DRAFTED BY LBO — ESTIMATED BY JRF

FED ROAD REG. NO.	STATE	CONTRACT NO.	SHEET NO.	TOTAL SHEETS
1	N.Y.	D259742	535	788

INTERSTATE ROUTE 505, SYRACUSE CITY LINE TO SIZER STREET
BRIDGE REHABILITATION PROJECT (ELEMENT SPECIFIC)
VARIOUS BRIDGES ON INTERSTATES 81 & 690
CITY OF SYRACUSE
ONONDAGA COUNTY
P.I.N. 3804.66 B.I.N. 1031510

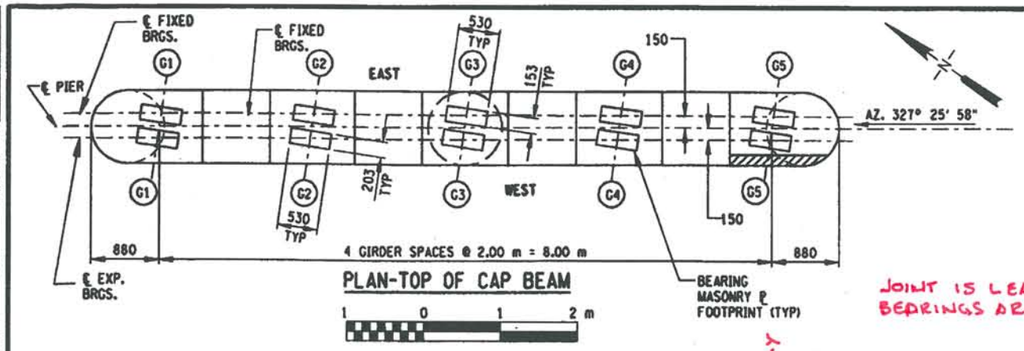

PLAN-TOP OF CAP BEAM

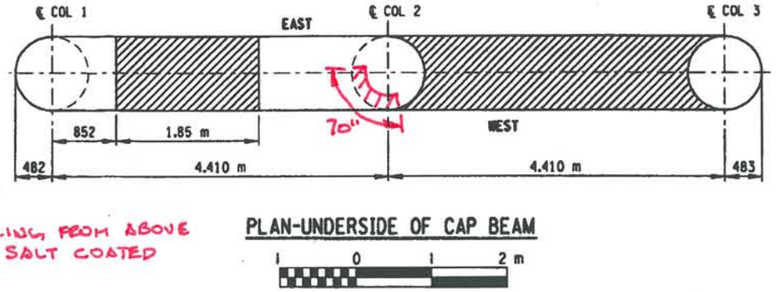

PLAN-UNDERSIDE OF CAP BEAM

JOINT IS LEAKING FROM ABOVE BEARINGS ARE SALT COATED

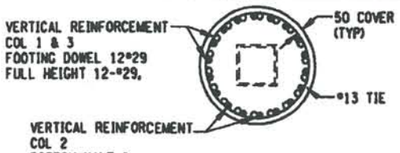

SECTION A-A
NTS

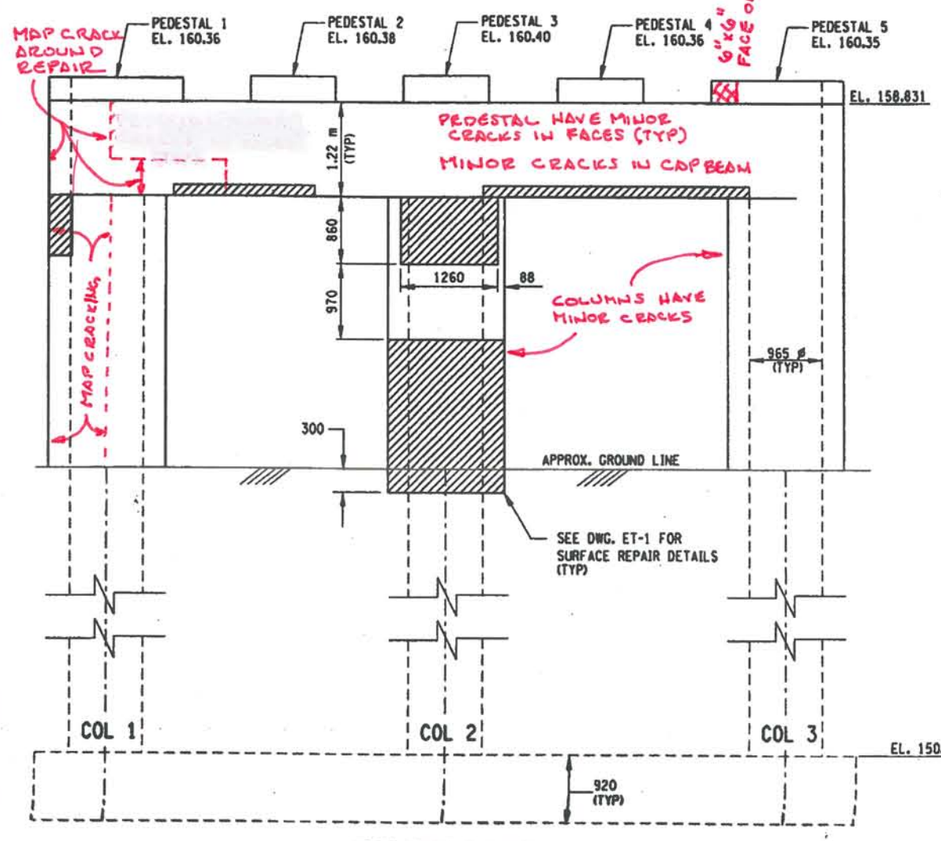

WEST FACE ELEVATION
1 0 1 2 m

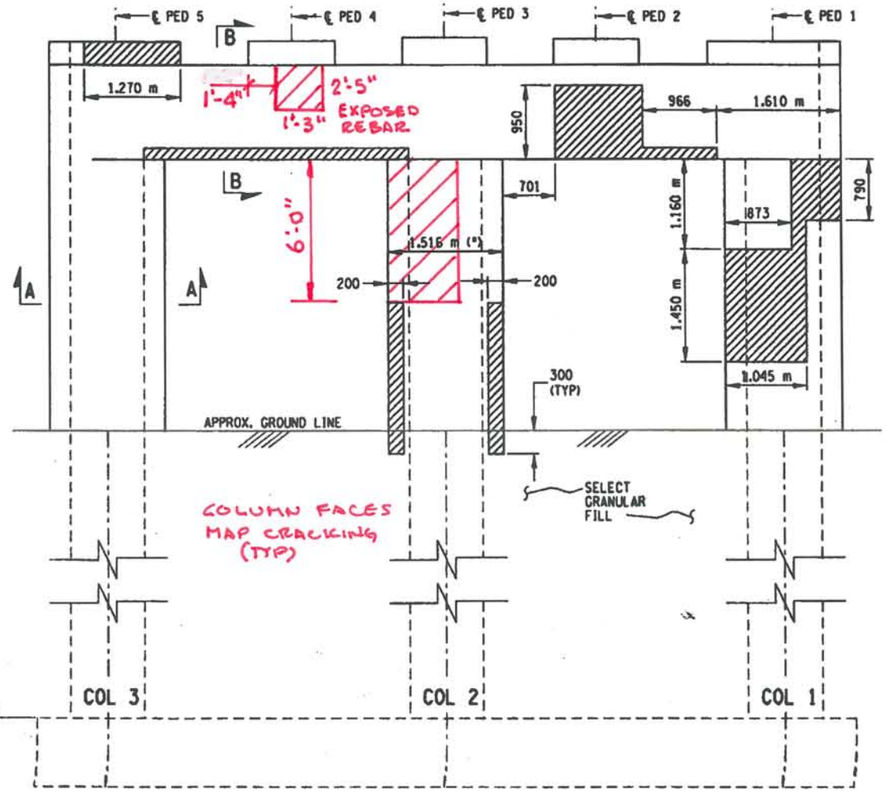

EAST FACE ELEVATION
1 0 1 2 m

LEGEND

- C-X — CORE LOCATION
- XX — PHOTO LOCATION
- DELAMINATION
- SPALLING
- CRACK
- MAP CRACKING
- MOISTURE

NOTES:

1. ALL AREAS SHOWN FOR CONCRETE REMOVAL ARE APPROXIMATE AND SHALL BE FIELD VERIFIED BY THE CONTRACTOR AND EIC.
2. CONCRETE REMOVAL TO LIMITS SHOWN INCLUDES SOUND CONCRETE AROUND THE PERIMETER OF THE DETERIORATED CONCRETE, A.O.B.E.
3. WHEN REMOVING EXISTING CONCRETE, SAWCUT 5 mm MIN. TO PRODUCE NEAT REMOVAL LINES. ANY COST TO BE INCLUDED IN THE BID PRICE FOR ITEM 582.05 M.
4. ELEVATIONS ARE GIVEN FOR REFERENCE ONLY.
5. REFER TO CONTRACT FIC 64-7 FOR ORIGINAL CONSTRUCTION DETAILS.
6. FOR REMOVAL DETAILS SEE DWG. BR-1.
7. RESTORE TO ORIGINAL DIMENSIONS.
8. PEDESTALS NUMBERED FROM NORTH TO SOUTH.
9. STRUCTURAL LIFTING OPERATIONS FOR BEARING RESTORATION AND CONCRETE REPAIRS (ITEM 585.03M-TYPE C LIFTING FROM FOOTING). SEE DWG NO. TSL-1.
10. PERFORM EXPANSION BEARING RESTORATION TO BEARING NOS. 1 - 5 (EXP.), (ITEM 15565.4302 M). SEE DWG NO. BR-5, FIXED BEARING RESTORATION TO BEARINGS NO. 1 - 5.
11. NO DECORATIVE FINISHES WILL BE INSTALLED UNDER THIS CONTRACT.
12. SEE DWG. NO. BR-2 FOR DETAILS OF PLACEMENT OF GALVANIC ANODES IN PEDESTAL REPAIR AREAS.
13. CRACKS IN PIER COLUMNS AND CAPBEAM WILL BE REPAIRED WITH INJECTION GROUTING AOBE.

LIST OF ITEMS USED:

ITEM 11555.8198 M - CRACK REPAIR (3 mm OR WIDER) BY INJECTION OF PORTLAND CEMENT GROUT (m).
ITEM 18559.1696 M - PROTECTIVE SEALING OF STRUCTURAL CONCRETE, (SM)
ITEM 15565.4302 M - BRIDGE BEARING RESTORATION (EA)
ITEM 582.05 M - REMOVAL OF STRUCTURAL CONCRETE - REPLACEMENT WITH CLASS A CONCRETE (CM)
ITEM 585.03 M - STRUCTURAL LIFTING OPERATIONS - TYPE C - (EA) (LIFTING FROM FOOTING)

LEGEND:

AREA OF PROPOSED WORK; ITEM 582.05 M REMOVAL OF STRUCTURAL CONCRETE-AT LEAST 40 mm BEHIND REINFORCEMENT REPLACE WITH CLASS A CONCRETE.

TABLE - ITEM 11555.8198 M	
PIER	3.2 m

(*) NOTE:
THE WIDTH OF THE PIER COLUMN SHOWN IN ELEVATION REPRESENTS THE FLATTENED AREA OF ½ THE CIRCUMFERENCE OF THE COLUMN

SPECIAL NOTE: ALL DIMENSIONS ARE SHOWN IN MILLIMETERS UNLESS OTHERWISE NOTED.

C&S Engineers, Inc.

B.I.N. 1031510

SPECIAL NOTE: ALL DIMENSIONS ARE SHOWN IN MILLIMETERS UNLESS OTHERWISE NOTED.

AS BUILT REVISIONS

SIGNATURE DATE

EAST GLEN AVENUE OVER INTERSTATE 81

PIER 1

STATE OF NEW YORK
DEPARTMENT OF TRANSPORTATION

FILENAME	REGION	DATE	DRAWING NO.
3804668B_P1A	3	OCT 2004	ST2-3

DESIGN SUPERVISOR PRW JOB MANAGER TAS DESIGNED BY LBO CHECKED BY DJW DRAFTED BY LBO ESTIMATED BY JRF CHECKED BY

FILE NAME = M:\MAP\...
PLOT TIME = 11/2/2005
USER = davidw

ESTIMATED BY	DRAFTED BY	CHECKED BY	DESIGNED BY	JOB MANAGER	DESIGN SUPERVISOR
LBO	LBO	DJW	TAS	PWW	JRF

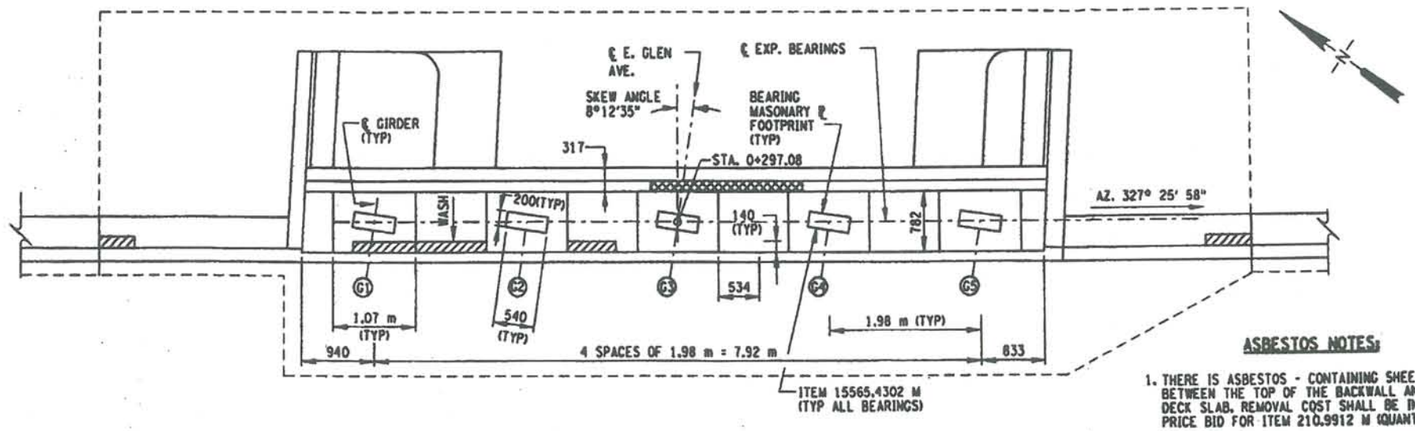

TABLE - ITEM 582.07 M	
ELEMENT	QUANTITY (SM)
BACKWALL	0.60

TABLE - ITEM 11555.8198 M	
ELEMENT	QUANTITY (M)
BACKWALL	1.5

FED ROAD REG. NO.	STATE	CONTRACT NO.	SHEET NO.	TOTAL SHEETS
1	N.Y.	D259742	536	788

INTERSTATE ROUTE 505, SYRACUSE CITY LINE TO SIZER STREET
BRIDGE REHABILITATION PROJECT (ELEMENT SPECIFIC)
VARIOUS BRIDGES ON INTERSTATES 81 & 690
CITY OF SYRACUSE
ONONDAGA COUNTY
P.I.N. 3804.66 B.I.N. 1031510

ASBESTOS NOTES:

1. THERE IS ASBESTOS - CONTAINING SHEET PACKING LOCATED BETWEEN THE TOP OF THE BACKWALL AND THE BOTTOM OF DECK SLAB. REMOVAL COST SHALL BE INCLUDED IN THE UNIT PRICE BID FOR ITEM 210.9912 M (QUANTITY = 0.28 SM)
2. THERE IS ASBESTOS CONTAINING CAULK COMPOUND BETWEEN THE WINGWALL AND RETAINING WALL. REMOVAL COST SHALL BE INCLUDED IN THE UNIT PRICE BID FOR ITEM 210.5431 M (QUANTITY = 3.00 SM)

EAST ABUTMENT - PLAN



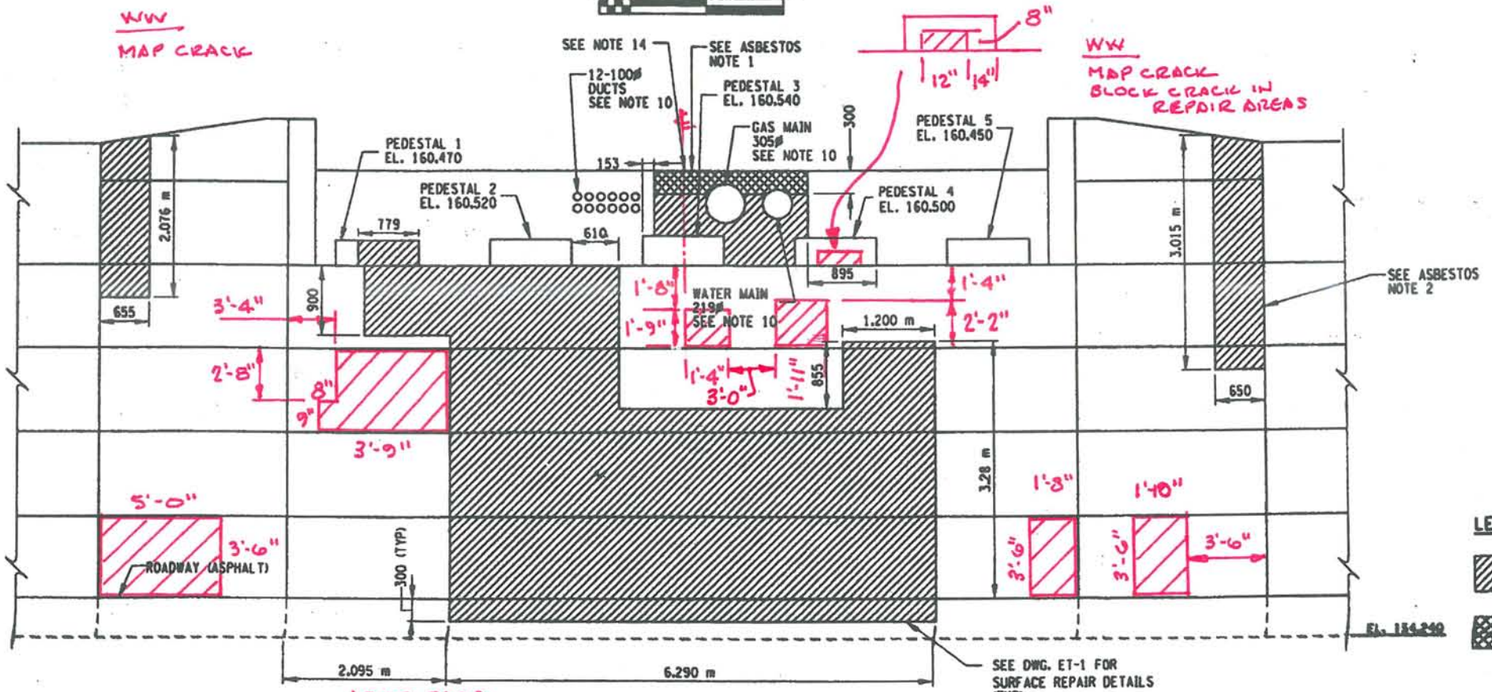

ABUT FACE
MAP CRACKING
BLOCK CRACKING IN REPAIR AREAS

EAST ABUTMENT - ELEVATION



NOTES:

1. ALL AREAS SHOWN FOR CONCRETE REMOVAL ARE APPROXIMATE AND SHALL BE FIELD VERIFIED BY THE CONTRACTOR AND E.I.C.
2. CONCRETE REMOVAL TO LIMITS SHOWN INCLUDES SOUND CONCRETE AROUND THE PERIMETER OF THE DETERIORATED CONCRETE, A.O.B.E.
3. WHEN REMOVING EXISTING CONCRETE, SAWCUT 5 mm MIN. TO PRODUCE NEAT REMOVAL LINES. ANY COST TO BE INCLUDED IN THE BID PRICE FOR ITEM 582.05 M OR 582.07 M.
4. ELEVATIONS ARE GIVEN FOR REFERENCE ONLY.
5. REFER TO CONTRACT F.I.C. 64-7 FOR ORIGINAL CONSTRUCTION DETAILS.
6. FOR CONCRETE REPAIR DETAILS SEE DWG. NO. BR-1.
7. RESTORE TO ORIGINAL DIMENSIONS.
8. PEDESTALS NUMBERED FROM NORTH TO SOUTH.
9. CRACKS IN BACKWALL WILL BE REPAIRED AS ORDERED BY EIC BY INJECTION GROUTING METHOD UNDER ITEM 11555.8198 M.
10. CONTRACTOR SHALL VERIFY LOCATION OF UTILITIES PRIOR TO COMMENCING CONCRETE REPAIR WORK IN THE BACKWALL.
11. STRUCTURAL LIFTING OPERATIONS FOR BEARING RESTORATION (ITEM 585.02 M - TYPE B LIFTING FROM ABUTMENT SEAT) SEE DWG. NO. TSL-1.
12. PERFORM LOW SLIDER EXPANSION BEARING RESTORATION TO BEARING NOS. 1-5 (ITEM 15565.4302 M) SEE DWG. NO. BR-5.
13. SEE DWG. NO. BR-2 FOR DETAILS FOR PLACEMENT OF GALVANIC ANODES IN PEDESTAL REPAIR AREA.
14. THE CONTRACTOR SHALL REMOVE AND REINSTALL THE END DIAPHRAGM AS NEEDED FOR ACCESS TO THIS REPAIR AREA LOCATED ON THE BACKWALL. THE COST TO BE INCLUDED UNDER ITEM 10564.11 M

LEGEND

- C-X — CORE LOCATION
- (XX) — PHOTO LOCATION
- DELAMINATION
- SPALLING
- CRACK
- MAP CRACKING
- MOISTURE

LEGEND:

- AREA OF PROPOSED WORK; ITEM 582.05 M REMOVAL OF STRUCTURAL CONCRETE AT LEAST 40-mm BEHIND REINFORCEMENT REPLACE WITH CLASS A CONCRETE
- AREA OF PROPOSED WORK; ITEM 582.07 M REMOVAL OF STRUCTURAL CONCRETE AT LEAST 40 mm BEHIND REINFORCEMENT REPLACE WITH VERTICAL AND OVERHEAD PATCH MATERIAL

SPECIAL NOTE: ALL DIMENSIONS ARE SHOWN IN MILLIMETERS UNLESS OTHERWISE NOTED.

B.I.N. 1031510

AS BUILT REVISIONS

SIGNATURE DATE

EAST GLEN AVENUE
OVER
INTERSTATE 81

EAST ABUTMENT

STATE OF NEW YORK
DEPARTMENT OF TRANSPORTATION

FILENAME	REGION	DATE	DRAWING NO.
3804668B A2A	3	OCT 2004	ST2-6

C&S Engineers, Inc.

IN-DEPTH PHOTO DOCUMENTATION

C&S Engineers, Inc.
499 Col. Eileen Collins Blvd.
Syracuse, New York 13212
Phone: (315) 455-2000
Fax: (315) 455-9667
www.cscos.com

East Glen Ave. over I-81 NB and SB – BIN 1031510



DESCRIPTION: WEST ABUTMENT – ELEVATION – LOOKING SOUTHWEST – CONTAINS CRACKS MAP-CRACKING AND SALT-STAINS

PHOTO 1



DESCRIPTION: WEST ABUTMENT – PEDESTAL 1 – TYPICAL

PHOTO 2

C&S Engineers, Inc.
499 Col. Eileen Collins Blvd.
Syracuse, New York 13212
Phone: (315) 455-2000
Fax: (315) 455-9667
www.cscos.com

East Glen Ave. over I-81 NB and SB – BIN 1031510



DESCRIPTION: WEST ABUTMENT – BEARING 5 – RUST AND SALT ACCUMULATION

PHOTO 3



DESCRIPTION: WEST ABUTMENT – BACKWALL – BEHIND PEDESTAL 4 – ICE AND SALT ACCUMULATION FROM LEAKING DECK JOINT

PHOTO 4

C&S Engineers, Inc.
499 Col. Eileen Collins Blvd.
Syracuse, New York 13212
Phone: (315) 455-2000
Fax: (315) 455-9667
www.cscos.com

East Glen Ave. over I-81 NB and SB – BIN 1031510



DESCRIPTION: WEST ABUTMENT – BACKWALL & CHEEKWALL – SALT STAINING AND ICE ACCUMULATION

PHOTO 5



DESCRIPTION: PIER – WEST FACE – LOOKING EAST – SALT STAINING, MAP-CRACKING – ISOLATED PEDESTAL SPALL

PHOTO 6

C&S Engineers, Inc.
499 Col. Eileen Collins Blvd.
Syracuse, New York 13212
Phone: (315) 455-2000
Fax: (315) 455-9667
www.cscos.com

East Glen Ave. over I-81 NB and SB – BIN 1031510



DESCRIPTION: PIER – PEDESTAL 1 – CRACKS BUT SOLID

PHOTO 7



DESCRIPTION: PIER – BEARING 1 – SALT ACCUMULATION & PACK-RUST – TYPICAL ALL BEARINGS

PHOTO 8

C&S Engineers, Inc.
499 Col. Eileen Collins Blvd.
Syracuse, New York 13212
Phone: (315) 455-2000
Fax: (315) 455-9667
www.cscos.com

East Glen Ave. over I-81 NB and SB – BIN 1031510



DESCRIPTION: PIER – PEDESTAL 5 – WEST FACE – ISOLATED CONCRETE SPALL WITH RUST STAINING

PHOTO 9



DESCRIPTION: PIER – EAST FACE – LOOKING WEST – MAP-CRACKING AND ISOLATED DELAMINATED CONCRETE AREAS

PHOTO 10

C&S Engineers, Inc.
499 Col. Eileen Collins Blvd.
Syracuse, New York 13212
Phone: (315) 455-2000
Fax: (315) 455-9667
www.cscos.com

East Glen Ave. over I-81 NB and SB – BIN 1031510



DESCRIPTION: PIER – EAST FACE – CENTER COLUMN – DELAMINATED CONCRETE – TYPICAL CENTER AND NORTH COLUMN

PHOTO 11



DESCRIPTION: PIER – EAST FACE – NORTH COLUMN – MAP-CRACKED AND DELAMINATED CONCRETE

PHOTO 12

C&S Engineers, Inc.
499 Col. Eileen Collins Blvd.
Syracuse, New York 13212
Phone: (315) 455-2000
Fax: (315) 455-9667
www.cscos.com

East Glen Ave. over I-81 NB and SB – BIN 1031510



DESCRIPTION: EAST ABUTMENT – LOOKING SOUTHEAST – MAP-CRACKED, SALT STAINED, ISOLATED DELAMINATED CONCRETE AREAS

PHOTO 13



DESCRIPTION: EAST ABUTMENT – PEDESTAL 4 – DELAMINATED CONCRETE

PHOTO 14

C&S Engineers, Inc.
499 Col. Eileen Collins Blvd.
Syracuse, New York 13212
Phone: (315) 455-2000
Fax: (315) 455-9667
www.cscos.com

East Glen Ave. over I-81 NB and SB – BIN 1031510



DESCRIPTION: EAST ABUTMENT – PEDESTALS 3 & 4 – DELAMINATED CONCRETE AREAS

PHOTO 15



DESCRIPTION: EAST ABUTMENT – BACKWALL – SPALLED CONCRETE ABOVE PEDESTAL 5

PHOTO 16

C&S Engineers, Inc.
499 Col. Eileen Collins Blvd.
Syracuse, New York 13212
Phone: (315) 455-2000
Fax: (315) 455-9667
www.cscos.com

East Glen Ave. over I-81 NB and SB – BIN 1031510



DESCRIPTION: SUPERSTRUCTURE – SPAN 1 – STEEL AND UTILITIES – CONDUITS AND SUPPORTS ARE HEAVILY RUSTED (BOTH SPANS)

PHOTO 17

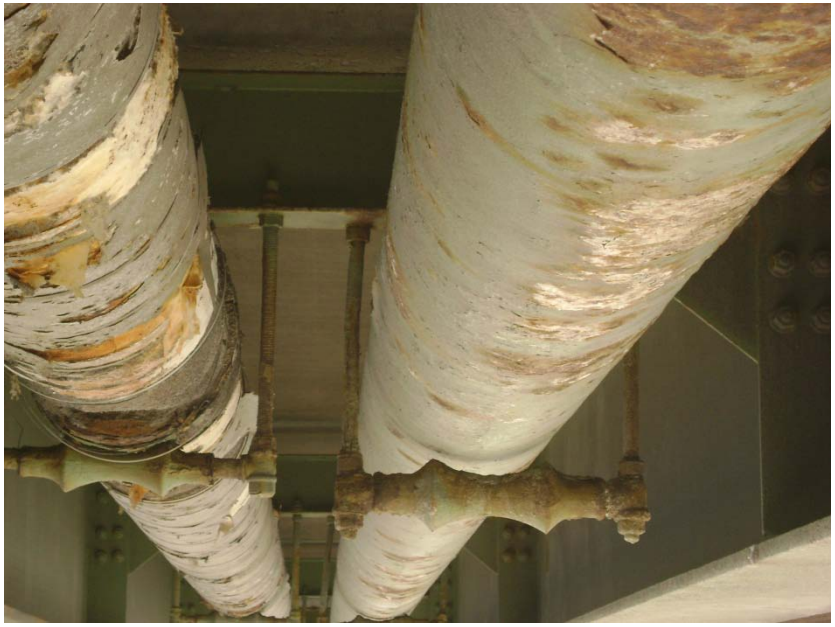

DESCRIPTION: SUPERSTRUCTURE – SPAN 1 – UNSUPPORTED UTILITY

PHOTO 18

C&S Engineers, Inc.
499 Col. Eileen Collins Blvd.
Syracuse, New York 13212
Phone: (315) 455-2000
Fax: (315) 455-9667
www.cscos.com

East Glen Ave. over I-81 NB and SB – BIN 1031510



DESCRIPTION: SUPERSTRUCTURE – SPAN 1 – CONDUITS HEAVILY RUSTED

PHOTO 19



DESCRIPTION: SUPERSTRUCTURE – SPAN 1 – CONDUITS HEAVILY RUSTED – FLANGED CONNECTIONS APPEAR BRITTLE AND UNSUPPORTED

PHOTO 20

C&S Engineers, Inc.
499 Col. Eileen Collins Blvd.
Syracuse, New York 13212
Phone: (315) 455-2000
Fax: (315) 455-9667
www.cscos.com

East Glen Ave. over I-81 NB and SB – BIN 1031510



DESCRIPTION: SUPERSTRUCTURE – SPAN 1 – DECK OVERHANG – TRANSVERSE CRACKS

PHOTO 21



DESCRIPTION: SUPERSTRUCTURE – SPAN1 – FASCIA - INTACT

PHOTO 22

C&S Engineers, Inc.
499 Col. Eileen Collins Blvd.
Syracuse, New York 13212
Phone: (315) 455-2000
Fax: (315) 455-9667
www.cscos.com

East Glen Ave. over I-81 NB and SB – BIN 1031510



DESCRIPTION: SUPERSTRUCTURE - SPAN 2 – BAY 4 - FACING EAST - UNDERSIDE OF DECK - TYPICAL

PHOTO 23



DESCRIPTION: BRIDGE ELEVATION – SPAN 2

PHOTO 24

C&S Engineers, Inc.
499 Col. Eileen Collins Blvd.
Syracuse, New York 13212
Phone: (315) 455-2000
Fax: (315) 455-9667
www.cscos.com

East Glen Ave. over I-81 NB and SB – BIN 1031510



DESCRIPTION: BRIDGE ELEVATION – SPAN 1

PHOTO 25



DESCRIPTION: BRIDGE DECK – END APPROACH

PHOTO 26

C&S Engineers, Inc.
499 Col. Eileen Collins Blvd.
Syracuse, New York 13212
Phone: (315) 455-2000
Fax: (315) 455-9667
www.cscos.com

East Glen Ave. over I-81 NB and SB – BIN 1031510



DESCRIPTION: BRIDGE DECK – BEGIN APPROACH

PHOTO 27

DESCRIPTION:

PHOTO 28

BIN 1031510

IT IS A VIOLATION OF LAW FOR ANY PERSON, UNLESS THEY ARE ACTING UNDER THE DIRECTION OF A LICENSED PROFESSIONAL ENGINEER, ARCHITECT, LANDSCAPE ARCHITECT, OR LAND SURVEYOR, TO ALTER AN ITEM IN ANY WAY. IF AN ITEM BEARING THE STAMP OF A LICENSED PROFESSIONAL IS ALTERED, THE ALTERING ENGINEER, ARCHITECT, LANDSCAPE ARCHITECT, OR LAND SURVEYOR SHALL STAMP THE DOCUMENT AND INCLUDE THE NOTATION "ALTERED BY" FOLLOWED BY THEIR SIGNATURE, THE DATE OF SUCH ALTERATION, AND A SPECIFIC DESCRIPTION OF THE ALTERATION.

DESIGN SUPERVISOR JOHN SEXTON JOB MANAGER JIM DUSSING DESIGNED BY RAY MATHURA CHECKED BY JIM DUSSING ESTIMATED BY NICK HUFFMAN DRAFTED BY KATHY BAKER CHECKED BY ALEX MASON

FILE NAME = 350151_01_1031510_PLN_ELEV.DGN
DATE/TIME = 14-MAR-2012 10:31
USER = kbaker

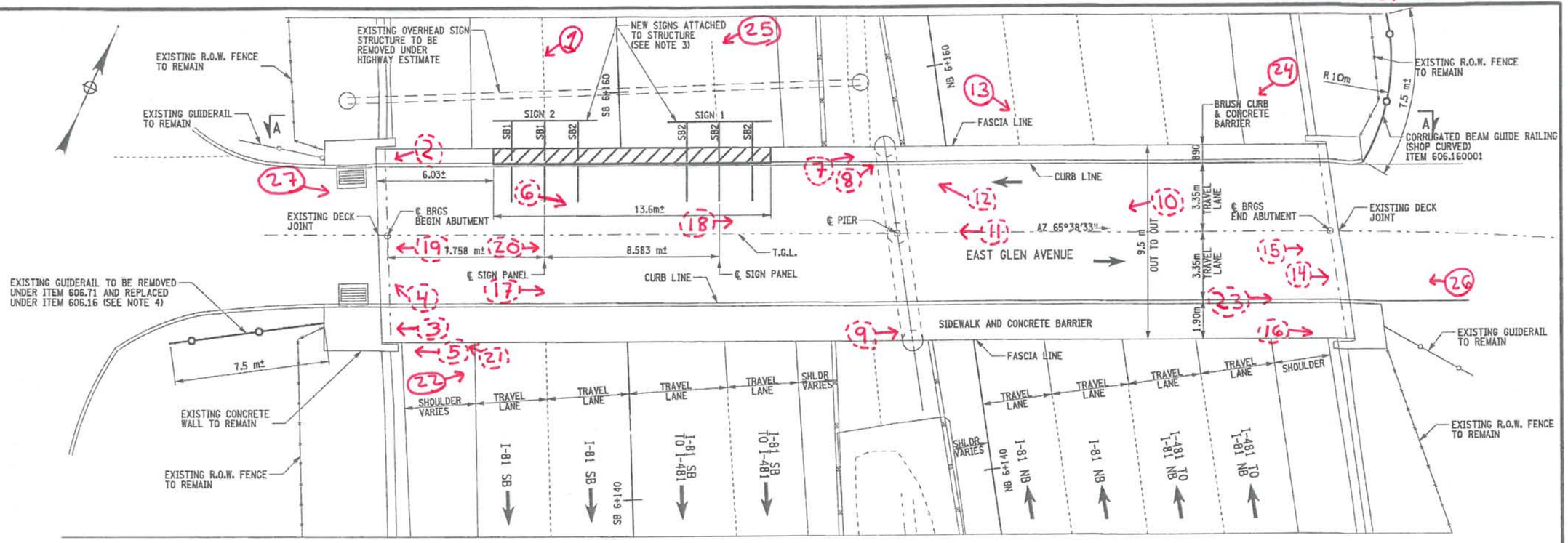

PLAN

WORK TO BE DONE:

1. ESTABLISH WZTC (WORK ZONE TRAFFIC CONTROL)
2. REMOVE EXISTING OVERHEAD SIGN STRUCTURE
3. REMOVE NORTH FASCIA CONCRETE DECK OVERHANG AS SHOWN, REPLACE WITH NEW DECK OVERHANG CONCRETE AND INSTALL TWO NEW SIGN STRUCTURES
4. REMOVE DAMAGED GUIDERAIL AT NE AND SW CORNERS AND REPLACE WITH NEW CORRUGATED BEAM GUIDE RAILING.
5. CLEAN TOP OF CURBS (BOTH SIDES) AND APPLY PROTECTIVE SEALING, ITEM 559.16960118.

LEGEND:

ITEM 580.01 - REMOVAL OF STRUCTURAL CONCRETE AND
ITEM 555.09 - CONCRETE FOR STRUCTURES, CLASS HP

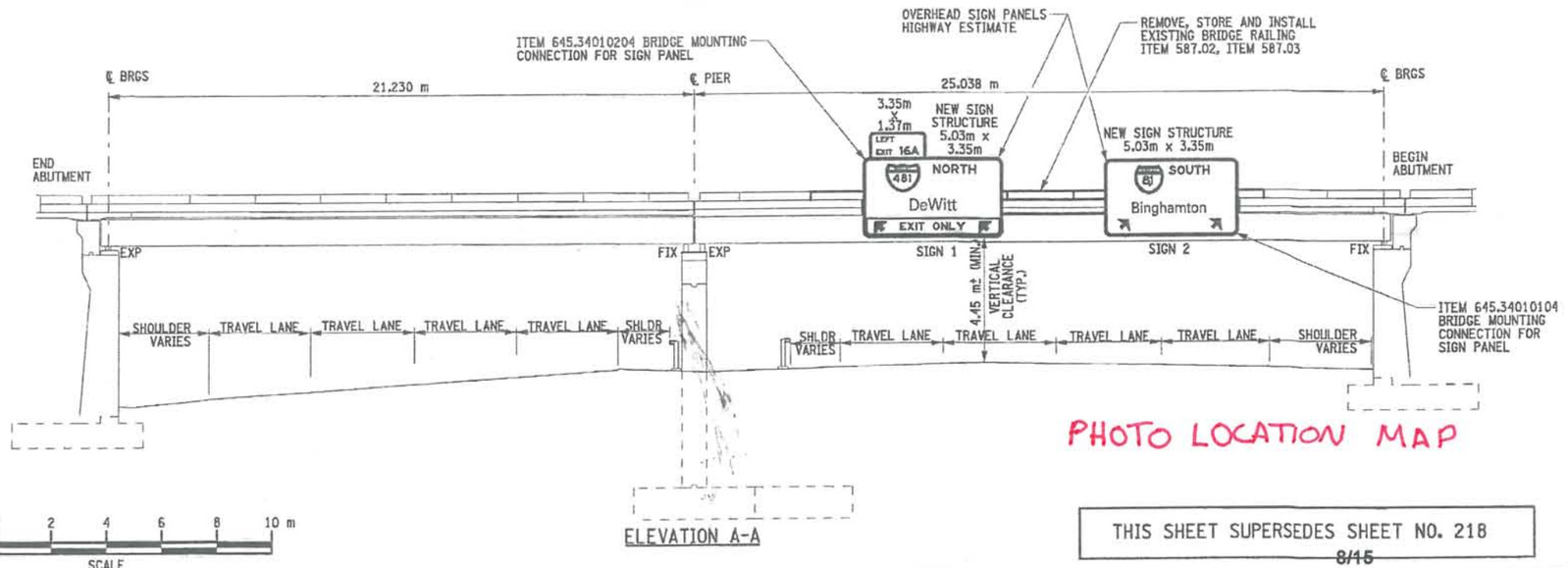

ELEVATION A-A

PHOTO LOCATION MAP

2 0 2 4 6 8 10 m
SCALE

PREPARED BY: ON: 3/14/12

ALTERED BY: ON:

STATE OF NEW YORK * JAMES MICHAEL DUSSING * LICENSED PROFESSIONAL ENGINEER NO. 077415

AS BUILT REVISIONS
DESCRIPTION OF WORK:

SIGNATURE DATE

I-81 NY173 TO DOWNTOWN VIADUCT
NEW SIGN STRUCTURE
EAST GLEN AVENUE OVER I-81
CITY OF SYRACUSE
COUNTY: ONONDAGA

PIN 3501.51
PS&E DATE

BRIDGES 1031510

CULVERTS

ALL DIMENSIONS IN mm UNLESS OTHERWISE NOTED

PLAN AND ELEVATION

THIS SHEET SUPERSEDES SHEET NO. 218 ~~8/15~~

CONTRACT NUMBER D261956

DRAWING NO. ST2-01
SHEET NO. 218A1

DOCUMENT NAME: 350151_01_1031510_PLN_ELEV.DGN

NEW YORK STATE DEPARTMENT OF TRANSPORTATION REGION 03

ASBESTOS DOCUMENTATION

ASBESTOS DOCUMENTATION FROM WATTS ARCHITECTURE & ENGINEERING, INC.

(WILL REPLACE BIN FOLDER ASBESTOS REPORT UPON COMPLETION)

Asbestos Sampling Survey

Location:

BIN 1-03151-0
East Glen Avenue over Interstate Route I-81

Prepared for:

New York State
Department of Transportation

PIN 3804.09.101

LaBella Project No. 97132

May, 1999

Table of Contents

Page

I. Project Summary 1

II. Site Description 1

III. Inspection Procedures 1

IV. Results 2

Certification 2

Figures and Table

I. Project Summary

In accordance with conditions of Term Agreement D010010, LaBella Associates, P.C. conducted an asbestos sampling survey of the East Glen Avenue Bridge over Interstate Route I-81. Based on laboratory analyses of bulk samples collected, the following materials were determined to contain asbestos:

BIN 1-03151-0 East Glen Avenue over Interstate Route I-81

Type of Material	Estimated Amount
Sheet Packing	6 Square Meters
Caulking Compound	3.4 Linear Meters *

* Indicates approximate amount of caulking compound located on the bridge itself. An additional 110 linear meters of caulking compound are located in the expansion joints on the east and west retaining walls of the bridge. See report.

II. Site Description

The Site is located in Onondaga County, New York. For the purpose of this report, the Site consists of the East Glen Avenue Bridge over Interstate Route I-81 (See attached FIGURE 1 - Site Location Map).

III. Inspection Procedures

The following procedures were used to obtain the data for this Report:

A. A review of record drawings supplied by Region 3 personnel and a visual inspection of the subject structure were conducted to identify potential visible/accessible sources of asbestos-containing materials. Observations and notes were made to provide a description of the structure, and an estimate of the approximate amount, length, or area of ACM present.

B. Physical or operational constraints which might affect the removal of the ACM were identified and reported.

C. Bulk samples of suspected ACM were collected during the site inspection of the subject structure. Samples were taken from each homogeneous area that may contain ACM.

D. Samples were submitted for analysis. Preliminary PLM analyses of NOB materials were performed by LaBella Laboratories, a NYSDOH approved laboratory, to determine the presence and percentage of asbestos in each sample. TEM analyses of NOB materials, if necessary, were performed by New York Testing Laboratories, Inc.

E. Lab results were used to determine the approximate location, type, and amount of the verified ACM.

F. A drawing of the structure at the Site was created, in order to show sample locations and the approximate locations and amounts of confirmed ACM observed in accessible locations.

Only accessible areas were inspected. Inaccessible areas, such as areas within the bridge or the approaches to the bridge were not included in this inspection. No investigation was conducted by LaBella Associates to determine the presence of underground utilities on or in the immediate vicinity of the Site. Actual sample locations are shown in the attached FIGURE 2. Results of bulk sample analyses are tabulated in the attached TABLE.

IV. Results

BIN 1-03151-0 East Glen Avenue over Interstate Route I-81

Sheet Packing

Asbestos-containing sheet packing is located between the tops of the abutments and the deck slab at both ends of the bridge. Most of this material is presently covered by the bridge deck, although the edges of this sheet packing are exposed and visible at various locations.

It is estimated that the total amount of this asbestos-containing sheet packing material on the bridge is approximately 6 square meters. This estimate is based on field measurements taken at the time of the site visit.

The approximate locations of this asbestos-containing sheet packing are shown in FIGURE 2.

Caulking Compound

Asbestos-containing caulking compound is located around some of the guide rail base plates on both the north and south parapet walls of the bridge. This caulking compound is in fair condition and covers approximately 3.4 linear meters. This estimate is based on field measurements taken at the time of the site visit.

An additional 110 linear meters of caulking compound are located in the expansion joints on the east and west retaining walls of the bridge. This caulking compound is also in fair condition, exhibiting some sign of weathering in many locations.

The approximate locations of this asbestos-containing culking compound are shown and noted in FIGURE 2.

Certification

LaBella Associates, P.C. certifies the accuracy of this report, to the best of our knowledge, based on the information collected as described in the Inspection Procedures Section of this investigation.

Figures & Table

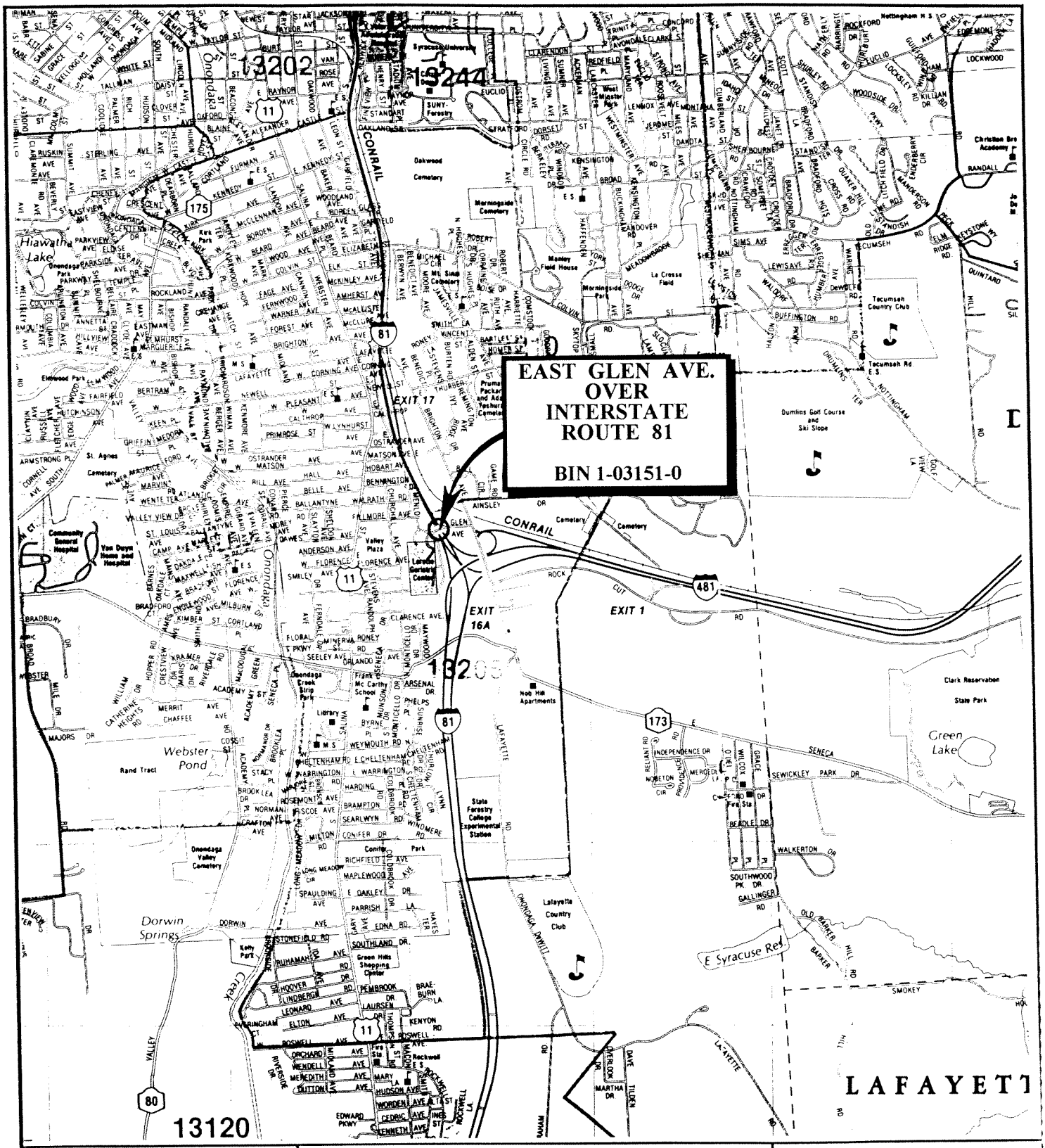

N

SCALE: 1" = 2000'

FIGURE 1
Site Location Map

East Glen Ave. over
Interstate Route 81
Syracuse, New York

LABELLA

PROJECT NO. 97132

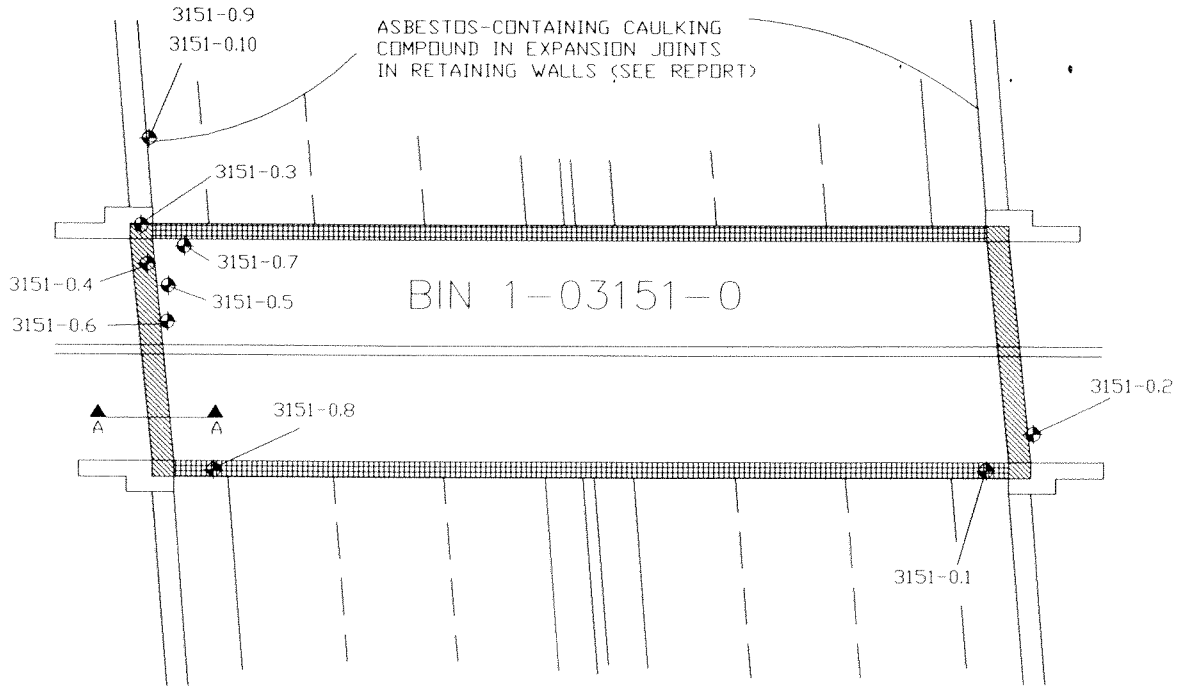

LEGEND

- 3151-0.1 SAMPLE LOCATION
- ASBESTOS-CONTAINING SHEET PACKING
- ASBESTOS-CONTAINING CAULKING COMPOUND

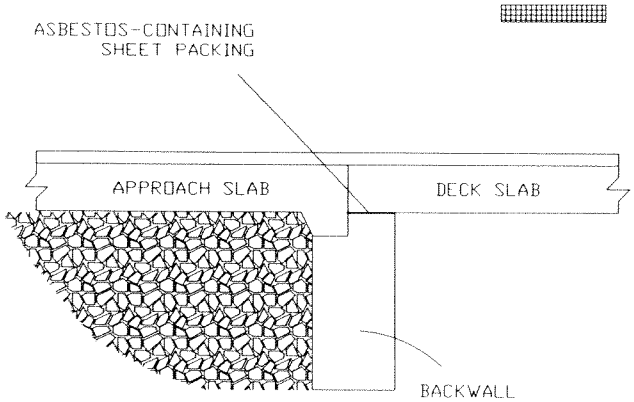

SECTION A-A

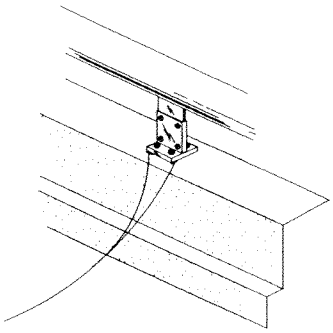

TYPICAL RAILING/ PARAPET DETAIL

SPOTTY APPLICATION OF ASBESTOS-CONTAINING CAULKING COMPOUND AROUND SOME GUIDE RAIL BASE PLATES (TYP.)

NORTH

PROJECT TITLE: ASBESTOS SAMPLING SURVEY
7 BRIDGES, ONONDAGA & OSWEGO COUNTIES, NEW YORK

PROJECT NO. 97132

PIN 3804.09.101

FIGURE TITLE: FIGURE 2
EAST GLEN AVE. OVER I-81
BIN 1-03151-0
SAMPLE LOCATIONS AND CONFIRMED ACM

NOT TO SCALE

DATE: MAY, 1999

Bulk Sample Results Table

Asbestos Sampling Survey
BIN 1-03151-0
East Glen Avenue over Interstate Route I-81
Onondaga County, New York
LaBella Project # 97132
PIN 3804.09.101

Sample #	Sample Location	Type of Material	Results % Asbestos	Amount of Material	Specification Item No.
3151-0.1	**South Side of Bridge, Beneath Guide Rail**	**White Caulking Compound**	**14% Chrysotile**	**3.4 Linear Meters**	**15202.0629 (M)**
3151-0.2	South Side of Bridge, in Expansion Joint	Joint Sealer	None Detected	N/A	N/A
3151-0.3	West End of Bridge, Between Deck & Cheek Wall	Joint Filler	None Detected	N/A	N/A
3151-0.4	**West End of Bridge Between Deck & Abutment**	**Sheet Packing**	**34% Chrysotile**	**6 Square Meters**	**15202.0627 (M)**
3151-0.5	West End of Bridge, Beneath Bearing	Bearing Pad	None Detected	N/A	N/A
3151-0.6	West End of Bridge on Back Wall	Gray Masonry Coating	None Detected	N/A	N/A
3151-0.7	West End of Bridge, on Inside I-Beam	Green Paint	None Detected	N/A	N/A
3151-0.8	West End of Bridge, on South I-Beam	Green Paint	None Detected	N/A	N/A
3151-0.9	**Beneath Bridge on Retaining Walls**	**White Caulking Compound**	**10% Chrysotile**	**110 Linear Meters**	**15202.0629 (M)**
3151-0.10	Beneath Bridge on West Retaining Wall	Joint Filler	None Detected	N/A	N/A

HUDSON ENVIRONMENTAL SERVICES, INC.
Mail: 22 Hudson Falls Rd., So. Glens Falls, NY 12803
Delivery: 211 Ferry Blvd., So. Glens Falls, NY 12803
Phone: 518/747-1060 Fax: 518/747-1062

ANALYTICAL TEST RESULTS
N.Y.S.D.O.H. LAB ID#11140
*ANALYZED BY N.Y.S.D.O.H. LAB ID#10898

CLIENT: NYSDOT Region 3

SAMPLE DESCRIPTION: See Below

MATRIX: Solid

LOCATION: Bin 1031510

H.E.S. #: See Below

DATE SAMPLED: 06/16/03

TIME SAMPLED: Not Specified

DATE SAMPLE RECD: 6/23/03

TYPE SAMPLE: Grab

SAMPLER: GC/NYSDOT

NOB BULK MATERIAL ANALYSIS FOR ASBESTOS

TEST METHOD:EPA-600 93/116 JULY 1993 NYSDOH ELAP 198.1 AND 198.4

HES LAB ID#: 030623B	B01	B02	B03
LAB ID#: E03	1680	1681	1682
CLIENT: SAMPLE ID/DESCRIPTION	1031510 01	1031510 02	1031510 03
COLOR	Green	Green	Green
HOMOGENEOUS(YES/NO)	Yes	Yes	Yes
ORGANIC %	46	47	44
ACID-SOLUBLE INORGANICS %	4	4	6
INSOL NON-ASBESTOS INORGANIC %	50	49	50
ASBESTOS ANALYSIS			
CHRYSOTILE %			
AMOSITE %			
CROCIDOLITE %			
OTHER AMPHIBOLE %			
TOTAL ASBESTOS % (PLM)	ND	ND	ND
ASBESTOS ANALYSIS			
TYPE OF ASBESTOS			
PERCENTAGE OF ASBESTOS (TEM)	ND	ND	ND
TOTAL	100	100	100

Approval By: [signature]

Date: 7/2/03

Hudson Environmental Services, Inc. certifies that the services provided were performed in accordance with the New York State Department of Health, Environmental Laboratory Approval Program certification manual. This report shall not be reproduced without written consent from HES, Inc. In the event of an error, HES's sole responsibility will be to perform reanalysis at its own expense. HES, Inc. assumes no other liability for damages incurred from the interpretation or use of the analysis provided.

(OVER)

HUDSON ENVIRONMENTAL SERVICES, INC.

Mail: 22 Hudson Falls Road, South Glens Falls, NY 12803
Delivery: 211 Ferry Blvd., South Glens Falls, NY 12803
Phone: 518/747-1060 Fax: 518/747-1062

CHAIN OF CUSTODY RECORD/ Lab Work Request

Client NYS Dept. of Transportation-Region 3
Client Contact/Person # Christopher Anderson
Project Location B.I.N.
Purchase Order
HES Contact William Frawley

Mail Address NYS Dept. of Transportation
333 E. Washington Street
Syracuse, NY 13202
Phone # (315) 428-4628

HES Use Only Lab ID	Sample ID / Description	Date Collected	TIME A=a.m. P=p.m.		SAMPLE TYPE C=Composite G=Grab MATRIX	C	G	# Conts.	ANALYSIS REQUIRED
330423 B01	1031510,01	6/5/03		A P	SO		X	1	Asbestos Bulk - NOB
				A P					
B02	1031510,02	6/4/03		A P	SO		X	1	" " "
				A P					
B03	1031510,03	6/4/03		A P	SO		X	1	" " "
				A P					
				A P					
				A P					

Matrix: S - Soil; SE - Sediment; SO - Solid; SL - Sludge; O - Oil; DW - Drinking Water; GW - Ground Water; SW - Surface Water; L - Leachate; A - Air; WI - Wipe; DS - Drum Solids; DL - Drum Liquids; X - Other; WW - Waste Water

Special Instructions: Bridge coating - If PLM negative, TEM confirmation on all.

Sampled by: (Signature)	Date/Time	Received by: (Signature)	Date/Time 6/24/03 11:56AM
Relinquished by: (Signature)	Date/Time	Received by: (Signature)	Date/Time
Relinquished by: (Signature)	Date/Time	Received by: (Signature)	Date/Time
Dispatched by: (Signature)	Method of Shipment:		Date/Time
Received at Laboratory by:	Date/Time 6/25/03 8:00AM	Turnaround Time: Normal	Lab Approval:

HES Use Only

Samples Were:
1. Shipped or Hand Delivered NOTES:
2. Ambient or Chilled NOTES: 22
3. Received Broken/ Leaking (Improperly Sealed) Y N NOTES:
4. Properly Preserved NOTES: Y N
5. Received Within Holding Times Y N NOTES:

COC Tape Was:
1. Present on Outer Package Y N
2. Unbroken on Outer Package Y N
3. Present on Sample Y N
4. Unbroken on Sample NOTES: Y N

COC Record Was:
1. Present upon Receipt of Samples Y N

Discrepancies Between Sample Labels and COC Record? Y N NOTES:

WHITE - Lab Copy YELLOW - Sampler Copy PINK - Generator Copy

Jul-01-03 08:58A Ved P. Kukreja, Ph.D. P.05

NEW YORK STATE
DEPARTMENT OF TRANSPORTATION
D031085 P.I.N 3501.60

LEVEL 1 LOAD RATING
B.I.N. 1031510
I-81 over East Glenn Ave

LOAD RATING SUMMARY TABLE (LOAD FACTOR)					
CONTROLLING MEMBER	**CONTROLLING PARAMETER**	**LIVE LOAD**	**LIVE LOAD TYPE**	**INVENTORY RATING**	**OPERATING RATING**
(S2/ G3) INTERIOR GIRDER	SERVICE	HS20-44	Axle Load	HS 21.5 (38.72 TONS)	HS 35.9 (64.66 TONS)
(S2/ G3) INTERIOR GIRDER	SERVICE	ALTERNATE MILITARY LOADING	Axle Load	1.33 (31.85 TONS)	2.22 (53.19 TONS)

DOES NOT INCLUDE FUTURE WEARING COURSE

ANALYSIS METHOD:LOAD FACTOR

RECOMMENDED POSTING AS-IS CONDITION: _____ Tons _X_ None

CALCULATED BY:



DATE: 4/23/14

QUALITY ASSURANCE BY:



DATE: 5/09/14

C&S COMPANIES

499 Col. Eileen Collins Blvd.
Syracuse, NY 13212
phone 315-455-2000
fax 315-455-9667
www.cscos.com

ENGINEERS
DESIGN BUILD
TECHNICAL RESOURCES
OPERATIONS

C&S Companies

C&S Engineers, Inc.
Syracuse Hancock International Airport
Syracuse, NY 13212
phone 315-455-2000
fax 315-455-9667
www.cscos.com

TECHNICAL MEMORANDUM

TO: FILE (190.514.001)

FROM: JESSICA S. BAUER, P.E.
NYSPE 084915

DATE: MARCH 24, 2014

C&S PROJECT NO.: 190.514.001

RE: SEISMIC ASSESSMENT SUMMARY
NEW YORK STATE DEPARTMENT OF TRANSPORTATION
D031085; PIN 3501.60; I-81

BIN: 1031510 Seismic Assessment

This memorandum summarizes the seismic assessment conducted for BIN 1031510 as part of the Interstate 81 Project in Syracuse, NY. The purpose of the assessment is to determine if seismic retrofits are warranted at the superstructure to substructure connection, and if further seismic evaluation of the structure is required. This memorandum will give the assessment results, retrofits required and recommendations for further seismic evaluation of the structure.

ASSESSMENT PROCEDURE

The seismic assessment was performed in accordance with the FHWA Seismic Retrofitting Manual for Highway Structures: Part 1 - Bridges, January 2006. As per the referenced manual, seismic assessment was performed for both lower level and upper level earthquake ground motion. The lower level earthquake ground motion has a reasonable likelihood of occurrence within the life of the bridge (50% probability of exceedance within a 75 year bridge life). The upper level earthquake ground motion has a finite likelihood of occurrence within the life of the bridge (7% probability of exceedance within a 75 year bridge life).

Values for the spectral acceleration for the Syracuse area used in the assessment are as follows:

- Lower Level Earthquake Ground Motion for a Short Period (0.2 seconds): $S_S = 0.0251$
- Lower Level Earthquake Ground Motion for a Long Period (1.0 seconds): $S_1 = 0.0076$
- Upper Level Earthquake Ground Motion for a Short Period (0.2 seconds): $S_S = 0.139$
- Upper Level Earthquake Ground Motion for a Long Period (1.0 seconds): $S_1 = 0.047$

These values are considered constant and are the same for all seismic assessments of bridges in the Syracuse area.

The Site Class is based on the soil conditions at the bridge location. It was determined that this parameter has little effect on the results of the seismic assessment because the spectral

You created this PDF from an application that is not licensed to print to novaPDF printer (http://www.novapdf.com)

acceleration values for the Syracuse area are small. Based on this, a site class of D was used for all seismic assessments of bridges in the Syracuse area.

Bridge parameters used in the seismic assessment were retrieved from the record drawings and WinBolts data.

The seismic assessment takes into account the anticipated service life, importance, and the seismic exposure of the bridge to determine a seismic retrofit category (SRC). The SRC is then used to determine seismic evaluation methods and retrofit measures. There are four SRCs, A through D. Seismic retrofit category A is the lowest category; bridges in this category do not require retrofits or further seismic evaluation. Seismic retrofit category D is the highest category; bridges in this category requiring the most rigorous seismic evaluations and retrofits.

ASSESSMENT RESULTS

The SRC for the bridge is "**C**" for lower level earthquake ground motion and "**B**" for upper level earthquake ground motion.

RETROFITS REQUIRED

Bearing replacements and seat width improvements are not required at the abutments or pier. Additional retrofits may be required if further seismic evaluation is needed.

RECOMMENDATIONS FOR FURTHER SEISMIC EVALUATION

No further seismic evaluation is required for lower level earthquake ground motion. For the upper level earthquake ground motion, it is recommended that the capacities of the bearings are checked as per Section 5.2 of the referenced manual.

Retrofit cost estimates will be provided after any further required seismic evaluations are completed.

You created this PDF from an application that is not licensed to print to novaPDF printer (http://www.novapdf.com)

ENGINEERS
DESIGN BUILD
TECHNICAL RESOURCES
OPERATIONS

C&S Companies

C&S Engineers, Inc.
Syracuse Hancock International Airport
Syracuse, NY 13212
phone 315-455-2000
fax 315-455-9667
www.cscos.com

TECHNICAL MEMORANDUM

TO: **FILE (190.514.001)**

FROM: **PAUL F. BYRNE, P.E.**
NYSPE 055928

DATE: **JUNE 4, 2014**

C&S PROJECT NO.: 190.514.001

RE: **NEW YORK STATE DEPARTMENT OF TRANSPORTATION**
D031085; PIN 3501.60; I-81 Opportunities, BIN 1031510 Fatigue Evaluation

---

This memorandum documents a fatigue evaluation conducted for the existing Interstate 81 Viaduct Project. Existing structures with AASHTO Category D, E, and E' fatigue-prone details require 100% hands-on inspection unless proven to be exempt. The purpose of the evaluation is to assess the remaining life of fatigue-prone components.

EVALUATION PROCEDURES

The fatigue evaluation was performed in accordance with the AASHTO Guide Specification for Fatigue Evaluations of Existing Steel Bridges, 1990. Fatigue-prone welds identified in the biennial inspection reports were located on record drawings and confirmed visually in the field. Additional information concerning fatigue-prone welds located in BIN folders was also obtained and reviewed prior to inspection.

EVALUATION RESULTS

The results of the fatigue evaluation of the existing bridge are shown below. The remaining safe fatigue life of the fatigue components have **not** been **exhausted**.

Fatigue Detail Location	Remaining Safe Fatigue Life (Years)	Remaining Mean Fatigue Life (Years)
Span 1, Interior Girders, End of Bottom Flange Cover Plate	1079	5487
Span 2, Interior Girders, End of Bottom Flange Cover Plate	602	3139

E. Recommendations

The purpose of this deck evaluation is to document and determine existing conditions of the deck. It will be used as a tool for developing the scope of work and cost estimates for the development and comparison of alternatives for the overall project.

The total damaged area is approximately 13% of the total deck area. Due to the age, condition and chloride-ion content of the bridge deck concrete, the bridge deck should be rehabilitated or replaced to meet current design standards and to mitigate excessive future maintenance costs.

Option 1 – Scarify and Bridge Deck Overlay
The maximum service life this option would provide is 25 years. The design life of this project is 30 years (ETC + 30). This option does not meet the project objective of obtaining 30+ years of service life.

Option 2 – Bridge Deck Rehabilitation with 100% Deep Removal
This option will involve partial depth reconstruction with top mat rebar exposure of the entire bridge deck to remove the chloride contaminated concrete (100% deep removal). The existing bridge deck thickness is 8” with 1” of concrete cover over the top mat of reinforcing. The proposed partial depth reconstruction will include the addition of 1 ½” of concrete to provide the standard 9 ½” bridge deck thickness. The existing top mat of reinforcing bars will be removed and replaced to accommodate the standard 3” of concrete cover. The existing parapet wall and safety walk along the north side of the bridge will be removed and replaced with a single-slope concrete barrier. The existing parapet wall and 4’-7” wide sidewalk along the south side of the bridge will be removed and replaced with a 5-foot wide sidewalk and vertical-faced concrete barrier with pedestrian fence attached to the top of the barrier. The existing elastomeric bridge joints will be replaced with new armorless bridge joints. The approaches will also be

resurfaced. The Level 1 Load Rating for the final condition was found to be acceptable. This option would provide a service life of 35 years to the bridge deck. The construction cost of this option is $ 0.611 million.

Option 3 – Bridge Deck Replacement with Cast-In-Place Concrete

This option would involve the complete removal of the bridge deck, elastomeric bridge deck joints, parapet wall and safety walk with curb from the north side of the bridge and the parapet wall and sidewalk with curb on the south side of the bridge. The bridge deck would be replaced with a new concrete deck, new sidewalk and curb with vertical faced parapet concrete barrier and pedestrian fencing on top of the barrier on the south side of the bridge and new single-slope concrete barrier on the north side of the bridge and new armorless bridge joints. The new bridge deck would be 9 ½" standard thickness as compared to the 8" existing thickness. The Level 1 Load Rating for the final condition was found to be acceptable. This option would provide a service life of 40 years to the bridge deck. The construction cost of this option is $ 0.605 million.

Option 4 – Bridge Deck Replacement with Pre-cast Concrete Deck Panels

This option will have the highest construction cost of all the options; however, traffic control costs may be lower due to the reduced construction time. Comparison of accelerated construction versus conventional construction is beyond the scope of work for this project at this time.

IN DEPTH INSPECTION REPORT

D031085 P.I.N. 3501.60

B.I.N. 1031539

TEAM LEADER Bruce Opalka, P.E. 60413
NYSPE LICENSE #

ASSISTANT TEAM LEADER Mike Rode

ASSISTANT TEAM LEADER Drew Fuller

ASSISTANT TEAM LEADER Dustin Trivisonno

FEATURE CARRIED I-81 Northbound & Southbound

FEATURE CROSSED Brighton Ave

DATE FIELD WORK BEGAN February 26, 2014

DATE FIELD WORK COMPLETED March 5,2014

TABLE OF CONTENTS

- TP 349 & 350
- IN-DEPTH CONDITION DOCUMENTATION
- IN-DEPTH PHOTO DOCUMENTATION
- ASBESTOS REPORT

TP 349 & TP 350

BRIDGE ELEMENT RATINGS

Inspection Date: 9/17/2013 RC: 33 BIN: 1031539

Bridge Ratings

Carried: 81I 81I33032024 Crossed: EAST BRIGHTON AVE CheckValue: 1,821,614,534

Inspection Agency: 10 - NYSDOT Type of Inspection: 1 - BIENNIAL
GTMS: 302 -- Steel - Stringer/Multi-Beam or Girder
POSTINGS: See Gen Rec Page 1 for Postings at time of inspection.
Further Investigation Needed: No
State Highway Number: 64-7 Milepoint: 17.32 AADT/Yr: 48400 / 2009
Orientation: 1 - North Political Unit: 2055 - City of SYRACUSE Year Built: 1965
Total Spans: 3 Ramp Bridge Attached To Span: NA BIN: NA
General Recommendation: 5 Computed Condition Rating: 4.672

Abutment Ratings:	Beg Abut	End Abut
Joint with Deck	5	5
Bearings, Bolts, Pads	5	5
Seats and Pedestals	6	6
Backwall	5	5
Stem (Breastwall)	8	8
Erosion or Scour	6	5
Footings	9	9
Piles	8	8
Recommendation	5	5

Wingwall Ratings:	Beg Abut	End Abut
Walls	4	4
Footings	9	9
Erosion or Scour	6	6
Piles	8	8

Channel Ratings:	Channel
Stream Alignment	8
Erosion and Scour	8
Waterway Opening	8
Bank Protection	8

Approach Ratings:	Approaches
Drainage	5
Embankment	6
Settlement	6
Erosion	6
Pavement	6
Guide Railing	5

Number of Flags Issued:

RED: 0 Yellow: 0 Safety: 0

Vulnerability Reviews Recommended: 1=Yes, 2=No, 3=NA, X=NotActive

Hydraulic: 3	Overload: X	Steel: 3
Collision: 3	Concrete: X	Seismic: X

Inspector's Signature: CheckValue: 1,821,614,534 Date: 9/17/2013

Dennis Conley,PE () (Inspector ID:3000063)

Signed copy of this inspection report is available in the appropriate NYSDOT Regional Office

Reviewed By: Date: 10/16/2013

James R. Manning,PE () (QC ID:3000023)

Signed copy of this inspection report is available in the appropriate NYSDOT Regional Office

Inspection Date: 9/17/2013 RC: 33 BIN: 1031539

Span Ratings

Carried: 81I 81I33032024 Crossed: EAST BRIGHTON AVE CheckValue: 1,821,614,534

Deck Element Ratings:	001	002	003
Wearing Surface	6	6	5
Curbs	5	5	5
Sidewalks, Fascias	3	3	3
Railings, Parapets	6	5	6
Scuppers	8	8	8
Gratings	8	8	8
Median	7	7	7
Mono Deck Surface	5	5	5

Superstructure Ratings:	001	002	003
Structural Deck	5	5	4
Primary Members	5	5	4
Secondary Members	6	5	6
Paint	5	5	5
Joints	5	5	8
Recommendation	5	5	5

Pier Ratings:	001	002	003
Bearings, Bolts, Pads	6	6	8
Pedestals	6	6	8
Top of Cap or Beam	6	6	8
Stem Solid Pier	8	8	8
Cap Beam	5	5	8
Pier Columns	6	6	8
Footings	9	9	8
Erosion or Scour	6	6	8
Piles	9	9	8
Recommendation	6	6	8

Utility Ratings:	001	002	003
Lighting	6	6	6
Sign Structure	7	8	7
Utilities and Support	8	3	8

Field Notes:

Field Date	Arrival	Departure	Temp (C)	Temp (F)	Weather Conditions
9/16/2013	10:00:00 AM	12:00:00 PM		65	light rain
9/17/2013	3:00:00 PM	5:00:00 PM		68	sunny

IN-DEPTH CONDITION DOCUMENTATION

IN DEPTH INSPECTION REPORT

BIN 1031539

Visual Inspection

The bridge was originally built under contract F.I.C. 64-7. New armored joints and guide rail were installed under contract D253087 (‘87). Under contract D259742 Part 1 (10/04) concrete repairs to abutments and piers, armorless joints, and bearing restoration was performed. Part 2 (12/04) The fascia concrete parapets were removed to curb height, existing 2 railing system remained, and the enclosed 2” lighting conduit placed on the fascia sides. Under contract D261956 (12/11) a concrete median barrier was installed and full depth patches to the deck were done. Under contract D262431 new armorless joints will be installed above the piers.

Cracks, spalls, and other field observations are shown on the plans. Below is a brief summary of conditions for each feature.

Superstructure

Deck – See Bridge Deck Evaluation Report.

Steel – See Structural Steel Inspection Summary.

Bearings – Bearings are original. Bearings were restored under contract D259742 (4/04) with sheared anchor bolts replaced, new bronze sliding plates installed, and exp. bearings repositioned where needed. All bearings (fixed) on the South (beginning) abutment, pier bearings (fixed & exp. at both piers) and North (end) abutment (exp.) suffer paint loss to varying degrees with those below the leaking parts of the joints and fascias in worst condition. The bearings were rated 5 or 6 during the Biennial inspection.

Substructure

South Abutment (Begin) – The beginning left cheek wall is map-cracked throughout, however, there are heavier cracks with efflorescence (efflo) seepage in the wall at the top of the pedestal (ped) and across the inside face. There is full height moisture with efflo buildup on the backwall and pedestals at ped 3, between ped's 4 & 5, 7, 8, and 16. The longitudinal joint in the deck above and between ped's 7 & 8 is very porous and the moisture content at these ped's is high. The efflo buildup behind ped 16 is high with cracking and has resulted in full height spalling to 4" deep by 6" wide in the backwall corner with the 'U' wingwall. There is an existing cheekwall adjacent to ped 1 however; there is no existing cheekwall adjacent to ped 16. It appears the beginning right wingwall was prepared for resurfacing but never completed so now there is full height spalling to 4" deep by 48" wide back from backwall corner.

Pier #1 – The first four columns support the left capbeam and pedestals 1 – 7 while the next 5 columns support the right capbeam and pedestals 8 – 16, typical for Pier 2. Column 1 has a 2' wide by 4" high delamination (delam) on the begin face. All other columns in good condition. The capbeam has 2' wide by 2' high delams on both begin & end faces below ped 1. There is a 1'wide by 1' high delam on the begin face below right edge of ped 8. There is a horizontal crack with delaminated concrete in the end face 3" below the top edge between ped's 8 & 9. There is a 1' wide by 1' high delam on the begin face below right edge of ped 12. There is heavy map-cracking across the end face between ped's 14 & 15 and a sliver of efflo on the begin face at the left edge of ped 15. On the begin face directly below ped 16 the concrete is delaminated 3' high by 6' wide. There is active moisture and efflorescence build-up on and across and down the capbeam for pedestals 3, 5, 9, 10, 11, and 12. The back (end) edges of ped 7 for the span 1 have broken off clean leaving the masonry plate of the

bearing in the corner (1” by 1”) unsupported. There is map cracking across the right fascia and end faces of ped 16.

Pier #2 – All columns are in good condition except for column 16 which has a delaminated area 4’ high by 6’ wide on the begin face which wraps into the left face. Column 6 has full height efflo stains and water dripping on the begin face but is still in good condition. Ped 1 has minor vertical cracking in the middle of begin face for 6” wide. The capbeam has punky concrete for 3” high for 12” wide below ped 1 on the left begin & end faces and map cracking below ped 8 on the begin face. There is efflorescence and moisture build-up on and across and down the capbeam for pedestals 3, 5, 6, 7, 8, 10, 11, and 12. There are delaminated areas at ped 3; 1’ wide by 1’ high on end face, ped 7; 2’ wide by 1’ high on end face, below ped 14; 2’ wide by 2’ high on begin face, between ped’s 15 & 16; 2’ wide by 2’ high on end face, below ped 16; 6” high by 2’ wide on begin face, and on ped 16; 4’ wide by 1’ high on the begin face.

North Abutment (End) – It appears the end left wingwall was prepared for resurfacing but never completed so now there is full height spalling to 4” deep by 48” wide back from backwall corner. The backwall in this corner is also spalled with cracking and bleeding efflo. There is efflorescence and moisture build-up on the backwall and across the pedestals at ped’s 3, between 4 & 5, 7, 9, 12, and 16. The joint filler material is missing above pedestals 9 & 16. There is concrete debris from the deck haunch between ped’s 3 & 7. Behind ped 11 there is a delam 12” wide by full height. All of the pedestals are in good condition except for the moisture and efflorescence build-up and minor map cracking on pedestal 1. The end right cheekwall is in good condition.

STRUCTURAL STEEL INSPECTION SUMMARY

BIN 1031539

Special Emphasis Inspection Required

Non-Redundant/Fracture Critical Members – No
Pin and Hangers – No
Fatigue-Prone Welds – Yes; partial length coverplates on interior girders.
Non-Categorized Fatigue-Prone Details – No
Other (Specified in Text) – No

Special Emphasis Details

100% hands-on inspection was performed – a crack was found as detailed below.

Overall Steel Condition

Due to porous joints there is section loss in localized specific areas occurring in the steel below. This has been an ongoing condition resulting in a couple of different repairs to girders in the past. Except for the excessive losses detailed below, the steel is in good condition.

Paint

The paint has failed in all locations where the joints leak which includes the abutments, piers, and longitudinal deck joints and section loss is beginning to occur with excessive losses as detailed below. In all other locations the paint is in good condition.

Section Loss

There is localized excessive section loss at the following locations. At the end of Span 1, girder #7 has bottom flange loss of 15% for the last 18", as does the web at the bottom flange for a height of 3". There is additional web loss above the 3" previously mentioned for the last 12" by full height of 15%. There is comparable loss in the connection plates below the cross bracing from girder to girder. At the beginning of Span 3, girder #7 has bottom flange loss of 15% for the first 18". There is comparable web loss but at this time the loss remains mostly behind the centerline of the bearing. There is comparable loss in the connection plates below the cross bracing from girder to girder. At girder #16, Span 3, there is a small crack in the side (vertical edge) of the bottom flange in the area between the end of the full length cover plate and the beginning bearing face. NYSDOT was notified of this condition. The crack could have developed because the flange in this area had become so thin. The section loss for the bottom flange in this area is averaged to 55% in the range from 3.0" to 6.0" from the centerline of the beginning bearing. The Span 2, G-16 connection plate at this location previously thinned and cracked, where upon it was replaced and web stiffeners were also added to the Span 3, G-16 girder. None of the girders were originally constructed with web stiffeners.

BIN 1031539 - CORE LOCATIONS

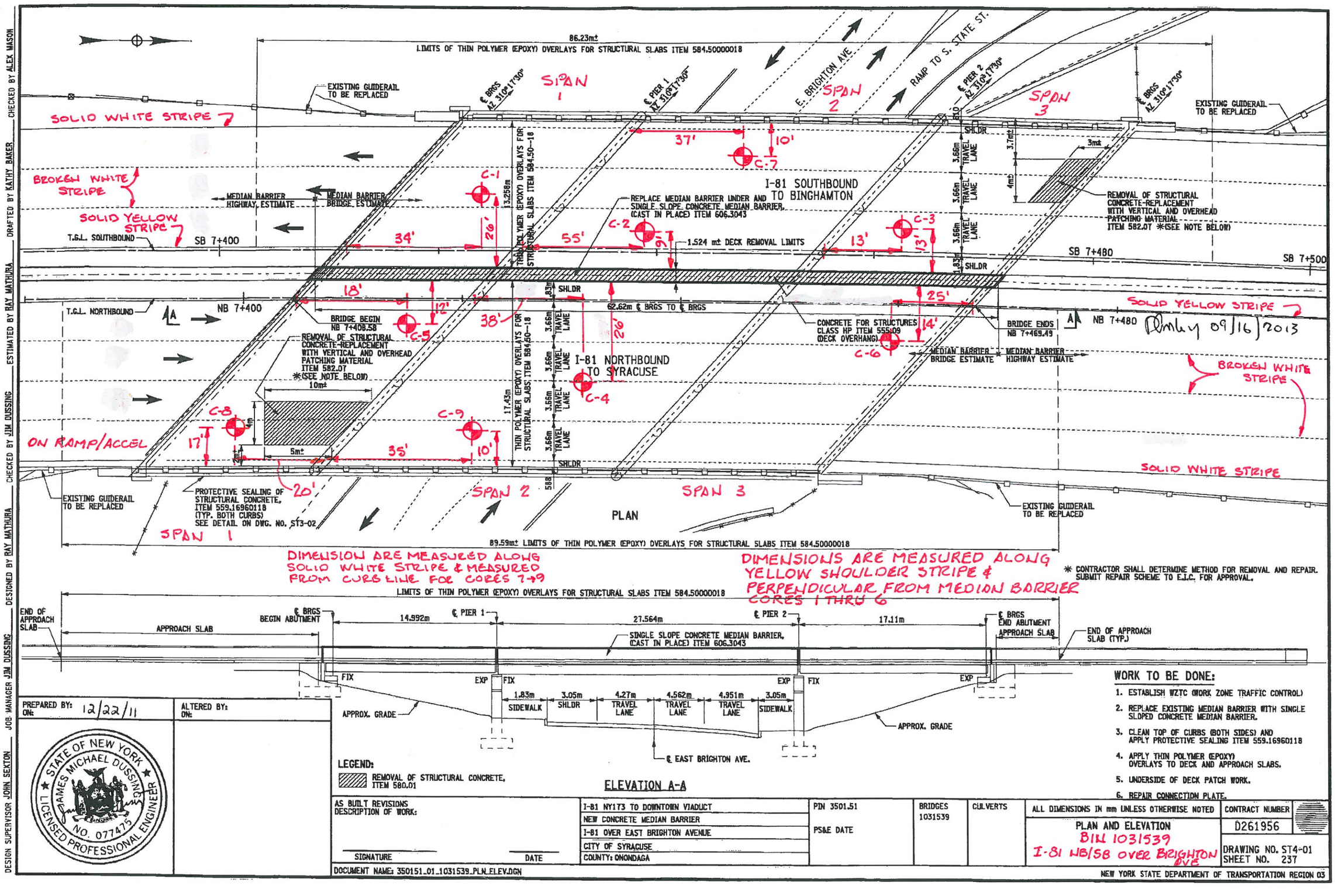

LEGEND:
REMOVAL OF STRUCTURAL CONCRETE, ITEM 580.01

ELEVATION A-A

WORK TO BE DONE:
1. ESTABLISH WZTC (WORK ZONE TRAFFIC CONTROL)
2. REPLACE EXISTING MEDIAN BARRIER WITH SINGLE SLOPED CONCRETE MEDIAN BARRIER.
3. CLEAN TOP OF CURBS (BOTH SIDES) AND APPLY PROTECTIVE SEALING ITEM 559.16960118
4. APPLY THIN POLYMER (EPOXY) OVERLAYS TO DECK AND APPROACH SLABS.
5. UNDERSIDE OF DECK PATCH WORK.
6. REPAIR CONNECTION PLATE.

PREPARED BY: 12/22/11
ALTERED BY: ON:

STATE OF NEW YORK · JAMES MICHAEL DUSSING · LICENSED PROFESSIONAL ENGINEER · NO. 077475

AS BUILT REVISIONS
DESCRIPTION OF WORK:
SIGNATURE DATE

DOCUMENT NAME: 350151_01_1031539_PLN_ELEV.DGN

I-81 NY173 TO DOWNTOWN VIADUCT
NEW CONCRETE MEDIAN BARRIER
I-81 OVER EAST BRIGHTON AVENUE
CITY OF SYRACUSE
COUNTY: ONONDAGA

PIN 3501.51
PS&E DATE

BRIDGES 1031539

CULVERTS

ALL DIMENSIONS IN mm UNLESS OTHERWISE NOTED

PLAN AND ELEVATION
BIN 1031539
I-81 NB/SB OVER BRIGHTON AVE

CONTRACT NUMBER D261956

DRAWING NO. ST4-01
SHEET NO. 237

NEW YORK STATE DEPARTMENT OF TRANSPORTATION REGION 03

Rmky 09/16/2013

IT IS A VIOLATION OF LAW FOR ANY PERSON, UNLESS THEY ARE ACTING UNDER THE DIRECTION OF A LICENSED PROFESSIONAL ENGINEER, ARCHITECT, LANDSCAPE ARCHITECT OR LAND SURVEYOR, TO ALTER AN ITEM IN ANY WAY. IF AN ITEM BEARING THE STAMP OF A LICENSEE IS ALTERED, THE ALTERING ENGINEER, ARCHITECT, LANDSCAPE ARCHITECT OR LAND SURVEYOR SHALL STAMP THE DOCUMENT AND INCLUDE THE NOTATION "ALTERED BY" FOLLOWED BY THEIR SIGNATURE, THE DATE OF SUCH ALTERATION, AND A SPECIFIC DESCRIPTION OF THE ALTERATION.

DESIGN SUPERVISOR JOHN SEKTON JOB MANAGER JIM DUSSING DESIGNED BY RAY MATHURA CHECKED BY JIM DUSSING ESTIMATED BY RAY MATHURA DRAFTED BY KATHY BAKER CHECKED BY ALEX WASON

FILE NAME = 350151_01_1031539_PLN_ELEV.DGN
DATE/TIME = 22-DEC-2011 09:38
USER = kbaker

BIN 1031539 - NB Plan View

LEGEND

- CORE LOCATION (C-X)
- PHOTO LOCATION (XX)
- DELAMINATION
- SPALLING
- CRACK
- MAP CRACKING
- MOISTURE

• Pavement damage Begin App. Slab

NOTE - FASCIA EXHIBITS MAP CRACKING AND LONGITUDINAL CRACKS, NUMEROUS SMALL SPALLS ON TOP EDGE.

IT IS A VIOLATION OF LAW FOR ANY PERSON, UNLESS THE PROFESSIONAL ENGINEER, ARCHITECT, LANDSCAPE ARCHITECT IF AN ITEM BEARING THE STAMP OF A LICENSED PROFESSIONAL LANDSCAPE ARCHITECT, OR LAND SURVEYOR SHALL STAMP FOLLOWED BY THEIR SIGNATURE, THE DATE OF SUCH ALTE

DESIGN SUPERVISOR JOHN SEXTON JOB MANAGER JIM DUSSING DESIGNED BY RAY MATHURA CHECKED BY JIM DUSSING QUANTITIES ESTIMATED BY RAY MATHURA

FILE NAME = 350151_01_1031539_PLN_ELEV.DGN
DATE/TIME = 22-DEC-2011 09:59
USER = rkmathur

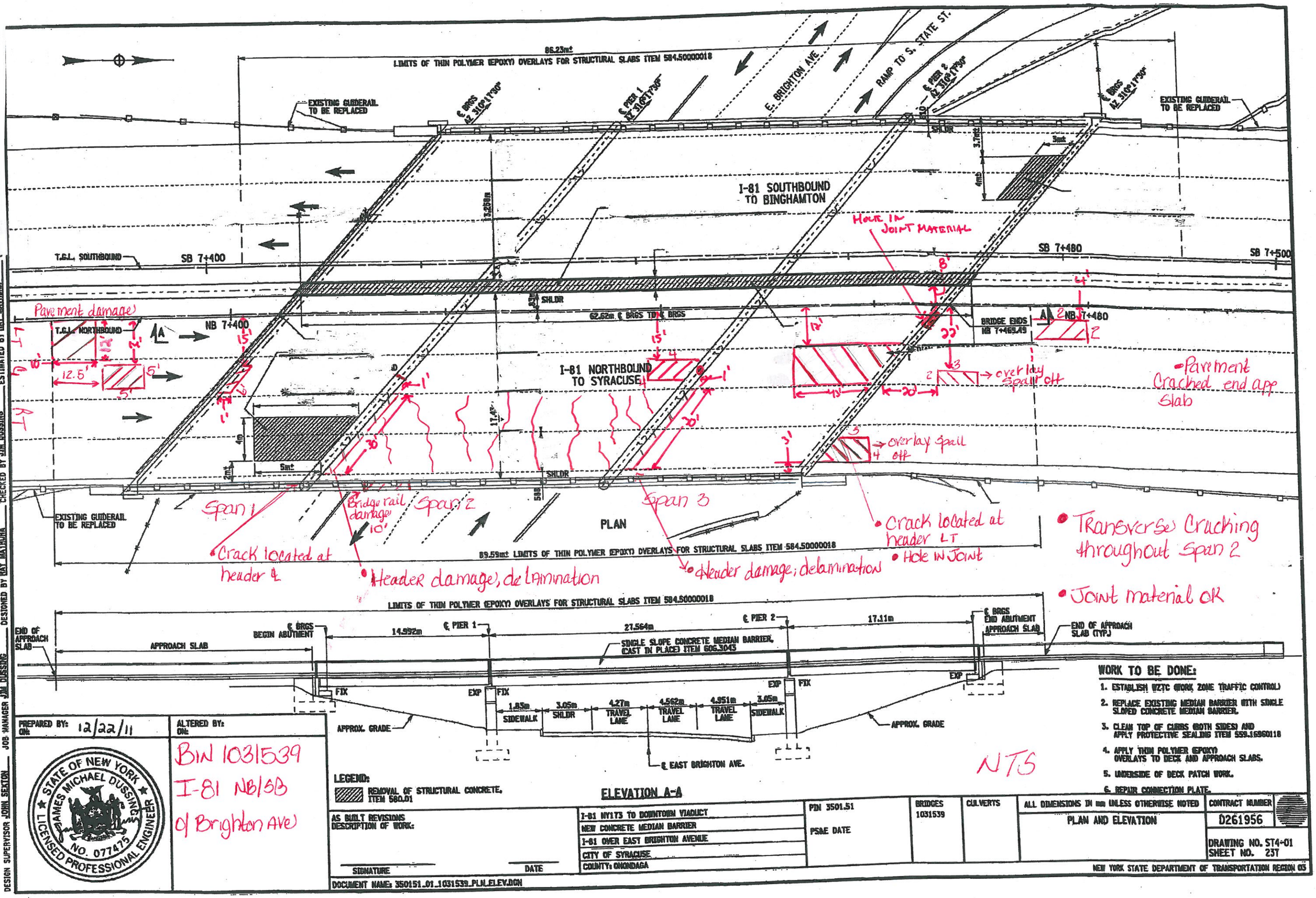

NTS

LEGEND:
REMOVAL OF STRUCTURAL CONCRETE, ITEM 580.01

WORK TO BE DONE:

1. ESTABLISH WZTC (WORK ZONE TRAFFIC CONTROL)
2. REPLACE EXISTING MEDIAN BARRIER WITH SINGLE SLOPED CONCRETE MEDIAN BARRIER.
3. CLEAN TOP OF CURBS (BOTH SIDES) AND APPLY PROTECTIVE SEALING ITEM 559.16960118
4. APPLY THIN POLYMER (EPOXY) OVERLAYS TO DECK AND APPROACH SLABS.
5. UNDERSIDE OF DECK PATCH WORK.
6. REPAIR CONNECTION PLATE.

PREPARED BY: RAY MATHURA ON: 12/22/11

ALTERED BY: ON:

BIN 1031539
I-81 NB/SB
o/ Brighton Ave)

STATE OF NEW YORK · JAMES MICHAEL DUSSING · LICENSED PROFESSIONAL ENGINEER · NO. 077475

AS BUILT REVISIONS
DESCRIPTION OF WORK:

SIGNATURE DATE

DOCUMENT NAME: 350151_01_1031539_PLN_ELEV.DGN

I-81 NY173 TO DOWNTOWN VIADUCT
NEW CONCRETE MEDIAN BARRIER
I-81 OVER EAST BRIGHTON AVENUE
CITY OF SYRACUSE
COUNTY: ONONDAGA

PIN 3501.51
PSAE DATE

BRIDGES 1031539

CULVERTS

ALL DIMENSIONS IN mm UNLESS OTHERWISE NOTED

PLAN AND ELEVATION

CONTRACT NUMBER D261956

DRAWING NO. ST4-01
SHEET NO. 237

NEW YORK STATE DEPARTMENT OF TRANSPORTATION REGION 05

BIN 1031539, SB, Plan View

LEGEND

- C-X — CORE LOCATION
- (XX) — PHOTO LOCATION
- DELAMINATION
- SPALLING
- CRACK
- MAP CRACKING
- MOISTURE

• Joint material at each Joint is good

• Crack located header @ ℄ & header damage LT

• Wide Spread misc. Cracks in Polymer

• Crack located header RT/℄

• Cracking along Pavement @ Begin App.

• Cracking + damage @ Pavement end App Slab

• Crack 33' along Yellow

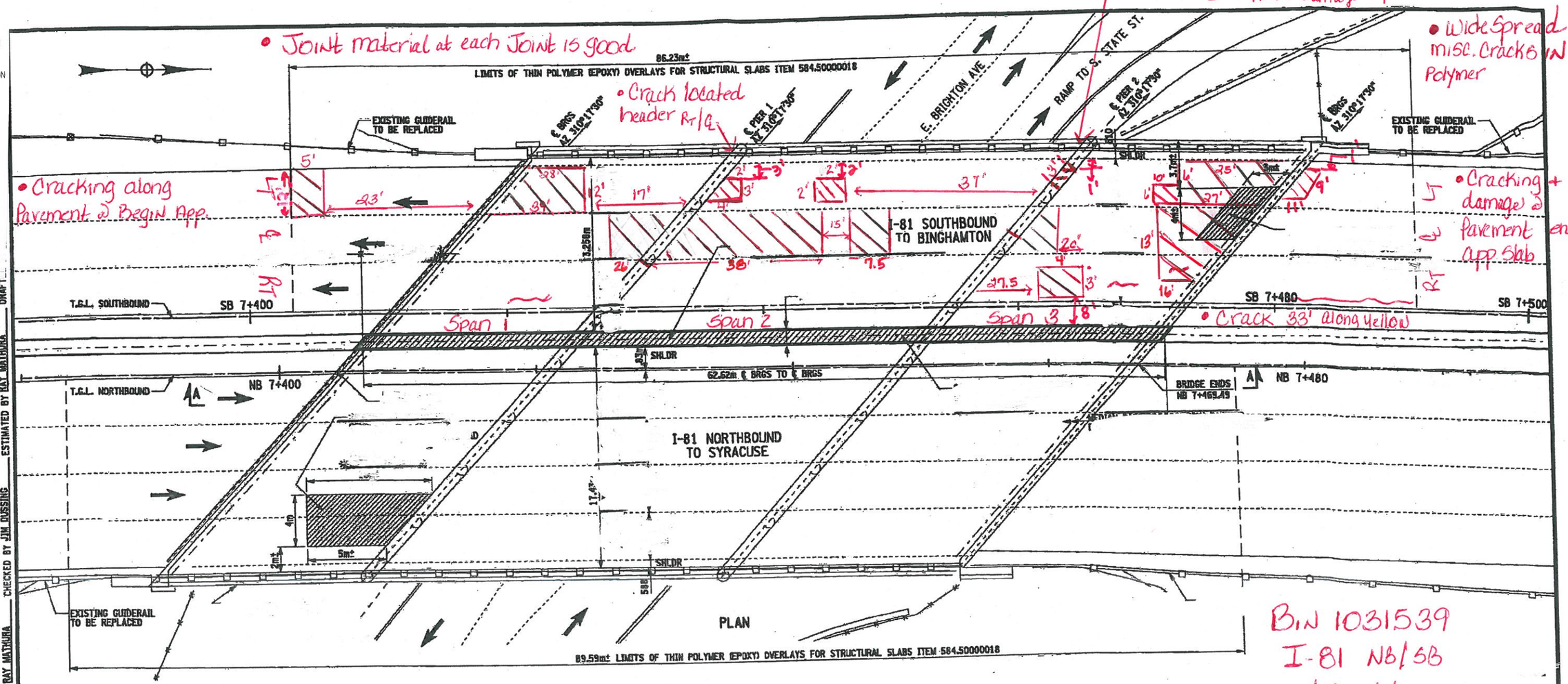

NOTE - FASCIA EXHIBITS MAP CRACKING AND LONGITUDINAL CRACKS. NUMEROUS SMALL SPALLS ON TOP EDGE.

BIN 1031539
I-81 NB/SB
O/ Brighton Ave

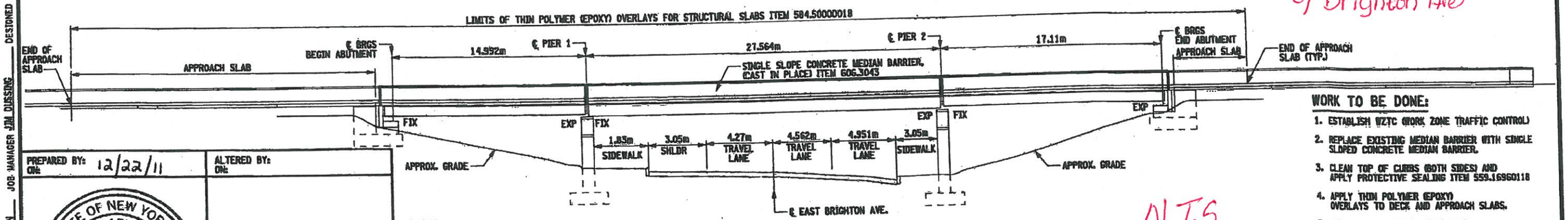

NTS

LEGEND:
REMOVAL OF STRUCTURAL CONCRETE, ITEM 580.01

ELEVATION A-A

WORK TO BE DONE:

1. ESTABLISH WZTC (WORK ZONE TRAFFIC CONTROL)
2. REPLACE EXISTING MEDIAN BARRIER WITH SINGLE SLOPED CONCRETE MEDIAN BARRIER.
3. CLEAN TOP OF CURBS (BOTH SIDES) AND APPLY PROTECTIVE SEALING ITEM 559.16960118
4. APPLY THIN POLYMER (EPOXY) OVERLAYS TO DECK AND APPROACH SLABS.
5. UNDERSIDE OF DECK PATCH WORK.
6. REPAIR CONNECTION PLATE.

IT IS A VIOLATION OF LAW FOR ANY PERSON, UNLESS THEY AR PROFESSIONAL ENGINEER, ARCHITECT, LANDSCAPE ARCHITECT, O IF AN ITEM BEARING THE STAMP OF A LICENSED PROFESSIONAL LANDSCAPE ARCHITECT, OR LAND SURVEYOR SHALL STAMP THE FOLLOWED BY THEIR SIGNATURE, THE DATE OF SUCH ALTERATIO

DESIGN SUPERVISOR JOHN SEXTON — JOB MANAGER JIM DUSSING — DESIGNED BY RAY MATHURA — CHECKED BY JIM DUSSING — ESTIMATED BY RAY MATHURA — DRAFT

FILE NAME = 350151_01_1031539_PLN_ELEV.DGN
DATE/TIME = 22-DEC-2011 09:58
USER = Hooker

PREPARED BY: ON: 12/22/11

ALTERED BY: ON:

STATE OF NEW YORK · JAMES MICHAEL DUSSING · LICENSED PROFESSIONAL ENGINEER · NO. 077475

AS BUILT REVISIONS
DESCRIPTION OF WORK:

SIGNATURE DATE

I-81 NY173 TO DOWNTOWN VIADUCT	PIN 3501.51	BRIDGES 1031539	CULVERTS	ALL DIMENSIONS IN mm UNLESS OTHERWISE NOTED	CONTRACT NUMBER D261956
NEW CONCRETE MEDIAN BARRIER	PS&E DATE			PLAN AND ELEVATION	DRAWING NO. ST4-01
I-81 OVER EAST BRIGHTON AVENUE					SHEET NO. 237
CITY OF SYRACUSE					
COUNTY: ONONDAGA					

DOCUMENT NAME: 350151_01_1031539_PLN_ELEV.DGN

NEW YORK STATE DEPARTMENT OF TRANSPORTATION REGION 03

BIN 1031539
I81 N&S OVER
BRIGHTON AVE

"UNDER DECK SKETCH"

F.I.C. 64-7

FED. RD. REG. NO.	STATE	FEDERAL AID PROJECT NO.	SHEET NO.	TOTAL SHEETS
1	NEW YORK	I-81-2(80)	238	289

INTERSTATE ROUTE 505
SYRACUSE CITY LINE TO SIZER STREET

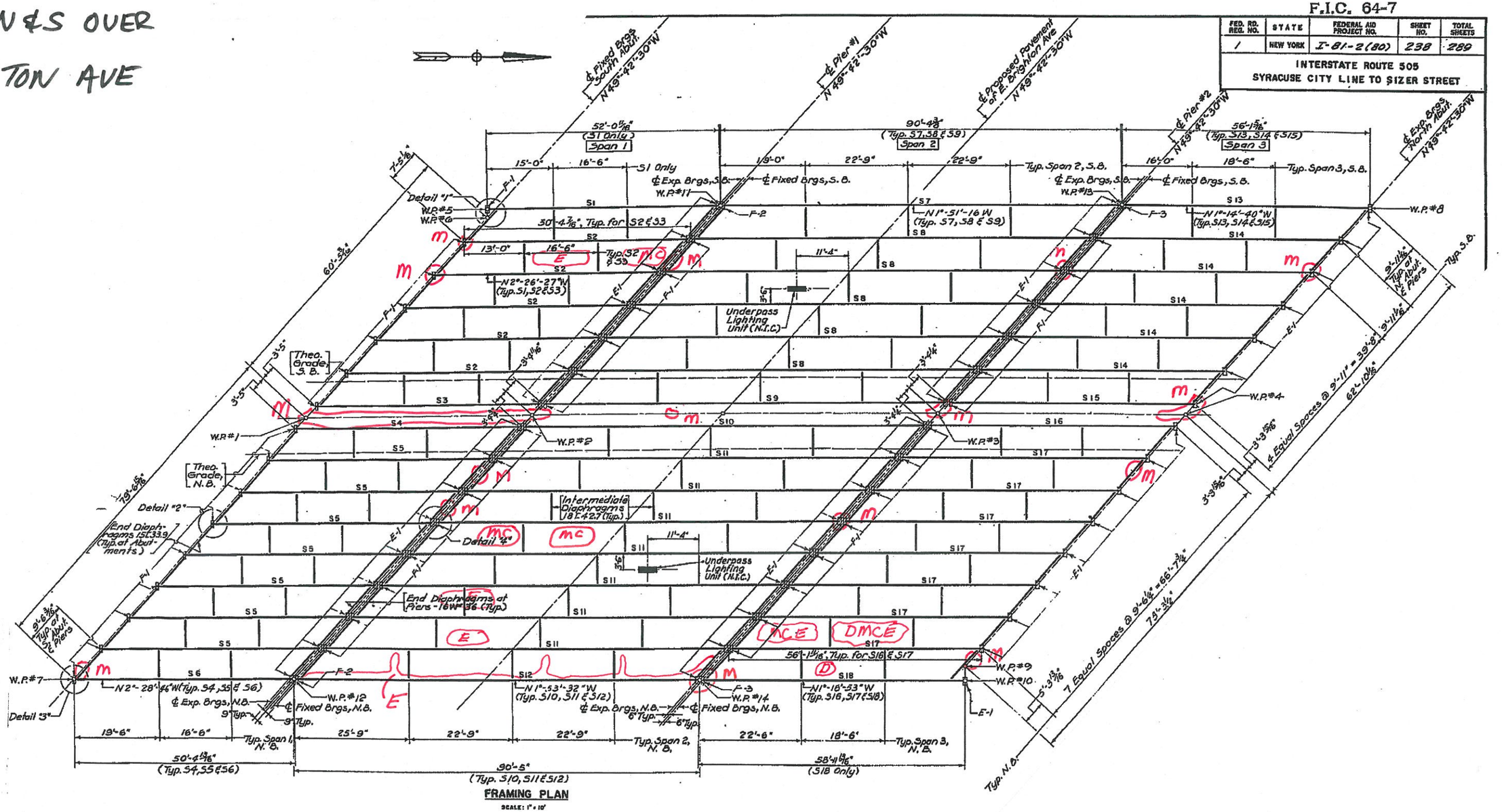

FRAMING PLAN
SCALE: 1" = 10'

D – SHALLOW DELAMINATIONS IN UNDERDECK

E – EFFLORESCENCE STAINS ON UNDERDECK

M – ACTIVE MOISTURE LEAKAGE

MC – MAP CRACKING IN UNDERDECK

BIN 1031539 I81 OVER BRIGHTON AVE

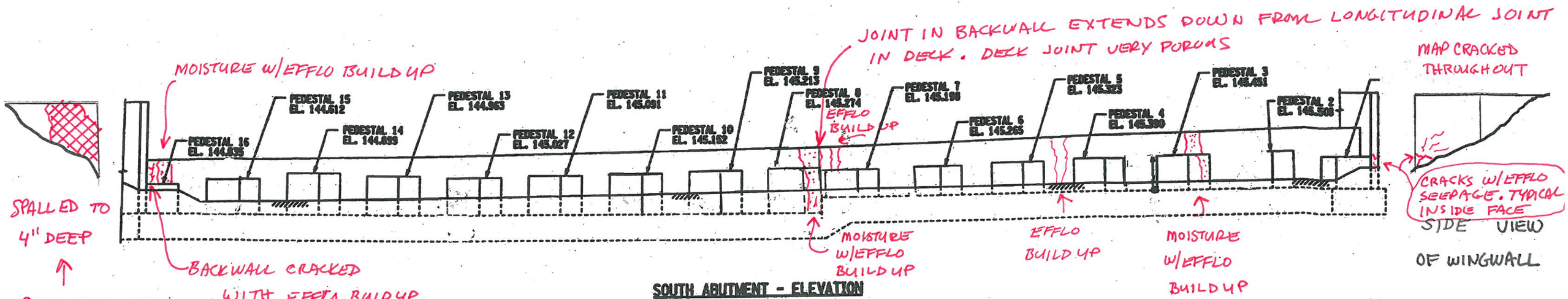

1031539 I81 OVER BRIGHTON AVE

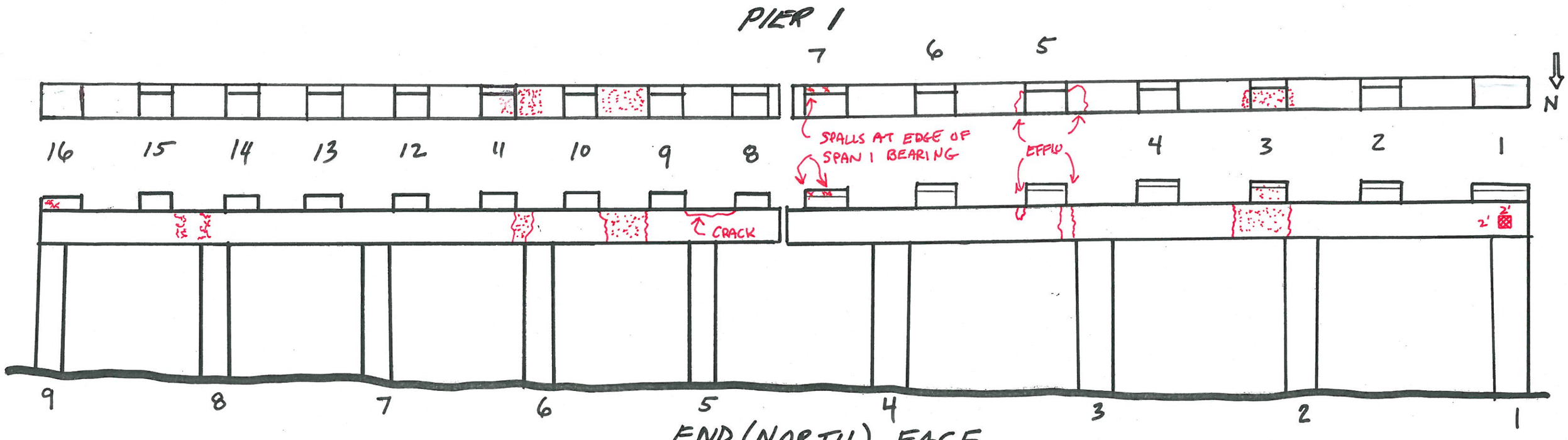

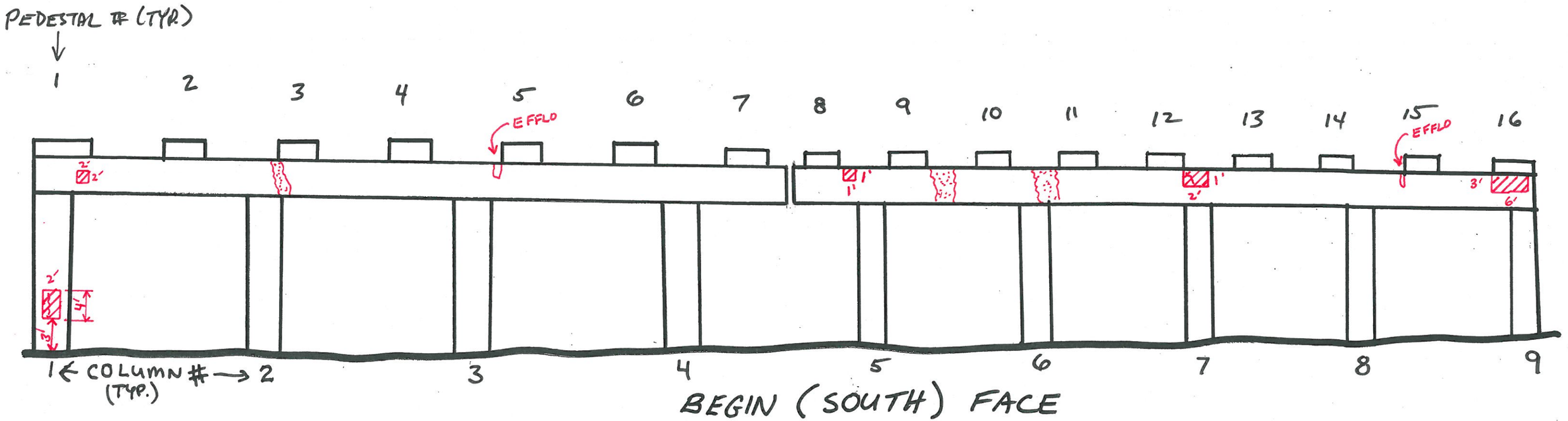

1031539 I81 OVER BRIGHTON AVE

PIER 2

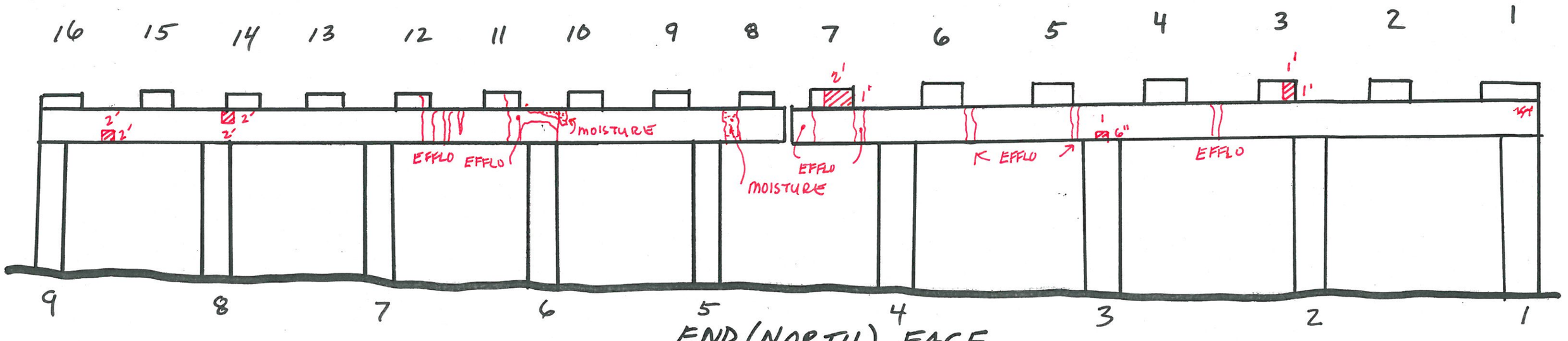

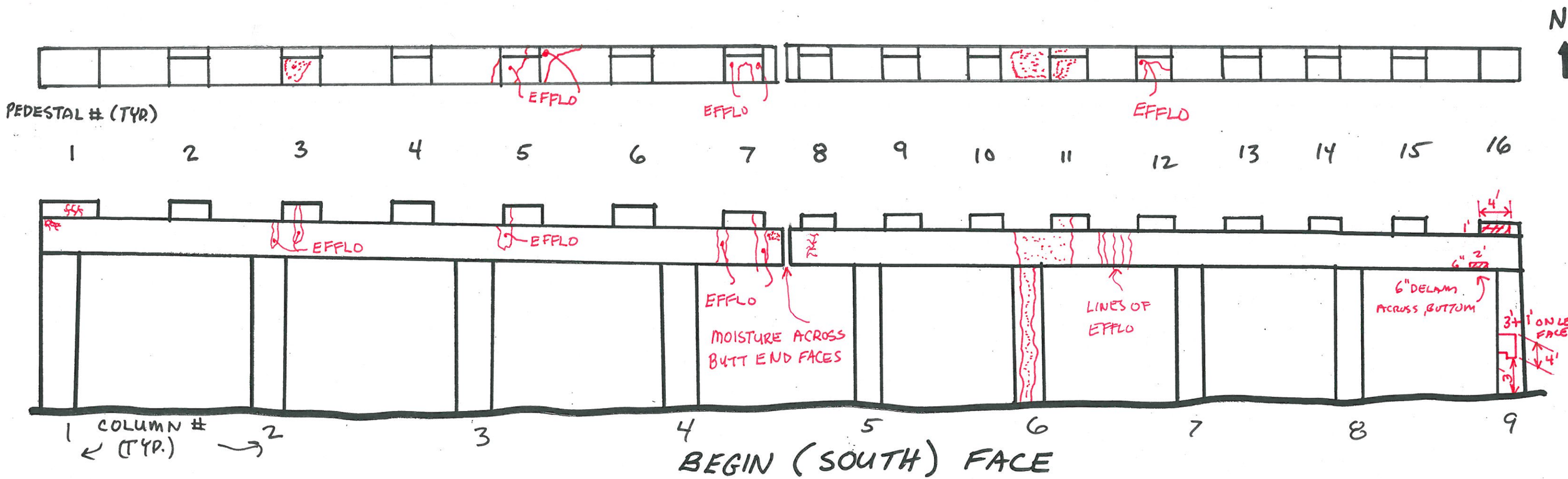

BIN 1031539 I81 OVER BRIGHTON AVE

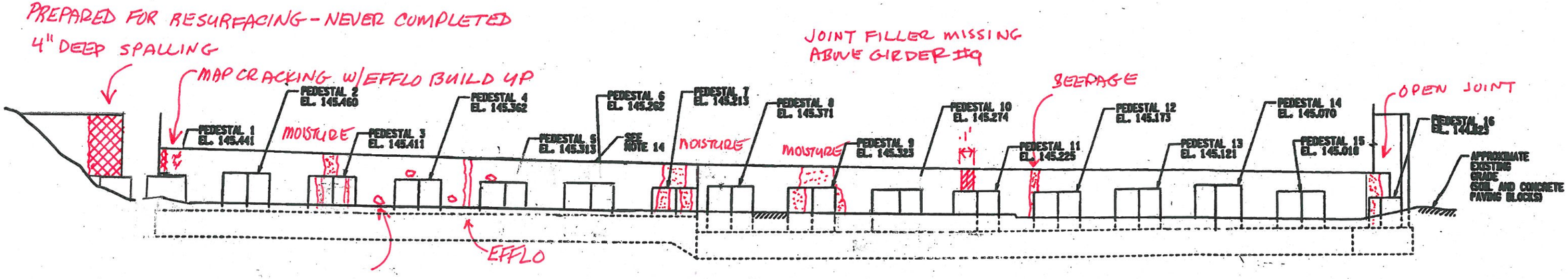

IN-DEPTH PHOTO DOCUMENTATION

C&S Engineers, Inc.
499 Col. Eileen Collins Blvd.
Syracuse, New York 13212
Phone: (315) 455-2000
Fax: (315) 455-9667
www.cscos.com

I-81 N & S over Brighton Ave - BIN 1031539



DESCRIPTION: SOUTH (BEGINNING) ABUTMENT – GENERAL CONFIGURATION – TYPICAL OF NORTH ABUTMENT – VIEWED RIGHT TO LEFT

PHOTO 1



DESCRIPTION: BEGINNING LEFT CHEEKWALL – TYPICAL OF END RIGHT – MAPCRACKING THROUGHTOUT – EFFLO SEEPAGE THROUGH SOME CRACKS

PHOTO 2

C&S Engineers, Inc.
499 Col. Eileen Collins Blvd.
Syracuse, New York 13212
Phone: (315) 455-2000
Fax: (315) 455-9667
www.cscos.com

I-81 N & S over Brighton Ave - BIN 1031539



DESCRIPTION: SOUTH ABUTMENT – PEDESTAL 3 – EFFLORESCENCE & MOISTURE BUILDUP

PHOTO 3



DESCRIPTION: SOUTH ABUTMENT – PEDESTAL 5 – TYPICAL BEARING (FIXED) AT ABUTMENT

PHOTO 4

C&S Engineers, Inc.
499 Col. Eileen Collins Blvd.
Syracuse, New York 13212
Phone: (315) 455-2000
Fax: (315) 455-9667
www.cscos.com

I-81 N & S over Brighton Ave - BIN 1031539



DESCRIPTION: SOUTH ABUTMNET – PED'S 7 & 8 – LEAKY LONGITUDINAL DECK JOINT ABOVE ALLOWS EFFLO & MOISTURE BUILDUP

PHOTO 5



DESCRIPTION: SPAN 1 – LONGITUDINAL DECK JOINT – LEAKAGE ENTIRE LENGTH OF SPAN – VIEWED FROM BEGINNING TO END

PHOTO 6

C&S Engineers, Inc.
499 Col. Eileen Collins Blvd.
Syracuse, New York 13212
Phone: (315) 455-2000
Fax: (315) 455-9667
www.cscos.com

I-81 N & S over Brighton Ave - BIN 1031539



DESCRIPTION: SOUTH ABUTMENT – RIGHT FASCIA PEDESTAL (#16) & BACKWALL & CORNER WITH WINGWALL – HEAVY SEEPAGE, CRACKING & SPALLING

PHOTO 7



DESCRIPTION: SOUTH ABUTMENT – RIGHT WINGWALL – GENERAL CONFIGURATION – TYPICAL END LEFT – HEAVY SPALLING

PHOTO 8

C&S Engineers, Inc.
499 Col. Eileen Collins Blvd.
Syracuse, New York 13212
Phone: (315) 455-2000
Fax: (315) 455-9667
www.cscos.com

I-81 N & S over Brighton Ave - BIN 1031539



DESCRIPTION: PIER 1 – GENERAL CONFIGURATION – TYPICAL OF PIER 2 – VIEWED FROM BEGINNING RIGHT

PHOTO 9



DESCRIPTION: PIER 1 – COLUMN 1 – BEGIN FACE – HOLLOWNESS & CRACKING IN COLUMN AND CAPBEAM ABOVE

PHOTO 10

C&S Engineers, Inc.
499 Col. Eileen Collins Blvd.
Syracuse, New York 13212
Phone: (315) 455-2000
Fax: (315) 455-9667
www.cscos.com

I-81 N & S over Brighton Ave - BIN 1031539



DESCRIPTION: PIER 1 – PED 2 – TYP. EXP. BEAR. FOR SPAN 1 & FIXED BEAR. FOR SPAN 2 – TYP. STEP PEDESTAL FOR INTERIOR PED'S - VIEWED FROM END RIGHT

PHOTO 11



DESCRIPTION: PIER 1- NORTH FACE – HEAVY MOISTURE ON & BELOW PED 3 – EFFLO BUILDUP BELOW PED 5

PHOTO 12

C&S Engineers, Inc.
499 Col. Eileen Collins Blvd.
Syracuse, New York 13212
Phone: (315) 455-2000
Fax: (315) 455-9667
www.cscos.com

I-81 N & S over Brighton Ave - BIN 1031539



DESCRIPTION: PIER 1 – PED 7 – CRACKS IN PED BELOW EXP. BEARING FOR SPAN 1 GIRDER – VIEWED FROM END LEFT

PHOTO 13



DESCRIPTION: PIER 1 – PED 7 – CRACKS IN PED BELOW BEAR. FOR SPAN 1 GIRDER – SECTION LOSS IN WEBS OF BOTH GIRDERS - VIEWED FROM END RIGHT

PHOTO 14

C&S Engineers, Inc.
499 Col. Eileen Collins Blvd.
Syracuse, New York 13212
Phone: (315) 455-2000
Fax: (315) 455-9667
www.cscos.com

I-81 N & S over Brighton Ave - BIN 1031539



DESCRIPTION: PIER 1 – PED 7 – SECTION LOSS IN WEB AND FLANGE OF SPAN 1 GIRDER – VIEWED FROM END RIGHT

PHOTO 15



DESCRIPTION: PIER 1 – HORIZONTAL CRACK AT TOP OF CAPBEAM BETWEEN PED'S 8 & 9 ON THE NORTH FACE (END)

PHOTO 16

C&S Engineers, Inc.
499 Col. Eileen Collins Blvd.
Syracuse, New York 13212
Phone: (315) 455-2000
Fax: (315) 455-9667
www.cscos.com

I-81 N & S over Brighton Ave - BIN 1031539



DESCRIPTION: PIER 1 – MOISTURE ON CAPBEAM AT PED'S 9-11 ON THE NORTH FACE

PHOTO 17



DESCRIPTION: PIER 1 – HOLLOWNESS IN CAPBEAM BELOW RIGHT FASCIA PEDESTAL (#16) ON THE SOUTH FACE

PHOTO 18

C&S Engineers, Inc.
499 Col. Eileen Collins Blvd.
Syracuse, New York 13212
Phone: (315) 455-2000
Fax: (315) 455-9667
www.cscos.com

I-81 N & S over Brighton Ave - BIN 1031539



DESCRIPTION: PIER 1 – RIGHT FASCIA PEDESTAL – SINGLE LEVEL PEDESTAL – NOT A STEP TYPE –TYPICAL ALL FASCIA PED'S – BOTH PIERS

PHOTO 19



DESCRIPTION: PIER 2 – SOUTH FACE - BELOW LONGITUDINAL JOINT IN DECK - BETWEEN PED'S 7-8 - HEAVY SEEPAGE ALL SIDES OF CAPBEAM

PHOTO 20

C&S Engineers, Inc.
499 Col. Eileen Collins Blvd.
Syracuse, New York 13212
Phone: (315) 455-2000
Fax: (315) 455-9667
www.cscos.com

I-81 N & S over Brighton Ave - BIN 1031539



DESCRIPTION: PIER 2 – SOUTH FACE – HEAVY SEEPAGE ALL SIDES OF CAPBEAM AND COLUMN 6 FROM PEDESTALS 10-12

PHOTO 21



DESCRIPTION: PIER 2 – SOUTH FACE – HOLLOWNESS BELOW PEDESTAL 16 IN PEDESTAL, CAPBEAM AND COLUMN 9

PHOTO 22

C&S Engineers, Inc.
499 Col. Eileen Collins Blvd.
Syracuse, New York 13212
Phone: (315) 455-2000
Fax: (315) 455-9667
www.cscos.com

I-81 N & S over Brighton Ave - BIN 1031539



DESCRIPTION: PIER 2 – SOUTH FACE – HOLLOWNESS IN COLUMN 9 – VIEWED FROM BEGIN LEFT

PHOTO 23



DESCRIPTION: PIER 2 – NORTH FACE – LEAKAGE ON CAPBEAM, ALL SIDES, BETWEEN PEDESTALS 3-5 – VIEWED FROM END RIGHT

PHOTO 24

C&S Engineers, Inc.
499 Col. Eileen Collins Blvd.
Syracuse, New York 13212
Phone: (315) 455-2000
Fax: (315) 455-9667
www.cscos.com

I-81 N & S over Brighton Ave - BIN 1031539



DESCRIPTION: PIER 2 – NORTH FACE – HOLLOWNESS IN CAPBEAM BELOW PED'S 14 & 15 AND IN COLUMN 9 – VIEWED FROM END LEFT

PHOTO 25



DESCRIPTION: PIER 2 –NORTH FACE - GIRDERS #7 – BOTTOM FLANGE LOSS IN SPAN 3 G-7 - AFTER BEGINNING BEARING – VIEWED FROM LEFT TOWARD BEGINNING

PHOTO 26

C&S Engineers, Inc.
499 Col. Eileen Collins Blvd.
Syracuse, New York 13212
Phone: (315) 455-2000
Fax: (315) 455-9667
www.cscos.com

I-81 N & S over Brighton Ave - BIN 1031539



DESCRIPTION: PIER 2 – NORTH FACE –BOTTOM FLANGE LOSS IN SPAN 3, GIRDER 7, AFTER BEGINNING BEARING – VIEWED FROM RIGHT TOWARD BEGINNING

PHOTO 27



DESCRIPTION: SPAN 3 – GIRDER 16 – FLANGE LOSS BETWEEN BEGIN BEARING & FULL LENGTH COVERPLATE - CRACK FOUND IN THINNEST SPOT– VIEWED FROM BEGIN LEFT

PHOTO 28

C&S Engineers, Inc.
499 Col. Eileen Collins Blvd.
Syracuse, New York 13212
Phone: (315) 455-2000
Fax: (315) 455-9667
www.cscos.com

I-81 N & S over Brighton Ave - BIN 1031539



DESCRIPTION: SPAN 3 – GIRDER 16 (FASCIA) – FLANGE LOSS BETWEEN BEGIN BEARING & FULL LENGTH COVERPLATE – VIEWED FROM BEGIN RIGHT

PHOTO 29



DESCRIPTION: NORTH (END) ABUTMENT – END LEFT WINGWALL – SPALLS TO 4" DEEP IN WALL AND BACKWALL

PHOTO 30

C&S Engineers, Inc.
499 Col. Eileen Collins Blvd.
Syracuse, New York 13212
Phone: (315) 455-2000
Fax: (315) 455-9667
www.cscos.com

I-81 N & S over Brighton Ave - BIN 1031539



DESCRIPTION: NORTH ABUTMENT – PEDESTAL 3 – EFFLO BUILDUP & LIGHT MOISTURE ON AND BEHIND PEDESTAL – VIEWED FROM LEFT

PHOTO 31



DESCRIPTION: NORTH ABUTMENT – PED 5 - EFFLO BUILDUP ON AND BEHIND PEDESTAL – CONCRETE DEBRIS FROM DECK HAUNCH - VIEWED FROM LEFT

PHOTO 32

C&S Engineers, Inc.
499 Col. Eileen Collins Blvd.
Syracuse, New York 13212
Phone: (315) 455-2000
Fax: (315) 455-9667
www.cscos.com

I-81 N & S over Brighton Ave - BIN 1031539



DESCRIPTION: NORTH ABUTMENT – PEDESTAL 7 – MOISTURE ON AND BEHIND PED FROM LEAKY LONGITUDINAL JOINT IN DECK – VIEWED FROM LEFT

PHOTO 33



DESCRIPTION: NORTH ABUTMENT – PEDESTAL 9 – MOISTURE ON AND BEHIND PEDESTAL FROM OPEN JOINT ABOVE PEDESTAL – VIEWED FROM LEFT

PHOTO 34

C&S Engineers, Inc.
499 Col. Eileen Collins Blvd.
Syracuse, New York 13212
Phone: (315) 455-2000
Fax: (315) 455-9667
www.cscos.com

I-81 N & S over Brighton Ave - BIN 1031539



DESCRIPTION: NORTH ABUTMENT – PEDESTAL 16 – MOISTURE ON AND BEHIND PEDESTAL FROM OPEN JOINT ABOVE PEDESTAL – VIEWED FROM LEFT

PHOTO 35



DESCRIPTION: SPAN 3 – BAY14 OF 15 – MAP CRACKING WITH EFFLORESCENCE SEEPAGE – MINOR DELAMS – VIEWED FROM BEGIN TO END

PHOTO 36

C&S Engineers, Inc.
499 Col. Eileen Collins Blvd.
Syracuse, New York 13212
Phone: (315) 455-2000
Fax: (315) 455-9667
www.cscos.com

I-81 N & S over Brighton Ave - BIN 1031539



DESCRIPTION: BEGINNING APPROACH – LEFT HALF – SOUTH BOUND LANES- VIEWED FROM BEGINNING (SOUTH) CENTER TOWARD END (NORTH)

PHOTO 37



DESCRIPTION: BEGINNING APPROACH – RIGHT HALF – NORTH BOUND LANES- VIEWED FROM BEGINNING (SOUTH) CENTER TOWARD END (NORTH)

PHOTO 38

PHOTO LOCATION MAP

1031539
I81/BRIGHTON AVE

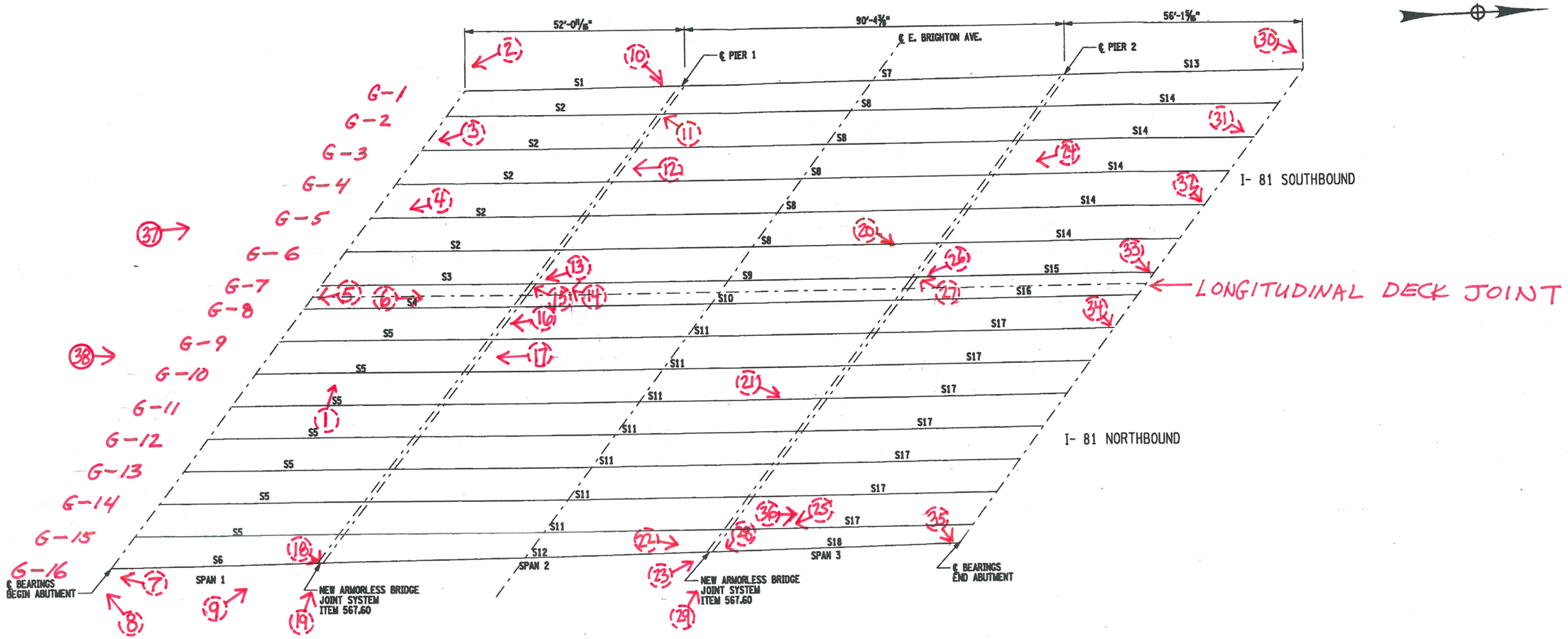

LAYOUT OF GIRDERS

→ INDICATES PHOTO WAS TAKEN BELOW THE BRIDGE DECK

→ INDICATES PHOTO WAS TAKEN ABOVE THE BRIDGE DECK

ASBESTOS DOCUMENTATION

Asbestos Sampling Survey

Location:

BIN 1031539
Interstate Route I-81 over East Brighton Avenue

Prepared for:

New York State
Department of Transportation

PIN 3804.52.101

LaBella Project No. 97132

March 2001

Table of Contents

Page

I. Project Summary 1

II. Site Description 1

III. Inspection Procedures 1

IV. Results 2

Certification 2

Figures and Table

I. Project Summary

In accordance with conditions of Term Agreement D010010, LaBella Associates, P.C. conducted an asbestos sampling survey of the Interstate Route I-81 bridge over East Brighton Avenue. Based on laboratory analyses of bulk samples collected, no materials were determined to contain asbestos.

II. Site Description

The Site is located in Onondaga County, New York. For the purpose of this report, the Site consists of the Interstate Route I-81 bridge over East Brighton Avenue. (See attached FIGURE 1 - Site Location Map).

III. Inspection Procedures

The following procedures were used to obtain the data for this Report:

A. A review of record drawings supplied by Region 3 personnel and a visual inspection of the subject structure were conducted to identify potential visible/accessible sources of asbestos-containing materials. Observations and notes were made to provide a description of the structure, and an estimate of the approximate amount, length, or area of ACM present.

B. Physical or operational constraints, which might affect the removal of the ACM, were identified and reported.

C. Bulk samples of suspected ACM were collected during the site inspection of the subject structure. Samples were taken from each homogeneous area that may contain ACM.

D. Samples were submitted for analysis. Preliminary PLM analyses of NOB materials were performed by LaBella Laboratories, a NYSDOH approved laboratory, to determine the presence and percentage of asbestos in each sample. TEM analyses of NOB materials, if necessary, were performed by AMA Analytical, Inc.

E. Lab results were used to determine the approximate location, type, and amount of the verified ACM.

F. A drawing of the structure at the Site was created, in order to show sample locations and the approximate locations and amounts of confirmed ACM observed in accessible locations.

Only accessible areas were inspected. Inaccessible areas, such as areas within the bridge or the approaches to the bridge were not included in this inspection. No investigation was conducted by LaBella Associates to determine the presence of underground utilities on or in the immediate vicinity of the Site. Actual sample locations are shown in the attached FIGURE 2. Results of bulk sample analyses are tabulated in the attached TABLE.

IV. Results

BIN 1031539 Interstate Route I-81 over East Brighton Avenue

Based on laboratory analyses of bulk samples collected, no materials were determined to contain asbestos.

Certification

LaBella Associates, P.C. certifies the accuracy of this report, to the best of our knowledge, based on the information collected as described in the Inspection Procedures Section of this investigation.

Figures & Table

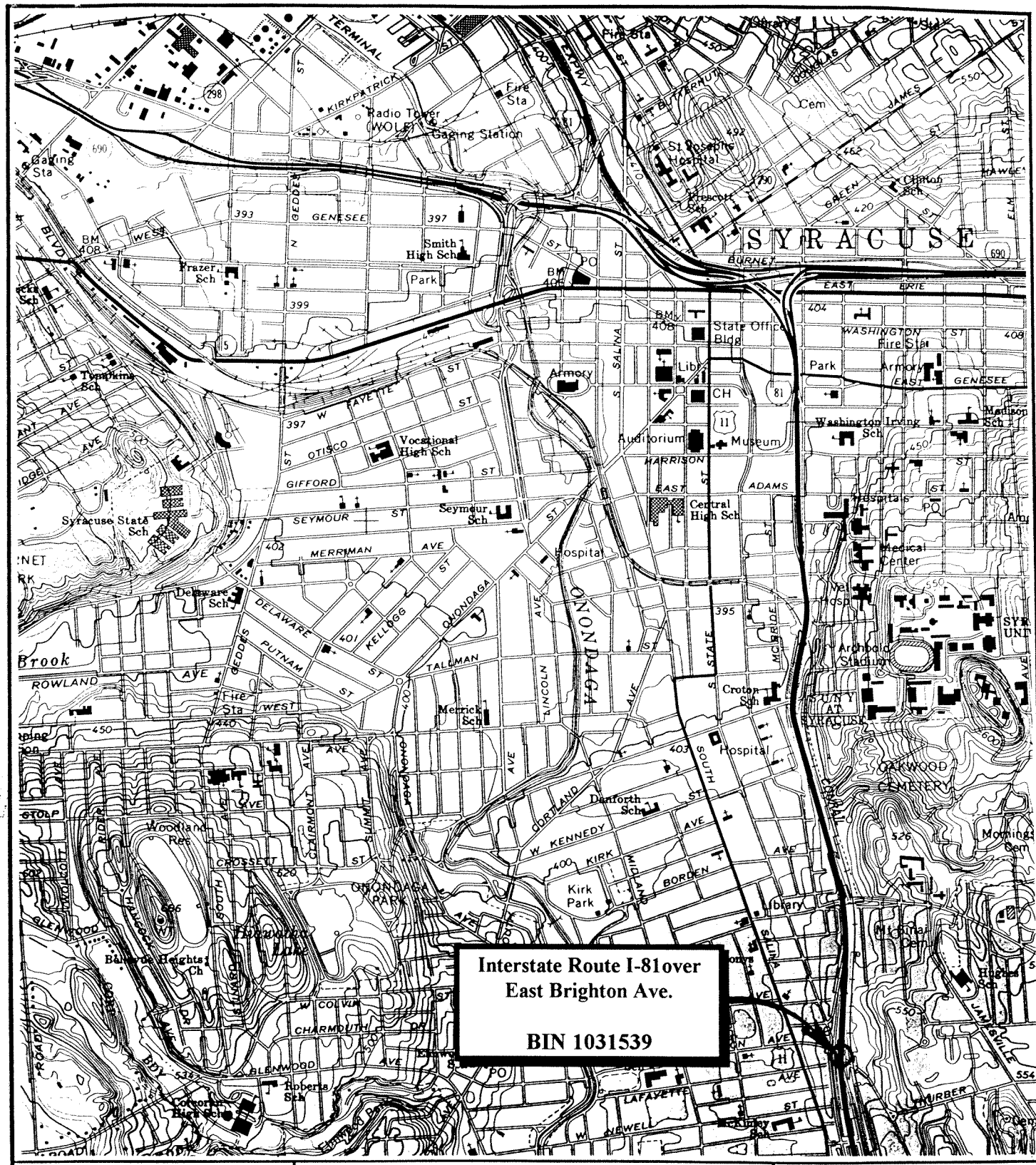

FIGURE 1
Site Location Map

Interstate Route I-81
over East Brighton Ave.
Onondaga County, New York

SCALE: 1" = 2000'

LABELLA

PROJECT NO. 97132

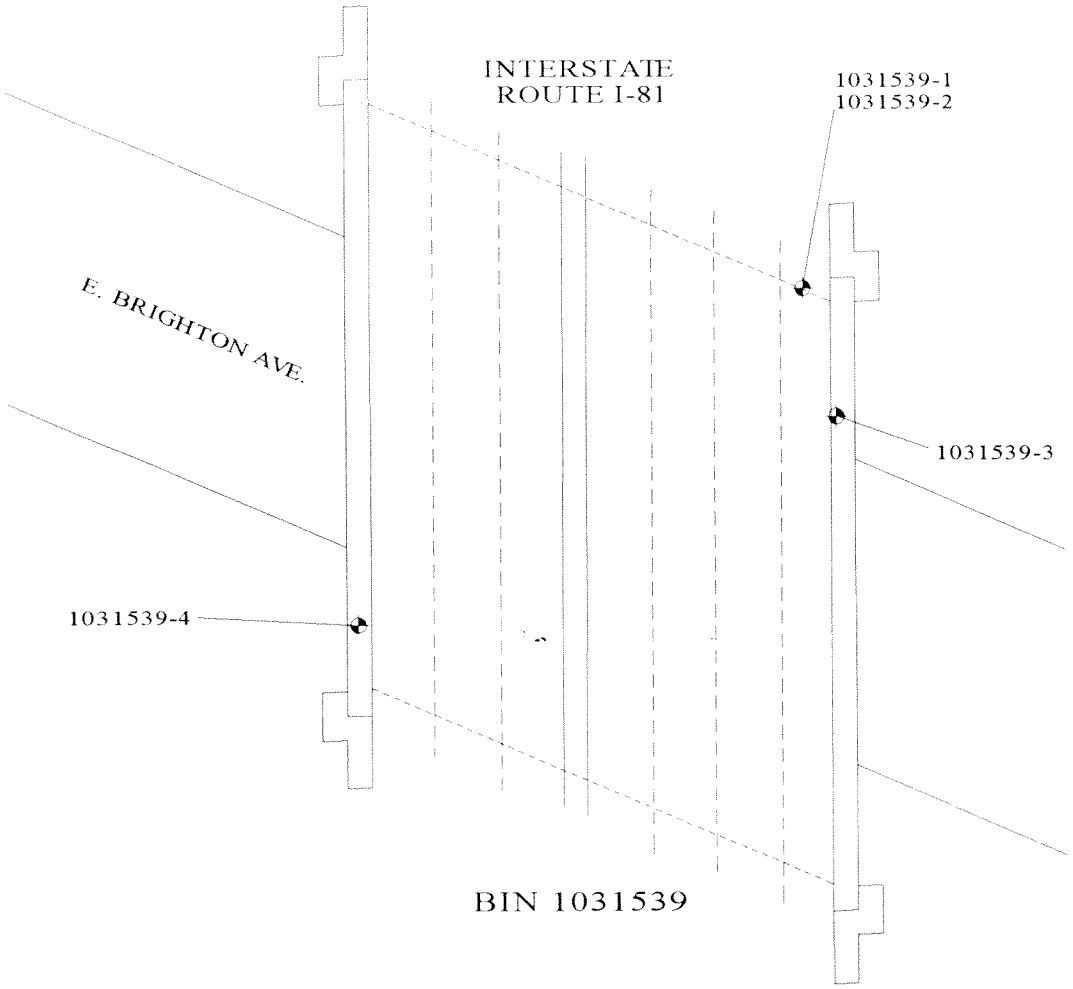

LEGEND

1031539-1 SAMPLE LOCATION

NOTE: NO ASBESTOS-CONTAINING MATERIALS IDENTIFED.

NORTH

PROJECT TITLE: ASBESTOS SAMPLING SURVEY 11 BRIDGES ONONDAGA COUNTY, NY	PROJECT NO. 97132 PIN 3804.52.101
FIGURE TITLE: FIGURE 2 - BIN 1031539 INTERSTATE RTE I-81 OVER E. BRIGHTON AVE. SAMPLE LOCATIONS AND CONFIRMED ACM	DRAWN BY: TJK DATE: MARCH, 2001

Bulk Sample Results Table

Asbestos Sampling Survey
BIN 1031539
Interstate Route I-81 over East Brighton Avenue
Onondaga County, New York
LaBella Project # 97132
PIN 3804.52.101

Sample #	Sample Location	Type of Material	Results % Asbestos	Amount of Material	Specification Item No.
1031539-1	North End of Bridge Beneath Bearing	Bearing Pad	None Detected	N/A	N/A
1031539-2	North End of Bridge on Back Wall	Gray Masonry Coating	None Detected	N/A	N/A
1031539-3	East Parapet in Expansion Joint	Black Joint Filler	None Detected	N/A	N/A
1031539-4	South End of Bridge on I-Beam	Green Paint	None Detected	N/A	N/A

ASBESTOS DOCUMENTATION FROM WATTS ARCHITECTURE & ENGINEERING, INC.

(WILL REPLACE BIN FOLDER ASBESTOS REPORT UPON COMPLETION)

NEW YORK STATE
DEPARTMENT OF TRANSPORTATION
D031085 P.I.N 3501.60

LEVEL 1 LOAD RATING
B.I.N. 1031539
I-81 over East Brighton Ave

LOAD RATING SUMMARY TABLE (LOAD FACTOR)					
CONTROLLING MEMBER	**CONTROLLING PARAMETER**	**LIVE LOAD**	**LIVE LOAD TYPE**	**INVENTORY RATING**	**OPERATING RATING**
(S3 SB /G7) INTERIOR GIRDER	SERVICE	HS20-44	Axle Load	HS 25.12 (45.21 TONS)	HS 41.94 (75.51 TONS)
(S3 SB /G7) INTERIOR GIRDER	SERVICE	ALTERNATE MILITARY LOADING	Axle Load	1.462 (35.09 TONS)	2.442 (58.60 TONS)

DOES NOT INCLUDE FUTURE WEARING COURSE

ANALYSIS METHOD:LOAD FACTOR

RECOMMENDED POSTING AS-IS CONDITION: _____ Tons __X__ None

CALCULATED BY:

STATE OF NEW YORK CHARLES P. BROOKS III 089275 LICENSED PROFESSIONAL ENGINEER

DATE: 4/30/14

QUALITY ASSURANCE BY:

STATE OF NEW YORK PAUL F. BYRNE 055928 LICENSED PROFESSIONAL ENGINEER

DATE: 5/16/14

C&S COMPANIES®

499 Col. Eileen Collins Blvd.
Syracuse, NY 13212
phone 315-455-2000
fax 315-455-9667
www.cscos.com

ENGINEERS
DESIGN BUILD
TECHNICAL RESOURCES
OPERATIONS

C&S Engineers, Inc.
Syracuse Hancock International Airport
Syracuse, NY 13212
phone 315-455-2000
fax 315-455-9667
www.cscos.com

TECHNICAL MEMORANDUM

TO: FILE (190.514.001)

FROM: JESSICA S. BAUER, P.E.
NYSPE 084915

DATE: MARCH 25, 2014

C&S PROJECT NO.: 190.514.001

RE: SEISMIC ASSESSMENT SUMMARY
NEW YORK STATE DEPARTMENT OF TRANSPORTATION
D031085; PIN 3501.60; I-81

BIN: 1031539 Seismic Assessment

This memorandum summarizes the seismic assessment conducted for BIN 1031539 as part of the Interstate 81 Project in Syracuse, NY. The purpose of the assessment is to determine if seismic retrofits are warranted at the superstructure to substructure connection, and if further seismic evaluation of the structure is required. This memorandum will give the assessment results, retrofits required and recommendations for further seismic evaluation of the structure.

ASSESSMENT PROCEDURE

The seismic assessment was performed in accordance with the FHWA Seismic Retrofitting Manual for Highway Structures: Part 1 - Bridges, January 2006. As per the referenced manual, seismic assessment was performed for both lower level and upper level earthquake ground motion. The lower level earthquake ground motion has a reasonable likelihood of occurrence within the life of the bridge (50% probability of exceedance within a 75 year bridge life). The upper level earthquake ground motion has a finite likelihood of occurrence within the life of the bridge (7% probability of exceedance within a 75 year bridge life).

Values for the spectral acceleration for the Syracuse area used in the assessment are as follows:

- Lower Level Earthquake Ground Motion for a Short Period (0.2 seconds): $S_S = 0.0251$
- Lower Level Earthquake Ground Motion for a Long Period (1.0 seconds): $S_1 = 0.0076$
- Upper Level Earthquake Ground Motion for a Short Period (0.2 seconds): $S_S = 0.139$
- Upper Level Earthquake Ground Motion for a Long Period (1.0 seconds): $S_1 = 0.047$

These values are considered constant and are the same for all seismic assessments of bridges in the Syracuse area.

The Site Class is based on the soil conditions at the bridge location. It was determined that this parameter has little effect on the results of the seismic assessment because the spectral

You created this PDF from an application that is not licensed to print to novaPDF printer (http://www.novapdf.com)

acceleration values for the Syracuse area are small. Based on this, a site class of D was used for all seismic assessments of bridges in the Syracuse area.

Bridge parameters used in the seismic assessment were retrieved from the record drawings and WinBolts data.

The seismic assessment takes into account the anticipated service life, importance, and the seismic exposure of the bridge to determine a seismic retrofit category (SRC). The SRC is then used to determine seismic evaluation methods and retrofit measures. There are four SRCs, A through D. Seismic retrofit category A is the lowest category; bridges in this category do not require retrofits or further seismic evaluation. Seismic retrofit category D is the highest category; bridges in this category requiring the most rigorous seismic evaluations and retrofits.

ASSESSMENT RESULTS

The SRC for the bridge is "**C**" for lower level earthquake ground motion and "**B**" for upper level earthquake ground motion.

RETROFITS REQUIRED

Bearing replacements are not required at the abutments or piers. Seat width improvements are required at the abutments. Additional retrofits may be required if further seismic evaluation is needed.

RECOMMENDATIONS FOR FURTHER SEISMIC EVALUATION

For the lower level earthquake ground motion, it is recommended that capacity/demand ratios for bridge components are calculated as per Section 5.4 of the referenced manual. For the upper level earthquake ground motion, it is recommended that the capacities of the bearings are checked as per Section 5.2 of the referenced manual.

Retrofit cost estimates will be provided after any further required seismic evaluations are completed.

You created this PDF from an application that is not licensed to print to novaPDF printer (http://www.novapdf.com)

ENGINEERS
DESIGN BUILD
TECHNICAL RESOURCES
OPERATIONS

C&S Companies

C&S Engineers, Inc.
Syracuse Hancock International Airport
Syracuse, NY 13212
phone 315-455-2000
fax 315-455-9667
www.cscos.com

TECHNICAL MEMORANDUM

TO: **FILE (190.514.001)**

FROM: **PAUL BYRNE, P.E.**
NYSPE 055928

DATE: **JUNE 4, 2014**

C&S PROJECT NO.: 190.514.001

RE: **NEW YORK STATE DEPARTMENT OF TRANSPORTATION**
D031085; PIN 3501.60; I-81 Opportunities, BIN 1031539 Fatigue Evaluation

---

This memorandum documents a fatigue evaluation conducted for the existing Interstate 81 Viaduct Project. Existing structures with AASHTO Category D, E, and E' fatigue-prone details require 100% hands-on inspection unless proven to be exempt. The purpose of the evaluation is to assess the remaining life of fatigue-prone components.

EVALUATION PROCEDURES

The fatigue evaluation was performed in accordance with the AASHTO Guide Specification for Fatigue Evaluations of Existing Steel Bridges, 1990. Fatigue-prone welds identified in the biennial inspection reports were located on record drawings and confirmed visually in the field. Additional information concerning fatigue-prone welds located in BIN folders was also obtained and reviewed prior to inspection.

EVALUATION RESULTS

The results of the fatigue evaluation of the existing bridge are shown below. The remaining safe fatigue life of all of the North Bound (NB) fatigue components and the South Bound (SB) fatigue components at Span 2 Interior (Girder S8) have been **exhausted**.

Fatigue Detail Location	Remaining Safe Fatigue Life (Years)	Remaining Mean Fatigue Life (Years)
Span 1 NB, Exterior Girder S4, End of Bottom Flange Cover Plate	-15.68	97.50
Span 1 NB, Interior Girders S5, End of Bottom Flange Cover Plate	-13.61	107.70
Span 2 NB, Exterior Girder S10, End of Bottom Flange Cover Plate	-20.52	73.67
Span 2 NB, Interior Girders, S11, End of Bottom Flange Cover Plate	-18.93	81.49
Span 3 NB, Exterior Girders S16, End of Bottom Flange Cover Plate	-16.04	95.72

Fatigue Detail Location	Remaining Safe Fatigue Life (Years)	Remaining Mean Fatigue Life (Years)
Span 3 NB, Interior Girders S17, End of Bottom Flange Cover Plate	-13.93	106.09
Span 1 SB, Exterior Girder S3, End of Bottom Flange Cover Plate	13.24	239.78
Span 1 SB, Interior Girders S2, End of Bottom Flange Cover Plate	0.41	176.66
Span 2 SB, Exterior Girder S9, End of Bottom Flange Cover Plate	8.81	218.03
Span 2 SB, Interior Girders S8, End of Bottom Flange Cover Plate	-4.16	154.18
Span 3 SB, Exterior Girder S15, End of Bottom Flange Cover Plate	4.93	198.90
Span 3 SB, Interior Girders S14, End of Bottom Flange Cover Plate	5.57	202.04

E. Recommendations:

The purpose of this deck evaluation is to document and determine existing conditions of the deck. It will be used as a tool for developing the scope of work and cost estimates for the development and comparison of alternatives for the overall project.

The total damaged area is approximately 12% of the total deck area. Due to the age, condition and chloride-ion content of the bridge deck concrete, the bridge deck should be rehabilitated or replaced to meet current design standards and to mitigate excessive future maintenance costs.

Option 1 – Scarify and Bridge Deck Overlay
The maximum service life this option would provide is 25 years. The design life of this project is 30 years (ETC + 30). This option does not meet the project objective of obtaining 30+ years of service life.

Option 2 – Bridge Deck Rehabilitation with 100% Deep Removal
This option will involve partial depth reconstruction by exposing the top mat of rebar over the entire bridge deck to remove the chloride contaminated concrete (100% deep removal). The existing bridge deck thickness is 8” with 2” concrete cover over the top mat of reinforcing. The proposed partial depth reconstruction will include the addition of 1 ½” of concrete to provide the standard 9 ½” bridge deck thickness. The existing top mat of reinforcing bars will be removed and replaced to accommodate the standard 3” of concrete cover. The existing non-conforming 2-rail bridge railing will be removed and replaced with single-slope concrete barrier. The existing armorless bridge joints will be replaced with new armorless bridge joints. The Level 1 Load Rating for the final condition was found to be acceptable. This option would provide a service life of 35 years to the bridge deck. The construction cost of this option is $ 2.00 million.

Option 3 – Bridge Deck Replacement with Cast-In-Place Concrete

This option would involve the complete removal of the existing bridge deck, 2-rail bridge railing and curbs, and armorless bridge deck joints. The bridge deck would be replaced with a new concrete deck, new single-slope concrete barrier and new armorless bridge joints. The new bridge deck would be 9 ½" standard thickness as compared to the 8" existing thickness. The Level 1 Load Rating for the final condition was found to be acceptable. This option would provide a service life of 40 years to the bridge deck. The construction cost of this option is $ 2.43 million.

Option 4 – Bridge Deck Replacement with Pre-cast Concrete Deck Panels

This option will have the highest construction cost of all the options; however, traffic control costs may be lower due to the reduced construction time. Comparison of accelerated construction versus conventional construction is beyond the scope of work for this project at this time.

IN-DEPTH INSPECTION REPORT

D031085 P.I.N. 3501.60

B.I.N. 1031610

TEAM LEADER	Andrew J. Fuller, P.E.	59848
		NYSPE LICENSE #

ASSISTANT TEAM LEADER	Jeffrey M. Reina, P.E.
ASSISTANT TEAM LEADER	Logan Bessel
ASSISTANT TEAM LEADER	Jerome Getter

FEATURE CARRIED	Hiawatha Boulevard
FEATURE CROSSED	I - 81

DATE FIELD WORK BEGAN	December 10, 2013
DATE FIELD WORK COMPLETED	December 11, 2013

TABLE OF CONTENTS

- TP 349 & 350
- IN-DEPTH CONDITION DOCUMENTATION
- IN-DEPTH PHOTO DOCUMENTATION
- ASBESTOS REPORT

TP 349 & TP 350

BRIDGE ELEMENT RATINGS

Inspection Date: 9/5/2012 RC: 33 BIN: 1031610

Bridge Ratings

Carried: HIAWATHA BLVD Crossed: 81I 81I33032163 CheckValue: 1,808,665,238

Inspection Agency: 10 - NYSDOT Type of Inspection: 1 - BIENNIAL
GTMS: B02 -- Unpainted Steel Continuous - Stringer/Multi-Beam or Girder
POSTINGS: See Gen Rec Page 1 for Postings at time of inspection.
Further Investigation Needed: No
State Highway Number: 000000 Milepoint: 0.05 AADT/Yr: 22697 / 2002
Orientation: 2 - Northeast Political Unit: 2055 - City of SYRACUSE Year Built: 1987
Total Spans: 3 Ramp Bridge Attached To Span: NA BIN: NA
General Recommendation: 5 Computed Condition Rating: 4.958

Abutment Ratings:	Beg Abut	End Abut
Joint with Deck	4	4
Bearings, Bolts, Pads	4	5
Seats and Pedestals	4	5
Backwall	5	5
Stem (Breastwall)	6	5
Erosion or Scour	6	6
Footings	9	9
Piles	9	8
Recommendation	5	5

Wingwall Ratings:	Beg Abut	End Abut
Walls	6	6
Footings	9	9
Erosion or Scour	6	6
Piles	9	8

Channel Ratings:	Channel
Stream Alignment	8
Erosion and Scour	8
Waterway Opening	8
Bank Protection	8

Approach Ratings:	Approaches
Drainage	3
Embankment	6
Settlement	4
Erosion	5
Pavement	3
Guide Railing	5

Number of Flags Issued:

RED: 0 Yellow: 0 Safety: 1

Vulnerability Reviews Recommended: 1=Yes, 2=No, 3=NA, X=NotActive

Hydraulic: 3	Overload: X	Steel: 2
Collision: 2	Concrete: X	Seismic: X

Inspector's Signature: CheckValue: 1,808,665,238 Date: 9/5/2012

David Hann,PE () (Inspector ID:3000055)

Signed copy of this inspection report is available in the appropriate NYSDOT Regional Office

Reviewed By: Date: 10/31/2012

James R. Manning,PE () (QC ID:3000023)

Signed copy of this inspection report is available in the appropriate NYSDOT Regional Office

Inspection Date: 9/5/2012 RC: 33 BIN: 1031610

Span Ratings

Carried: HIAWATHA BLVD Crossed: 81I 81I33032163 CheckValue: 1,808,665,238

Deck Element Ratings:	001	002	003
Wearing Surface	3	3	3
Curbs	6	6	6
Sidewalks, Fascias	5	5	5
Railings, Parapets	5	5	5
Scuppers	4	1	4
Gratings	8	8	8
Median	4	4	4
Mono Deck Surface	6	3	3

Superstructure Ratings:	001	002	003
Structural Deck	6	6	6
Primary Members	6	6	6
Secondary Members	6	6	6
Paint	4	4	4
Joints	8	8	8
Recommendation	6	6	6

Pier Ratings:	001	002	003
Bearings, Bolts, Pads	6	5	8
Pedestals	5	4	8
Top of Cap or Beam	6	4	8
Stem Solid Pier	8	8	8
Cap Beam	6	4	8
Pier Columns	6	4	8
Footings	7	9	8
Erosion or Scour	4	6	8
Piles	9	9	8
Recommendation	6	4	8

Utility Ratings:	001	002	003
Lighting	8	8	8
Sign Structure	6	6	6
Utilities and Support	8	8	8

Field Notes:

Field Date	Arrival	Departure	Temp (C)	Temp (F)	Weather Conditions
9/4/2012	8:00:00 AM	2:30:00 PM		75	Mostly cloudy
9/5/2012	7:30:00 AM	10:00:00 AM		70	Overcast

IN-DEPTH CONDITION DOCUMENTATION

IN DEPTH INSPECTION REPORT

BIN 1031610

Visual Inspection

Miscellaneous concrete repairs were made to the abutments and piers in 2004 under contract D259742.

Cracks, spalls, and other field observations are shown on the plans. Below is a brief summary of conditions for each feature.

Superstructure

Deck – See Bridge Deck Evaluation Report

Steel – See Structural Steel Inspection Summary

Bearings – Bearing elements typically have minor rust scale.

Substructure

South Abutment – The South Abutment contained cracks, spalls, and delaminated concrete. The abutment stem contained minor isolated areas of delaminated concrete and cracking. The pedestals and back wall concrete did not appear to be delaminated however; the back wall contained significant rust staining from deteriorated stay-in-place deck forms. The steel stay-in-place deck forms exhibited significant deterioration and in some cases 100% section loss against the back wall.

Pier 1 – The north and south faces of the concrete cap beam and the columns contained minor isolated areas of delaminated concrete and cracking. Pedestal 8 exhibits a small, isolated spall.

Pier 2 – The North and South faces of the concrete cap beam and the columns contained areas of delaminated concrete and cracking. Pedestals 2, 3, 4, and 8 contain delaminated concrete.

North Abutment – The abutment stem contained large, wide-spread areas of delaminated concrete and map cracking throughout the wall. The pedestal and

back wall concrete does not appear to be delaminated. The steel deck pan exhibited rust against the back wall.

STRUCTURAL STEEL INSPECTION SUMMARY

BIN 1031610

Special Emphasis Inspection Required

Non-Redundant/Fracture Critical Members – No

Pin and Hangers – No

Fatigue-Prone Welds – No

Non-Categorized Fatigue-Prone Details – No

Other (Specified in Text) – No

Special Emphasis Details

No Special emphasis details.

Overall Steel Condition

The steel showed no sign of major deterioration. There were no isolated pockets of major section loss and no areas of concern were observed. There was a uniform patina on the entire steel structure, indicating the weathering seal was performing as intended.

Paint

The bridge contained weathering steel, there was no paint.

Section Loss

Due to the age of the steel a blanket 5% section loss should be used in load rating.

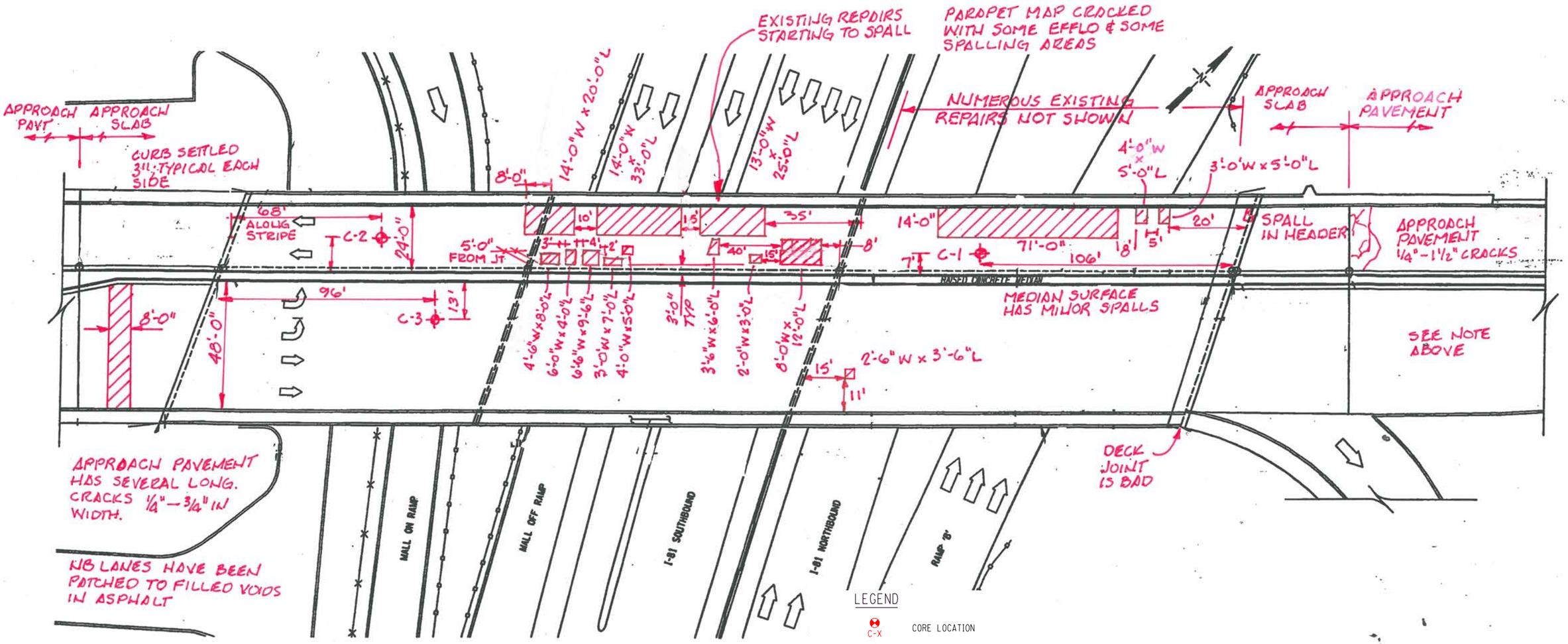

LEGEND

- C-X — CORE LOCATION
- XX — PHOTO LOCATION
- DELAMINATION
- SPALLING
- CRACK
- MAP CRACKING
- MOISTURE

BIN 1031610
HIAWATHA BLVD. OVER I-81

FED ROAD REG. NO.	STATE	CONTRACT NO.	SHEET NO.	TOTAL SHEETS
1	N.Y.	D259742	589	788

INTERSTATE ROUTE 505: OSWEGO BLVD. FIC - 56 - 11
BRIDGE REHABILITATION PROJECT (ELEMENT SPECIFIC)
VARIOUS BRIDGES ON INTERSTATES 81 & 690
CITY OF SYRACUSE
ONONDAGA COUNTY
P.I.N. 3804.66 B.I.N. 1031610

TABLE - ITEM 582.05 M	
ELEMENT	QUANTITY (CM)
PEDESTAL	0.04
STEM	0.24

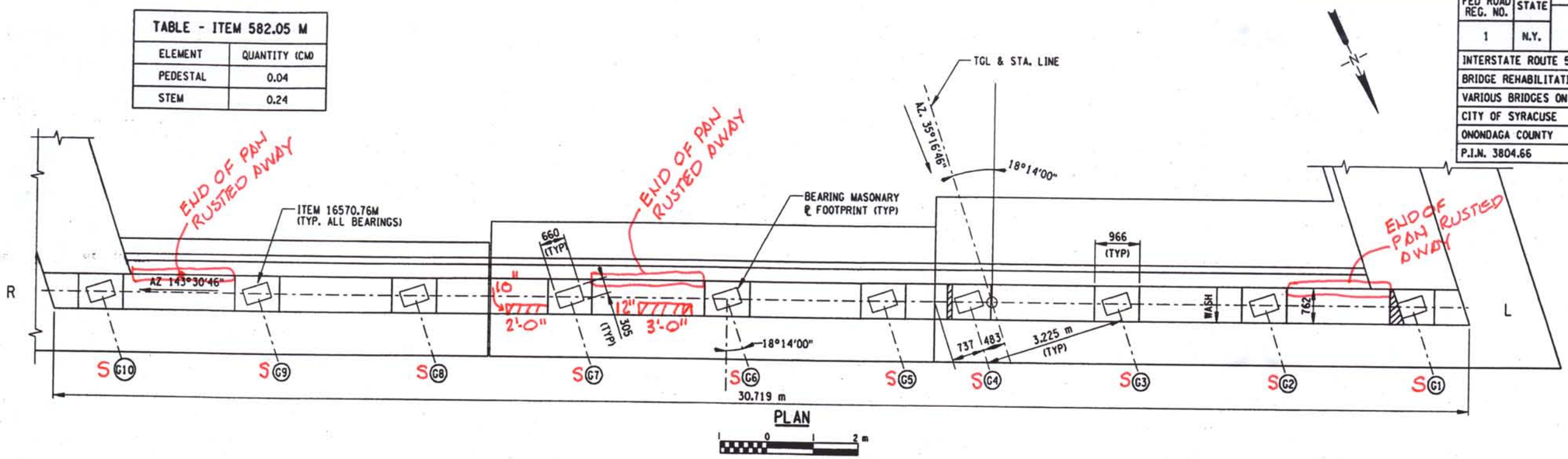

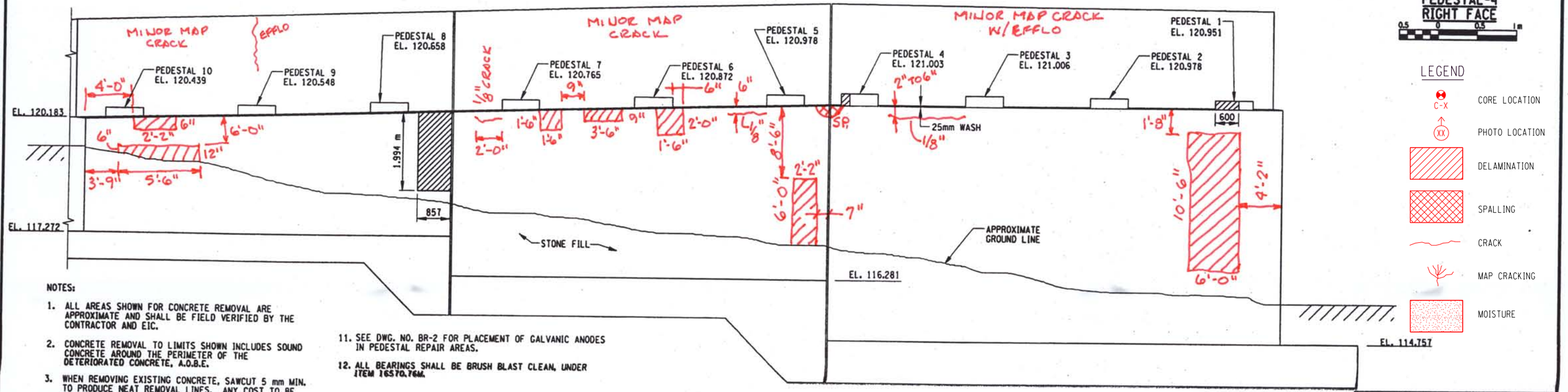

SOUTH FACE ELEVATION
0 1 2 m

NOTES:

1. ALL AREAS SHOWN FOR CONCRETE REMOVAL ARE APPROXIMATE AND SHALL BE FIELD VERIFIED BY THE CONTRACTOR AND EIC.
2. CONCRETE REMOVAL TO LIMITS SHOWN INCLUDES SOUND CONCRETE AROUND THE PERIMETER OF THE DETERIORATED CONCRETE, A.O.B.E.
3. WHEN REMOVING EXISTING CONCRETE, SAWCUT 5 mm MIN. TO PRODUCE NEAT REMOVAL LINES. ANY COST TO BE INCLUDED IN THE BID PRICE FOR ITEM 582.05 M.
4. ELEVATIONS ARE GIVEN FOR REFERENCE ONLY.
5. REFER TO CONTRACT D250025 FOR ORIGINAL CONSTRUCTION DETAILS.
6. FOR REMOVAL DETAILS SEE DWG. BR-1.
7. RESTORE TO ORIGINAL DIMENSIONS.
8. PEDESTALS NUMBERED FROM WEST TO EAST.
9. STRUCTURAL LIFTING OPERATIONS FOR CONCRETE REPAIRS, ITEM 585.02 M - TYPE B (LIFTING FROM ABUTMENT SEAT) SEE DWG NO. TSL-1.
10. NO DECORATIVE FINISHES WILL BE INSTALLED UNDER THIS CONTRACT.
11. SEE DWG. NO. BR-2 FOR PLACEMENT OF GALVANIC ANODES IN PEDESTAL REPAIR AREAS.
12. ALL BEARINGS SHALL BE BRUSH BLAST CLEAN, UNDER ITEM 16570.76M.

LIST OF ITEMS USED:

ITEM 18559.1696 M - PROTECTIVE SEALING OF STRUCTURAL CONCRETE, (SM)

ITEM 582.05 M - REMOVAL OF STRUCTURAL CONCRETE REPLACEMENT WITH CLASS A CONCRETE (CM)

ITEM 16570.76 M - LOCAL VACUUM CONTAINED CLEANING STRUCTURAL STEEL - IRREGULAR SURFACES (SM)

PEDESTAL-1 RIGHT FACE
0.5 0 0.5 1m

PEDESTAL-4 RIGHT FACE
0.5 0 0.5 1m

LEGEND

- C-X CORE LOCATION
- (XX) PHOTO LOCATION
- DELAMINATION
- SPALLING
- CRACK
- MAP CRACKING
- MOISTURE

B.I.N. 1031610

SPECIAL NOTE: ALL DIMENSIONS ARE SHOWN IN MILLIMETERS UNLESS OTHERWISE NOTED.

AS BUILT REVISIONS

SIGNATURE DATE

HIAWATHA BLVD, OVER MALL RAMPS, I-81 & RAMP B

SOUTH ABUTMENT

STATE OF NEW YORK
DEPARTMENT OF TRANSPORTATION

C&S Engineers, Inc.

FILENAME	REGION	DATE	DRAWING NO.
380466LB_A1A	3	OCT 2004	ST12-3

DESIGN SUPERVISOR PWW JOB MANAGER TAS DESIGNED BY JRF DRAFTED BY JRF CHECKED BY JRF ESTIMATED BY TAS

FILE NAME = bridge 2 bw
DATE/TIME = 11/8/2004 11:22 PM
USER = davidw

FED ROAD REG. NO.	STATE	CONTRACT NO.	SHEET NO.	TOTAL SHEETS
1	N.Y.	D259742	590	788

INTERSTATE ROUTE 505: OSWEGO BLVD. FIC - 56 - 11
BRIDGE REHABILITATION PROJECT (ELEMENT SPECIFIC)
VARIOUS BRIDGES ON INTERSTATES 81 & 690
CITY OF SYRACUSE
ONONDAGA COUNTY
P.I.N. 3804.66 | B.I.N. 1031610

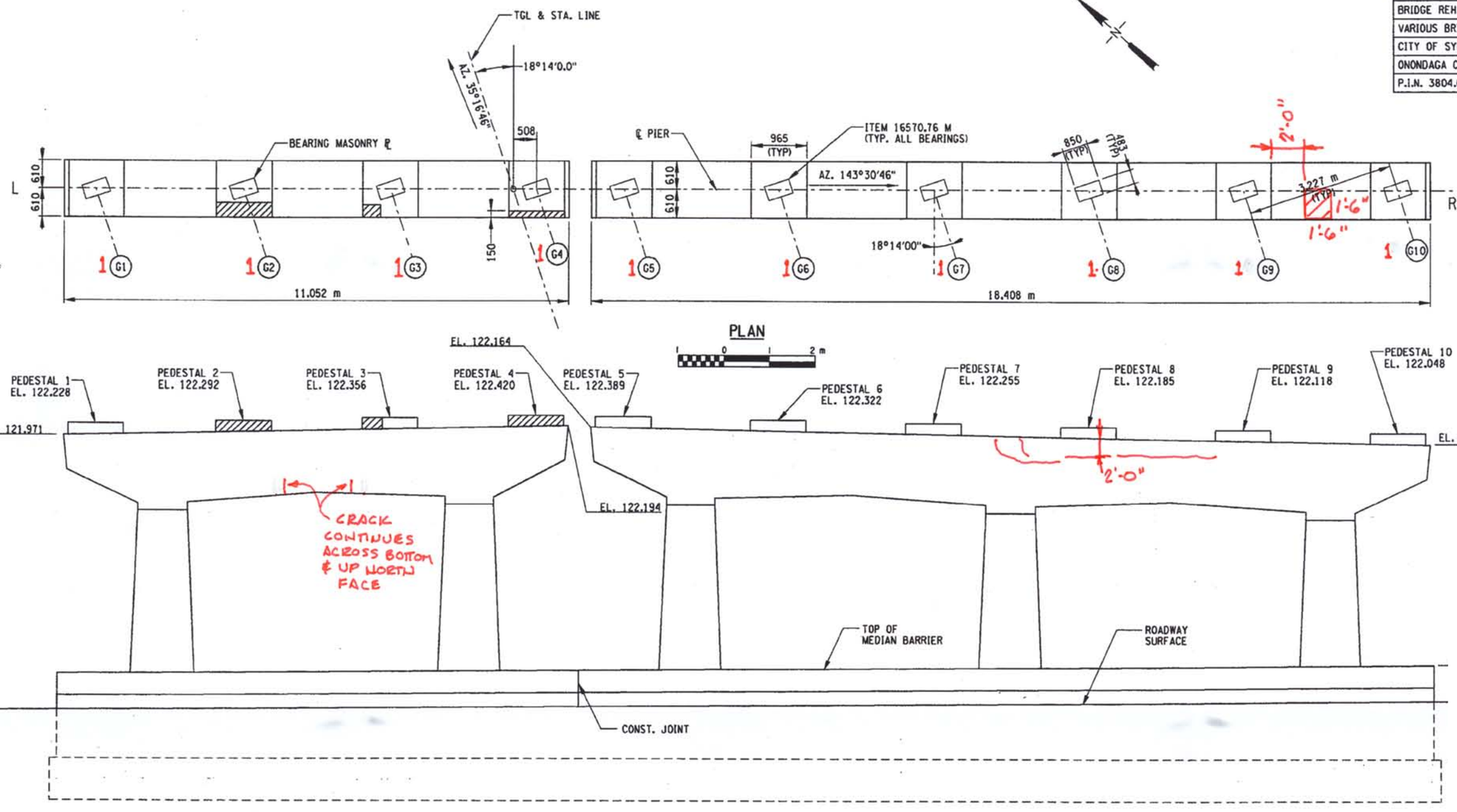

SOUTH FACE ELEVATION
0 2 m

NOTES:
1. ALL AREAS SHOWN FOR CONCRETE REMOVAL ARE APPROXIMATE AND SHALL BE FIELD VERIFIED BY THE CONTRACTOR AND EIC.
2. CONCRETE REMOVAL TO LIMITS SHOWN INCLUDES SOUND CONCRETE AROUND THE PERIMETER OF THE DETERIORATED CONCRETE, A.O.B.E.
3. WHEN REMOVING EXISTING CONCRETE, SAWCUT 5 mm MIN. TO PRODUCE NEAT REMOVAL LINES. ANY COST TO BE INCLUDED IN THE BID PRICE FOR ITEM 582.05 M.
4. ELEVATIONS ARE GIVEN FOR REFERENCE ONLY.
5. REFER TO CONTRACT FIC D250025 FOR ORIGINAL CONSTRUCTION DETAILS.
6. FOR REMOVAL DETAILS SEE DWG. BR-1.
7. RESTORE TO ORIGINAL DIMENSIONS.
8. PEDESTALS NUMBERED FROM WEST TO EAST.
9. NO DECORATIVE FINISHES WILL BE INSTALLED UNDER THIS CONTRACT.
10. SEE DWG. NO. BR-2 FOR DETAILS FOR PLACEMENT OF GALVANIC ANODES IN PEDESTAL REPAIR AREAS.

LEGEND
- C-X — CORE LOCATION
- XX — PHOTO LOCATION
- DELAMINATION
- SPALLING
- CRACK
- MAP CRACKING
- MOISTURE

LIST OF ITEMS USED:

ITEM 18559.1696 M - PROTECTIVE SEALING OF STRUCTURAL CONCRETE, (SM)

ITEM 582.05 M - REMOVAL OF STRUCTURAL CONCRETE - REPLACEMENT WITH CLASS A CONCRETE (CM)

ITEM 16570.76 M - LOCAL VACUUM CONTAINED CLEANING STRUCTURAL STEEL - IRREGULAR SURFACES (SM)

SPECIAL NOTE: ALL DIMENSIONS ARE SHOWN IN MILLIMETERS UNLESS OTHERWISE NOTED.

B.I.N. 1031610

AS BUILT REVISIONS

SIGNATURE DATE

HIAWATHA BLVD. OVER MALL RAMPS, I-81 & RAMP B

PIER 1

STATE OF NEW YORK
DEPARTMENT OF TRANSPORTATION

FILENAME	REGION	DATE	DRAWING NO.
380439LB_P2A	3	OCT 2004	ST12-4

C&S Engineers, Inc.
SYRACUSE • BUFFALO • BINGHAMTON

DESIGN SUPERVISOR PWW | JOB MANAGER TAS | DESIGNED BY JRF | CHECKED BY TAS | DRAFTED BY JRF | ESTIMATED BY ____ | CHECKED BY ____

FILE NAME = i:\hb\1982\...\phase 2 bridge plans\1031610\edp\380466lb_p2a.dgn
DATE/TIME = 11/8/2004 1 PM
USER = davidw

FED ROAD REG. NO.	STATE	CONTRACT NO.	SHEET NO.	TOTAL SHEETS
1	N.Y.	D259742	590	788

INTERSTATE ROUTE 505: OSWEGO BLVD. FIC - 56 - 11
BRIDGE REHABILITATION PROJECT (ELEMENT SPECIFIC)
VARIOUS BRIDGES ON INTERSTATES 81 & 690
CITY OF SYRACUSE
ONONDAGA COUNTY
P.I.N. 3804.66 | B.I.N. 1031610

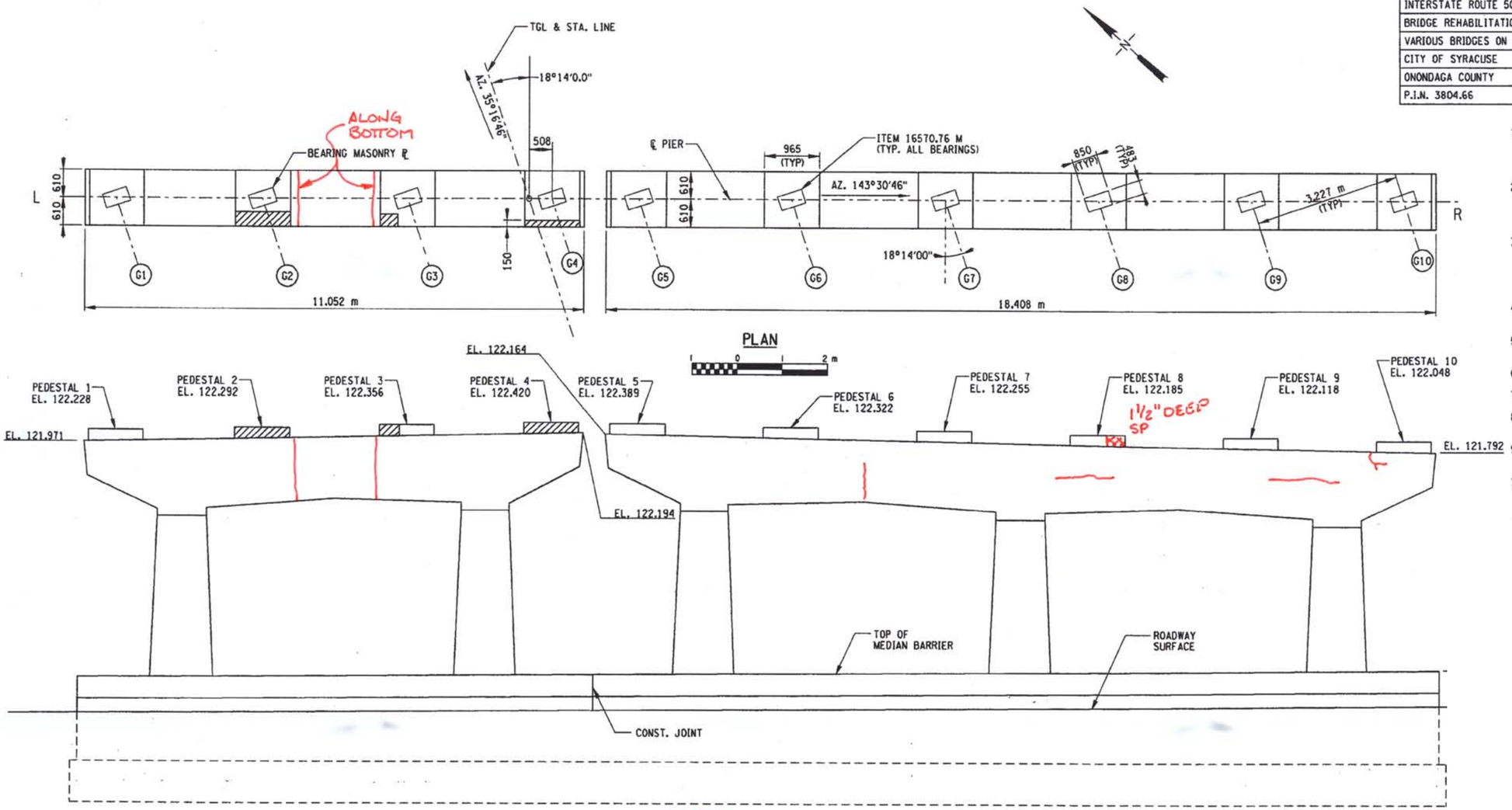

NOTES:

1. ALL AREAS SHOWN FOR CONCRETE REMOVAL ARE APPROXIMATE AND SHALL BE FIELD VERIFIED BY THE CONTRACTOR AND EIC.
2. CONCRETE REMOVAL TO LIMITS SHOWN INCLUDES SOUND CONCRETE AROUND THE PERIMETER OF THE DETERIORATED CONCRETE, A.O.B.E.
3. WHEN REMOVING EXISTING CONCRETE, SAWCUT 5 mm MIN. TO PRODUCE NEAT REMOVAL LINES. ANY COST TO BE INCLUDED IN THE BID PRICE FOR ITEM 582.05 M.
4. ELEVATIONS ARE GIVEN FOR REFERENCE ONLY.
5. REFER TO CONTRACT FIC D250025 FOR ORIGINAL CONSTRUCTION DETAILS.
6. FOR REMOVAL DETAILS SEE DWG. BR-1.
7. RESTORE TO ORIGINAL DIMENSIONS.
8. PEDESTALS NUMBERED FROM WEST TO EAST.
9. NO DECORATIVE FINISHES WILL BE INSTALLED UNDER THIS CONTRACT.
10. SEE DWG. NO. BR-2 FOR DETAILS FOR PLACEMENT OF GALVANIC ANODES IN PEDESTAL REPAIR AREAS.

LEGEND

- C-X CORE LOCATION
- XX PHOTO LOCATION
- DELAMINATION
- SPALLING
- CRACK
- MAP CRACKING
- MOISTURE

LIST OF ITEMS USED:

ITEM 18559.1696 M - PROTECTIVE SEALING OF STRUCTURAL CONCRETE, (SM)

ITEM 582.05 M - REMOVAL OF STRUCTURAL CONCRETE - REPLACEMENT WITH CLASS A CONCRETE (CM)

ITEM 16570.76 M - LOCAL VACUUM CONTAINED CLEANING STRUCTURAL STEEL - IRREGULAR SURFACES (SM)

B.I.N. 1031610

SPECIAL NOTE: ALL DIMENSIONS ARE SHOWN IN MILLIMETERS UNLESS OTHERWISE NOTED.

AS BUILT REVISIONS

SIGNATURE | DATE

HIAWATHA BLVD, OVER MALL RAMPS, I-81 & RAMP B

PIER 1

STATE OF NEW YORK
DEPARTMENT OF TRANSPORTATION

C&S Engineers, Inc.

FILENAME	REGION	DATE	DRAWING NO.
380439LB_P2A	3	OCT 2004	ST12-4

FILE NAME = I:\hb\1902...\phase 2 bridge plans\1031610\adp\380466lb_p2a.dgn
DATE/TIME = 11/8/2004 ... PM
USER = davidw

DESIGN SUPERVISOR PWW | JOB MANAGER TAS | DESIGNED BY JRF | CHECKED BY TAS | ESTIMATED BY JRF | DRAFTED BY JRF | CHECKED BY JRF

FED ROAD REG. NO.	STATE	CONTRACT NO.	SHEET NO.	TOTAL SHEETS
1	N.Y.	D259742	590	788

INTERSTATE ROUTE 505; OSWEGO BLVD. FIC - 56 - 11
BRIDGE REHABILITATION PROJECT (ELEMENT SPECIFIC)
VARIOUS BRIDGES ON INTERSTATES 81 & 690
CITY OF SYRACUSE
ONONDAGA COUNTY
P.I.N. 3804.66 | B.I.N. 1031610

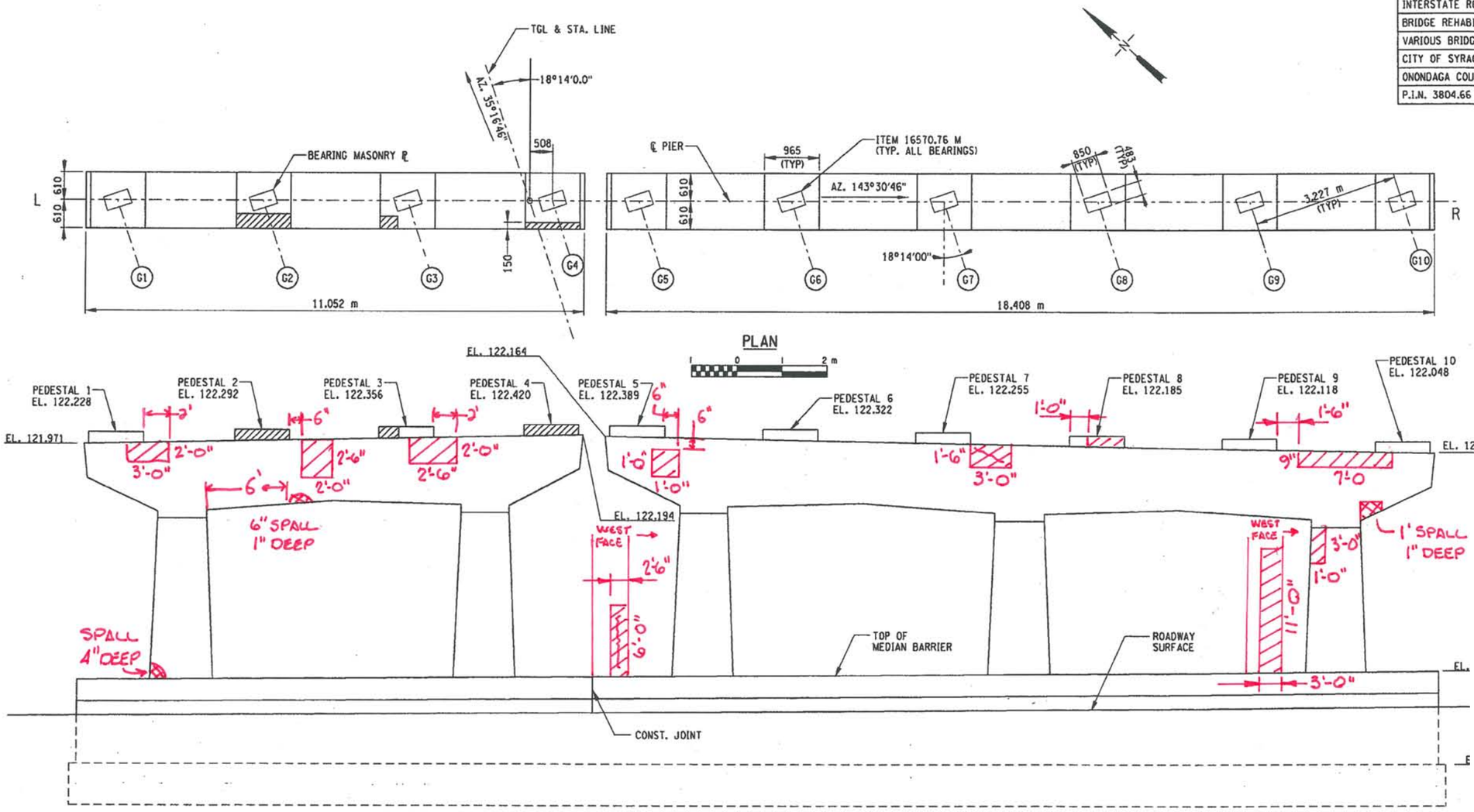

SOUTH FACE ELEVATION

0 1 2 m

NOTES:

1. ALL AREAS SHOWN FOR CONCRETE REMOVAL ARE APPROXIMATE AND SHALL BE FIELD VERIFIED BY THE CONTRACTOR AND E/C.
2. CONCRETE REMOVAL TO LIMITS SHOWN INCLUDES SOUND CONCRETE AROUND THE PERIMETER OF THE DETERIORATED CONCRETE, A.O.B.E.
3. WHEN REMOVING EXISTING CONCRETE, SAWCUT 5 mm MIN. TO PRODUCE NEAT REMOVAL LINES. ANY COST TO BE INCLUDED IN THE BID PRICE FOR ITEM 582.05 M.
4. ELEVATIONS ARE GIVEN FOR REFERENCE ONLY.
5. REFER TO CONTRACT FIC D250025 FOR ORIGINAL CONSTRUCTION DETAILS.
6. FOR REMOVAL DETAILS SEE DWG. BR-1.
7. RESTORE TO ORIGINAL DIMENSIONS.
8. PEDESTALS NUMBERED FROM WEST TO EAST.
9. NO DECORATIVE FINISHES WILL BE INSTALLED UNDER THIS CONTRACT.
10. SEE DWG. NO. BR-2 FOR DETAILS FOR PLACEMENT OF GALVANIC ANODES IN PEDESTAL REPAIR AREAS.

LEGEND

- CORE LOCATION (C-X)
- PHOTO LOCATION (XX)
- DELAMINATION
- SPALLING
- CRACK
- MAP CRACKING
- MOISTURE

LIST OF ITEMS USED:

ITEM 18559.1696 M - PROTECTIVE SEALING OF STRUCTURAL CONCRETE, (SM)

ITEM 582.05 M - REMOVAL OF STRUCTURAL CONCRETE - REPLACEMENT WITH CLASS A CONCRETE (CM)

ITEM 16570.76 M - LOCAL VACUUM CONTAINED CLEANING STRUCTURAL STEEL - IRREGULAR SURFACES (SM)

TABLE - ITEM 582.05 M

ELEMENT	QUANTITY (CM)
PEDESTAL	0.30

SPECIAL NOTE: ALL DIMENSIONS ARE SHOWN IN MILLIMETERS UNLESS OTHERWISE NOTED.

B.I.N. 1031610

AS BUILT REVISIONS

SIGNATURE DATE

HIAWATHA BLVD. OVER MALL RAMPS, I-81 & RAMP B

PIER 2

STATE OF NEW YORK
DEPARTMENT OF TRANSPORTATION

FILENAME	REGION	DATE	DRAWING NO.
380439LB_P2A	3	OCT 2004	ST12-4

C&S Engineers, Inc. SYRACUSE • BUFFALO • BINGHAMTON

DESIGN SUPERVISOR PWW | JOB MANAGER TAS | DESIGNED BY JRF | CHECKED BY JRF | DRAFTED BY TAS | ESTIMATED BY

FILE NAME = i:\hb\1982\...\phase 2 bridge plans\1031610\edp\3804466lb_p2a.dgn
DATE/TIME = 11/8/2004 1:... PM
USER = devidu

FED ROAD REG. NO.	STATE	CONTRACT NO.	SHEET NO.	TOTAL SHEETS
1	N.Y.	D259742	590	788

INTERSTATE ROUTE 505: OSWEGO BLVD. FIC - 56 - 11
BRIDGE REHABILITATION PROJECT (ELEMENT SPECIFIC)
VARIOUS BRIDGES ON INTERSTATES 81 & 690
CITY OF SYRACUSE
ONONDAGA COUNTY
P.I.N. 3804.66 B.I.N. 1031610

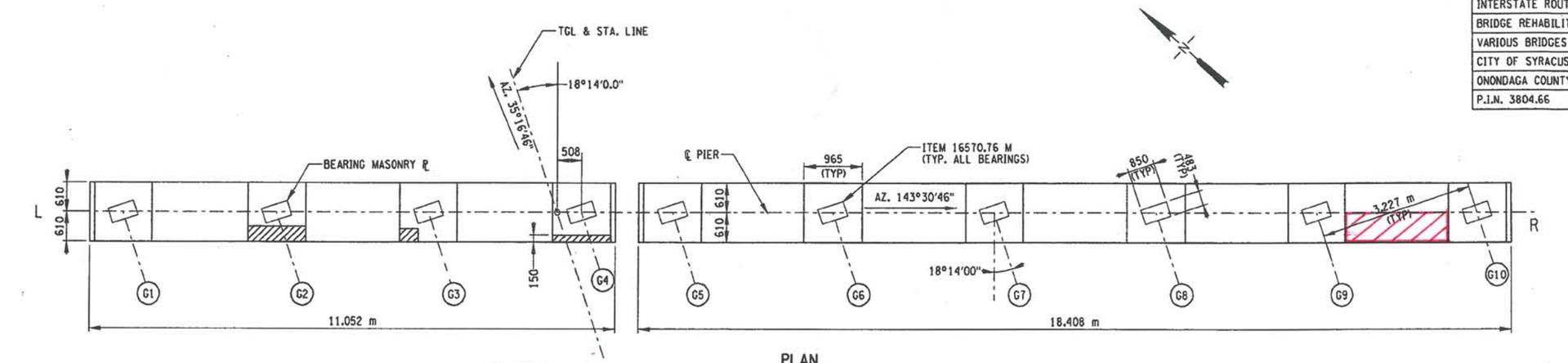

PLAN

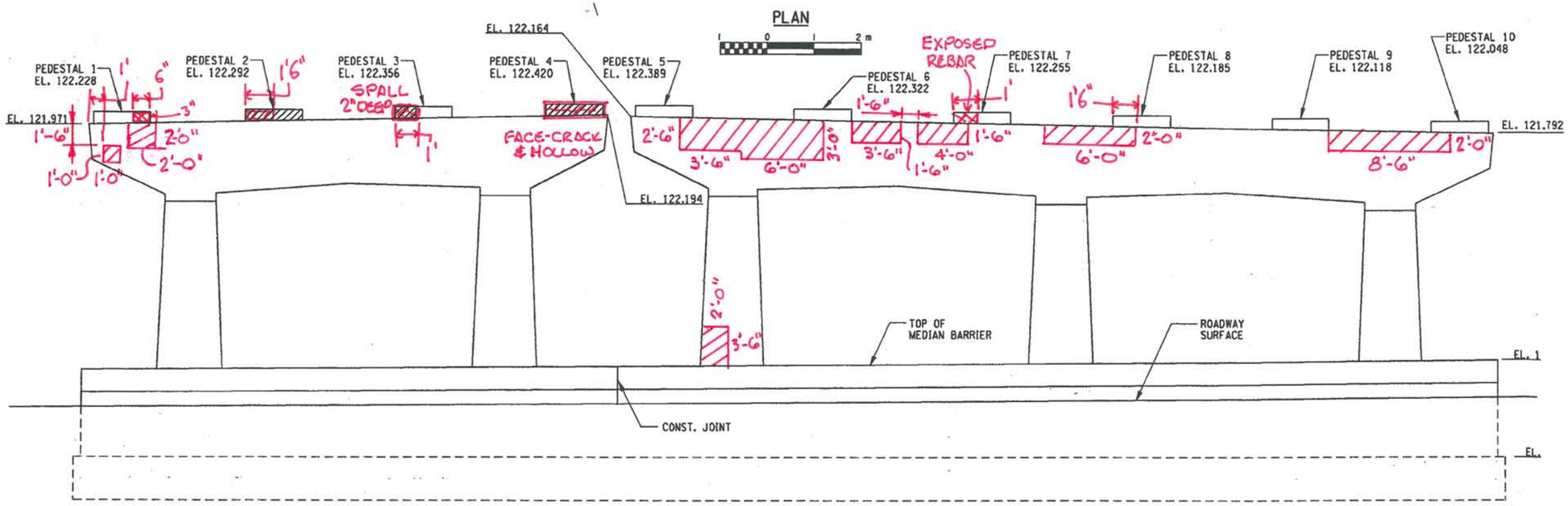

NORTH
~~SOUTH~~ FACE ELEVATION

NOTES:
1. ALL AREAS SHOWN FOR CONCRETE REMOVAL ARE APPROXIMATE AND SHALL BE FIELD VERIFIED BY THE CONTRACTOR AND EIC.
2. CONCRETE REMOVAL TO LIMITS SHOWN INCLUDES SOUND CONCRETE AROUND THE PERIMETER OF THE DETERIORATED CONCRETE, A.O.B.E.
3. WHEN REMOVING EXISTING CONCRETE, SAWCUT 5 mm MIN. TO PRODUCE NEAT REMOVAL LINES. ANY COST TO BE INCLUDED IN THE BID PRICE FOR ITEM 582.05 M.
4. ELEVATIONS ARE GIVEN FOR REFERENCE ONLY.
5. REFER TO CONTRACT FIC D250025 FOR ORIGINAL CONSTRUCTION DETAILS.
6. FOR REMOVAL DETAILS SEE DWG. BR-1.
7. RESTORE TO ORIGINAL DIMENSIONS.
8. PEDESTALS NUMBERED FROM WEST TO EAST.
9. NO DECORATIVE FINISHES WILL BE INSTALLED UNDER THIS CONTRACT.
10. SEE DWG. NO. BR-2 FOR DETAILS FOR PLACEMENT OF GALVANIC ANODES IN PEDESTAL REPAIR AREAS.

LEGEND

- C-X — CORE LOCATION
- XX — PHOTO LOCATION
- DELAMINATION
- SPALLING
- CRACK
- MAP CRACKING
- MOISTURE

SPECIAL NOTE: ALL DIMENSIONS ARE SHOWN IN MILLIMETERS UNLESS OTHERWISE NOTED.

LIST OF ITEMS USED:

ITEM 18559.1696 M - PROTECTIVE SEALING OF STRUCTURAL CONCRETE, (SM)

ITEM 582.05 M - REMOVAL OF STRUCTURAL CONCRETE - REPLACEMENT WITH CLASS A CONCRETE (CM)

ITEM 16570.76 M - LOCAL VACUUM CONTAINED CLEANING STRUCTURAL STEEL - IRREGULAR SURFACES (SM)

TABLE - ITEM 582.05 M

ELEMENT	QUANTITY (CM)
PEDESTAL	0.30

B.I.N. 1031610

AS BUILT REVISIONS

SIGNATURE DATE

HIAWATHA BLVD. OVER MALL RAMPS, I-81 & RAMP B

PIER 2

STATE OF NEW YORK
DEPARTMENT OF TRANSPORTATION

FILENAME	REGION	DATE	DRAWING NO.
380439LB_P2A	3	OCT 2004	ST12-4

C&S Engineers, Inc. SYRACUSE - BUFFALO - BINGHAMTON

DESIGN SUPERVISOR PWW JOB MANAGER TAS DESIGNED BY JRF DRAFTED BY JRF ESTIMATED BY TAS CHECKED BY JRF CHECKED BY

FILE NAME = i:\hb\1982\...\phase 2 bridge plans\1031610\edp\380466lb_p2a.dgn
DATE/TIME = 11/8/2004 1 PM
USER = davidw

CONCRETE TABLE (m³)		
PEDESTAL	QUANTITY	ITEM NO.
1	0.22	555.09 M
10	0.15	555.09 M

TABLE OF STRUCTURAL LIFTING (JACKING LOADS)					
LOCATION	ITEM	QTY (EA)	DL (KN)	LL+I (KN)	TOTAL (KN)
PED. 1 & 10 EXP.	585.02 M	2	540	78	618

* STRUCTURAL LIFTING FROM ABUTMENT SEAT SHALL BE IN PLACE PRIOR TO CONCRETE REPAIRS TO PEDESTALS.

TABLE - ITEM 582.05 M	
ELEMENT	QUANTITY (CM)
PEDESTAL	0.09
STEM	5.79

TABLE - ITEM 11555.8198 M	
ELEMENT	QUANTITY (M)
ABUTMENT	4.79

FED ROAD REG. NO.	STATE	CONTRACT NO.	SHEET NO.	TOTAL SHEETS
1	N.Y.	D259742	591	788

INTERSTATE ROUTE 505: OSWEGO BLVD. FIC - 56 - 11
BRIDGE REHABILITATION PROJECT (ELEMENT SPECIFIC)
VARIOUS BRIDGES ON INTERSTATES 81 & 690
CITY OF SYRACUSE
ONONDAGA COUNTY
P.I.N. 3804.66 B.I.N. 1031610

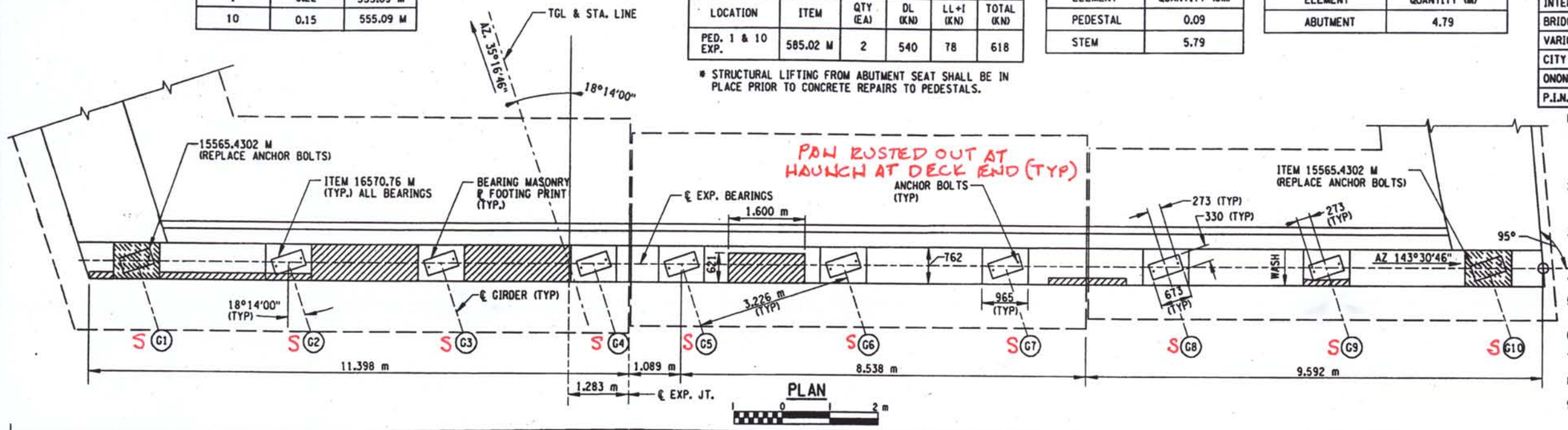

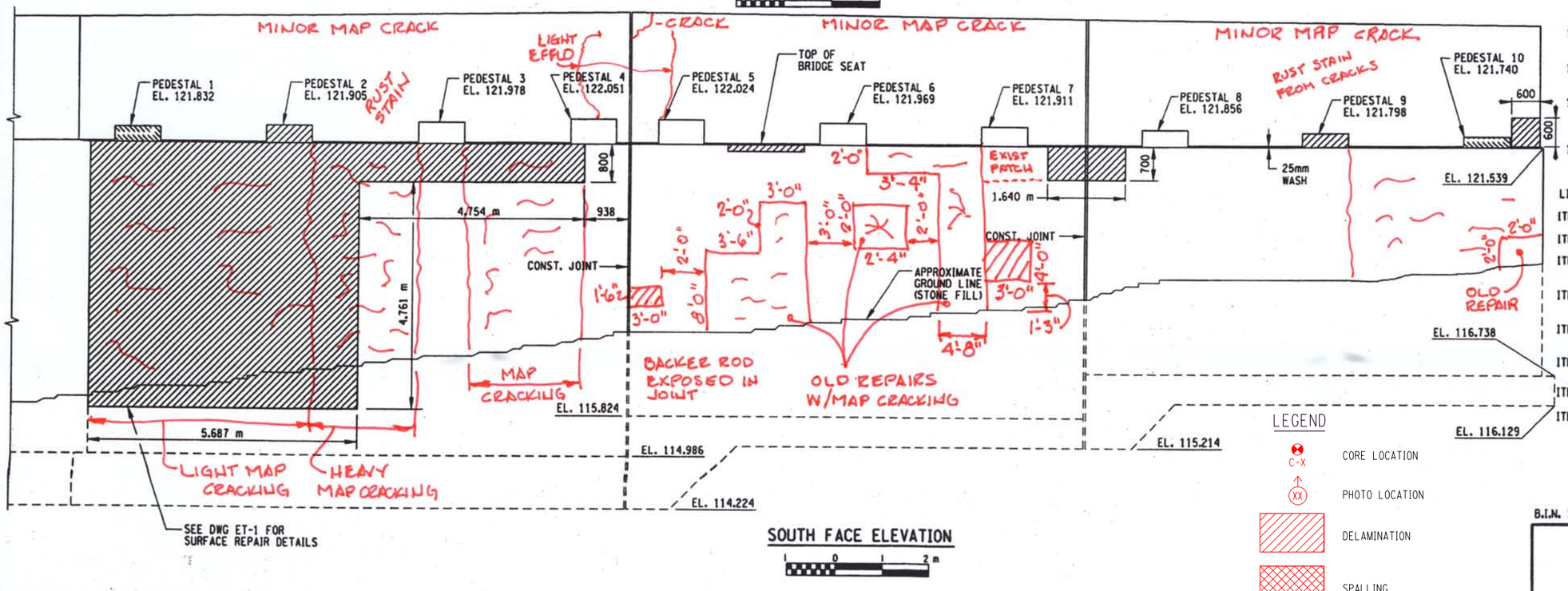

NOTES:

1. ALL AREAS SHOWN FOR CONCRETE REMOVAL ARE APPROXIMATE AND SHALL BE FIELD VERIFIED BY THE CONTRACTOR AND EIC.
2. CONCRETE REMOVAL TO LIMITS SHOWN INCLUDES SOUND CONCRETE AROUND THE PERIMETER OF THE DETERIORATED CONCRETE, A.O.B.E.
3. WHEN REMOVING EXISTING CONCRETE, SAWCUT 5 mm MIN. TO PRODUCE NEAT REMOVAL LINES. ANY COST TO BE INCLUDED IN THE BID PRICE FOR ITEM 582.05 M.
4. ELEVATIONS ARE GIVEN FOR REFERENCE ONLY.
5. REFER TO CONTRACT D250025 FOR ORIGINAL CONSTRUCTION DETAILS.
6. FOR REMOVAL DETAILS SEE DWG. BR-1.
7. RESTORE TO ORIGINAL DIMENSIONS.
8. PEDESTALS NUMBERED FROM WEST TO EAST.
9. STRUCTURAL LIFTING OPERATIONS FOR CONCRETE REPAIRS, ITEM 585.02 M - TYPE B (LIFTING FROM ABUTMENT SEAT) SEE DWG NO. TSL-1.
10. CRACKS IN ABUTMENT WILL BE REPAIRED AS ORDERED BY EIC BY INJECTION GROUTING.
11. NO DECORATIVE FINISHES WILL BE INSTALLED UNDER THIS CONTRACT.
12. SEE DWG. NO. BR-2 FOR DETAILS FOR PLACEMENT OF GALVANIC ANODES IN PEDESTAL REPAIR AREAS.
13. ALL BEARINGS SHALL BE BRUSH BLAST CLEANED, UNDER ITEM 16570.76 M.

LIST OF ITEMS USED:

ITEM 580.01 M - REMOVAL OF STRUCTURAL CONCRETE (CM)
ITEM 555.09 M - CONCRETE FOR STRUCTURES, CLASS HP (CM)
ITEM 11555.8198 M - CRACK REPAIR (3mm OR WIDER) BY OF PORTLAND CEMENT GROUT (M)
ITEM 585.02 M - STRUCTURE LIFTING OPERATIONS - (TYPE B) (LIFT FROM ABUTMENT SEAT)
ITEM 18559.1696 M - PROTECTIVE SEALING OF STRUCTURAL CONCRETE, (SM)
ITEM 582.05 M - REMOVAL OF STRUCTURAL CONCRETE REPLACEMENT WITH CLASS A CONCRETE (CM)
ITEM 15565.4302 M - BRIDGE BEARING RESTORATION (EA)
ITEM 16570.76 M - LOCAL VACUUM CONTAINED CLEANING STRUCTURAL STEEL - IRREGULAR SURFACES (SM)

LEGEND

- C-X — CORE LOCATION
- XX — PHOTO LOCATION
- DELAMINATION
- SPALLING
- CRACK
- MAP CRACKING
- MOISTURE

B.I.N. 1031610

SPECIAL NOTE: ALL DIMENSIONS ARE SHOWN IN MILLIMETERS UNLESS OTHERWISE NOTED.

AS BUILT REVISIONS

SIGNATURE DATE

HIAWATHA BLVD. OVER MALL RAMPS, I-81 & RAMP B

NORTH ABUTMENT

STATE OF NEW YORK
DEPARTMENT OF TRANSPORTATION

C&S Engineers, Inc. SYRACUSE • BUFFALO • BINGHAMTON

FILENAME	REGION	DATE	DRAWING NO.
380466LB_A2A	3	OCT 2004	ST12-5

DESIGN SUPERVISOR PWW — JOB MANAGER TAS — DESIGNED BY JRF — DRAFTED BY JRF — ESTIMATED BY TAS — CHECKED BY JRF

FILE NAME = I:\Active\Projects\Phase 2 bridge plans\1803\380466lb_a2a.dgn
DATE/TIME = 11/8/2004 3:11:22 PM
USER = davidw

IN-DEPTH PHOTO DOCUMENTATION

C&S Engineers, Inc.
499 Col. Eileen Collins Blvd.
Syracuse, New York 13212
Phone: (315) 455-2000
Fax: (315) 455-9667
www.cscos.com

Hiawatha Boulevard over I-81 - BIN 1031610



DESCRIPTION: SOUTH ABUTMENT – WEST END – DELAMINATED SECTION UNDER PEDESTAL 1

PHOTO 1



DESCRIPTION: SOUTH ABUTMENT – WEST END – DELAMINATED SECTION UNDER PEDESTAL 1

PHOTO 2

C&S Engineers, Inc.
499 Col. Eileen Collins Blvd.
Syracuse, New York 13212
Phone: (315) 455-2000
Fax: (315) 455-9667
www.cscos.com

Hiawatha Boulevard over I-81 - BIN 1031610



DESCRIPTION: SOUTH ABUTMENT – BELOW PEDESTAL 6 – DELAMINATED CONCRETE

PHOTO 3



DESCRIPTION: SOUTH ABUTMENT – BETWEEN PEDESTALS 4 AND 5 – DELAMINATED CONCRETE

PHOTO 4

C&S Engineers, Inc.
499 Col. Eileen Collins Blvd.
Syracuse, New York 13212
Phone: (315) 455-2000
Fax: (315) 455-9667
www.cscos.com

Hiawatha Boulevard over I-81 - BIN 1031610



DESCRIPTION: SOUTH ABUTMENT – BELOW PEDESTAL 7 – DELAMINATED CONCRETE

PHOTO 5



DESCRIPTION: SOUTHT ABUTMENT – BELOW PEDESTAL 10 – DELAMINATED CONCRETE

PHOTO 6

C&S Engineers, Inc.
499 Col. Eileen Collins Blvd.
Syracuse, New York 13212
Phone: (315) 455-2000
Fax: (315) 455-9667
www.cscos.com

Hiawatha Boulevard over I-81 - BIN 1031610



DESCRIPTION: SOUTH ABUTMENT – BAY 1 – DECK PAN DETERIATION – TYPICAL BAYS 1, 6 & 9

PHOTO 7



DESCRIPTION: SOUTH ABUTMENT – BAY 1 – DECK PAN DETERIATION – TYPICAL BAYS 1, 6 & 9

PHOTO 8

C&S Engineers, Inc.
499 Col. Eileen Collins Blvd.
Syracuse, New York 13212
Phone: (315) 455-2000
Fax: (315) 455-9667
www.cscos.com

Hiawatha Boulevard over I-81 - BIN 1031610



DESCRIPTION: SOUTH ABUTMENT – BETWEEN PEDESTALS 4 AND 5 – CONSTRUCTION JOINT

PHOTO 9



DESCRIPTION: SOUTH ABUTMENT – BETWEEN PEDESTALS 4 AND 5 – UPPER CONSTRUCTION JOINT – RUST STAINING OF BACKWALL (TYPICAL)

PHOTO 10

C&S Engineers, Inc.
499 Col. Eileen Collins Blvd.
Syracuse, New York 13212
Phone: (315) 455-2000
Fax: (315) 455-9667
www.cscos.com

Hiawatha Boulevard over I-81 - BIN 1031610



DESCRIPTION: SOUTH ABUTMENT – BETWEEN PEDESTALS 6 AND 7 – SPALLING CONCRETE

PHOTO 11



DESCRIPTION: SOUTH ABUTMENT – BETWEEN PEDESTALS 6 AND 7 – TYPICAL DECK PAN

PHOTO 12

C&S Engineers, Inc.
499 Col. Eileen Collins Blvd.
Syracuse, New York 13212
Phone: (315) 455-2000
Fax: (315) 455-9667
www.cscos.com

Hiawatha Boulevard over I-81 - BIN 1031610



DESCRIPTION: SOUTH ABUTMENT – BETWEEN PEDESTALS 7 AND 8 – SPALLING CONCRETE

PHOTO 13



DESCRIPTION: SOUTH ABUTMENT – BETWEEN PEDESTALS 9 AND 10 – DECK PAN DETERIATION

PHOTO 14

C&S Engineers, Inc.
499 Col. Eileen Collins Blvd.
Syracuse, New York 13212
Phone: (315) 455-2000
Fax: (315) 455-9667
www.cscos.com

Hiawatha Boulevard over I-81 - BIN 1031610



DESCRIPTION: SOUTH ABUTMENT – PEDESTAL 6 – BEARING (TYPICAL)

PHOTO 15



DESCRIPTION: SOUTH ABUTMENT – BACKWALL – BETWEEN PEDESTALS 2 AND 3 – RUST STAINS (TYPICAL)

PHOTO 16

C&S Engineers, Inc.
499 Col. Eileen Collins Blvd.
Syracuse, New York 13212
Phone: (315) 455-2000
Fax: (315) 455-9667
www.cscos.com

Hiawatha Boulevard over I-81 - BIN 1031610



DESCRIPTION: SOUTHWEST WINGWALL - LOOKING SOUTHWEST - TYPICAL

PHOTO 17



DESCRIPTION: PIER 1 – WEST END – LOOKING NORTHEAST – TYPICAL

PHOTO 18

C&S Engineers, Inc.
499 Col. Eileen Collins Blvd.
Syracuse, New York 13212
Phone: (315) 455-2000
Fax: (315) 455-9667
www.cscos.com

Hiawatha Boulevard over I-81 - BIN 1031610



DESCRIPTION: PIER 1 – CENTER – LOOKING NORTHEAST – TYPICAL

PHOTO 19



DESCRIPTION: PIER 1 – EAST END – LOOKING NORTHEAST – TYPICAL

PHOTO 20

C&S Engineers, Inc.
499 Col. Eileen Collins Blvd.
Syracuse, New York 13212
Phone: (315) 455-2000
Fax: (315) 455-9667
www.cscos.com

Hiawatha Boulevard over I-81 - BIN 1031610



DESCRIPTION: PIER 1 – SOUTH FACE – BETWEEN PEDESTALS 1 AND 2 – TOP OF CAP BEAM - TYPICAL

PHOTO 21



DESCRIPTION: PIER 1 – SOUTH FACE – BETWEEN PEDESTALS 9 AND 10 – TOP OF CAP BEAM – DELAMINATED CONCRETE

PHOTO 22

C&S Engineers, Inc.
499 Col. Eileen Collins Blvd.
Syracuse, New York 13212
Phone: (315) 455-2000
Fax: (315) 455-9667
www.cscos.com

Hiawatha Boulevard over I-81 - BIN 1031610



DESCRIPTION: PIER 1 – NORTH FACE – COLUMN 4 – LOOKING SOUTHEAST – TYPICAL

PHOTO 23



DESCRIPTION: PIER 1 – NORTH FACE – PEDESTAL 8 – POCKET SPALL

PHOTO 24

C&S Engineers, Inc.
499 Col. Eileen Collins Blvd.
Syracuse, New York 13212
Phone: (315) 455-2000
Fax: (315) 455-9667
www.cscos.com

Hiawatha Boulevard over I-81 - BIN 1031610



DESCRIPTION: PIER 1 – BETWEEN PEDESTALS 5 AND 6 – CONSTRUCTION JOINT - TYPICAL

PHOTO 25



DESCRIPTION: PIER 1 – NORTH FACE – LOOKING SOUTHEAST – BEARING (TYPICAL)

PHOTO 26

C&S Engineers, Inc.
499 Col. Eileen Collins Blvd.
Syracuse, New York 13212
Phone: (315) 455-2000
Fax: (315) 455-9667
www.cscos.com

Hiawatha Boulevard over I-81 - BIN 1031610



DESCRIPTION: PIER 2 –SOUTH FACE – PEDESTALS 1 AND 2 – LOOKING NORTHWEST – DELAMINATED CONCRETE

PHOTO 27



DESCRIPTION: PIER 2 –SOUTH FACE – PEDESTALS 3 AND 4 – LOOKING NORTHWEST – DELAMINATED CONCRETE

PHOTO 28

C&S Engineers, Inc.
499 Col. Eileen Collins Blvd.
Syracuse, New York 13212
Phone: (315) 455-2000
Fax: (315) 455-9667
www.cscos.com

Hiawatha Boulevard over I-81 - BIN 1031610



DESCRIPTION: PIER 2 –SOUTH FACE – PEDESTAL 5 – LOOKING NORTHWEST – DELAMINATED CONCRETE

PHOTO 29



DESCRIPTION: PIER 2 –SOUTH FACE – PEDESTAL 7 – LOOKING NORTHWEST – DELAMINATED CONCRETE WITH CRACK

PHOTO 30

C&S Engineers, Inc.
499 Col. Eileen Collins Blvd.
Syracuse, New York 13212
Phone: (315) 455-2000
Fax: (315) 455-9667
www.cscos.com

Hiawatha Boulevard over I-81 - BIN 1031610



DESCRIPTION: PIER 2 –SOUTH FACE – PEDESTAL 8 – LOOKING NORTHWEST – DELAMINATED CONCRETE ON PEDESTAL

PHOTO 31



DESCRIPTION: PIER 2 – NORTH FACE – WEST END – LOOKING SOUTH EAST – DELAMINATED CONCRETE ON CAPBEAM

PHOTO 32

C&S Engineers, Inc.
499 Col. Eileen Collins Blvd.
Syracuse, New York 13212
Phone: (315) 455-2000
Fax: (315) 455-9667
www.cscos.com

Hiawatha Boulevard over I-81 - BIN 1031610



DESCRIPTION: PIER 2 – NORTH FACE – PEDESTAL 2 – DELAMINATED COCNRETE

PHOTO 33



DESCRIPTION: PIER 2 – NORTH FACE – PEDESTAL 3 – SPALLING COCNRETE

PHOTO 34

C&S Engineers, Inc.
499 Col. Eileen Collins Blvd.
Syracuse, New York 13212
Phone: (315) 455-2000
Fax: (315) 455-9667
www.cscos.com

Hiawatha Boulevard over I-81 - BIN 1031610



DESCRIPTION: PIER 2 – NORTH FACE – PEDESTAL 4 – DELAMINATED CONCRETE

PHOTO 35



DESCRIPTION: PIER 2 – NORTH FACE – CAP BEAM – PEDESTAL 6 – DELAMINATED CONCRETE

PHOTO 36

C&S Engineers, Inc.
499 Col. Eileen Collins Blvd.
Syracuse, New York 13212
Phone: (315) 455-2000
Fax: (315) 455-9667
www.cscos.com

Hiawatha Boulevard over I-81 - BIN 1031610



DESCRIPTION: PIER 2 – NORTH FACE – CAP BEAM – UNDER PEDESTAL 6 – DELAMINATED CONCRETE

PHOTO 37



DESCRIPTION: PIER 2 – NORTH FACE – CAP BEAM – UNDER PEDESTAL 9 – DELAMINATED CONCRETE

PHOTO 38

C&S Engineers, Inc.
499 Col. Eileen Collins Blvd.
Syracuse, New York 13212
Phone: (315) 455-2000
Fax: (315) 455-9667
www.cscos.com

Hiawatha Boulevard over I-81 - BIN 1031610



DESCRIPTION: PIER 2 – NORTH FACE – CAP BEAM – BETWEEN PEDESTALS 9 AND 10 – DELAMINATED CONCRETE

PHOTO 39



DESCRIPTION: PIER 2 – PEDESTAL 9 – BEARING (TYPICAL)

PHOTO 40

C&S Engineers, Inc.
499 Col. Eileen Collins Blvd.
Syracuse, New York 13212
Phone: (315) 455-2000
Fax: (315) 455-9667
www.cscos.com

Hiawatha Boulevard over I-81 - BIN 1031610



DESCRIPTION: PIER 2 – BAY 8 LOOKING SOUTH – STEEL GIRDERS AND DECK (TYPICAL)

PHOTO 41



DESCRIPTION: WEST FACE – FACING SOUTH EAST – WEST GIRDER AND PARAPET

PHOTO 42

C&S Engineers, Inc.
499 Col. Eileen Collins Blvd.
Syracuse, New York 13212
Phone: (315) 455-2000
Fax: (315) 455-9667
www.cscos.com

Hiawatha Boulevard over I-81 - BIN 1031610



DESCRIPTION: NORTH ABUTMENT – WEST END – LIGHT MAP CRACKING

PHOTO 43



DESCRIPTION: NORTH ABUTMENT – WEST END – HEAVY MAP CRACKING

PHOTO 44

C&S Engineers, Inc.
499 Col. Eileen Collins Blvd.
Syracuse, New York 13212
Phone: (315) 455-2000
Fax: (315) 455-9667
www.cscos.com

Hiawatha Boulevard over I-81 - BIN 1031610



DESCRIPTION: NORTH ABUTMENT – CENTER– HEAVY MAP CRACKING

PHOTO 45



DESCRIPTION: NORTH ABUTMENT – EAST END– LIGHT MAP CRACKING

PHOTO 46

C&S Engineers, Inc.
499 Col. Eileen Collins Blvd.
Syracuse, New York 13212
Phone: (315) 455-2000
Fax: (315) 455-9667
www.cscos.com

Hiawatha Boulevard over I-81 - BIN 1031610



DESCRIPTION: NORTH ABUTMENT – BACKWALL – BETWEEN PEDESTALS 1 AND 2 – MAP CRACKING (TYPICAL)

PHOTO 47



DESCRIPTION: NORTH ABUTMENT – BACKWALL – BETWEEN PEDESTALS 4 AND 5 – CONSTRUCTION JOINT

PHOTO 48

C&S Engineers, Inc.
499 Col. Eileen Collins Blvd.
Syracuse, New York 13212
Phone: (315) 455-2000
Fax: (315) 455-9667
www.cscos.com

Hiawatha Boulevard over I-81 - BIN 1031610



DESCRIPTION: NORTH ABUTMENT – LONGITUDUINAL DECK JOINT – BAY 4 – CONSTRUCTION JOINT

PHOTO 49



DESCRIPTION: NORTH ABUTMENT – PEDESTAL 1 – BEARING – TYPICAL

PHOTO 50

C&S Engineers, Inc.
499 Col. Eileen Collins Blvd.
Syracuse, New York 13212
Phone: (315) 455-2000
Fax: (315) 455-9667
www.cscos.com

Hiawatha Boulevard over I-81 - BIN 1031610



DESCRIPTION: NORTH ABUTMENT – DECK PAN – BETWEEN PEDESTALS 5 AND 6 – RUSTED (TYPICAL)

PHOTO 51



DESCRIPTION: NORTH ABUTMENT

PHOTO 52

C&S Engineers, Inc.
499 Col. Eileen Collins Blvd.
Syracuse, New York 13212
Phone: (315) 455-2000
Fax: (315) 455-9667
www.cscos.com

Hiawatha Boulevard over I-81 - BIN 1031610



DESCRIPTION: PIER 1 – FACING WEST

PHOTO 53



DESCRIPTION: PIER 2 – FACING SOUTH

PHOTO 54

C&S Engineers, Inc.
499 Col. Eileen Collins Blvd.
Syracuse, New York 13212
Phone: (315) 455-2000
Fax: (315) 455-9667
www.cscos.com

Hiawatha Boulevard over I-81 - BIN 1031610



DESCRIPTION: ELEVATION – FACING NORTH

PHOTO 55



DESCRIPTION: ELEVATION – FACING NORTHEAST

PHOTO 56

C&S Engineers, Inc.
499 Col. Eileen Collins Blvd.
Syracuse, New York 13212
Phone: (315) 455-2000
Fax: (315) 455-9667
www.cscos.com

Hiawatha Boulevard over I-81 - BIN 1031610



DESCRIPTION: BRIDGE DECK – FACING NORTHEAST

PHOTO 57

DESCRIPTION:

PHOTO 58

BIN 1031610
HIAWATHA BLVD
OVER I 81
PHOTO LOCATION MAP

LEGEND

XX — PHOTO LOCATION

XX — HIDDEN PHOTO LOCATION

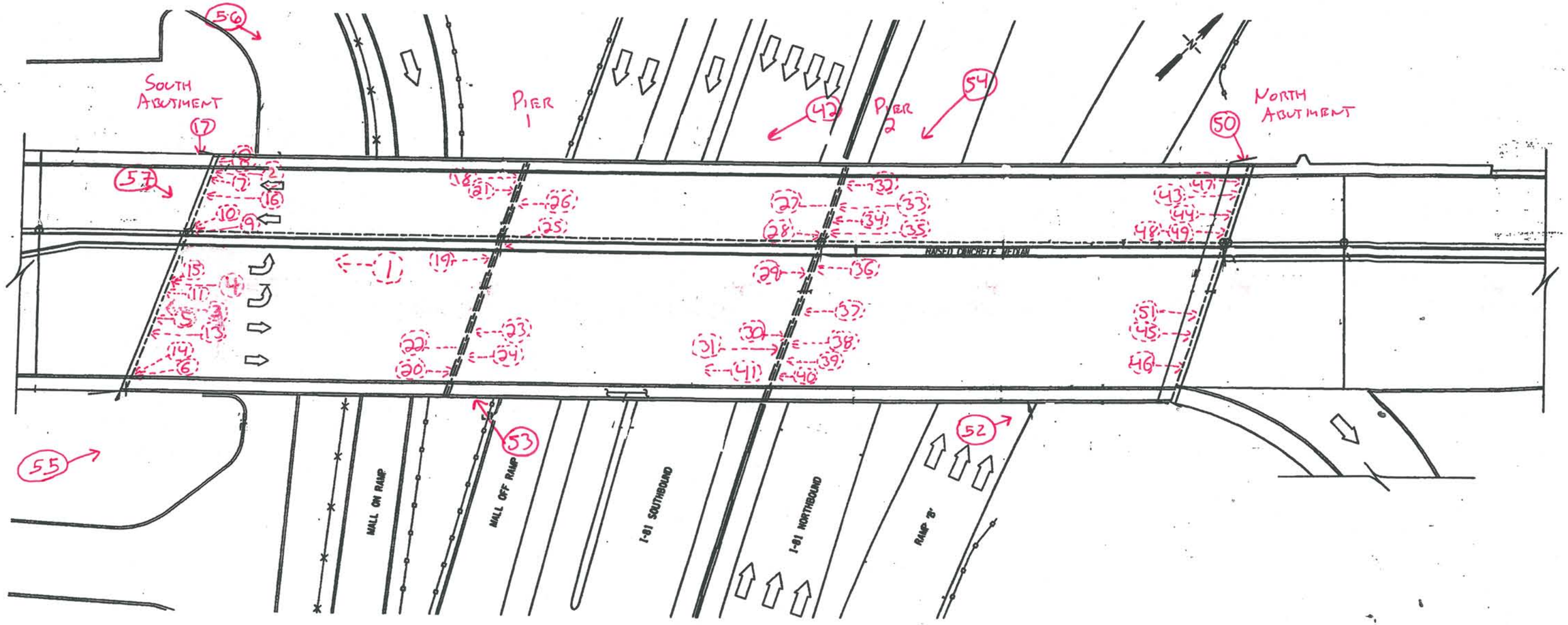

ASBESTOS DOCUMENTATION

ASBESTOS DOCUMENTATION FROM WATTS ARCHITECTURE & ENGINEERING, INC.

(WILL BE PROVIDED UPON COMPLETION)

NEW YORK STATE
DEPARTMENT OF TRANSPORTATION
D031085 P.I.N 3501.60

LEVEL 1 LOAD RATING
B.I.N. 1031610
HIAWATHA BOULEVARD OVER I-81

LOAD RATING SUMMARY TABLE (LOAD FACTOR)					
CONTROLLING MEMBER	CONTROLLING PARAMETER	LIVE LOAD	LIVE LOAD TYPE	INVENTORY RATING	OPERATING RATING
(G9) INTERIOR GIRDER	DESIGN FLEXURE	HS20-44	LANE + PEDESTRIAN	HS 23.5 (42.2 TONS)	HS 39.2 (70.6 TONS)

DOES NOT INCLUDE FUTURE WEARING COURSE

ANALYSIS METHOD:LOAD FACTOR

RECOMMENDED POSTING AS-IS CONDITION: _____ Tons __X__ None

CALCULATED BY:

STATE OF NEW YORK JEFFREY M. REINA No. 081990 LICENSED PROFESSIONAL ENGINEER

DATE: 2-26-2014

QUALITY ASSURANCE BY:

STATE OF NEW YORK CHARLES F. STANTON IV 077396 LICENSED PROFESSIONAL ENGINEER

DATE: 2-26-2014

C&S COMPANIES

499 Col. Eileen Collins Blvd.
Syracuse, NY 13212
phone 315-455-2000
fax 315-455-9667
www.cscos.com

ENGINEERS
DESIGN BUILD
TECHNICAL RESOURCES
OPERATIONS

C&S Companies

C&S Engineers, Inc.
Syracuse Hancock International Airport
Syracuse, NY 13212
phone 315-455-2000
fax 315-455-9667
www.cscos.com

TECHNICAL MEMORANDUM

TO: FILE (190.514.001)

FROM: JESSICA S. BAUER, P.E
NYSPE 084915

DATE: FEBRUARY 10, 2014

C&S PROJECT NO.: 190.514.001

RE: SEISMIC ASSESSMENT SUMMARY
NEW YORK STATE DEPARTMENT OF TRANSPORTATION
D031085; PIN 3501.60; I-81

BIN: 1031610 Seismic Assessment

This memorandum summarizes the seismic assessment conducted for BIN 1031610 as part of the Interstate 81 Project in Syracuse, NY. The purpose of the assessment is to determine if seismic retrofits are warranted at the superstructure to substructure connection, and if further seismic evaluation of the structure is required. This memorandum will give the assessment results, retrofits required and recommendations for further seismic evaluation of the structure.

ASSESSMENT PROCEDURE

The seismic assessment was performed in accordance with the FHWA Seismic Retrofitting Manual for Highway Structures: Part 1 - Bridges, January 2006. As per the referenced manual, seismic assessment was performed for both lower level and upper level earthquake ground motion. The lower level earthquake ground motion has a reasonable likelihood of occurrence within the life of the bridge (50% probability of exceedance within a 75 year bridge life). The upper level earthquake ground motion has a finite likelihood of occurrence within the life of the bridge (7% probability of exceedance within a 75 year bridge life).

Values for the spectral acceleration for the Syracuse area used in the assessment are as follows:

- Lower Level Earthquake Ground Motion for a Short Period (0.2 seconds): $S_S = 0.0251$
- Lower Level Earthquake Ground Motion for a Long Period (1.0 seconds): $S_1 = 0.0076$
- Upper Level Earthquake Ground Motion for a Short Period (0.2 seconds): $S_S = 0.139$
- Upper Level Earthquake Ground Motion for a Long Period (1.0 seconds): $S_1 = 0.047$

These values are considered constant and are the same for all seismic assessments of bridges in the Syracuse area.

The Site Class is based on the soil conditions at the bridge location. It was determined that this parameter has little effect on the results of the seismic assessment because the spectral

You created this PDF from an application that is not licensed to print to novaPDF printer (http://www.novapdf.com)

acceleration values for the Syracuse area are small. Based on this, a site class of D was used for all seismic assessments of bridges in the Syracuse area.

Bridge parameters used in the seismic assessment were retrieved from the record drawings and WinBolts data.

The seismic assessment takes into account the anticipated service life, importance, and the seismic exposure of the bridge to determine a seismic retrofit category (SRC). The SRC is then used to determine seismic evaluation methods and retrofit measures. There are four SRCs, A through D. Seismic retrofit category A is the lowest category; bridges in this category do not require retrofits or further seismic evaluation. Seismic retrofit category D is the highest category; bridges in this category requiring the most rigorous seismic evaluations and retrofits.

ASSESSMENT RESULTS

The SRC for the bridge is "**C**" for lower level earthquake ground motion and "**B**" for upper level earthquake ground motion.

RETROFITS REQUIRED

Bearing replacements and seat width improvements are not required at the abutments or piers. Additional retrofits may be required if further seismic evaluation is needed.

RECOMMENDATIONS FOR FURTHER SEISMIC EVALUATION

For the lower level earthquake ground motion, it is recommended that capacity/demand ratios for bridge components are calculated as per Section 5.4 of the referenced manual. For the upper level earthquake ground motion, it is recommended that the capacities of the bearings are checked as per Section 5.2 of the referenced manual.

Retrofit cost estimates will be provided after any further required seismic evaluations are completed.

You created this PDF from an application that is not licensed to print to novaPDF printer (http://www.novapdf.com)

E. Recommendations

The purpose of this deck evaluation is to document and determine existing conditions of the deck. It will be used as a tool for developing scope of work and cost estimates for the development and comparison of alternatives for the overall project.

The total damaged area is approximately 10% of the total deck area. Due to the age, condition and high chloride-ion content of the bridge deck concrete, the bridge deck should be rehabilitated or replaced to meet current standards and to mitigate excessive future maintenance costs.

Option 1 – Scarify and Bridge Deck Overlay

The maximum service life this option would provide is 25 years. The design life of this project is 30 years (ETC +30). This option does not meet the project objectives of obtaining 30+ years of service life.

Option 2 – Bridge Deck Rehabilitation with 100% Deep Removal

This option will involve partial depth reconstruction with top mat rebar exposure of the entire bridge deck to remove chloride contaminated concrete (100% deep removal). The existing bridge deck thickness is 8 ½” with 2 ½” of concrete cover over the top mat of reinforcing. The proposed partial depth reconstruction will include the addition of 1” of concrete to provide the standard 9 ½” bridge deck thickness. The existing top mat of reinforcing bars will be removed and replaced to accommodate the standard 3” of concrete cover. The existing vertical-faced concrete parapet and sidewalk will be removed and replaced. The existing approach slabs will receive the same repair treatment as the deck. The existing deteriorated bridge joints will be replaced with armorless bridge joints. The Level 1 Load Rating for the final condition was found to be acceptable. Option 2 would provide a service life of 35 years to the bridge deck. The construction cost of this option is $3.50 million.

Option 3 – Bridge Deck Replacement with Cast-In-Place Concrete

This option will involve the complete demolition of the existing bridge deck, sidewalk, vertical-faced concrete parapet, bridge deck joints and approach slabs. The bridge deck will be replaced with new sidewalks, vertical-faced concrete parapets and new armorless bridge joints. The approach slabs will also be replaced under Option 3. The new bridge deck would be 9 ½" standard thickness as compared to the 8 ½" existing thickness. The Level 1 Load Rating for the final condition was found to be acceptable. Option 3 would provide a service life of 40 years to the bridge deck. The construction cost of Option 3 is $3.95 million.

Option 4 – Bridge Deck Replacement with Pre-cast Concrete Deck Panels

This option will have the highest construction cost of all of the options however; traffic control costs may be lower due to reduced construction time. Comparison of accelerated construction to conventional construction is beyond the scope of work for this project at this time.

IN-DEPTH INSPECTION REPORT

D031085 P.I.N. 3501.60

B.I.N. 1031711

TEAM LEADER Andrew J. Fuller, P.E. 59848
NYSPE LICENSE #

ASSISTANT TEAM LEADER Jeffrey M. Reina, P.E.
ASSISTANT TEAM LEADER Logan Bessel
ASSISTANT TEAM LEADER Jerome Getter

FEATURE CARRIED I - 481 Southbound
FEATURE CROSSED I - 81

DATE FIELD WORK BEGAN December 2, 2013
DATE FIELD WORK COMPLETED December 4, 2013

TABLE OF CONTENTS

- TP 349 & 350
- IN-DEPTH CONDITION DOCUMENTATION
- IN-DEPTH PHOTO DOCUMENTATION
- ASBESTOS REPORT

TP 349 & TP 350

BRIDGE ELEMENT RATINGS

Inspection Date: 9/5/2012 RC: 33 BIN: 1031711

Bridge Ratings

Carried: 481I 481I33031000 Crossed: 81I 81I33033056 CheckValue: 1,806,493,295

Inspection Agency: 10 - NYSDOT Type of Inspection: 1 - BIENNIAL
GTMS: B02 -- Unpainted Steel Continuous - Stringer/Multi-Beam or Girder
POSTINGS: See Gen Rec Page 1 for Postings at time of inspection.
Further Investigation Needed: No
State Highway Number: 70-7 Milepoint: 14.98 AADT/Yr: 31000 / 2004
Orientation: 7 - West Political Unit: 0161 - Town of CICERO Year Built: 1986
Total Spans: 2 Ramp Bridge Attached To Span: NA BIN: NA
General Recommendation: 6 Computed Condition Rating: 5.028

Abutment Ratings:	**Beg Abut**	**End Abut**
Joint with Deck	3	5
Bearings, Bolts, Pads	5	5
Seats and Pedestals	4	4
Backwall	5	5
Stem (Breastwall)	5	5
Erosion or Scour	6	6
Footings	9	9
Piles	9	9
Recommendation	5	5

Wingwall Ratings:	**Beg Abut**	**End Abut**
Walls	4	6
Footings	9	9
Erosion or Scour	6	6
Piles	9	9

Channel Ratings:	**Channel**
Stream Alignment	8
Erosion and Scour	8
Waterway Opening	8
Bank Protection	8

Approach Ratings:	**Approaches**
Drainage	6
Embankment	6
Settlement	5
Erosion	5
Pavement	5
Guide Railing	5

Number of Flags Issued:

RED: 0 Yellow: 0 Safety: 0

Vulnerability Reviews Recommended: 1=Yes, 2=No, 3=NA, X=NotActive

Hydraulic: 3	Overload: X	Steel: 2
Collision: 2	Concrete: X	Seismic: X

Inspector's Signature: CheckValue: 1,806,493,295 Date: 9/5/2012

Bruce Opalka,PE () (Inspector ID:3000038)

Signed copy of this inspection report is available in the appropriate NYSDOT Regional Office

Reviewed By: Date: 10/19/2012

James R. Manning,PE () (QC ID:3000023)

Signed copy of this inspection report is available in the appropriate NYSDOT Regional Office

Inspection Date: 9/5/2012 RC: 33 BIN: 1031711

Span Ratings

Carried: 481I 481I33031000 Crossed: 81I 81I33033056 CheckValue: 1,806,493,295

Deck Element Ratings:	001	002
Wearing Surface	6	6
Curbs	6	6
Sidewalks, Fascias	6	4
Railings, Parapets	6	6
Scuppers	8	8
Gratings	8	8
Median	8	8
Mono Deck Surface	5	5

Superstructure Ratings:	001	002
Structural Deck	6	6
Primary Members	6	6
Secondary Members	6	5
Paint	4	4
Joints	8	8
Recommendation	6	6

Pier Ratings:	001	002
Bearings, Bolts, Pads	6	8
Pedestals	6	8
Top of Cap or Beam	6	8
Stem Solid Pier	8	8
Cap Beam	6	8
Pier Columns	5	8
Footings	9	8
Erosion or Scour	6	8
Piles	9	8
Recommendation	5	8

Utility Ratings:	001	002
Lighting	8	8
Sign Structure	8	8
Utilities and Support	8	8

Field Notes:

Field Date	Arrival	Departure	Temp (C)	Temp (F)	Weather Conditions
8/31/2012	10:00:00 AM	12:00:00 PM	27	80	sunny
9/5/2012	1:00:00 PM	2:00:00 PM	24	75	Sunny

IN-DEPTH CONDITION DOCUMENTATION

IN DEPTH INSPECTION REPORT

BIN 1031711

Visual Inspection

Miscellaneous concrete repairs were made to the abutments and approach slabs in 2002 under contract D259214. Deck joints were also replaced under this contract.

Cracks, spalls, and other field observations are shown on the plans. Below is a brief summary of conditions for each feature.

Superstructure

Deck – See Bridge Deck Evaluation Report

Steel – See Structural Steel Inspection Summary

Bearings – Bearing elements typically have minor rust scale.

Substructure

East Abutment – Concrete back wall contained minor isolated areas of delaminated concrete and cracking. The stem contained cracks, spalls, and delaminated concrete. Pedestal locations 2, 3, 5, and 6 all exhibited minor cracking; the pedestal and stem concrete did not appear to be delaminated.

Pier – The east face of the concrete cap beam and the north and center columns contained areas of delaminated concrete and cracking. Pedestal 6 exhibited minor cracking and spall.

West Abutment – Concrete back wall and stem contained minor areas of delaminated concrete and cracking throughout the wall. Pedestal locations 1, 2, and 3 all exhibited minor cracking. Pedestal 6 contained delaminated concrete on the southwest edge.

STRUCTURAL STEEL INSPECTION SUMMARY

BIN 1031711

Special Emphasis Inspection Required

Non-Redundant/Fracture Critical Members – No

Pin and Hangers – No

Fatigue-Prone Welds – No

Non-Categorized Fatigue-Prone Details – No

Other (Specified in Text) – No

Special Emphasis Details

No Special emphasis details.

Overall Steel Condition

The steel showed no sign of major deterioration. There were no isolated pockets of major section loss and no areas of concern were observed. There was a uniform patina on the entire steel structure, indicating the weathering seal was performing as intended.

Paint

The bridge contained weathering steel, there was no paint.

Section Loss

Due to the age of the steel a blanket 5% section loss should be used in load rating.

D250416

FED. RD. REG. NO.	STATE	FEDERAL AID PROJECT NO.	SHEET NO.	TOTAL SHEETS
	NEW YORK	I-481-2(154) IR-81-2(164)	342	380

INTERSTATE RTE. 570 EXTENSION(I-481)
NORTHERN BLVD. TO BEAR ROAD INTERCHANGE
ONONDAGA COUNTY

CAPITAL PROJECT IDENTIFICATION NO. 3107.00 (01)

CONCRETE & REINFORCEMENT TABLE			
POUR	ITEM 555.01	ITEM 15555.04	ITEM 556.0202
SLAB	——	13,630 S.F.	——
SO. OVERLAY	5.04 C.Y.	——	572 Lb's.
NO. OVERLAY	5.04 C.Y.	——	572 Lb's.

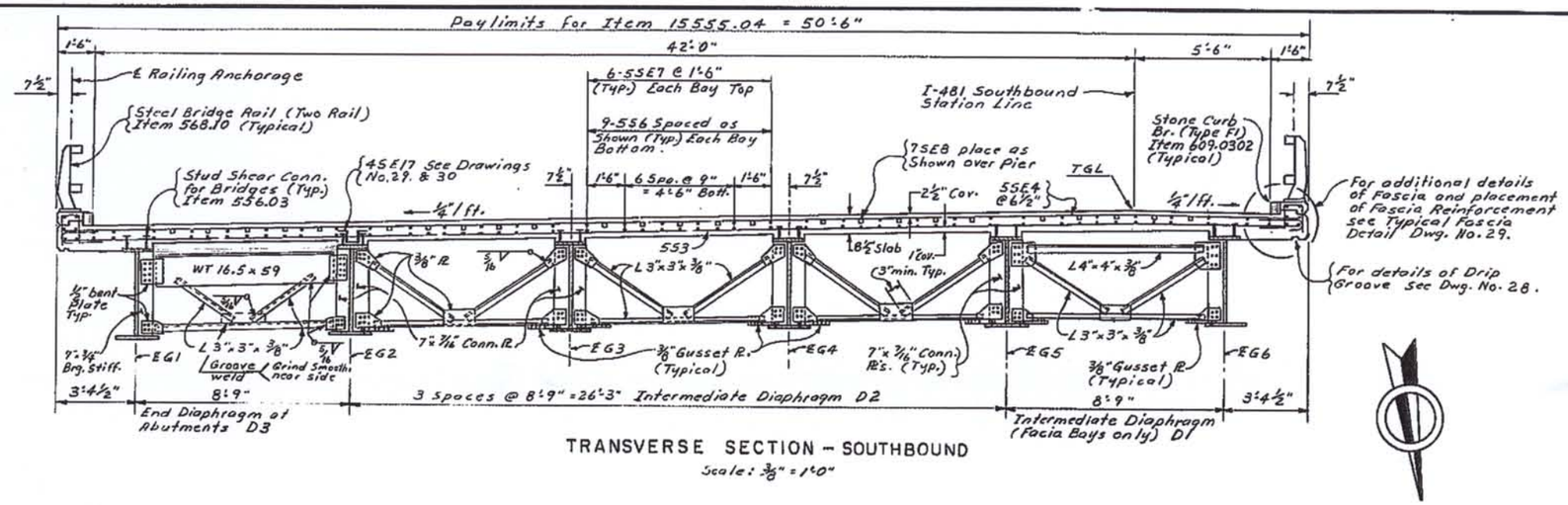

TRANSVERSE SECTION – SOUTHBOUND
Scale: ⅜" = 1'-0"

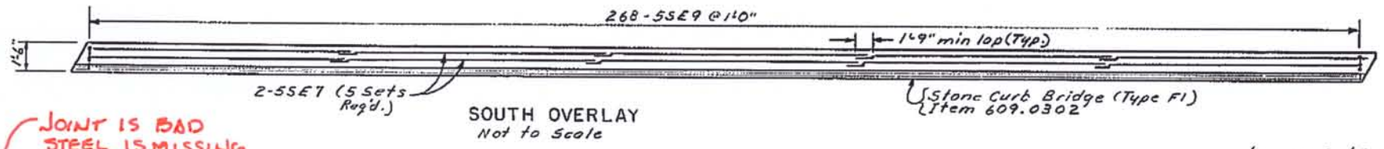

SOUTH OVERLAY
Not to Scale

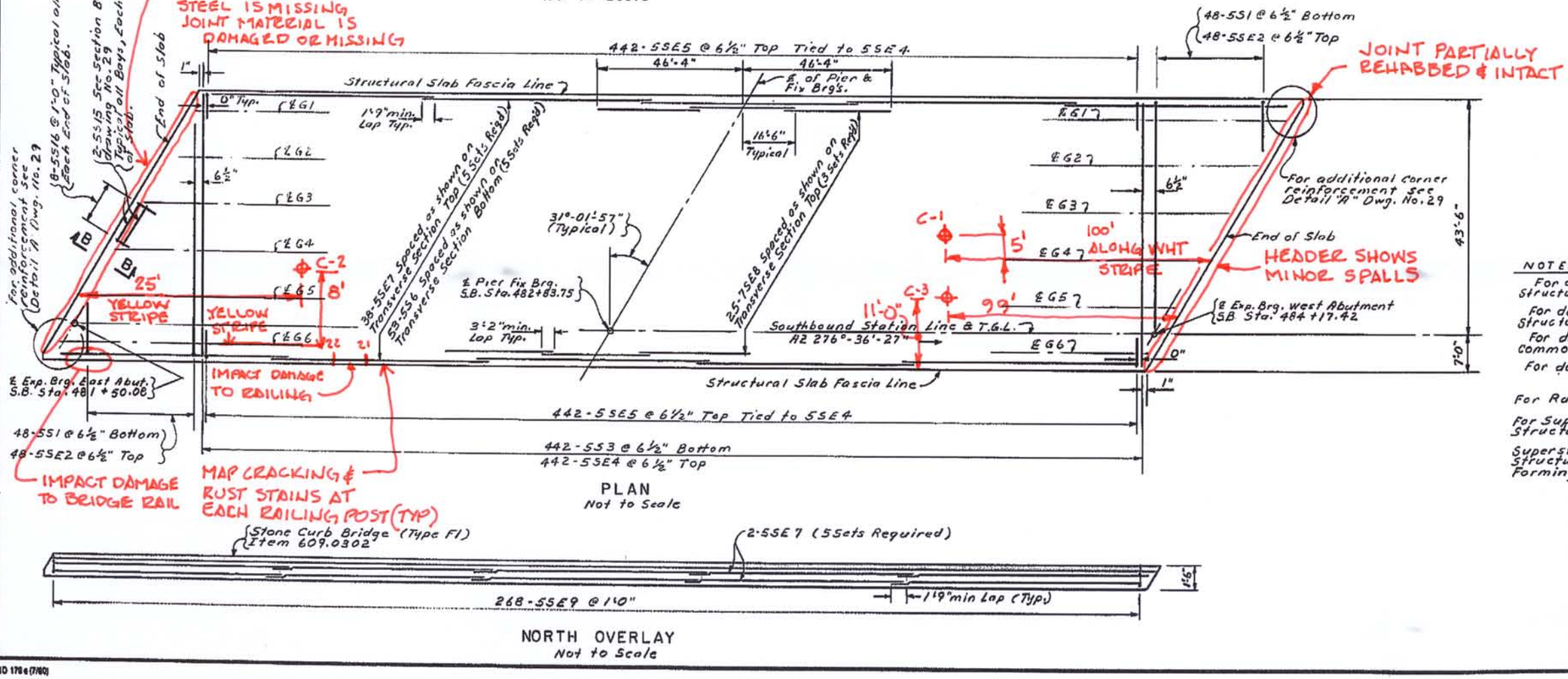

PLAN
Not to Scale

NORTH OVERLAY
Not to Scale

LEGEND

- C-X — CORE LOCATION
- XX — PHOTO LOCATION
- DELAMINATION
- SPALLING
- CRACK
- MAP CRACKING
- MOISTURE

NOTES:

For details of Stone Curb see Common Structure Details Drawing No. 6.

For details of Steel Bridge Railing see Common Structure Details Drawing No. 7.

For details of Stud Shear Connectors see Common Structure Details Drawing No. 5

For details of Section B-B see Drawing No. 29.

For Railing Layout see Drawing No 39.

For Superstructure Notes see Common Structure Details Drawing No. 1.

Superstructure Slab Item 15555.04 Structural Slab Concrete (Optional Forming System).

STATE OF NEW YORK
DEPARTMENT OF TRANSPORTATION
STRUCTURES DESIGN AND CONSTRUCTION DIVISION

BR 12 NORTHBOUND AND BR 13 SOUTHBOUND OVER I81-NL

SUPERSTRUCTURE (1 OF 7)

PROJ. ENG. [signature] DATE MADE
SQUAD [signature] DRAWING NO. 29 OF 49

DESIGNED BY G.A. Pond DETAILED BY [illegible] DESIGN CHECKED BY [illegible] DETAIL CHECKED BY [illegible]

SD 176e (7/80)

D250416

FED. RD. REG. NO.	STATE	FEDERAL AID PROJECT NO.	SHEET NO.	TOTAL SHEETS
	NEW YORK	I-481-2(154) IR-81-2(154)	355	380

INTERSTATE RTE. 570 EXTENSION (I-481)
NORTHERN BLVD. TO BEAR ROAD INTERCHANGE
ONONDAGA COUNTY

CAPITAL PROJECT IDENTIFICATION NO. 3107.00(01)

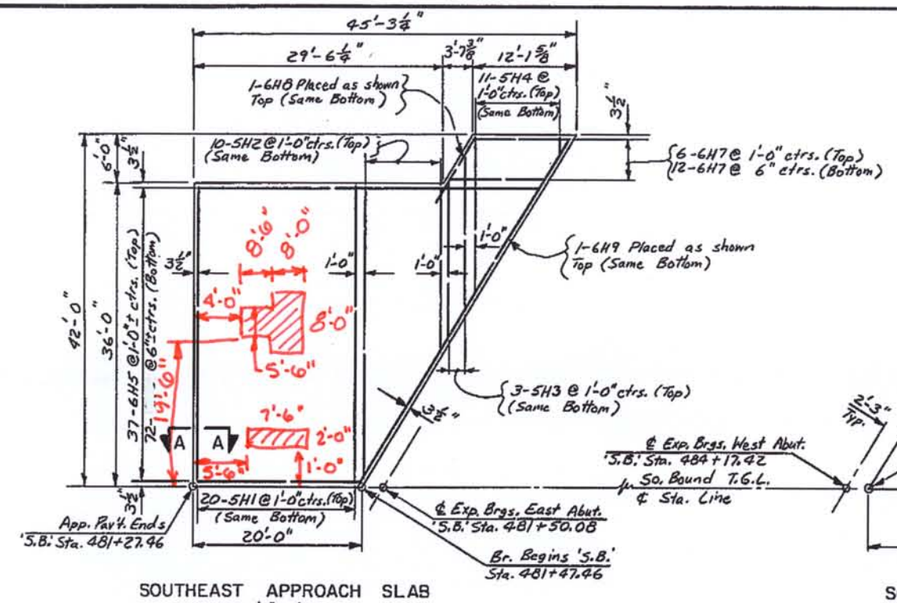

SOUTHEAST APPROACH SLAB
Scale: ⅛" = 1'-0"

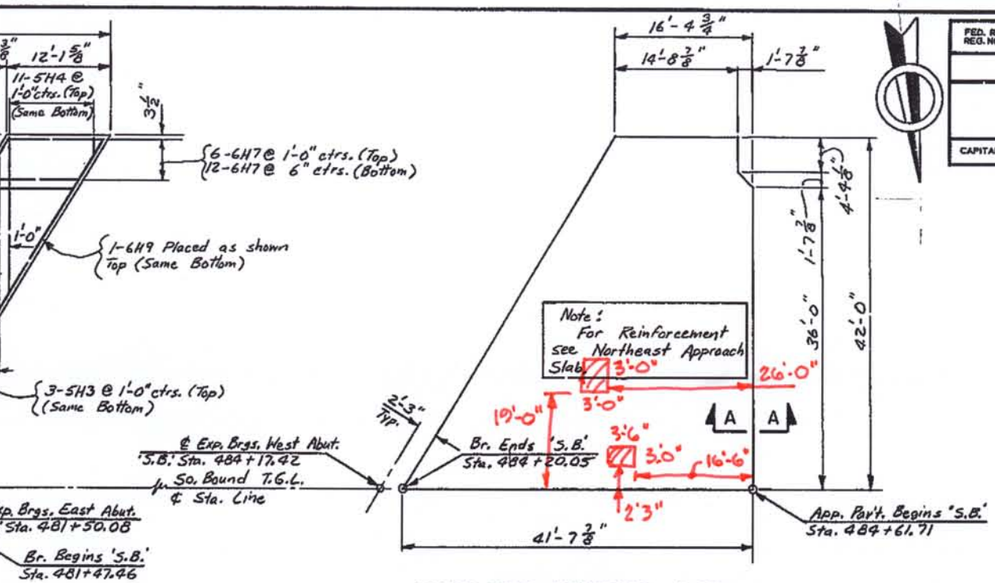

SOUTHWEST APPROACH SLAB
Scale: ⅛" = 1'-0"

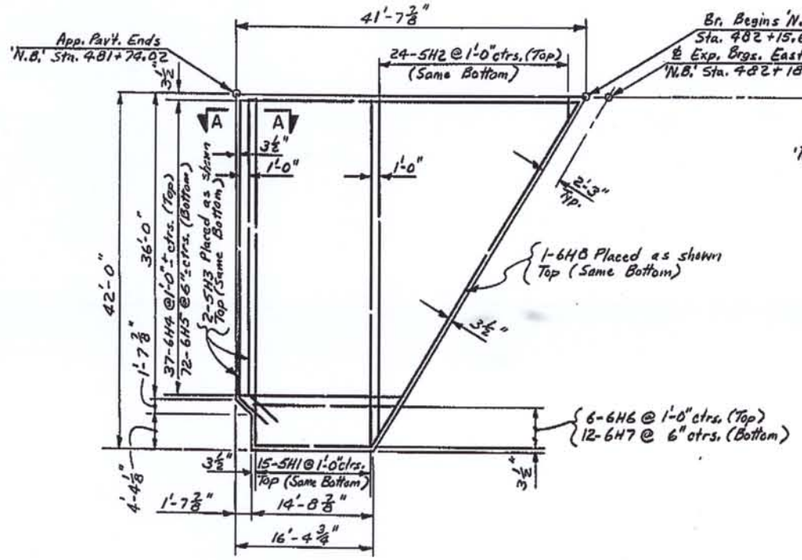

NORTHEAST APPROACH SLAB
Scale: ⅛" = 1'-0"

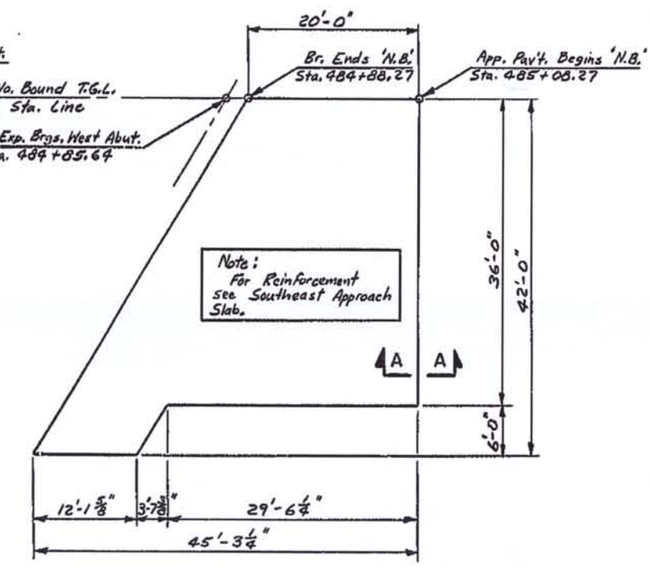

NORTHWEST APPROACH SLAB
Scale: ⅛" = 1'-0"

LEGEND

- C-X — CORE LOCATION
- XX — PHOTO LOCATION
- DELAMINATION
- SPALLING
- CRACK
- MAP CRACKING
- MOISTURE

LOCATION	ITEM 555.0404		ITEM 556.0201	
SOUTHEAST APPR. SLAB	1183	S.F.	7853	LBS.
SOUTHWEST APPR. SLAB	1211	S.F.	8108	LBS.
NORTHEAST APPR. SLAB	1211	S.F.	8108	LBS.
NORTHWEST APPR. SLAB	1183	S.F.	7853	LBS.

STATE OF NEW YORK
DEPARTMENT OF TRANSPORTATION
STRUCTURES DESIGN AND CONSTRUCTION DIVISION

BR 12 NORTHBOUND AND BR 13 SOUTHBOUND OVER I81-NL

APPROACH SLABS

PROJ. ENG. E. Bowman — DATE MADE
SQUAD J.E. Schmidt Jr. — DRAWING NO. 40 OF 49

DESIGNED BY J.E. Schmidt Jr. — DESIGN CHECKED BY M.A. Pinto — DETAILED BY B. Warster — DETAIL CHECKED BY J.E. Schmidt Jr.

BD 179a (7/80)

D250416

FED. RD. REG. NO.	STATE	FEDERAL AID PROJECT NO.	SHEET NO.	TOTAL SHEETS
	NEW YORK	I-481-2(154) IR-81-2(54)	322R1	380

INTERSTATE RTE. 570 EXTENSION (I-481)
NORTHERN BLVD. TO BEAR ROAD INTERCHANGE
ONONDAGA COUNTY

CAPITAL PROJECT IDENTIFICATION NO. 3107.00 (01)

LEGEND
- C-X — CORE LOCATION
- XX — PHOTO LOCATION
- DELAMINATION
- SPALLING
- CRACK
- MAP CRACKING
- MOISTURE

PLAN
Scale 3/8"=1'-0"

ELEVATION
Scale 3/8"=1'-0"

DETAIL "D"
No Scale

NOTE:
Assumed Pile Lengths of Existing Piles is 70 feet and the maximum allowable load per pile is 56 Tons.

* Existing dimensions and Elevations to be Verified in the Field.

Existing Piles not shown

CONCRETE & REINFORCEMENT TABLE

LOCATION	ITEM 555.01	ITEM 555.02	ITEM 556.0201	ITEM 556.0202
POUR 1	—	16.79 C.Y.	935 Lbs.	—
POUR 2	—	13.93 C.Y.	996 Lbs.	—
POUR 3	—	9.80 C.Y.	656 Lbs.	—
POUR 4	—	17.66 C.Y.	858 Lbs.	—
POUR 5	—	5.50 C.Y.	386 Lbs.	23 Lbs.

LOCATION	ITEM 555.01	ITEM 555.02	ITEM 556.0201	ITEM 556.0202
POUR 6	—	7.70 C.Y.	478 Lbs.	72 Lbs.
POUR 7	—	6.02 C.Y.	372 Lbs.	57 Lbs.
POUR 8	—	5.57 C.Y.	342 Lbs.	23 Lbs.
POUR 9	0.48 C.Y.	—	—	48 Lbs.
POUR 10	0.30 C.Y.	—	—	28 Lbs.
POUR 11	1.08 C.Y.	—	61 Lbs.	65 Lbs.
POUR 12	0.92 C.Y.	—	—	—

As Built Revisions
1. Joint Modified

STATE OF NEW YORK
DEPARTMENT OF TRANSPORTATION
STRUCTURES DESIGN AND CONSTRUCTION DIVISION

BR 12 NORTHBOUND AND BR 13 SOUTHBOUND OVER I81-ML

EAST ABUTMENT SOUTHBOUND (1 OF 4)

DRAWING NO. 7 OF 49

DESIGNED BY: A. Paris
DETAILED BY: Antonio Tedesco
DETAIL CHECKED BY: Antonio Tedesco
DESIGN CHECKED BY: A.E. Sabatini Jr.

D250416

FED. RD. REG. NO.	STATE	FEDERAL AID PROJECT NO.	SHEET NO.	TOTAL SHEETS
	NEW YORK	I-481-2(154) IR-81-2(154)	330	380

INTERSTATE RTE. 570 EXTENSION (I-481)
NORTHERN BLVD. TO BEAR ROAD INTERCHANGE
ONONDAGA COUNTY

CAPITAL PROJECT IDENTIFICATION NO. 3107.00(01)

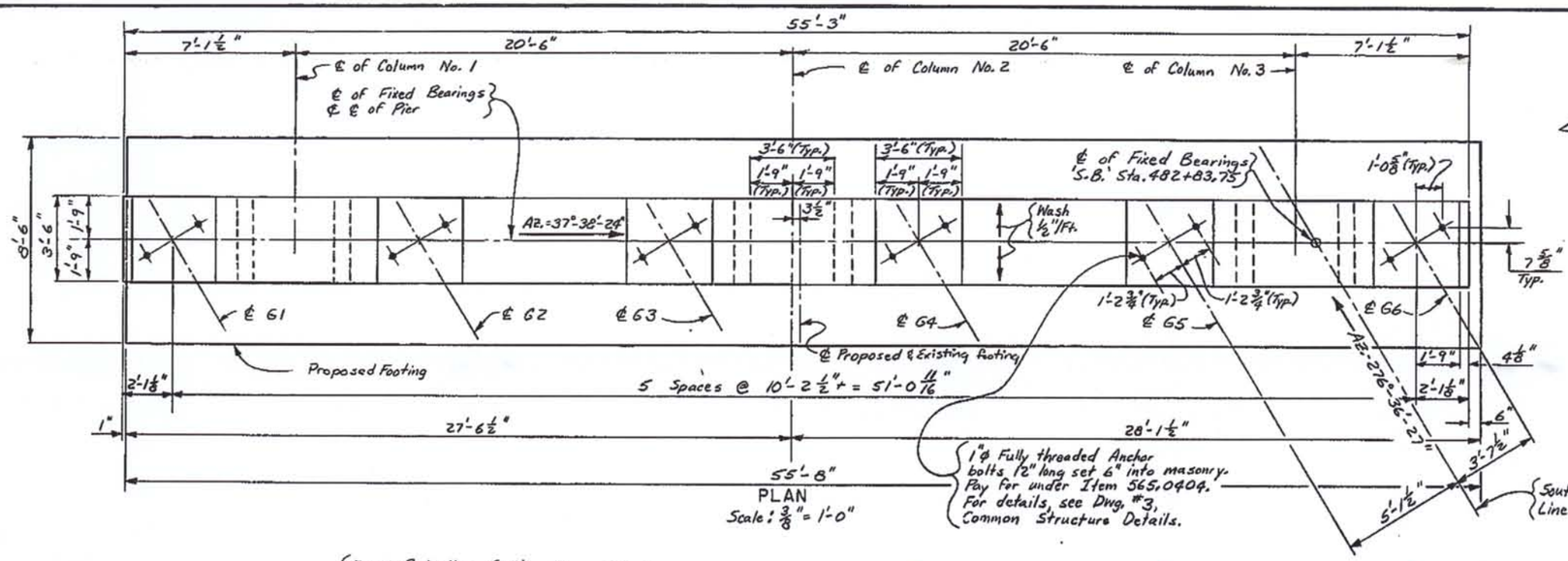

Note:
Cast-in-Place Piles Item 551.07 & existing C.I.P Piles are not shown. For pile layout see Dwg. No. 16.

SOUTHBOUND PIER			
LOCATION	CONCRETE		REINFORCEMENT
	ITEM 555.01	ITEM 555.02	ITEM 555.0201
POUR 1	——	78.86 C.Y.	10,586 Lb.
POUR 2	7.10 C.Y.	——	1,513 Lb.
POUR 3	7.30 C.Y.	——	1,513 Lb.
POUR 4	7.52 C.Y.	——	1,513 Lb.
POUR 5	35.07 C.Y.	——	7,976 Lb.
POUR 6	1.69 C.Y.	——	86 Lb.

LEGEND

- CORE LOCATION
- PHOTO LOCATION
- DELAMINATION
- SPALLING
- CRACK
- MAP CRACKING
- MOISTURE

WEST FACE

EAST FACE

NO DISTRESS NOTED

Note: For Reinforcement Details see Dwg. No. 16.

STATE OF NEW YORK
DEPARTMENT OF TRANSPORTATION
STRUCTURES DESIGN AND CONSTRUCTION DIVISION

BR 12 NORTHBOUND AND BR 13 SOUTHBOUND OVER 181-ML

PIER SOUTHBOUND (1 OF 2)

PROJ. ENG. [signature] DATE MADE
SQUAD [signature] DRAWING NO. 15 OF 49

DESIGNED BY [signature] DESIGN CHECKED BY [signature] DETAILED BY B. Wurster DETAIL CHECKED BY [signature]

BD 178e (7/80)

D250416

FED. RD. REG. NO.	STATE	FEDERAL AID PROJECT NO.	SHEET NO.	TOTAL SHEETS
	NEW YORK	IR-81-2(154)	334	380

INTERSTATE RTE. 570 EXTENSION (I-481)
NORTHERN BLVD. TO BEAR ROAD INTERCHANGE
ONONDAGA COUNTY

CAPITAL PROJECT IDENTIFICATION NO. 3107.00(01)

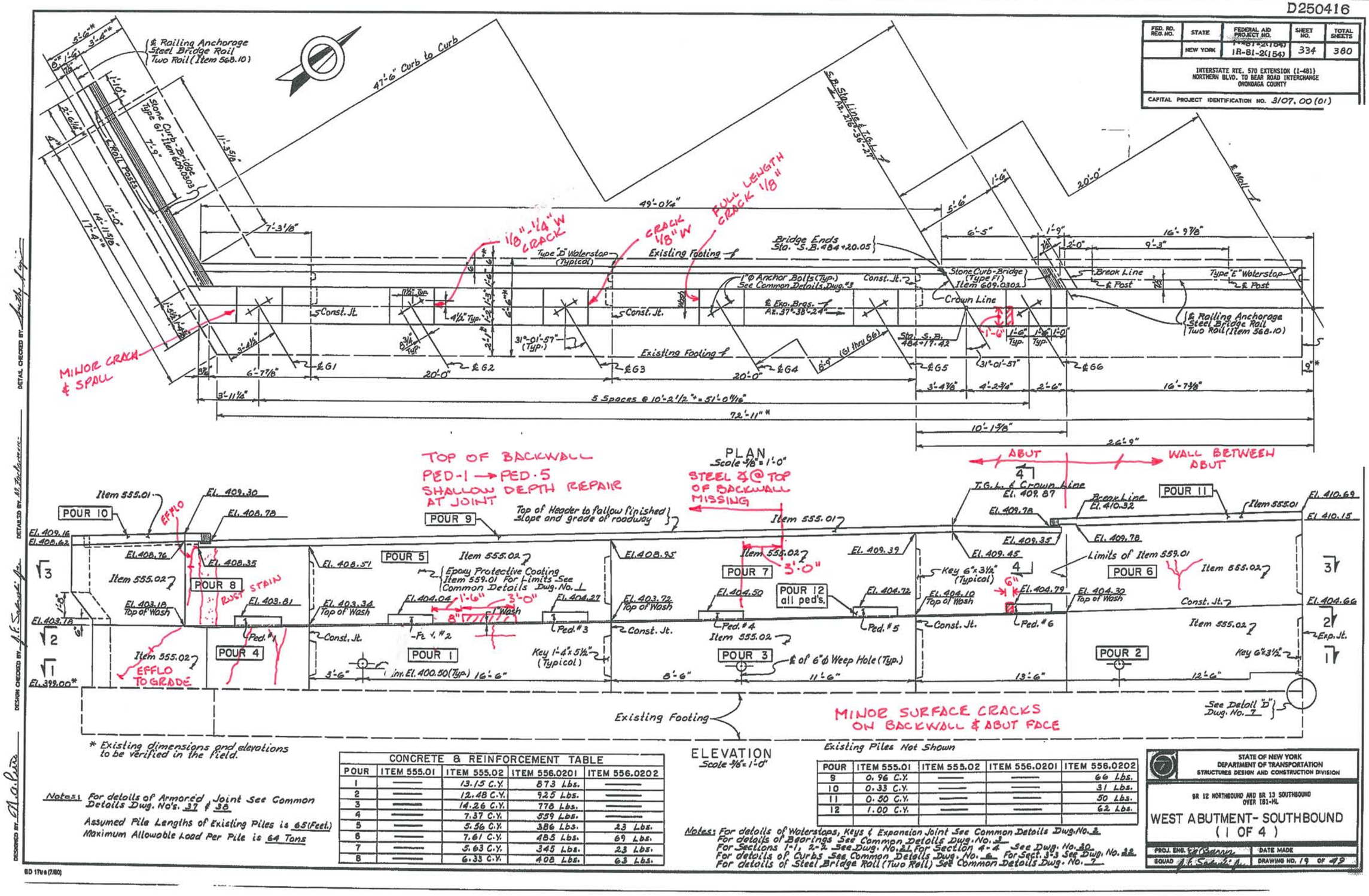

* Existing dimensions and elevations to be verified in the field.

ELEVATION
Scale 1/8" = 1'-0"

CONCRETE & REINFORCEMENT TABLE				
POUR	ITEM 555.01	ITEM 555.02	ITEM 556.0201	ITEM 556.0202
1	——	13.15 C.Y.	873 Lbs.	——
2	——	12.48 C.Y.	925 Lbs.	——
3	——	14.26 C.Y.	778 Lbs.	——
4	——	7.37 C.Y.	559 Lbs.	——
5	——	5.56 C.Y.	386 Lbs.	23 Lbs.
6	——	7.61 C.Y.	485 Lbs.	69 Lbs.
7	——	5.63 C.Y.	345 Lbs.	23 Lbs.
8	——	6.33 C.Y.	408 Lbs.	63 Lbs.

Existing Piles Not Shown

POUR	ITEM 555.01	ITEM 555.02	ITEM 556.0201	ITEM 556.0202
9	0.96 C.Y.	——	——	66 Lbs.
10	0.33 C.Y.	——	——	31 Lbs.
11	0.50 C.Y.	——	——	50 Lbs.
12	1.00 C.Y.	——	——	62 Lbs.

Notes: For details of Armored Joint See Common Details Dwg. No's. 37 & 38

Assumed Pile Lengths of Existing Piles is 65 (Feet)
Maximum Allowable Load Per Pile is 64 Tons

Notes: For details of Waterstops, Keys & Expansion Joint See Common Details Dwg. No. 2
For details of Bearings See Common Details Dwg. No. 3
For Sections 1-1, 2-2 See Dwg. No. 21 For Section 4-4 See Dwg. No. 20
For details of Curbs See Common Details Dwg. No. 6 For Sect. 3-3 See Dwg. No. 22
For details of Steel Bridge Rail (Two Rail) See Common Details Dwg. No. 7

STATE OF NEW YORK
DEPARTMENT OF TRANSPORTATION
STRUCTURES DESIGN AND CONSTRUCTION DIVISION

BR 12 NORTHBOUND AND BR 13 SOUTHBOUND OVER 181-NL

WEST ABUTMENT - SOUTHBOUND (1 OF 4)

PROJ. ENG. T.P. Quinn — DATE MADE
SQUAD A.F. Salvati Jr. — DRAWING NO. 19 OF 49

DESIGNED BY A.A. Pitts
DESIGN CHECKED BY A.F. Salvati Jr.
DETAILED BY M. Tedeschi
DETAIL CHECKED BY Timothy Lee

BD 17re (7/80)

LOCATION
) LOCATION
MINATION
.ING
:
CRACKING
URE

D250416

FED. RD. REG. NO.	STATE	FEDERAL AID PROJECT NO.	SHEET NO.	TOTAL SHEETS
	NEW YORK	IR-81-2(154)	334	380

INTERSTATE RTE. 570 EXTENSION (I-481)
NORTHERN BLVD. TO BEAR ROAD INTERCHANGE
ONONDAGA COUNTY

CAPITAL PROJECT IDENTIFICATION NO. 3107.00(01)

DETAIL CHECKED BY: A.F. Salvati Jr.
DESIGN CHECKED BY: A.F. Salvati Jr.
DETAILED BY: M. Tedeschi
DESIGNED BY: A.A. Pitts

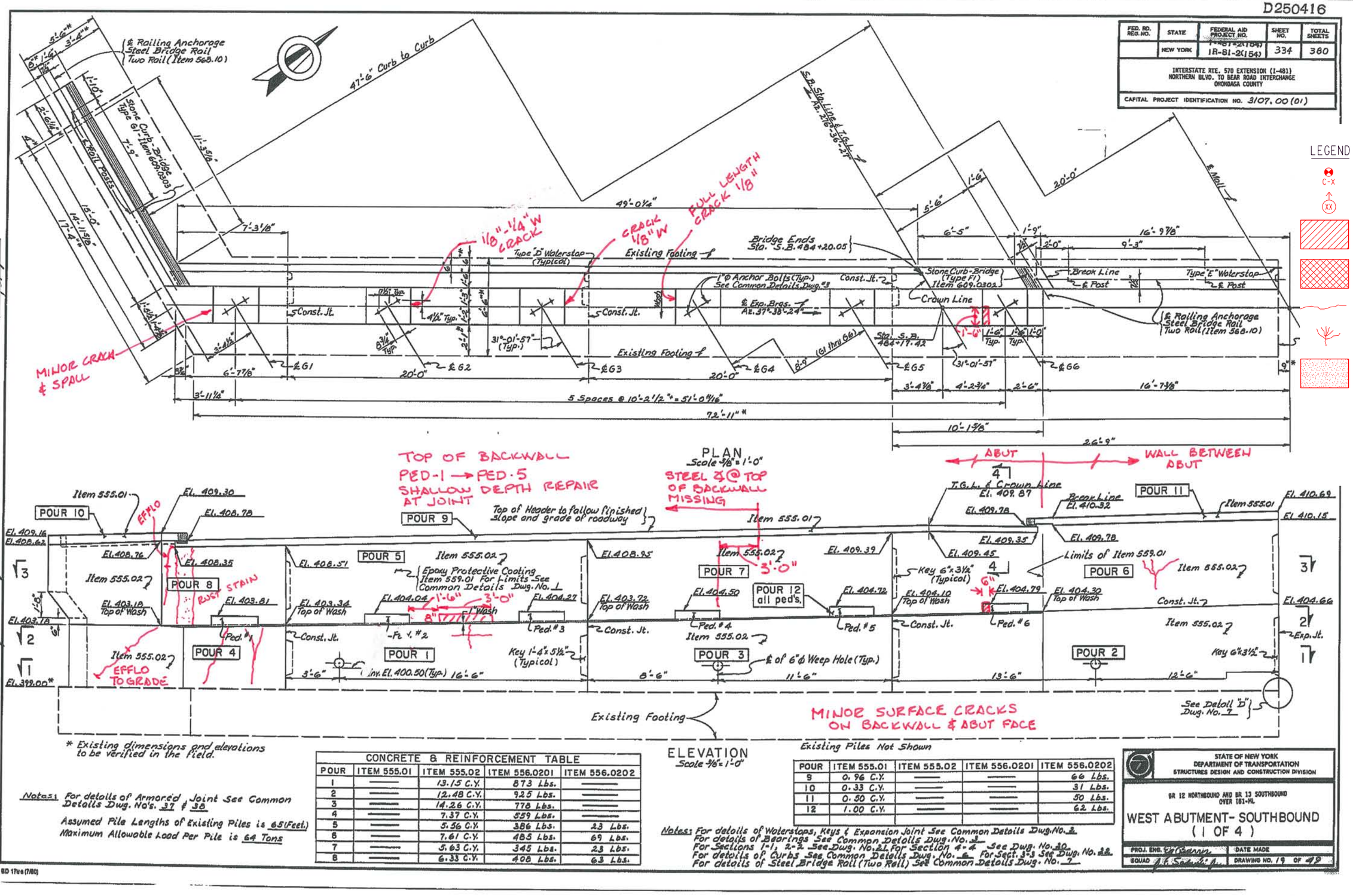

* Existing dimensions and elevations to be verified in the field.

ELEVATION
Scale 3/16" = 1'-0"

Existing Piles Not Shown

POUR	ITEM 555.01	ITEM 555.02	ITEM 556.0201	ITEM 556.0202
9	0.96 C.Y.	—	—	66 Lbs.
10	0.33 C.Y.	—	—	31 Lbs.
11	0.50 C.Y.	—	—	50 Lbs.
12	1.00 C.Y.	—	—	62 Lbs.

CONCRETE & REINFORCEMENT TABLE

POUR	ITEM 555.01	ITEM 555.02	ITEM 556.0201	ITEM 556.0202
1	—	13.15 C.Y.	873 Lbs.	—
2	—	12.48 C.Y.	925 Lbs.	—
3	—	14.26 C.Y.	778 Lbs.	—
4	—	7.37 C.Y.	559 Lbs.	—
5	—	5.56 C.Y.	386 Lbs.	23 Lbs.
6	—	7.61 C.Y.	485 Lbs.	69 Lbs.
7	—	5.63 C.Y.	345 Lbs.	23 Lbs.
8	—	6.33 C.Y.	408 Lbs.	63 Lbs.

Notes: For details of Armored Joint See Common Details Dwg. No's. 37 & 38

Assumed Pile Lengths of Existing Piles is 65 (Feet)
Maximum Allowable Load Per Pile is 64 Tons

Notes: For details of Waterstops, Keys & Expansion Joint See Common Details Dwg. No. 2
For details of Bearings See Common Details Dwg. No. 3
For Sections 1-1, 2-2 See Dwg. No. 21 For Section 4-4 See Dwg. No. 20
For details of Curbs See Common Details Dwg. No. 6 For Sect. 3-3 See Dwg. No. 22
For details of Steel Bridge Rail (Two Rail) See Common Details Dwg. No. 7

STATE OF NEW YORK
DEPARTMENT OF TRANSPORTATION
STRUCTURES DESIGN AND CONSTRUCTION DIVISION

BR 12 NORTHBOUND AND BR 13 SOUTHBOUND OVER 181-NL

WEST ABUTMENT - SOUTHBOUND (1 OF 4)

PROJ. ENG. T.P. Quinn	DATE MADE
SQUAD A.F. Salvati Jr.	DRAWING NO. 19 OF 49

GD 17re (7/80)

IN-DEPTH PHOTO DOCUMENTATION

C&S Engineers, Inc.
499 Col. Eileen Collins Blvd.
Syracuse, New York 13212
Phone: (315) 455-2000
Fax: (315) 455-9667
www.cscos.com

I-481 SB over I-81 - BIN 1031711



DESCRIPTION: EAST ABUTMENT – FACING EAST

PHOTO 1



DESCRIPTION: EAST ABUTMENT – SOUTHEAST WINGWALL – JOINT HEADER SPALL AND WINGWALL SPALL

PHOTO 2

C&S Engineers, Inc.
499 Col. Eileen Collins Blvd.
Syracuse, New York 13212
Phone: (315) 455-2000
Fax: (315) 455-9667
www.cscos.com

I-481 SB over I-81 - BIN 1031711



DESCRIPTION: EAST ABUTMENT – PEDESTAL 6 - LOOKING NORTH - BEARING ELEMENTS HAVE MINOR RUST SCALE – TYPICAL FOR BEARINGS 4 AND 5

PHOTO 3



DESCRIPTION: EAST ABUTMENT – PEDESTAL 2 – MODERATE RUST SCALE ON BEARING ELEMENTS – TYICAL FOR BEARINGS 1 AND 3

PHOTO 4

C&S Engineers, Inc.
499 Col. Eileen Collins Blvd.
Syracuse, New York 13212
Phone: (315) 455-2000
Fax: (315) 455-9667
www.cscos.com

I-481 SB over I-81 - BIN 1031711



DESCRIPTION: EAST ABUTMENT – PEDESTAL 3 - LOOKING EAST – MAP CRACKING- TYPICAL ON PEDESTALS 1, 2 & 3

PHOTO 5



DESCRIPTION: EAST ABUTMENT – STEM – LOOKING SOUTH EAST – MODERATE CRACKS, SPALLS AND DELAMINTATED CONCRETE

PHOTO 6

C&S Engineers, Inc.
499 Col. Eileen Collins Blvd.
Syracuse, New York 13212
Phone: (315) 455-2000
Fax: (315) 455-9667
www.cscos.com

I-481 SB over I-81 - BIN 1031711



DESCRIPTION: PIER 1 – CAP BEAM - LOOKING WEST – CONCRETE SOUND - TYPICAL

PHOTO 7



DESCRIPTION: PIER 1 - EAST SIDE – PEDESTAL 3 LOOKING WEST – MINOR RUST SCALE ON INTERIOR BEARING ELEMENTS - TYPICAL

PHOTO 8

C&S Engineers, Inc.
499 Col. Eileen Collins Blvd.
Syracuse, New York 13212
Phone: (315) 455-2000
Fax: (315) 455-9667
www.cscos.com

I-481 SB over I-81 - BIN 1031711



DESCRIPTION: PIER 1 – WEST FACE – PEDESTAL 6 – CRACK IN PEDESTAL, WEST FACE

PHOTO 9

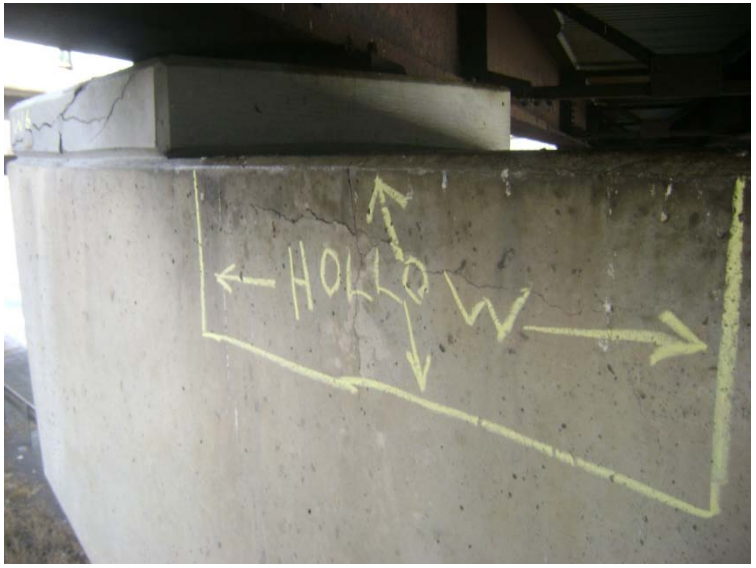

DESCRIPTION: PIER 1 – CAP BEAM – WEST FACE – LOOKING NORTHEAST – CRACKS AND DELAMINATED CONCRETE

PHOTO 10

C&S Engineers, Inc.
499 Col. Eileen Collins Blvd.
Syracuse, New York 13212
Phone: (315) 455-2000
Fax: (315) 455-9667
www.cscos.com

I-481 SB over I-81 - BIN 1031711

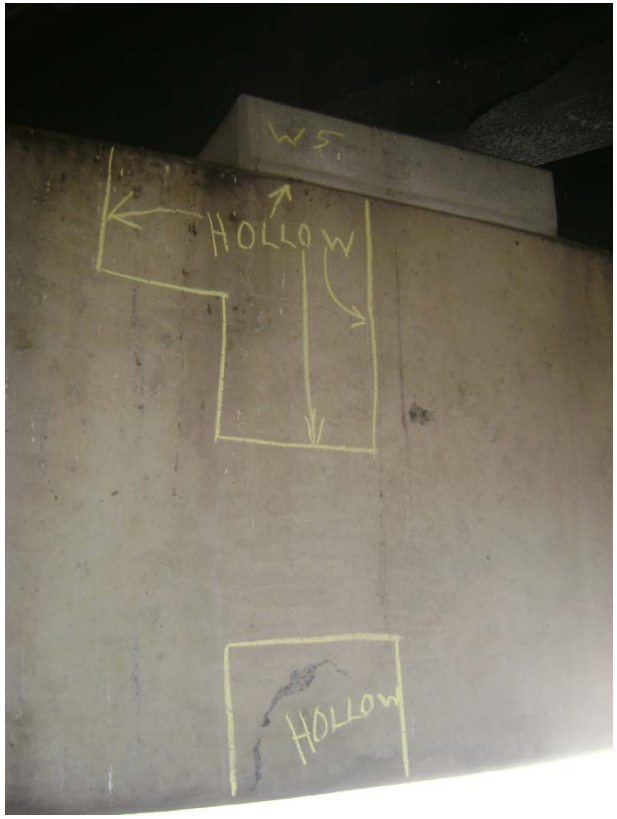

DESCRIPTION: PIER 1 – CAP BEAM – WEST FACE – PEDESTAL 5 – LOOKING EAST – DELAMINATED CONCRETE

PHOTO 11



DESCRIPTION: PIER 1 – WEST FACE – LOOKING EAST – MINOR DELAMINATED CONCRETE – TYPICAL

PHOTO 12

C&S Engineers, Inc.
499 Col. Eileen Collins Blvd.
Syracuse, New York 13212
Phone: (315) 455-2000
Fax: (315) 455-9667
www.cscos.com

I-481 SB over I-81 - BIN 1031711



DESCRIPTION: WEST ABUTMENT – BEARING 1 - LOOKING SOUTHWEST – MINOR RUST SCALE – TYPICAL

PHOTO 13



DESCRIPTION: WEST ABUTMENT – PEDESTAL 6 – PEDESTAL CRACK, MINOR MAP-CRACKING

PHOTO 14

C&S Engineers, Inc.
499 Col. Eileen Collins Blvd.
Syracuse, New York 13212
Phone: (315) 455-2000
Fax: (315) 455-9667
www.cscos.com

I-481 SB over I-81 - BIN 1031711



DESCRIPTION: WEST ABUTMENT STEM – LOOKING WEST – TYPICAL

PHOTO 15



DESCRIPTION: WEST ABUTMENT – LOOKING WEST – BACKWALL CONTAINS PATCHES OF DELAMINATED CONCRETE

PHOTO 16

C&S Engineers, Inc.
499 Col. Eileen Collins Blvd.
Syracuse, New York 13212
Phone: (315) 455-2000
Fax: (315) 455-9667
www.cscos.com

I-481 SB over I-81 - BIN 1031711



DESCRIPTION: SOUTHWEST WINGWALL - LOOKING NORTHWEST - TYPICAL

PHOTO 17



DESCRIPTION: SOUTHWEST WINGWALL - LOOKING NORTH – JOINT HEADER AND FASCIA SPALLED WITH EXPOSED REINFORCING

PHOTO 18

C&S Engineers, Inc.
499 Col. Eileen Collins Blvd.
Syracuse, New York 13212
Phone: (315) 455-2000
Fax: (315) 455-9667
www.cscos.com

I-481 SB over I-81 - BIN 1031711



DESCRIPTION: EAST EDGE OF PIER CAPBEAM – BAY 2 – LOOKING NORTHWEST - TYPICAL

PHOTO 19



DESCRIPTION: STEEL BEAM CONNECTION – TYPICAL

PHOTO 20

C&S Engineers, Inc.
499 Col. Eileen Collins Blvd.
Syracuse, New York 13212
Phone: (315) 455-2000
Fax: (315) 455-9667
www.cscos.com

I-481 SB over I-81 - BIN 1031711



DESCRIPTION: PIER – FACING NORTHEAST

PHOTO 21



DESCRIPTION: WEST ABUTMENT – FACING WEST

PHOTO 22

C&S Engineers, Inc.
499 Col. Eileen Collins Blvd.
Syracuse, New York 13212
Phone: (315) 455-2000
Fax: (315) 455-9667
www.cscos.com

I-481 SB over I-81 - BIN 1031711



DESCRIPTION: BRIDGE DECK – WEST END FACING EAST

PHOTO 23



DESCRIPTION: GENERAL ELEVATION – FACING NORTH

PHOTO 24

BIN 1031711
PHOTO LOCATION MAP

N

LEGEND

XX PHOTO LOCATION

XX HIDDEN PHOTO LOCATION

4-3.658m LANES = 14.630m

4-3.658m LANES = 14.630m

REPLACE EXISTING COMPRESSION SEAL

REPLACE EXISTING COMPRESSION SEAL

GRANITE CURB (TYP)

BIN 1031711
INTERSTATE 481 SOUTHBOUND

℄ FIXED BEARINGS AT PIER SB STA. 14+716.888 = I-81 4+632.801

℄ EXP BRGS SB STA 14+676.145

SB STA 14+700.000

SB T.G.L. & STA LINE AZ. 276°-36'-27"

℄ EXP BRGS SB STA 14+757.630

SB STA 14+750.000

6.096m APPR. SLAB

12.698m APPR SLAB

15.392 m OUT TO OUT

3-3.658 m LANES

31°-01'-57.0" SKEW TYP.

BRIDGE ENDS SB STA. 14+758.431

I-81 NORTHBOUND

I-81 SOUTHBOUND

NB STA 14+700.000

℄ EXP BRGS NB STA 14+696.938

℄ FIXED BEARINGS PIER NB STA. 14+737.681 = I-81 4+647.030

TO OUT

NB STA 14+750.000

NB T.G.L. & STA LINE AZ 276°-36'-27"

℄ EXP BRGS NB STA 14+778.424

31°-01'-57.0" SKEW TYP.

BRIDGE ENDS NB STA. 14+779.225

ASBESTOS DOCUMENTATION

ASBESTOS DOCUMENTATION FROM WATTS ARCHITECTURE & ENGINEERING, INC.

(WILL REPLACE BIN FOLDER ASBESTOS REPORT UPON COMPLETION)

Asbestos Sampling Survey

Location:

BIN 1031711
Interstate Route I-481 South Bound
over Interstate Route I-81

Prepared for:

New York State
Department of Transportation

PIN 3056.13.111

LaBella Project No. 201001

August 2001

Table of Contents

Page

I. Project Summary 1

II. Site Description 1

III. Inspection Procedures 1

IV. Results 2

Certification 2

Figures and Table

I. Project Summary

In accordance with conditions of Term Agreement D012606, LaBella Associates, P.C. conducted an asbestos sampling survey of the Interstate Route I-481 south bound bridge over Interstate Route I-81. Based on laboratory analyses of bulk samples collected, no asbestos-containing materials were identified.

II. Site Description

The Site is located in Onondaga County, New York. For the purpose of this report, the Site consists of the Interstate Route I-481 south bound bridge over Interstate Route I-81. (See attached FIGURE 1 - Site Location Map).

III. Inspection Procedures

The following procedures were used to obtain the data for this Report:

A. A review of record drawings supplied by Region 3 personnel and a visual inspection of the subject structure were conducted to identify potential visible/accessible sources of asbestos-containing materials. Observations and notes were made to provide a description of the structure, and an estimate of the approximate amount, length, or area of ACM present.

B. Physical or operational constraints, which might affect the removal of the ACM, were identified and reported.

C. Bulk samples of suspected ACM were collected during the site inspection of the subject structure. Samples were taken from each homogeneous area that may contain ACM.

D. Samples were submitted for analysis. Preliminary PLM analyses of NOB materials were performed by LaBella Laboratories, a NYSDOH approved laboratory, to determine the presence and percentage of asbestos in each sample. TEM analyses of NOB materials, if necessary, were performed by AMA Analytical, Inc.

E. Lab results were used to determine the approximate location, type, and amount of the verified ACM.

F. A drawing of the structure at the Site was created, in order to show sample locations and the approximate locations and amounts of confirmed ACM observed in accessible locations.

Only accessible areas were inspected. Inaccessible areas, such as areas within the bridge or the approaches to the bridge were not included in this inspection. No investigation was conducted by LaBella Associates to determine the presence of underground utilities on or in the immediate vicinity of the Site. Actual sample locations are shown in the attached FIGURE 2. Results of bulk sample analyses are tabulated in the attached TABLE.

IV. Results

BIN 1031711 Interstate Route I-481 South Bound over Interstate Route I-81

Based on laboratory analyses of bulk samples collected, no asbestos-containing materials were identified.

Certification

LaBella Associates, P.C. certifies the accuracy of this report, to the best of our knowledge, based on the information collected as described in the Inspection Procedures Section of this investigation.

Figures & Table

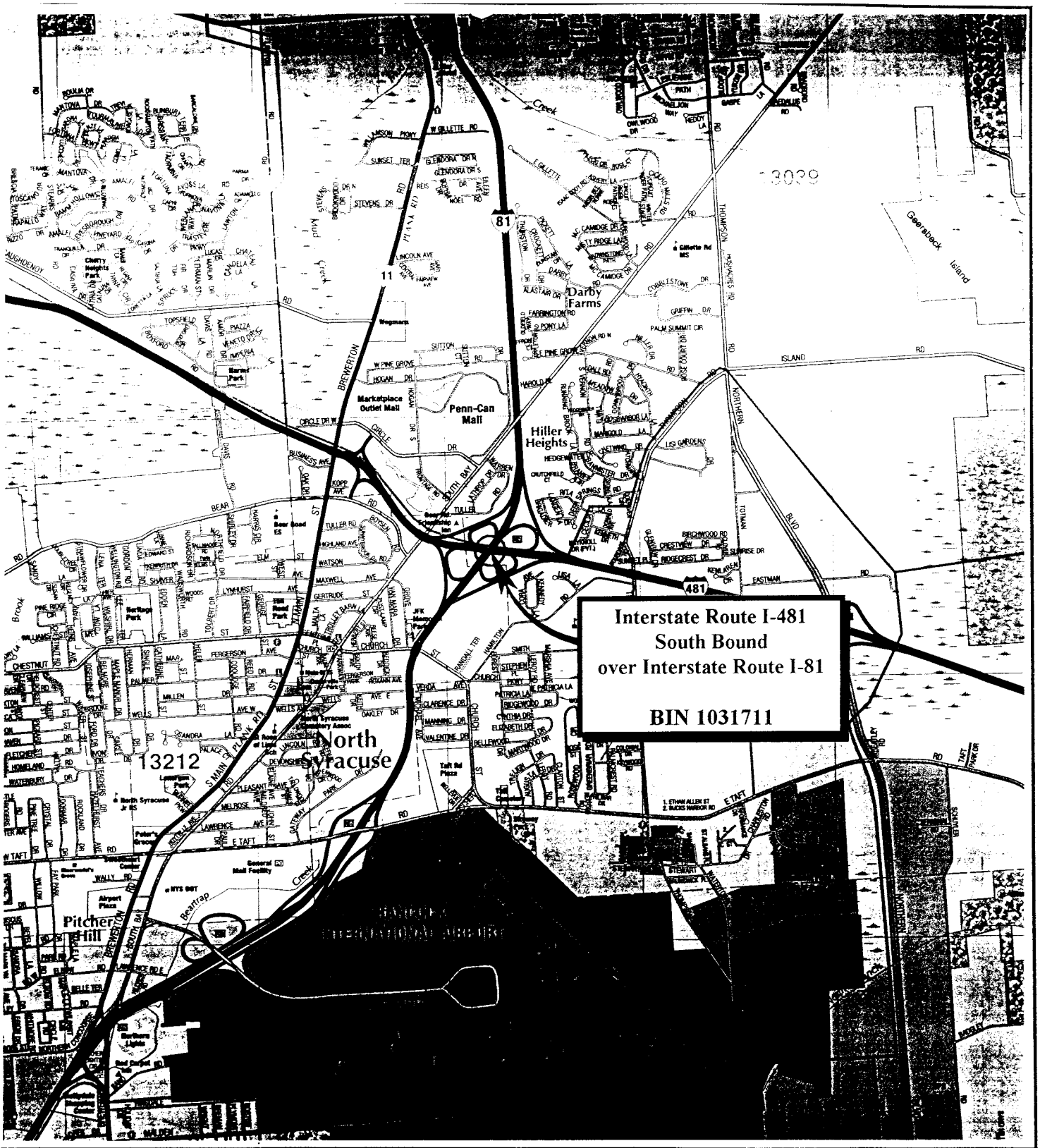

N

FIGURE 1
Site Location Map

Interstate Route I-481 South Bound
over Interstate Route I-81
Onondaga County, New York

LABELLA

PROJECT NO. 201001

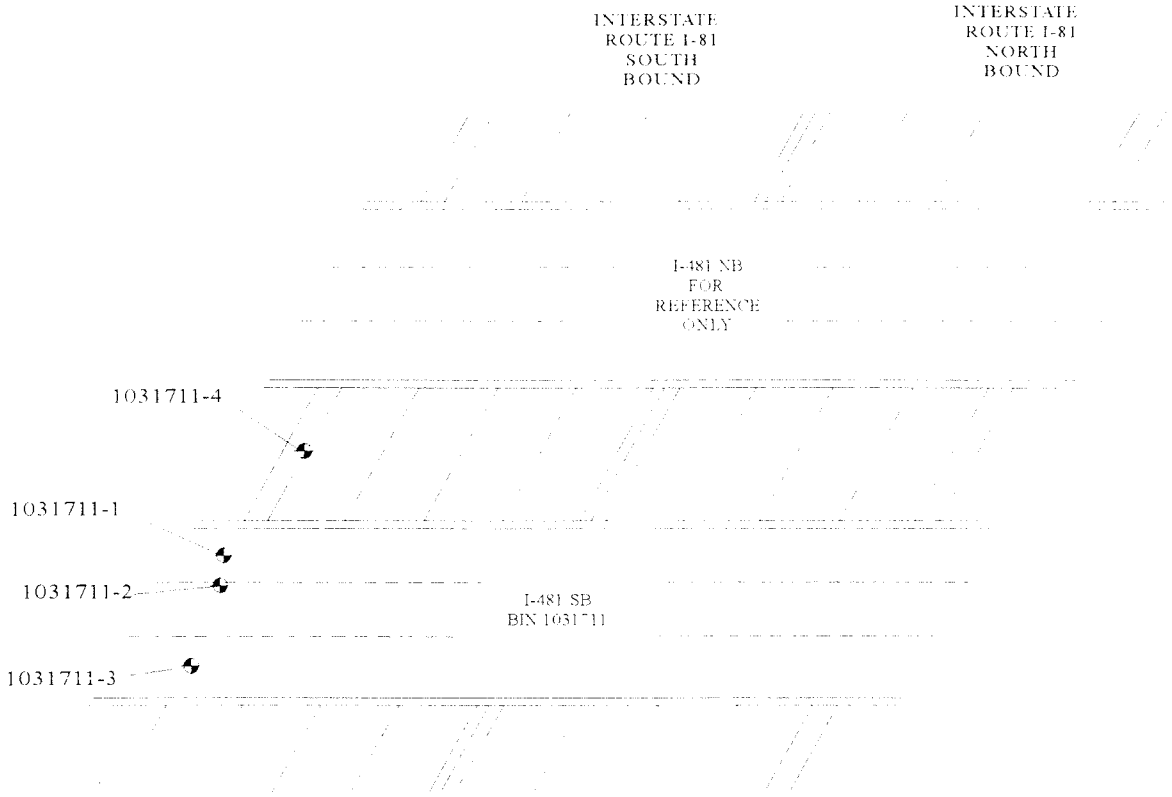

NOTE: NO ASBESTOS-CONTAINING MATERIALS IDENTIFIED.

LEGEND

1031711-1 SAMPLE LOCATION

NORTH

PROJECT TITLE: ASBESTOS SAMPLING SURVEY
19 BRIDGES ALONG INTERSTATE I-481
ONONDAGA COUNTY, NEW YORK

PROJECT NO. 201001

PIN 3056.13.111

FIGURE TITLE: FIGURE 2 BIN 1031711
I-481 SB OVER INTERSTATE ROUTE I-81
SAMPLE LOCATIONS &
CONFIRMED ACM

NOT TO SCALE

DATE: AUGUST, 2001

Bulk Sample Results Table

Asbestos Sampling Survey
BIN 1031711
Interstate Route I-481 South Bound
over Interstate Route I-81
Onondaga County, New York
LaBella Project # 201001
PIN 3056.13.111

Sample #	Sample Location	Type of Material	Results % Asbestos	Amount of Material	Specification Item No.
1031711-1	West End of Bridge Around Bearing	White Caulking Compound	None Detected	N/A	N/A
1031711-2	West End of Bridge Beneath Bearing	Bearing Pad	None Detected	N/A	N/A
1031711-3	West End of Bridge on Back Wall	Gray Masonry Coating	None Detected	N/A	N/A
1031711-4	West Back Wall in Expansion Joint	Brown Joint Filler	None Detected	N/A	N/A

NEW YORK STATE
DEPARTMENT OF TRANSPORTATION
D031085 P.I.N 3501.60

LEVEL 1 LOAD RATING
B.I.N. 1031711
I-481 SOUTHBOUND OVER I-81

LOAD RATING SUMMARY TABLE (LOAD FACTOR)					
CONTROLLING MEMBER	CONTROLLING PARAMETER	LIVE LOAD	LIVE LOAD TYPE	INVENTORY RATING	OPERATING RATING
(G2) INTERIOR GIRDER	DESIGN FLEXURE	HS20-44	Axle Load	HS 26.3 (47.3 TONS)	HS 43.9 (79.1 TONS)
(G2) INTERIOR GIRDER	DESIGN FLEXURE	ALTERNATE MILITARY LOADING	Axle Load	1.776 (42.6 TONS)	2.966 (71.1 TONS)

DOES NOT INCLUDE FUTURE WEARING COURSE

ANALYSIS METHOD:LOAD FACTOR

RECOMMENDED POSTING AS-IS CONDITION: _____ Tons __X__ None

CALCULATED BY:



DATE: 3-6-2014

QUALITY ASSURANCE BY:



DATE: 3-6-2014

C&S COMPANIES

499 Col. Eileen Collins Blvd.
Syracuse, NY 13212
phone 315-455-2000
fax 315-455-9667
www.cscos.com

ENGINEERS
DESIGN BUILD
TECHNICAL RESOURCES
OPERATIONS

C&S Companies

C&S Engineers, Inc.
Syracuse Hancock International Airport
Syracuse, NY 13212
phone 315-455-2000
fax 315-455-9667
www.cscos.com

TECHNICAL MEMORANDUM

TO: **FILE (190.514.001)**

FROM: **JESSICA S. BAUER, P.E**
NYSPE 084915

DATE: **FEBRUARY 10, 2014**

C&S PROJECT NO.: 190.514.001

RE: **SEISMIC ASSESSMENT SUMMARY**
NEW YORK STATE DEPARTMENT OF TRANSPORTATION
D031085; PIN 3501.60; I-81

BIN: **1031711 Seismic Assessment**

This memorandum summarizes the seismic assessment conducted for BIN 1031711 as part of the Interstate 81 Project in Syracuse, NY. The purpose of the assessment is to determine if seismic retrofits are warranted at the superstructure to substructure connection, and if further seismic evaluation of the structure is required. This memorandum will give the assessment results, retrofits required and recommendations for further seismic evaluation of the structure.

ASSESSMENT PROCEDURE

The seismic assessment was performed in accordance with the FHWA Seismic Retrofitting Manual for Highway Structures: Part 1 - Bridges, January 2006. As per the referenced manual, seismic assessment was performed for both lower level and upper level earthquake ground motion. The lower level earthquake ground motion has a reasonable likelihood of occurrence within the life of the bridge (50% probability of exceedance within a 75 year bridge life). The upper level earthquake ground motion has a finite likelihood of occurrence within the life of the bridge (7% probability of exceedance within a 75 year bridge life).

Values for the spectral acceleration for the Syracuse area used in the assessment are as follows:

- Lower Level Earthquake Ground Motion for a Short Period (0.2 seconds): $S_S = 0.0251$
- Lower Level Earthquake Ground Motion for a Long Period (1.0 seconds): $S_1 = 0.0076$
- Upper Level Earthquake Ground Motion for a Short Period (0.2 seconds): $S_S = 0.139$
- Upper Level Earthquake Ground Motion for a Long Period (1.0 seconds): $S_1 = 0.047$

These values are considered constant and are the same for all seismic assessments of bridges in the Syracuse area.

The Site Class is based on the soil conditions at the bridge location. It was determined that this parameter has little effect on the results of the seismic assessment because the spectral

You created this PDF from an application that is not licensed to print to novaPDF printer (http://www.novapdf.com)

acceleration values for the Syracuse area are small. Based on this, a site class of D was used for all seismic assessments of bridges in the Syracuse area.

Bridge parameters used in the seismic assessment were retrieved from the record drawings and WinBolts data.

The seismic assessment takes into account the anticipated service life, importance, and the seismic exposure of the bridge to determine a seismic retrofit category (SRC). The SRC is then used to determine seismic evaluation methods and retrofit measures. There are four SRCs, A through D. Seismic retrofit category A is the lowest category; bridges in this category do not require retrofits or further seismic evaluation. Seismic retrofit category D is the highest category; bridges in this category requiring the most rigorous seismic evaluations and retrofits.

ASSESSMENT RESULTS

The SRC for the bridge is "**C**" for lower level earthquake ground motion and "**B**" for upper level earthquake ground motion.

RETROFITS REQUIRED

Bearing replacements and seat width improvements are not required at the abutments or pier. Additional retrofits may be required if further seismic evaluation is needed.

RECOMMENDATIONS FOR FURTHER SEISMIC EVALUATION

For the lower level earthquake ground motion, it is recommended that capacity/demand ratios for bridge components are calculated as per Section 5.4 of the referenced manual. For the upper level earthquake ground motion, it is recommended that the capacities of the bearings are checked as per Section 5.2 of the referenced manual.

Retrofit cost estimates will be provided after any further required seismic evaluations are completed.

You created this PDF from an application that is not licensed to print to novaPDF printer (http://www.novapdf.com)

E. Recommendations:

The purpose of this deck evaluation is to document and determine existing conditions of the deck. It will be used as a tool for developing scope of work and cost estimates for the development and comparison of alternatives for the overall project.

The total damaged area is approximately 1% of the total deck area. Due to the age, condition and high chloride-ion content of the bridge deck concrete, the bridge deck should be rehabilitated or replaced to meet current standards and to mitigate excessive future maintenance costs.

Option 1 – Scarify and Bridge Deck Overlay

The maximum service life this option would provide is 25 years. The design life of this project is 30 years (ETC +30). This option does not meet the project objectives of obtaining 30+ years of service life.

Option 2 – Bridge Deck Rehabilitation with 100% Deep Removal

This option will involve partial depth reconstruction with top mat rebar exposure of the entire bridge deck to remove chloride contaminated concrete (100% deep removal). The existing bridge deck thickness is 8 ½” with 2 ½” of concrete cover over the top mat of reinforcing. The proposed partial depth reconstruction will include the addition of 1” of concrete to provide the standard 9 ½” bridge deck thickness. The existing top mat of reinforcing bars will be removed and replaced to accommodate the standard 3” of concrete cover. The existing non-conforming bridge railing will be removed and replaced with single-slope concrete barrier. The existing approach slabs will receive the same repair treatment as the deck. The existing deteriorated bridge joints will be replaced with armorless bridge joints. The Level 1 Load Rating for the final condition was found to be acceptable. Option 2 would provide a service life of 35 years to the bridge deck. The construction cost of this option is $1.26 million.

Option 3 – Bridge Deck Replacement with Cast-In-Place Concrete

This option will involve the complete demolition of the existing bridge deck, railing, bridge deck joints and approach slabs. The bridge deck will be replaced with updated single-slope concrete barrier and new armorless bridge joints. The approach slabs will also be replaced under Option 3. The new bridge deck would be 9 ½" standard thickness as compared to the 8 ½" existing thickness. The Level 1 Load Rating for the final condition was found to be acceptable. Option 3 would provide a service life of 40 years to the bridge deck. The construction cost of Option 3 is $1.35 million.

Option 4 – Bridge Deck Replacement with Pre-cast Concrete Deck Panels

This option will have the highest construction cost of all of the options however; traffic control costs may be lower due to reduced construction time. Comparison of accelerated construction to conventional construction is beyond the scope of work for this project at this time.

IN-DEPTH INSPECTION REPORT

D031085 P.I.N. 3501.60

B.I.N. 1031712

TEAM LEADER Andrew J. Fuller, P.E. 59848
NYSPE LICENSE #

ASSISTANT TEAM LEADER Jeffrey M. Reina, P.E.
ASSISTANT TEAM LEADER Logan Bessel
ASSISTANT TEAM LEADER Jerome Getter

FEATURE CARRIED I - 481 Northbound
FEATURE CROSSED I - 81

DATE FIELD WORK BEGAN December 2, 2013
DATE FIELD WORK COMPLETED December 4, 2013

TABLE OF CONTENTS

- TP 349 & 350
- IN-DEPTH CONDITION DOCUMENTATION
- IN-DEPTH PHOTO DOCUMENTATION
- ASBESTOS REPORT

TP 349 & TP 350

BRIDGE ELEMENT RATINGS

Inspection Date: 8/31/2012 RC: 33 BIN: 1031712

Bridge Ratings

Carried: 481I 481I33031000 Crossed: 81I 81I33033056 CheckValue: 1,805,768,679

Inspection Agency: 10 - NYSDOT Type of Inspection: 1 - BIENNIAL
GTMS: B02 -- Unpainted Steel Continuous - Stringer/Multi-Beam or Girder
POSTINGS: See Gen Rec Page 1 for Postings at time of inspection.
Further Investigation Needed: No
State Highway Number: 70-7 Milepoint: 14.98 AADT/Yr: 14378 / 2002
Orientation: 7 - West Political Unit: 0161 - Town of CICERO Year Built: 1986
Total Spans: 2 Ramp Bridge Attached To Span: NA BIN: NA
General Recommendation: 6 Computed Condition Rating: 5.208

Abutment Ratings:	**Beg Abut**	**End Abut**
Joint with Deck	5	5
Bearings, Bolts, Pads	4	4
Seats and Pedestals	4	5
Backwall	5	5
Stem (Breastwall)	5	5
Erosion or Scour	6	6
Footings	9	9
Piles	9	9
Recommendation	5	5

Wingwall Ratings:	**Beg Abut**	**End Abut**
Walls	6	6
Footings	9	9
Erosion or Scour	6	6
Piles	9	9

Channel Ratings:	**Channel**
Stream Alignment	8
Erosion and Scour	8
Waterway Opening	8
Bank Protection	8

Approach Ratings:	**Approaches**
Drainage	5
Embankment	6
Settlement	5
Erosion	5
Pavement	4
Guide Railing	6

Number of Flags Issued:

RED: 0 Yellow: 0 Safety: 0

Vulnerability Reviews Recommended: 1=Yes, 2=No, 3=NA, X=NotActive

Hydraulic: 3	Overload: X	Steel: 2
Collision: 2	Concrete: X	Seismic: X

Inspector's Signature: CheckValue: 1,805,768,679 Date: 8/31/2012

Bruce Opalka,PE () (Inspector ID:3000038)

Signed copy of this inspection report is available in the appropriate NYSDOT Regional Office

Reviewed By: Date: 10/4/2012

James R. Manning,PE () (QC ID:3000023)

Signed copy of this inspection report is available in the appropriate NYSDOT Regional Office

Inspection Date: 8/31/2012 RC: 33 BIN: 1031712

Span Ratings

Carried: 481I 481I33031000 Crossed: 81I 81I33033056 CheckValue: 1,805,768,679

Deck Element Ratings:	001	002
Wearing Surface	5	5
Curbs	6	4
Sidewalks, Fascias	5	5
Railings, Parapets	6	6
Scuppers	8	8
Gratings	8	8
Median	8	8
Mono Deck Surface	5	5

Superstructure Ratings:	001	002
Structural Deck	6	6
Primary Members	6	6
Secondary Members	6	6
Paint	4	4
Joints	8	8
Recommendation	6	6

Pier Ratings:	001	002
Bearings, Bolts, Pads	6	8
Pedestals	6	8
Top of Cap or Beam	6	8
Stem Solid Pier	8	8
Cap Beam	6	8
Pier Columns	5	8
Footings	9	8
Erosion or Scour	6	8
Piles	9	8
Recommendation	5	8

Utility Ratings:	001	002
Lighting	8	8
Sign Structure	8	8
Utilities and Support	8	8

Field Notes:

Field Date	Arrival	Departure	Temp (C)	Temp (F)	Weather Conditions
8/31/2012	10:00:00 AM	12:00:00 PM	27	80	sunny

IN-DEPTH CONDITION DOCUMENTATION

IN DEPTH INSPECTION REPORT

BIN 1031712

Visual Inspection

Miscellaneous concrete repairs were made to the abutments and approach slabs in 2002 under contract D259214. Also under this contract, the bridge deck joints were rehabilitated.

Cracks, spalls, and other field observations are shown on the plans. Below is a brief summary of conditions for each feature.

Superstructure

Deck – See Bridge Deck Evaluation Report

Steel – See Structural Steel Inspection Summary

Bearings – Bearing elements typically had minor rust scale. Bearing 10 was missing a nut and Bearing 9 had a nut only partially engaged.

Substructure

East Abutment – Concrete back wall contained isolated areas of delaminated concrete and cracking. The stem contained cracks, spalls, and delaminated concrete. Pedestal locations 10, 11, and 12 all exhibited cracking; the pedestal and stem concrete did not appear to be delaminated.

Pier 1 – The west and north faces of the concrete cap beam and the northernmost and center columns contained areas of delaminated concrete and cracking. Pedestals 7 and 12 exhibited cracking and spalls.

West Abutment – Concrete back wall contained minor areas of delaminated concrete and cracking throughout the wall. The stem contained cracks, spalls, and delaminated concrete. The stem at pedestal 7 contained a delaminated concrete with a 3-inch-deep spall on the corner of the stem. Pedestal locations 8 and 11 exhibited minor cracking.

STRUCTURAL STEEL INSPECTION SUMMARY

BIN 1031712

Special Emphasis Inspection Required

Non-Redundant/Fracture Critical Members – No

Pin and Hangers – No

Fatigue-Prone Welds – No

Non-Categorized Fatigue-Prone Details – No

Other (Specified in Text) – No

Special Emphasis Details

No Special emphasis details.

Overall Steel Condition

The steel showed no sign of major deterioration. There were no isolated pockets of major section loss and no areas of concern were observed. There was a uniform patina on the entire steel structure, indicating the weathering seal was performing as intended.

Paint

The bridge contained weathering steel, there was no paint.

Section Loss

Due to the age of the steel a blanket 5% section loss should be used in load rating.

D250416

FED. RD. REG. NO.	STATE	FEDERAL AID PROJECT NO.	SHEET NO.	TOTAL SHEETS
	NEW YORK	I-481-2(154) IR-81-2(154)	342	380

INTERSTATE RTE. 570 EXTENSION (I-481)
NORTHERN BLVD. TO BEAR ROAD INTERCHANGE
ONONDAGA COUNTY

CAPITAL PROJECT IDENTIFICATION NO. 3107.00 (01)

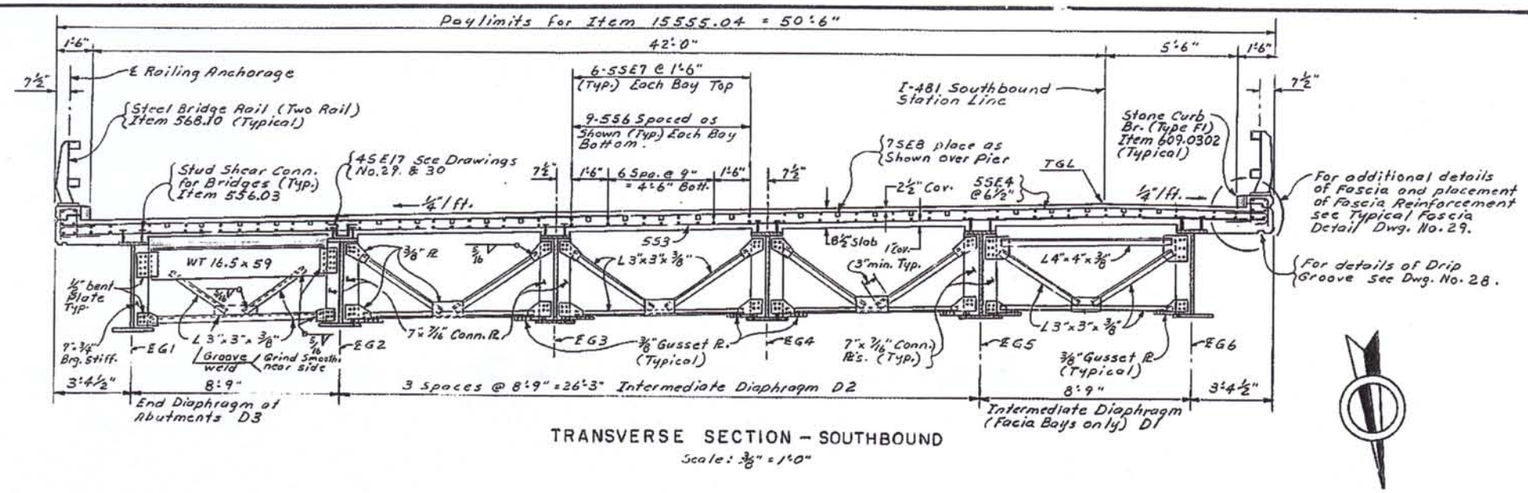

TRANSVERSE SECTION – SOUTHBOUND
Scale: 3/8" = 1'-0"

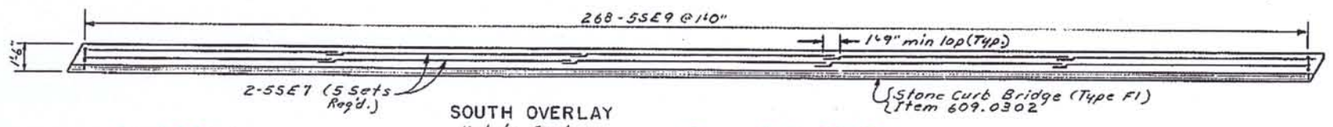

SOUTH OVERLAY
Not to Scale

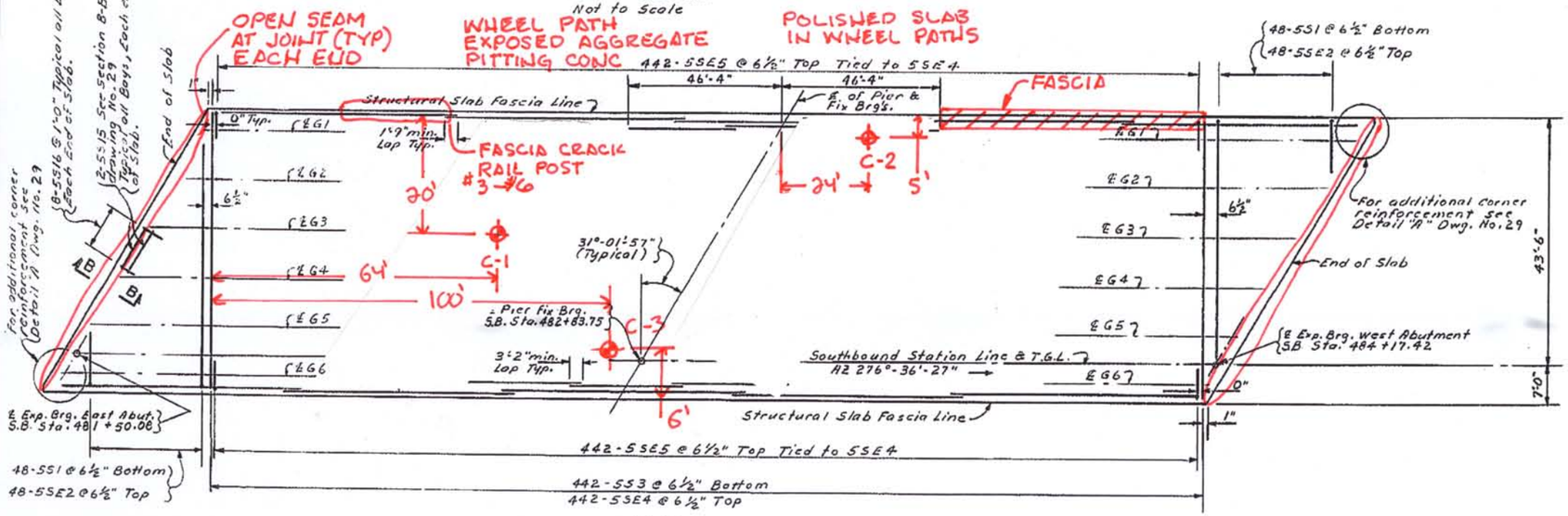

PLAN
Not to Scale



NORTH OVERLAY
Not to Scale

CONCRETE & REINFORCEMENT TABLE			
POUR	ITEM 555.01	ITEM 15555.04	ITEM 556.0202
SLAB	——	13630 S.F.	——
SO. OVERLAY	5.04 C.Y.	——	572 Lb's.
NO. OVERLAY	5.04 C.Y.	——	572 Lb's.

LEGEND

- C-X — CORE LOCATION
- XX — PHOTO LOCATION
- DELAMINATION
- SPALLING
- CRACK
- MAP CRACKING
- MOISTURE

NOTES:

For details of Stone Curb see Common Structure Details Drawing No. 6.

For details of Steel Bridge Railing see Common Structure Details Drawing No. 7.

For details of Stud Shear Connectors see Common Structure Details Drawing No. 5

For details of Section B-B see Drawing No. 29.

For Railing Layout see Drawing No 39.

For Superstructure Notes see Common Structure Details Drawing No. 1.

Superstructure Slab Item 15555.04 Structural Slab Concrete (Optional Forming System).

STATE OF NEW YORK
DEPARTMENT OF TRANSPORTATION
STRUCTURES DESIGN AND CONSTRUCTION DIVISION

BR 12 NORTHBOUND AND BR 13 SOUTHBOUND OVER I81-ML

SUPERSTRUCTURE (1 OF 7)

PROJ. ENG.	DATE MADE
SQUAD	DRAWING NO. 27 OF 49

DESIGNED BY D. A. Pond
DESIGN CHECKED BY J. F. Schmidt Jr.
DETAILED BY Andrzej Lipiec
DETAIL CHECKED BY Jan Jachna Lipiec

BD 179 c (7/00)

D250416

FED. RD. REG. NO.	STATE	FEDERAL AID PROJECT NO.	SHEET NO.	TOTAL SHEETS
	NEW YORK	I-481-2(154) IR-81-2(154)	355	380

INTERSTATE RTE. 570 EXTENSION (I-481)
NORTHERN BLVD. TO BEAR ROAD INTERCHANGE
ONONDAGA COUNTY

CAPITAL PROJECT IDENTIFICATION NO. 3107.00(01)

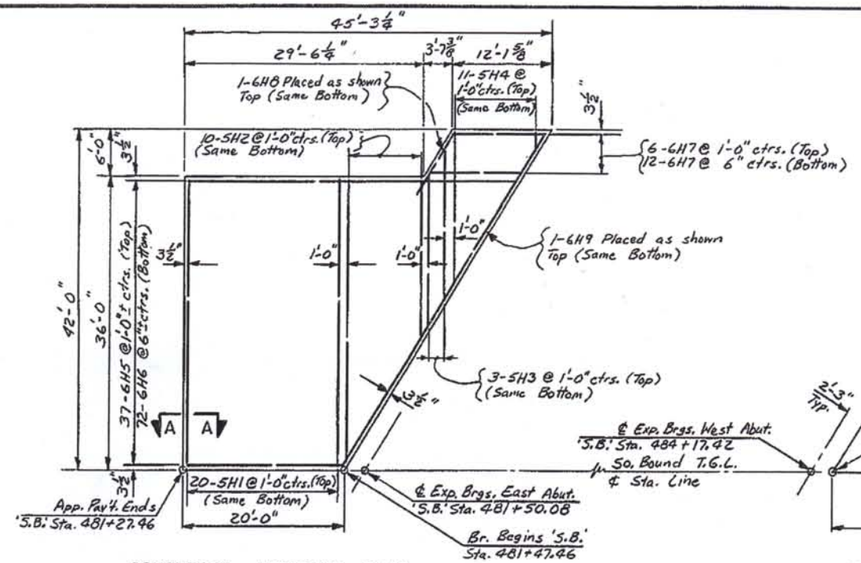

SOUTHEAST APPROACH SLAB
Scale: ⅛" = 1'-0"

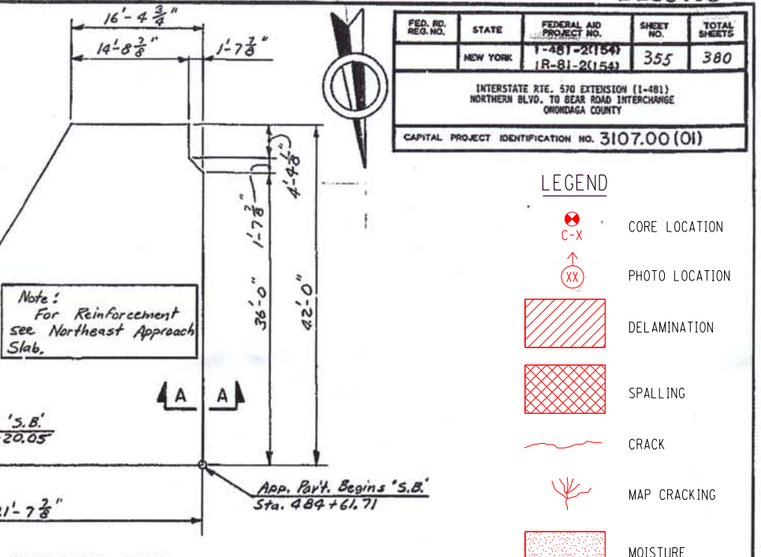

SOUTHWEST APPROACH SLAB
Scale: ⅛" = 1'-0"

APPROACH MEDIAN RAILING IS DAMAGED AND DISCONNECTED ON THIS END IN THE TRANSITION SECTION

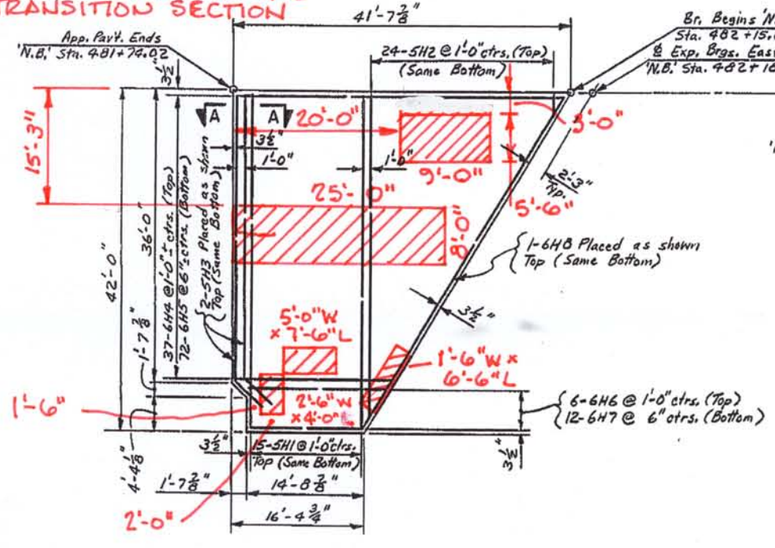

NORTHEAST APPROACH SLAB
Scale: ⅛" = 1'-0"

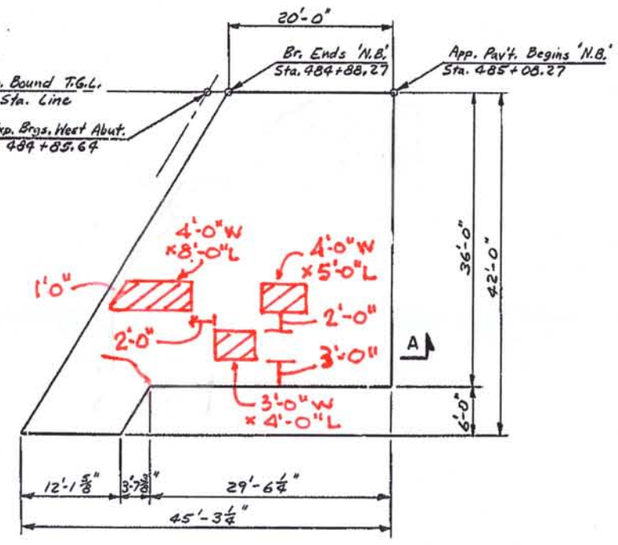

NORTHWEST APPROACH SLAB
Scale: ⅛" = 1'-0"

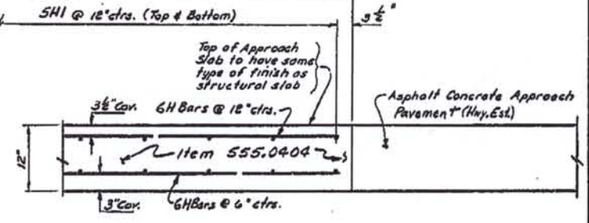

SECTION A-A
No Scale

All bar reinforcement shall be paid for under Item 556.0201.

LOCATION	ITEM 555.0404		ITEM 556.0201	
SOUTHEAST APPR. SLAB	1183	S.F.	7853	LBS.
SOUTHWEST APPR. SLAB	1211	S.F.	8108	LBS.
NORTHEAST APPR. SLAB	1211	S.F.	8108	LBS.
NORTHWEST APPR. SLAB	1183	S.F.	7853	LBS.

STATE OF NEW YORK
DEPARTMENT OF TRANSPORTATION
STRUCTURES DESIGN AND CONSTRUCTION DIVISION

BR 12 NORTHBOUND AND BR 13 SOUTHBOUND OVER I81-NL

APPROACH SLABS

PROJ. ENG. F. J. Bourassa — DATE MADE
SQUAD J. F. Sabourin Jr. — DRAWING NO. 40 OF 49

LEGEND
- C-X — CORE LOCATION
- XX — PHOTO LOCATION
- DELAMINATION
- SPALLING
- CRACK
- MAP CRACKING
- MOISTURE

DESIGNED BY J. F. Sabourin Jr. DETAILED BY B. Hunster DESIGN CHECKED BY M. J. Price DETAIL CHECKED BY J. F. Sabourin Jr.

BD 1776 (7/80)

D250416

FED. RD. REG. NO.	STATE	FEDERAL AID PROJECT NO.	SHEET NO.	TOTAL SHEETS
	NEW YORK	IBSI-2(154) IR-81-2(154)	326	380

INTERSTATE RTE. 570 EXTENSION (I-481)
NORTHERN BLVD. TO BEAR ROAD INTERCHANGE
ONONDAGA COUNTY

CAPITAL PROJECT IDENTIFICATION NO. 3107.00(01)

DESIGNED BY M.A. Pirro
DETAILED BY M.F. Sabatini Jr.
DESIGN CHECKED BY M.F. Sabatini Jr.
DETAIL CHECKED BY Anthony Spinelli

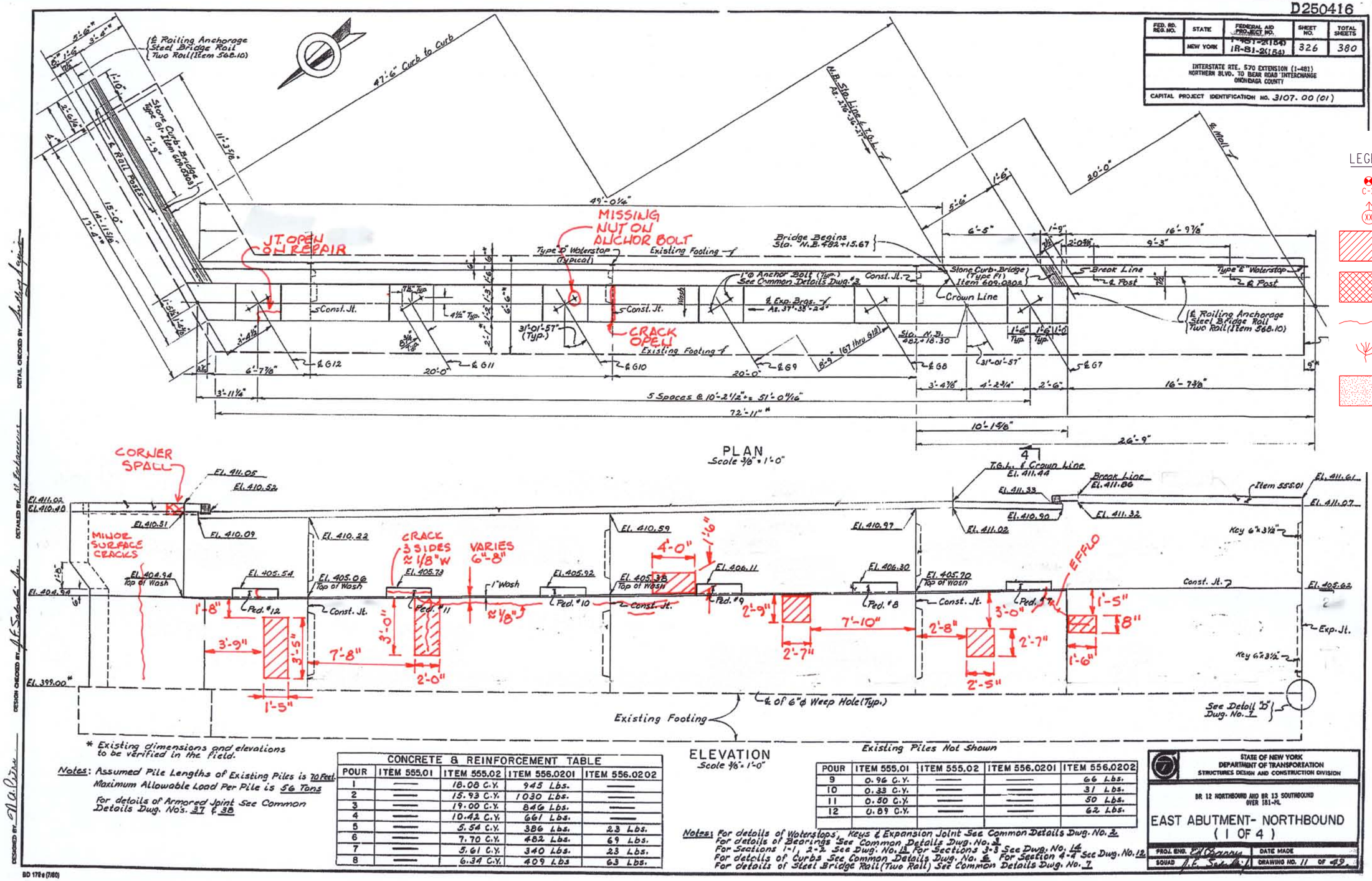

* Existing dimensions and elevations to be verified in the field.

Notes: Assumed Pile Lengths of Existing Piles is 70 Feet.
Maximum Allowable Load Per Pile is 56 Tons

For details of Armored Joint See Common Details Dwg. Nos. 37 & 38

CONCRETE & REINFORCEMENT TABLE

POUR	ITEM 555.01	ITEM 555.02	ITEM 556.0201	ITEM 556.0202
1	—	18.08 C.Y.	945 Lbs.	—
2	—	15.93 C.Y.	1030 Lbs.	—
3	—	19.00 C.Y.	846 Lbs.	—
4	—	10.42 C.Y.	661 Lbs.	—
5	—	5.54 C.Y.	386 Lbs.	23 Lbs.
6	—	7.70 C.Y.	482 Lbs.	69 Lbs.
7	—	5.61 C.Y.	340 Lbs.	23 Lbs.
8	—	6.34 C.Y.	409 Lbs	63 Lbs.

Existing Piles Not Shown

POUR	ITEM 555.01	ITEM 555.02	ITEM 556.0201	ITEM 556.0202
9	0.96 C.Y.	—	—	66 Lbs.
10	0.33 C.Y.	—	—	31 Lbs.
11	0.50 C.Y.	—	—	50 Lbs.
12	0.89 C.Y.	—	—	62 Lbs.

Notes: For details of Waterstops, Keys & Expansion Joint See Common Details Dwg. No. 2.
For details of Bearings See Common Details Dwg. No. 3.
For Sections 1-1, 2-2 See Dwg. No. 13 For Sections 3-3 See Dwg. No. 14
For details of Curbs See Common Details Dwg. No. 6. For Section 4-4 See Dwg. No. 12.
For details of Steel Bridge Rail (Two Rail) See Common Details Dwg. No. 7

LEGEND
- C-X — CORE LOCATION
- (XX) — PHOTO LOCATION
- DELAMINATION
- SPALLING
- CRACK
- MAP CRACKING
- MOISTURE

STATE OF NEW YORK
DEPARTMENT OF TRANSPORTATION
STRUCTURES DESIGN AND CONSTRUCTION DIVISION

BR 12 NORTHBOUND AND BR 13 SOUTHBOUND OVER I81-ML

EAST ABUTMENT- NORTHBOUND
(1 OF 4)

PROJ. ENG. Ed Conroy — DATE MADE
SQUAD M.F. Sabatini Jr. — DRAWING NO. 11 OF 49

BD 178e (7/80)

D250416

FED. RD. REG. NO.	STATE	FEDERAL AID PROJECT NO.	SHEET NO.	TOTAL SHEETS
	NEW YORK	I-481-2(154) IR-81-2(154)	332	380

INTERSTATE RTE. 570 EXTENSION (I-481)
NORTHERN BLVD. TO BEAR ROAD INTERCHANGE
ONONDAGA COUNTY

CAPITAL PROJECT IDENTIFICATION NO. 3107.00 (07)

NORTHBOUND PIER			
LOCATION	CONCRETE		REINFORCEMENT
	ITEM 555.01	ITEM 555.02	ITEM 556.0201
POUR 1	——	78.86 C.Y.	10,586 lb's
POUR 2	7.96 C.Y.	——	1,593 lb's
POUR 3	7.78 C.Y.	——	1,593 lb's
POUR 4	7.62 C.Y.	——	1,593 lb's
POUR 5	35.07 C.Y.	——	7,976 lb's
POUR 6	1.56 C.Y.	——	86 lb's

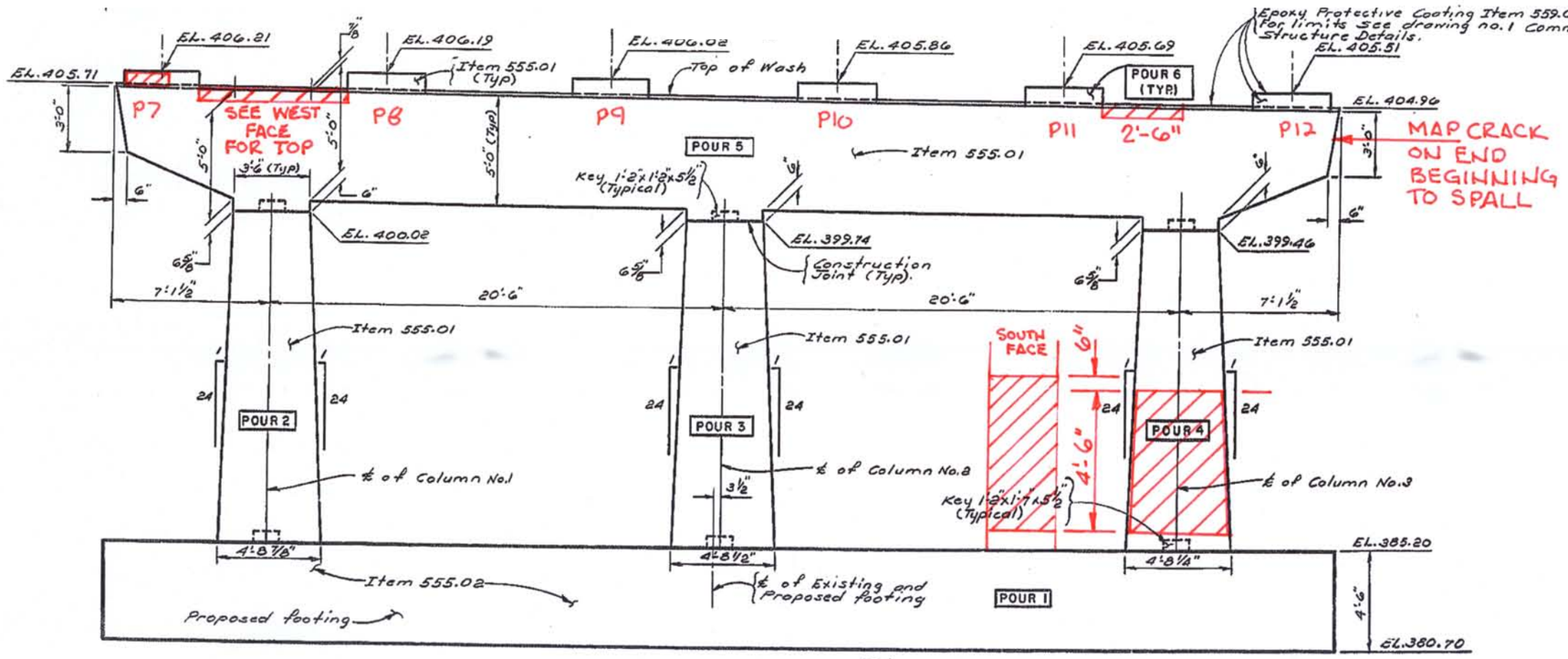

ELEVATION
Scale: 3/8" = 1'-0"
EAST FACE

Note: Cast-in-Place Concrete Piles, Item 551.07 and existing C.I.P. piles are not shown. For Pile Lay out see dwg. no. 18.

LEGEND

- CORE LOCATION
- PHOTO LOCATION
- DELAMINATION
- SPALLING
- CRACK
- MAP CRACKING
- MOISTURE

Note: For reinforcement details see dwg. #18.

STATE OF NEW YORK
DEPARTMENT OF TRANSPORTATION
STRUCTURES DESIGN AND CONSTRUCTION DIVISION

BR 12 NORTHBOUND AND BR 13 SOUTHBOUND
OVER I81-ML

PIER– NORTHBOUND
(1 OF 2)

PROJ. ENG. [signature] DATE MADE
SQUAD [signature] DRAWING NO. 17 OF 49

DESIGNED BY [signature] DESIGN CHECKED BY [signature] DETAILED BY [signature] DETAIL CHECKED BY [signature]

BD 179 c (7/80)

D250416

FED. RD. REG. NO.	STATE	FEDERAL AID PROJECT NO.	SHEET NO.	TOTAL SHEETS
	NEW YORK	I-481-2(154) IR-81-2(154)	332	380

INTERSTATE RTE. 570 EXTENSION (I-481)
NORTHERN BLVD. TO BEAR ROAD INTERCHANGE
ONONDAGA COUNTY

CAPITAL PROJECT IDENTIFICATION NO. 3107.00 (07)

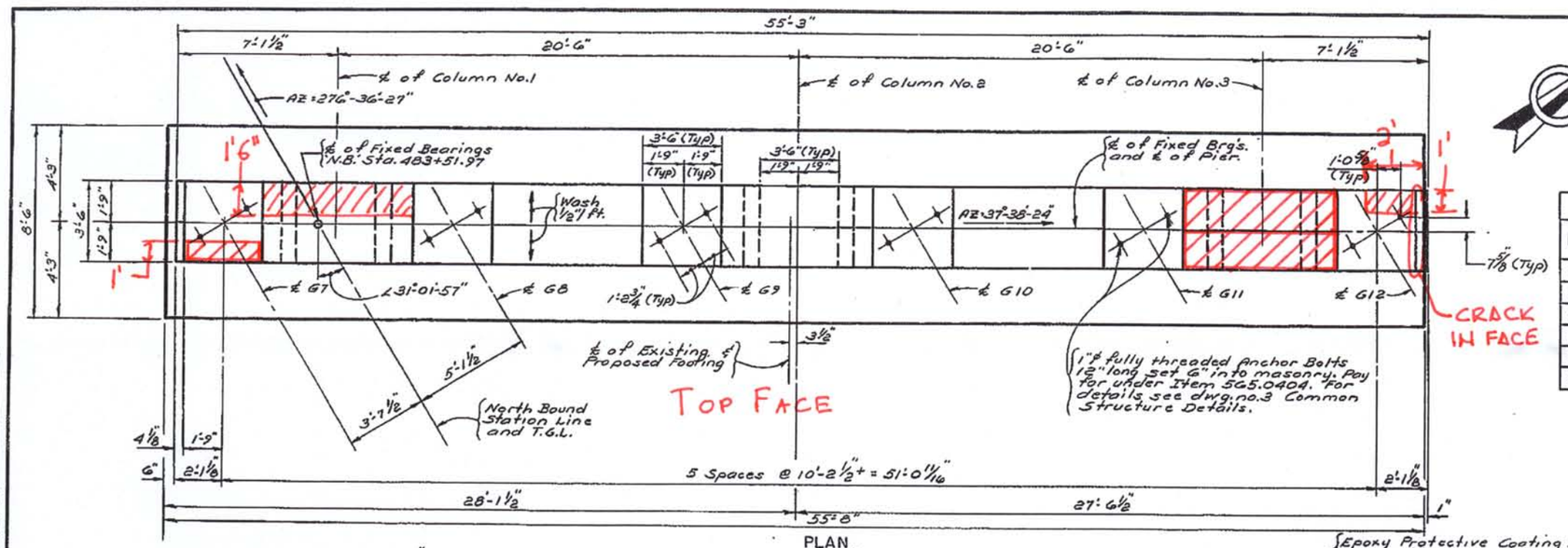

PLAN
Scale: ⅜"=1'-0"

NORTHBOUND PIER			
LOCATION	CONCRETE		REINFORCEMENT
	ITEM 555.01	ITEM 555.02	ITEM 556.0201
POUR 1	——	78.86 C.Y.	10,586 lb's
POUR 2	7.96 C.Y.	——	1,593 lb's
POUR 3	7.78 C.Y.	——	1,593 lb's
POUR 4	7.62 C.Y.	——	1,593 lb's
POUR 5	35.07 C.Y.	——	7,976 lb's
POUR 6	1.56 C.Y.	——	86 lb's

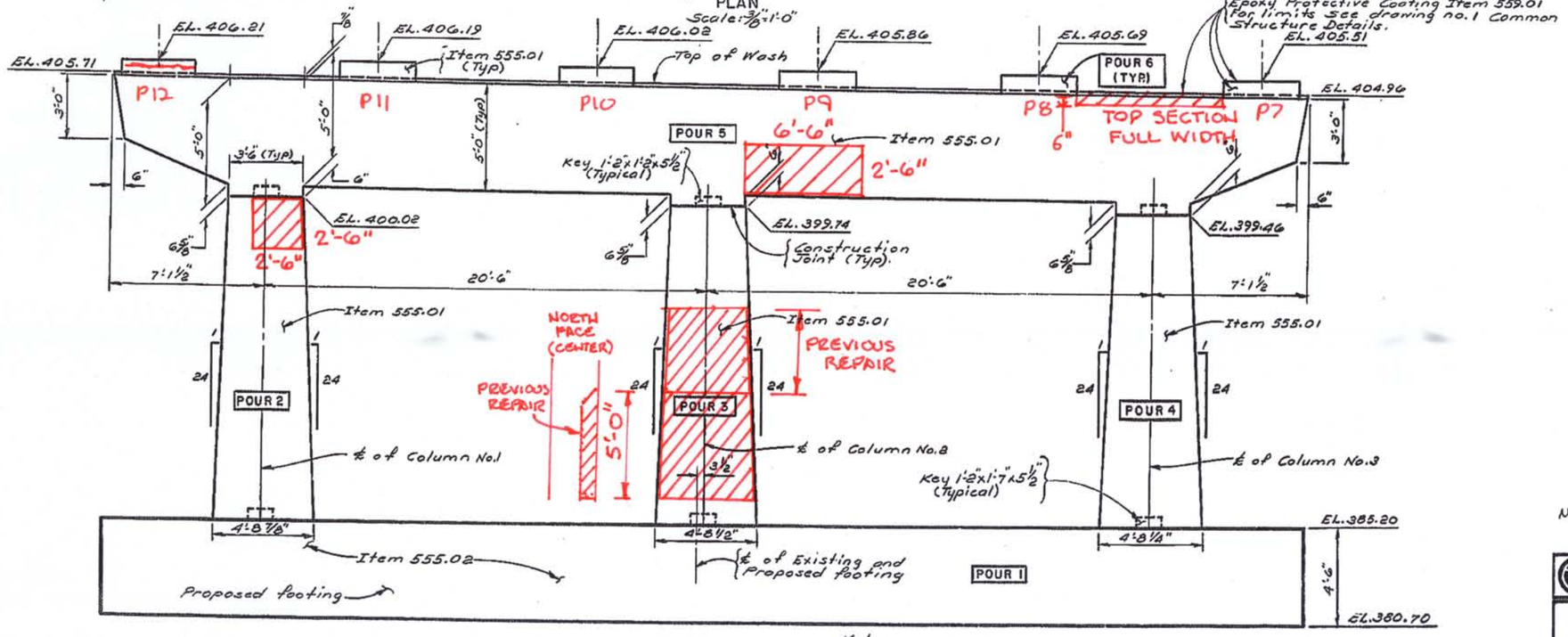

ELEVATION
Scale: ⅜"=1'-0"
WEST FACE

Note: Cast-in-Place Concrete Piles, Item 551.07 and existing C.I.P. piles are not shown. For Pile Lay out see dwg. no. 18.

LEGEND

- CORE LOCATION
- PHOTO LOCATION
- DELAMINATION
- SPALLING
- CRACK
- MAP CRACKING
- MOISTURE

Note: For reinforcement details see dwg. #18.

STATE OF NEW YORK
DEPARTMENT OF TRANSPORTATION
STRUCTURES DESIGN AND CONSTRUCTION DIVISION

BR 12 NORTHBOUND AND BR 13 SOUTHBOUND OVER I81-HL

PIER– NORTHBOUND (1 OF 2)

PROJ. ENG. [signature] DATE MADE
SQUAD [signature] DRAWING NO. 17 OF 49

DESIGNED BY [signature] DETAILED BY [signature] DESIGN CHECKED BY [signature] DETAIL CHECKED BY [signature]

BD 179c (7/80)

D250416

FED. RD. REG. NO.	STATE	FEDERAL AID PROJECT NO.	SHEET NO.	TOTAL SHEETS
	NEW YORK	IR-81-2(154)	338	380

INTERSTATE RTE. 570 EXTENSION (I-481)
NORTHERN BLVD. TO BEAR ROAD INTERCHANGE
ONONDAGA COUNTY

CAPITAL PROJECT IDENTIFICATION NO. 3107.00 (01)

Notes:

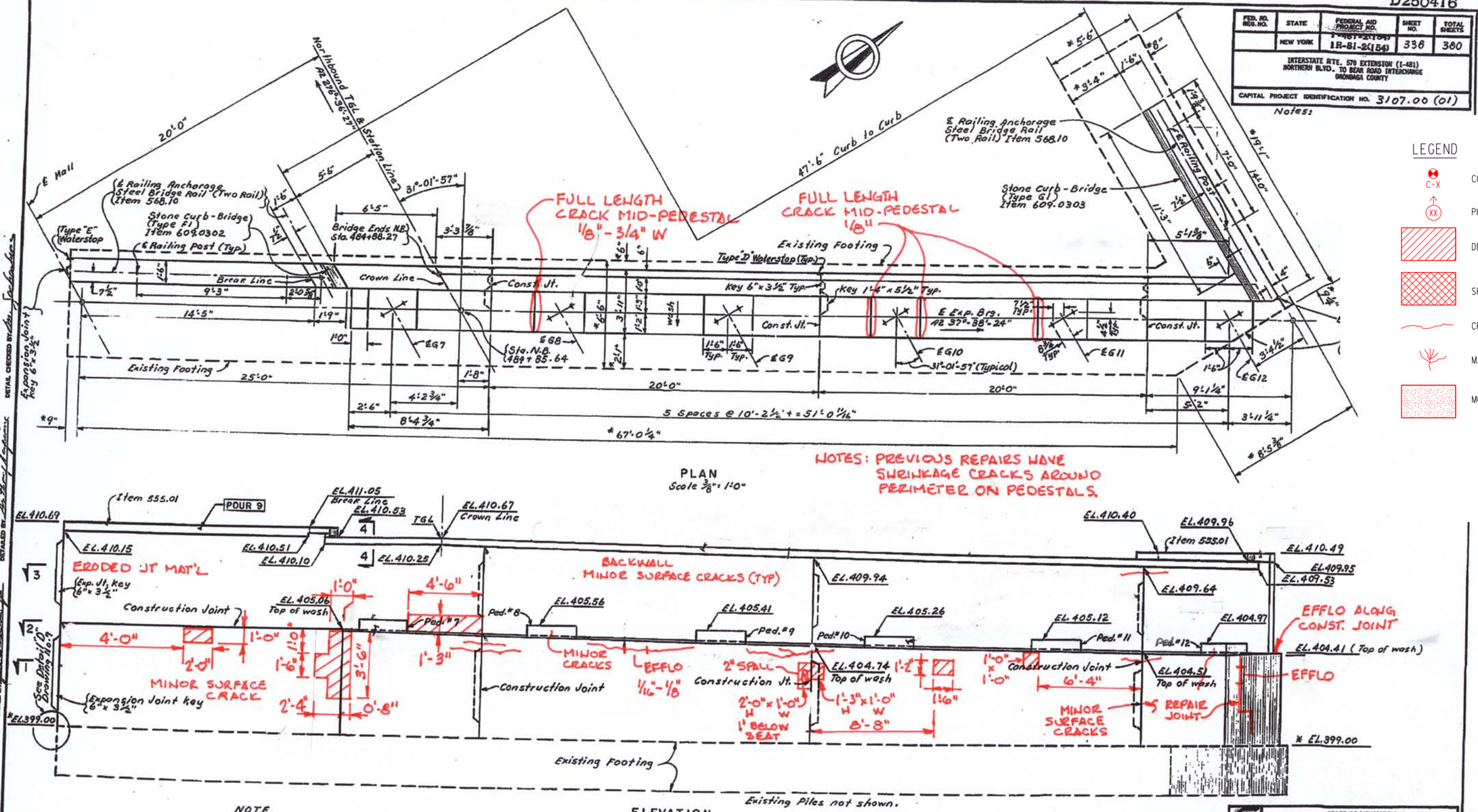

PLAN
Scale ⅜": 1'-0"

NOTES: PREVIOUS REPAIRS HAVE SHRINKAGE CRACKS AROUND PERIMETER ON PEDESTALS.

LEGEND

- C-X — CORE LOCATION
- XX — PHOTO LOCATION
- DELAMINATION
- SPALLING
- CRACK
- MAP CRACKING
- MOISTURE

ELEVATION
Not to Scale

NOTE

Assumed Pile lengths of Existing Piles is 65 feet and the maximum allowable load per pile is 64 Tons.

* Existing dimensions and Elevations to be verified in the field.

CONCRETE & REINFORCEMENT TABLE

LOCATION	ITEM 555.01	ITEM 555.02	ITEM 556.0201	ITEM 556.0202
POUR 1	—	16.33 C.Y.	929 Lbs.	—
POUR 2	—	12.97 C.Y.	951 Lbs.	—
POUR 3	—	9.65 C.Y.	653 Lbs.	—
POUR 4	—	16.97 C.Y.	826 Lbs.	—
POUR 5	—	5.47 C.Y.	385 Lbs.	23 Lbs.
POUR 6	—	7.73 C.Y.	481 Lbs.	72 Lbs.
POUR 7	—	5.91 C.Y.	370 Lbs.	57 Lbs.
POUR 8	—	5.56 C.Y.	341 Lbs.	23 Lbs.
POUR 9	0.48 C.Y.	—	—	48 Lbs.
POUR 10	0.28 C.Y.	—	—	28 Lbs.
POUR 11	1.08 C.Y.	—	—	65 Lbs.
POUR 12	0.92 C.Y.	—	61 Lbs.	—

STATE OF NEW YORK
DEPARTMENT OF TRANSPORTATION
STRUCTURES DESIGN AND CONSTRUCTION DIVISION

BR 12 NORTHBOUND AND BR 13 SOUTHBOUND OVER 181-ML

WEST ABUTMENT NORTHBOUND
(1 OF 4)

PROJ. ENG. [illegible] | DATE MADE
SQUAD [illegible] | DRAWING NO. 23 OF 49

DESIGNED BY D.A. Pate — DESIGN CHECKED BY [illegible] — DETAILED BY [illegible] — DETAIL CHECKED BY [illegible]

BD 178e (7/80)

IN-DEPTH PHOTO DOCUMENTATION

C&S Engineers, Inc.
499 Col. Eileen Collins Blvd.
Syracuse, New York 13212
Phone: (315) 455-2000
Fax: (315) 455-9667
www.cscos.com

I-481 NB over I-81 NB and SB - BIN 1031712



DESCRIPTION: EAST ABUTMENT – PEDESTAL 11 – LOOKING WEST – CONTAINS CRACKS ON NORTH, SOUTH & WEST FACES.

PHOTO 1



DESCRIPTION: EAST ABUTMENT – STEM – UNDER PEDESTAL 7 – 2 FT X 1 FT. DELAMINATION WITH SPALL AND EXPOSED REINFORCING BAR

PHOTO 2

C&S Engineers, Inc.
499 Col. Eileen Collins Blvd.
Syracuse, New York 13212
Phone: (315) 455-2000
Fax: (315) 455-9667
www.cscos.com

I-481 NB over I-81 NB and SB - BIN 1031712



DESCRIPTION: EAST ABUTMENT – STEM – LOOKING EAST – CONCRETE DELAMINATION WITH RUST STAINING – TYPICAL NEAR PEDS. 7, 8, 11 & 12

PHOTO 3



DESCRIPTION: EAST ABUTMENT – BACKWALL – BETWEEN PEDESTALS 9 & 10 – CONCRETE DELAMINATION WITH SPALL.

PHOTO 4

C&S Engineers, Inc.
499 Col. Eileen Collins Blvd.
Syracuse, New York 13212
Phone: (315) 455-2000
Fax: (315) 455-9667
www.cscos.com

I-481 NB over I-81 NB and SB - BIN 1031712



DESCRIPTION: EAST ABUTMENT – STEM – NORTH OF PEDESTAL 10 – CRACK IN UPPER PORTION OF STEM WITH RUST STAINING.

PHOTO 5



DESCRIPTION: NORTHEAST WINGWALL – LOOKING SOUTHEAST – CONCRETE SPALL ON TOP NEAR DECK JOINT.

PHOTO 6

C&S Engineers, Inc.
499 Col. Eileen Collins Blvd.
Syracuse, New York 13212
Phone: (315) 455-2000
Fax: (315) 455-9667
www.cscos.com

I-481 NB over I-81 NB and SB - BIN 1031712



DESCRIPTION: STEEL GIRDERS – BAY 3 – LOOKING NORTHWEST - TYPICAL

PHOTO 7



DESCRIPTION: STEEL GIRDER – BAY 1 – LOOKING NORTHWEST - TYPICAL

PHOTO 8

C&S Engineers, Inc.
499 Col. Eileen Collins Blvd.
Syracuse, New York 13212
Phone: (315) 455-2000
Fax: (315) 455-9667
www.cscos.com

I-481 NB over I-81 NB and SB - BIN 1031712



DESCRIPTION: CENTER PIER – PEDESTAL 7 – SOUTH FACE – HORIZONTAL CRACK

PHOTO 9



DESCRIPTION: CENTER PIER – EAST FACE – LOOKING SOUTHWEST – BETWEEN PEDESTALS 7 AND 8 – TOP FACE DELAMINATED

PHOTO 10

C&S Engineers, Inc.
499 Col. Eileen Collins Blvd.
Syracuse, New York 13212
Phone: (315) 455-2000
Fax: (315) 455-9667
www.cscos.com

I-481 NB over I-81 NB and SB - BIN 1031712



DESCRIPTION: CENTER PIER – EAST FACE – LOOKING WEST – BETWEEN PEDESTALS 7 AND 8 – TOP FACE DELAMINATED

PHOTO 11



DESCRIPTION: CENTER PIER – NORTH FACE – END FACE – CRACKS AND CONCRETE DELAMINATION

PHOTO 12

C&S Engineers, Inc.
499 Col. Eileen Collins Blvd.
Syracuse, New York 13212
Phone: (315) 455-2000
Fax: (315) 455-9667
www.cscos.com

I-481 NB over I-81 NB and SB - BIN 1031712



DESCRIPTION: CENTER PIER – NORTH COLUMN – EAST FACE – LOOKING WEST – CONCRETE DELAMINATION

PHOTO 13



DESCRIPTION: CENTER PIER – NORTH COLUMN – SOUTH FACE – LOOKING NORTH – CONCRETE DELAMINATION

PHOTO 14

C&S Engineers, Inc.
499 Col. Eileen Collins Blvd.
Syracuse, New York 13212
Phone: (315) 455-2000
Fax: (315) 455-9667
www.cscos.com

I-481 NB over I-81 NB and SB - BIN 1031712



DESCRIPTION: CENTER PIER – WEST FACE CONCRETE DELAMINATION ON CAP-BEAM AND COLUMNS – SEE PHOTOS 16 , 17 & 18 FOR ENLARGED VIEWS **PHOTO 15**



DESCRIPTION: CENTER PIER – NORTH COLUMN – WEST AND SOUTH SIDES – LOOKING NORTHEAST – CONCRETE DELAMINATIONS ON COLUMN **PHOTO 16**

C&S Engineers, Inc.
499 Col. Eileen Collins Blvd.
Syracuse, New York 13212
Phone: (315) 455-2000
Fax: (315) 455-9667
www.cscos.com

I-481 NB over I-81 NB and SB - BIN 1031712



DESCRIPTION: CENTER PIER – CENTER COLUMN – NORTH AND WEST FACES – LOOKING SOUTHEAST – CONCRETE DELAMINATION ON COLUMN

PHOTO 17



DESCRIPTION: CENTER PIER – WEST FACE – UNDER PEDESTAL 9 - DELAMINATION

PHOTO 18

C&S Engineers, Inc.
499 Col. Eileen Collins Blvd.
Syracuse, New York 13212
Phone: (315) 455-2000
Fax: (315) 455-9667
www.cscos.com

I-481 NB over I-81 NB and SB - BIN 1031712



DESCRIPTION: CENTER PIER – PEDESTAL 12 – LOOKING EAST – HORIZONTAL CRACK IN PEDESTAL

PHOTO 19



DESCRIPTION: NORTHWEST WINGWALL – LOOKING SOUTHWEST

PHOTO 20

C&S Engineers, Inc.
499 Col. Eileen Collins Blvd.
Syracuse, New York 13212
Phone: (315) 455-2000
Fax: (315) 455-9667
www.cscos.com

I-481 NB over I-81 NB and SB - BIN 1031712



DESCRIPTION: WEST ABUTMENT – BACKWALL – NORTH OF PEDESTAL 7 – CONCRETE DELAMINATION

PHOTO 21



DESCRIPTION: WEST ABUTMENT – STEM – ISOLATED AREAS OF DELAMINATED CONCRETE – TYPICAL

PHOTO 22

C&S Engineers, Inc.
499 Col. Eileen Collins Blvd.
Syracuse, New York 13212
Phone: (315) 455-2000
Fax: (315) 455-9667
www.cscos.com

I-481 NB over I-81 NB and SB - BIN 1031712



DESCRIPTION: WEST ABUTMENT – STEM – LOOKING NORTH – CONCRETE DELAMINATION WITH SPALL ON CORNER AND EXPOSED REINFORCING BAR **PHOTO 23**



DESCRIPTION: WEST ABUTMENT – PEDESTAL 8 – CRACK WITH CONCRETE DELAMINATION

PHOTO 24

C&S Engineers, Inc.
499 Col. Eileen Collins Blvd.
Syracuse, New York 13212
Phone: (315) 455-2000
Fax: (315) 455-9667
www.cscos.com

I-481 NB over I-81 NB and SB - BIN 1031712



DESCRIPTION: WEST ABUTMENT – PEDESTAL 10 – LOOKING NORTH – MAP-CRACKING – TYPICAL PEDESTALS 9, 10 & 11.

PHOTO 25



DESCRIPTION: EXTERIOR BEARING – TYPICAL

PHOTO 26

C&S Engineers, Inc.
499 Col. Eileen Collins Blvd.
Syracuse, New York 13212
Phone: (315) 455-2000
Fax: (315) 455-9667
www.cscos.com

I-481 NB over I-81 NB and SB - BIN 1031712



DESCRIPTION: INTERIOR BEARING – TYPICAL

PHOTO 27



DESCRIPTION: EAST ABUTMENT – FACING EAST

PHOTO 28

C&S Engineers, Inc.
499 Col. Eileen Collins Blvd.
Syracuse, New York 13212
Phone: (315) 455-2000
Fax: (315) 455-9667
www.cscos.com

I-481 NB over I-81 NB and SB - BIN 1031712



DESCRIPTION: PIER – FACING NORTH

PHOTO 29



DESCRIPTION: WEST ABUTMENT – FACING WEST

PHOTO 30

C&S Engineers, Inc.
499 Col. Eileen Collins Blvd.
Syracuse, New York 13212
Phone: (315) 455-2000
Fax: (315) 455-9667
www.cscos.com

I-481 NB over I-81 NB and SB - BIN 1031712



DESCRIPTION: BRIDGE DECK – WEST END FACING EAST

PHOTO 31



DESCRIPTION: GENERAL ELEVATION – FACING SOUTH

PHOTO 32

BIN 1031712
PHOTO LOCATION MAP

FED ROAD REG. NO.	STATE	CONTRACT NO.	SHEET NO.	TOTAL SHEETS
1	N.Y.	D259214	225	432

BRIDGE REHABILITATION PROJECT (ELEMENT SPECIFIC)
VARIOUS BRIDGES ON INTERSTATE 481
TOWNS OF DEWITT AND CICERO
ONONDAGA COUNTY
P.I.N. 305613 | B.I.N. 1031711 & 1031712

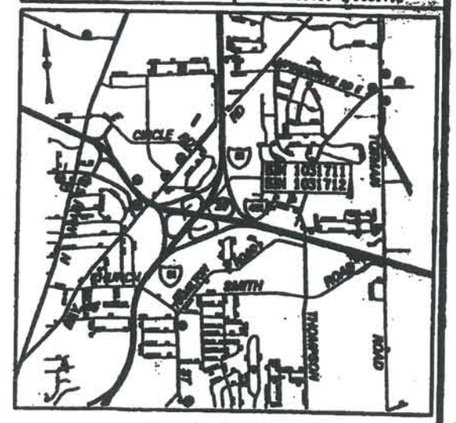

LOCATION MAP
QUADRANGLE
SCALE: 1:24000

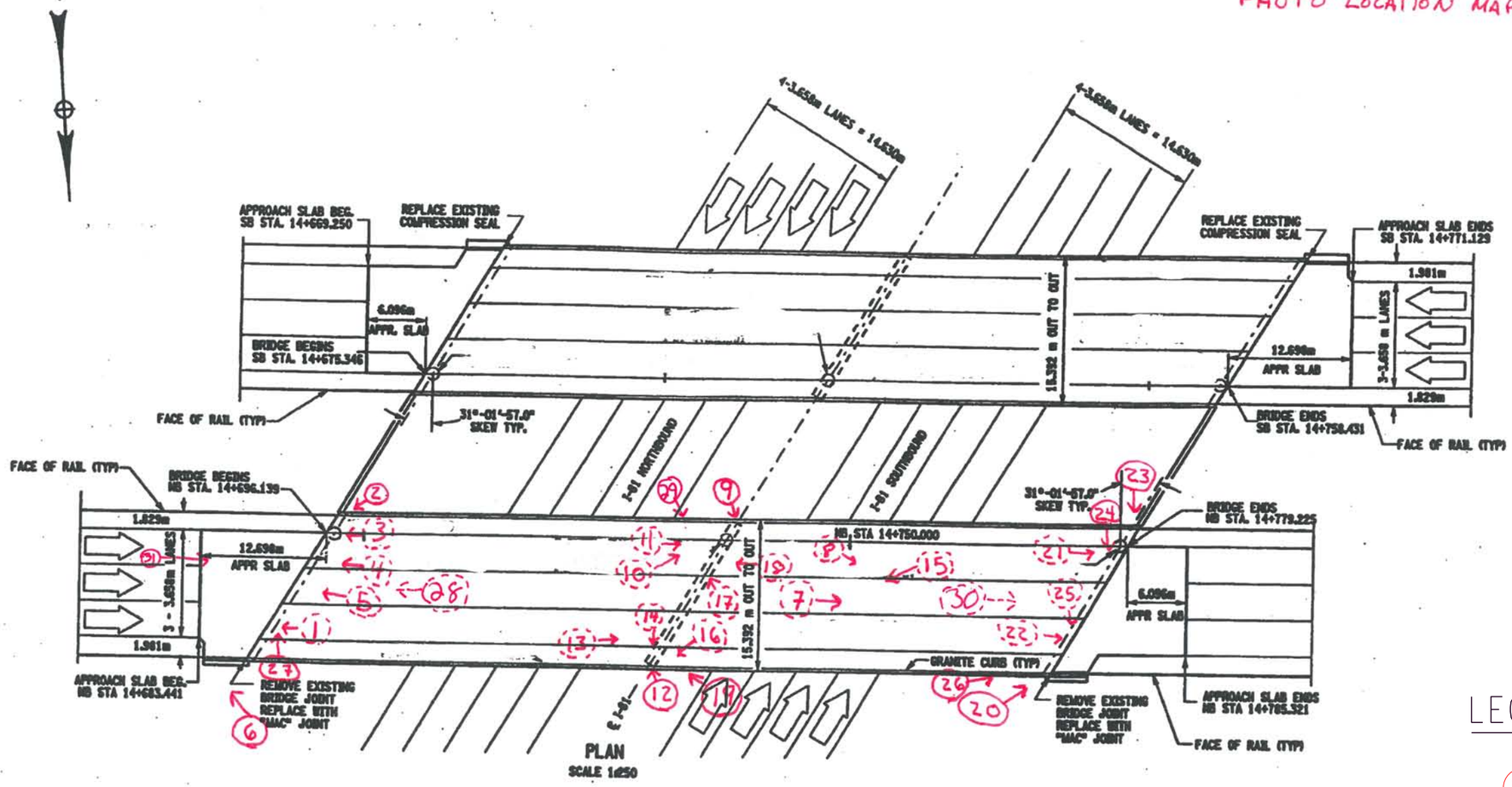

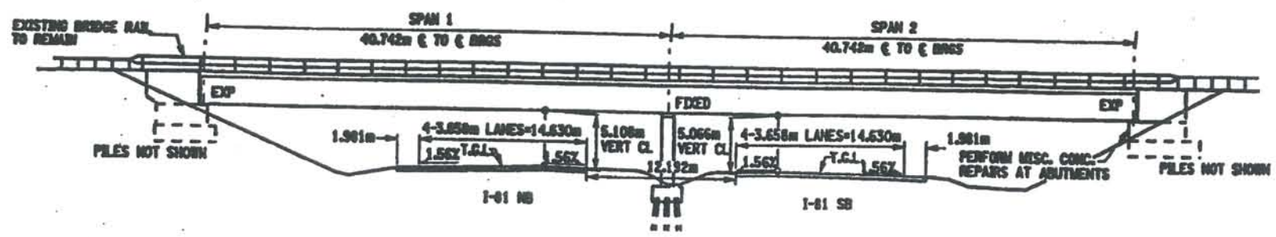

ELEVATION
SCALE 1:250

LEGEND

(XX) PHOTO LOCATION

(XX) HIDDEN PHOTO LOCATION

NOTE:
"MAC" JOINT - MODIFIED ARMORED JOINT SYSTEM WITH COMPRESSION SEAL.

BIN 1031711 SOUTHBOUND
BIN 1031712 NORTHBOUND

ALL DIMENSIONS ARE IN m UNLESS OTHERWISE NOTED

AS BUILT REVISIONS

SIGNATURE DATE

INTERSTATE 481
OVER
INTERSTATE 81
PLAN AND ELEVATION

STATE OF NEW YORK
DEPARTMENT OF TRANSPORTATION

FILENAME	REGION	DATE	DRAWING NO.
305613AJ.01A	3	10/02	GP3-1

DESIGN SUPERVISOR | JOB MANAGER | REVIEWED BY | CHECKED BY | DRAFTED BY | ESTIMATED BY | CHECKED BY

ASBESTOS DOCUMENTATION

ASBESTOS DOCUMENTATION FROM WATTS ARCHITECTURE & ENGINEERING, INC.

(WILL REPLACE BIN FOLDER ASBESTOS REPORT UPON COMPLETION)

Asbestos Sampling Survey

Location:

BIN 1031712
Interstate Route I-481 North Bound
over Interstate Route I-81

Prepared for:

New York State
Department of Transportation

PIN 3056.13.111

LaBella Project No. 201001

August 2001

Table of Contents

Page

I. Project Summary 1

II. Site Description 1

III. Inspection Procedures 1

IV. Results 2

Certification 2

Figures and Table

I. Project Summary

In accordance with conditions of Term Agreement D012606, LaBella Associates, P.C. conducted an asbestos sampling survey of the Interstate Route I-481 north bound bridge over Interstate Route I-81. Based on laboratory analyses of bulk samples collected, no asbestos-containing materials were identified.

II. Site Description

The Site is located in Onondaga County, New York. For the purpose of this report, the Site consists of the Interstate Route I-481 north bound bridge over Interstate Route I-81. (See attached FIGURE 1 - Site Location Map).

III. Inspection Procedures

The following procedures were used to obtain the data for this Report:

A. A review of record drawings supplied by Region 3 personnel and a visual inspection of the subject structure were conducted to identify potential visible/accessible sources of asbestos-containing materials. Observations and notes were made to provide a description of the structure, and an estimate of the approximate amount, length, or area of ACM present.

B. Physical or operational constraints, which might affect the removal of the ACM, were identified and reported.

C. Bulk samples of suspected ACM were collected during the site inspection of the subject structure. Samples were taken from each homogeneous area that may contain ACM.

D. Samples were submitted for analysis. Preliminary PLM analyses of NOB materials were performed by LaBella Laboratories, a NYSDOH approved laboratory, to determine the presence and percentage of asbestos in each sample. TEM analyses of NOB materials, if necessary, were performed by AMA Analytical, Inc.

E. Lab results were used to determine the approximate location, type, and amount of the verified ACM.

F. A drawing of the structure at the Site was created, in order to show sample locations and the approximate locations and amounts of confirmed ACM observed in accessible locations.

Only accessible areas were inspected. Inaccessible areas, such as areas within the bridge or the approaches to the bridge were not included in this inspection. No investigation was conducted by LaBella Associates to determine the presence of underground utilities on or in the immediate vicinity of the Site. Actual sample locations are shown in the attached FIGURE 2. Results of bulk sample analyses are tabulated in the attached TABLE.

IV. Results

BIN 1031712 Interstate Route I-481 North Bound over Interstate Route I-81

Based on laboratory analyses of bulk samples collected, no asbestos-containing materials were identified.

Certification

LaBella Associates, P.C. certifies the accuracy of this report, to the best of our knowledge, based on the information collected as described in the Inspection Procedures Section of this investigation.

Figures & Table

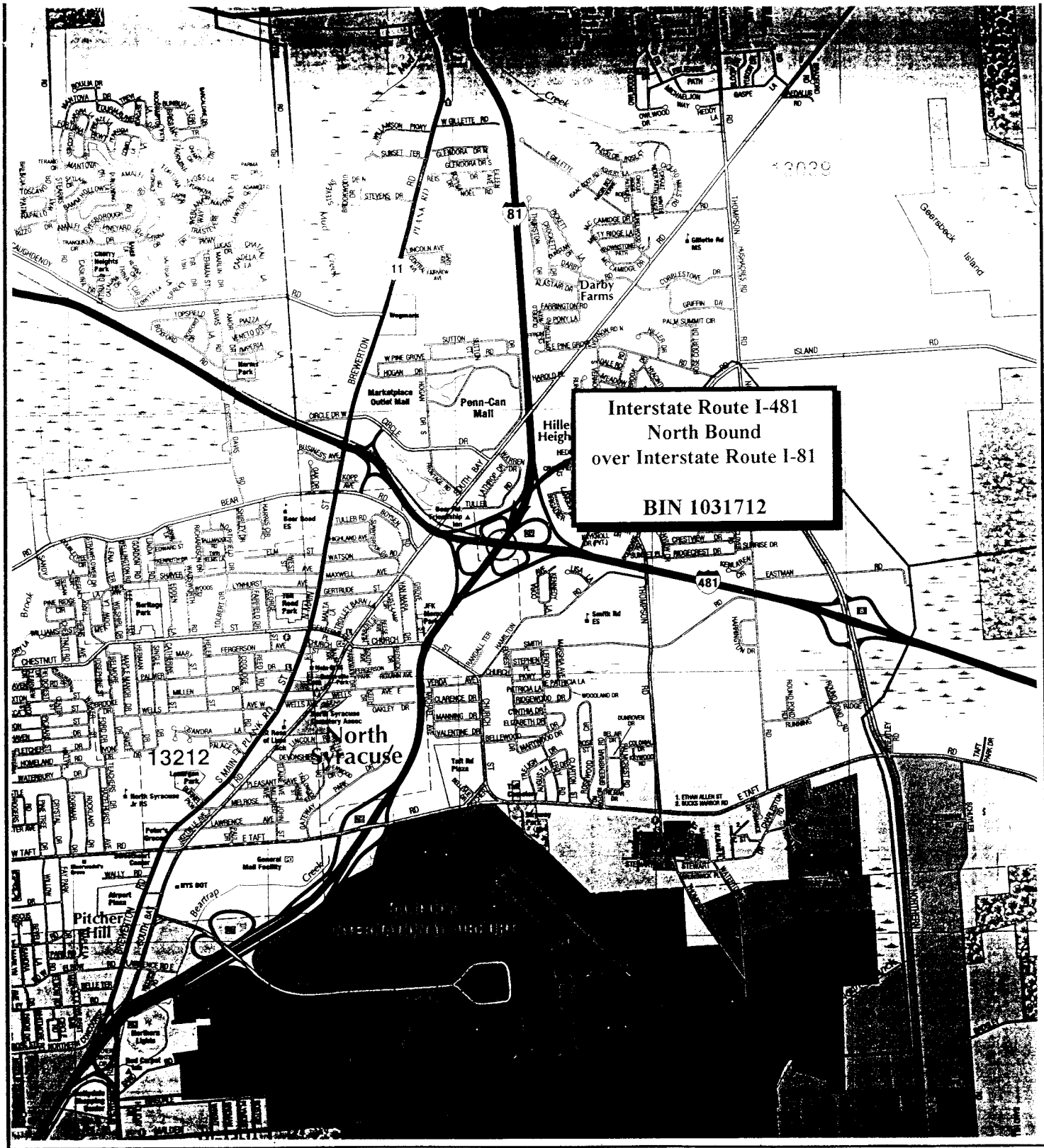

N

FIGURE 1
Site Location Map

Interstate Route I-481 North Bound
over Interstate Route I-81
Onondaga County, New York

LABELLA

PROJECT NO. 201001

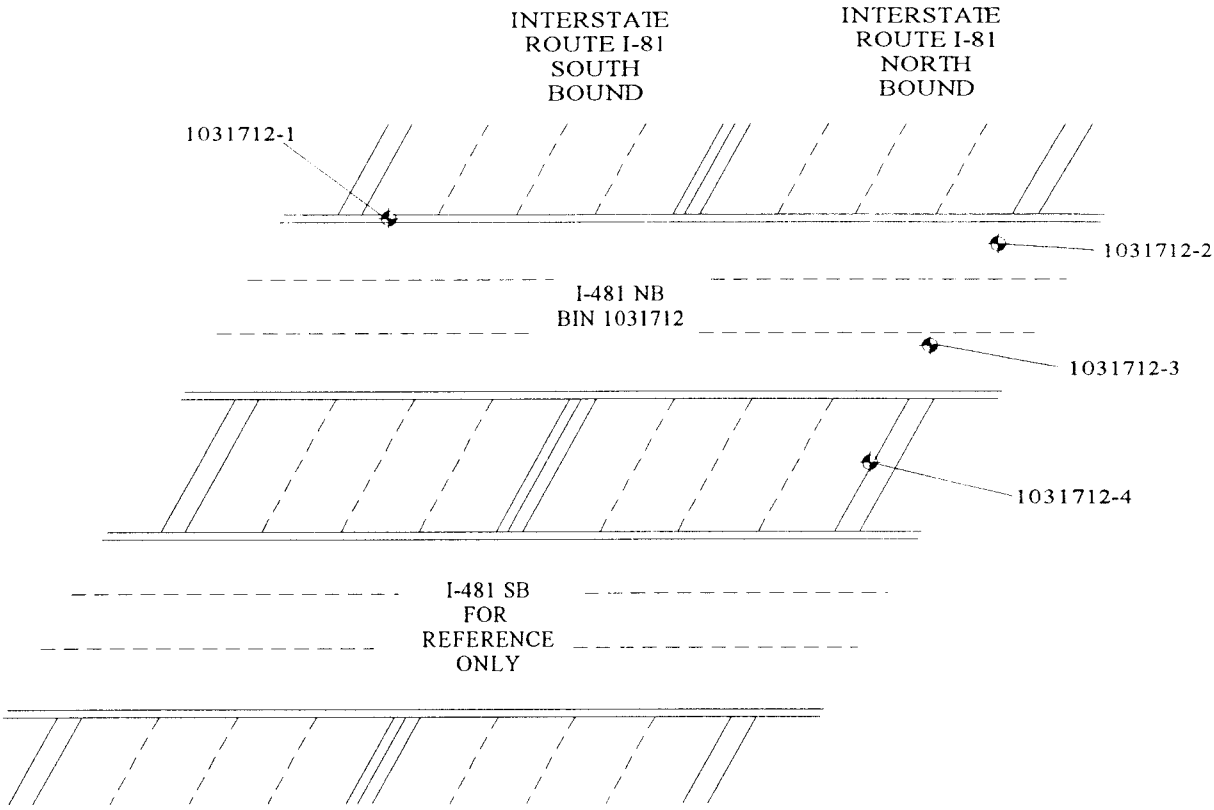

NOTE: NO ASBESTOS-CONTAINING MATERIALS IDENTIFIED.

LEGEND

◆ 1031712-1 SAMPLE LOCATION

NORTH

PROJECT TITLE: ASBESTOS SAMPLING SURVEY 19 BRIDGES ALONG INTERSTATE I-481 ONONDAGA COUNTY, NEW YORK	PROJECT NO. 201001 PIN 3056.13.111
FIGURE TITLE: FIGURE 2 BIN 1031712 I-481 NB OVER INTERSTATE ROUTE I-81 SAMPLE LOCATIONS & CONFIRMED ACM	NOT TO SCALE DATE: AUGUST, 2001

Bulk Sample Results Table

Asbestos Sampling Survey
BIN 1031712
Interstate Route I-481 North Bound
over Interstate Route I-81
Onondaga County, New York
LaBella Project # 201001
PIN 3056.13.111

Sample #	Sample Location	Type of Material	Results % Asbestos	Amount of Material	Specification Item No.
1031712-1	On Top of North Guide Rail	Black Construction Adhesive	None Detected	N/A	N/A
1031712-2	East End of Bridge Beneath Bearing	Bearing Pad	None Detected	N/A	N/A
1031712-3	East End of Bridge on Back Wall	Gray Masonry Coating	None Detected	N/A	N/A
1031712-4	East Back Wall in Expansion Joint	Brown Joint Filler	None Detected	N/A	N/A

NEW YORK STATE
DEPARTMENT OF TRANSPORTATION
D031085 P.I.N 3501.60

LEVEL 1 LOAD RATING
B.I.N. 1031712
I-481 NORTHBOUND OVER I-81

LOAD RATING SUMMARY TABLE (LOAD FACTOR)					
CONTROLLING MEMBER	CONTROLLING PARAMETER	LIVE LOAD	LIVE LOAD TYPE	INVENTORY RATING	OPERATING RATING
(G8) INTERIOR GIRDER	DESIGN FLEXURE	HS20-44	Axle Load	HS 26.3 (47.3 TONS)	HS 43.9 (79.1 TONS)
(G8) INTERIOR GIRDER	DESIGN FLEXURE	ALTERNATE MILITARY LOADING	Axle Load	1.776 (42.6 TONS)	2.966 (71.1 TONS)

DOES NOT INCLUDE FUTURE WEARING COURSE

ANALYSIS METHOD:LOAD FACTOR

RECOMMENDED POSTING AS-IS CONDITION: _____ Tons __X__ None

CALCULATED BY:



DATE: 3-6-2014

QUALITY ASSURANCE BY:



DATE: 3-6-2014

C&S COMPANIES

499 Col. Eileen Collins Blvd.
Syracuse, NY 13212
phone 315-455-2000
fax 315-455-9667
www.cscos.com

ENGINEERS
DESIGN BUILD
TECHNICAL RESOURCES
OPERATIONS

C&S Companies

C&S Engineers, Inc.
Syracuse Hancock International Airport
Syracuse, NY 13212
phone 315-455-2000
fax 315-455-9667
www.cscos.com

TECHNICAL MEMORANDUM

TO: **FILE (190.514.001)**

FROM: **JESSICA S. BAUER, P.E**
NYSPE 084915

DATE: **FEBRUARY 10, 2014**

C&S PROJECT NO.: 190.514.001

RE: **SEISMIC ASSESSMENT SUMMARY**
NEW YORK STATE DEPARTMENT OF TRANSPORTATION
D031085; PIN 3501.60; I-81

BIN: **1031712 Seismic Assessment**

This memorandum summarizes the seismic assessment conducted for BIN 1031712 as part of the Interstate 81 Project in Syracuse, NY. The purpose of the assessment is to determine if seismic retrofits are warranted at the superstructure to substructure connection, and if further seismic evaluation of the structure is required. This memorandum will give the assessment results, retrofits required and recommendations for further seismic evaluation of the structure.

ASSESSMENT PROCEDURE

The seismic assessment was performed in accordance with the FHWA Seismic Retrofitting Manual for Highway Structures: Part 1 - Bridges, January 2006. As per the referenced manual, seismic assessment was performed for both lower level and upper level earthquake ground motion. The lower level earthquake ground motion has a reasonable likelihood of occurrence within the life of the bridge (50% probability of exceedance within a 75 year bridge life). The upper level earthquake ground motion has a finite likelihood of occurrence within the life of the bridge (7% probability of exceedance within a 75 year bridge life).

Values for the spectral acceleration for the Syracuse area used in the assessment are as follows:

- Lower Level Earthquake Ground Motion for a Short Period (0.2 seconds): $S_S = 0.0251$
- Lower Level Earthquake Ground Motion for a Long Period (1.0 seconds): $S_1 = 0.0076$
- Upper Level Earthquake Ground Motion for a Short Period (0.2 seconds): $S_S = 0.139$
- Upper Level Earthquake Ground Motion for a Long Period (1.0 seconds): $S_1 = 0.047$

These values are considered constant and are the same for all seismic assessments of bridges in the Syracuse area.

The Site Class is based on the soil conditions at the bridge location. It was determined that this parameter has little effect on the results of the seismic assessment because the spectral

You created this PDF from an application that is not licensed to print to novaPDF printer (http://www.novapdf.com)

acceleration values for the Syracuse area are small. Based on this, a site class of D was used for all seismic assessments of bridges in the Syracuse area.

Bridge parameters used in the seismic assessment were retrieved from the record drawings and WinBolts data.

The seismic assessment takes into account the anticipated service life, importance, and the seismic exposure of the bridge to determine a seismic retrofit category (SRC). The SRC is then used to determine seismic evaluation methods and retrofit measures. There are four SRCs, A through D. Seismic retrofit category A is the lowest category; bridges in this category do not require retrofits or further seismic evaluation. Seismic retrofit category D is the highest category; bridges in this category requiring the most rigorous seismic evaluations and retrofits.

ASSESSMENT RESULTS

The SRC for the bridge is "**C**" for lower level earthquake ground motion and "**B**" for upper level earthquake ground motion.

RETROFITS REQUIRED

Bearing replacements are not required at the abutments or pier. Seat width improvements are required at the abutments. Additional retrofits may be required if further seismic evaluation is needed.

RECOMMENDATIONS FOR FURTHER SEISMIC EVALUATION

For the lower level earthquake ground motion, it is recommended that capacity/demand ratios for bridge components are calculated as per Section 5.4 of the referenced manual. For the upper level earthquake ground motion, it is recommended that the capacities of the bearings are checked as per Section 5.2 of the referenced manual.

Retrofit cost estimates will be provided after any further required seismic evaluations are completed.

You created this PDF from an application that is not licensed to print to novaPDF printer (http://www.novapdf.com)

E. Recommendations:

The purpose of this deck evaluation is to document and determine existing conditions of the deck. It will be used as a tool for developing scope of work and cost estimates for the development and comparison of alternatives for the overall project.

The total damaged area is approximately 1% of the total deck area. Due to the age, condition and high chloride-ion content of the bridge deck concrete, the bridge deck should be rehabilitated or replaced to meet current standards and to mitigate excessive future maintenance costs.

Option 1 – Scarify and Bridge Deck Overlay

The maximum service life this option would provide is 25 years. The design life of this project is 30 years (ETC +30). This option does not meet the project objectives of obtaining 30+ years of service life.

Option 2 – Bridge Deck Rehabilitation

This option will involve partial depth reconstruction with top mat rebar exposure of the entire bridge deck to remove chloride contaminated concrete (100% deep removal). The existing bridge deck thickness is 8 ½” with 2 ½” of concrete cover over the top mat of reinforcing. The proposed partial depth reconstruction will include the addition of 1” of concrete to provide the standard 9 ½” bridge deck thickness. The existing top mat of reinforcing bars will be removed and replaced to accommodate the standard 3” of concrete cover. The existing non-conforming bridge railing will be removed and replaced with single-slope concrete barrier. The existing approach slabs will receive the same repair treatment as the deck. The existing deteriorated bridge joints will be replaced with armorless bridge joints. The Level 1 Load Rating for the final condition was found to be acceptable. Option 2 would provide a service life of 35 years to the bridge deck. The construction cost of this option is $1.27 million.

Option 3 – Bridge Deck Replacement

This option will involve the complete demolition of the existing bridge deck, railing, bridge deck joints and approach slabs. The bridge deck will be replaced with updated single-slope concrete barrier and new armorless bridge joints. The approach slabs will also be replaced under Option 3. The new bridge deck would be 9 ½" standard thickness as compared to the 8 ½" existing thickness. The Level 1 Load Rating for the final condition was found to be acceptable. Option 3 would provide a service life of 40 years to the bridge deck. The construction cost of Option 3 is $1.35 million.

Option 4 – Bridge Deck Replacement with Pre-cast Concrete Deck Panels

This option will have the highest construction cost of all of the options however; traffic control costs may be lower due to reduced construction time. Comparison of accelerated construction to conventional construction is beyond the scope of work for this project at this time.

IN-DEPTH INSPECTION REPORT

D031085 P.I.N. 3501.60

B.I.N. 1044440

TEAM LEADER	Bruce Opalka, P.E.	6413
		NYSPE LICENSE #

ASSISTANT TEAM LEADER	Charles Brooks, P.E.
ASSISTANT TEAM LEADER	Mike Rode
ASSISTANT TEAM LEADER	Dustin Trivisonno

FEATURE CARRIED	I481 EB&WB
FEATURE CROSSED	BUTTERNUT CREEK

DATE FIELD WORK BEGAN	January 16,2014
DATE FIELD WORK COMPLETED	January 16, 2014

TABLE OF CONTENTS

- TP 349 & 350
- IN-DEPTH CONDITION DOCUMENTATION
- IN-DEPTH PHOTO DOCUMENTATION
- ASBESTOS REPORT

TP 349 & TP 350

BRIDGE ELEMENT RATINGS

Inspection Date: 6/30/2011 RC: 33 BIN: 1044440

Bridge Ratings

Carried: 481I 481I33012041 Crossed: BUTTERNUT CREEK CheckValue: 1,765,762,949

Inspection Agency: 10 - NYSDOT Type of Inspection: 1 - BIENNIAL
GTMS: 119 -- Concrete - Culvert
POSTINGS: See Gen Rec Page 1 for Postings at time of inspection.
Further Investigation Needed: No
State Highway Number: 61-17 Milepoint: 5.14 AADT/Yr: 32824 / 2010
Orientation: 1 - North Political Unit: 0233 - Town of DEWITT Year Built: 1963
Total Spans: 2 Ramp Bridge Attached To Span: NA BIN: NA
General Recommendation: 5 Computed Condition Rating: 4.795

Abutment Ratings:	Beg Abut	End Abut
Joint with Deck	8	8
Bearings, Bolts, Pads	8	8
Seats and Pedestals	5	5
Backwall	8	8
Stem (Breastwall)	5	5
Erosion or Scour	4	4
Footings	5	5
Piles	8	8
Recommendation	5	5

Wingwall Ratings:	Beg Abut	End Abut
Walls	4	4
Footings	4	4
Erosion or Scour	5	5
Piles	8	8

Channel Ratings:	Channel
Stream Alignment	6
Erosion and Scour	5
Waterway Opening	6
Bank Protection	5

Approach Ratings:	Approaches
Drainage	4
Embankment	5
Settlement	4
Erosion	5
Pavement	5
Guide Railing	6

Number of Flags Issued:

RED: 0 Yellow: 0 Safety: 0

Vulnerability Reviews Recommended: 1=Yes, 2=No, 3=NA, X=NotActive

Hydraulic: 2	Overload: X	Steel: 3
Collision: 3	Concrete: X	Seismic: X

Inspector's Signature: CheckValue: 1,765,762,949 Date: 6/30/2011

Peter Riehlman,PE () (Inspector ID:3000052)

Signed copy of this inspection report is available in the appropriate NYSDOT Regional Office

Reviewed By: Date: 7/26/2011

James R. Manning,PE () (QC ID:3000023)

Signed copy of this inspection report is available in the appropriate NYSDOT Regional Office

Inspection Date: 6/30/2011 RC: 33 BIN: 1044440

Span Ratings

Carried: 481I 481I33012041 Crossed: BUTTERNUT CREEK CheckValue: 1,765,762,949

Deck Element Ratings:	001	002
Wearing Surface	4	4
Curbs	5	5
Sidewalks, Fascias	5	5
Railings, Parapets	6	6
Scuppers	8	8
Gratings	8	8
Median	8	8
Mono Deck Surface	8	8

Superstructure Ratings:	001	002
Structural Deck	8	8
Primary Members	5	5
Secondary Members	8	8
Paint	8	8
Joints	8	8
Recommendation	5	5

Pier Ratings:	001	002
Bearings, Bolts, Pads	8	8
Pedestals	8	8
Top of Cap or Beam	5	8
Stem Solid Pier	5	8
Cap Beam	8	8
Pier Columns	8	8
Footings	5	8
Erosion or Scour	4	8
Piles	8	8
Recommendation	5	8

Utility Ratings:	001	002
Lighting	8	8
Sign Structure	8	8
Utilities and Support	8	8

Field Notes:

Field Date	Arrival	Departure	Temp (C)	Temp (F)	Weather Conditions
5/27/2011	10:30:00 AM	12:30:00 PM		75	ptly cldy
6/30/2011	2:00:00 PM	3:00:00 PM		75	ptly cldy

IN-DEPTH CONDITION DOCUMENTATION

IN DEPTH INSPECTION REPORT

BIN 1044440

- **In-Depth Condition:**

Visual Inspection: Original plans indicate the bridge was built under contract F.I.S.H. 61-17. Two distress cracks in the structure were addressed under contract D 258315 dated 10/ 99.

Cracks, spalls, and other field observations are shown on the plans. Below is a brief summary of conditions for each feature.

Superstructure

- **Deck –** There is no Bridge Deck to evaluate. Structure is a two cell concrete box culvert.
- **Steel –** There is no Structural Steel to inspect. Structure is a two cell concrete box culvert.
- **Bearings –** There are no bearings for this structure. Structure is a two cell concrete box culvert.

Substructure

Structure is a two cell concrete box culvert. The bridge is orientated North. The inlet is on the left and outlet on the right. The culvert was done with four individual pours from left to right.

Two prominent distress cracks have developed in pour 2 which were attended to under contract D58315 (10/99). These cracks run the entire length of the bridge in the top slab and then down all three walls of the structure, both sides of pier wall. The cracks straddle the left pavement stripe of I481 WB/SB. The cracks are still an issue for this structure.

During our inspection we found the areas around these cracks in the top slab to have deep hollowness which included the concrete patches adjacent to the cracks for 6”-18” on either side of the crack with heavy efflorescence seepage throughout.

The left vertical crack (crack closet to pour 1/2 joint) thins out as it progresses down all walls with light efflorescence seepage. The right crack slightly thins as it also progresses down all walls but goes from heavy to light seepage on the abutment walls and heavy to moderate on the pier walls .

In addition to the two distress cracks:

- **Begin (south) Abutment –** The rest of the wall in good condition expect for moderate seepage in pour 1/2 ceiling joint and moderate seepage in pour 2/3 ceiling and wall joint.
- **Pier –** The begin wall has light seepage in pour 1/2 joint and moderate seepage in 2/3 joint. Shallow hollowness in pour 2 left side 2' by 4'. The end wall has light seepage in pour 1/2 wall and ceiling joint and moderate seepage in pour 2/3 wall and ceiling joint.
- **End (north) Abutment –** The end wall has moderate seepage in ceiling1/2 joint and moderate seepage in pour 2/3 wall and ceiling joint.
- **Fascias –** The left fascia has some map cracking 1' by 2' in top end right. The right fascia has some cracking and delamination 1' by 2' near top of juncture with right end wingwall. A couple minor cracks over pier.
- **Wingwalls –** The bridge and wing walls were built with "no" piles**.** Both inlet and outlet have suffered scour conditions. Under contract D258315 a heavy stone scour retrofit was established for the inlet only, however, heavy stone has been placed across the outlet also. The wings have slighted settled and moved away from the stems. The worst case is the beginning right wing is slightly tilting forward.

FED ROAD REG. NO.	STATE	CONTRACT NO.	SHEET NO.	TOTAL SHEETS
1	N.Y.	D258315	14	22

ROUTE I-481 OVER BUTTERNUT CREEK
TOWN OF DEWITT
ONONDAGA COUNTY
P.I.N. 3056.12.111 | B.I.N. 1044440

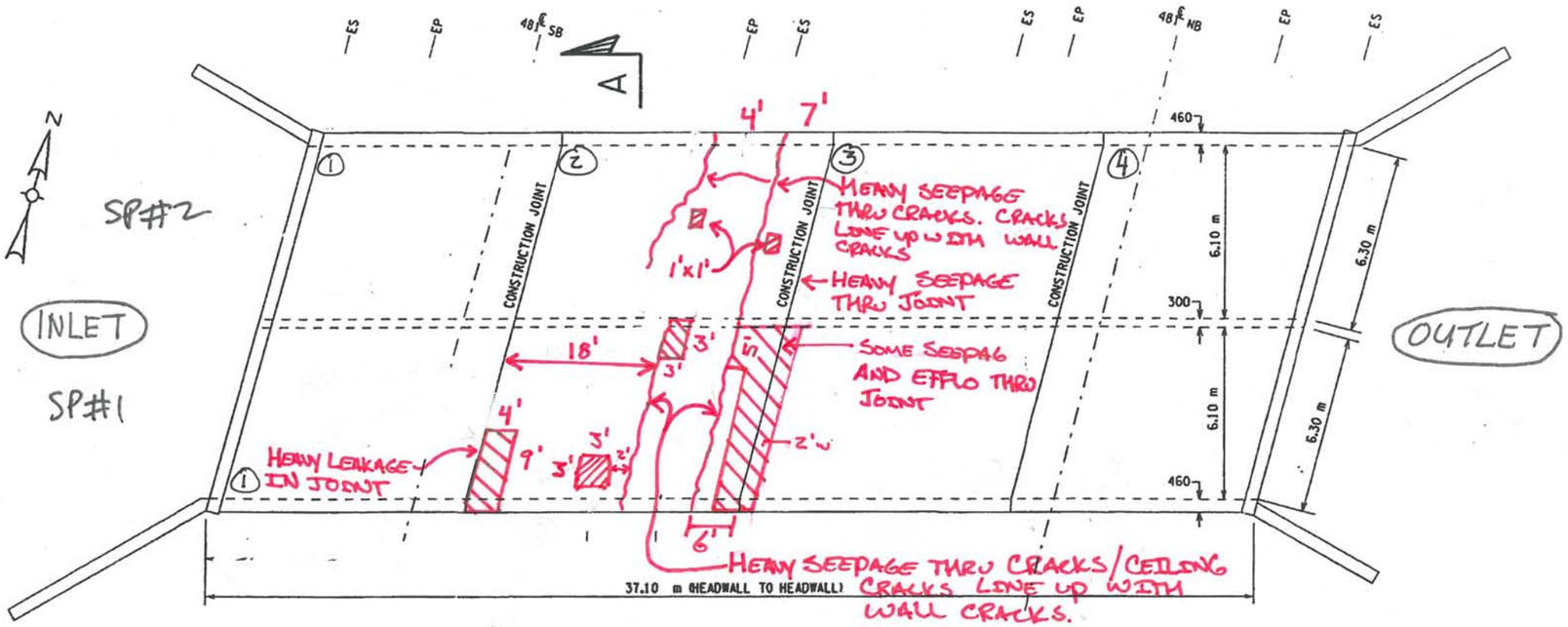

PLAN VIEW - TOP SLAB
SCALE 100:1

NOTE: MINOR LEAKAGE @ CENTERLINE JOINT.

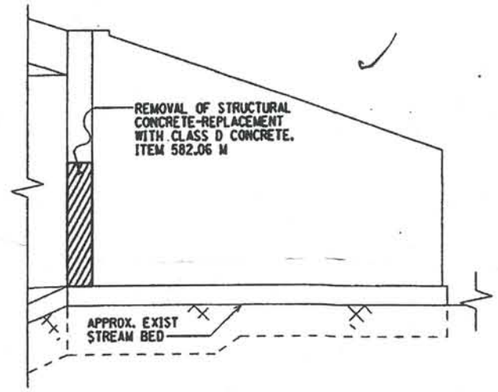

NORTHEAST WINGWALL ELEVATION
NO SCALE

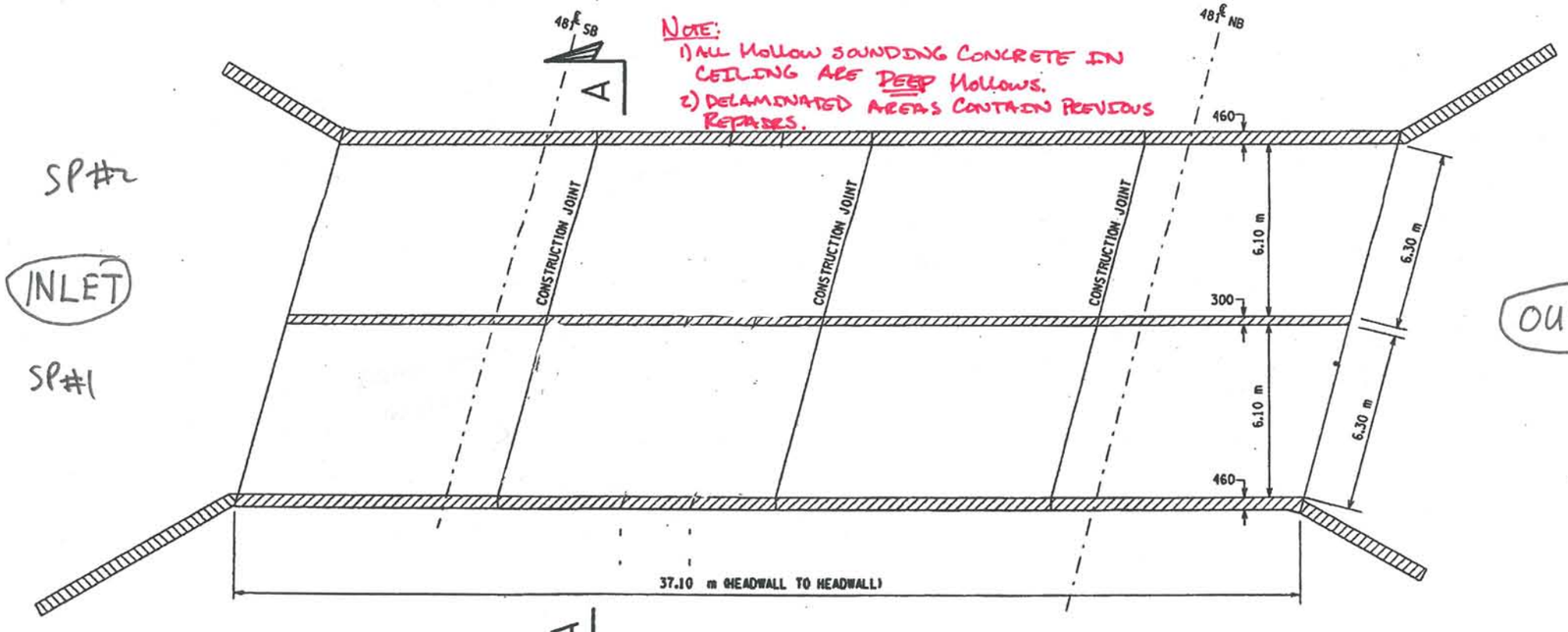

NOTE:
1) ALL HOLLOW SOUNDING CONCRETE IN CEILING ARE DEEP HOLLOWS.
2) DELAMINATED AREAS CONTAIN PREVIOUS REPAIRES.

PLAN VIEW - BOTTOM SLAB
SCALE 100:1

REMOVAL OF STRUCTURAL CONCRETE-REPLACE WITH VERTICAL AND OVERHEAD PATCHING MATERIAL ITEM 582.07 M

LEGEND
- C-X — CORE LOCATION
- XX — PHOTO LOCATION
- DELAMINATION
- SPALLING
- CRACK
- MAP CRACKING
- MOISTURE

ALL DIMENSIONS ARE IN mm UNLESS OTHERWISE NOTED

SIGNATURE DATE

CONCRETE REPAIRS
PLAN VIEWS

STATE OF NEW YORK
DEPARTMENT OF TRANSPORTATION

FILENAME	REGION	DATE	DRAWING NO.
305612AB.GID	3	10/99	CR-1

DESIGNED BY ____ CHECKED BY ____
DRAFTED BY ____
ESTIMATED BY ____
JOB MANAGER ____
DESIGN SUPERVISOR ____

FED ROAD REG. NO.	STATE	CONTRACT NO.	SHEET NO.	TOTAL SHEETS
1	N.Y.	D258315	16	22

ROUTE I-481 OVER BUTTERNUT CREEK
TOWN OF DEWITT
ONONDAGA COUNTY

P.I.N. 3056.12.111 | B.I.N. 1044440

CHECKED BY
DRAFTED BY
ESTIMATED BY
CHECKED BY
DESIGNED BY
JOB MANAGER
DESIGN SUPERVISOR

SPECIAL NOTE:

IN ADDITION TO THE SURFACE PREPERATION REQUIRMENTS SET FORTH BY ITEM 11555.8198 M THIS DISTRESS CRACK SEGMENT SHALL BE BLASTCLEANED PRIOR TO INJECTION OF PORTLAND CEMENT GROUT. COST TO BE INCLUDED IN BID PRICE FOR ITEM 11555.8198 M. BLASTCLEANING PROVISIONS OF SECTION 584 OF THE SPECIFICATION SHALL APPLY.

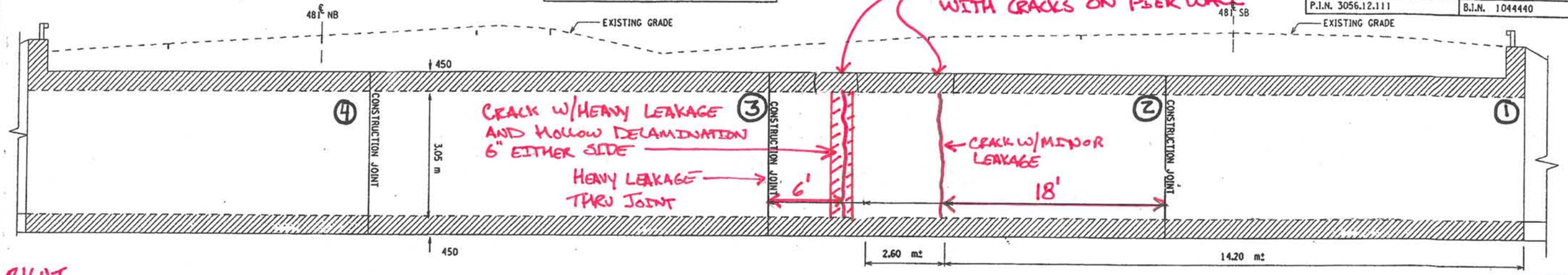

RIGHT SIDE

LEFT SIDE

INTERIOR ELEVATION VIEW - SOUTH ABUTMENT

BEGIN SPAN #1

NOTES:

1) EXACT REMOVAL LIMITS WILL BE DETERMINED IN THE FIELD BY THE ENGINEER AFTER OVERBURDEN HAS BEEN REMOVED. APPROXIMATE LIMITS ARE SHOWN. IF REINFORCING BARS REQUIRE REPLACEMENT, PLEASE REFER TO RECORD PLANS AVAILABLE IN REGIONAL OFFICE TO CONFIRM BAR SIZES. REPLACMENT OF REINFORCING BAR WILL BE PAID UNDER ITEM 556.0201 M.

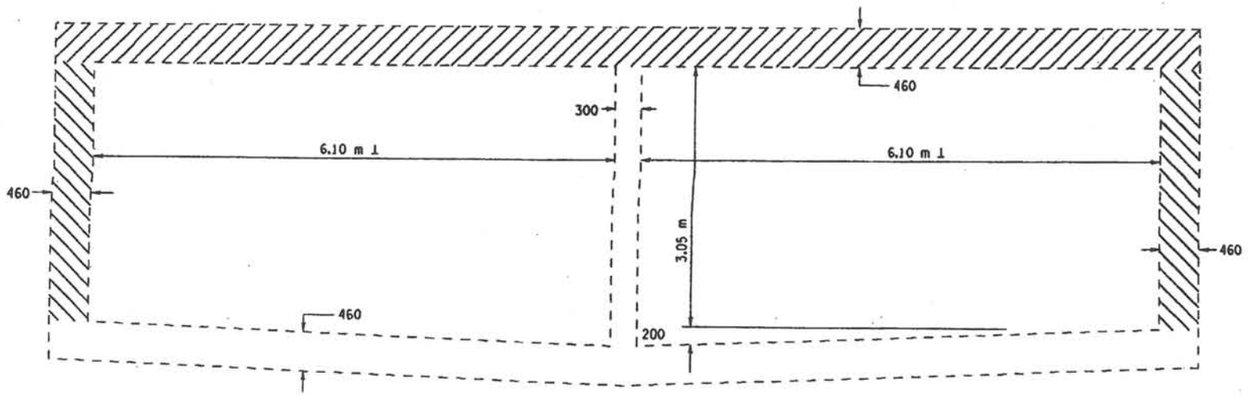

BLANKET CROSS SECTION
SHOWING REPAIR ITEM REGIONS

LEGEND OF REPAIR-ITEM REGIONS

CRACK REPAIR-BY-INJECTION OF PORTLAND CEMENT GROUT- ITEM 11555.8198 M

REMOVAL OF STRUCTURAL CONCRETE-REPLACEMENT WITH CLASS A CONCRETE ITEM 582.05 M

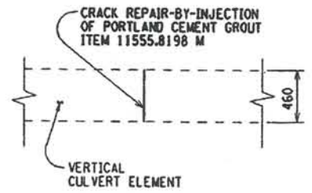

CONSTRUCTION JOINT
REPAIR DETAIL
SECTION C-C
NO SCALE

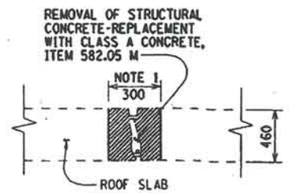

ROOF SLAB DISTRESS CRACK
REPAIR DETAIL
SECTION D-D
NO SCALE

LEGEND

- C-X — CORE LOCATION
- (XX) — PHOTO LOCATION
- DELAMINATION
- SPALLING
- CRACK
- MAP CRACKING
- MOISTURE

SPECIAL NOTE:

ALL STRUCTURAL CONCRETE REMOVAL SHALL BE PERFORMED PRIOR TO CRACK REPAIR BY PORTLAND CEMENT CONCRETE TO PROTECT CURING MATERIAL FROM VIBRATIONS

ALL DIMENSIONS ARE IN mm UNLESS OTHERWISE NOTED

AS BUILT REVISIONS

SIGNATURE DATE

CONCRETE REPAIRS
ELEVATION AND DETAILS

STATE OF NEW YORK
DEPARTMENT OF TRANSPORTATION

FILENAME	REGION	DATE	DRAWING NO.
305612AB.GID	3	10/99	CR-7

FED ROAD REG. NO.	STATE	CONTRACT NO.	SHEET NO.	TOTAL SHEETS
1	N.Y.	D258315	15	22

ROUTE 1-481 OVER BUTTERNUT CREEK
TOWN OF DEWITT
ONONDAGA COUNTY

P.I.N. 3056.12.111 B.I.N. 1044440

LEGEND

- C-X — CORE LOCATION
- (XX) — PHOTO LOCATION
- DELAMINATION
- SPALLING
- CRACK
- MAP CRACKING
- MOISTURE

HEAVY SEEPAGE THRU CRACKS
CRACKS ON CEILING & OPPOSITE PIER WALL LINEUP.

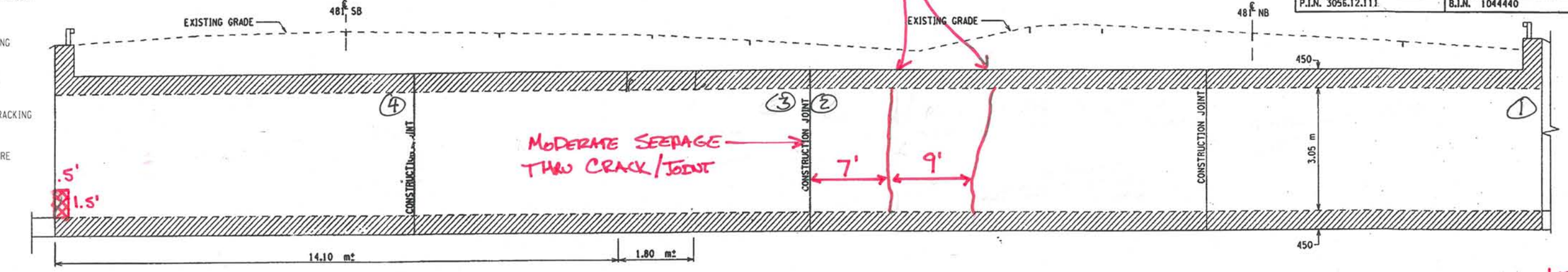

INTERIOR ELEVATION VIEW - PIER END SIDE
SCALE 200:1

RIGHT SIDE

LEFT SIDE

SPAN #2

SPECIAL NOTE:

ALL STRUCTURAL CONCRETE REMOVAL SHALL BE PERFORMED PRIOR TO CRACK REPAIR BY PORTLAND CEMENT CONCRETE TO PROTECT CURING MATERIAL FROM VIBRATIONS

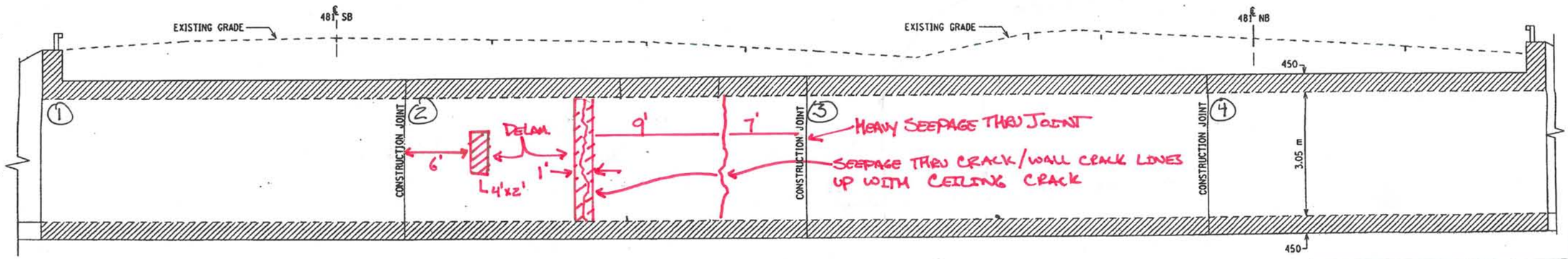

INTERIOR ELEVATION VIEW - PIER BEGIN SIDE
SCALE 200:1

LEFT

RIGHT

SPAN #1

ALL DIMENSIONS ARE IN mm UNLESS OTHERWISE NOTED

AS BUILT REVISIONS

SIGNATURE DATE

CONCRETE REPAIRS
ELEVATIONS

STATE OF NEW YORK
DEPARTMENT OF TRANSPORTATION

FILENAME	REGION	DATE	DRAWING NO.
305612AB.G1D	3	10/99	CR-2

ESTIMATED BY
CHECKED BY
DESIGNED BY
JOB MANAGER
DESIGN SUPERVISOR

FILENAME = g:\proen\wbcad\data\305612ab\305612ab.g1d
DATE/TIME = 22-OCT-1999 12:12
USER = Mkostaki

FED ROAD REG. NO.	STATE	CONTRACT NO.	SHEET NO.	TOTAL SHEETS
1	N.Y.	D258315	15	22

ROUTE I-481 OVER BUTTERNUT CREEK
TOWN OF DEWITT
ONONDAGA COUNTY

P.I.N. 3056.12.111 | B.I.N. 1044440

LEGEND

- C-X CORE LOCATION
- XX PHOTO LOCATION
- DELAMINATION
- SPALLING
- CRACK
- MAP CRACKING
- MOISTURE

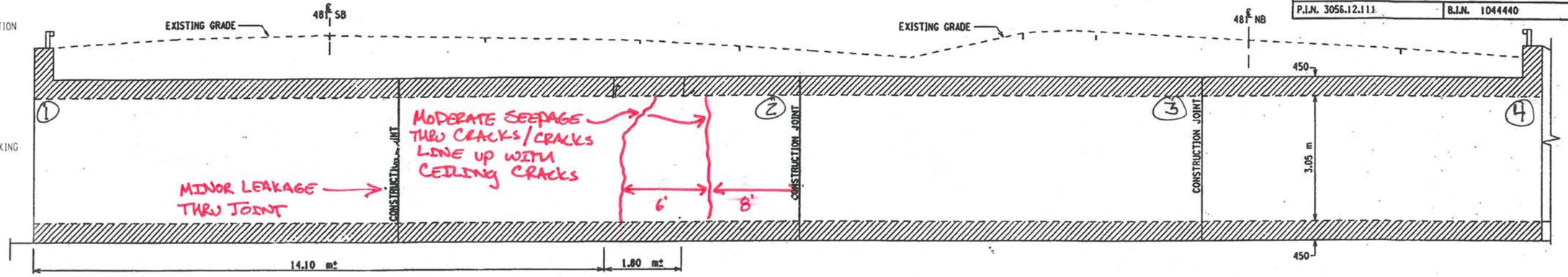

INTERIOR ELEVATION VIEW - NORTH ABUTMENT - END

SCALE 200:1

SPAN #2

SPECIAL NOTE:

ALL STRUCTURAL CONCRETE REMOVAL SHALL BE PERFORMED PRIOR TO CRACK REPAIR BY PORTLAND CEMENT CONCRETE TO PROTECT CURING MATERIAL FROM VIBRATIONS

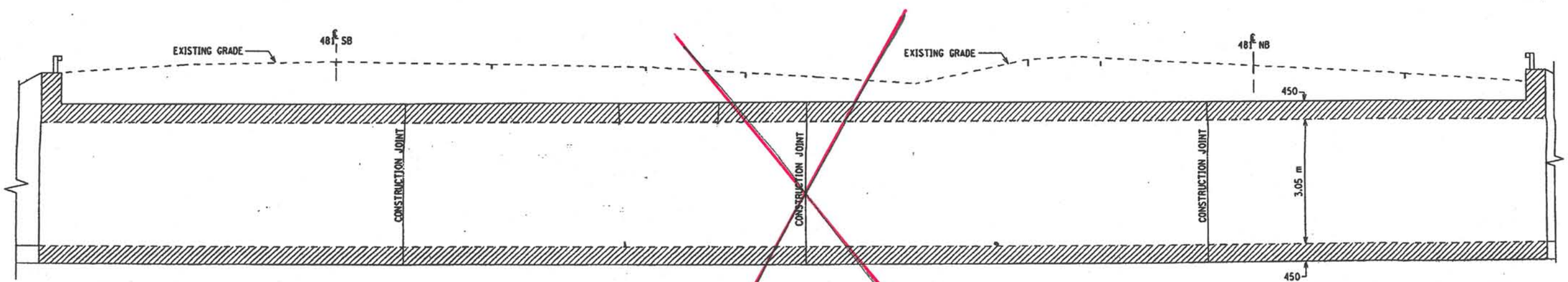

INTERIOR ELEVATION VIEW - PIER

SCALE 200:1

ALL DIMENSIONS ARE IN mm UNLESS OTHERWISE NOTED

AS BUILT REVISIONS

SIGNATURE | DATE

CONCRETE REPAIRS
ELEVATIONS

STATE OF NEW YORK
DEPARTMENT OF TRANSPORTATION

FILENAME	REGION	DATE	DRAWING NO.
305612AB.GID	3	10/99	CR-2

ESTIMATED BY ____ CHECKED BY ____ DESIGNED BY ____ JOB MANAGER ____ DESIGN SUPERVISOR ____

FILENAME = c:\users\mkostaki\...
DATE/TIME = 22-OCT-1999 14:12
USER = Mkostaki

BIN 104440 I 481 OVER BUTTERNUT CREEK

INLET - LEFT SIDE

N ←

GENERAL NOTES:

CONCRETE APPEARS TO BE IN GOOD GENERAL CONDITION WITH ONLY MINOR ISOLATED CRACKING OTHER THAN NOTED.

LEGEND

- C-X — CORE LOCATION
- XX — PHOTO LOCATION
- DELAMINATION
- SPALLING
- CRACK
- MAP CRACKING
- MOISTURE

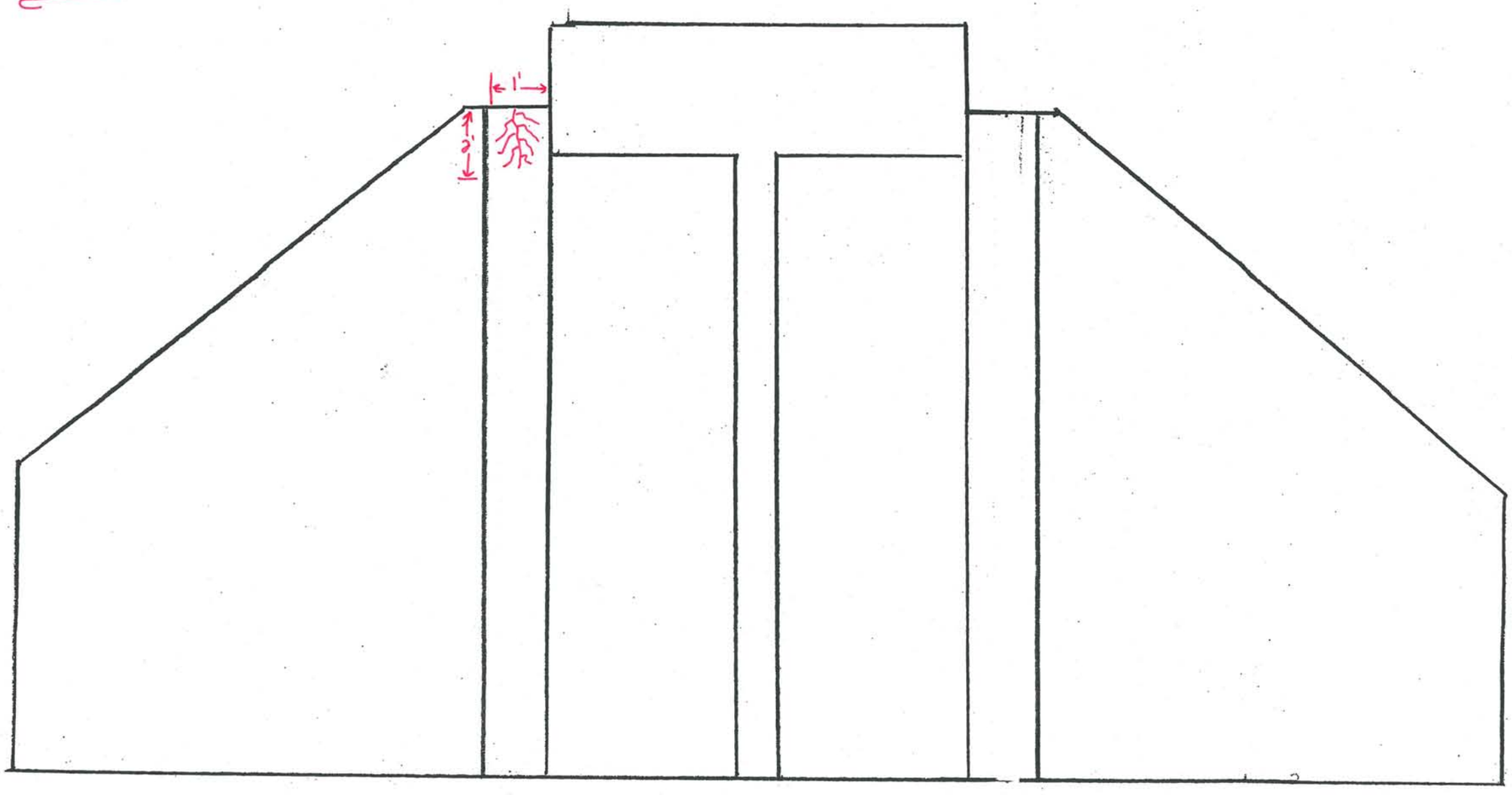

END LT WING

BEGIN LT WING

BOTH INLET & OUTLET HAS LOCALIZED SCOUR. BRIDGE "NOT" BUILT ON PILES. INLET WAS RETROFITTED WITH HEAVY STONE FILL. ALL FOUR WING WALLS HAVE SETTLED WITH WORST BEING BEGINNING RIGHT WHICH HAS TILTED FORWARD.

BIN 104440 I 481 OVER BUTTERNUT CREEK

OUTLET - RIGHT SIDE

→ N

GENERAL NOTES:

CONCRETE APPEARS TO BE IN GOOD GENERAL CONDITION WITH ONLY MINOR ISOLATED CRACKING OTHER THAN LOCATIONS NOTED

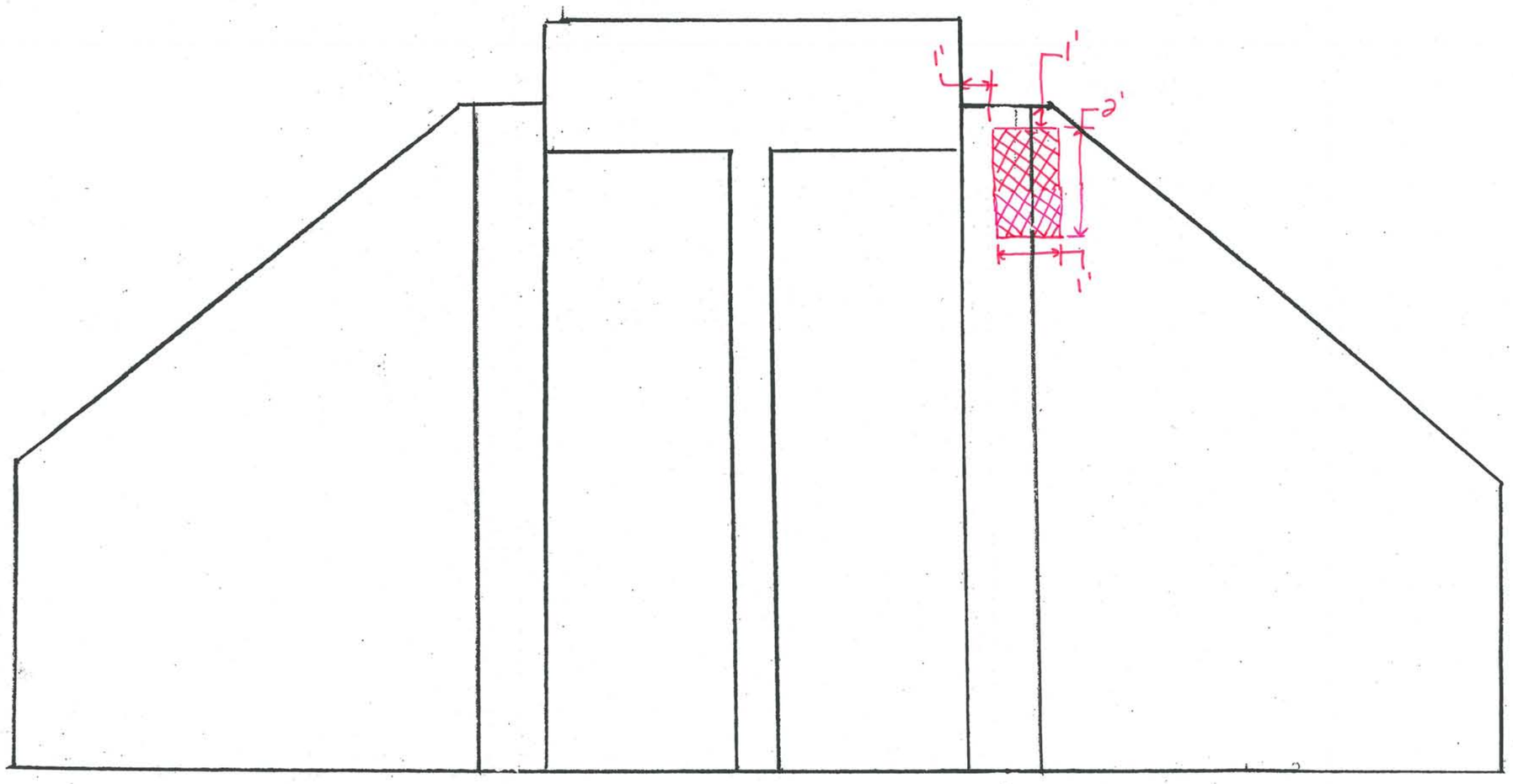

LEGEND

- C-X — CORE LOCATION
- (XX) — PHOTO LOCATION
- DELAMINATION
- SPALLING
- CRACK
- MAP CRACKING
- MOISTURE

BEGIN RT WING

END RT WING

BOTH INLET & OUTLET HAS LOCALIZED SCOUR. BRIDGE "NOT" BUILT ON PILES. INLET WAS RETROFITTED WITH HEAVY STONE FILL. ALL FOUR WING WALLS HAVE SETTLED WITH WORST BEING BEGINNING RIGHT WHICH HAS TILTED FORWARD.

IN-DEPTH PHOTO DOCUMENTATION



DESCRIPTION: ELEVATION LEFT

PHOTO 1



DESCRIPTION: ELEVATION RIGHT

PHOTO 2



DESCRIPTION: BEGIN ABUTMENT AND WING WALL LEFT.

PHOTO 3



DESCRIPTION: BEGIN ABUTMENT CONSTRUCTION JOINT 1&2-SEEPAGE AT TOP SLAB.

PHOTO 4



DESCRIPTION: BEGIN ABUTMENT AND TOP SLAB SECTION 2-TYPICAL SEEPAGE AND DELAMINATION OF EXISTING CONCRETE AND REPAIRS ADJACENT TO CRACKING. **PHOTO 5**



DESCRIPTION: BEGIN ABUTMENT AND TOP SLAB-SEEPAGE AND DELAMINATION AT CONSTRUCTION JOINT BETWEEN SECTIONS 2&3 AND INTERMITENT SECTION 2 CRACKS. **PHOTO 6**



DESCRIPTION: BEGIN ABUTMENT CONSTRUCTION JOINT BETWEEN SECTIONS 3&4.

PHOTO 7



DESCRIPTION: BEGIN ABUTMENT SECTION 4 RIGHT-MINOR SEEPAGE.

PHOTO 8



DESCRIPTION: BEGIN WING WALL RIGHT-SETTLEMENT GAP BETWEEN ABUTMENT AND WING WALL APPROX. 1 INCH.

PHOTO 9



DESCRIPTION: BEGIN PIER LOOKING RIGHT TO LEFT-SECTION 3&4 CONSTRUCTION JOINT.

PHOTO 10



DESCRIPTION: BEGIN PIER JOINT SECTIONS 2&3-SEEPAGE AT JOINT AND CRACK IN SECTION 2.

PHOTO 11



DESCRIPTION: BEGIN PIER AND TOP SLAB-CRACK WITH SEEPAGE AND ADJACENT DELAMINATION-TYPICAL THROUGHOUT SECTION 2.

PHOTO 12



DESCRIPTION: BEGIN PIER CONSTRUCTION JOINT SECTIONS 1&2. NOTE DELAMINATION AND CRACKING IN SECTION 2.

PHOTO 13



DESCRIPTION: BEGIN PIER LEFT SECTION 1.

PHOTO 14



DESCRIPTION: END PIER SECTION 4 RIGHT- DELAMINATION LOWER CORNER AT FASCIA.

PHOTO 15



DESCRIPTION: END PIER SECTION 3&4 JOINT.

PHOTO 16



DESCRIPTION: END PIER SECTION 2&3 JOINT-WALL AND TOP SLAB SEEPAGE AT JOINT AND SECTION 2 CRACK .

PHOTO 17



DESCRIPTION: END PIER SECTION 1&2 JOINT-WALL AND TOP SLAB SEEPAGE AT JOINT AND SECTION 2 CRACK.

PHOTO 18



DESCRIPTION: END PIER SECTION 1 LEFT.

PHOTO 19



DESCRIPTION: END ABUTMENT WING WALL LEFT.

PHOTO 20



DESCRIPTION: END ABUTMENT SECTION 1 LEFT.

PHOTO 21



DESCRIPTION: END ABUTMENT WALL AND TOP SLAB JOINT SECTIONS 1&2. SEEPAGE ALONG TOP SLAB.

PHOTO 22



DESCRIPTION: END ABUTMENT SECTION 2-CRACKING WITH SEEPAGE.

PHOTO 23



DESCRIPTION: END ABUTMENT SECTION 2&3 JOINT-SEEPAGE AT JOINT AND SECTION 2 CRACK. TOP SLAB SEEPAGE AND DELAMINATION.

PHOTO 24



DESCRIPTION: END ABUTMENT SECTION 3&4 JOINT.

PHOTO 25



DESCRIPTION: END ABUTMENT AND WING WALL RIGHT.

PHOTO 26



DESCRIPTION: END ABUTMENT AND WING WALL JOINT RIGHT – WING WALL SETTLING-DELAMINATION AND SPALLING.

PHOTO 27



DESCRIPTION: RIGHT FASICA -TYPICAL.

PHOTO 28

BIN: 1044440 - I-481 over Butternut Creek

PHOTO LOCATION PLAN

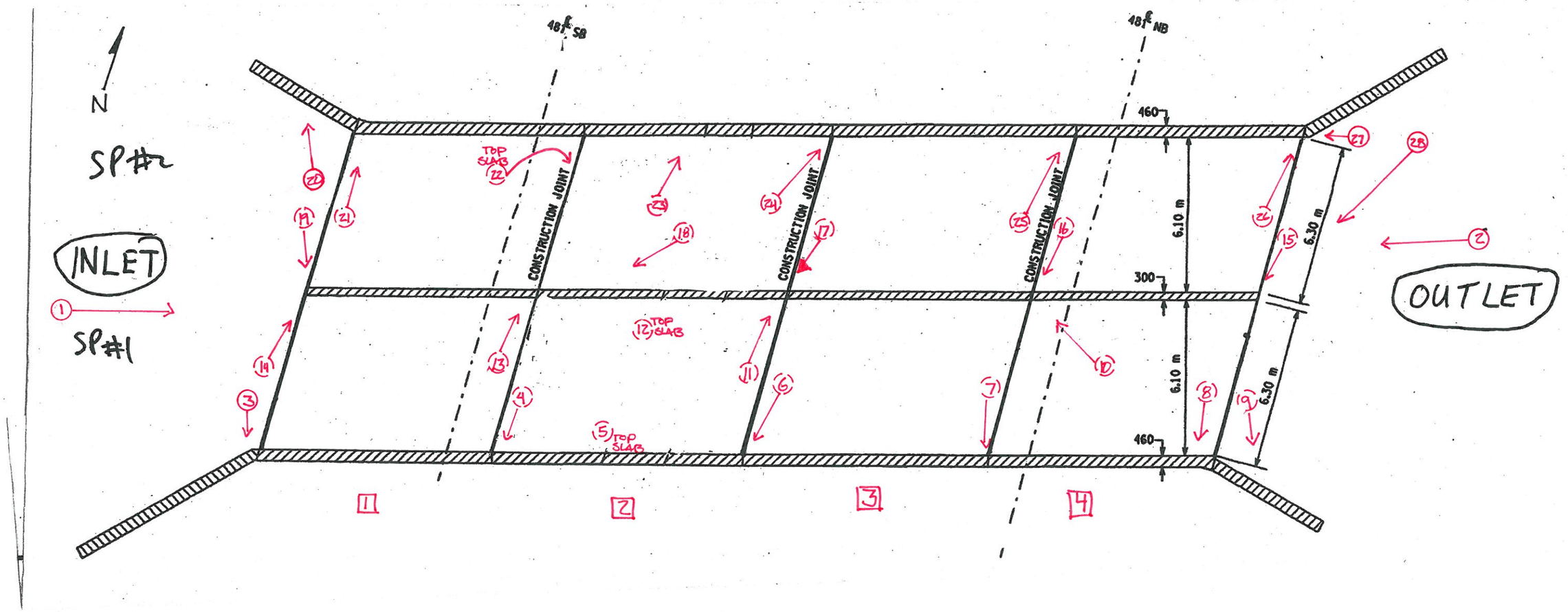

ASBESTOS DOCUMENTATION

ASBESTOS DOCUMENTATION FROM WATTS ARCHITECTURE & ENGINEERING, INC.

IN-DEPTH INSPECTION REPORT

D031085 P.I.N. 3501.60

B.I.N. 1049659

TEAM LEADER	Bruce Opalka, P.E.	60413
		NYSPE LICENSE #

ASSISTANT TEAM LEADER	Charles Brooks, P.E.
ASSISTANT TEAM LEADER	Mike Rode
ASSISTANT TEAM LEADER	Dustin Trivisonno

FEATURE CARRIED	I - 690
FEATURE CROSSED	Hiawatha Blvd

DATE FIELD WORK BEGAN	January 13,2014
DATE FIELD WORK COMPLETED	January 14, 2014

TABLE OF CONTENTS

- TP 349 & 350
- IN-DEPTH CONDITION DOCUMENTATION
- IN-DEPTH PHOTO DOCUMENTATION
- ASBESTOS REPORT

TP 349 & TP 350

BRIDGE ELEMENT RATINGS

Inspection Date: 6/22/2012 RC: 33 BIN: 1049659

Bridge Ratings

Carried: 690I 690I33012008 Crossed: HIAWATHA BOULEVRD CheckValue: 1,781,555,150

Inspection Agency: 10 - NYSDOT Type of Inspection: 1 - BIENNIAL
GTMS: 302 -- Steel - Stringer/Multi-Beam or Girder
POSTINGS: See Gen Rec Page 1 for Postings at time of inspection.
Further Investigation Needed: No
State Highway Number: 54-16 Milepoint: 7.13 AADT/Yr: 72634 / 2002
Orientation: 4 - Southeast Political Unit: 2055 - City of SYRACUSE Year Built: 1958
Total Spans: 3 Ramp Bridge Attached To Span: NA BIN: NA
General Recommendation: 5 Computed Condition Rating: 5.234

Abutment Ratings:	Beg Abut	End Abut
Joint with Deck	6	6
Bearings, Bolts, Pads	7	7
Seats and Pedestals	7	7
Backwall	5	6
Stem (Breastwall)	8	8
Erosion or Scour	5	5
Footings	5	5
Piles	9	9
Recommendation	6	6

Wingwall Ratings:	Beg Abut	End Abut
Walls	6	6
Footings	9	9
Erosion or Scour	6	6
Piles	9	9

Channel Ratings:	Channel
Stream Alignment	8
Erosion and Scour	8
Waterway Opening	8
Bank Protection	8

Approach Ratings:	Approaches
Drainage	5
Embankment	5
Settlement	5
Erosion	5
Pavement	5
Guide Railing	5

Number of Flags Issued:

RED: 0 Yellow: 0 Safety: 0

Vulnerability Reviews Recommended: 1=Yes, 2=No, 3=NA, X=NotActive

Hydraulic: 3	Overload: X	Steel: 2
Collision: 2	Concrete: X	Seismic: X

Inspector's Signature: CheckValue: 1,781,555,150 Date: 6/22/2012

Bruce Opalka,PE () (Inspector ID:3000038)

Signed copy of this inspection report is available in the appropriate NYSDOT Regional Office

Reviewed By: Date: 8/8/2012

James R. Manning,PE () (QC ID:3000023)

Signed copy of this inspection report is available in the appropriate NYSDOT Regional Office

Inspection Date: 6/22/2012 RC: 33 BIN: 1049659

Span Ratings

Carried: 690I 690I33012008 Crossed: HIAWATHA BOULEVRD CheckValue: 1,781,555,150

Deck Element Ratings:	001	002	003
Wearing Surface	5	5	5
Curbs	5	5	5
Sidewalks, Fascias	6	6	6
Railings, Parapets	5	5	5
Scuppers	8	8	8
Gratings	8	8	8
Median	7	7	7
Mono Deck Surface	5	5	5

Superstructure Ratings:	001	002	003
Structural Deck	5	4	5
Primary Members	5	5	5
Secondary Members	5	5	5
Paint	4	4	4
Joints	6	6	8
Recommendation	5	5	5

Pier Ratings:	001	002	003
Bearings, Bolts, Pads	7	7	8
Pedestals	6	6	8
Top of Cap or Beam	5	5	8
Stem Solid Pier	8	8	8
Cap Beam	5	5	8
Pier Columns	5	5	8
Footings	9	9	8
Erosion or Scour	6	6	8
Piles	9	9	8
Recommendation	5	5	8

Utility Ratings:	001	002	003
Lighting	5	8	6
Sign Structure	8	8	8
Utilities and Support	8	8	8

Field Notes:

Field Date	Arrival	Departure	Temp (C)	Temp (F)	Weather Conditions
6/21/2012	1:00:00 PM	3:00:00 PM	35	95	sunny
6/22/2012	11:00:00 AM	12:00:00 PM	24	75	Overcast

IN-DEPTH CONDITION DOCUMENTATION

IN DEPTH INSPECTION REPORT

BIN 1069090

- **In-Depth Condition:**

Visual Inspection: Miscellaneous concrete repairs were made to the abutments and piers in 2005 under contract D259742.

Cracks, spalls, and other field observations are shown on the plans. Below is a brief summary of conditions for each feature.

Superstructure

- **Deck –** See Bridge Deck Evaluation Report.
- **Steel –** See Structural Steel Inspection Summary.
- **Bearings –** All expansion bearings (spherical) appear in good working order, however, they are closer to the right keeper plate than the left. This is the inside side of the curved girder. There is some minor rust on a few fascia bearings. The fixed bearings (spherical - piers 2 & 4) also appear in good working order with minor rust buildup on them.

Substructure

- **West Abutment (Begin) –** Some cracking with shallow spalling for 3' high between pedestals 2 & 3 in the backwall. Light delaminations in same area between pedestals 3 & 4. Thin full height crack behind pedestal 4. Right cheek wall is spalled to 6" deep at the top front face with hollowness on the outside wall 6" W by 4' H.

  Pier #1 – Pier is overall in good condition except for a single for 2' H by 3' W area on the beginning face which has a minor spall with swallow delamination around it.

  Pier #2 – Seepage from road splash on the low side (right) has led to staining of the concrete with a cracked fascia pedestal and spot areas of delaminations on the bottom side of the hammerhead capbeam. Minor spalls with localized delaminations on pedestals 2,3, & 4 and just below on the capbeam on both faces.

Pier #3 – Pier #3 is the only pier with a joint and there is extensive map cracking with efflorescence build up on the pedestals, capbeam, and column. Some minor cracking with localized delamination below pedestal 4, beginning face, and on and below pedestal 2 & 3 on the end face.

Pier #4 – The pier is basically sound and solid.

East Abutment (End) – There is heavy staining with efflorescence build up which runs down the backwall over the pedestals and down the stem at pedestals 1,2, & 5. A single spall measuring 18" W by 18" H by 8" deep in top right corner of backwall. Mapcracking on abutment from pedestal 1 to pedestal 2 and between pedestals 3 & 4.

STRUCTURAL STEEL INSPECTION SUMMARY

BIN 1049659

Special Emphasis Inspection Required

Non-Redundant/Fracture Critical Members – No
Pin and Hangers – No
Fatigue-Prone Welds – Yes
Non-Categorized Fatigue-Prone Details – No
Other (Specified in Text) – No

Special Emphasis Details:

Partial length cover plates. Safe life had exhausted when analyzed in 1996.

Overall Steel Condition:

Right fascia of Span #2 suffered an impact at the third diaphragm from the joint which places it near midspan. A repair was made and a outward bulge of 1-2" in the web still remains which measures approx. 36"W by 30"H. Pockets of section loss occur as detailed below.

Paint: Paint has failed along edges of all girders and webs of fascia girders. There are pockets of total paint loss at pier joints adjacent longitudinal joint and pier fascia ends

Section Loss: There are localized pockets of section loss starting with girder:
G-1 over pier #1; spans #1 & #2, webs and both flanges have +/- 10% loss for first and last 6" of girder. G-8 over pier #1; span #2; web's top 6" for first 3" has +/-10% loss as does the top flange for first 12". G-8 over pier #2; span #2, web and flanges have 10% loss for last 6". G-14 over pier #1; span #1, bottom flange for last 3' has an average loss of +/- 5%. G-14 over pier #1; span #2, bottom flange for first 5' has an average loss of +/- 5%. G-14 over pier #2; span #2, bottom flange for last 5' has an average loss of +/- 5%. G-14 over pier #2; span #3, bottom flange for first 5' has an average loss of +/- 5%

Site Test: Test performed with calibrated D-Meter.

Location: Bottom flange outside right fascia girder 14 span 1.

Findings:

-Typical as built thickness reading: 0.834 inches
-Thickness at isolated area of heavy loss: 0.678 inches

Photos:


G-14
SP #1
.678
.834

BIN: 1049659

I-690 WESTBOUND

NOTE: GALVANIZING ON BRIDGE RAIL TYPICAL

DECK EVALUATION

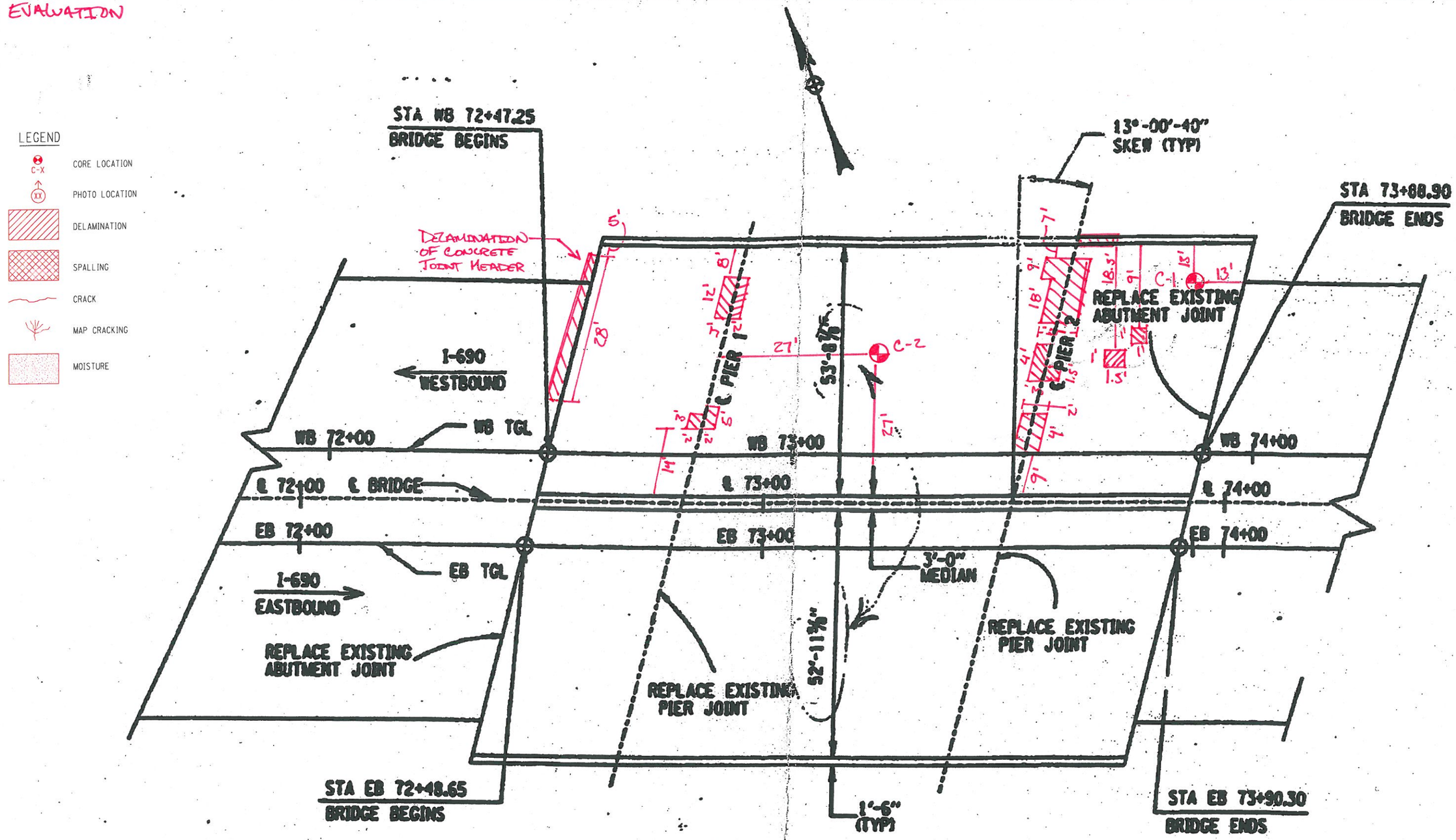

I-690 OVER HIAWATHA BLVD
PLAN VIEW

LEGEND

C-X CORE LOCATION

XX PHOTO LOCATION

DELAMINATION

SPALLING

CRACK

MAP CRACKING

MOISTURE

12.058 m

1690 WB

HOLLOW MEDIAN BARRIER

6'

BEG ABUT

17'

32'

4'

1'

1'

1

12.103 m

24'

10'

4'

2'

1'

2

27'

C-1

27'

3'

1'

18'

1.5'

2.5'

12'

9'

13'

C-2

13'

9'

4'

2'

12'

I690 EB

3

2'

2'

2'

GENERAL NOTES & DETAILS FROM DECK EVALUATION

D256745

FED. ROAD REG. NO.	STATE	FEDERAL AID PROJECT NO.	SHEET NO.	TOTAL SHEETS
1	N.Y.		38	72

INTERSTATE JOINT REPLACEMENT PROJECT
ONONDAGA COUNTY
P.I.N. 3803.63

BIN 1049659
D256745

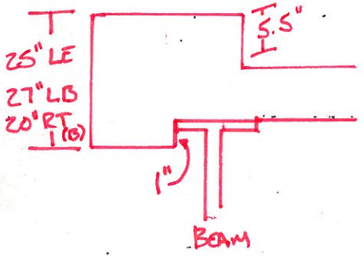

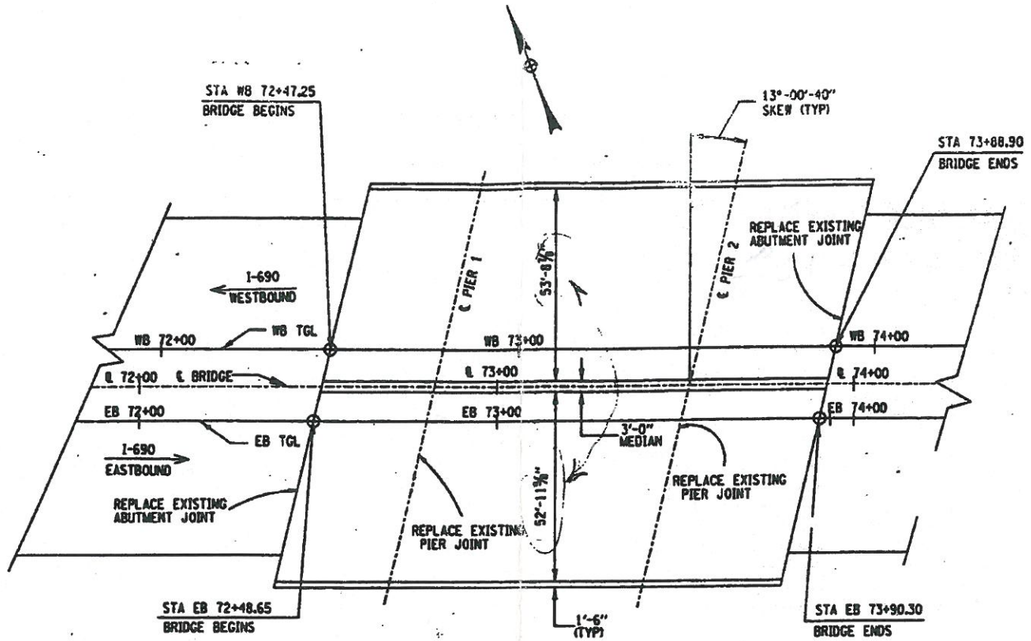

I-690 OVER HIAWATHA BLVD
PLAN VIEW

NOTE:
FOR JOINT INFORMATION
SEE DWG. JT-1 TO DWG. JT-3

4/20/06 B Opalka
5/1/08 Bruce Opalka
4/20/10 DJ Hann

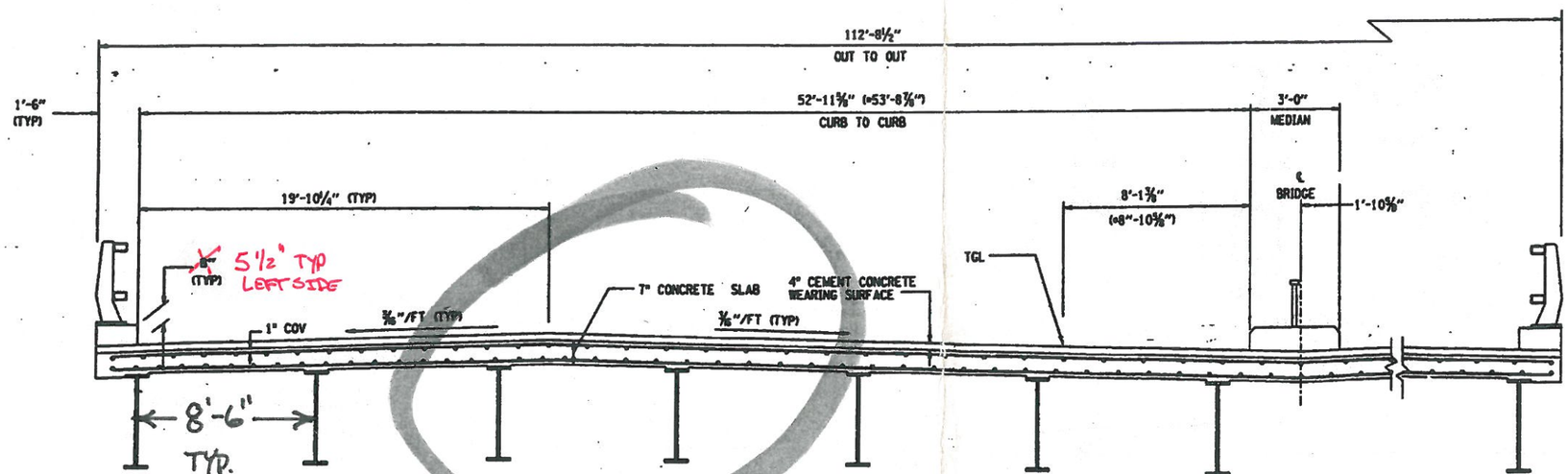

I-690 OVER HIAWATHA BLVD
TRANSVERSE SECTION
EASTBOUND SHOWN, WESTBOUND SIMILAR
(+) -DENOTES WESTBOUND DIMENSIONS

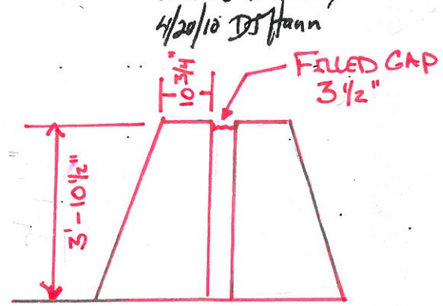

BIN 1049659

Completion 11-30-96

SIGNATURE DATE

PLAN & CROSS SECTION
BIN 1049659

STATE OF NEW YORK
DEPARTMENT OF TRANSPORTATION

DRAWING NO.	SCALE	DATE	REGION	SHEET NO.
B-4	NONE	7/95	3	38

DRAWN BY CADD CHECKED BY ESTIMATED BY CHECKED BY RECORDED BY IN CHARGE OF

FED ROAD REG. NO.	STATE	CONTRACT NO.	SHEET NO.	TOTAL SHEETS
1	N.Y.	D260120	27	44

P.I.N. 3804.69 B.I.N. 1049659

ONONDAGA COUNTY

REHABILITATION OF THREE BRIDGES

MINOR SPALLS

CHECKED BY

DRAFTED BY

ESTIMATED BY

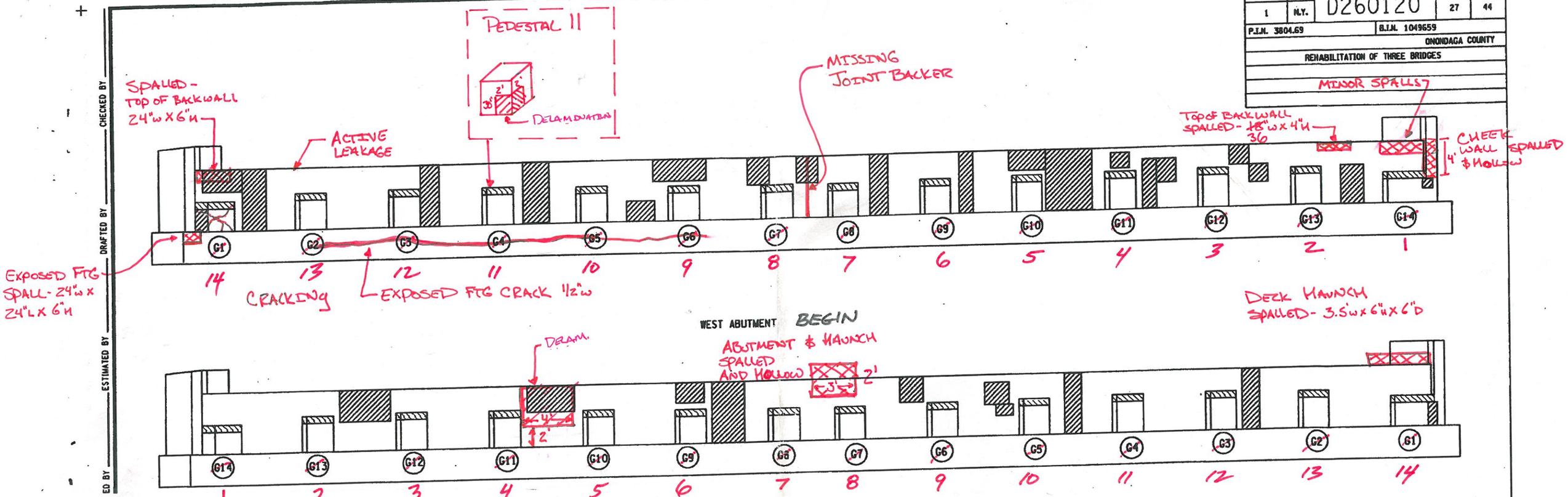

CONCRETE REPAIR AREAS

Abbrevations;

ABUT : abutment
APP : approach
B , Beg : beginning
BB : beginning bearing
EB : end bearing
BF : beginning face
EF : end face
Col : column
D : delamination
Dph: Diaphgram
E : end
Ea : east
H : hollow
J , Jt : joint
P : pier
Ped : pedestal
Sp :span
W : west

LEGEND

- C-X — CORE LOCATION
- XX — PHOTO LOCATION
- DELAMINATION
- SPALLING
- CRACK
- MAP CRACKING
- MOISTURE

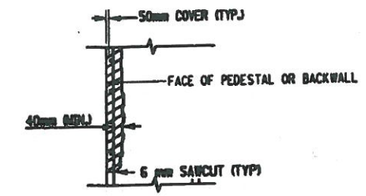

CONCRETE REPAIR DETAIL

AS BUILT REVISIONS

SIGNATURE DATE

I690 OVER HIAWATHA BLVD.

EAST AND WEST ABUTMENT CONCRETE REPAIRS

STATE OF NEW YORK
DEPARTMENT OF TRANSPORTATION
REGION

DOCUMENT NAME	DATE	DRAWING NO.
3804698 A2A.DGN	12/05	ST2-3

RTE 690 OVER HIAWATHA BLVD

FED ROAD REG. NO.	STATE	CONTRACT NO.	SHEET NO.	TOTAL SHEETS
1	N.Y.	D260120	29	44
P.I.N. 380469		B.I.N. 1049659		
ONONDAGA COUNTY				
REHABILITATION OF THREE BRIDGES				

Abbrevations;

ABUT : abutment	E : end
APP : approach	Ea : east
B , Beg : beginning	H : hollow
BB : beginning bearing	J , Jt : joint
EB : end bearing	P : pier
BF : beginning face	Ped : pedestal
EF : end face	Sp :span
Col : column	W : west
D : delamination	
Dph: Diaphgram	

Note: Bearings, pedestals, columns, bays (areas between girders), etc., are numbered from left side of bridge regardless of which direction you are viewing the element.

BOTTOM FACES

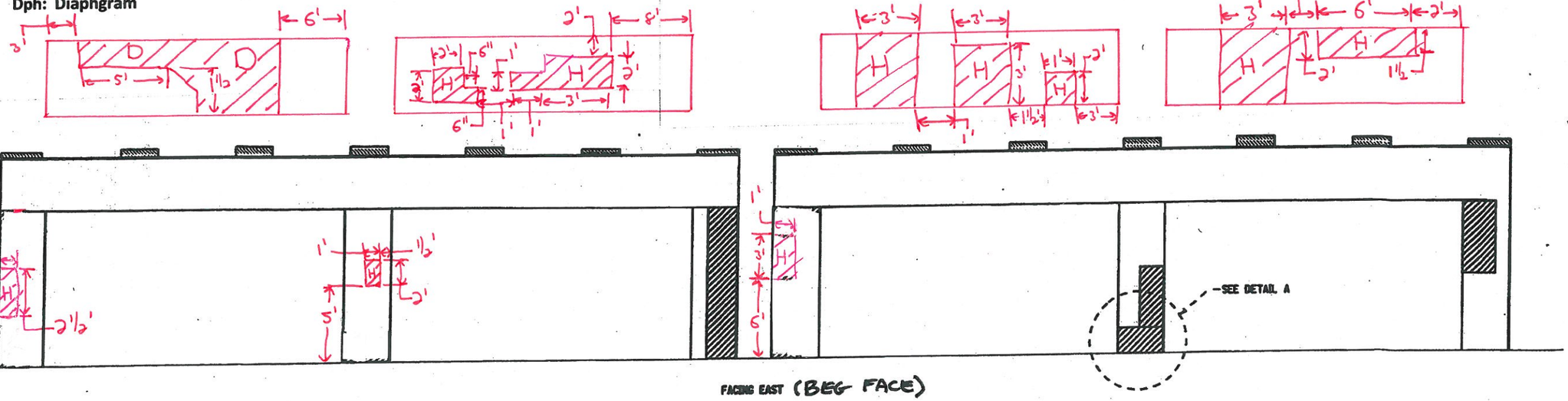

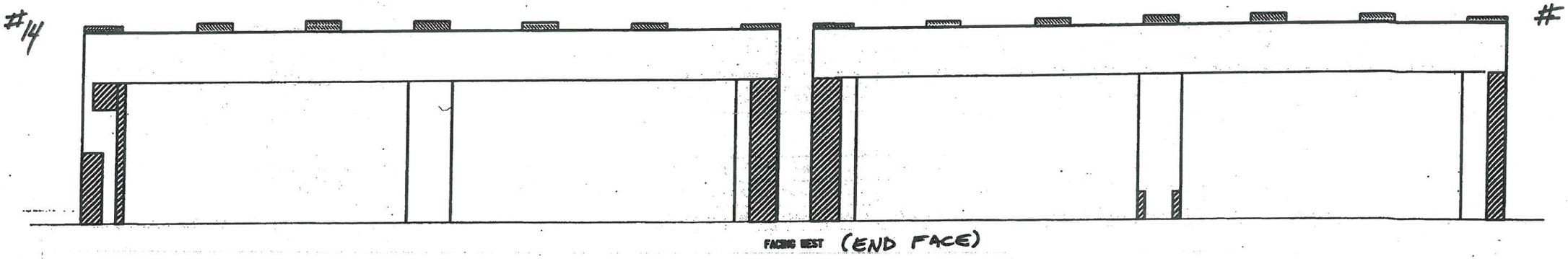

GENERAL NOTES =>

CONCRETE FACE (EAST + WEST) APPEARS TO BE IN GOOD CONDITION WITH MINOR DELAMINATION (TYPICAL)

PEDESTALS => ALL IN GOOD GENERAL CONDITION

BEARINGS => ALL IN GOOD GENERAL CONDITION, TYPICAL SURFACE RUST

PIER #1

LEGEND

- CORE LOCATION (C-X)
- PHOTO LOCATION (XX)
- DELAMINATION
- SPALLING
- CRACK
- MAP CRACKING
- MOISTURE

ALL DIMENSIONS ARE IN mm UNLESS OTHERWISE NOTED

AS BUILT REVISIONS

SIGNATURE DATE

I690 OVER HIAWATHA BLVD

PIER 1
CONCRETE REPAIRS

STATE OF NEW YORK
DEPARTMENT OF TRANSPORTATION
REGION

DOCUMENT NAME	DATE	DRAWING NO.
380469SB_P1A.DGN	12/05	ST2-5

NS.

DRAFTED BY
CHECKED BY
ESTIMATED BY
DESIGNED BY
JOB MANAGER
DESIGN SUPERVISOR

FILE NAME = ny_sheet.dgn
DATE/TIME = 07-FEB-2006 13:05
USER = mrenderson

RTE 690 OVER HIAWATHA BLVD

FED ROAD REG. NO.	STATE	CONTRACT NO.	SHEET NO.	TOTAL SHEETS
1	N.Y.	D260120	30	44

P.I.N. 380469 | B.I.N. 1049659

ONONDAGA COUNTY

REHABILITATION OF THREE BRIDGES

Abbrevations;

ABUT : abutment	E : end
APP : approach	Ea : east
B , Beg : beginning	H : hollow
BB : beginning bearing	J , Jt : joint
EB : end bearing	P : pier
BF : beginning face	Ped : pedestal
EF : end face	Sp :span
Col : column	W : west
D : delamination	
Dph: Diaphgram	

Note: Bearings, pedestals, columns, bays (areas between girders), etc., are numbered from left side of bridge regardless of which direction you are viewing the element.

BOTTOM FACES

#1

#14

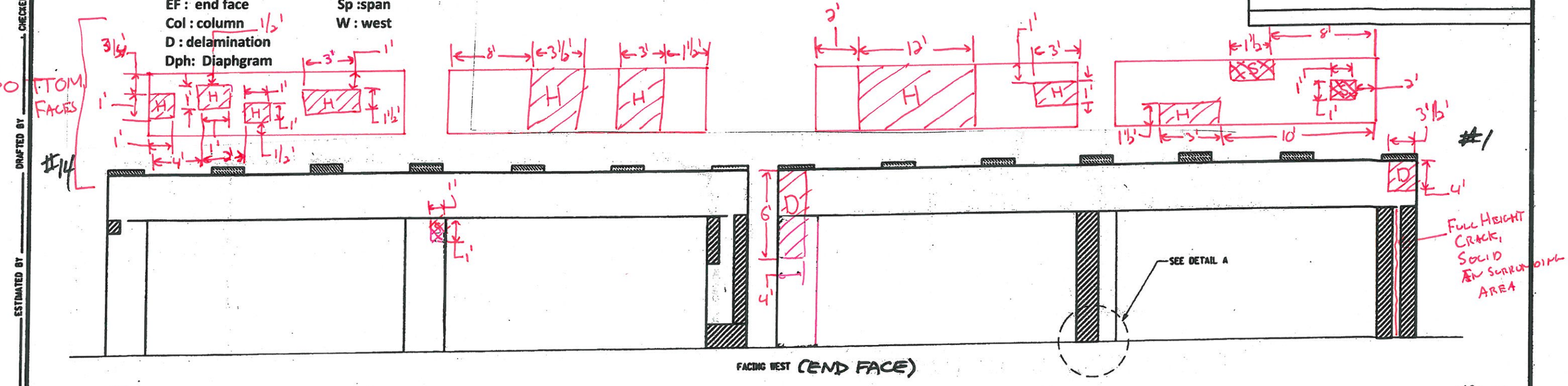

FACING WEST (END FACE)

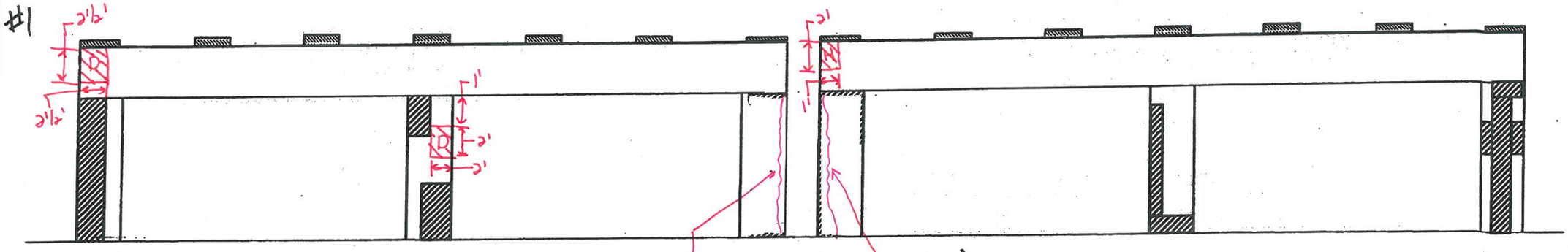

FACING EAST (BEG FACE)

GENERAL NOTES:

- CAP BEAMS => SOLID WITH MINOR SPALLING
- PIERS => GENERALLY GOOD, MINOR SPALLING (SEE ABOVE)
- PEDESTALS => SOLID WITH MINOR SPALLING
- BEARINGS => TYPICAL RUST

PIER #2

LEGEND

- C-X — CORE LOCATION
- XX — PHOTO LOCATION
- DELAMINATION
- SPALLING
- CRACK
- MAP CRACKING
- MOISTURE

ALL DIMENSIONS ARE IN mm UNLESS OTHERWISE NOTED

AS BUILT REVISIONS

SIGNATURE _____ DATE _____

I690 OVER HIAWATHA BLVD

PIER 2
CONCRETE REPAIRS

STATE OF NEW YORK
DEPARTMENT OF TRANSPORTATION
REGION

DOCUMENT NAME	DATE	DRAWING NO.
380469BB_P2A.DGN	12/05	ST2-6

DESIGNED BY _____ CHECKED BY _____

DRAFTED BY _____

ESTIMATED BY _____

JOB MANAGER _____

DESIGN SUPERVISOR _____

Right fascia girder impact damage at 3RD diaphragm from beginning joint.
Repair leaves outward bulge in web 30 " high by 36 " wide.
Opposite side has some warpage to bottom of vertical connection plate.
Minor bend in bottom flange plate.

RTE 690 OVER HIAWATHA BLVD

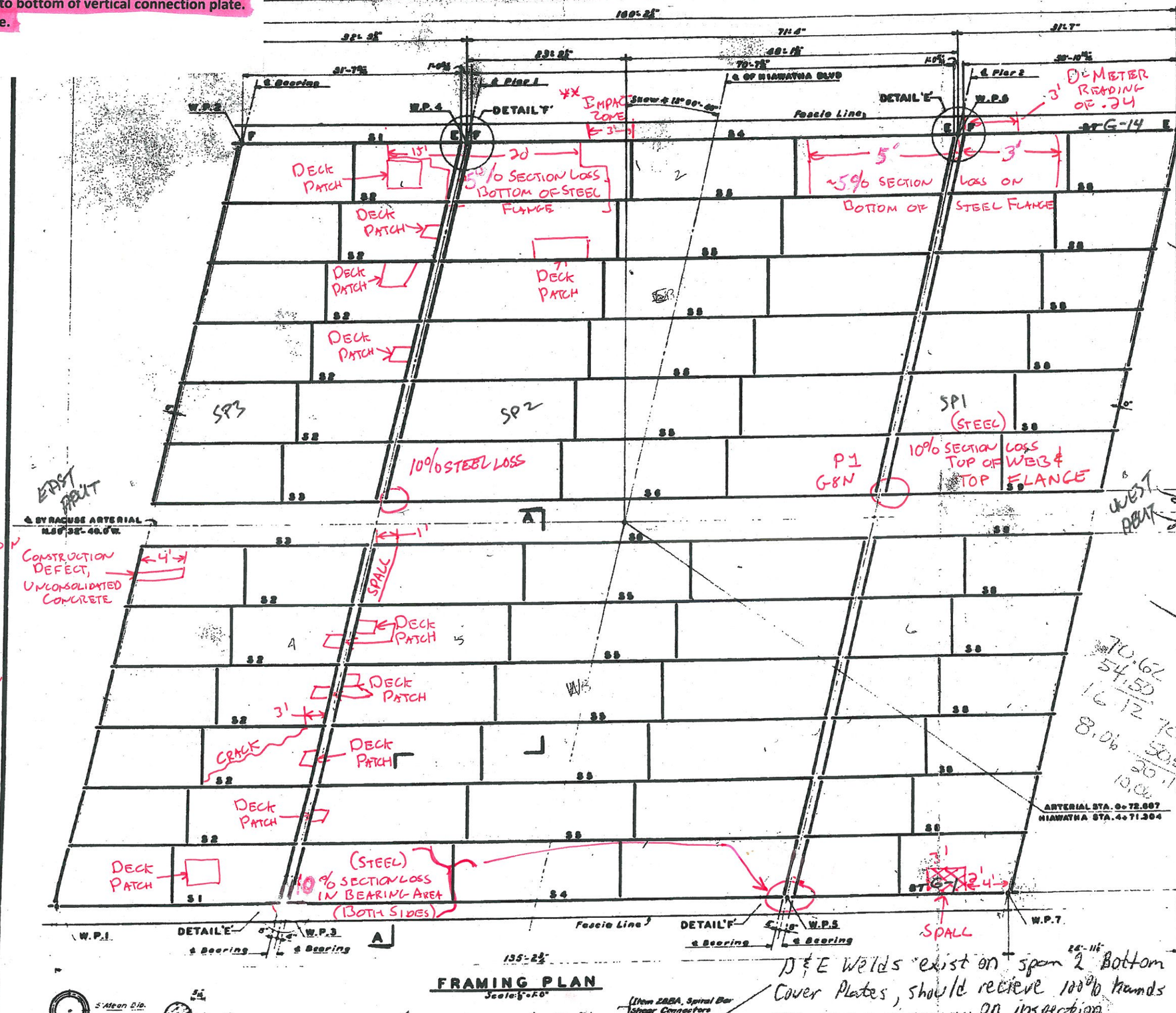



GENERAL DECK NOTE:
CONCRETE IN GOOD CONDITION. ALL PATCHES APPEARED IN GOOD SHAPE.
MINOR DELAMINATION TYPICAL.

JOINT BETWEEN EB AND WB APPEARS IN GOOD CONDITION

NOTE: INTERIOR GIRDERS: <5% LOSS BUT RUSTING (TYPICAL)

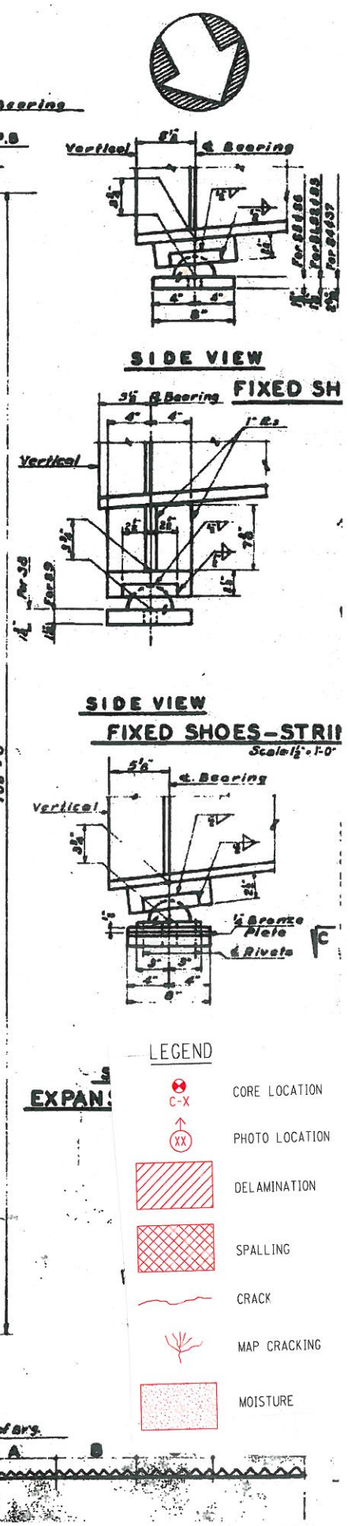

D & E Welds exist on span 2 Bottom Cover Plates, should recieve 100% hands on inspection.

IN-DEPTH PHOTO DOCUMENTATION

BIN 1049659 I-690 OVER HIAWATHA BLVD

IN-DEPTH INSPECTION PHOTO LOCATION SHEET

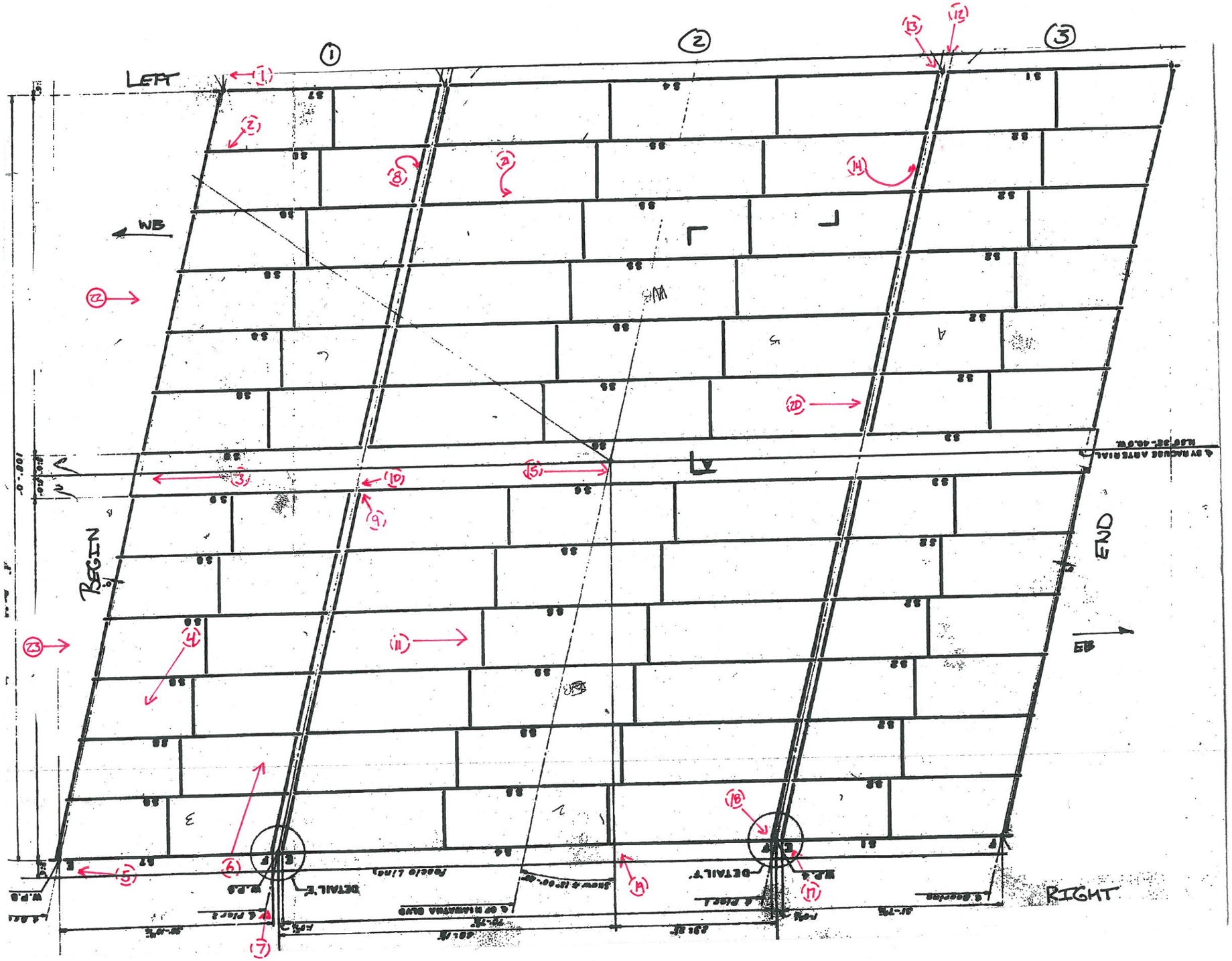

C&S Engineers, Inc.
499 Col. Eileen Collins Blvd.
Syracuse, New York 13212
Phone: (315) 455-2000
Fax: (315) 455-9667
www.cscos.com

I-690 over Hiawatha Blvd – BIN 1049659 [In-Depth]



DESCRIPTION: BEGIN ABUTMENT - BACKWALL LEFT SIDE–DELAMINATION OF BACKWALL AND CHEEK WALL CONCRETE

PHOTO 1



DESCRIPTION: BEGIN ABUTMENT – PEDISTAL & BEARING# 2- TYPICAL CONDITION BEGIN ABUTMENT

PHOTO 2

C&S Engineers, Inc.
499 Col. Eileen Collins Blvd.
Syracuse, New York 13212
Phone: (315) 455-2000
Fax: (315) 455-9667
www.cscos.com

I-690 over Hiawatha Blvd – BIN 1049659 [In-Depth]



DESCRIPTION: BEGIN ABUTMENT –BACKWALL CENTER JOINT MISSING EXPANSION MATERIAL

PHOTO 3



DESCRIPTION: BEGIN ABUTMENT – PEDISTAL # 11- LOOKING RIGHT – DELAMINATION OF CONCRETE ON PEDISTAL AND CRACKING OF STEM FOOTING

PHOTO 4

C&S Engineers, Inc.
499 Col. Eileen Collins Blvd.
Syracuse, New York 13212
Phone: (315) 455-2000
Fax: (315) 455-9667
www.cscos.com

I-690 over Hiawatha Blvd – BIN 1049659 [In-Depth]



DESCRIPTION: BEGIN ABUTMENT –RIGHT CORNER - PEDISTAL DELAMINATION AND SPALLING OF FOOTING.

PHOTO 5



DESCRIPTION: PIER 1-BEGIN FACE-LOOKING RT TO LT.

PHOTO 6

C&S Engineers, Inc.
499 Col. Eileen Collins Blvd.
Syracuse, New York 13212
Phone: (315) 455-2000
Fax: (315) 455-9667
www.cscos.com

I-690 over Hiawatha Blvd – BIN 1049659 [In-Depth]



DESCRIPTION: PIER 1 – PED & BEARING #14-OUTSIDE GIRDER 14-RT, TYPICAL WEATHERING OF FACIA STEEL-BEARINGS IN GOOD CONDITION. LOOKING END TO BEGIN.

PHOTO 7



DESCRIPTION: PIER 1 – UNDERSIDE CAPBEAM-TYPICAL DELAMINATION AND HOLLOW CONCRETE ALL SECTIONS BETWEEN COLUMNS 1 & 2. LOOKING LT TO RT.

PHOTO 8

C&S Engineers, Inc.
499 Col. Eileen Collins Blvd.
Syracuse, New York 13212
Phone: (315) 455-2000
Fax: (315) 455-9667
www.cscos.com

I-690 over Hiawatha Blvd – BIN 1049659 [In-Depth]

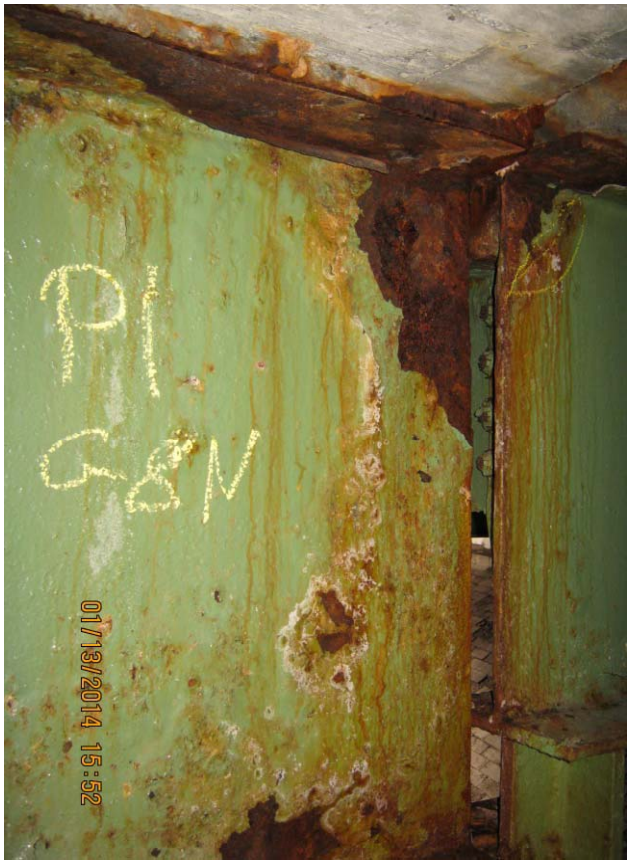

DESCRIPTION: PIER 1 – GIRDER #8 RIGHT-ON PEDISTAL#8-WEATHERING FROM CENTER LINE JOINT SEEPAGE LEFT SIDE.

PHOTO 9



DESCRIPTION: PIER 1-COLUMN 4 END FACE-DELAMINATION

PHOTO 10

C&S Engineers, Inc.
499 Col. Eileen Collins Blvd.
Syracuse, New York 13212
Phone: (315) 455-2000
Fax: (315) 455-9667
www.cscos.com

I-690 over Hiawatha Blvd – BIN 1049659 [In-Depth]



DESCRIPTION: PIER 2 – BEGIN FACE

PHOTO 11



DESCRIPTION: PIER 2- PEDESTAL 1 LEFT – OUTSIDE FACIA.

PHOTO 12

C&S Engineers, Inc.
499 Col. Eileen Collins Blvd.
Syracuse, New York 13212
Phone: (315) 455-2000
Fax: (315) 455-9667
www.cscos.com

I-690 over Hiawatha Blvd – BIN 1049659 [In-Depth]



DESCRIPTION: PIER 2-COLUMN 1- DELAMINATION & CRACK END FACE.

PHOTO 13



DESCRIPTION: PIER 2 – UNDERSIDE CAPBEAM-TYPICAL DELAMINATION AND HOLLOW CONCRETE ON BOTTOM FACE BETWEEN ALL COLUMNS.

PHOTO 14

C&S Engineers, Inc.
499 Col. Eileen Collins Blvd.
Syracuse, New York 13212
Phone: (315) 455-2000
Fax: (315) 455-9667
www.cscos.com

I-690 over Hiawatha Blvd – BIN 1049659 [In-Depth]



DESCRIPTION: UNDERSIDE DECK JOINT BETWEEN EB AND WB DECKS AND SLAB JOINT BETWEEN SPANS 2 & 3. FACING END.

PHOTO 15

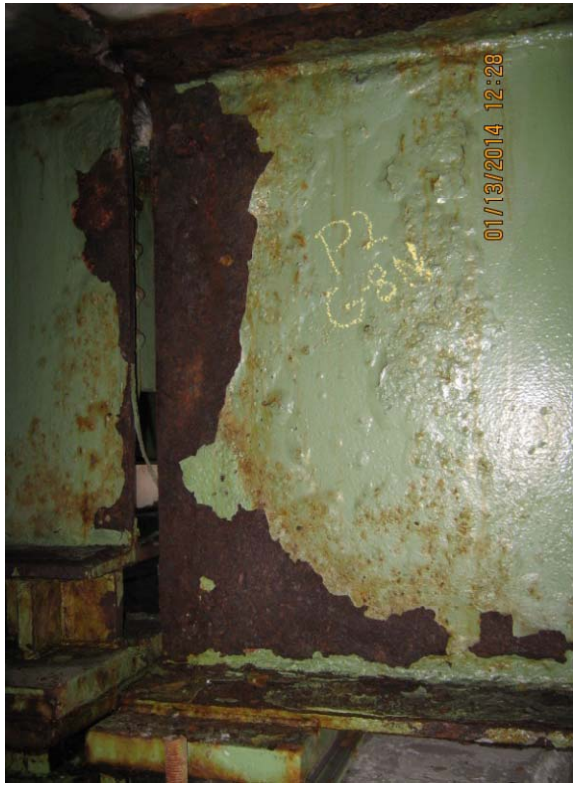

DESCRIPTION: PIER 2 - PEDISTAL 8 – GIRDER 8 LEFT FACE.

PHOTO 16

C&S Engineers, Inc.
499 Col. Eileen Collins Blvd.
Syracuse, New York 13212
Phone: (315) 455-2000
Fax: (315) 455-9667
www.cscos.com

I-690 over Hiawatha Blvd – BIN 1049659 [In-Depth]



DESCRIPTION: PIER 2 – PEDISTAL 14 RIGHT. TYPICAL PEDISTAL IN GOOD CONDITION WITH PIER IN FAIR TO GOOD CONDITION SOME DELAMINATION. END FACE.

PHOTO 17



DESCRIPTION: PIER 2 – PEDISTAL 14 – GIRDER 14 LEFT FACE. WEATHERING OF GIRDER AND BEARING PLATE. BEARING IN GOOD CONDITION.

PHOTO 18

C&S Engineers, Inc.
499 Col. Eileen Collins Blvd.
Syracuse, New York 13212
Phone: (315) 455-2000
Fax: (315) 455-9667
www.cscos.com

I-690 over Hiawatha Blvd – BIN 1049659 [In-Depth]



DESCRIPTION: IMPACT REPAIR TO GIRDER 14 CENTER SPAN RIGHT FASCIA.

PHOTO 19



DESCRIPTION: SPAN #2 -SPALLING UNDERSIDE OF BRIDGE DECK BETWEEN PEDISTAL 6 AND 7 ON PIER 2-LOOKING END OF SPAN.

PHOTO 20

C&S Engineers, Inc.
499 Col. Eileen Collins Blvd.
Syracuse, New York 13212
Phone: (315) 455-2000
Fax: (315) 455-9667
www.cscos.com

I-690 over Hiawatha Blvd – BIN 1049659 [In-Depth]



DESCRIPTION: TYPICAL CONDITION UNDERSIDE OF BRIDGE DECK WITH CRACKING AND SOME SPALLING. BETWEEN GIRDERS 2 AND 3 & PIERS 1 AND 2 LOOKING RIGHT.

PHOTO 21



DESCRIPTION: TYPICAL WB DECK LOOKING FROM BEGIN TO END.

PHOTO 22

C&S Engineers, Inc.
499 Col. Eileen Collins Blvd.
Syracuse, New York 13212
Phone: (315) 455-2000
Fax: (315) 455-9667
www.cscos.com

I-690 over Hiawatha Blvd – BIN 1049659 [In-Depth]



DESCRIPTION: TYPICAL EB DECK LOOKING FROM BEGIN TO END.

PHOTO 23



DESCRIPTION: BRIDGE ELEVATION

PHOTO 24

C&S Engineers, Inc.
499 Col. Eileen Collins Blvd.
Syracuse, New York 13212
Phone: (315) 455-2000
Fax: (315) 455-9667
www.cscos.com

I-690 over Hiawatha Blvd – BIN 1049659 [In-Depth]



DESCRIPTION: TYPICAL WINGWALL

PHOTO 25

DESCRIPTION:

PHOTO

ASBESTOS DOCUMENTATION

ASBESTOS DOCUMENTATION FROM WATTS ARCHITECTURE & ENGINEERING, INC.

ATHENICA
ENVIRONMENTAL SERVICES INC.
Tel (718) 784-7490
Fax (718) 784-4085

BULK (NOB) ASBESTOS ANALYSIS BY POLARIZED LIGHT MICROSCOPY AND TRANSMISSION ELECTRON MICROSCOPY

3

CLIENT: NYS DOT, Region 3
LABORATORY ID #: 04-05-098
DATES OF ANALYSIS: 05/18/04

PROJECT: Bin # 1049659
ANALYT. METHODOLOGIES: ELAP 198.1, ELAP 198.4
DATE OF REPORT: 05/19/04

LABORATORY RESULTS

CLIENT #	LAB. ID #	LOCATION	%ORG	%ASI	%AII	PLM RESULTS	TYPE OF ASBEST.	TEM RESULTS	TYPE OF ASBEST.	POSIT. / NEGAT.
01	04-05-098-01	Steel Paint Coating/G4 @ begin abutment	42.52	0.36	57.12	**ND**	NA	**ND**	NA	**Negat.**
02	04-05-098-02	Steel Paint Coating/G10 @ Pier I (EF)	35.15	11.82	53.03	**ND**	NA	**ND**	NA	**Negat.**
03	04-05-098-03	Steel Paint Coating/G14 @ end abutment	32.95	5.70	61.35	**ND**	NA	**ND**	NA	**Negat.**

ANALYST
E. Dimitrakas

LABORATORY DIRECTOR
Spiro Dongaris

LABORATORY CERTIFICATION NUMBERS: NVLAP 101958, ELAP 10955

- Athenica Environmental Services Inc. (AES), is responsible only for information pertaining to samples taken by its employees.
- Samples will be stored for sixty (60) days. AES Inc., should be notified within this time frame for a true duplicate analysis.
- The report relates only to items tested. This report must not be used to claim product endorsement by NVLAP or any other agency of the U.S. Government. Test reports may not be reproduced except in full and with prior approval of AES Inc.
- The liability of Athenica Environmental Services Inc. with respect to the services charged, shall in no event exceed the amount of the invoice.

ATHENICA
ENVIRONMENTAL SERVICES INC.
45-09 GREENPOINT AVENUE
LONG ISLAND CITY, NY 11104
Tel. (718) 784-7490
Fax. (718) 784-4085

NYS DOT / REG. 3

SITE: BIN # 1049659

PROJECT NO. (ATHENICA FILE#): C003314

DATE: 4/27/~~2003~~ 2004

METHOD OF SHIPMENT: U.S. MAIL

INSPECTOR: W. A. KICK

NUMBER OF SAMPLES: 3

TYPE OF ANALYSIS REQUESTED: [ ] PLM [X] NOB-PLM [X] NOB-TEM [ ] OTHERS

TURNAROUND TIME: [ ] 6 HRS [ ] 12 HRS [ ] 24 HRS [X] OTHER HRS

COMMENTS: ATT: CHRISTOPHER ANDERSON
333 E. WASHINGTON ST. SYRACUSE, N.Y. 13202

HOM. AREA	SAMLPLE #	SAMPLE DESCRIPTION	SAMPLE LOCATION	FIELD COMMENTS	LABORATORY RESULTS		
					PLM	PLM-NOB	TEM-NOB
1049659	01	STEEL PAINT COAT	G4 @ Beg Abut				
↓	02	"	G10 @ Pier I (EF).				
↓	03	"	G14 @ End Abut				

TRANSMITTAL OF RESULTS :
[X] STANDARD
[ ] TELEPHONE RESULTS TO
[ ] FAX RESULTS TO

TELEPHONE # : (315) 428-4628
FAX # :

BATCH # : 04-05-098

CHAIN OF CUSTODY RECORD

RELINQUISHED BY :	W A Kick	DATE :	5/6/~~2003~~ 2004	TIME :	10 AM
RECEIVED BY :	FEDEX	DATE :	5/9/2004	TIME :	
ANALYST :	G. Simmons	DATE :	5/18/2004	TIME :	

LABORATORY ACCREDITATION :
NVLAP# 101958 ELAP# 10955

NEW YORK STATE
DEPARTMENT OF TRANSPORTATION
D031085 P.I.N 3501.60

LEVEL 1 LOAD RATING
B.I.N. 1049659
I-690 over Hiawatha Boulevard

LOAD RATING SUMMARY TABLE (LOAD FACTOR)					
CONTROLLING MEMBER	**CONTROLLING PARAMETER**	**LIVE LOAD**	**LIVE LOAD TYPE**	**INVENTORY RATING**	**OPERATING RATING**
SPAN 2 EXTERIOR GIRDERS (S4)	SERVICE	HS20-44	Axle Load	HS 24.9 (44.8 TONS)	HS 41.5 (74.8 TONS)
SPAN 3 INTERIOR GIRDERS (S2)	SERVICE	ALTERNATE MILITARY LOADING	Axle Load	1.463 (35.1 TONS)	2.443 (58.6 TONS)

DOES NOT INCLUDE FUTURE WEARING COURSE

ANALYSIS METHOD:LOAD FACTOR

RECOMMENDED POSTING AS-IS CONDITION: _____ Tons __X__ None

CALCULATED BY:

STATE OF NEW YORK JESSICA S. BAUER LICENSED PROFESSIONAL ENGINEER No. 084915

DATE: 06/16/14

QUALITY ASSURANCE BY:

STATE OF NEW YORK PAUL F. BYRNE LICENSED PROFESSIONAL ENGINEER 055928

DATE: 06/16/14

C&S COMPANIES®

499 Col. Eileen Collins Blvd.
Syracuse, NY 13212
phone 315-455-2000
fax 315-455-9667
www.cscos.com

ENGINEERS
DESIGN BUILD
TECHNICAL RESOURCES
OPERATIONS

C&S Companies

C&S Engineers, Inc.
Syracuse Hancock International Airport
Syracuse, NY 13212
phone 315-455-2000
fax 315-455-9667
www.cscos.com

TECHNICAL MEMORANDUM

TO: FILE (190.514.001)

FROM: JESSICA S. BAUER, P.E.
NYSPE 084915

DATE: FEBRUARY 5, 2014

C&S PROJECT NO.: 190.514.001

RE: SEISMIC ASSESSMENT SUMMARY
NEW YORK STATE DEPARTMENT OF TRANSPORTATION
D031085; PIN 3501.60; I-81

BIN: 1049659 Seismic Assessment

This memorandum summarizes the seismic assessment conducted for BIN 1049659 as part of the Interstate 81 Project in Syracuse, NY. The purpose of the assessment is to determine if seismic retrofits are warranted at the superstructure to substructure connection, and if further seismic evaluation of the structure is required. This memorandum will give the assessment results, retrofits required and recommendations for further seismic evaluation of the structure.

ASSESSMENT PROCEDURE

The seismic assessment was performed in accordance with the FHWA Seismic Retrofitting Manual for Highway Structures: Part 1 - Bridges, January 2006. As per the referenced manual, seismic assessment was performed for both lower level and upper level earthquake ground motion. The lower level earthquake ground motion has a reasonable likelihood of occurrence within the life of the bridge (50% probability of exceedance within a 75 year bridge life). The upper level earthquake ground motion has a finite likelihood of occurrence within the life of the bridge (7% probability of exceedance within a 75 year bridge life).

Values for the spectral acceleration for the Syracuse area used in the assessment are as follows:

- Lower Level Earthquake Ground Motion for a Short Period (0.2 seconds): $S_S = 0.0251$
- Lower Level Earthquake Ground Motion for a Long Period (1.0 seconds): $S_1 = 0.0076$
- Upper Level Earthquake Ground Motion for a Short Period (0.2 seconds): $S_S = 0.139$
- Upper Level Earthquake Ground Motion for a Long Period (1.0 seconds): $S_1 = 0.047$

These values are considered constant and are the same for all seismic assessments of bridges in the Syracuse area.

The Site Class is based on the soil conditions at the bridge location. It was determined that this parameter has little effect on the results of the seismic assessment because the spectral

You created this PDF from an application that is not licensed to print to novaPDF printer (http://www.novapdf.com)

acceleration values for the Syracuse area are small. Based on this, a site class of D was used for all seismic assessments of bridges in the Syracuse area.

Bridge parameters used in the seismic assessment were retrieved from the record drawings and WinBolts data.

The seismic assessment takes into account the anticipated service life, importance, and the seismic exposure of the bridge to determine a seismic retrofit category (SRC). The SRC is then used to determine seismic evaluation methods and retrofit measures. There are four SRCs, A through D. Seismic retrofit category A is the lowest category; bridges in this category do not require retrofits or further seismic evaluation. Seismic retrofit category D is the highest category; bridges in this category requiring the most rigorous seismic evaluations and retrofits.

ASSESSMENT RESULTS

The SRC for the bridge is "**C**" for lower level earthquake ground motion and "**B**" for upper level earthquake ground motion.

RETROFITS REQUIRED

Bearing replacements are not required at the abutments and piers. Seat width improvements are required at the begin and end abutments. Additional retrofits may be required if further seismic evaluation is needed.

RECOMMENDATIONS FOR FURTHER SEISMIC EVALUATION

For the lower level earthquake ground motion, it is recommended that capacity/demand ratios for bridge components are calculated as per Section 5.4 of the referenced manual. For the upper level earthquake ground motion, it is recommended that the capacities of the bearings are checked as per Section 5.2 of the referenced manual.

Retrofit cost estimates will be provided after any further required seismic evaluations are completed.

You created this PDF from an application that is not licensed to print to novaPDF printer (http://www.novapdf.com)

ENGINEERS
DESIGN BUILD
TECHNICAL RESOURCES
OPERATIONS

C&S Companies

C&S Engineers, Inc.
Syracuse Hancock International Airport
Syracuse, NY 13212
phone 315-455-2000
fax 315-455-9667
www.cscos.com

TECHNICAL MEMORANDUM

TO: **FILE (190.514.001)**

FROM: **PAUL BYRNE, P.E.**
NYSPE 055928

DATE: **JUNE 14, 2014**

C&S PROJECT NO.: 190.514.001

RE: **NEW YORK STATE DEPARTMENT OF TRANSPORTATION**
D031085; PIN 3501.60; I-81 Opportunities, BIN 1049659 Fatigue Evaluation

---

This memorandum documents a fatigue evaluation conducted for the existing Interstate 81 Viaduct Project. Existing structures with AASHTO Category D, E, and E' fatigue-prone details require 100% hands-on inspection unless proven to be exempt. The purpose of the evaluation is to assess the remaining life of fatigue-prone components.

EVALUATION PROCEDURES

The fatigue evaluation was performed in accordance with the AASHTO Guide Specification for Fatigue Evaluations of Existing Steel Bridges, 1990. Fatigue-prone welds identified in the biennial inspection reports were located on record drawings and confirmed visually in the field. Additional information concerning fatigue-prone welds located in BIN folders was also obtained and reviewed prior to inspection.

EVALUATION RESULTS

The results of the fatigue evaluation of the existing bridge are shown below. The remaining safe fatigue life of the fatigue components has been **exhausted**.

Fatigue Detail Location	Remaining Safe Fatigue Life (Years)	Remaining Mean Fatigue Life (Years)
Span 2, Interior Girders S5, End of Bottom Flange Cover Plate	-42.24	-4.56
Span 2, Exterior Girders S6, End of Bottom Flange Cover Plate	-47.27	-29.29

E. Recommendations

The purpose of this deck evaluation is to document and determine existing conditions of the deck. It will be used as a tool for developing the scope of work and cost estimates for the development and comparison of alternatives for the overall project.

The total damaged area is approximately 3% of the total deck area. Due to the age, condition and chloride-ion content of the bridge deck concrete, the bridge deck should be rehabilitated or replaced to meet current design standards and to mitigate excessive future maintenance costs.

Option 1 – Scarify and Bridge Deck Overlay
The maximum service life this option would provide is 25 years. The design life of this project is 30 years (ETC + 30). This option does not meet the project objective of obtaining 30+ years of service life.

Option 2 – Bridge Deck Rehabilitation with 100% Deep Removal
This option will involve partial depth reconstruction with top mat rebar exposure of the entire bridge deck to remove the chloride contaminated concrete (100% deep removal). The existing bridge deck thickness is 11” with 5 ½” of concrete cover over the top mat of reinforcing. The proposed partial depth reconstruction will provide the standard 9 ½” bridge deck thickness. The existing top mat of reinforcing bars will be removed and replaced to accommodate the standard 3” of concrete cover. The existing 2-rail bridge railing and curbs will be removed and replaced with single-slope concrete barrier on the outside of the bridge. The existing bridge joints will be replaced with new armorless bridge joints. The Level 1 Load Rating for the final condition was found to be acceptable. This option would provide a service life of 35 years to the bridge deck. The construction cost of this option is $ 1.216 million.

Option 3 – Bridge Deck Replacement with Cast-In-Place Concrete

This option would involve the complete removal of the bridge deck, elastomeric bridge deck joints, and 2-rail bridge rail with curbs and pedestrian fencing along the outside of the bridge. The bridge deck would be replaced with a new concrete deck, new single-slope concrete barrier, and new armorless bridge joints. The new bridge deck would be 9 ½" standard thickness as compared to the 11" existing thickness. The Level 1 Load Rating for the final condition was found to be acceptable. This option would provide a service life of 40 years to the bridge deck. The construction cost of this option is $ 1.354 million.

Option 4 – Bridge Deck Replacement with Pre-cast Concrete Deck Panels

This option will have the highest construction cost of all the options; however, traffic control costs may be lower due to the reduced construction time. Comparison of accelerated construction versus conventional construction is beyond the scope of work for this project at this time.

IN-DEPTH INSPECTION REPORT

D031085 P.I.N. 3501.60

B.I.N. 1050759

TEAM LEADER Andrew J. Fuller, P.E. 59848
NYSPE LICENSE #

ASSISTANT TEAM LEADER Jeffrey M. Reina, P.E.
ASSISTANT TEAM LEADER Logan Bessel
ASSISTANT TEAM LEADER Jerome Getter

FEATURE CARRIED I – 690
FEATURE CROSSED North Geddes Street

DATE FIELD WORK BEGAN January 13, 2014
DATE FIELD WORK COMPLETED January 13, 2014

TABLE OF CONTENTS

- TP 349 & 350
- IN-DEPTH CONDITION DOCUMENTATION
- IN-DEPTH PHOTO DOCUMENTATION
- ASBESTOS REPORT

TP 349 & TP 350

BRIDGE ELEMENT RATINGS

Inspection Date: 4/5/2012 RC: 33 BIN: 1050759

Bridge Ratings

Carried: 690I 690I33012015 Crossed: NO. GEDDES STREET CheckValue: 1,794,628,462

Inspection Agency: 10 - NYSDOT Type of Inspection: 1 - BIENNIAL
GTMS: 302 -- Steel - Stringer/Multi-Beam or Girder
POSTINGS: See Gen Rec Page 1 for Postings at time of inspection.
Further Investigation Needed: No
State Highway Number: 54-16 Milepoint: 7.74 AADT/Yr: 51467 / 2002
Orientation: 3 - East Political Unit: 2055 - City of SYRACUSE Year Built: 1968
Total Spans: 1 Ramp Bridge Attached To Span: NA BIN: NA
General Recommendation: 5 Computed Condition Rating: 4.891

Abutment Ratings:	**Beg Abut**	**End Abut**
Joint with Deck	5	3
Bearings, Bolts, Pads	6	6
Seats and Pedestals	5	5
Backwall	5	5
Stem (Breastwall)	5	5
Erosion or Scour	6	6
Footings	9	9
Piles	9	9
Recommendation	5	4

Wingwall Ratings:	**Beg Abut**	**End Abut**
Walls	5	5
Footings	9	9
Erosion or Scour	6	6
Piles	9	9

Channel Ratings:	**Channel**
Stream Alignment	8
Erosion and Scour	8
Waterway Opening	8
Bank Protection	8

Approach Ratings:	**Approaches**
Drainage	4
Embankment	6
Settlement	6
Erosion	6
Pavement	5
Guide Railing	4

Number of Flags Issued:

RED: 0 Yellow: 0 Safety: 1

Vulnerability Reviews Recommended: 1=Yes, 2=No, 3=NA, X=NotActive

Hydraulic: 3	Overload: X	Steel: 2
Collision: 2	Concrete: X	Seismic: X

Inspector's Signature: CheckValue: 1,794,628,462 Date: 4/5/2012

David Hann,PE () (Inspector ID:3000055)

Signed copy of this inspection report is available in the appropriate NYSDOT Regional Office

Reviewed By: Date: 6/5/2012

James R. Manning,PE () (QC ID:3000023)

Signed copy of this inspection report is available in the appropriate NYSDOT Regional Office

Inspection Date: 4/5/2012 RC: 33 BIN: 1050759

Span Ratings

Carried: 690I 690I33012015 Crossed: NO. GEDDES STREET CheckValue: 1,794,628,462

Deck Element Ratings:	**001**
Wearing Surface	4
Curbs	5
Sidewalks, Fascias	5
Railings, Parapets	4
Scuppers	8
Gratings	8
Median	5
Mono Deck Surface	5

Superstructure Ratings:	**001**
Structural Deck	3
Primary Members	6
Secondary Members	6
Paint	7
Joints	8
Recommendation	5

Pier Ratings:	**001**
Bearings, Bolts, Pads	8
Pedestals	8
Top of Cap or Beam	8
Stem Solid Pier	8
Cap Beam	8
Pier Columns	8
Footings	8
Erosion or Scour	8
Piles	8
Recommendation	8

Utility Ratings:	**001**
Lighting	5
Sign Structure	6
Utilities and Support	3

Field Notes:

Field Date	Arrival	Departure	Temp (C)	Temp (F)	Weather Conditions
4/4/2012	2:00:00 PM	5:00:00 PM		50	Overcast
4/5/2012	12:00:00 PM	3:00:00 PM		40	Overcast

IN-DEPTH CONDITION DOCUMENTATION

BIN 1050759

Visual Inspection

The bridge was built in 1968 with a major rehabilitation in 1984. During the 1984 rehabilitation miscellaneous concrete repairs were made to the abutments and piers under contract D500057. Superstructure repairs included painting structural steel, concrete bridge deck overlay, and deck joint replacement. Miscellaneous abutment and joint repairs were made along with new bearings in 2006 under contract D260442. The structural steel was painted in 2010 under contract D261472.

Cracks, spalls, and other field observations are shown on the plans. Below is a brief summary of conditions for each feature.

Superstructure

Deck – Bridge Deck Evaluation not required. The Bridge Deck rating from 2012 is less than 5

Steel – See Structural Steel Inspection Summary

Bearings – Bearing elements typically had minor isolated rust scale

Substructure

West Abutment – The concrete backwall, pedestals, stem, and wingwalls contained minor isolated areas of delaminated concrete and cracking. The backwall had areas of moisture stains and efflorescence, typically on the ends and under the center joint. Rust stains were present on the south end of the stem and on the northwest wingwall. Joint material was missing in the center construction joint.

East Abutment – The concrete pedestals, stem, and wingwalls contained only minor isolated areas of delaminated concrete and cracking. The backwall had a small area of spall behind pedestal G9. The backwall had areas of moisture stains and efflorescence, typically on the ends and under the center joint. Rust

stains were present on the southeast wingwall. Joint material was missing in the center construction joint.

STRUCTURAL STEEL INSPECTION SUMMARY

BIN 1050759

Special Emphasis Inspection Required

Non-Redundant/Fracture Critical Members – No

Pin and Hangers – No

Fatigue-Prone Welds – Yes

Non-Categorized Fatigue-Prone Details – No

Other (Specified in Text) – No

Special Emphasis Details

Cover plate welds: 100% Hands-on inspection performed – No cracks found.

Overall Steel Condition

The steel showed no sign of major deterioration. There were no isolated pockets of major section loss and no areas of concern were observed.

Paint

The paint appeared to be in good general condition with only minor isolated areas of rust. The steel was painted in 2010 under contract D261472.

Section Loss

Due to the age of the steel a blanket 5% section loss should be used in load rating.

FED ROAD REG. NO.	STATE	CONTRACT NO.	SHEET NO.	TOTAL SHEETS
1	N.Y.	D260442	31	40
P.I.N. 3804.98		B.I.N. 1050759		
I-690		ONONDAGA COUNTY		
REHABILITATION OF THREE BRIDGES				

DRAFTED BY J. PAPA ESTIMATED BY CHECKED BY SIGNED BY T. FOX

NOTES:

1. SOME REPAIR AREAS WERE ESTIMATED FROM VISUAL ASSESSMENT ONLY. THE CONTRACTOR SHALL SOUND THE CONCRETE TO DETERMINE THE REPAIR LIMITS. REPAIR LIMITS SHALL INCLUDE AN AREA A MINIMUM OF 150 mm BEYOND EACH SIDE OF THE UNSOUND CONCRETE. THESE LIMITS SHALL BE APPROVED BY THE E.I.C. ADDITIONAL CRACKS, NOT INCLUDED IN REPAIR AREAS FOR ITEM 582.05 - REMOVAL OF STRUCTURAL CONCRETE, REPLACEMENT WITH CLASS A CONCRETE, TO BE REPAIRED, SHALL BE APPROVED BY THE E.I.C.
2. THE CONTRACTOR SHALL SAW CUT TO A DEPTH OF 19 mm AT THE EDGE OF ALL REPAIR AREAS. DO NOT CUT ANY REINFORCEMENT BARS. PAYMENT FOR THIS WORK SHALL BE INCLUDED IN THE PRICE BID FOR THE APPROPRIATE CONCRETE REMOVAL ITEM.
3. THE PEDESTALS SHALL BE REMOVED ENTIRELY AND REPLACED TO THE PROPOSED ELEVATIONS. REFER TO DWG. PE-1 FOR EXISTING AND PROPOSED ELEVATIONS. THE CONTRACTOR SHALL ADJUST NEW ELEVATIONS BASED ON THE ACTUAL HEIGHT OF THE NEW BEARINGS PROVIDED.
4. EXISTING REBAR IN THE ABUTMENT, STEM WALLS, U-WALLS AND BACKWALLS THAT ARE ENCOUNTERED SHALL REMAIN IN PLACE. REBAR THAT HAS GREATER THAN 25% SECTION LOSS, IN THE OPINION OF THE E.I.C., SHALL BE REPLACED WITH THE SAME SIZE AND TYPE OF THE EXISTING REBAR ACCORDING TO THE DETAILS SHOWN ON DWG. PE-2. IF WELDED, WELDERS SHALL BE QUALIFIED IN ACCORDANCE WITH THE NEW YORK STATE STEEL CONSTRUCTION MANUAL. FOR WELDING DETAILS, REFER TO SECTION 7 OF THE NEW YORK STATE STEEL CONSTRUCTION MANUAL.
5. THE COST OF REPLACING EXISTING STEEL REINFORCING IN ABUTMENTS, U-WALLS AND BACKWALLS, INCLUDING SPLICING AND WELDING, SHALL BE PAID IN ACCORDANCE WITH ITEM 556.0201, UNCOATED BAR REINFORCEMENT FOR CONCRETE STRUCTURES
6. REFER TO DWG. BD-4 FOR REBAR SPLICING, SACRIFICAL ANODE & CHAMFER DETAILS.
7. THE CONTRACTOR SHALL APPLY A COATING-TYPE PROTECTIVE SEALER TO ALL SUBSTRUCTURE CONCRETE AFTER COMPLETION OF REPAIRS (PEDESTALS, BACKWALLS, STEMWALLS, ETC). PAYMENT TO BE MADE UNDER ITEM 559.1696 18 - PROTECTIVE COATING FOR STRUCTURAL CONCRETE. THE COATING SHALL BE APPLIED IN SUCH A MANNER AS TO OBTAIN A UNIFORM APPEARANCE OVER THE ENTIRE STRUCTURE ONCE THE COATING HAS CURED.
8. PEDESTAL REINFORCEMENT HOOPS ARE TO BE REPLACED USING ITEM 556.0202 - EPOXY COATED BAR REINFORCEMENT FOR CONCRETE STRUCTURES. ALL HOOPS ARE TO BE REPLACED; SAME SIZE AND SAME SPACING. THE MINIMUM COVER OVER REINFORCEMENT ON THE PEDESTALS SHALL BE 50 mm. THE COST OF ANY MODIFICATIONS TO THE EXISTING REINFORCEMENT IN THE PEDESTALS (SUCH AS BENDING OR CUTTING) SHALL BE INCLUDED IN THE PRICE BID FOR ITEM 580.01 - REMOVAL OF STRUCTURAL CONCRETE. REPLACEMENT OF REINFORCEMENT TO BE PAID FOR UNDER ITEM 556.0202 - EPOXY COATED BAR REINFORCEMENT FOR CONCRETE STRUCTURES. REFER TO DWG. BD-3 FOR PEDESTAL BAR REINFORCEMENT TABLE.
9. IT SHALL BE THE CONTRACTOR'S RESPONSIBILITY TO CONFIRM THE ACTUAL HEIGHT OF EACH EXISTING BEARING TO BE REPLACED PRIOR TO THE FABRICATION OF THE REPLACEMENT BEARINGS.

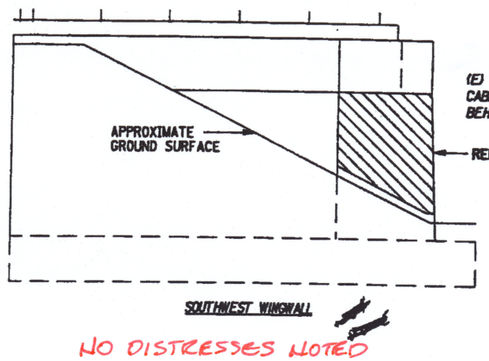

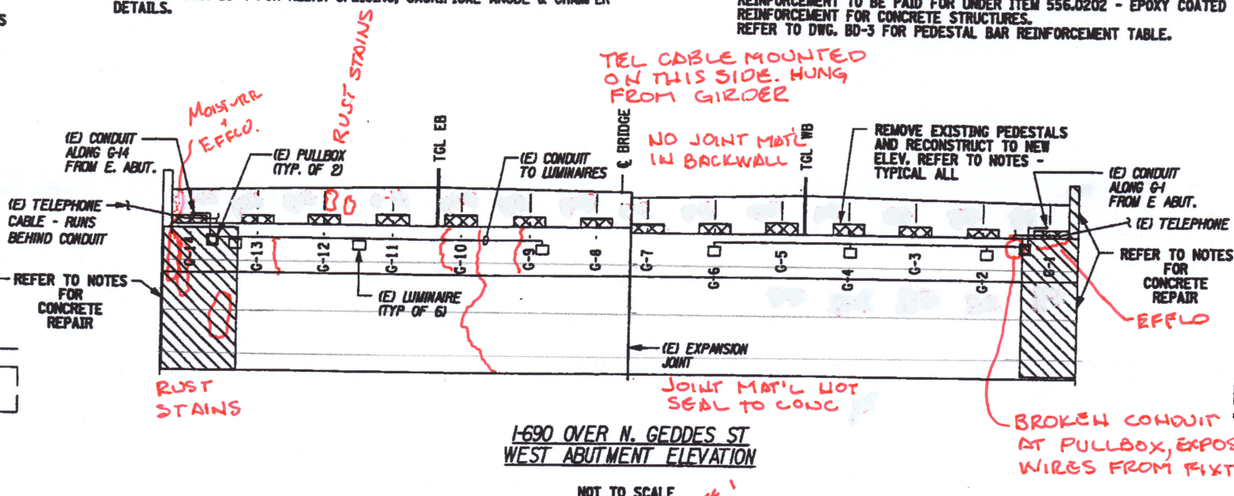

I-690 OVER N. GEDDES ST
WEST ABUTMENT ELEVATION

NOT TO SCALE

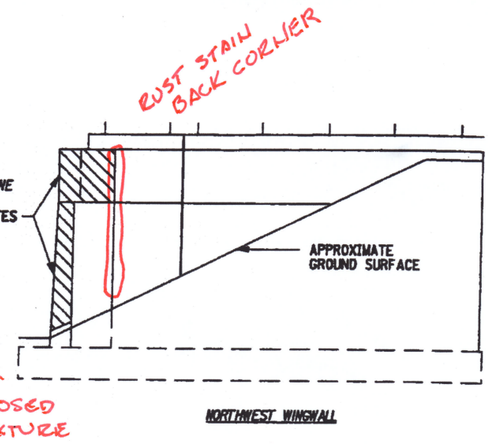

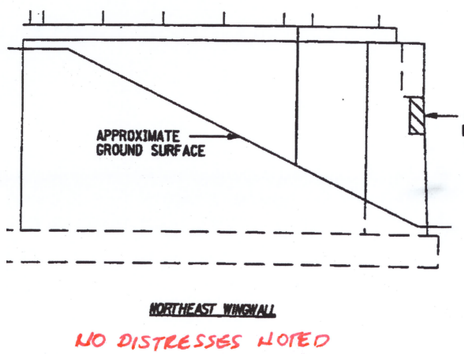

I-690 OVER N. GEDDES ST
EAST ABUTMENT ELEVATION

NOT TO SCALE

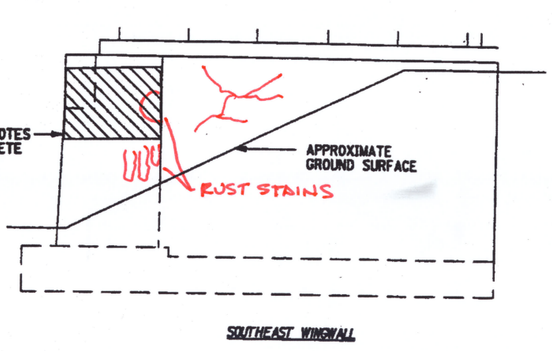

NOTE: 1) DECK JOINT BETWEEN SLAB IS WET. WEST BOUND SLAB APPROX 4" LOWER THAN EAST BOUND SLAB. FAIRLY UNIFORM ALONG THE LENGTH OF JOINT. SEVERAL AREA SHOW RUST STAINS WITH SOME MINOR EFFLO.

DECK ROTED 3, NO INSPECTION REQUIRED, FATIGUE DETAILS INSPECTED & ARE INTACT.

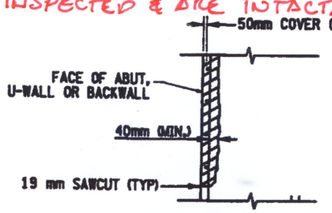

CONCRETE REPAIR DETAIL
NOT TO SCALE

LEGEND

- CORE LOCATION (C-X)
- PHOTO LOCATION (XX)
- DELAMINATION
- SPALLING 'D'
- CRACK
- MAP CRACKING
- MOISTURE
- HATCHED AREA TO BE REMOVED AND REPLACED WITH ITEM 582.05.
- CROSS HATCHED AREA TO BE REMOVED WITH ITEM 580.01, REMOVAL OF STRUCTURAL CONCRETE & REPLACED WITH ITEM 555.09, CONCRETE FOR STRUCTURES - CLASS HP

UTILITY QUALITY LEVEL D
ALL DIMENSIONS ARE IN m UNLESS OTHERWISE NOTED

AS BUILT REVISIONS

SIGNATURE DATE

I-690 ABUTMENT CONCRETE REPAIR

STATE OF NEW YORK
DEPARTMENT OF TRANSPORTATION
REGION 3

DOCUMENT NAME	DATE	DRAWING NO.
3804.98CR_AEL.DGN		

BIN 1050759
N. GEDDES ST
STRUCT STEEL FRAME

LEGEND

- CORE LOCATION
- PHOTO LOCATION
- DELAMINATION
- SPALLING
- CRACK
- MAP CRACKING
- MOISTURE

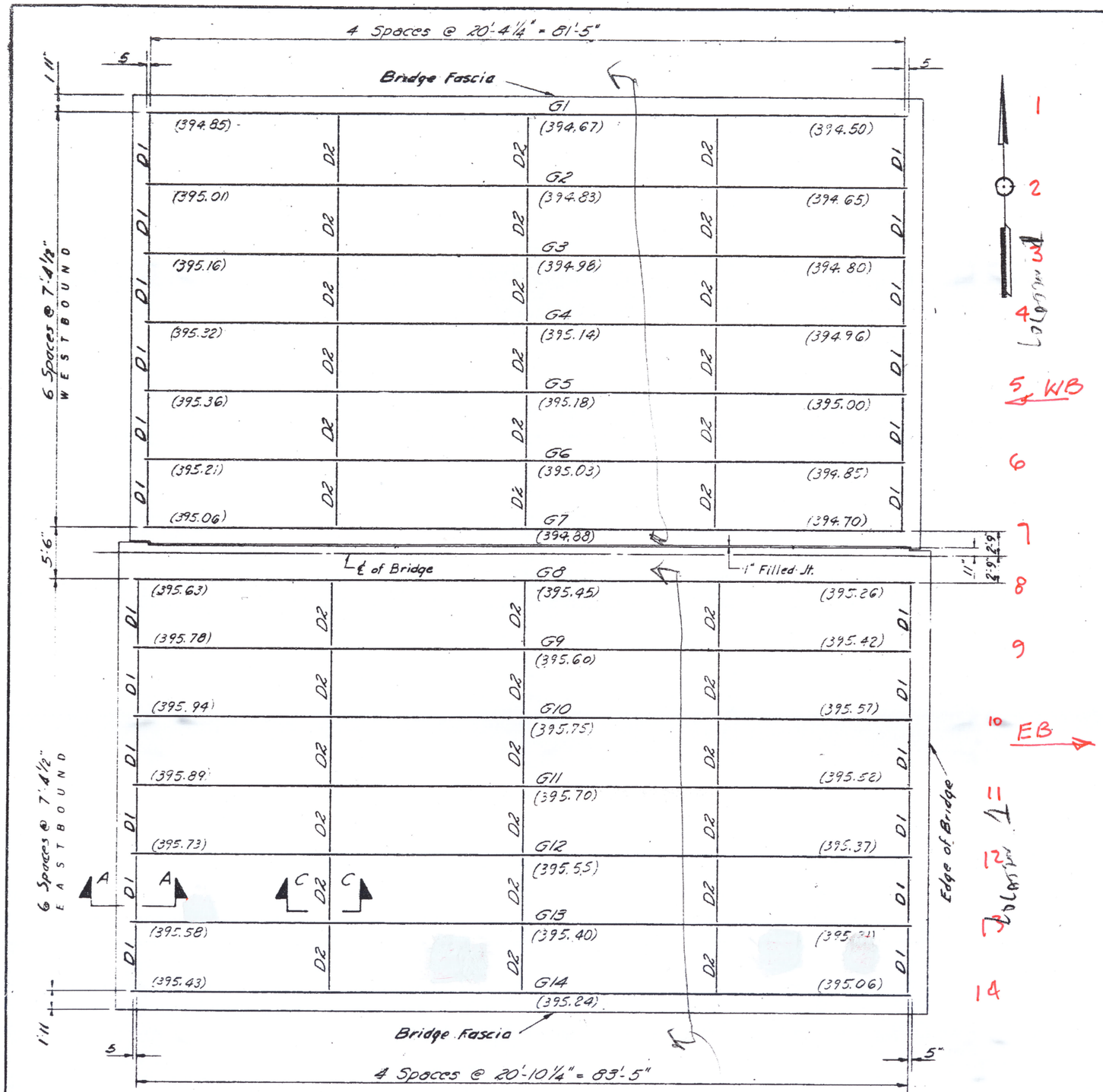

FRAMING PLAN

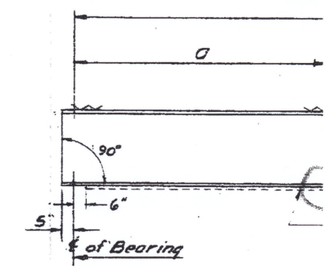

DECK RATED: 3
NO INSPECTION REQUIRED

	MARK	NO	SIZ
WB	G1	1	36WF
	G2,3,4,5,6	5	36WF
	G7	1	36WF2
EB	G8	1	36WF2
	G9,10,11,12,13	5	36WF1
	G14	1	36WF2

~~FATIG~~
FATIGUE WELDS INSPECTED - ALL INTACT

DIAPHRAGMS	
MARK	SIZE
D1	15[33.9
D2	18[42.7

IN-DEPTH PHOTO DOCUMENTATION

C&S Engineers, Inc.
499 Col. Eileen Collins Blvd.
Syracuse, New York 13212
Phone: (315) 455-2000
Fax: (315) 455-9667
www.cscos.com

I-690 over N Geddes St - BIN 1050759



DESCRIPTION: WEST ABUTMENT – STEM – BELOW PIER G1 - EFFLORESCENCE

PHOTO 1



DESCRIPTION: WEST ABUTMENT – BACKWALL – BETWEEN PEDESTALS G7 AND G8 – CONSTRUCTION JOINT

PHOTO 2

C&S Engineers, Inc.
499 Col. Eileen Collins Blvd.
Syracuse, New York 13212
Phone: (315) 455-2000
Fax: (315) 455-9667
www.cscos.com

I-690 over N Geddes St - BIN 1050759



DESCRIPTION: WEST ABUTMENT – BACKWALL – BEHIND PEDESTAL G12 – RUST STAINS

PHOTO 3



DESCRIPTION: WEST ABUTMENT – BACKWALL – BETWEEN GIRDER 14 AND CHEEKWALL – MOISTURE STAINS AND EFFLORESCENCE

PHOTO 4

C&S Engineers, Inc.
499 Col. Eileen Collins Blvd.
Syracuse, New York 13212
Phone: (315) 455-2000
Fax: (315) 455-9667
www.cscos.com

I-690 over N Geddes St - BIN 1050759



DESCRIPTION: WEST ABUTMENT – PEDESTAL G5 – TYPICAL CONCRETE

PHOTO 5



DESCRIPTION: WEST ABUTMENT – BEARING 7 - TYPICAL

PHOTO 6

C&S Engineers, Inc.
499 Col. Eileen Collins Blvd.
Syracuse, New York 13212
Phone: (315) 455-2000
Fax: (315) 455-9667
www.cscos.com

I-690 over N Geddes St - BIN 1050759



DESCRIPTION: UNDERDECK – SOUTH END FACING WEST – BETWEEN GIRDERS 12 AND 14 – SPALLING CONCRETE WITH EXPOSED REBAR

PHOTO 7



DESCRIPTION: UNDERDECK – SOUTHEAST END – BETWEEN GIRDER 13 AND 14 – SPALLING CONCRETE WITH EXPOSED REBAR

PHOTO 8

C&S Engineers, Inc.
499 Col. Eileen Collins Blvd.
Syracuse, New York 13212
Phone: (315) 455-2000
Fax: (315) 455-9667
www.cscos.com

I-690 over N Geddes St - BIN 1050759



DESCRIPTION: EAST ABUTMENT – BACKWALL – BETWEEN PEDESTAL G1 AND WINGWALL – MOISTURE STAINS AND EFFLORESCENCE

PHOTO 9



DESCRIPTION: EAST ABUTMENT – BACKWALL – BEHIND PEDESTAL G5 – MOISTURE STAINS

PHOTO 10

C&S Engineers, Inc.
499 Col. Eileen Collins Blvd.
Syracuse, New York 13212
Phone: (315) 455-2000
Fax: (315) 455-9667
www.cscos.com

I-690 over N Geddes St - BIN 1050759



DESCRIPTION: EAST ABUTMENT – BACKWALL – BEHIND PEDESTAL G7 – MOISTURE STAINS

PHOTO 11



DESCRIPTION: EAST ABUTMENT – JOINT – BETWEEN PEDESTALS G7 AND G8 – MOISTURE STAINS

PHOTO 12

C&S Engineers, Inc.
499 Col. Eileen Collins Blvd.
Syracuse, New York 13212
Phone: (315) 455-2000
Fax: (315) 455-9667
www.cscos.com

I-690 over N Geddes St - BIN 1050759



DESCRIPTION: EAST ABUTMENT – BACKWALL – BEHTWEEN PEDESTALS G9 AND G10 - CRACK

PHOTO 13



DESCRIPTION: EAST ABUTMENT – STEM – BELOW PEDESTALS G13 - CRACK

PHOTO 14

C&S Engineers, Inc.
499 Col. Eileen Collins Blvd.
Syracuse, New York 13212
Phone: (315) 455-2000
Fax: (315) 455-9667
www.cscos.com

I-690 over N Geddes St - BIN 1050759



DESCRIPTION: EAST ABUTMENT – BACKWALL – BETWEEN GIRDER 14 AND CHEEKWALL – MOISTURE STAINS

PHOTO 15



DESCRIPTION: EAST ABUTMENT – PEDESTAL G10 – TYPICAL CONCRETE

PHOTO 16

C&S Engineers, Inc.
499 Col. Eileen Collins Blvd.
Syracuse, New York 13212
Phone: (315) 455-2000
Fax: (315) 455-9667
www.cscos.com

I-690 over N Geddes St - BIN 1050759



DESCRIPTION: EAST ABUTMENT – BEARING 5 - TYPICAL

PHOTO 17



DESCRIPTION: UNDERDECK – FACING WEST – CENTER GIRDERS – GENERAL CONDITION

PHOTO 18

C&S Engineers, Inc.
499 Col. Eileen Collins Blvd.
Syracuse, New York 13212
Phone: (315) 455-2000
Fax: (315) 455-9667
www.cscos.com

I-690 over N Geddes St - BIN 1050759



DESCRIPTION: NORTHWEST WINGWALL – FACING SOUTHWEST

PHOTO 19



DESCRIPTION: SOUTHWEST WINGWALL – FACING NORTHWEST

PHOTO 20

C&S Engineers, Inc.
499 Col. Eileen Collins Blvd.
Syracuse, New York 13212
Phone: (315) 455-2000
Fax: (315) 455-9667
www.cscos.com

I-690 over N Geddes St - BIN 1050759



DESCRIPTION: WEST ABUTMENT – NORTH END – FACING WEST

PHOTO 21



DESCRIPTION: WEST ABUTMENT – SOUTH END – FACING WEST

PHOTO 22

C&S Engineers, Inc.
499 Col. Eileen Collins Blvd.
Syracuse, New York 13212
Phone: (315) 455-2000
Fax: (315) 455-9667
www.cscos.com

I-690 over N Geddes St - BIN 1050759



DESCRIPTION: EAST ABUTMENT – NORTH END – FACING EAST

PHOTO 23



DESCRIPTION: EAST ABUTMENT – SOUTH END – FACING EAST

PHOTO 24

C&S Engineers, Inc.
499 Col. Eileen Collins Blvd.
Syracuse, New York 13212
Phone: (315) 455-2000
Fax: (315) 455-9667
www.cscos.com

I-690 over N Geddes St - BIN 1050759



DESCRIPTION: NORTHEAST WINGWALL – FACING SOUTHEAST

PHOTO 25



DESCRIPTION: SOUTHEAST WINGWALL – FACING NORTHEAST

PHOTO 26

C&S Engineers, Inc.
499 Col. Eileen Collins Blvd.
Syracuse, New York 13212
Phone: (315) 455-2000
Fax: (315) 455-9667
www.cscos.com

I-690 over N Geddes St - BIN 1050759



DESCRIPTION: DECK – WESTBOUND – END APPROACH FACING WEST

PHOTO 27



DESCRIPTION: DECK – EASTBOUND – BEGIN APPROACH FACING WEST

PHOTO 28

C&S Engineers, Inc.
499 Col. Eileen Collins Blvd.
Syracuse, New York 13212
Phone: (315) 455-2000
Fax: (315) 455-9667
www.cscos.com

I-690 over N Geddes St - BIN 1050759



DESCRIPTION: ELEVATION – FACING SOUTH

PHOTO 29

DESCRIPTION:

PHOTO

N

PHOTO MAP

LEGEND

XX PHOTO LOCATION

XX HIDDEN PHOTO LOCATION

SOUTH BD N. GEDDES

NORTH BD N. GEDDES

I-690 WESTBOUND

I-690 WESTBOUND

I-690 EASTBOUND

I-690 EASTBOUND

PLAN

I-690 OVER N. GEDDES ST.

BIN 1050759
I-690 over
North Geddes ST

ASBESTOS DOCUMENTATION

ASBESTOS DOCUMENTATION FROM WATTS ARCHITECTURE & ENGINEERING, INC.

(WILL REPLACE BIN FOLDER ASBESTOS REPORT UPON COMPLETION)

ATHENICA
ENVIRONMENTAL SERVICES INC.
Tel (718) 784-7490
Fax (718) 784-4085

BULK (NOB) ASBESTOS ANALYSIS BY POLARIZED LIGHT MICROSCOPY AND TRANSMISSION ELECTRON MICROSCOPY

3

CLIENT: NYS DOT, Region 3
LABORATORY ID #: 04-04-143
DATES OF ANALYSIS: 04/29/04

PROJECT: Bin # 1050759
ANALYT. METHODOLOGIES: ELAP 198.1, ELAP 198.4
DATE OF REPORT: 04/30/04

LABORATORY RESULTS

CLIENT #	LAB. ID #	LOCATION	%ORG	%ASI	%AII	PLM RESULTS	TYPE OF ASBEST.	TEM RESULTS	TYPE OF ASBEST.	POSIT. / NEGAT.
01	04-04-143-01	Steel paint coat G1 @ begin abutment	26.38	11.38	62.25	**ND**	NA	**Trace**	Anthoph	**Negat.**
02	04-04-143-02	Steel paint coat G6 @ end abutment	33.53	16.67	49.81	**ND**	NA	**Trace**	Anthoph	**Negat.**
03	04-04-143-03	Steel paint coat G12 @ end abutment	43.53	7.93	48.54	**ND**	NA	**Trace**	Anthoph	**Negat.**

E. Sioukri

ANALYST
E. Sioukri

LABORATORY DIRECTOR
Spiro Dongaris

LABORATORY CERTIFICATION NUMBERS: NVLAP 101958, ELAP 10955

- Athenica Environmental Services Inc. (AES), is responsible only for information pertaining to samples taken by its employees.
- Samples will be stored for sixty (60) days. AES Inc., should be notified within this time frame for a true duplicate analysis.
- The report relates only to items tested. This report must not be used to claim product endorsement by NVLAP or any other agency of the U.S. Government. Test reports may not be reproduced except in full and with prior approval of AES Inc.
- The liability of Athenica Environmental Services Inc. with respect to the services charged, shall in no event exceed the amount of the invoice.

CLIENT: NYS DOT / REG. 3 | SITE: BIN # 1050759

PROJECT NO. (ATHENICA FILE#): C003314 | DATE: 4/21/~~2003~~ 2004

METHOD OF SHIPMENT: U.S. MAIL | INSPECTOR: WA Kick

...ES INC.
... AVENUE
...Y, NY 11104
...784-7490
...) 784-4085

NUMBER OF SAMPLES: 3 | TYPE OF ANALYSIS REQUESTED: ☐ PLM ☒ NOB-PLM ☒ NOB-TEM ☐ OTHERS

TURNAROUND TIME: ☐ 6 HRS ☐ 12 HRS ☐ 24 HRS ☒ OTHER HRS

COMMENTS: ATT: CHRISTOPHER ANDERSON
333 E. WASHINGTON ST. SYRACUSE, N.Y. 13202

HOM. AREA	SAMLPLE #	SAMPLE DESCRIPTION	SAMPLE LOCATION	FIELD COMMENTS	LABORATORY RESULTS		
					PLM	PLM-NOB	TEM-NOB
1050759	01	STEEL PAINT COAT	6, @ Beg. Abut.				
	02	"	6₆ " END "				
↓	03	"	6₁₂ " " "				

TRANSMITTAL OF RESULTS :
☒ STANDARD
☐ TELEPHONE RESULTS TO
☐ FAX RESULTS TO

TELEPHONE # : (315) 428-4628
FAX # :

BATCH # : 03-04/13

CHAIN OF CUSTODY RECORD

RELINQUISHED BY :	WA Kick	DATE :	4/22/~~2003~~ 2004	TIME :	11AM
RECEIVED BY :	[illegible]	DATE :	4/26/2004	TIME :	
ANALYST :		DATE :	4/29/2003	TIME :	

LABORATORY ACCREDITATION :
NVLAP# 101958 ELAP# 10955

NEW YORK STATE
DEPARTMENT OF TRANSPORTATION
D031085 P.I.N 3501.60

LEVEL 1 LOAD RATING
B.I.N. 1050759
I-690 EB & WB OVER
NORTH GEDDES STREET

LOAD RATING SUMMARY TABLE (LOAD FACTOR)					
CONTROLLING MEMBER	CONTROLLING PARAMETER	LIVE LOAD	LIVE LOAD TYPE	INVENTORY RATING	OPERATING RATING
(G8) EB FASCIA GIRDER	DESIGN FLEXURE	HS20-44	Axle Load	HS 35.8 (64.5 TONS)	HS 59.8 (107.7 TONS)
(G8) EB FASCIA GIRDER	DESIGN FLEXURE	ALTERNATE MILITARY LOADING	Axle Load	2.297 (55.1 TONS)	3.837 (92.0 TONS)

DOES NOT INCLUDE FUTURE WEARING COURSE

ANALYSIS METHOD:LOAD FACTOR

RECOMMENDED POSTING AS-IS CONDITION: _____ Tons __X__ None

CALCULATED BY:

STATE OF NEW YORK JEFFREY M. REINA LICENSED PROFESSIONAL ENGINEER No. 081990

DATE: 3-13-2014

QUALITY ASSURANCE BY:

STATE OF NEW YORK CHARLES F. STANTON IV LICENSED PROFESSIONAL ENGINEER 077396

DATE: 3-13-2014

C&S COMPANIES

499 Col. Eileen Collins Blvd.
Syracuse, NY 13212
phone 315-455-2000
fax 315-455-9667
www.cscos.com

ENGINEERS
DESIGN BUILD
TECHNICAL RESOURCES
OPERATIONS

C&S Engineers, Inc.
Syracuse Hancock International Airport
Syracuse, NY 13212
phone 315-455-2000
fax 315-455-9667
www.cscos.com

TECHNICAL MEMORANDUM

TO: **FILE (190.514.001)**

FROM: **JESSICA S. BAUER, P.E**
NYSPE 084915

DATE: **FEBRUARY 10, 2014**

C&S PROJECT NO.: 190.514.001

RE: **SEISMIC ASSESSMENT SUMMARY**
NEW YORK STATE DEPARTMENT OF TRANSPORTATION
D031085; PIN 3501.60; I-81

BIN: **1050759 Seismic Assessment**

This memorandum summarizes the seismic assessment conducted for BIN 1050759 as part of the Interstate 81 Project in Syracuse, NY. The purpose of the assessment is to determine if seismic retrofits are warranted at the superstructure to substructure connection, and if further seismic evaluation of the structure is required. This memorandum will give the assessment results, retrofits required and recommendations for further seismic evaluation of the structure.

ASSESSMENT PROCEDURE

The seismic assessment was performed in accordance with the FHWA Seismic Retrofitting Manual for Highway Structures: Part 1 - Bridges, January 2006. As per the referenced manual, seismic assessment was performed for both lower level and upper level earthquake ground motion. The lower level earthquake ground motion has a reasonable likelihood of occurrence within the life of the bridge (50% probability of exceedance within a 75 year bridge life). The upper level earthquake ground motion has a finite likelihood of occurrence within the life of the bridge (7% probability of exceedance within a 75 year bridge life).

Values for the spectral acceleration for the Syracuse area used in the assessment are as follows:

- Lower Level Earthquake Ground Motion for a Short Period (0.2 seconds): $S_S = 0.0251$
- Lower Level Earthquake Ground Motion for a Long Period (1.0 seconds): $S_1 = 0.0076$
- Upper Level Earthquake Ground Motion for a Short Period (0.2 seconds): $S_S = 0.139$
- Upper Level Earthquake Ground Motion for a Long Period (1.0 seconds): $S_1 = 0.047$

These values are considered constant and are the same for all seismic assessments of bridges in the Syracuse area.

The Site Class is based on the soil conditions at the bridge location. It was determined that this parameter has little effect on the results of the seismic assessment because the spectral

You created this PDF from an application that is not licensed to print to novaPDF printer (http://www.novapdf.com)

acceleration values for the Syracuse area are small. Based on this, a site class of D was used for all seismic assessments of bridges in the Syracuse area.

Bridge parameters used in the seismic assessment were retrieved from the record drawings and WinBolts data.

The seismic assessment takes into account the anticipated service life, importance, and the seismic exposure of the bridge to determine a seismic retrofit category (SRC). The SRC is then used to determine seismic evaluation methods and retrofit measures. There are four SRCs, A through D. Seismic retrofit category A is the lowest category; bridges in this category do not require retrofits or further seismic evaluation. Seismic retrofit category D is the highest category; bridges in this category requiring the most rigorous seismic evaluations and retrofits.

ASSESSMENT RESULTS

The SRC for the bridge is "**C**" for lower level earthquake ground motion and "**B**" for upper level earthquake ground motion.

RETROFITS REQUIRED

Bearing replacements and seat width improvements are not required at the abutments. Additional retrofits may be required if further seismic evaluation is needed.

RECOMMENDATIONS FOR FURTHER SEISMIC EVALUATION

For the lower level earthquake ground motion, it is recommended that capacity/demand ratios for bridge components are calculated as per Section 5.4 of the referenced manual. For the upper level earthquake ground motion, it is recommended that the capacities of the bearings are checked as per Section 5.2 of the referenced manual.

Retrofit cost estimates will be provided after any further required seismic evaluations are completed.

You created this PDF from an application that is not licensed to print to novaPDF printer (http://www.novapdf.com)

ENGINEERS
DESIGN BUILD
TECHNICAL RESOURCES
OPERATIONS

C&S Companies

C&S Engineers, Inc.
Syracuse Hancock International Airport
Syracuse, NY 13212
phone 315-455-2000
fax 315-455-9667
www.cscos.com

TECHNICAL MEMORANDUM

TO: **FILE (190.514.001)**

FROM: **PAUL BYRNE, P.E.**
NYSPE 055928

DATE: **JUNE 4, 2014**

C&S PROJECT NO.: 190.514.001

RE: **NEW YORK STATE DEPARTMENT OF TRANSPORTATION**
D031085; PIN 3501.60; I-81 Opportunities, BIN 1050759 Fatigue Evaluation

---

This memorandum documents a fatigue evaluation conducted for the existing Interstate 81 Viaduct Project. Existing structures with AASHTO Category D, E, and E' fatigue-prone details require 100% hands-on inspection unless proven to be exempt. The purpose of the evaluation is to assess the remaining life of fatigue-prone components.

EVALUATION PROCEDURES

The fatigue evaluation was performed in accordance with the AASHTO Guide Specification for Fatigue Evaluations of Existing Steel Bridges, 1990. Fatigue-prone welds identified in the biennial inspection reports were located on record drawings and confirmed visually in the field. Additional information concerning fatigue-prone welds located in BIN folders was also obtained and reviewed prior to inspection.

EVALUATION RESULTS

The results of the fatigue evaluation of the existing bridge are shown below. The remaining safe fatigue life of the Interior Girder fatigue components have been **exhausted**.

Fatigue Detail Location	Remaining Safe Fatigue Life (Years)	Remaining Mean Fatigue Life (Years)
Span 1, Exterior Girders G1 & G7, End of Bottom Flange Cover Plate	Infinite	Infinite
Span 1, Interior Girders G2 to G6, End of Bottom Flange Cover Plate	-22.65	55.55
Span 1, Exterior Girder G8, End of Bottom Flange Cover Plate	Infinite	Infinite
Span 1, Interior Girders G9 to G13, End of Bottom Flange Cover Plate	-22.24	57.57
Span 1, Exterior Girder G14, End of Bottom Flange Cover Plate	Infinite	Infinite

IN-DEPTH INSPECTION REPORT

D031085 P.I.N. 3501.60

B.I.N. 1050779

TEAM LEADER Andrew J. Fuller, P.E. 59848
NYSPE LICENSE #

ASSISTANT TEAM LEADER Jeffrey M. Reina, P.E.
ASSISTANT TEAM LEADER Logan Bessel
ASSISTANT TEAM LEADER Jerome Getter

FEATURE CARRIED I - 690
FEATURE CROSSED Leavenworth Avenue

DATE FIELD WORK BEGAN January 14, 2014
DATE FIELD WORK COMPLETED January 15, 2014

TABLE OF CONTENTS

- TP 349 & 350
- IN-DEPTH CONDITION DOCUMENTATION
- IN-DEPTH PHOTO DOCUMENTATION
- ASBESTOS REPORT

TP 349 & TP 350

BRIDGE ELEMENT RATINGS

Inspection Date: 3/21/2012 RC: 33 BIN: 1050779

Bridge Ratings

Carried: 690I 690I33012018 Crossed: LEAVNWORTH AVENUE CheckValue: 1,778,716,346

Inspection Agency: 10 - NYSDOT Type of Inspection: 1 - BIENNIAL
GTMS: 302 -- Steel - Stringer/Multi-Beam or Girder
POSTINGS: See Gen Rec Page 1 for Postings at time of inspection.
Further Investigation Needed: No
State Highway Number: 66-5 Milepoint: 8.38 AADT/Yr: 64204 / 2002
Orientation: 3 - East Political Unit: 2055 - City of SYRACUSE Year Built: 1968
Total Spans: 1 Ramp Bridge Attached To Span: NA BIN: NA
General Recommendation: 5 Computed Condition Rating: 4.922

Abutment Ratings:	**Beg Abut**	**End Abut**
Joint with Deck	5	5
Bearings, Bolts, Pads	4	4
Seats and Pedestals	5	5
Backwall	4	5
Stem (Breastwall)	5	4
Erosion or Scour	6	6
Footings	9	9
Piles	9	9
Recommendation	5	5

Wingwall Ratings:	**Beg Abut**	**End Abut**
Walls	5	5
Footings	9	9
Erosion or Scour	6	6
Piles	9	9

Channel Ratings:	**Channel**
Stream Alignment	8
Erosion and Scour	8
Waterway Opening	8
Bank Protection	8

Approach Ratings:	**Approaches**
Drainage	5
Embankment	6
Settlement	6
Erosion	5
Pavement	5
Guide Railing	3

Number of Flags Issued:

RED: 0 Yellow: 0 Safety: 1

Vulnerability Reviews Recommended: 1=Yes, 2=No, 3=NA, X=NotActive

Hydraulic: 3	Overload: X	Steel: 2
Collision: 2	Concrete: X	Seismic: X

Inspector's Signature: CheckValue: 1,778,716,346 Date: 3/21/2012

David Hann,PE () (Inspector ID:3000055)

Signed copy of this inspection report is available in the appropriate NYSDOT Regional Office

Reviewed By: Date: 5/7/2012

James R. Manning,PE () (QC ID:3000023)

Signed copy of this inspection report is available in the appropriate NYSDOT Regional Office

Inspection Date: 3/21/2012 RC: 33 BIN: 1050779

Span Ratings

Carried: 690I 690I33012018 Crossed: LEAVNWORTH AVENUE CheckValue: 1,778,716,346

Deck Element Ratings:	**001**
Wearing Surface	5
Curbs	4
Sidewalks, Fascias	5
Railings, Parapets	4
Scuppers	8
Gratings	8
Median	6
Mono Deck Surface	5

Superstructure Ratings:	**001**
Structural Deck	5
Primary Members	6
Secondary Members	6
Paint	5
Joints	8
Recommendation	6

Pier Ratings:	**001**
Bearings, Bolts, Pads	8
Pedestals	8
Top of Cap or Beam	8
Stem Solid Pier	8
Cap Beam	8
Pier Columns	8
Footings	8
Erosion or Scour	8
Piles	8
Recommendation	8

Utility Ratings:	**001**
Lighting	4
Sign Structure	6
Utilities and Support	8

Field Notes:

Field Date	Arrival	Departure	Temp (C)	Temp (F)	Weather Conditions
3/21/2012	12:30:00 PM	5:00:00 PM		75	Sunny

IN-DEPTH CONDITION DOCUMENTATION

IN DEPTH INSPECTION REPORT

BIN 1050779

Visual Inspection

The bridge was built in 1968 with a major rehabilitation in 1984. During the 1984 rehabilitation, miscellaneous concrete repairs were made to the abutments and piers under contract D500057. Superstructure repairs included painting structural steel, concrete bridge deck overlay, and deck joint replacement.

Cracks, spalls, and other field observations are shown on the plans. Below is a brief summary of conditions for each feature.

Superstructure

Deck – See Bridge Deck Evaluation Report

Steel – See Structural Steel Inspection Summary

Bearings – Bearing elements typically have rust, with numerous bearings having pack rust.

Substructure

West Abutment – The concrete pedestals and wingwalls contained minor isolated areas of delaminated concrete and cracking. The backwall had sections of spalled concrete between pedestal 1 and the northwest cheekwall and between pedestals 8 and 9. Efflorescence was noted between pedestals 9 and 10 and a rust stain was above pedestal 11. The stem contained delaminated and cracked concrete below pedestals 1, 7, and 8, with a section of spall below pedestal 7.

West Abutment – The concrete backwall, pedestals, and wingwalls contained minor areas of delaminated concrete and cracking. Efflorescence was on the backwall between pedestals 1 and 2 and between pedestals 8 and 9. The stem contained spalled concrete below pedestal 1 and delaminated concrete below pedestals 1, 9, and from 12 to 16.

STRUCTURAL STEEL INSPECTION SUMMARY

BIN 1050779

Special Emphasis Inspection Required

Non-Redundant/Fracture Critical Members – No

Pin and Hangers – No

Fatigue-Prone Welds – Yes

Non-Categorized Fatigue-Prone Details – No

Other (Specified in Text) – No

Special Emphasis Details

Cover plate welds: 100% Hands-on inspection performed – No cracks found.

Overall Steel Condition

The steel showed no sign of major deterioration.

Paint

The bridge paint is flaking off on the flanges and some web areas. Some locations have received “touchup” painting.

Section Loss

The section for girder 16 was measured in 2 locations. The specified web thickness from record plans was 0.625”. At the east corner of the girder, the web was measured at 0.548”, giving a section loss of 12%. At 10’ from the east corner, the web was measured at 0.596”, giving a section loss of 5%.

Due to the age of the steel a blanket 5% section loss should be used in load rating.

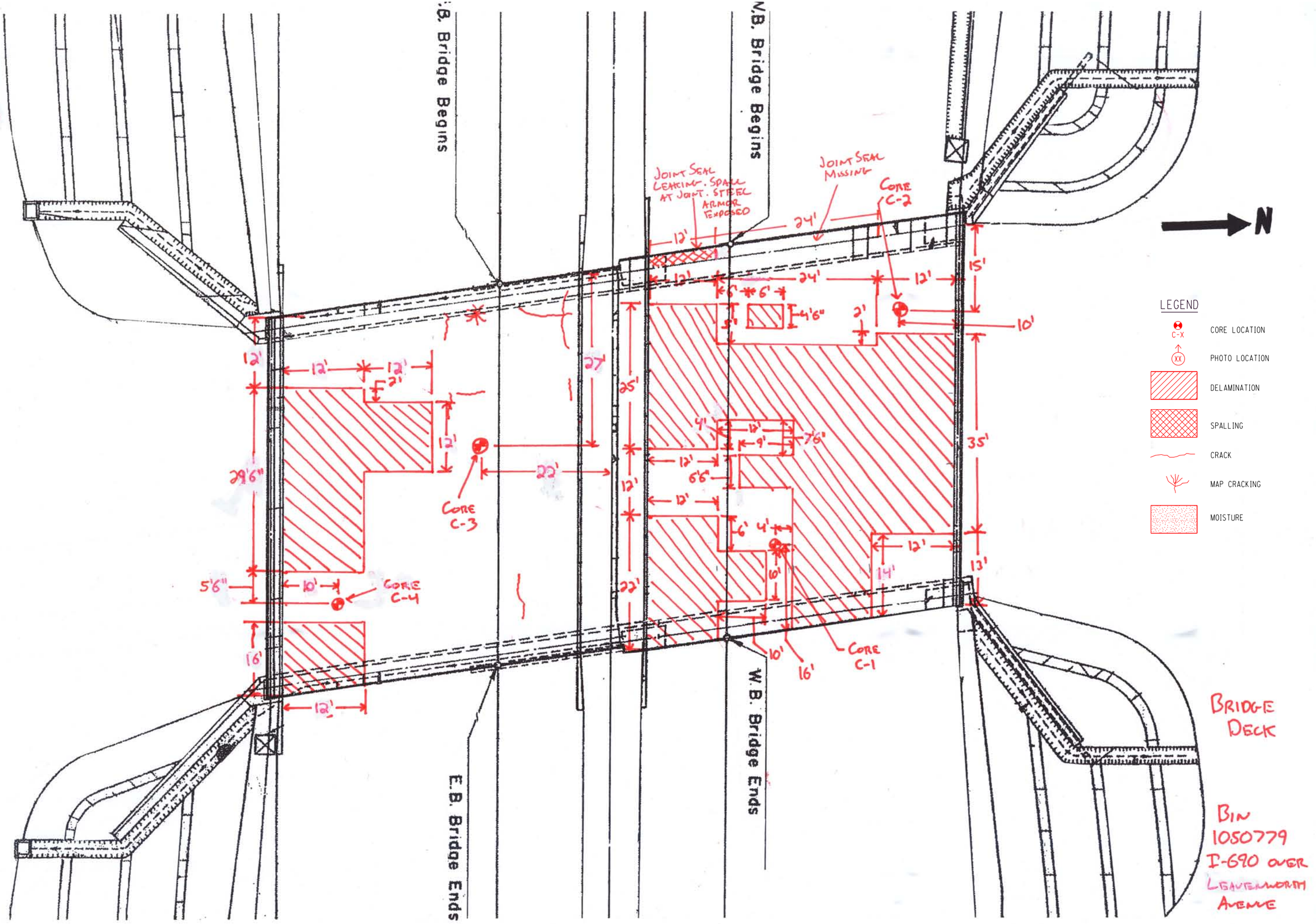
E.B. Bridge Begins
W.B. Bridge Begins
JOINT SEAL LEACHING. SPALL AT JOINT. STEEL ARMOR EXPOSED
JOINT SEAL MISSING
CORE C-2
N
LEGEND
CORE LOCATION
C-X
PHOTO LOCATION
XX
DELAMINATION
SPALLING
CRACK
MAP CRACKING
MOISTURE
CORE C-3
CORE C-4
CORE C-1
E.B. Bridge Ends
W.B. Bridge Ends
BRIDGE DECK
BIN 1050779
I-690 OVER LEAVENWORTH AVENUE

PLAN

Scale: 3/16" = 1'-0"

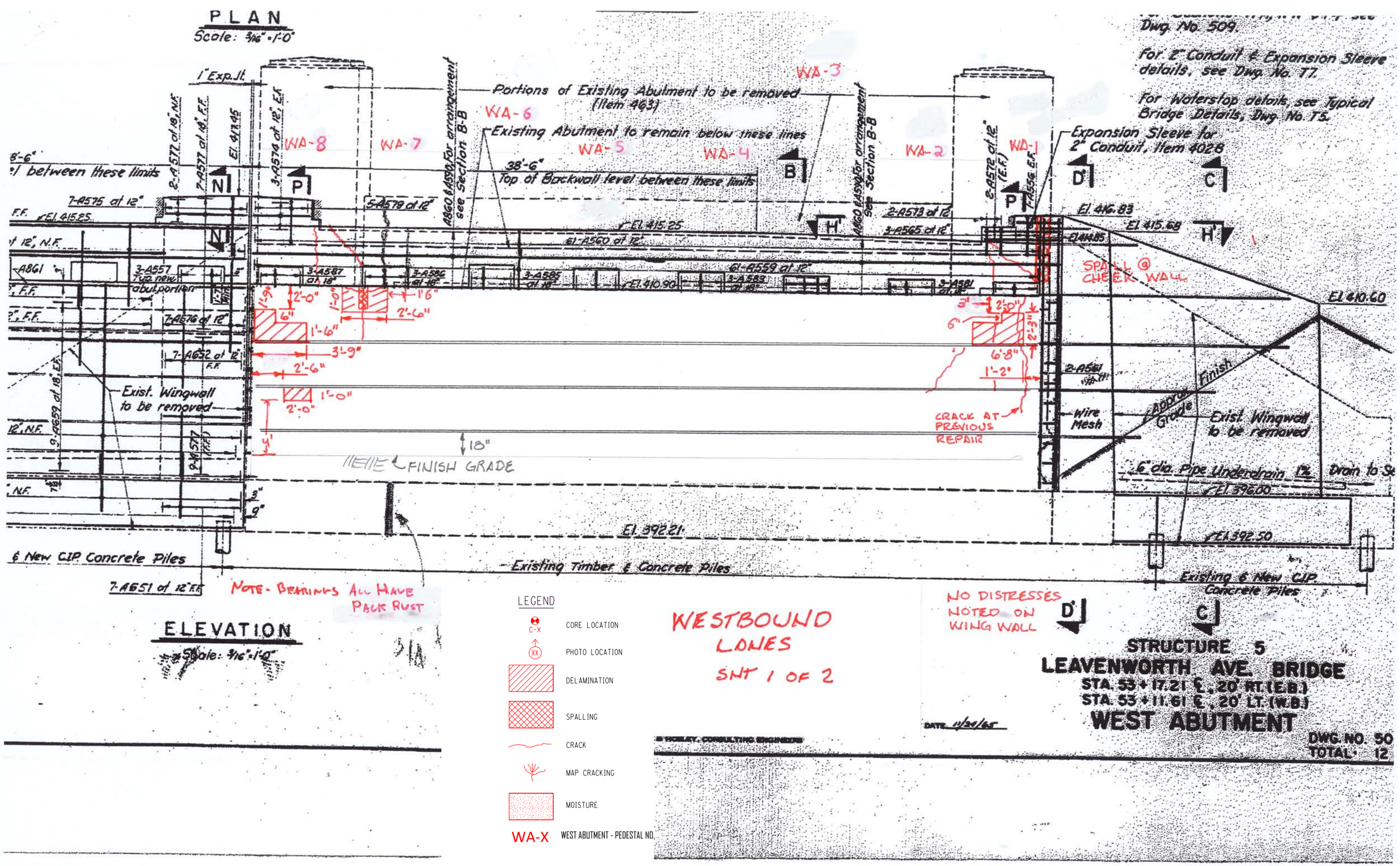

Dwg. No. 509.

For 2" Conduit & Expansion Sleeve details, see Dwg. No. 77.

For Waterstop details, see Typical Bridge Details, Dwg. No. 75.

ELEVATION

Scale: 3/16" = 1'-0"

LEGEND

- CORE LOCATION (C-X)
- PHOTO LOCATION (XX)
- DELAMINATION
- SPALLING
- CRACK
- MAP CRACKING
- MOISTURE
- WA-X WEST ABUTMENT - PEDESTAL NO.

WESTBOUND LANES

SHT 1 OF 2

NO DISTRESSES NOTED ON WING WALL

DATE 11/21/85

STRUCTURE 5

LEAVENWORTH AVE. BRIDGE

STA. 53+17.21 ℄, 20' RT. (E.B.)

STA. 53+11.61 ℄, 20' LT. (W.B.)

WEST ABUTMENT

DWG. NO. 50

TOTAL 12

PLAN

Scale: 3/16" = 1'-0"

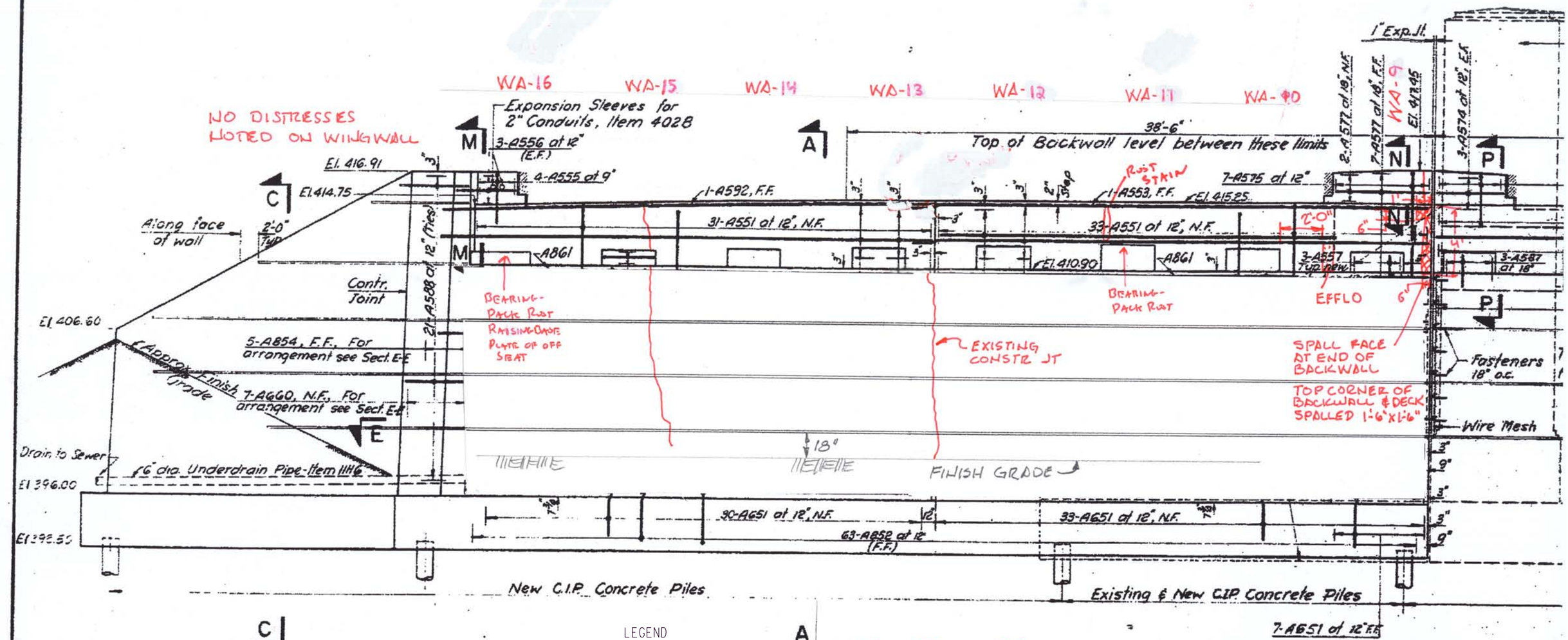

LEGEND

- C-X — CORE LOCATION
- XX — PHOTO LOCATION
- DELAMINATION
- SPALLING
- CRACK
- MAP CRACKING
- MOISTURE
- WA-X — WEST ABUTMENT - PEDESTAL NO.

DESIGNED BY: T. Rees
DRAWN BY: J. Kulpa
CHECKED BY: K. Fletcher

EASTBOUND LANES

SHT 2 OF 2

STRUCTURE 5
LEAVENWORTH AVE. BRIDGE
STA. 53+17.21 ℄, 20' RT. (E.B.)
STA. 53+11.61 ℄, 20' LT. (W.B.)
WEST ABUTMENT

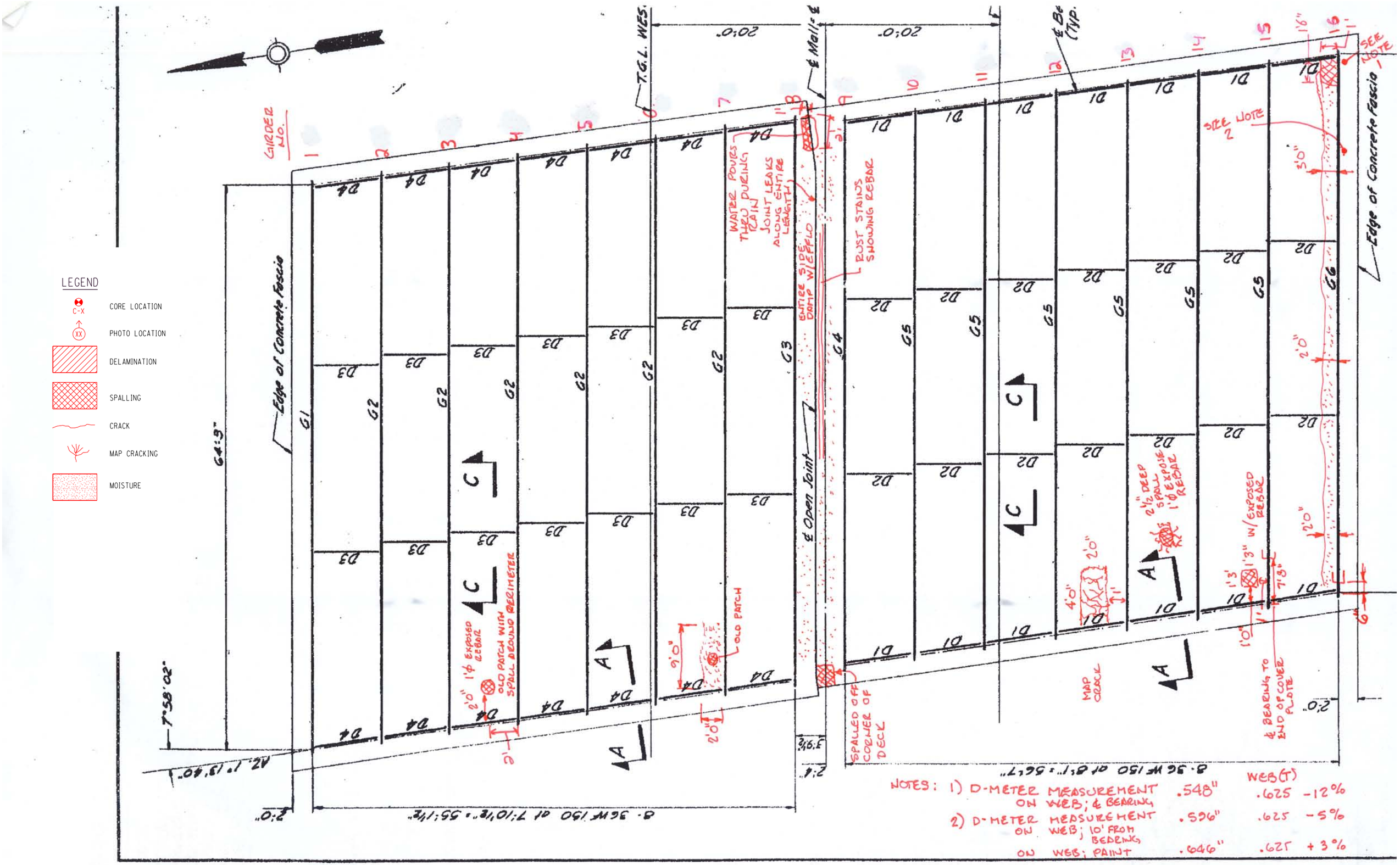
LEGEND
CORE LOCATION
PHOTO LOCATION
DELAMINATION
SPALLING
CRACK
MAP CRACKING
MOISTURE
GIRDER NO.
Edge of Concrete Fascia
T.G.L. WEST
℄ Mall = ℄
℄ Be (Typ.)
WATER POURS THRU DURING RAIN
JOINT LEAKS ALONG ENTIRE LENGTH
ENTIRE SIDE DAMP W/EFFLO
RUST STAINS SHOWING REBAR
SEE NOTE 1
SEE NOTE 2
℄ Open Joint
OLD PATCH WITH SPALL AROUND PERIMETER
1'φ EXPOSED REBAR
OLD PATCH
SPALLED OFF CORNER OF DECK
MAP CRACK
2½" DEEP SPALL 1'φ EXPOSE REBAR
1'3" W/EXPOSED REBAR
℄ BEARING TO END OF COVER PLATE
8-36 WF 150 at 7'10½" = 55'1½"
8-36 WF 150 at 8'1" = 56'7"
64'3"
7°58'02"
NOTES: 1) D-METER MEASUREMENT ON WEB; ℄ BEARING .548" WEB(T) .625 -12%
2) D-METER MEASUREMENT ON WEB; 10' FROM BEARING .596" .625 -5%
ON WEB; PAINT .646" .625 +3%

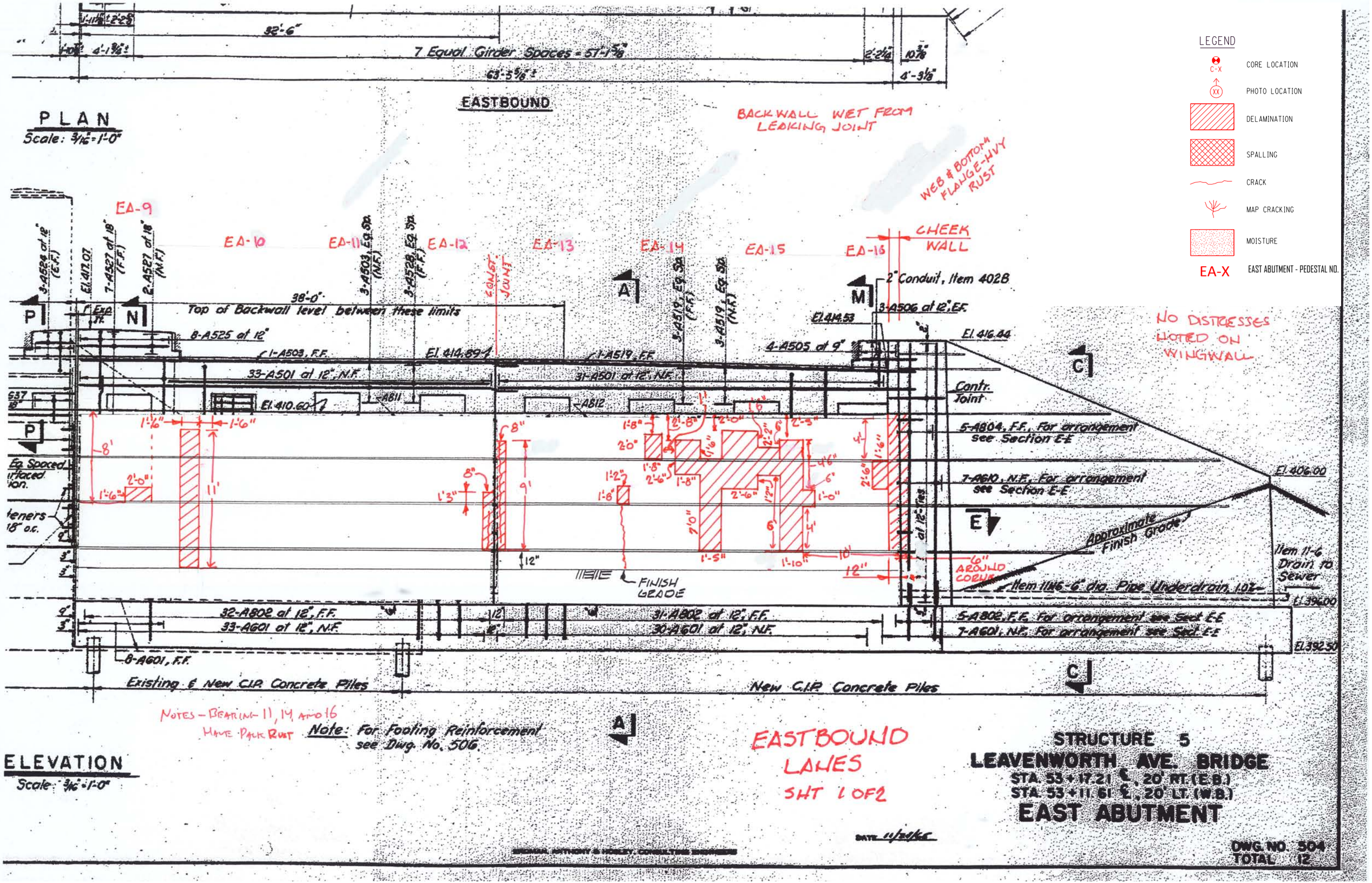

PLAN
Scale: 3/16" = 1'-0"
EASTBOUND
7 Equal Girder Spaces = 57'-1 5/8"
32'-6"
63'-5 5/8" ±
BACKWALL WET FROM LEAKING JOINT
WEB & BOTTOM FLANGE-HVY RUST
LEGEND
CORE LOCATION
PHOTO LOCATION
DELAMINATION
SPALLING
CRACK
MAP CRACKING
MOISTURE
EA-X EAST ABUTMENT - PEDESTAL NO.
EA-9
EA-10
EA-11
EA-12
EA-13
EA-14
EA-15
EA-16
CHEEK WALL
CONST. JOINT
38'-0"
Top of Backwall level between these limits
8-A525 at 12"
1-A503, F.F.
El. 414.89
1-A519, F.F.
33-A501 at 12", N.F.
31-A501 at 12", N.F.
El. 410.60
A811
A812
2" Conduit, Item 402B
3-A506 at 12", E.F.
El. 414.53
El. 416.44
4-A505 at 9"
NO DISTRESSES NOTED ON WINGWALL
Contr. Joint
5-A804, F.F., For arrangement see Section E-E
7-A610, N.F., For arrangement see Section E-E
El. 406.00
Approximate Finish Grade
Item 11-6 Drain to Sewer
Item 11N6-6" dia. Pipe Underdrain, 1.0%
El. 396.00
El. 392.50
6" AROUND CORNER
FINISH GRADE
32-A802 at 12", F.F.
33-A601 at 12", N.F.
31-A802 at 12", F.F.
30-A601 at 12", N.F.
5-A802, F.F., For arrangement see Sect. E-E
7-A601, N.F., For arrangement see Sect. E-E
8-A601, F.F.
Existing & New C.I.P. Concrete Piles
New C.I.P. Concrete Piles
ELEVATION
Scale: 3/16" = 1'-0"
NOTES - BEARING 11, 14, AND 16 HAVE PACK RUST
Note: For Footing Reinforcement see Dwg. No. 506.
EASTBOUND LANES
SHT 1 OF 2
STRUCTURE 5
LEAVENWORTH AVE. BRIDGE
STA. 53+17.21 ℄, 20' RT. (E.B.)
STA. 53+11.61 ℄, 20' LT. (W.B.)
EAST ABUTMENT
DATE 11/24/65
DWG. NO. 504
TOTAL 12

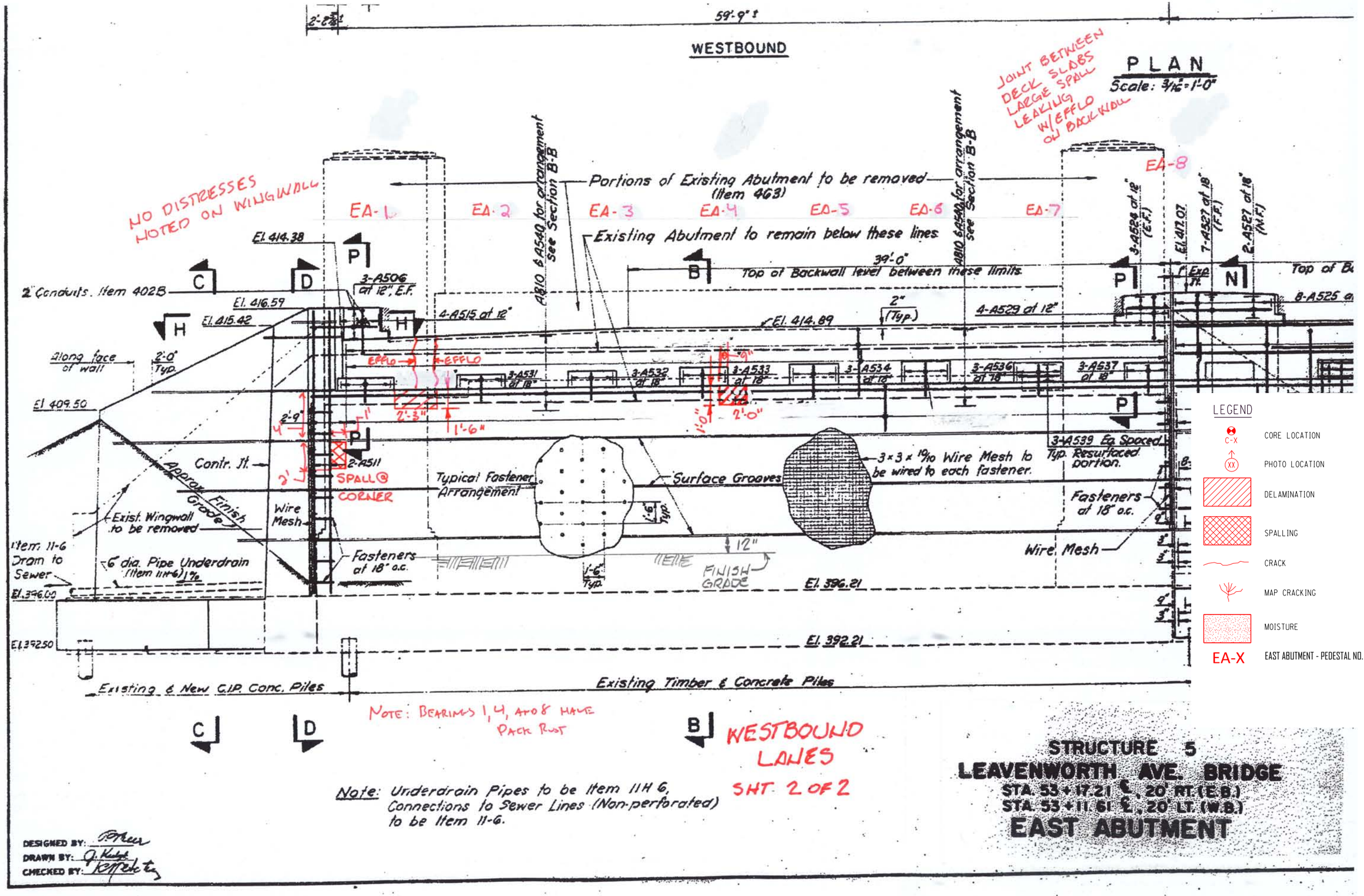

Note: Underdrain Pipes to be Item 11H 6, Connections to Sewer Lines (Non-perforated) to be Item 11-6.

STRUCTURE 5
LEAVENWORTH AVE. BRIDGE
STA. 53 + 17.21 ℄, 20' RT. (E.B.)
STA. 53 + 11.61 ℄, 20' LT. (W.B.)
EAST ABUTMENT

DESIGNED BY: [signature]
DRAWN BY: [signature]
CHECKED BY: [signature]

IN-DEPTH PHOTO DOCUMENTATION

C&S Engineers, Inc.
499 Col. Eileen Collins Blvd.
Syracuse, New York 13212
Phone: (315) 455-2000
Fax: (315) 455-9667
www.cscos.com

I-690 over Leavenworth Ave - BIN 1050779



DESCRIPTION: WEST ABUTMENT – BACKWALL – BETWEEN NORTH CHEEKWALL AND GIRDER 1 – SPALLING CONCRETE

PHOTO 1



DESCRIPTION: WEST ABUTMENT – BACKWALL – BEHIND PEDESTAL 1 – CRACKS AND RUST STAINS

PHOTO 2

ID Numbers in Photo's are for field use only.

C&S Engineers, Inc.
499 Col. Eileen Collins Blvd.
Syracuse, New York 13212
Phone: (315) 455-2000
Fax: (315) 455-9667
www.cscos.com

I-690 over Leavenworth Ave - BIN 1050779



DESCRIPTION: WEST ABUTMENT – STEM – BELOW PEDESTAL 1 – DELAMINATED CONCRETE

PHOTO 3



DESCRIPTION: WEST ABUTMENT – BEARING 1 – PACK RUST (TYPICAL)

PHOTO 4

ID Numbers in Photo's are for field use only.

C&S Engineers, Inc.
499 Col. Eileen Collins Blvd.
Syracuse, New York 13212
Phone: (315) 455-2000
Fax: (315) 455-9667
www.cscos.com

I-690 over Leavenworth Ave - BIN 1050779



DESCRIPTION: WEST ABUTMENT – BACKWALL – BETWEEN PEDESTALS 7 AND 8 – CRACKS AND MOISTURE STAINS

PHOTO 5



DESCRIPTION: WEST ABUTMENT – STEM – BELOW PEDESTAL 7 – DELAMINATED AND SPALLING CONCRETE

PHOTO 6

ID Numbers in Photo's are for field use only.

C&S Engineers, Inc.
499 Col. Eileen Collins Blvd.
Syracuse, New York 13212
Phone: (315) 455-2000
Fax: (315) 455-9667
www.cscos.com

I-690 over Leavenworth Ave - BIN 1050779



DESCRIPTION: WEST ABUTMENT – STEM – BELOW PEDESTAL 8 – DELAMINATED CONCRETE

PHOTO 7



DESCRIPTION: WEST ABUTMENT – BACKWALL – SOUTH OF PEDESTAL 8 – MOISTURE STAIN

PHOTO 8

ID Numbers in Photo's are for field use only.

C&S Engineers, Inc.
499 Col. Eileen Collins Blvd.
Syracuse, New York 13212
Phone: (315) 455-2000
Fax: (315) 455-9667
www.cscos.com

I-690 over Leavenworth Ave - BIN 1050779



DESCRIPTION: WEST ABUTMENT – BACKWALL – NORTH OF PEDESTAL 9 – SPALLING CONCRETE

PHOTO 9



DESCRIPTION: WEST ABUTMENT – BACKWALL – BETWEEN PEDESTALS 9 AND 10 - EFFLORESCENCE

PHOTO 10

ID Numbers in Photo's are for field use only.

C&S Engineers, Inc.
499 Col. Eileen Collins Blvd.
Syracuse, New York 13212
Phone: (315) 455-2000
Fax: (315) 455-9667
www.cscos.com

I-690 over Leavenworth Ave - BIN 1050779



DESCRIPTION: WEST ABUTMENT – PEDESTAL 12 – TYPICAL CONCRETE

PHOTO 11



DESCRIPTION: WEST ABUTMENT – BACKWALL – ABOVE PEDESTAL 11 – RUST STAIN

PHOTO 12

ID Numbers in Photo's are for field use only.

C&S Engineers, Inc.
499 Col. Eileen Collins Blvd.
Syracuse, New York 13212
Phone: (315) 455-2000
Fax: (315) 455-9667
www.cscos.com

I-690 over Leavenworth Ave - BIN 1050779



DESCRIPTION: WEST ABUTMENT – BACKWALL – BEHIND PEDESTAL 15 - CRACK

PHOTO 13



DESCRIPTION: WEST ABUTMENT – PEDESTAL 16 – PACK RUST – RAISING BASE OFF OF SEAT

PHOTO 14

ID Numbers in Photo's are for field use only.

C&S Engineers, Inc.
499 Col. Eileen Collins Blvd.
Syracuse, New York 13212
Phone: (315) 455-2000
Fax: (315) 455-9667
www.cscos.com

I-690 over Leavenworth Ave - BIN 1050779



DESCRIPTION: UNDERDECK – BAY 3 – WEST END – OLD PATCH WITH SPALL

PHOTO 15



DESCRIPTION: UNDERDECK – BAY 12 – WEST END – OLD PATCH WITH SPALL

PHOTO 16

ID Numbers in Photo's are for field use only.

C&S Engineers, Inc.
499 Col. Eileen Collins Blvd.
Syracuse, New York 13212
Phone: (315) 455-2000
Fax: (315) 455-9667
www.cscos.com

I-690 over Leavenworth Ave - BIN 1050779



DESCRIPTION: UNDERDECK – BETWEEN SOUTH CHEEKWALL AND GIRDER 16 – SPALLING CONCRETE, MOISTURE

PHOTO 17



DESCRIPTION: EAST ABUTMENT – BACKWALL AND UNDERDECK BETWEEN SOUTH CHEEKWALL AND GIRDER 16 – MOISTURE STAINS

PHOTO 18

ID Numbers in Photo's are for field use only.

C&S Engineers, Inc.
499 Col. Eileen Collins Blvd.
Syracuse, New York 13212
Phone: (315) 455-2000
Fax: (315) 455-9667
www.cscos.com

I-690 over Leavenworth Ave - BIN 1050779



DESCRIPTION: UNDERDECK – BETWEEN GIRDER 15 AND 16 – SOUTH EAST END FACING WEST – MOISTURE STAINS

PHOTO 19



DESCRIPTION: UNDERDECK – BETWEEN GIRDER 8 AND 9 – JOINT – SPALLING AND MOISTURE STAINS

PHOTO 20

ID Numbers in Photo's are for field use only.

C&S Engineers, Inc.
499 Col. Eileen Collins Blvd.
Syracuse, New York 13212
Phone: (315) 455-2000
Fax: (315) 455-9667
www.cscos.com

I-690 over Leavenworth Ave - BIN 1050779



DESCRIPTION: UNDERDECK – CENTER JOINT – FACING EAST – MOISTURE STAINS

PHOTO 21



DESCRIPTION: UNDERDECK – BETWEEN NORTH CHEEKWALL AND GIRDER 1 – MOISTURE STAINS AND EFFLORESCENCE

PHOTO 22

ID Numbers in Photo's are for field use only.

C&S Engineers, Inc.
499 Col. Eileen Collins Blvd.
Syracuse, New York 13212
Phone: (315) 455-2000
Fax: (315) 455-9667
www.cscos.com

I-690 over Leavenworth Ave - BIN 1050779



DESCRIPTION: EAST ABUTMENT – STEM – BELOW PEDESTAL 1 – SPALLED CONCRETE

PHOTO 23



DESCRIPTION: EAST ABUTMENT – BACKWALL – BETWEEN PEDESTALS 1 AND 2 – RUST STAINS AND EFFLORESCENCE

PHOTO 24

ID Numbers in Photo's are for field use only.

C&S Engineers, Inc.
499 Col. Eileen Collins Blvd.
Syracuse, New York 13212
Phone: (315) 455-2000
Fax: (315) 455-9667
www.cscos.com

I-690 over Leavenworth Ave - BIN 1050779



DESCRIPTION: EAST ABUTMENT – BEARING 2 – PACK RUST (TYPICAL)

PHOTO 25



DESCRIPTION: EAST ABUTMENT – STEM – BELOW PEDESTAL 4 – DELAMINATED CONCRETE

PHOTO 26

ID Numbers in Photo's are for field use only.

C&S Engineers, Inc.
499 Col. Eileen Collins Blvd.
Syracuse, New York 13212
Phone: (315) 455-2000
Fax: (315) 455-9667
www.cscos.com

I-690 over Leavenworth Ave - BIN 1050779



DESCRIPTION: EAST ABUTMENT – PEDESTAL 6 – TYPICAL CONCRETE

PHOTO 27



DESCRIPTION: EAST ABUTMENT – STEM – BELOW PEDESTALS 9 AND 10 – DELAMINATED CONCRETE

PHOTO 28

ID Numbers in Photo's are for field use only.

C&S Engineers, Inc.
499 Col. Eileen Collins Blvd.
Syracuse, New York 13212
Phone: (315) 455-2000
Fax: (315) 455-9667
www.cscos.com

I-690 over Leavenworth Ave - BIN 1050779



DESCRIPTION: EAST ABUTMENT – STEM – BETWEEN PEDESTALS 12 AND 13 ALONG JOINT – DELAMINATED AND CRACKED CONCRETE

PHOTO 29

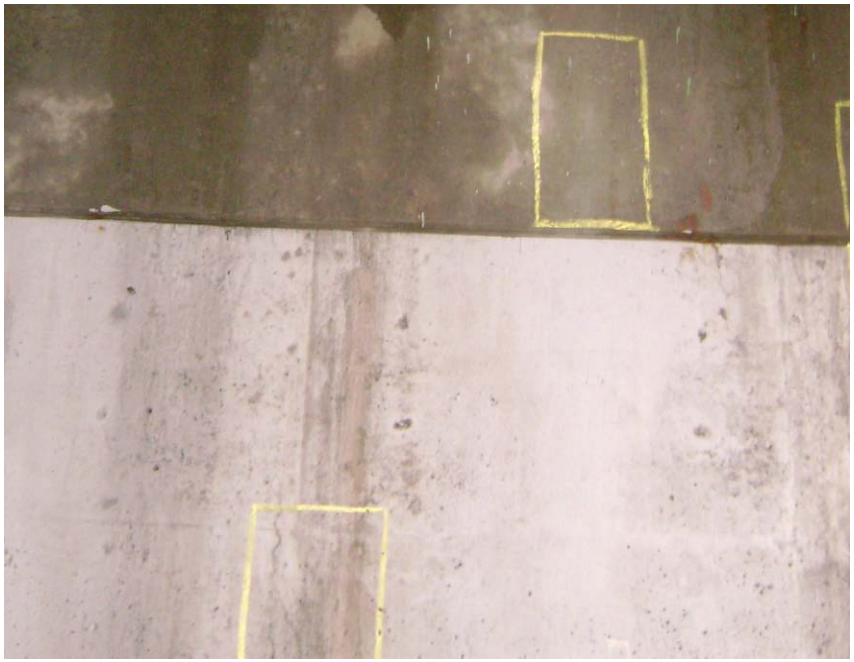

DESCRIPTION: EAST ABUTMENT – STEM – BELOW PEDESTAL 14 – DELAMINATED CONCRETE

PHOTO 30

C&S Engineers, Inc.
499 Col. Eileen Collins Blvd.
Syracuse, New York 13212
Phone: (315) 455-2000
Fax: (315) 455-9667
www.cscos.com

I-690 over Leavenworth Ave - BIN 1050779



DESCRIPTION: EAST ABUTMENT – STEM – BELOW PEDESTALS 14 TO 16 – DELAMINATED CONCRETE

PHOTO 31



DESCRIPTION: EAST ABUTMENT – STEM – BETWEEN PEDESTALS 16 AND SOUTHEAST WINGWALL – DELAMINATED CONCRETE

PHOTO 32

C&S Engineers, Inc.
499 Col. Eileen Collins Blvd.
Syracuse, New York 13212
Phone: (315) 455-2000
Fax: (315) 455-9667
www.cscos.com

I-690 over Leavenworth Ave - BIN 1050779



DESCRIPTION: NORTHWEST WINGWALL – FACING SOUTHWEST

PHOTO 33



DESCRIPTION: WEST ABUTMENT – FACING SOUTHWEST

PHOTO 34

ID Numbers in Photo's are for field use only.

C&S Engineers, Inc.
499 Col. Eileen Collins Blvd.
Syracuse, New York 13212
Phone: (315) 455-2000
Fax: (315) 455-9667
www.cscos.com

I-690 over Leavenworth Ave - BIN 1050779



DESCRIPTION: SOUTHWEST WINGWALL – FACING WEST

PHOTO 35



DESCRIPTION: SOUTHEAST WINGWALL – FACING NORTHEAST

PHOTO 36

ID Numbers in Photo's are for field use only.

C&S Engineers, Inc.
499 Col. Eileen Collins Blvd.
Syracuse, New York 13212
Phone: (315) 455-2000
Fax: (315) 455-9667
www.cscos.com

I-690 over Leavenworth Ave - BIN 1050779



DESCRIPTION: EAST ABUTMENT – FACING SOUTHEAST

PHOTO 37



DESCRIPTION: NORTHEAST WINGWALL – FACING SOUTHEAST

PHOTO 38

ID Numbers in Photo's are for field use only.

C&S Engineers, Inc.
499 Col. Eileen Collins Blvd.
Syracuse, New York 13212
Phone: (315) 455-2000
Fax: (315) 455-9667
www.cscos.com

I-690 over Leavenworth Ave - BIN 1050779



DESCRIPTION: BRIDGE DECK – EASTBOUND SPAN – FACING EAST

PHOTO 39



DESCRIPTION: BRIDGE DECK – WESTBOUND SPAN – FACING EAST

PHOTO 40

ID Numbers in Photo's are for field use only.

C&S Engineers, Inc.
499 Col. Eileen Collins Blvd.
Syracuse, New York 13212
Phone: (315) 455-2000
Fax: (315) 455-9667
www.cscos.com

I-690 over Leavenworth Ave - BIN 1050779



DESCRIPTION: UNDERDECK – FACING SOUTH

PHOTO 41



DESCRIPTION: ELEVATION – FACING SOUTH

PHOTO 42

ID Numbers in Photo's are for field use only.

E.B. Bridge Begins

W.B. Bridge Begins

WEST ABUTMENT

EAST ABUTMENT

E.B. Bridge Ends

W.B. Bridge Ends

N

PHOTO LOC MAP

LEGEND

XX PHOTO LOCATION

XX HIDDEN PHOTO LOCATION

BIN 1050779
I-690 OVER LEAVENWORTH AVENUE

ASBESTOS DOCUMENTATION

ASBESTOS DOCUMENTATION FROM WATTS ARCHITECTURE & ENGINEERING, INC.

(WILL REPLACE BIN FOLDER ASBESTOS REPORT UPON COMPLETION)

ATHENICA
ENVIRONMENTAL SERVICES INC.
Tel (718) 784-7490
Fax (718) 784-4085

3

BULK (NOB) ASBESTOS ANALYSIS BY POLARIZED LIGHT MICROSCOPY AND TRANSMISSION ELECTRON MICROSCOPY

CLIENT: NYS DOT, Region 3
LABORATORY ID #: 04-05-231
DATES OF ANALYSIS: 06/02/04

PROJECT: Bin # 1050779
ANALYT. METHODOLOGIES: ELAP 198.1, ELAP 198.4
DATE OF REPORT: 06/02/04

LABORATORY RESULTS

CLIENT #	LAB. ID #	LOCATION	%ORG	%ASI	%AII	PLM RESULTS	TYPE OF ASBEST.	TEM RESULTS	TYPE OF ASBEST.	POSIT. / NEGAT.
01	04-05-231-01	Steel paint/coating, G6 @ begin Abutment	37.07	6.99	55.93	**ND**	NA	**ND**	NA	**Negat.**
02	04-05-231-02	Steel paint/coating, G8 @ begin Abutment	33.76	8.63	57.61	**ND**	NA	**ND**	NA	**Negat.**
03	04-05-231-03	Steel paint/coating, G12 @ end Abutment	34.37	11.97	53.66	**ND**	NA	**ND**	NA	**Negat.**

ANALYST
E. Dimitrakas

LABORATORY DIRECTOR
Spiro Dongaris

LABORATORY CERTIFICATION NUMBERS: NVLAP 101958, ELAP 10955

- Athenica Environmental Services Inc. (AES), is responsible only for information pertaining to samples taken by its employees.
- Samples will be stored for sixty (60) days. AES Inc., should be notified within this time frame for a true duplicate analysis.
- The report relates only to items tested. This report must not be used to claim product endorsement by NVLAP or any other agency of the U.S. Government. Test reports may not be reproduced except in full and with prior approval of AES Inc.
- The liability of Athenica Environmental Services Inc. with respect to the services charged, shall in no event exceed the amount of the invoice.

ATHENICA
ENVIRONMENTAL SERVICES INC.
45-09 GREENPOINT AVENUE
LONG ISLAND CITY, NY 11104
Tel. (718) 784-7490
Fax. (718) 784-4085

CLIENT: NYS DOT / REG. 3
SITE: BIN # 1050779
PROJECT NO. (ATHENICA FILE#): C003314
DATE: 5/12/~~2003~~ 2004
METHOD OF SHIPMENT: U.S. MAIL
INSPECTOR: W. A. KICK

NUMBER OF SAMPLES: 3

TYPE OF ANALYSIS REQUESTED: ☐ PLM ☒ NOB-PLM ☒ NOB-TEM ☐ OTHERS

TURNAROUND TIME: ☐ 6 HRS ☐ 12 HRS ☐ 24 HRS ☒ OTHER HRS

COMMENTS: ATT: CHRISTOPHER ANDERSON
333 E. WASHINGTON ST. SYRACUSE, N.Y. 13202

HOM. AREA	SAMLPLE #	SAMPLE DESCRIPTION	SAMPLE LOCATION	FIELD COMMENTS	LABORATORY RESULTS		
					PLM	PLM-NOB	TEM-NOB
050779	01	STEEL PAINT COAT	66 @ Beg Abut				
↓	02	"	68 @ Beg "				
↓	03	"	612 @ End Abut				

TRANSMITTAL OF RESULTS:
[X] STANDARD
[ ] TELEPHONE RESULTS TO
[ ] FAX RESULTS TO

TELEPHONE #: (315) 428-4628
FAX #:

BATCH #: 04-05-231

CHAIN OF CUSTODY RECORD

RELINQUISHED BY:	W. A Kick	DATE:	1 / 1 ~~2003~~ 2004	TIME:	10 AM
RECEIVED BY:	MYNA120	DATE:	5 / 12 / 2004	TIME:	
ANALYST:	E. DIMITRIADIS	DATE:	6 / 2 / 2004	TIME:	

LABORATORY ACCREDITATION:
NYLAP# 101958 ELAP# 10955

NEW YORK STATE
DEPARTMENT OF TRANSPORTATION
D031085 P.I.N 3501.60

LEVEL 1 LOAD RATING
B.I.N. 1050779
I-690 EB & WB over Leavenworth Avenue

LOAD RATING SUMMARY TABLE (LOAD FACTOR)					
CONTROLLING MEMBER	**CONTROLLING PARAMETER**	**LIVE LOAD**	**LIVE LOAD TYPE**	**INVENTORY RATING**	**OPERATING RATING**
WB (G2) INTERIOR GIRDER	SERVICE	HS20-44	Axle Load	HS 34.5 (62.2 TONS)	HS 57.7 (103.9 TONS)
WB (G2) INTERIOR GIRDER	SERVICE	ALTERNATE MILITARY LOADING	Axle Load	2.096 (50.3 TONS)	3.501 (84.0 TONS)

DOES NOT INCLUDE FUTURE WEARING COURSE

ANALYSIS METHOD:LOAD FACTOR

RECOMMENDED POSTING AS-IS CONDITION: _____ Tons __X__ None

CALCULATED BY:



DATE: 3-27-2014

QUALITY ASSURANCE BY:



DATE: 3-27-2014

C&S COMPANIES

499 Col. Eileen Collins Blvd.
Syracuse, NY 13212
phone 315-455-2000
fax 315-455-9667
www.cscos.com

ENGINEERS
DESIGN BUILD
TECHNICAL RESOURCES
OPERATIONS

C&S Companies

C&S Engineers, Inc.
Syracuse Hancock International Airport
Syracuse, NY 13212
phone 315-455-2000
fax 315-455-9667
www.cscos.com

TECHNICAL MEMORANDUM

TO: FILE (190.514.001)

FROM: JESSICA S. BAUER, P.E.
NYSPE 084915

DATE: FEBRUARY 5, 2014

C&S PROJECT NO.: 190.514.001

RE: SEISMIC ASSESSMENT SUMMARY
NEW YORK STATE DEPARTMENT OF TRANSPORTATION
D031085; PIN 3501.60; I-81

BIN: 1050779 Seismic Assessment

This memorandum summarizes the seismic assessment conducted for BIN 1050779 as part of the Interstate 81 Project in Syracuse, NY. The purpose of the assessment is to determine if seismic retrofits are warranted at the superstructure to substructure connection, and if further seismic evaluation of the structure is required. This memorandum will give the assessment results, retrofits required and recommendations for further seismic evaluation of the structure.

ASSESSMENT PROCEDURE

The seismic assessment was performed in accordance with the FHWA Seismic Retrofitting Manual for Highway Structures: Part 1 - Bridges, January 2006. As per the referenced manual, seismic assessment was performed for both lower level and upper level earthquake ground motion. The lower level earthquake ground motion has a reasonable likelihood of occurrence within the life of the bridge (50% probability of exceedance within a 75 year bridge life). The upper level earthquake ground motion has a finite likelihood of occurrence within the life of the bridge (7% probability of exceedance within a 75 year bridge life).

Values for the spectral acceleration for the Syracuse area used in the assessment are as follows:

- Lower Level Earthquake Ground Motion for a Short Period (0.2 seconds): $S_S = 0.0251$
- Lower Level Earthquake Ground Motion for a Long Period (1.0 seconds): $S_1 = 0.0076$
- Upper Level Earthquake Ground Motion for a Short Period (0.2 seconds): $S_S = 0.139$
- Upper Level Earthquake Ground Motion for a Long Period (1.0 seconds): $S_1 = 0.047$

These values are considered constant and are the same for all seismic assessments of bridges in the Syracuse area.

The Site Class is based on the soil conditions at the bridge location. It was determined that this parameter has little effect on the results of the seismic assessment because the spectral

You created this PDF from an application that is not licensed to print to novaPDF printer (http://www.novapdf.com)

acceleration values for the Syracuse area are small. Based on this, a site class of D was used for all seismic assessments of bridges in the Syracuse area.

Bridge parameters used in the seismic assessment were retrieved from the record drawings and WinBolts data.

The seismic assessment takes into account the anticipated service life, importance, and the seismic exposure of the bridge to determine a seismic retrofit category (SRC). The SRC is then used to determine seismic evaluation methods and retrofit measures. There are four SRCs, A through D. Seismic retrofit category A is the lowest category; bridges in this category do not require retrofits or further seismic evaluation. Seismic retrofit category D is the highest category; bridges in this category requiring the most rigorous seismic evaluations and retrofits.

ASSESSMENT RESULTS

The SRC for the bridge is "**C**" for lower level earthquake ground motion and "**B**" for upper level earthquake ground motion.

RETROFITS REQUIRED

Bearing replacements and seat width improvements are not required at the abutments. Additional retrofits may be required if further seismic evaluation is needed.

RECOMMENDATIONS FOR FURTHER SEISMIC EVALUATION

For the lower level earthquake ground motion, it is recommended that capacity/demand ratios for bridge components are calculated as per Section 5.4 of the referenced manual. For the upper level earthquake ground motion, it is recommended that the capacities of the bearings are checked as per Section 5.2 of the referenced manual.

Retrofit cost estimates will be provided after any further required seismic evaluations are completed.

You created this PDF from an application that is not licensed to print to novaPDF printer (http://www.novapdf.com)

ENGINEERS
DESIGN BUILD
TECHNICAL RESOURCES
OPERATIONS

C&S Companies

C&S Engineers, Inc.
Syracuse Hancock International Airport
Syracuse, NY 13212
phone 315-455-2000
fax 315-455-9667
www.cscos.com

TECHNICAL MEMORANDUM

TO: **FILE (190.514.001)**

FROM: **PAUL BYRNE, P.E.**
NYSPE 055928

DATE: **JUNE 4, 2014**

C&S PROJECT NO.: 190.514.001

RE: **NEW YORK STATE DEPARTMENT OF TRANSPORTATION**
D031085; PIN 3501.60; I-81 Opportunities, BIN 1050779 Fatigue Evaluation

---

This memorandum documents a fatigue evaluation conducted for the existing Interstate 81 Viaduct Project. Existing structures with AASHTO Category D, E, and E' fatigue-prone details require 100% hands-on inspection unless proven to be exempt. The purpose of the evaluation is to assess the remaining life of fatigue-prone components.

EVALUATION PROCEDURES

The fatigue evaluation was performed in accordance with the AASHTO Guide Specification for Fatigue Evaluations of Existing Steel Bridges, 1990. Fatigue-prone welds identified in the biennial inspection reports were located on record drawings and confirmed visually in the field. Additional information concerning fatigue-prone welds located in BIN folders was also obtained and reviewed prior to inspection.

EVALUATION RESULTS

The results of the fatigue evaluation of the existing bridge are shown below. The remaining safe fatigue life of the interior fatigue components have been **exhausted**.

Fatigue Detail Location	Remaining Safe Fatigue Life (Years)	Remaining Mean Fatigue Life (Years)
Span 1, Exterior Girders G1 and G6, End of Bottom Flange Cover Plate	Infinite	Infinite
Span 1, Interior Girders G2 and G3, End of Bottom Flange Cover Plate	-28.91	24.75
Span 1, Interior Girders G4 and G5, End of Bottom Flange Cover Plate	-24.70	45.44

E. Recommendations

The purpose of this deck evaluation is to document and determine existing conditions of the deck. It will be used as a tool for developing the scope of work and cost estimates for the development and comparison of alternatives for the overall project.

The total damaged area is approximately 40% of the total deck area. Due to the age, condition and chloride-ion content of the bridge deck concrete, the bridge deck should be rehabilitated or replaced to meet current design standards and to mitigate excessive future maintenance costs.

Option 1 – Scarify and Bridge Deck Overlay
The maximum service life this option would provide is 25 years. The design life of this project is 30 years (ETC + 30). This option does not meet the project objective of obtaining 30+ years of service life.

Option 2 – Bridge Deck Rehabilitation with 100% Deep Removal
This option will involve partial depth reconstruction with top mat rebar exposure of the entire bridge deck to remove the chloride contaminated concrete (100% deep removal). The existing bridge deck thickness is 9 ¾” with nearly 4” of concrete cover over the top mat of reinforcing. The proposed partial depth reconstruction will provide the standard 9 ½” bridge deck thickness. The existing top mat of reinforcing bars will be removed and replaced to accommodate the standard 3” of concrete cover. The existing non-conforming parapet walls, curbs and railing will be removed and replaced with single-slope concrete barrier. The existing deteriorated bridge joints will be replaced with armorless bridge joints. The Level 1 Load Rating for the final condition was found to be acceptable. This option would provide a service life of 35 years to the bridge deck. The construction cost of this option is $ 0.659 million.

Option 3 – Bridge Deck Replacement with Cast-In-Place Concrete

This option would involve the complete removal of the bridge deck, bridge deck joints, single-slope barrier along the median and parapet walls down to the existing steel girders. The bridge deck would be replaced with a new concrete deck, single-slope concrete barrier and new armorless bridge joints. The new bridge deck would be 9 ½" standard thicknesses as compared to the 9 ¾" existing thickness. The Level 1 Load Rating for the final condition was found to be acceptable. This option would provide a service life of 40 years to the bridge deck. The construction cost of this option is $ 0.754 million.

Option 4 – Bridge Deck Replacement with Pre-cast Concrete Deck Panels

This option will have the highest construction cost of all the options; however, traffic control costs may be lower due to the reduced construction time. Comparison of accelerated construction versus conventional construction is beyond the scope of work for this project at this time.

IN-DEPTH INSPECTION REPORT

D031085 P.I.N. 3501.60

B.I.N. 1051159

TEAM LEADER	Bruce Opalka, P.E.	60413
		NYSPE LICENSE #

ASSISTANT TEAM LEADER	Seth Kaeuper, P.E.
ASSISTANT TEAM LEADER	Dustin Trivisonno
ASSISTANT TEAM LEADER	Michael Rode

FEATURE CARRIED	I - 690
FEATURE CROSSED	Peat Street

DATE FIELD WORK BEGAN	January 14, 2014
DATE FIELD WORK COMPLETED	January 14, 2014

TABLE OF CONTENTS

- TP 349 & 350
- IN-DEPTH CONDITION DOCUMENTATION
- IN-DEPTH PHOTO DOCUMENTATION
- ASBESTOS REPORT

TP 349 & TP 350

BRIDGE ELEMENT RATINGS

Inspection Date: 4/24/2013 RC: 33 BIN: 1051159

Bridge Ratings

Carried: 690I 690I33012044 Crossed: PEAT STREET CheckValue: 1,804,735,152

Inspection Agency: 10 - NYSDOT Type of Inspection: 1 - BIENNIAL
GTMS: 302 -- Steel - Stringer/Multi-Beam or Girder
POSTINGS: See Gen Rec Page 1 for Postings at time of inspection.
Further Investigation Needed: No
State Highway Number: 66-15 Milepoint: 10.65 AADT/Yr: 94900 / 2006
Orientation: 2 - Northeast Political Unit: 2055 - City of SYRACUSE Year Built: 1968
Total Spans: 1 Ramp Bridge Attached To Span: NA BIN: NA
General Recommendation: 5 Computed Condition Rating: 5.172

Abutment Ratings:	**Beg Abut**	**End Abut**
Joint with Deck	5	5
Bearings, Bolts, Pads	4	4
Seats and Pedestals	5	5
Backwall	5	5
Stem (Breastwall)	4	4
Erosion or Scour	6	5
Footings	9	9
Piles	9	9
Recommendation	4	4

Wingwall Ratings:	**Beg Abut**	**End Abut**
Walls	5	5
Footings	9	9
Erosion or Scour	6	6
Piles	9	9

Channel Ratings:	**Channel**
Stream Alignment	8
Erosion and Scour	8
Waterway Opening	8
Bank Protection	8

Approach Ratings:	**Approaches**
Drainage	5
Embankment	5
Settlement	7
Erosion	6
Pavement	7
Guide Railing	7

Number of Flags Issued:

RED: 0 Yellow: 0 Safety: 0

Vulnerability Reviews Recommended: 1=Yes, 2=No, 3=NA, X=NotActive

Hydraulic: 3	Overload: X	Steel: 2
Collision: 2	Concrete: X	Seismic: X

Inspector's Signature: CheckValue: 1,804,735,152 Date: 4/24/2013

Peter Riehlman,PE () (Inspector ID:3000052)

Signed copy of this inspection report is available in the appropriate NYSDOT Regional Office

Reviewed By: Date: 5/13/2013

James R. Manning,PE () (QC ID:3000023)

Signed copy of this inspection report is available in the appropriate NYSDOT Regional Office

Inspection Date: 4/24/2013 RC: 33 BIN: 1051159

Span Ratings

Carried: 690I 690I33012044 Crossed: PEAT STREET CheckValue: 1,804,735,152

Deck Element Ratings:	**001**
Wearing Surface	7
Curbs	5
Sidewalks, Fascias	7
Railings, Parapets	7
Scuppers	8
Gratings	8
Median	7
Mono Deck Surface	6

Superstructure Ratings:	**001**
Structural Deck	6
Primary Members	5
Secondary Members	6
Paint	5
Joints	8
Recommendation	5

Pier Ratings:	**001**
Bearings, Bolts, Pads	8
Pedestals	8
Top of Cap or Beam	8
Stem Solid Pier	8
Cap Beam	8
Pier Columns	8
Footings	8
Erosion or Scour	8
Piles	8
Recommendation	8

Utility Ratings:	**001**
Lighting	3
Sign Structure	8
Utilities and Support	8

Field Notes:

Field Date	Arrival	Departure	Temp (C)	Temp (F)	Weather Conditions
4/23/2013	11:00:00 AM	1:00:00 PM		55	cldy.
4/24/2013	11:00:00 AM	12:30:00 PM		55	cldy.

IN-DEPTH CONDITION DOCUMENTATION

IN DEPTH INSPECTION REPORT

BIN 1051159

Visual Inspection

A new monodeck, parapets, and approaches were installed in 2012 under contract D262027.

Cracks, spalls, and other field observations are shown on the plans. Below is a brief summary of conditions for each feature.

Superstructure

Deck – Bridge Deck Evaluation not required. A new deck was installed in 2012.

Steel – See Structural Steel Inspection Summary

Bearings – Bearing elements typically have rust scale, with outer bearings having heavy rust scale.

Substructure

West Abutment – The concrete backwall contained spalling concrete on the south end above pedestals 11 through 14. The concrete stem contained areas of delaminated concrete beneath pedestals 12 through 14. Full height cracks in the stem are located south of pedestals 3, 5 and 12. The pedestals contained minor isolated areas of delaminated and cracked concrete. The construction joints near pedestals 6 and 10 have water seepage to ground level.

East Abutment – The concrete backwall contained minor isolated areas of delaminated concrete and cracking. The stem exhibited delaminated concrete beneath pedestals 13 and 14. Pedestal 7 and 8 contained areas of spalling concrete on the west faces. The construction joints near pedestals 5, 11, and 14 have water seepage to ground level.

STRUCTURAL STEEL INSPECTION SUMMARY

BIN 1051159

Special Emphasis Inspection Required

Non-Redundant/Fracture Critical Members – No

Pin and Hangers – No

Fatigue-Prone Welds – Yes

Non-Categorized Fatigue-Prone Details – No

Other (Specified in Text) – No

Special Emphasis Details

The cover plate welds on the interior tension flanges require 100% hands on inspection. The safe life was exhausted in 1996. Upon inspection no defects were observed.

Overall Steel Condition

The steel showed no sign of major deterioration. There were no isolated pockets of major section loss and no areas of concern were observed.

Paint

The paint showed signs of deterioration with rust starting to show on the edges of the steel.

Section Loss

Due to the age of the steel a blanket 5% section loss should be used in load rating.

FED. ROAD DIV. NO.	STATE	FEDERAL AID PROJECT NO.	SHEET NO.	TOT. SHEETS
1	N. Y.	I-690-2(20)	144	286

INTERSTATE ROUTE CONNECTION 570
FORMAN AVE. TO ERICKSON ST., SYRACUSE

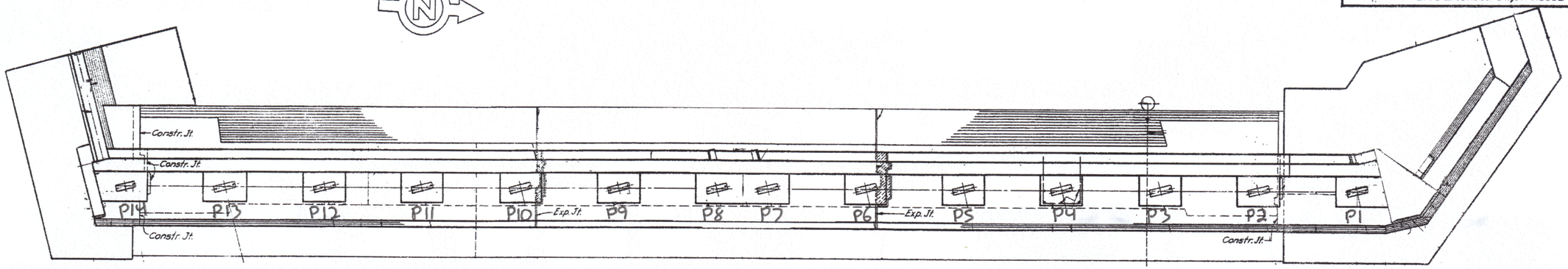

General Notes:

- The construction joints exhibit water seepage to ground level.
- The concrete wingwalls appeared in good condition with only minor isolated delamination and cracking.
- In general, the delamination identified sounded shallow and may not go behind rebar.
- All bearings have typical rust

STEEL STRUCTURE

- Steel appears to be in good condition with less than 5% loss.
- Welds on cover plates. Appear in good condition with no visible cracks.
- Paint is failing in places and is flaking off.

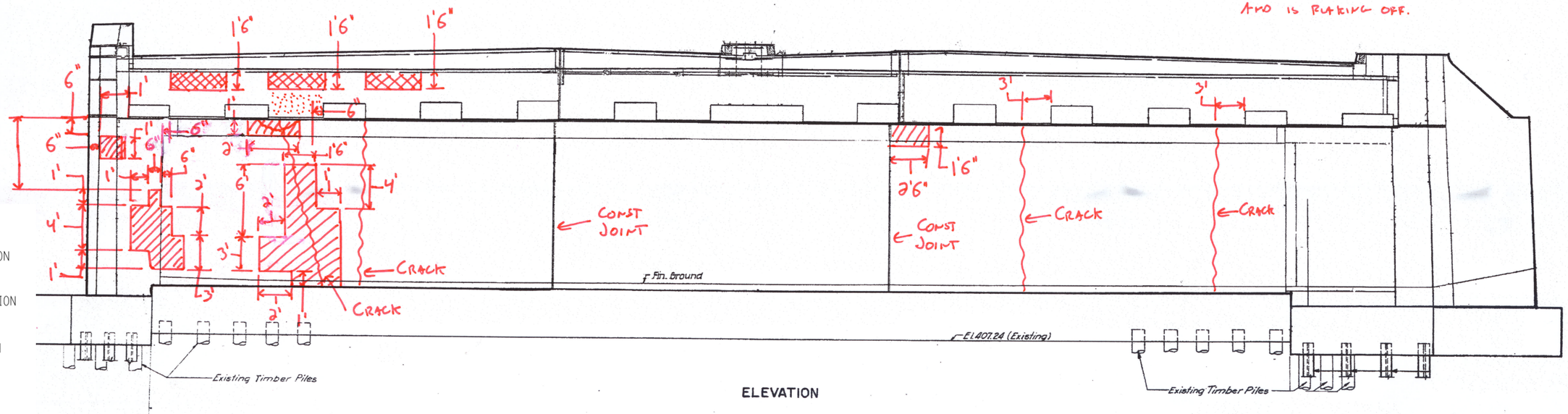

ELEVATION

LEGEND

- C-X — CORE LOCATION
- XX — PHOTO LOCATION
- DELAMINATION
- SPALLING
- CRACK
- MAP CRACKING
- MOISTURE

NOTES:

1. For Sections see Dwg. No. 483.
2. For Exp. and Construction Joint Details see Dwg. No. BT 3.
3. All bearing elevations are to bottom of pad under bearings.
4. For Elevations M-M and N-N see Dwg. No. 484.
5. For Anchor Bolt Detail see Dwg. No. 486.
6. Dimensions and elevations of existing structure as shown on the Plans to be verified in the field.

WEST ABUTMENT

H.G.S. AT PEAT STREET

WEST ABUTMENT-SH. 1

DRAWING NO.	DATE	SCALE	KING & GAVARIS CONSULTING ENGINEERS NEW YORK
482	12.15.65	4"=1'0"	

BIN 1051159
RTE 690 over PEAT ST

F.I.C. 66-15

FED. ROAD DIV. NO.	STATE	FEDERAL AID PROJECT NO	SHEET NO	TOTAL SHEETS
1	N.Y.	I-690-3(20)	147	286

INTERSTATE ROUTE CONNECTION 570
FORMAN AVE. TO ERICKSON ST., SYRACUSE

LEGEND

- C-X — CORE LOCATION
- XX — PHOTO LOCATION
- DELAMINATION
- SPALLING
- CRACK
- MAP CRACKING
- MOISTURE

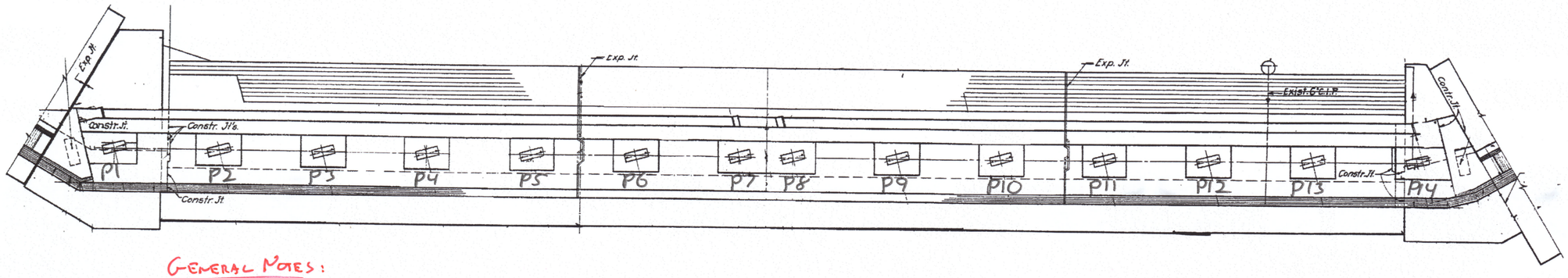

General Notes:

- The Construction Joints Exhibit Water Seepage to Ground Level
- The Concrete Wingwalls Appeared in Good Condition with only Minor Isolated Delamination and Cracking.
- In General, The Delamination Encountered Sounded Hollow and May not Go Behind Rebar.
- All Bearings Have Typical Rust.

Steel Structure:

- Steel Appears to be in Good Condition with Less than 5% Loss
- Welds on Cover Plates Appear in Good Condition with No Visible Cracks
- Paint is Failing in Places and is Flaking Off

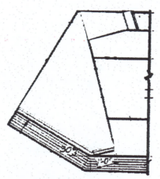

SECTION F-F

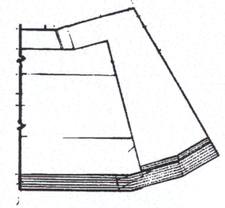

SECTION G-G

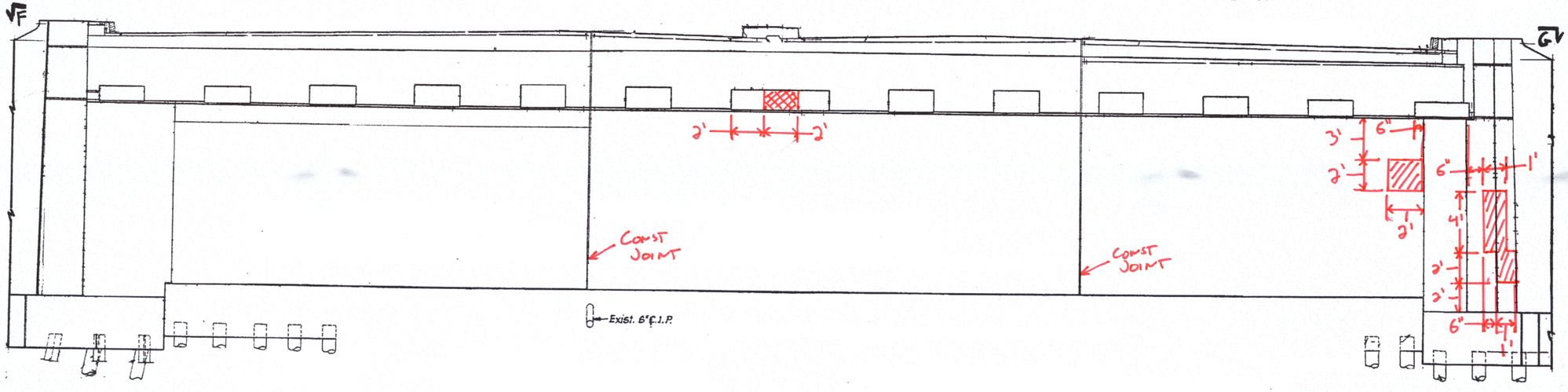

NOTES:
1. For Sections and Anchor Bolt Detail see Dwg. No. 486.
2. For Exp., Constr. and Contr. Joint Details see Dwg. No. 873.
3. All bearing elevations are to bottom of pad under bearings.
4. Dimensions and elevations of existing structure as shown on the Plans to be verified in the field.

EAST ABUTMENT

H.G.S. AT
PEAT STREET
EAST ABUTMENT - SH. 1

DRAWING NO.	DATE	SCALE	KING & GAVARIS CONSULTING ENGINEERS NEW YORK
485	12.15.65	As noted	

BIN 1051159
RTE 690 over PEAT ST

IN-DEPTH PHOTO DOCUMENTATION

C&S Engineers, Inc.
499 Col. Eileen Collins Blvd.
Syracuse, New York 13212
Phone: (315) 455-2000
Fax: (315) 455-9667
www.cscos.com

I-690 over Peat Street - BIN 1051159



DESCRIPTION: WEST ABUTMENT – SOUTH END BELOW CHEEKWALL – DELAMINATED CONCRETE

PHOTO 1



DESCRIPTION: WEST ABUTMENT – STEM – BELOW PEDESTAL 14 – DELAMINATED CONCRETE

PHOTO 2

C&S Engineers, Inc.
499 Col. Eileen Collins Blvd.
Syracuse, New York 13212
Phone: (315) 455-2000
Fax: (315) 455-9667
www.cscos.com

I-690 over Peat Street - BIN 1051159



DESCRIPTION: WEST ABUTMENT – STEM – BELOW PEDESTALS 13 AND 12 – CRACK WITH SURRONDING DELAMINATED CONCRETE

PHOTO 3



DESCRIPTION: WEST ABUTMENT – STEM – BELOW PEDESTAL 13 – CRACKS WITH SURRONDING DELAMINATED CONCRETE

PHOTO 4

C&S Engineers, Inc.
499 Col. Eileen Collins Blvd.
Syracuse, New York 13212
Phone: (315) 455-2000
Fax: (315) 455-9667
www.cscos.com

I-690 over Peat Street - BIN 1051159



DESCRIPTION: WEST ABUTMENT – BACKWALL – BETWEEN PEDESTALS 13 AND 14 – SPALLING CONCRETE

PHOTO 5



DESCRIPTION: WEST ABUTMENT – BACKWALL – BETWEEN PEDESTALS 12 AND 13 – SPALLING CONCRETE AND RUST/MOISTURE STAINS

PHOTO 6

C&S Engineers, Inc.
499 Col. Eileen Collins Blvd.
Syracuse, New York 13212
Phone: (315) 455-2000
Fax: (315) 455-9667
www.cscos.com

I-690 over Peat Street - BIN 1051159



DESCRIPTION: WEST ABUTMENT – STEM – BELOW PEDESTAL 12 – CRACK FULL HEIGHT OF STEM

PHOTO 7

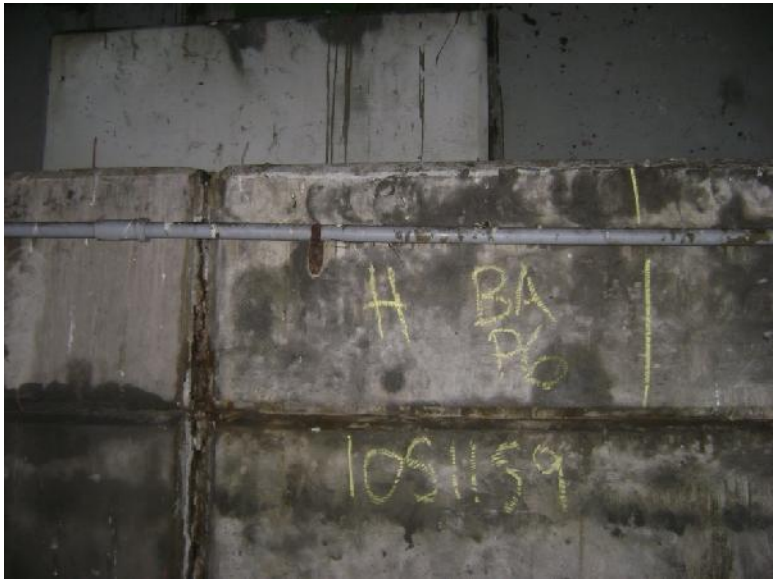

DESCRIPTION: WEST ABUTMENT – STEM – BELOW PEDESTAL 6 – DELAMINATED CONCRETE

PHOTO 8

C&S Engineers, Inc.
499 Col. Eileen Collins Blvd.
Syracuse, New York 13212
Phone: (315) 455-2000
Fax: (315) 455-9667
www.cscos.com

I-690 over Peat Street - BIN 1051159



DESCRIPTION: WEST ABUTMENT – STEM – BELOW PEDESTALS 4 AND 5 – CRACK FULL HEIGHT

PHOTO 9



DESCRIPTION: WEST ABUTMENT – STEM – BELOW PEDESTALS 2 AND 3 – CRACK FULL HEIGHT

PHOTO 10

C&S Engineers, Inc.
499 Col. Eileen Collins Blvd.
Syracuse, New York 13212
Phone: (315) 455-2000
Fax: (315) 455-9667
www.cscos.com

I-690 over Peat Street - BIN 1051159



DESCRIPTION: WEST ABUTMENT – BETWEEN BEARINGS 7 AND 8 – OPEN CENTER JOINT BETWEEN BRIDGE EAST BOUND AND WESTBOUND LANES

PHOTO 11



DESCRIPTION: WEST ABUTMENT – PEDESTAL 4 – TYPICAL CONCRETE

PHOTO 12

C&S Engineers, Inc.
499 Col. Eileen Collins Blvd.
Syracuse, New York 13212
Phone: (315) 455-2000
Fax: (315) 455-9667
www.cscos.com

I-690 over Peat Street - BIN 1051159



DESCRIPTION: WEST ABUTMENT – BEARING 4 – TYPICAL RUST SCALE

PHOTO 13



DESCRIPTION: WEST ABUTMENT – BEARING 7 – RUST SCALE

PHOTO 14

C&S Engineers, Inc.
499 Col. Eileen Collins Blvd.
Syracuse, New York 13212
Phone: (315) 455-2000
Fax: (315) 455-9667
www.cscos.com

I-690 over Peat Street - BIN 1051159



DESCRIPTION: WEST ABUTMENT – CONSTRUCTION JOINT NEAR PEDESTAL 6

PHOTO 15



DESCRIPTION: WEST ABUTMENT – CONSTRUCTION JOINT NEAR PEDESTAL 10

PHOTO 16

C&S Engineers, Inc.
499 Col. Eileen Collins Blvd.
Syracuse, New York 13212
Phone: (315) 455-2000
Fax: (315) 455-9667
www.cscos.com

I-690 over Peat Street - BIN 1051159



DESCRIPTION: GIRDER 3 – COVERPLATE – WEST END – PEELING PAINT – TYPICAL

PHOTO 17



DESCRIPTION: GIRDER 11 – COVERPLATE – EAST END - TYPICAL

PHOTO 18

C&S Engineers, Inc.
499 Col. Eileen Collins Blvd.
Syracuse, New York 13212
Phone: (315) 455-2000
Fax: (315) 455-9667
www.cscos.com

I-690 over Peat Street - BIN 1051159



DESCRIPTION: UNDERDECK

PHOTO 19



DESCRIPTION: UNDERDECK – BAY 12 – FACING EAST – TYPICAL

PHOTO 20

C&S Engineers, Inc.
499 Col. Eileen Collins Blvd.
Syracuse, New York 13212
Phone: (315) 455-2000
Fax: (315) 455-9667
www.cscos.com

I-690 over Peat Street - BIN 1051159



DESCRIPTION: EAST ABUTMENT – STEM – UNDER PEDESTAL 14 – DELAMINATED CONCRETE

PHOTO 21



DESCRIPTION: EAST ABUTMENT – STEM – NEAR PEDESTAL 14 – DELAMINATED CONCRETE

PHOTO 22

C&S Engineers, Inc.
499 Col. Eileen Collins Blvd.
Syracuse, New York 13212
Phone: (315) 455-2000
Fax: (315) 455-9667
www.cscos.com

I-690 over Peat Street - BIN 1051159



DESCRIPTION: EAST ABUTMENT – PEDESTAL – BETWEEN BEARINGS 7 AND 8 – DELAMINATED CONCRETE

PHOTO 23



DESCRIPTION: EAST ABUTMENT – BETWEEN BEARINGS 7 AND 8 – OPEN CENTER JOINT BETWEEN BRIDGE EAST BOUND AND WEST BOUND LANES

PHOTO 24

C&S Engineers, Inc.
499 Col. Eileen Collins Blvd.
Syracuse, New York 13212
Phone: (315) 455-2000
Fax: (315) 455-9667
www.cscos.com

I-690 over Peat Street - BIN 1051159



DESCRIPTION: EAST ABUTMENT – CONSTRUCTION JOINT NEAR PEDESTAL 5

PHOTO 25



DESCRIPTION: EAST ABUTMENT – CONSTRUCTION JOINT NEAR PEDESTAL 11

PHOTO 26

C&S Engineers, Inc.
499 Col. Eileen Collins Blvd.
Syracuse, New York 13212
Phone: (315) 455-2000
Fax: (315) 455-9667
www.cscos.com

I-690 over Peat Street - BIN 1051159



DESCRIPTION: EAST ABUTMENT – SOUTH WINGWALL – CONSTRUCTION JOINT NEAR PEDESTAL 14

PHOTO 27



DESCRIPTION: SOUTH FASCIA – FACING EAST

PHOTO 28

C&S Engineers, Inc.
499 Col. Eileen Collins Blvd.
Syracuse, New York 13212
Phone: (315) 455-2000
Fax: (315) 455-9667
www.cscos.com

I-690 over Peat Street - BIN 1051159



DESCRIPTION: NORTH FASCIA – FACING EAST

PHOTO 29



DESCRIPTION: NORTH WEST WINGWAL – FACING SOUTHWEST

PHOTO 30

C&S Engineers, Inc.
499 Col. Eileen Collins Blvd.
Syracuse, New York 13212
Phone: (315) 455-2000
Fax: (315) 455-9667
www.cscos.com

I-690 over Peat Street - BIN 1051159



DESCRIPTION: WEST ABUTMENT – FACING SOUTH

PHOTO 31



DESCRIPTION: SOUTHWEST WINGWALL FACING NORTHWEST

PHOTO 32

C&S Engineers, Inc.
499 Col. Eileen Collins Blvd.
Syracuse, New York 13212
Phone: (315) 455-2000
Fax: (315) 455-9667
www.cscos.com

I-690 over Peat Street - BIN 1051159



DESCRIPTION: NORTHEAST WINGWALL – FACING SOUTHEAST

PHOTO 33



DESCRIPTION: EAST ABUTMENT – FACING NORTH

PHOTO 34

C&S Engineers, Inc.
499 Col. Eileen Collins Blvd.
Syracuse, New York 13212
Phone: (315) 455-2000
Fax: (315) 455-9667
www.cscos.com

I-690 over Peat Street - BIN 1051159



DESCRIPTION: SOUTHEAST WINGWALL – FACING NORTHEAST

PHOTO 35



DESCRIPTION: EASTBOUND DECK – BEGIN APPROACH FACING EAST

PHOTO 36

C&S Engineers, Inc.
499 Col. Eileen Collins Blvd.
Syracuse, New York 13212
Phone: (315) 455-2000
Fax: (315) 455-9667
www.cscos.com

I-690 over Peat Street - BIN 1051159



DESCRIPTION: WESTBOUND DECK – END APPROACH FACING WEST

PHOTO 37

DESCRIPTION:

PHOTO

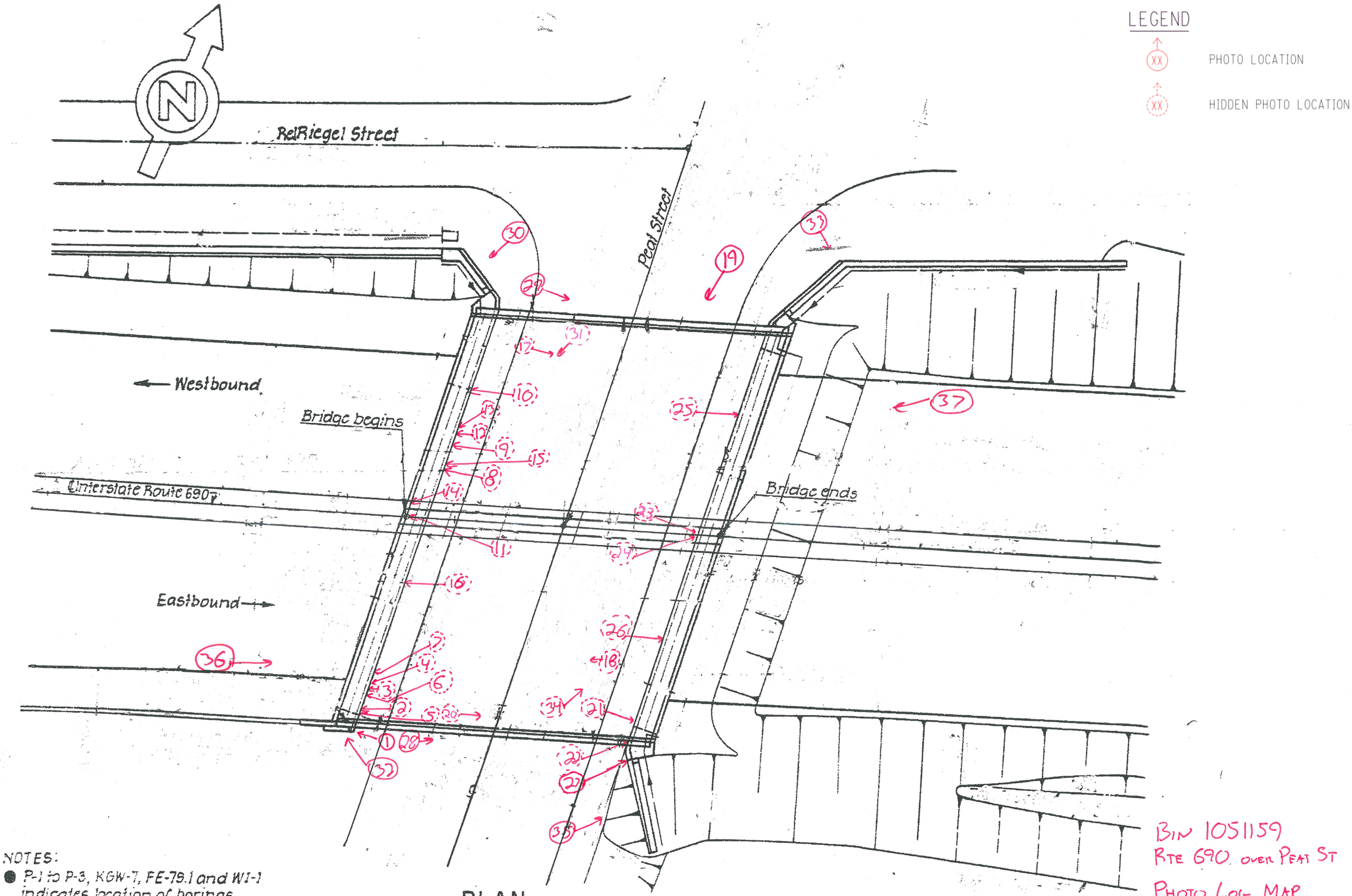

NOTES:

- P-1 to P-3, KGW-1, FE-79.1 and WI-1 indicates location of borings
  All pipes shown, except Item IIH-6, are included in Highway Estimate

PLAN
Scale: 1"=20'

BIN 1051159
RTE 690 over PEAT ST
PHOTO LOG MAP

ASBESTOS DOCUMENTATION

ASBESTOS DOCUMENTATION FROM WATTS ARCHITECTURE & ENGINEERING, INC.

(WILL REPLACE BIN FOLDER ASBESTOS REPORT UPON COMPLETION)

HES

HUDSON ENVIRONMENTAL SERVICES, INC.

Mail: 22 Hudson Falls Rd., So. Glens Falls, NY 12803
Delivery: 211 Ferry Blvd., So. Glens Falls, NY 12803
Phone: 518/747-1060 Fax: 518/747-1062

ANALYTICAL TEST RESULTS
N.Y.S.D.O.H. LAB ID#11140
*ANALYZED BY N.Y.S.D.O.H. LAB ID#10898

CLIENT: NYSDOT Region 3

SAMPLE DESCRIPTION: See Below

MATRIX: Solid

LOCATION: BIN 1051159

H.E.S. #: See Below

DATE SAMPLED: 05/09/03

TIME SAMPLED: 13:10-14:00

DATE SAMPLE RECD: 05/28/03

TYPE SAMPLE: Grab

SAMPLER: K.Way/NYSDOT Region 3

NOB BULK MATERIAL ANALYSIS FOR ASBESTOS

TEST METHOD:EPA-600 93/116 JULY 1993 NYSDOH ELAP 198.1 AND 198.4

HES LAB ID#: 030528E	E01	E02	E03
LAB ID#: E03	1374	1375	1376
CLIENT: SAMPLE ID/DESCRIPTION	1051159 Beg G-3 Bottom Flange	1051159 Beg G-6 Bottom Flange	1051159 Beg G-9 Bottom Flange
COLOR	Green	Green	Green
HOMOGENEOUS(YES/NO)	Yes	Yes	Yes
ORGANIC %	44	48	43
ACID-SOLUBLE INORGANICS %	7	8	9
INSOL NON-ASBESTOS INORGANIC %	49	44	48
ASBESTOS ANALYSIS			
CHRYSOTILE %			
AMOSITE %			
CROCIDOLITE %			
OTHER AMPHIBOLE %			
TOTAL ASBESTOS % (PLM)	ND	ND	ND
ASBESTOS ANALYSIS			
TYPE OF ASBESTOS			
PERCENTAGE OF ASBESTOS (TEM)	ND	ND	ND
TOTAL	100	100	100

Approval By: [signature]

Date: 6/12/03

Hudson Environmental Services, Inc. certifies that the services provided were performed in accordance with the New York State Department of Health, Environmental Laboratory Approval Program certification manual. This report shall not be reproduced without written consent from HES, Inc. In the event of an error, HES's sole responsibility will be to perform reanalysis at its own expense. HES, Inc. assumes no other liability for damages incurred from the interpretation or use of the analysis provided.

(OVER)

HUDSON ENVIRONMENTAL SERVICES, INC.

Mail: 22 Hudson Falls Road, South Glens Falls, NY 12803
Delivery: 211 Ferry Blvd., South Glens Falls, NY 12803
Phone: 518/747-1060 Fax: 518/747-1062

CHAIN OF CUSTODY RECORD/ Lab Work Request

Client: NYS Dept. of Transportation-Region 3
Client Contact/Person #: Christopher Anderson
Project Location: B.I.N. 1051159
Purchase Order:
HES Contact: William Frawley

Mail Address: NYS Dept. of Transpoltation
333 E. Washington Street
Syracuse, NY 13202
Phone #: (315) 428-4628

HES Use Only Lab ID	Sample ID / Description	Date Collected	TIME A=a.m. P=p.m.		SAMPLE TYPE C=Composite G=Grab MATRIX	C	G	# Conts.	ANALYSIS REQUIRED
30528E01	(1) BEG G-3 Bottom FLANGE	5/14/03	13:10	A/P	SO		X	1	Asbestos Bulk - NOB
30528E02	(2) BEG G-6 Bottom FLANGE	"	13:30	A/P					
30528E03	(3) BEG G-9 Bottom FLANGE	"	13:40	A/P					
				A/P					
				A/P					
				A/P					
				A/P					
				A/P					

Matrix: SL - Sludge; O - Oil; SE - Sediment; SO - Soil; DW - Drinking Water; GW - Ground Water; SW - Surface Water; L - Leachate; A - Air; WI - Wipe; DS - Drum Solids; DL - Drums Liquids; X - Other; WW - Waste Water

Special Instructions: Bridge coating - If PLM negative, TEM confirmation on all.

Sampled by: (Signature) Robert Way	Date/Time 5/15/03 15:00	Received by: (Signature)	Date/Time 5-16-03 11:45 AM
Relinquished by: (Signature)	Date/Time	Received by: (Signature)	Date/Time
Relinquished by: (Signature)	Date/Time	Received by: (Signature)	Date/Time
Dispatched by: (Signature)	Method of Shipment:		Date/Time
Received @ Laboratory:	Date/Time 5/28/03 10:25	Turnaround Time: Normal	Lab Approval:

WHITE - Lab Copy YELLOW - Sampler Copy PINK - Generator Copy

HES Use Only

Samples Were:
1. Shipped or Hand Delivered
NOTES:

2. Ambient or Chilled
NOTES:

3. Received Broken/ Leaking (Improperly Sealed)
Y N
NOTES:

4. Properly Preserved
NOTES: Y N

5. Received Within Holding Times
Y N
NOTES:

COC Tape Was:
1. Present on Outer Package Y N
2. Unbroken on Outer Package Y N
3. Present on Sample Y N
4. Unbroken on Sample
NOTES: Y N

COC Record Was:
1. Present at the Receipt of Samples Y N

Discrepancies Between Sample Labels and COC Record?
Y N
NOTES:

Jun-03-03 11:20A Ved P Kukreja, Ph.D. P.08

Asbestos Sampling Survey

Location:
BIN 1-05115-9
Interstate Route 690 over Peat Street

Prepared for:
New York State
Department of Transportation

PIN 3804.00.101

LaBella Project No. 97132

May, 1998

Table of Contents

Page

I. Project Summary 1

II. Site Description 1

III. Inspection Procedures 1

IV. Results 2

Certification 2

Figures and Table

I. Project Summary

In accordance with conditions of Term Agreement D010010, LaBella Associates, P.C. conducted an asbestos sampling survey of the Interstate Route 690 Bridge over Peat Street. Based on laboratory analyses of bulk samples collected, the following materials were determined to contain asbestos:

BIN 1-05115-9 Interstate Route 690 over Peat Street

Type of Material	Estimated Amount
Sheet Packing	18.6 Square Meters
Caulking Compound	6.4 Linear Meters

II. Site Description

The Site is located in Onondaga County, New York. For the purpose of this report, the Site consists of the Interstate Route 690 Bridge over Peat Street (See attached FIGURE 1 - Site Location Map).

III. Inspection Procedures

The following procedures were used to obtain the data for this Report:

A. A review of record drawings supplied by Region 3 personnel and a visual inspection of the subject structure were conducted to identify potential visible/accessible sources of asbestos-containing materials. Observations and notes were made to provide a description of the structure, and an estimate of the approximate amount, length, or area of ACM present.

B. Physical or operational constraints which might affect the removal of the ACM were identified and reported.

C. Bulk samples of suspected ACM were collected during the site inspection of the subject structure. Samples were taken from each homogeneous area that may contain ACM.

D. Samples were submitted for analysis. Preliminary PLM analyses of NOB materials were performed by LaBella Laboratories, a NYSDOH approved laboratory, to determine the presence and percentage of asbestos in each sample. TEM analyses of NOB materials, if necessary, were performed by EMSL Analytical, Inc. or New York Testing Laboratories, Inc.

E. Lab results were used to determine the approximate location, type, and amount of the verified ACM.

F. A drawing of the structure at the Site was created, in order to show sample locations and the approximate locations and amounts of confirmed ACM observed in accessible locations.

Only accessible areas were inspected. Inaccessible areas, such as areas within the bridge or the approaches to the bridge were not included in this inspection. No investigation was conducted by LaBella Associates to determine the presence of underground utilities on or in the immediate vicinity of the Site. Actual sample locations are shown in the attached FIGURE 2. Results of bulk sample analyses are tabulated in the attached TABLE.

IV. Results

BIN 1-05115-9 Interstate Route 690 over Peat Street

Sheet Packing

Asbestos-containing sheet packing is located between the tops of the abutments and the deck slab at both ends of the bridge. Most of this material is presently covered by the bridge deck, although the edges of this sheet packing are exposed and visible at various locations.

It is estimated that the total amount of this asbestos-containing sheet packing material on the bridge is approximately 18.6 square meters. This estimate is based on field measurements taken at the time of the site visit.

The approximate locations of this asbestos-containing sheet packing are shown in FIGURE 2.

Caulking Compound

Asbestos-containing caulking compound is located around some of the guide rail base plates on the south parapet of the bridge. It is estimated that the total amount of this caulking compound is approximately 6.4 linear meters. This estimate is based on field measurements taken at the time of the site visit.

The approximate locations of this material are shown in the attached FIGURE 2. Analytical results of bulk samples collected are summarized in the attached TABLE.

Certification

LaBella Associates, P.C. certifies the accuracy of this report, to the best of our knowledge, based on the information collected as described in the Inspection Procedures Section of this investigation.

Figures & Table

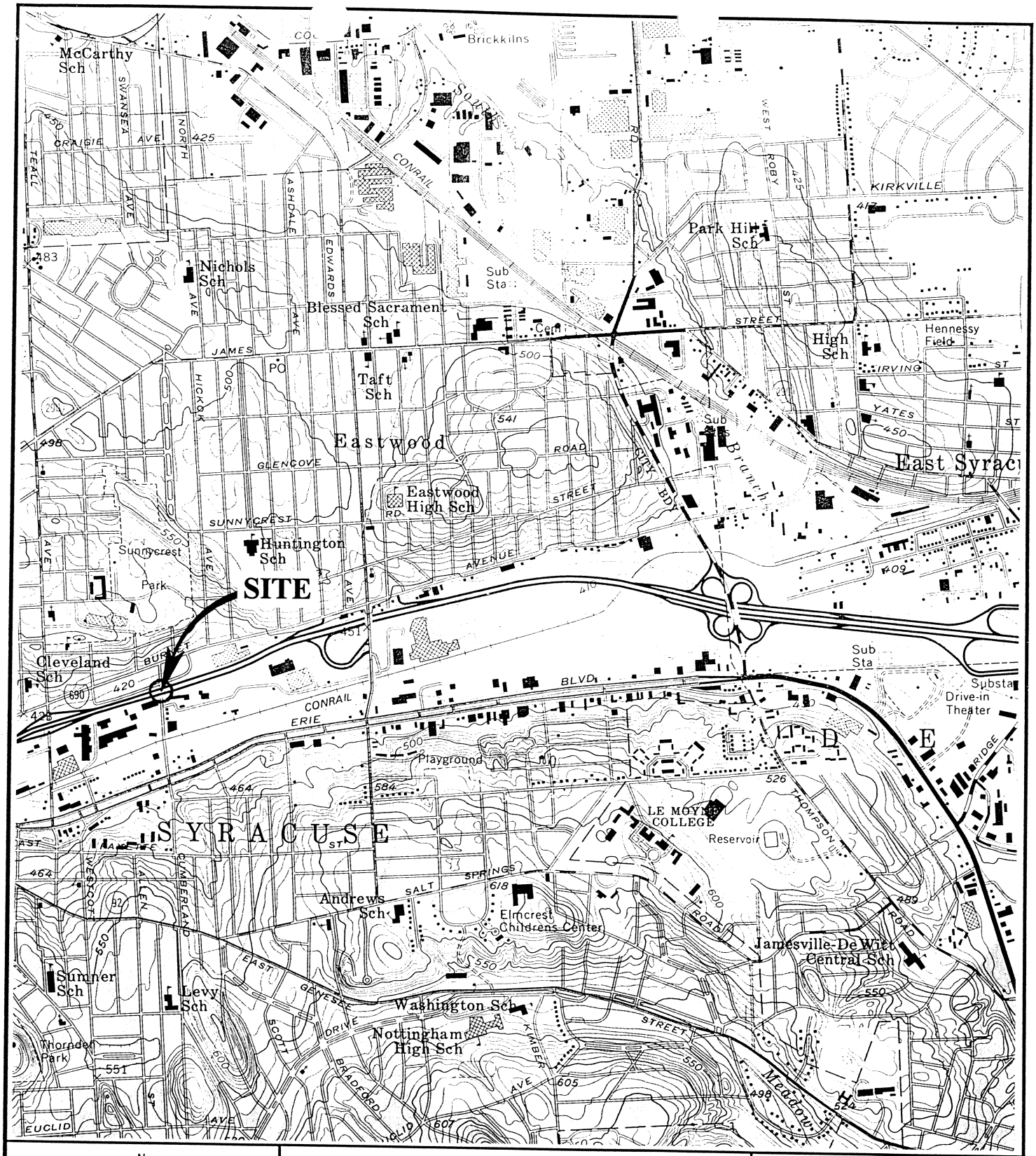

N

SCALE: 1" = 2000'

FIGURE 1
Site Location Map

I-690 OVER PEAT STREET

BIN 1-05115-9

LABELLA

PROJECT NO. 97132

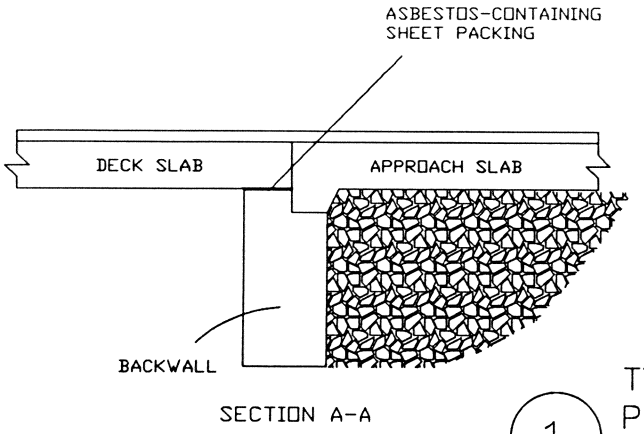

SECTION A-A

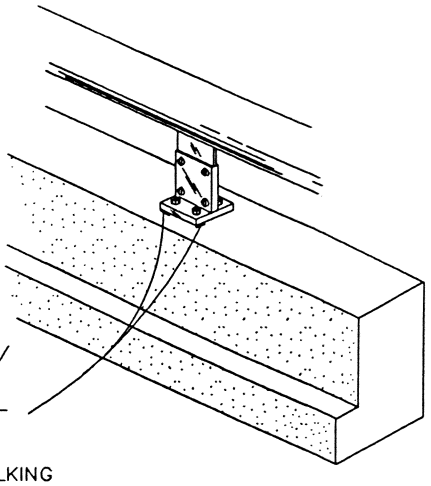

1 TYPICAL RAILING/ PARAPET DETAIL

SPOTTY APPLICATION OF ASBESTOS-CONTAINING CAULKING COMPOUND AROUND SOME GUIDE RAIL BASE PLATES- SOUTH PARAPET ONLY

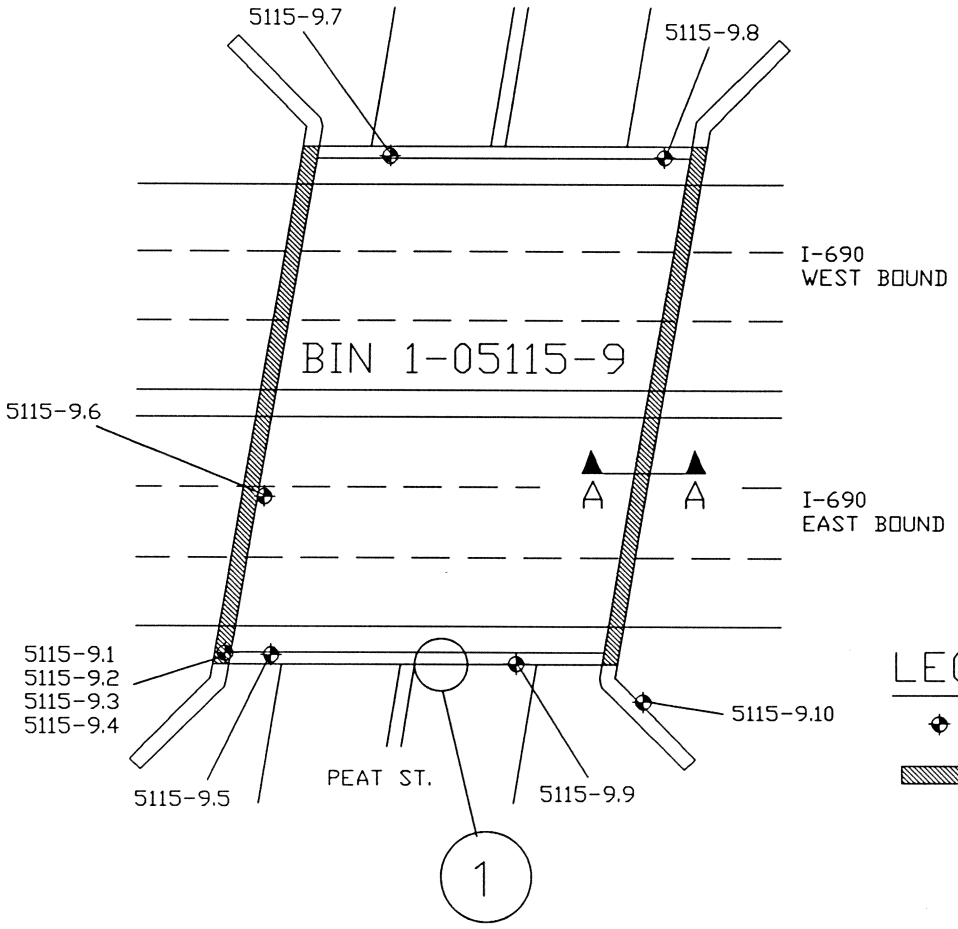

LEGEND

5115-9.1 SAMPLE LOCATION

ASBESTOS-CONTAINING SHEET PACKING

NORTH

	PROJECT TITLE: ASBESTOS SAMPLING SURVEY 16 BRIDGES, ONONDAGA COUNTY, NEW YORK	PROJECT NO. 97132 PIN 3804.00.101
	FIGURE 2: I-690 OVER PEAT STREET BIN 1-05115-9 SAMPLE LOCATIONS AND CONFIRMED ACM	NOT TO SCALE DATE: MAY, 1998

Bulk Sample Results Table

Asbestos Sampling Survey
BIN 1-05115-9
Interstate Route 690 Bridge over Peat Street
Onondaga County, New York
LaBella Project # 97132
PIN 3804.00.101

Sample #	Sample Location	Type of Material	Results % Asbestos	Amount of Material	Specification Item No.
5115-9.1	**Southwest Corner of Bridge Between Deck and Abutment**	**Sheet Packing**	**39% Chrysotile**	**18.6 Square Meters**	**15202.0627 (M)**
5115-9.2	Southwest Corner of Bridge Between Deck & Wing Wall	Tar Sealer	None Detected	N/A	N/A
5115-9.3	Southwest Corner of Bridge Beneath Bearing	Bearing Pad	None Detected	N/A	N/A
5115-9.4	Southwest Corner of Bridge on Pedestal	Masonry Coating	None Detected	N/A	N/A
5115-9.5	Southwest Corner of Bridge, on South I-Beam	Green Paint	None Detected	N/A	N/A
5115-9.6	West Side of Bridge, in Expansion Joint	White Caulk	None Detected	N/A	N/A
5115-9.7	North Parapet & Expansion Joint	Black Joint Filler	None Detected	N/A	N/A
5115-9.8	East Side of Bridge, on North I-Beam	Green Paint	None Detected	N/A	N/A
5115-9.9	**South Parapet, at Base of Guide Rail**	**Gray/Silver Caulk**	**14% Chrysotile**	**6.4 Linear Meters**	**15202.0629 (M)**
5115-9.10	Back Side of South East Wing Wall	Bituminous Water Proofing	None Detected	N/A	N/A

ENGINEERS
DESIGN BUILD
TECHNICAL RESOURCES
OPERATIONS

C&S Companies

C&S Engineers, Inc.
Syracuse Hancock International Airport
Syracuse, NY 13212
phone 315-455-2000
fax 315-455-9667
www.cscos.com

TECHNICAL MEMORANDUM

TO: FILE (190.514.001)

FROM: JESSICA S. BAUER, P.E.
NYSPE 084915

DATE: MARCH 7, 2014

C&S PROJECT NO.: 190.514.001

RE: SEISMIC ASSESSMENT SUMMARY
NEW YORK STATE DEPARTMENT OF TRANSPORTATION
D031085; PIN 3501.60; I-81

BIN: 1051159 Seismic Assessment

This memorandum summarizes the seismic assessment conducted for BIN 1051159 as part of the Interstate 81 Project in Syracuse, NY. The purpose of the assessment is to determine if seismic retrofits are warranted at the superstructure to substructure connection, and if further seismic evaluation of the structure is required. This memorandum will give the assessment results, retrofits required and recommendations for further seismic evaluation of the structure.

ASSESSMENT PROCEDURE

The seismic assessment was performed in accordance with the FHWA Seismic Retrofitting Manual for Highway Structures: Part 1 - Bridges, January 2006. As per the referenced manual, seismic assessment was performed for both lower level and upper level earthquake ground motion. The lower level earthquake ground motion has a reasonable likelihood of occurrence within the life of the bridge (50% probability of exceedance within a 75 year bridge life). The upper level earthquake ground motion has a finite likelihood of occurrence within the life of the bridge (7% probability of exceedance within a 75 year bridge life).

Values for the spectral acceleration for the Syracuse area used in the assessment are as follows:

- Lower Level Earthquake Ground Motion for a Short Period (0.2 seconds): $S_S = 0.0251$
- Lower Level Earthquake Ground Motion for a Long Period (1.0 seconds): $S_1 = 0.0076$
- Upper Level Earthquake Ground Motion for a Short Period (0.2 seconds): $S_S = 0.139$
- Upper Level Earthquake Ground Motion for a Long Period (1.0 seconds): $S_1 = 0.047$

These values are considered constant and are the same for all seismic assessments of bridges in the Syracuse area.

The Site Class is based on the soil conditions at the bridge location. It was determined that this parameter has little effect on the results of the seismic assessment because the spectral

acceleration values for the Syracuse area are small. Based on this, a site class of D was used for all seismic assessments of bridges in the Syracuse area.

Bridge parameters used in the seismic assessment were retrieved from the record drawings and WinBolts data.

The seismic assessment takes into account the anticipated service life, importance, and the seismic exposure of the bridge to determine a seismic retrofit category (SRC). The SRC is then used to determine seismic evaluation methods and retrofit measures. There are four SRCs, A through D. Seismic retrofit category A is the lowest category; bridges in this category do not require retrofits or further seismic evaluation. Seismic retrofit category D is the highest category; bridges in this category requiring the most rigorous seismic evaluations and retrofits.

ASSESSMENT RESULTS

The SRC for the bridge is "**C**" for lower level earthquake ground motion and "**B**" for upper level earthquake ground motion.

RETROFITS REQUIRED

Bearing replacements and seat width improvements are not required at the abutments. Additional retrofits may be required if further seismic evaluation is needed.

RECOMMENDATIONS FOR FURTHER SEISMIC EVALUATION

For the lower level earthquake ground motion, it is recommended that capacity/demand ratios for bridge components are calculated as per Section 5.4 of the referenced manual. For the upper level earthquake ground motion, it is recommended that the capacities of the bearings are checked as per Section 5.2 of the referenced manual.

Retrofit cost estimates will be provided after any further required seismic evaluations are completed.

ENGINEERS
DESIGN BUILD
TECHNICAL RESOURCES
OPERATIONS

C&S Companies

C&S Engineers, Inc.
Syracuse Hancock International Airport
Syracuse, NY 13212
phone 315-455-2000
fax 315-455-9667
www.cscos.com

TECHNICAL MEMORANDUM

TO: **FILE (190.514.001)**

FROM: **PAUL BYRNE, P.E.**
NYSPE 055928

DATE: **JUNE 14, 2014**

C&S PROJECT NO.: 190.514.001

RE: **NEW YORK STATE DEPARTMENT OF TRANSPORTATION**
D031085; PIN 3501.60; I-81 Opportunities, BIN 1051159 Fatigue Evaluation

---

This memorandum documents a fatigue evaluation conducted for the existing Interstate 81 Viaduct Project. Existing structures with AASHTO Category D, E, and E' fatigue-prone details require 100% hands-on inspection unless proven to be exempt. The purpose of the evaluation is to assess the remaining life of fatigue-prone components.

EVALUATION PROCEDURES

The fatigue evaluation was performed in accordance with the AASHTO Guide Specification for Fatigue Evaluations of Existing Steel Bridges, 1990. Fatigue-prone welds identified in the biennial inspection reports were located on record drawings and confirmed visually in the field. Additional information concerning fatigue-prone welds located in BIN folders was also obtained and reviewed prior to inspection.

EVALUATION RESULTS

The results of the fatigue evaluation of the existing bridge are shown below. The remaining safe fatigue life of the fatigue components has been **exhausted**.

Fatigue Detail Location	Remaining Safe Fatigue Life (Years)	Remaining Mean Fatigue Life (Years)
Span 1, Interior Girders S2-S6, S9-S13, End of Bottom Flange Cover Plate	-30.68	19.17
Span 1, Exterior Girders S7 and S8, End of Bottom Flange Cover Plate	-31.56	14.84

IN DEPTH INSPECTION REPORT

D031085 P.I.N. 3501.60

ELEMENT SPECIFIC BRIDGE WORK

B.I.N. 1051160

TEAM LEADER Bruce Opalka, P.E. 60413
NYSPE LICENSE #

ASSISTANT TEAM LEADER Chuck Brooks

ASSISTANT TEAM LEADER Jerry Getter

FEATURE CARRIED Midler Avenue

FEATURE CROSSED I-690

DATE FIELD WORK BEGAN 2/10/14

DATE FIELD WORK COMPLETED 2/11/14

TABLE OF CONTENTS

- TP 349 & 350
- BRIDGE CONDITION RATING
- IN-DEPTH CONDITION DOCUMENTATION
- IN-DEPTH PHOTO DOCUMENTATION
- ASBESTOS ASSESSMENT, DETAILS & LOCATIONS
- BRIDGE DECK EVALUATION

TP 349 & TP 350

BRIDGE ELEMENT RATINGS

Inspection Date: 9/22/2011 RC: 33 BIN: 1051160

Bridge Ratings

Carried: S. MIDLER AVENUE Crossed: 690I 690I33012050 CheckValue: 1,758,385,024

Inspection Agency: 10 - NYSDOT Type of Inspection: 1 - BIENNIAL
GTMS: 302 -- Steel - Stringer/Multi-Beam or Girder
POSTINGS: See Gen Rec Page 1 for Postings at time of inspection.
Further Investigation Needed: No
State Highway Number: CTYST Milepoint: 0.25 AADT/Yr: 20144 / 2003
Orientation: 1 - North Political Unit: 2055 - City of SYRACUSE Year Built: 1968
Total Spans: 4 Ramp Bridge Attached To Span: NA BIN: NA
General Recommendation: 6 Computed Condition Rating: 5.219

Abutment Ratings:	Beg Abut	End Abut
Joint with Deck	5	5
Bearings, Bolts, Pads	5	5
Seats and Pedestals	6	6
Backwall	5	5
Stem (Breastwall)	8	8
Erosion or Scour	5	5
Footings	9	9
Piles	8	8
Recommendation	5	5

Wingwall Ratings:	Beg Abut	End Abut
Walls	6	6
Footings	9	9
Erosion or Scour	6	6
Piles	8	8

Channel Ratings:	Channel
Stream Alignment	8
Erosion and Scour	8
Waterway Opening	8
Bank Protection	8

Approach Ratings:	Approaches
Drainage	2
Embankment	6
Settlement	5
Erosion	6
Pavement	4
Guide Railing	6

Number of Flags Issued:

RED: 0 Yellow: 0 Safety: 0

Vulnerability Reviews Recommended: 1=Yes, 2=No, 3=NA, X=NotActive

Hydraulic: 3	Overload: X	Steel: 2
Collision: 2	Concrete: X	Seismic: X

Inspector's Signature: CheckValue: 1,758,385,024 Date: 9/22/2011

Bruce Opalka,PE () (Inspector ID:3000038)

Signed copy of this inspection report is available in the appropriate NYSDOT Regional Office

Reviewed By: Date: 11/10/2011

James R. Manning,PE () (QC ID:3000023)

Signed copy of this inspection report is available in the appropriate NYSDOT Regional Office

Inspection Date: 9/22/2011 RC: 33 BIN: 1051160

Span Ratings

Carried: S. MIDLER AVENUE Crossed: 690I 690I33012050 CheckValue: 1,758,385,024

Deck Element Ratings:	001	002	003	004
Wearing Surface	6	6	6	6
Curbs	6	6	6	6
Sidewalks, Fascias	6	6	6	6
Railings, Parapets	6	6	6	6
Scuppers	8	8	8	8
Gratings	8	8	8	8
Median	8	8	8	8
Mono Deck Surface	6	6	6	6

Superstructure Ratings:	001	002	003	004
Structural Deck	5	5	5	5
Primary Members	5	5	5	5
Secondary Members	5	6	6	6
Paint	4	4	4	4
Joints	4	5	5	8
Recommendation	5	5	5	5

Pier Ratings:	001	002	003	004
Bearings, Bolts, Pads	5	5	5	8
Pedestals	6	6	6	8
Top of Cap or Beam	6	6	6	8
Stem Solid Pier	8	8	8	8
Cap Beam	6	6	6	8
Pier Columns	5	6	6	8
Footings	9	9	9	8
Erosion or Scour	6	6	6	8
Piles	8	8	8	8
Recommendation	5	6	6	8

Utility Ratings:	001	002	003	004
Lighting	5	6	6	5
Sign Structure	8	8	8	8
Utilities and Support	3	3	3	3

Field Notes:

Field Date	Arrival	Departure	Temp (C)	Temp (F)	Weather Conditions
7/7/2011	2:00:00 PM	3:00:00 PM	27	80	partly sunny
9/22/2011	8:00:00 AM	12:00:00 PM	21	70	Partly Cloudy

IN-DEPTH CONDITION DOCUMENTATION

IN DEPTH INSPECTION REPORT

BIN 1051160

- **In-Depth Condition:**

Visual Inspection: Under contract D259782 (11/04) concrete restoration of abutments and piers was performed along with an overlay, bearing restoration (see below), and guiderail replacement.

Cracks, spalls, and other field observations are shown on the plans. Below is a brief summary of conditions for each feature.

Superstructure

- **Deck –** See Bridge Deck Evaluation Report.
- **Steel –** See Structural Steel Inspection Summary.
- **Bearings –** Bearings are original. The expansion type slide over a bronze plate. Under Contract D259782 all bearings were restored and at the fixed bearing a new type #38 anchor bolt replaced the originals; at the expansion bearing, the type #38 bolt was added in between the two originals per each side of the bearing. Bearings show paint loss, some rusting, and pack rust debris build up. The 2013 Biennial inspection rated all the bearings at '5'.
- **Utilities-** There are two utility ducks in the left fascia bay across the length of the bridge, a 24" gas main and a 20" water main. There numerous kinks and excessive section loss on the water main so it might be an abandoned pipe. Pack rust has busted the weld between the bottom plate and angle section for the hanger brackets in at least three locations. These conditions are well documented in the Biennial inspection reports.

- **Substructure**
  - **South Abutment (Begin) –** Snow pack and water are draining through the gaps between the deck and cheek walls causing moisture

to be present constantly on the backwalls and pedestals in that area. Additionally, there is efflorescence build up on the backwall between the pedestals 1 & 2, around 5, 6 has a rust stain on front face, between 7 & 8 and behind 8. Minor hollowness in areas of buildup. Cheek and wing walls in good condition.

- **Pier #1 (south) –** Column 2 has a 5' L vertical crack on the far right side of the beginning face with delaminated concrete on either side of the crack to 3" W. The capbeam, on the end face, has a single 2" dia. by 2" D spall, solid concrete around the spall, between pedestals 1 & 2. There also is horizontal cracking with spalled and delaminated concrete on the bottom corner between columns 3 & 4 for 15' by 9" H. Pedestals 4 & 5 have some delamination on the end faces. Localized map cracking is present through-out pier elements.

- **Pier #2 (middle) -** Heavy leakage through the joint has led to a concentrated area of delamination and cracking on the beginning and bottom faces for 7' W by full height and width between pedestals 7 & 8. Additionally, the right face of column 4 has an 8" long map crack that has opened up which runs through the pedestal and capbeam and a 12" W by 36" L delaminated area at mid height. Localized map cracking is present through-out pier elements.

- **Pier #3 (north) -** Column 1 is in good condition. Column 2 has a 10" by 10" spall, solid concrete surrounding the spall, at the top on the begin face and a 2' by 2' delam at the top on the end face. Column 3 has a 4.5' H by "half the diameter" of the column on the right face 1.5' from the top. 1.5' below this delam on the end face there is another delam measuring 2.5' by 2.5'. Column 4 has heavy concentrated area of map cracking across upper 2/3's of column which extends into the capbeam. The capbeam on the begin face has horizontal hairline cracking near the bottom between columns 1 &1 and 2 & 3. There is

associated delamination for 2.5’ L by 1’ H with the crack between columns 2 & 3. Similar cracking with map cracking on end face between columns 1 & 2.

- **North Abutment (End) –** There is heavy and light seepage through the top of backwall/deck haunch cold joint leaving a buildup of efflorescence on the backwall and down across the pedestals. The heavier built up areas include from the left cheekwall through to pedestal 2, between pedestals 3 & 4, and from the right cheekwall over to pedestal 7. Water seeping below the utility pipes in the left fascia bay has left rust stains on abutment elements below. Cheek and wing walls in good condition.

STRUCTURAL STEEL INSPECTION SUMMARY

BIN 1051160

Special Emphasis Inspection Required
Non-Redundant/Fracture Critical Members – No
Pin and Hangers – No
Fatigue-Prone Welds – **Yes**
Non-Categorized Fatigue-Prone Details – No
Other (Specified in Text) – No

Special Emphasis Details: Partial length cover plate welds on all interior girders on spans 2, 3, & 4. Span 1 has no cover plates. Spans 2, 3, & 4 have full length cover plates on all fascia girders.

Overall Steel Condition: Girders are in satisfactory condition with the exception of numerous impacts to the beams. The left fascia girder of span 2 (I690EB) has numerous impacts, some of these impacts are deep gouges with rough sharp edges which has produced minor distortions in the bottom flange of the girder. A few less severe impacts occur in other girders. Secondary cross members are generally in good condition except for rust building up on some of those below the joints.

Paint: Paint is peeling and blistering on all lower flanges of girders in areas over traffic and below all joints; same condition for the fascia webs of left girders on spans 1 & 2. Spans 1 & 4 have some paint failure mostly on the bottom flanges and below the joints.

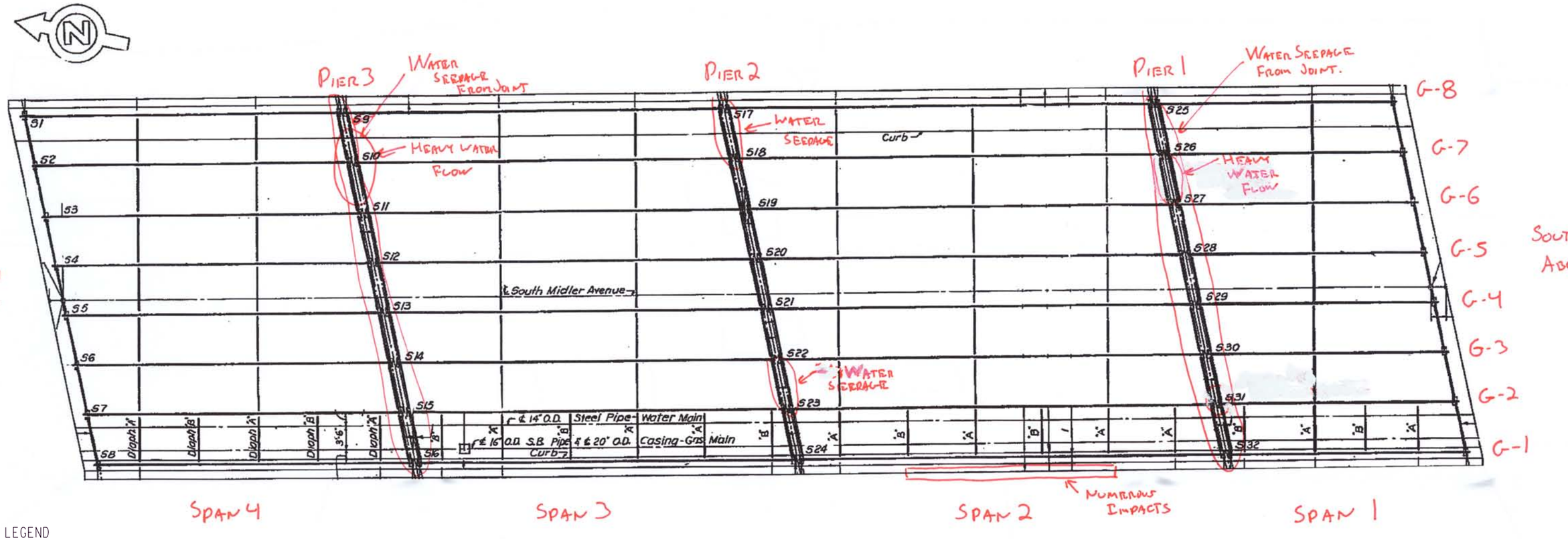

LEGEND

- C-X — CORE LOCATION
- XX — PHOTO LOCATION
- DELAMINATION
- SPALLING
- CRACK
- MAP CRACKING
- MOISTURE

100% INSPECTION OF COVER PLATES PERFORMED. NO DEFECTS OBSERVED.

FRAMING PLAN
Scale: 1/8" = 1'-0"

NOTES - NUMEROUS PATCHES ARE LOCATED THROUGHOUT THE DECK.

- MAP CRACKING IS EVIDENT IN MOST BAYS.
- SALT STAINING IS PRESENT IN THE MAP CRACKS AND IN THE PATCHES.

UNDER DECK
BIN 1051160
MIDLER AVE OVER I-690

FED ROAD REG. NO.	STATE	CONTRACT NO.	SHEET NO.	TOTAL SHEETS
1	N.Y.	D259782	34	61
P.I.N. 350631		B.I.N. 1051160		
ONONDAGA COUNTY				
SOUTH MIDLER AVENUE OVER I-690				
BRIDGE REHABILITATION PROJECT (ELEMENT SPECIFIC)				
CITY OF SYRACUSE				

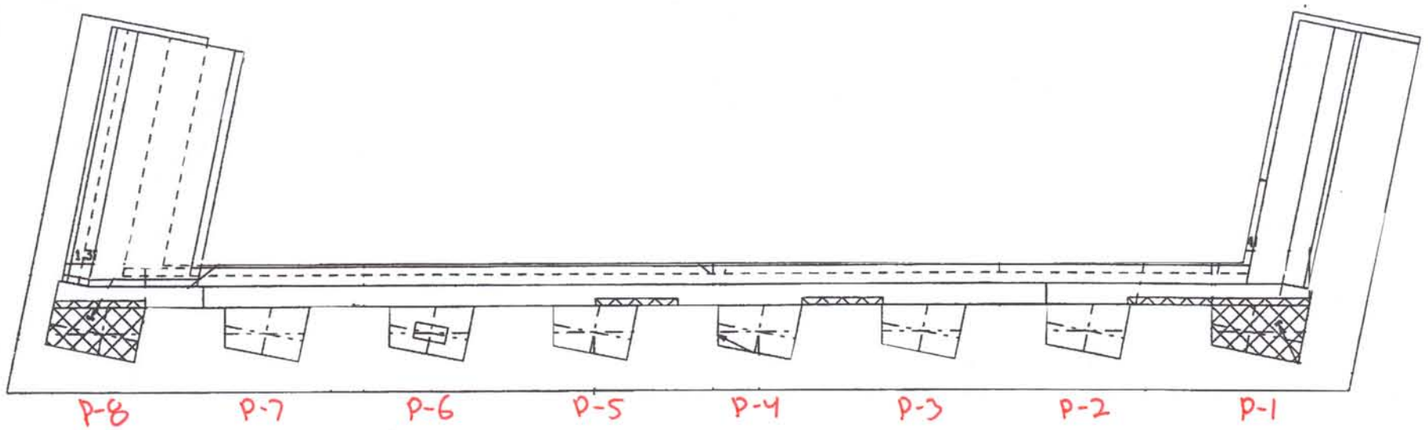

SOUTH ABUTMENT PLAN

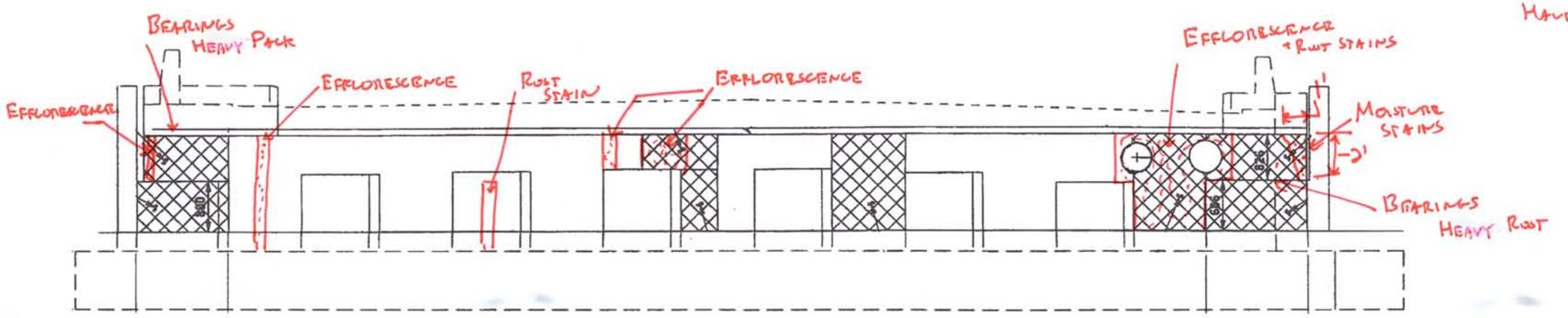

SOUTH ABUTMENT ELEVATION

NOTES-
- SOUTHEAST WINGWALL - CONCRETE APPEARS IN GOOD GENERAL CONDITION WITH ONLY MINOR ISOLATED AREAS OF DELAMINATED CONCRETE.
- PEDESTALS AND BACKWALLS - CONCRETE APPEARS IN GOOD GENERAL CONDITION WITH ONLY MINOR ISOLATED AREAS OF DELAMINATED CONCRETE
- SOUTHWEST WINGWALL - CONCRETE APPEARS IN GOOD GENERAL CONDITION WITH ONLY MINOR ISOLATED AREAS OF DELAMINATED CONCRETE.
- BEARINGS HAVE TYPICAL RUST. BEARING 1 AND 8 HAVE HEAVY RUST.

LEGEND

C-X	CORE LOCATION
XX	PHOTO LOCATION
	DELAMINATION
	SPALLING
	CRACK
	MAP CRACKING
	MOISTURE

1 0 1 2 3 4 m
SCALE

BIN 1051160
MIDLER AVE OVER I-690

AS BUILT REVISIONS

SIGNATURE DATE

SOUTH MIDLER AVENUE OVER I-690
SOUTH ABUTMENT REPAIR PLAN & ELEVATION

STATE OF NEW YORK
DEPARTMENT OF TRANSPORTATION

DOCUMENT NAME	REGION	DATE	DRAWING NO.
350631AB_AEA.DGN	03	REV. 12/04	ST-7

ESTIMATED BY ____ DRAFTED BY K.BAKER ____ CHECKED BY ____
DESIGNED BY ____ JOB MANAGER ____ DESIGN SUPERVISOR ____
USER = jpopson

1051160 S. MIDLER OVER I690

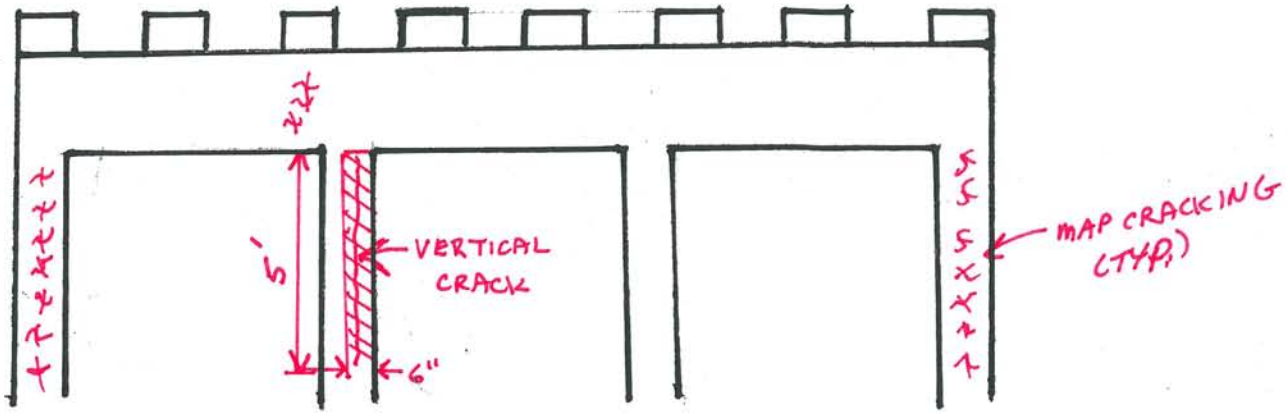

LEGEND

- C-X — CORE LOCATION
- XX — PHOTO LOCATION
- DELAMINATION
- SPALLING
- CRACK
- MAP CRACKING
- MOISTURE

BEGIN(S) FACE PIER #1

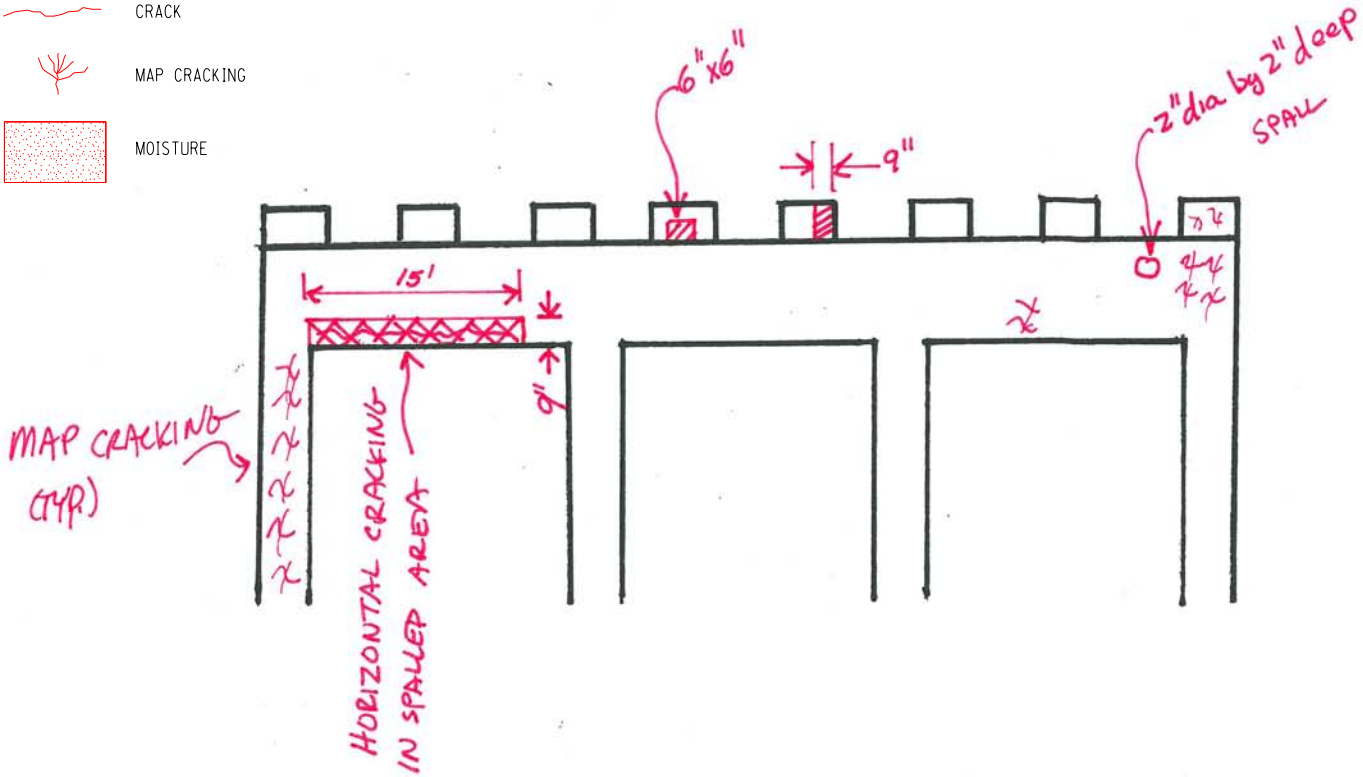

END FACE (N) PIER #1

1051168 S. MIDLER OVER I690

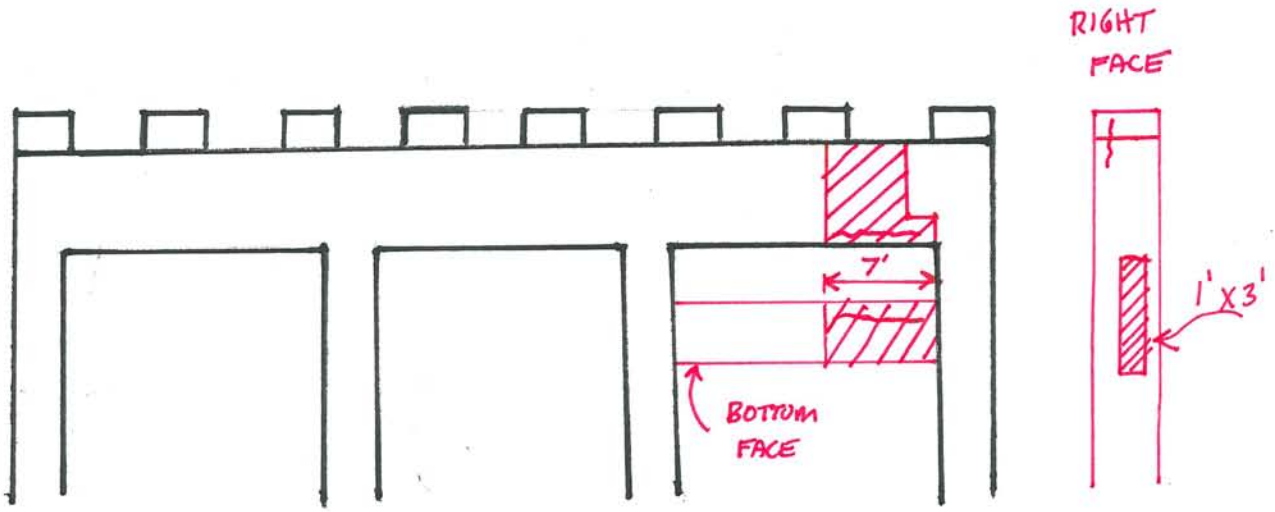

LEGEND

- C-X — CORE LOCATION
- XX — PHOTO LOCATION
- DELAMINATION
- SPALLING
- CRACK
- MAP CRACKING
- MOISTURE

BEGIN(S) FACE PIER #2

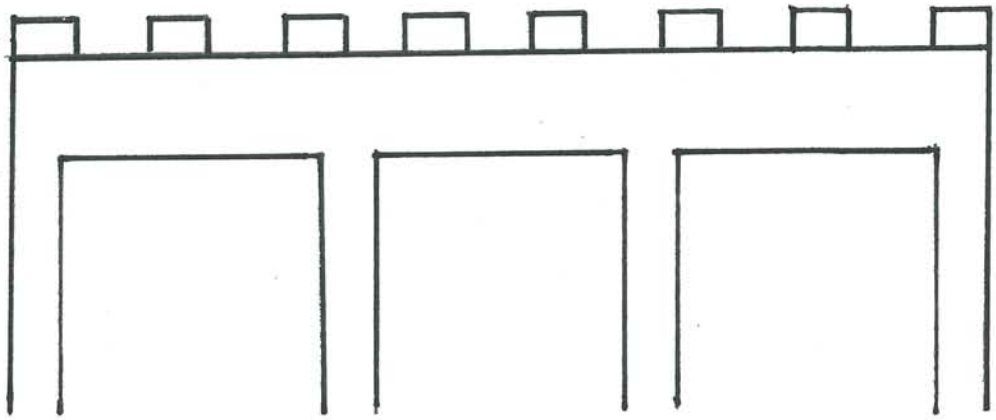

END FACE(N) PIER #2

105168 S. MIDLER OVER I 690

DPT 7/11/14

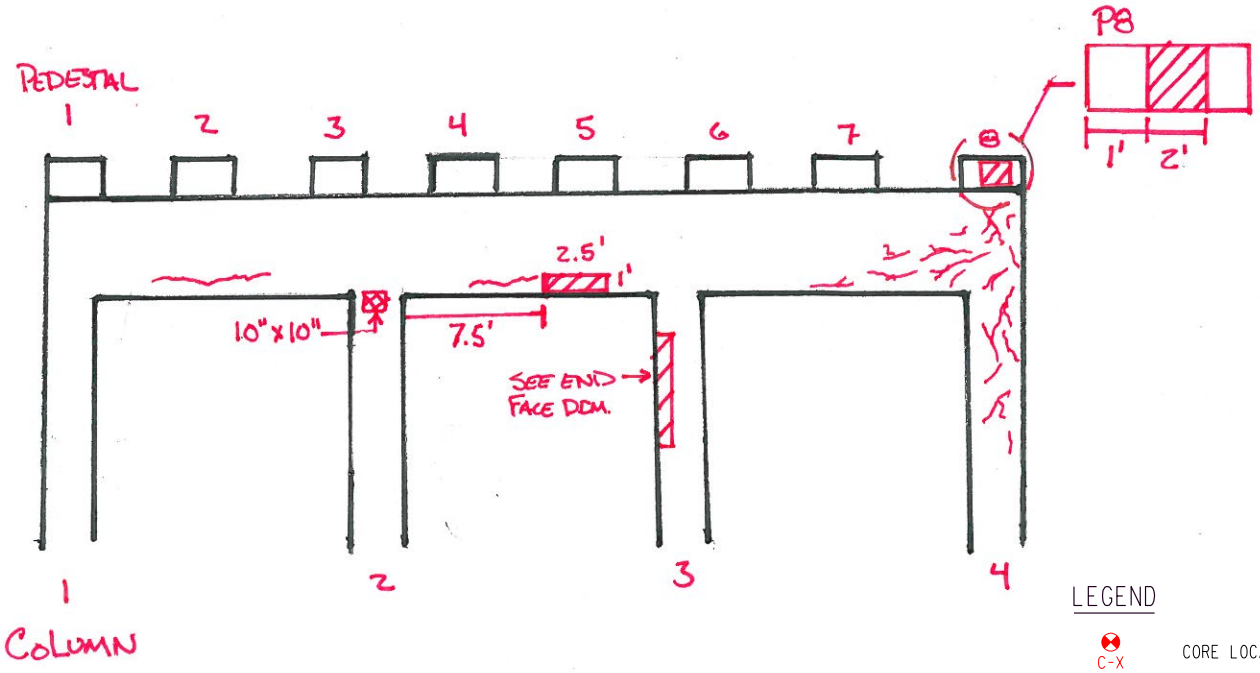

BEGIN(S) FACE PIER #3

LEGEND

- C-X — CORE LOCATION
- XX — PHOTO LOCATION
- DELAMINATION
- SPALLING
- CRACK
- MAP CRACKING
- MOISTURE

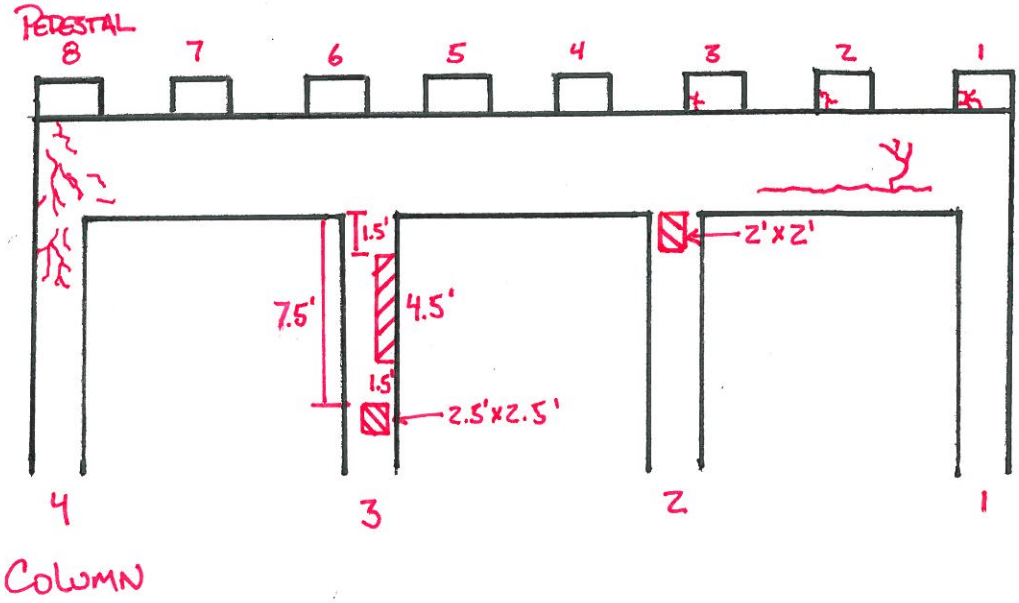

END FACE (N) PIER #3

FED ROAD REG. NO.	STATE	CONTRACT NO.	SHEET NO.	TOTAL SHEETS
1	N.Y.	D259782	33	61
P.I.N. 350631		B.I.N. 1051160		
ONONDAGA COUNTY				
SOUTH MIDLER AVENUE OVER I-690				
BRIDGE REHABILITATION PROJECT (ELEMENT SPECIFIC)				
CITY OF SYRACUSE				

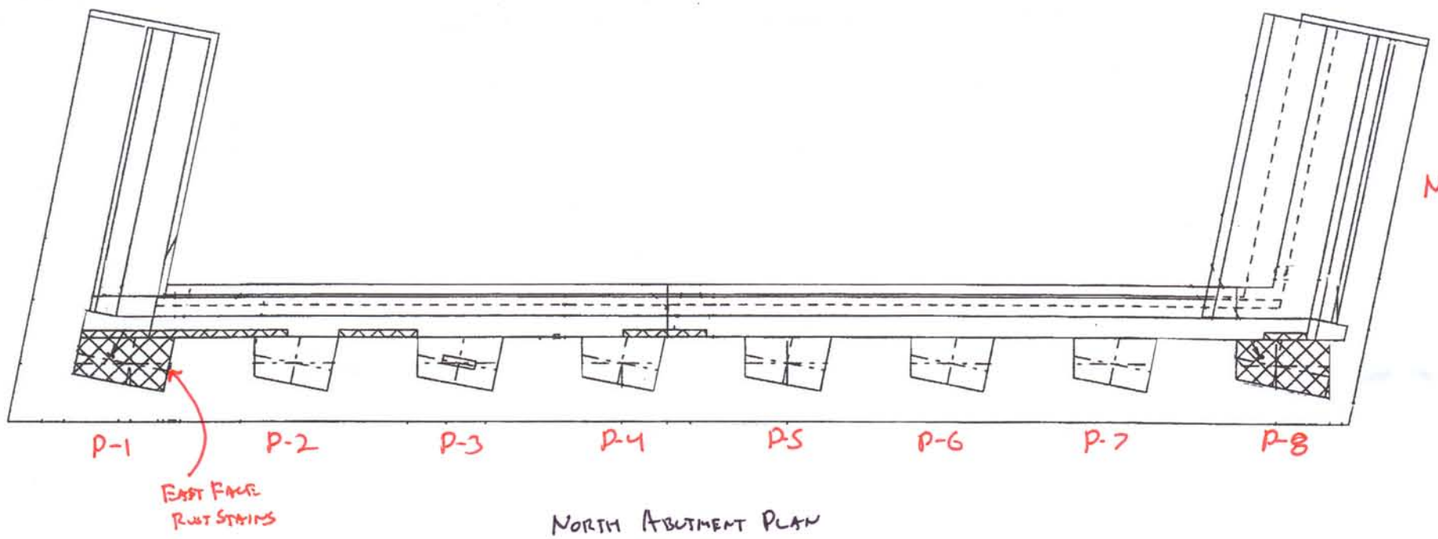

NORTH ABUTMENT PLAN

NOTES –
- NORTHEAST WINGWALL & NORTHWEST WINGWALL – CONCRETE APPEARS IN GOOD GENERAL CONDITION WITH ONLY MINOR ISOLATED AREAS OF DELAMINATED CONCRETE
- PIERSTEMS AND BACKWALL – CONCRETE APPEARS IN GOOD GENERAL CONDITION WITH ONLY MINOR ISOLATED AREAS OF DELAMINATED CONCRETE.
- BEARING MAKE TYPICAL RUST. BEARINGS 1, 2, AND 8 HAVE HEAVY RUST.

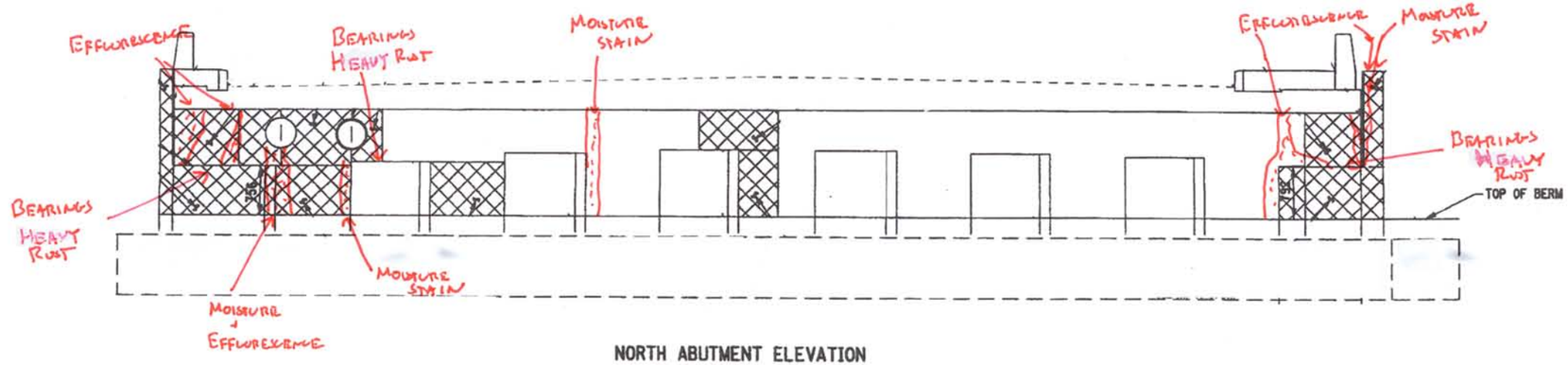

NORTH ABUTMENT ELEVATION

LEGEND

- C-X — CORE LOCATION
- (XX) — PHOTO LOCATION
- DELAMINATION
- SPALLING
- CRACK
- MAP CRACKING
- MOISTURE

BIN 1051160
MIDLER AVE OVER I-690

1 0 1 2 3 4 m
SCALE

AS BUILT REVISIONS

SIGNATURE DATE

SOUTH MIDLER AVENUE OVER I-690
NORTH ABUTMENT REPAIR PLAN & ELEVATION

STATE OF NEW YORK
DEPARTMENT OF TRANSPORTATION

DOCUMENT NAME	REGION	DATE	DRAWING NO.
350631AB_ABA.DGN	03	REV. 12/04	ST-6

DRAFTED BY K.BAKER
CHECKED BY
ESTIMATED BY
DESIGNED BY
JOB MANAGER
DESIGN SUPERVISOR

FILE NAME = 350631-db_dba.dgn
DATE/TIME = 07-DEC-2004 11:32
USER = jpopson

IN-DEPTH PHOTO DOCUMENTATION

C&S Engineers, Inc.
499 Col. Eileen Collins Blvd.
Syracuse, New York 13212
Phone: (315) 455-2000
Fax: (315) 455-9667
www.cscos.com

Midler Ave over I-690 - BIN 1051160



DESCRIPTION: SOUTH ABUTMENT – GENERAL OVERVIEW – LOOKING SOUTHWEST

PHOTO 1



DESCRIPTION: SOUTH ABUTMENT – SOUTHEAST WINGWALL – CONCRETE IN GOOD CONDITION – MINOR ISOLATED DALAMINATED CONCRETE

PHOTO 2

C&S Engineers, Inc.
499 Col. Eileen Collins Blvd.
Syracuse, New York 13212
Phone: (315) 455-2000
Fax: (315) 455-9667
www.cscos.com

Midler Ave over I-690 - BIN 1051160



DESCRIPTION: SOUTH ABUTMENT – SOUTHWEST WINGWALL – CONCRETE IN GOOD CONDITION – MINOR ISOLATED DALAMINATED CONCRETE

PHOTO 3



DESCRIPTION: SOUTH ABUTMENT – BEARING AT PEDESTAL 1 – HEAVY RUST – TYPICAL AT EXTERIOR GIRDERS

PHOTO 4

C&S Engineers, Inc.
499 Col. Eileen Collins Blvd.
Syracuse, New York 13212
Phone: (315) 455-2000
Fax: (315) 455-9667
www.cscos.com

Midler Ave over I-690 - BIN 1051160



DESCRIPTION: SOUTH ABUTMENT – PIPE PENETRATION AT BACKWALL BETWEEN PEDESTALS 1 AND 2 – EFFLORESCENCE AND RUST STAINING

PHOTO 5



DESCRIPTION: SOUTH ABUTMENT – BACKWALL AT PEDESTAL 5 – CRACK AND HEAVY EFFLORESCENCE

PHOTO 6

C&S Engineers, Inc.
499 Col. Eileen Collins Blvd.
Syracuse, New York 13212
Phone: (315) 455-2000
Fax: (315) 455-9667
www.cscos.com

Midler Ave over I-690 - BIN 1051160



DESCRIPTION: SOUTH ABUTMENT – BEARING AT PEDESTAL 5 – LIGHT TO MODERATE RUST – TYPICAL AT INTERIOR GIRDERS

PHOTO 7



DESCRIPTION: SOUTH ABUTMENT – PEDESTAL 6 – RUST STAIN AT CRACK

PHOTO 8

C&S Engineers, Inc.
499 Col. Eileen Collins Blvd.
Syracuse, New York 13212
Phone: (315) 455-2000
Fax: (315) 455-9667
www.cscos.com

Midler Ave over I-690 - BIN 1051160



DESCRIPTION: PIER 1 – SOUTH FACE – LOOKING NORTHWEST

PHOTO 9



DESCRIPTION: PIER 1 – NORTH FACE – LOOKING SOUTHEAST

PHOTO 10

C&S Engineers, Inc.
499 Col. Eileen Collins Blvd.
Syracuse, New York 13212
Phone: (315) 455-2000
Fax: (315) 455-9667
www.cscos.com

Midler Ave over I-690 - BIN 1051160



DESCRIPTION: PIER 1 – NORTH FACE – DELAMINATED CONCRETE AT PEDESTAL 4

PHOTO 11



DESCRIPTION: PIER 1 – NORTH FACE – DELAMINATED CONCRETE AT PEDESTAL 5

PHOTO 12

C&S Engineers, Inc.
499 Col. Eileen Collins Blvd.
Syracuse, New York 13212
Phone: (315) 455-2000
Fax: (315) 455-9667
www.cscos.com

Midler Ave over I-690 - BIN 1051160



DESCRIPTION: PIER 1, COLUMN 2 – SOUTH FACE – CRACK

PHOTO 13



DESCRIPTION: PIER 1 –NORTH FACE – CRACKED AND SPALLED AT BOTTOM OF BEAM BETWEEN COLUMNS 3 AND 4

PHOTO 14

C&S Engineers, Inc.
499 Col. Eileen Collins Blvd.
Syracuse, New York 13212
Phone: (315) 455-2000
Fax: (315) 455-9667
www.cscos.com

Midler Ave over I-690 - BIN 1051160



DESCRIPTION: PIER 1 – BEARINGS AT PEDESTAL 6 – MODERATE RUST – TYPICAL AT INTERIOR BEARINGS

PHOTO 15



DESCRIPTION: PIER 1 – BEARINGS AT PEDESTAL 8 – TYPICAL OF EXTERIOR BEARINGS

PHOTO 16

C&S Engineers, Inc.
499 Col. Eileen Collins Blvd.
Syracuse, New York 13212
Phone: (315) 455-2000
Fax: (315) 455-9667
www.cscos.com

Midler Ave over I-690 - BIN 1051160



DESCRIPTION: EXPANSION JOINT OVER PIER 1 AT PEDESTAL 8 – SEVERE DAMAGE TO JOINT – SIGNIFICANT WATER INFILTRATION – TYPICAL THROUGHOUT **PHOTO 17**



DESCRIPTION: GIRDER 1 – SPAN 2 – BETWEEN PIER 1 AND 2 – DAMAGE FROM NUMEROUS IMPACTS **PHOTO 18**

C&S Engineers, Inc.
499 Col. Eileen Collins Blvd.
Syracuse, New York 13212
Phone: (315) 455-2000
Fax: (315) 455-9667
www.cscos.com

Midler Ave over I-690 - BIN 1051160



DESCRIPTION: PIER 2 – LOOKING SOUTHWEST

PHOTO 19



DESCRIPTION: PIER 2 – SOUTH FACE – CAP BEAM BETWEEN COLUMNS 3 AND 4 – MAP CRACKING AND DELAMINATED CONCRETE

PHOTO 20

C&S Engineers, Inc.
499 Col. Eileen Collins Blvd.
Syracuse, New York 13212
Phone: (315) 455-2000
Fax: (315) 455-9667
www.cscos.com

Midler Ave over I-690 - BIN 1051160



DESCRIPTION: PIER 2 PEDESTAL 5 – LIGHT TO MODERATE RUST – TYPICAL OF INTEROR GIRDERS

PHOTO 21



DESCRIPTION: PIER 2 – PEDESTAL 7 – HEAVY RUST – MAJOR WATER INFILTRATION – OPEN JOINT

PHOTO 22

C&S Engineers, Inc.
499 Col. Eileen Collins Blvd.
Syracuse, New York 13212
Phone: (315) 455-2000
Fax: (315) 455-9667
www.cscos.com

Midler Ave over I-690 - BIN 1051160



DESCRIPTION: PIER 3 – LOOKING SOUTHWEST

PHOTO 23



DESCRIPTION: PIER 3 – BOTTOM OF SLAB AT GIRDER 1 – MAJOR CRACKING, DELAMINATION, AND SPALLING AT JOINT

PHOTO 24

C&S Engineers, Inc.
499 Col. Eileen Collins Blvd.
Syracuse, New York 13212
Phone: (315) 455-2000
Fax: (315) 455-9667
www.cscos.com

Midler Ave over I-690 - BIN 1051160



DESCRIPTION: PIER 3 – COLUMN 2 – LOOKING SOUTHWEST – DELAMINATED CONCRETE

PHOTO 25



DESCRIPTION: PIER 3 – COLUMN 3 – LOOKING EAST – DELAMINATED CONCRETE

PHOTO 26

C&S Engineers, Inc.
499 Col. Eileen Collins Blvd.
Syracuse, New York 13212
Phone: (315) 455-2000
Fax: (315) 455-9667
www.cscos.com

Midler Ave over I-690 - BIN 1051160



DESCRIPTION: NORTH ABUTMENT – NORTHWEST WINGWALL – CONCRETE IN GOOD CONDITION – MINOR ISOLATED DALAMINATED CONCRETE

PHOTO 27



DESCRIPTION: NORTH ABUTMENT – GENERAL OVERVIEW – LOOKING NORTHWEST

PHOTO 28

C&S Engineers, Inc.
499 Col. Eileen Collins Blvd.
Syracuse, New York 13212
Phone: (315) 455-2000
Fax: (315) 455-9667
www.cscos.com

Midler Ave over I-690 - BIN 1051160



DESCRIPTION: NORTH ABUTMENT – NORTHEAST WINGWALL – CONCRETE IN GOOD CONDITION – MINOR ISOLATED DALAMINATED CONCRETE

PHOTO 29



DESCRIPTION: NORTH ABUTMENT – BEARING AT GIRDER G-1 – MODERATE RUST – TYPICAL AT EXTERIOR GIRDERS

PHOTO 30

C&S Engineers, Inc.
499 Col. Eileen Collins Blvd.
Syracuse, New York 13212
Phone: (315) 455-2000
Fax: (315) 455-9667
www.cscos.com

Midler Ave over I-690 - BIN 1051160



DESCRIPTION: NORTH ABUTMENT – BEARING AT GIRDER G-4 – LIGHT TO MODERATE RUST – TYPICAL AT INTERIOR GIRDERS

PHOTO 31



DESCRIPTION: NORTH ABUTMENT – BACKWALL BETWEEN PEDESTALS 1 AND 2 – RUST STAINING AND EFFLORESCENCE AT CRACKS

PHOTO 32

C&S Engineers, Inc.
499 Col. Eileen Collins Blvd.
Syracuse, New York 13212
Phone: (315) 455-2000
Fax: (315) 455-9667
www.cscos.com

Midler Ave over I-690 - BIN 1051160



DESCRIPTION: NORTH ABUTMENT – BACKWALL BETWEEN PEDESTALS 2 AND 3 – SLIGHT EFFLORESCENCE AT CRACKS – TYPICAL AT BACKWALL

PHOTO 33



DESCRIPTION: NORTH ABUTMENT – BACKWALL AT PEDESTAL 8 – WATER INFILTRATION AND EFFLORESCENCE AT JOINT

PHOTO 34

C&S Engineers, Inc.
499 Col. Eileen Collins Blvd.
Syracuse, New York 13212
Phone: (315) 455-2000
Fax: (315) 455-9667
www.cscos.com

Midler Ave over I-690 - BIN 1051160



DESCRIPTION: SOUTH ABUTMENT – BACKWALL NEXT TO LEFT CHEEKWALL– EFFLORESCENCE & MOISTURE BUILDUP

PHOTO 35



DESCRIPTION: SOUTH ABUTMENT – BACKWALL AT PEDESTALS 7- 8 – WATER INFILTRATION AND EFFLORESCENCE AT JOINT

PHOTO 36

C&S Engineers, Inc.
499 Col. Eileen Collins Blvd.
Syracuse, New York 13212
Phone: (315) 455-2000
Fax: (315) 455-9667
www.cscos.com

Midler Ave over I-690 - BIN 1051160



DESCRIPTION: SOUTH ABUTMENT – BACKWALL NEXT RIGHT CHEEKWALL – EFFLORESCENCE BUILDUP –

PHOTO 37



DESCRIPTION: BRIDGE RIGHT-LOOKING EAST TO WEST

PHOTO 38

PHOTO LOCATION PLAN

1051160 S. MIDLER OVER I690

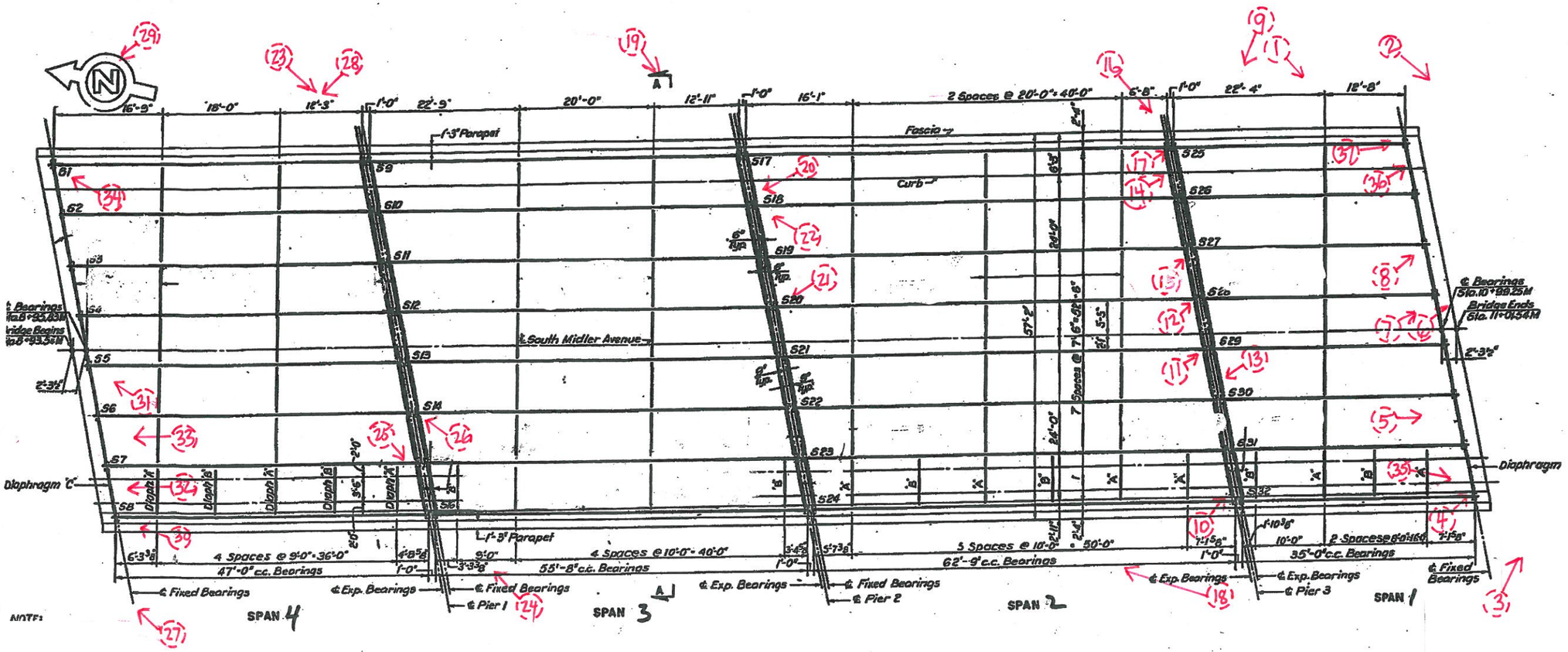

○→ INDICATES PHOTO WAS TAKEN BELOW BRIDGE DECK

○→ INDICATES PHOTO WAS TAKEN ABOVE BRIDGE DECK

ASBESTOS DOCUMENTATION

Asbestos Sampling Survey

Location:

Ten Bridges in
Onondaga County, New York

Prepared for:

New York State
Department of Transportation

PIN 3803.83.101

LaBella Project No. 93186

February, 1997

LaBella Associates, P.C.
300 State Street
Rochester, New York 14614-1098

Table of Contents

		Page
I.	Project Summary	1
II.	Site Description	2
III.	Inspection Procedures	3
IV.	Results	3
Certification		7

Figures and Table

I. Project Summary

In accordance with conditions of Term Agreement D006924, LaBella Associates, P.C. conducted an asbestos sampling survey of the following bridges:

BIN 1-06468-9 Thompson Road over Interstate Route 690
BIN 1-05116-0 South Midler Avenue over Interstate Route 690
BIN 1-05111-9 Interstate Route 690 over Lodi Street
BIN 1-05084-0 On Ramp to Interstate Route 690 East Bound over Onondaga Creek
BIN 1-05082-1 Interstate Route 690 West Bound over Onondaga Creek
BIN 1-05082-2 Interstate Route 690 East Bound over Onondaga Creek
BIN 1-05100-0 Interstate Route 690 East Bound from Clinton St. to McBride St.
BIN 1-03167-1 Interstate Route 81 South Bound over Route 11
BIN 1-03160-0 Route 298 over Interstate Route 81
BIN 1-09551-0 Interstate Route 690 West Bound over Interstate Route 81

Based on laboratory analyses of bulk samples collected, the following materials were determined to contain asbestos:

BIN 1-06468-9 Thompson Road over Interstate Route 690

Type of Material	Estimated Amount
Sheet Packing	18.8 Square Meters

BIN 1-05116-0 South Midler Avenue over Interstate Route 690

Type of Material	Estimated Amount
Sheet Packing	11 Square Meters
Tar Paper Pipe Wrap	63.4 Linear Meters

BIN 1-05111-9 Interstate Route 690 over Lodi Street

Type of Material	Estimated Amount
Sheet Packing	30.8 Square Meters
Caulking Compound	8 Linear Meters

III. Inspection Procedures

The following procedures were used to obtain the data for this Report:

A. A review of record drawings supplied by Region 3 personnel and a visual inspection of the subject structures were conducted to identify potential visible/accessible sources of asbestos-containing materials. Observations and notes were made to provide a description of the structures, and an estimate of the approximate amount, length, or area of ACM present.

B. Physical or operational constraints which might affect the removal of the ACM were identified and reported.

C. Bulk samples of suspected ACM were collected during the site inspection of the subject structures. Samples were taken from each homogeneous area that may contain ACM.

D. Samples were submitted for analysis. Preliminary PLM analyses of NOB materials were performed by LaBella Laboratories, a NYSDOH approved laboratory, to determine the presence and percentage of asbestos in each sample. TEM analyses of NOB materials, if necessary, were performed by EMSL Analytical, Inc. or New York Testing Laboratories, Inc.

E. Lab results were used to determine the approximate location, type, and amount of the verified ACM.

F. Drawings of the structures at the Site were created, in order to show sample locations and the approximate locations and amounts of confirmed ACM observed in accessible locations.

Only accessible areas were inspected. Inaccessible areas, such as areas within the bridges or the approaches to the bridges were not included in this inspection. No investigation was conducted by LaBella Associates to determine the presence of underground utilities on or in the immediate vicinity of the Site. Actual sample locations are shown in FIGURES 2-8. Results of bulk sample analyses are tabulated in TABLE 1.

IV. Results

Based on the analytical results, the following materials were determined to be asbestos-containing:

A. **BIN 1-06468-9 Thompson Road over Interstate Route 690**

Sheet Packing

Asbestos-containing sheet packing is located between the tops of the abutments and the deck slabs at both ends of the bridge. Most of this material is presently covered by the bridge deck, although the edges of this sheet packing are exposed and visible at various locations on both ends of the bridge.

It is estimated that the total amount of this asbestos-containing sheet packing material on the bridge is approximately 18.8 square meters. This estimate is based on field measurements taken at the time of the site visit.

The approximate locations of this asbestos-containing sheet packing are shown in FIGURE 2.

B. **BIN 1-05116-0 South Midler Avenue over Interstate Route 690**

Sheet Packing

Asbestos-containing sheet packing is located between the tops of the abutments and the deck slabs at both ends of the bridge. Most of this material is presently covered by the bridge deck, although the edges of this sheet packing are exposed and visible at various locations on both ends of the bridge.

It is estimated that the total amount of this asbestos-containing sheet packing material on the bridge is approximately 11 square meters. This estimate is based on field measurements taken at the time of the site visit.

The approximate locations of this asbestos-containing sheet packing are shown in FIGURE 3.

Tar Paper PipeWrap

Asbestos-containing tar paper pipe wrap is located on the water line suspended below the west side of the bridge.

It is estimated that the total amount of this asbestos-containing tar paper pipe wrap on the bridge is approximately 63.4 linear meters (full length of the bridge). This estimate is based on field measurements taken at the time of the site visit. The approximate location of this asbestos-containing tar paper pipe wrap is shown in FIGURE 3.

C. **BIN 1-05111-9 Interstate Route 690 over Lodi Street**

Sheet Packing

Asbestos-containing sheet packing is located between the tops of the abutments and the deck slabs at both ends of the bridge. Most of this material is presently covered by the bridge deck, although the edges of this sheet packing are exposed and visible at various locations on both ends of the bridge.

It is estimated that the total amount of this asbestos-containing sheet packing material on the bridge is approximately 30.8 square meters. This estimate is based on field measurements taken at the time of the site visit.

The approximate locations of this asbestos-containing sheet packing are shown in FIGURE 4.

Caulking Compound

Asbestos-containing caulking compound is located in scattered areas around the perimeter of some of the guide rail base plates on both the north and south sides of the bridge. Observations made at the time of the site visit revealed that much of this material has apparently been eroded away over the years, leaving only an estimated 20% of the original caulking remaining in place around the base plates.

Based on 20% of the original caulk remaining, it is estimated that the total amount of this asbestos-containing caulking compound on the bridge is approximately 8 linear meters.

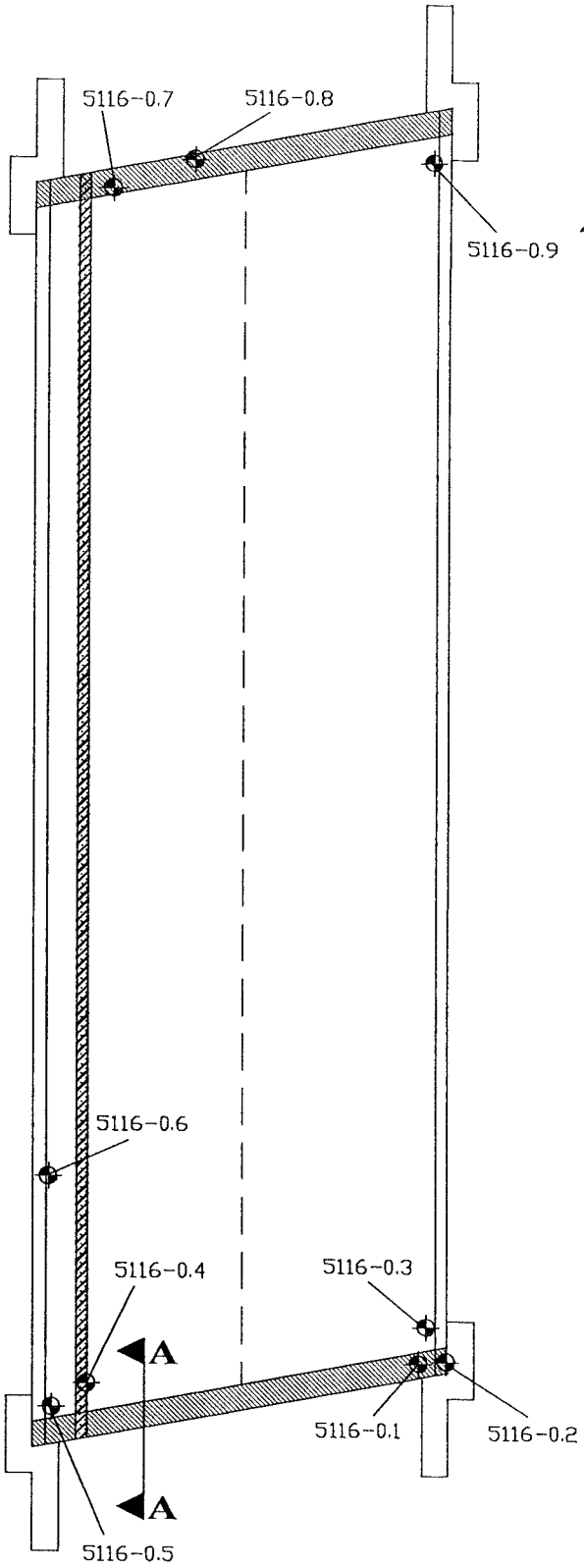

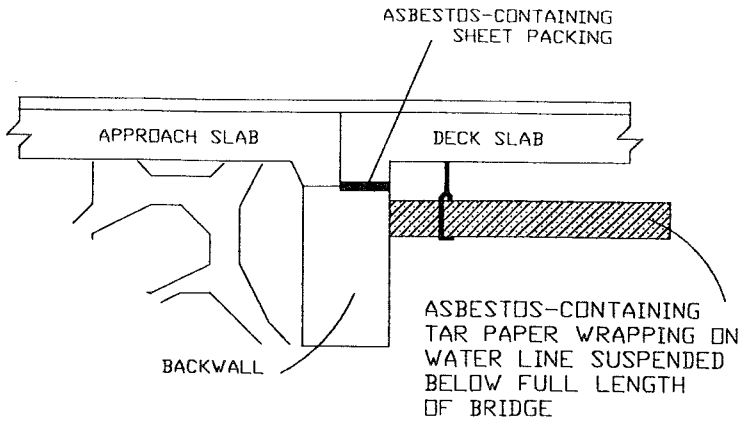

SECTION A-A

LEGEND

- 5116-0.1 SAMPLE LOCATION
- ASBESTOS-CONTAINING TAR PAPER WRAPPING ON WATER LINE SUSPENDED FROM BRIDGE
- ASBESTOS-CONTAINING SHEET PACKING

NORTH

PROJECT TITLE: ASBESTOS SAMPLING SURVEY TEN BRIDGES, ONONDAGA CO., NEW YORK	PROJECT NO. 93186
	PIN 3803.83.101
FIGURE TITLE: FIGURE 3 SOUTH MIDLER AVE. OVER I-690 BIN 1-05116-0 SAMPLE LOCATIONS AND CONFIRMED ACM	NOT TO SCALE
	DATE: FEBRUARY, 1997

Table 1 (continued)

Asbestos Sampling Survey
Ten Bridges in
Onondaga County, New York
LaBella Project # 93186
PIN 3803.83.101

BIN 1-05116-0 South Midler Avenue over I-690

Sample #	Sample Location	Type of Material	Results % Asbestos	Amount of Material	Specification Item No.
5116-0.1	**South End of Bridge Between Deck and Abutment**	**Sheet Packing**	**32 % Chrysotile**	**11 Square Meters**	**15202.0611M**
5116-0.2	South End of Bridge Between Deck and Cheek wall	Premolded Bituminous Joint Filler	None Detected	N/A	N/A
5116-0.3	South End of Bridge on Abutment	Masonry Coating	None Detected	N/A	N/A
5116-0.4	**South End of Bridge on Water Pipe**	**Tar Paper Wrapping**	**22 % Chrysotile**	**63.4 Linear Meters**	**15202.0611M**
5116-0.5	South End of Bridge on Inside of West I-Beam	Green Paint	None Detected	N/A	N/A
5116-0.6	West Side of Bridge at Construction Joint	Premolded Bituminous Joint Filler	None Detected	N/A	N/A
5116-0.7	North End of Bridge on Inside I-Beam	Green Paint	None Detected	N/A	N/A
5116-0.8	North End of Bridge Under Bearing	Bearing Pad	None Detected	N/A	N/A
5116-0.9	North End of Bridge on Inside of East I-Beam	Green Paint	None Detected	N/A	N/A

BIN 1051160
SOUTH MIDLER AVENUE
OVER ROUTE I-690

BRIDGE PAINT ASBESTOS TESTING
BULK SAMPLE SUMMARY TABLE

NO OTHER SUSPECT MATERIALS TESTED

SAMPLE #	SAMPLE DATE	HOMOGENEOUS AREA	SAMPLE LOCATION	RESULTS- % ASBESTOS *	ANALYSIS METHOD
1051160-1	7/19/02	Green Paint	South End of Bridge on Outside of West Fascia Girder	None Detected	TEM **
1051160-2	7/19/02	Green Paint	South End of Bridge on West Diaphragm	None Detected	TEM **
1051160-3	7/19/02	Green Paint	North End of Bridge on Inside of East Fascia Girder	None Detected	TEM **

* PLM = Polarized Light Microscopy
** TEM = Transmission Electron Microscopy

LaBella Project No. 201001
PIN 3804.79.101
1051160

BIN 1051160
SOUTH MIDLER AVENUE
OVER ROUTE I-690

BRIDGE PAINT ASBESTOS TESTING
BULK SAMPLE SUMMARY TABLE

NO OTHER SUSPECT MATERIALS TESTED

SAMPLE #	SAMPLE DATE	HOMOGENEOUS AREA	SAMPLE LOCATION	RESULTS- % ASBESTOS *	ANALYSIS METHOD
1051160-1	7/19/02	Green Paint	South End of Bridge on Outside of West Fascia Girder	None Detected	TEM **
1051160-2	7/19/02	Green Paint	South End of Bridge on West Diaphragm	None Detected	TEM **
1051160-3	7/19/02	Green Paint	North End of Bridge on Inside of East Fascia Girder	None Detected	TEM **

* PLM = Polarized Light Microscopy
** TEM = Transmission Electron Microscopy

LaBella Project No. 201001
PIN 3804.79.101
1051160

ASBESTOS DOCUMENTATION FROM WATTS ARCHITECTURE & ENGINEERING, INC.

(WILL REPLACE BIN FOLDER ASBESTOS REPORT UPON COMPLETION)

NEW YORK STATE
DEPARTMENT OF TRANSPORTATION
D031085 P.I.N 3501.60

LEVEL 1 LOAD RATING
B.I.N. 1051160
Midler Avenue over I-690

LOAD RATING SUMMARY TABLE (LOAD FACTOR)					
CONTROLLING MEMBER	**CONTROLLING PARAMETER**	**LIVE LOAD**	**LIVE LOAD TYPE**	**INVENTORY RATING**	**OPERATING RATING**
SPAN 4 INTERIOR GIRDERS (G3 TO G7)	SERVICE	HS20-44	Axle Load	HS 31.8 (57.3 TONS)	HS 53.2 (95.7 TONS)

DOES NOT INCLUDE FUTURE WEARING COURSE

ANALYSIS METHOD:LOAD FACTOR

RECOMMENDED POSTING AS-IS CONDITION: _____ Tons __X__ None

CALCULATED BY:



DATE: 06/10/14

QUALITY ASSURANCE BY:



DATE: 06/10/14

C&S COMPANIES®

499 Col. Eileen Collins Blvd.
Syracuse, NY 13212
phone 315-455-2000
fax 315-455-9667
www.cscos.com

ENGINEERS
DESIGN BUILD
TECHNICAL RESOURCES
OPERATIONS

C&S Companies

C&S Engineers, Inc.
Syracuse Hancock International Airport
Syracuse, NY 13212
phone 315-455-2000
fax 315-455-9667
www.cscos.com

TECHNICAL MEMORANDUM

TO: FILE (190.514.001)

FROM: JESSICA S. BAUER, P.E.
NYSPE 084915

DATE: MARCH 18, 2014

C&S PROJECT NO.: 190.514.001

RE: SEISMIC ASSESSMENT SUMMARY
NEW YORK STATE DEPARTMENT OF TRANSPORTATION
D031085; PIN 3501.60; I-81

BIN: 1051160 Seismic Assessment

This memorandum summarizes the seismic assessment conducted for BIN 1051160 as part of the Interstate 81 Project in Syracuse, NY. The purpose of the assessment is to determine if seismic retrofits are warranted at the superstructure to substructure connection, and if further seismic evaluation of the structure is required. This memorandum will give the assessment results, retrofits required and recommendations for further seismic evaluation of the structure.

ASSESSMENT PROCEDURE

The seismic assessment was performed in accordance with the FHWA Seismic Retrofitting Manual for Highway Structures: Part 1 - Bridges, January 2006. As per the referenced manual, seismic assessment was performed for both lower level and upper level earthquake ground motion. The lower level earthquake ground motion has a reasonable likelihood of occurrence within the life of the bridge (50% probability of exceedance within a 75 year bridge life). The upper level earthquake ground motion has a finite likelihood of occurrence within the life of the bridge (7% probability of exceedance within a 75 year bridge life).

Values for the spectral acceleration for the Syracuse area used in the assessment are as follows:

- Lower Level Earthquake Ground Motion for a Short Period (0.2 seconds): $S_S = 0.0251$
- Lower Level Earthquake Ground Motion for a Long Period (1.0 seconds): $S_1 = 0.0076$
- Upper Level Earthquake Ground Motion for a Short Period (0.2 seconds): $S_S = 0.139$
- Upper Level Earthquake Ground Motion for a Long Period (1.0 seconds): $S_1 = 0.047$

These values are considered constant and are the same for all seismic assessments of bridges in the Syracuse area.

The Site Class is based on the soil conditions at the bridge location. It was determined that this parameter has little effect on the results of the seismic assessment because the spectral

You created this PDF from an application that is not licensed to print to novaPDF printer (http://www.novapdf.com)

acceleration values for the Syracuse area are small. Based on this, a site class of D was used for all seismic assessments of bridges in the Syracuse area.

Bridge parameters used in the seismic assessment were retrieved from the record drawings and WinBolts data.

The seismic assessment takes into account the anticipated service life, importance, and the seismic exposure of the bridge to determine a seismic retrofit category (SRC). The SRC is then used to determine seismic evaluation methods and retrofit measures. There are four SRCs, A through D. Seismic retrofit category A is the lowest category; bridges in this category do not require retrofits or further seismic evaluation. Seismic retrofit category D is the highest category; bridges in this category requiring the most rigorous seismic evaluations and retrofits.

ASSESSMENT RESULTS

The SRC for the bridge is "**C**" for lower level earthquake ground motion and "**B**" for upper level earthquake ground motion.

RETROFITS REQUIRED

Bearing replacements and seat width improvements are not required at the abutments or piers. Additional retrofits may be required if further seismic evaluation is needed.

RECOMMENDATIONS FOR FURTHER SEISMIC EVALUATION

For the lower level earthquake ground motion, it is recommended that capacity/demand ratios for bridge components are calculated as per Section 5.4 of the referenced manual. For the upper level earthquake ground motion, it is recommended that the capacities of the bearings are checked as per Section 5.2 of the referenced manual.

Retrofit cost estimates will be provided after any further required seismic evaluations are completed.

You created this PDF from an application that is not licensed to print to novaPDF printer (http://www.novapdf.com)

ENGINEERS
DESIGN BUILD
TECHNICAL RESOURCES
OPERATIONS

C&S Companies

C&S Engineers, Inc.
Syracuse Hancock International Airport
Syracuse, NY 13212
phone 315-455-2000
fax 315-455-9667
www.cscos.com

TECHNICAL MEMORANDUM

TO: **FILE (190.514.001)**

FROM: **PAUL BYRNE , P.E.**
NYSPE 055298

DATE: **JUNE 12, 2014**

C&S PROJECT NO.: 190.514.001

RE: **NEW YORK STATE DEPARTMENT OF TRANSPORTATION**
D031085; PIN 3501.60; I-81 Opportunities, BIN 1051160 Fatigue Evaluation

---

This memorandum documents a fatigue evaluation conducted for the existing Interstate 81 Viaduct Project. Existing structures with AASHTO Category D, E, and E' fatigue-prone details require 100% hands-on inspection unless proven to be exempt. The purpose of the evaluation is to assess the remaining life of fatigue-prone components.

EVALUATION PROCEDURES

The fatigue evaluation was performed in accordance with the AASHTO Guide Specification for Fatigue Evaluations of Existing Steel Bridges, 1990. Fatigue-prone welds identified in the biennial inspection reports were located on record drawings and confirmed visually in the field. Additional information concerning fatigue-prone welds located in BIN folders was also obtained and reviewed prior to inspection.

EVALUATION RESULTS

The results of the fatigue evaluation of the existing bridge are shown below. The remaining safe fatigue life of the fatigue components has **not** been **exhausted**.

Fatigue Detail Location	Remaining Safe Fatigue Life (Years)	Remaining Mean Fatigue Life (Years)
Span 2, Interior Girders S18 to S22, End of Bottom Flange Cover Plate	58.34	427.96
Span 2, Interior Girder S23, End of Bottom Flange Cover Plate	82.13	545.04
Span 3, Interior Girders S10 to S14, End of Bottom Flange Cover Plate	39.04	333.02
Span 3, Interior Girder S15, End of Bottom Flange Cover Plate	49.99	386.90
Span 4, Interior Girders S2 to S6, End of Bottom Flange Cover Plate	137.88	819.38

Fatigue Detail Location	Remaining Safe Fatigue Life (Years)	Remaining Mean Fatigue Life (Years)
Span 4, Interior Girder S7, End of Bottom Flange Cover Plate	135.78	809.06

E. Recommendations:

The purpose of this deck evaluation is to document and determine existing conditions of the deck. It will be used as a tool for developing the scope of work and cost estimates for the development and comparison of alternatives for the overall project.

There were no delaminated concrete deck areas (0%) on this bridge. Due to the high chloride-ion content of the bridge deck concrete, the bridge deck should be rehabilitated or replaced to meet current standards and to mitigate excessive future maintenance costs.

Option 1 – Scarify and Bridge Deck Overlay

The maximum service life this option would provide is 25 years. The design life of this project is 30 years (ETC+30). This option does not the project objective of obtaining 30+ years of service life.

Option 2 – Bridge Deck Rehabilitation with 100% Deep Removal

This option will involve partial depth reconstruction with top mat rebar exposure of the entire bridge deck to remove the chloride contaminated concrete (100% deep removal). The existing bridge deck thickness is 8” with 2” of concrete cover over the top mat of reinforcing. The proposed partial depth reconstruction will include the additional 1 ½” of concrete to provide the standard 9 ½” bridge deck thickness. The existing top mat of reinforcing bars will be removed and replaced to accommodate the standard 3” of concrete cover. The existing sidewalk and curb with 4-rail bridge railing and pedestrian fence will be removed and replaced with a new sidewalk and curb with vertical faced bridge concrete barrier and pedestrian fence attached to the top of the barrier and the 2-rail bridge railing with curb will be removed and replaced with new single-slope concrete bridge barrier. The existing approach slabs will receive the same treatment as the deck. The existing bridge joints will be replaced with new elastomeric bridge joints and

seals. The Level 1 Load Rating for the final condition was found to be acceptable. This option would provide a service life of 35 years to the bridge deck. The construction cost of this option is $ 0.975 million.

Option 3 – Bridge Deck Replacement with Cast-In-Place Concrete

This option would involve the complete demolition of the existing bridge deck, sidewalk and curbs, 4-rail bridge railing and 2-rail bridge railing, and bridge deck joints. The bridge deck will be replaced with a new deck, sidewalk with curb and vertical faced concrete barrier with pedestrian fence on top of the barrier along the east side of the bridge and single-slope barrier along the west side of the bridge and new armorless bridge joints. The approach slabs would also be replaced under this option. The new bridge deck would be 9 ½" standard thickness as compared to the 8" existing thickness. The Level 1 Load Rating for the final condition was found to be acceptable. This option would provide a service life of 40 years to the bridge deck. The construction cost of this option is $ 1.33 million.

Option 4 – Bridge Deck Replacement with Pre-cast Concrete Deck Panels

This option will have the highest construction cost of all the options, however; traffic control costs may be lower due to reduced construction time. Comparison of accelerated construction to conventional construction is beyond the scope of work for this project at this time.

IN-DEPTH INSPECTION REPORT

D031085 P.I.N. 3501.60

B.I.N. 1053931

TEAM LEADER Andrew J. Fuller, P.E. 59848
NYSPE LICENSE #

ASSISTANT TEAM LEADER Jeffrey M. Reina, P.E.
ASSISTANT TEAM LEADER Logan Bessel
ASSISTANT TEAM LEADER Jerome Getter

FEATURE CARRIED I-690 Westbound
FEATURE CROSSED Bear Street Extension

DATE FIELD WORK BEGAN January 9, 2014
DATE FIELD WORK COMPLETED January 10, 2014

TABLE OF CONTENTS

- TP 349 & 350
- IN-DEPTH CONDITION DOCUMENTATION
- IN-DEPTH PHOTO DOCUMENTATION
- ASBESTOS REPORT

TP 349 & TP 350

BRIDGE ELEMENT RATINGS

Inspection Date: 10/26/2012 RC: 33 BIN: 1053931

Bridge Ratings

Carried: 690I 690I33012011 Crossed: BEAR ST EXTENSION CheckValue: 1,805,691,067

Inspection Agency: 10 - NYSDOT Type of Inspection: 1 - BIENNIAL
GTMS: 302 -- Steel - Stringer/Multi-Beam or Girder
POSTINGS: See Gen Rec Page 1 for Postings at time of inspection.
Further Investigation Needed: No
State Highway Number: 54-16 Milepoint: 7.42 AADT/Yr: 25733 / 2002
Orientation: 3 - East Political Unit: 2055 - City of SYRACUSE Year Built: 1968
Total Spans: 3 Ramp Bridge Attached To Span: NA BIN: NA
General Recommendation: 5 Computed Condition Rating: 5.047

Abutment Ratings:	**Beg Abut**	**End Abut**
Joint with Deck	8	8
Bearings, Bolts, Pads	7	7
Seats and Pedestals	5	5
Backwall	5	5
Stem (Breastwall)	8	8
Erosion or Scour	5	5
Footings	9	9
Piles	9	9
Recommendation	6	5

Wingwall Ratings:	**Beg Abut**	**End Abut**
Walls	5	5
Footings	9	9
Erosion or Scour	6	6
Piles	9	9

Channel Ratings:	**Channel**
Stream Alignment	8
Erosion and Scour	8
Waterway Opening	8
Bank Protection	8

Approach Ratings:	**Approaches**
Drainage	6
Embankment	6
Settlement	6
Erosion	6
Pavement	5
Guide Railing	5

Number of Flags Issued:

RED: 0 Yellow: 0 Safety: 0

Vulnerability Reviews Recommended: 1=Yes, 2=No, 3=NA, X=NotActive

Hydraulic: 3	Overload: X	Steel: 2
Collision: 2	Concrete: X	Seismic: X

Inspector's Signature: CheckValue: 1,805,691,067 Date: 10/26/2012

Peter Riehlman,PE () (Inspector ID:3000052)

Signed copy of this inspection report is available in the appropriate NYSDOT Regional Office

Reviewed By: Date: 11/28/2012

James R. Manning,PE () (QC ID:3000023)

Signed copy of this inspection report is available in the appropriate NYSDOT Regional Office

Inspection Date: 10/26/2012 RC: 33 BIN: 1053931

Span Ratings

Carried: 690I 690I33012011 Crossed: BEAR ST EXTENSION CheckValue: 1,805,691,067

Deck Element Ratings:	001	002	003
Wearing Surface	6	6	6
Curbs	6	6	6
Sidewalks, Fascias	4	4	4
Railings, Parapets	3	3	3
Scuppers	8	8	8
Gratings	8	8	8
Median	8	8	8
Mono Deck Surface	6	6	6

Superstructure Ratings:	001	002	003
Structural Deck	5	5	5
Primary Members	5	5	5
Secondary Members	5	5	5
Paint	7	7	7
Joints	5	5	8
Recommendation	5	5	5

Pier Ratings:	001	002	003
Bearings, Bolts, Pads	6	6	8
Pedestals	6	6	8
Top of Cap or Beam	4	6	8
Stem Solid Pier	8	8	8
Cap Beam	5	5	8
Pier Columns	6	5	8
Footings	9	9	8
Erosion or Scour	6	6	8
Piles	9	9	8
Recommendation	6	6	8

Utility Ratings:	001	002	003
Lighting	8	8	8
Sign Structure	8	5	7
Utilities and Support	5	5	5

Field Notes:

Field Date	Arrival	Departure	Temp (C)	Temp (F)	Weather Conditions
7/25/2012	1:30:00 PM	3:30:00 PM		70	ptly cldy
10/26/2012	9:00:00 AM	11:00:00 AM		70	ptly.cldy

IN-DEPTH CONDITION DOCUMENTATION

BIN 1053931

Visual Inspection

The bridge was built in 1968 with a major rehabilitation in 1984. During the 1984 rehabilitation miscellaneous concrete repairs were made to the abutments and piers under contract D500057. Superstructure repairs included painting structural steel, concrete bridge deck overlay, deck joint replacement. The last major rehabilitation of the structure occurred in 2002 under contact D259039 which included bearing replacement and miscellaneous substructure repair. The steel was painted under contract D261472 in 2010.

Cracks, spalls, and other field observations are shown on the plans. Below is a brief summary of conditions for each feature.

Superstructure

Deck – See Bridge Deck Evaluation Report

Steel – See Structural Steel Inspection Summary

Bearings – Bearing elements seemed to be in good condition. The elastomeric pads were intact and clean. Bearings were replaced in 2002 under contract D259039. Bearing sole plates contained some rust due to leaking bridge joints.

Substructure

West Abutment – The concrete backwall contained one area of delaminated concrete and cracking above pedestal 1. The stem and pedestals appeared to be in good condition. The wingwalls exhibited minor map-cracking and rust-staining.

Pier 1 – The concrete in pier 1 was typically in good condition. The concrete showed signs of staining from water leaking through the deck joints. The pedestals exhibited similar condition to the columns and cap beam. Some debris was discovered on the cap beam between pedestals 4 and 5. Further

investigation revealed the deck joint above contained severe spalling, exposed reinforcing and leaking joint seals.

Pier 2 – The concrete columns were typically in good condition with only minor isolated areas of delaminated concrete. Pedestal 1 contained delaminated concrete on the east face. The cap beam had areas of delaminated concrete under pedestals 1, 2, 3, and 6 on the east face and under pedestals 1, 4, and 5 on the west face. The concrete showed signs of staining from water leaking through the deck joints.

East Abutment – The concrete appeared to be in good condition but did contain isolated areas of rust staining. The wingwalls exhibited minor map-cracking and rust-staining.

STRUCTURAL STEEL INSPECTION SUMMARY

BIN 1053931

Special Emphasis Inspection Required

Non-Redundant/Fracture Critical Members – No

Pin and Hangers – No

Fatigue-Prone Welds – Yes

Non-Categorized Fatigue-Prone Details – No

Other (Specified in Text) – No

Special Emphasis Details:

100% hands on inspection of cover plate welds performed – no cracks found.

Overall Steel Condition:

Generally, the steel appeared to be in good condition. The bridge was recently painted in 2010 and seemed to be functioning for the majority of the structure. The steel showed signs of deterioration at the bearings due to leaking bridge deck joints. Steel repairs were noted on Girder 1 at the end of span 2 and beginning of span 3. The repair consisted of ¾" plate welded directly to the web to locally increase the web section thickness. Further investigation revealed the bridge deck joints are leaking above this repair and have started to corrode the existing repair. The paint condition of the repair indicates the repair was made after the structural steel painting in 2010. Structural flag documentation corroborates this observation.

Paint:

The paint is in typically good condition however, minor rust scale has formed on the diaphragms and girders under leaking bridge deck joints. The bridge was painted in 2010 under contract D261472. The area of the steel repair on Girder 1 contained the most significant paint deterioration on the structure.

Section Loss:

The 2012 Level 2 Load Rating showed 10% blanket section loss in the web of girder 1. This should be maintained in future ratings.

NOTE - REGULAR SPALLING ON TOP OF PARAPETS, SEE REFERENCE PHOTOS.

1.83 m
5.79 m
3.05 m
3 LANES @ 3.66 m = 10.98 m
CURB TO CURB 12.19 m
PIER IV
PIER III
PIER II
BIN 1053931
END APPROACH
BEGIN APPROACH
CRACK
Hollow Top 12"
Hollow 38"x16"
24"x16" Hollow - Spall Exposed Bar
10"x24" Spall
18"x12" Hollow
18"x12" Hollow
Hollow - Spalled Exposed Rebar
Hollow - Spall Exposed Rebar
C-1
C-2
C-3
14' SEVERE SPALLS IN PARAPET, EXPOSED REBAR 50% to 100% SECTION LOSS. EFFL. in CRACKS
4' SPALLS FALING TRAFFIC
14' ISOLATED SPALLS - EFFL., RUST STAINS
3' SPALL WITH EXPOSED REBAR (100% SECTION LOSS)
TOP of PARAPET HOLLOW SOUNDING (6'-0")
6' SPALL + HOLLOW FACE
2' SPALL W/ EXPOSED REBAR
12' MAP-CRACKING
14' TOP of PARAPET HOLLOW SOUNDING
14' TOP of Parapet HOLLOW SOUNDING

N

LEGEND

- C-X — CORE LOCATION
- XX — PHOTO LOCATION
- DELAMINATION
- SPALLING
- CRACK
- MAP CRACKING
- MOISTURE

BEAR ST WESTBOUND 1053931

AND ELEVATIONS FROM CONTRACT FIC 66-05.

G12	1	30WF132	48'-7"
G13	7	30WF132	47'-1"
G14	4	30WF116	47'-1"
G15	1	30WF132	48'-7"

BEARING DIMENSIONS				
MARK	No. REQD	TYPE	A	B
BR-1	24	Fixed	—	—
BR-2	26	Exp.	1¼"	4½"
BR-3	2	Fixed	—	—
BR-4	5	Fixed	—	—
BR-5	1	Fixed	—	—

BR-1 G1 BR-2 BR-3 G3 BR-2 BR-6 G5 BR-1

℄ Brgs. (Fix.) ℄ Brgs. (Exp.) ℄ Brgs. (Fix.) ℄ Brgs. (Exp.) ℄ Brgs. (Exp.) ℄ Brgs. (Fix.)

Bridge Fascia

FRAMING PLAN - STRUCTURE IB

Scale: ⅛"=1'-0"

LEGEND

- C-X — CORE LOCATION
- XX — PHOTO LOCATION
- DELAMINATION
- SPALLING
- CRACK
- MAP CRACKING
- MOISTURE

EXISTING GIRDER — 3/4" PLATE — 1'-8" TYP. — 10" TYP. — REPAIR DETAIL

GIRDER REPAIR

1'-8½" 12'-11½" 18'-10" 18'-10" 12'-5" 18'-5" 18'-5" 11'-7" 17'-9" 17'-9"

6" (Typ.)

55°-32'-55" (G7 & G8)

54°-31'-38" (G10 & G11)

55°-32'-31" (G13 & G14)

D1 (Typ. all Abut. Diaphragms)

D2 (Typ. all Intermediate Diaphragms)

D3 (Typ. all Pier Diaphragms)

4 Spcs.

5 Spaces @ 10'-4" = 51'-8"

4 Spaces @ 10'-4" = 41'-4"

90° (Typ. all Bays except as noted)

56°-16'-38" (G9)

55°-06'-39" (G12)

90° (Typ. No. Bays)

53°-59'-21" (G15)

10'-9½"

1'-10"

℄ Bridge Fascia ℄ Brgs. (Exp.) ℄ Brgs. (Fix.) ℄ Brgs. (Exp.) ℄ Brgs. (Exp.)

℄ W. Abut. Brgs. (Fix.) ℄ Pier 1 ℄ Pier 2 ℄ E. Abut. Brgs. (Fix.) ℄ Anchor Bolts

FRAMING PLAN - STRUCTURE IA

Scale: ½"=1'-0"

℄ Symm. about ℄ Girder

Length C. to C. of Bearings Shown in "Girder Schedule"

℄ Brgs

a b c d e

2" Gap (Typ.)

Shear Conn. Spacing (Pitch of Spiral) See Schedule

5" 6" Cover Rt. - Interior Cover Rt. - Fascia } For lengths, see Schedule.

TYPICAL END SPAN GIRDER

No Scale

TYPICAL CENTER SPAN GIRDER

No Scale

BIN 1053931
I-690 WESTBOUND
OVER BEAM STREET
EXTENSION

GKS/JAL/CRS planning
EWB

ERDMAN, ANTHONY & MOSLEY, I

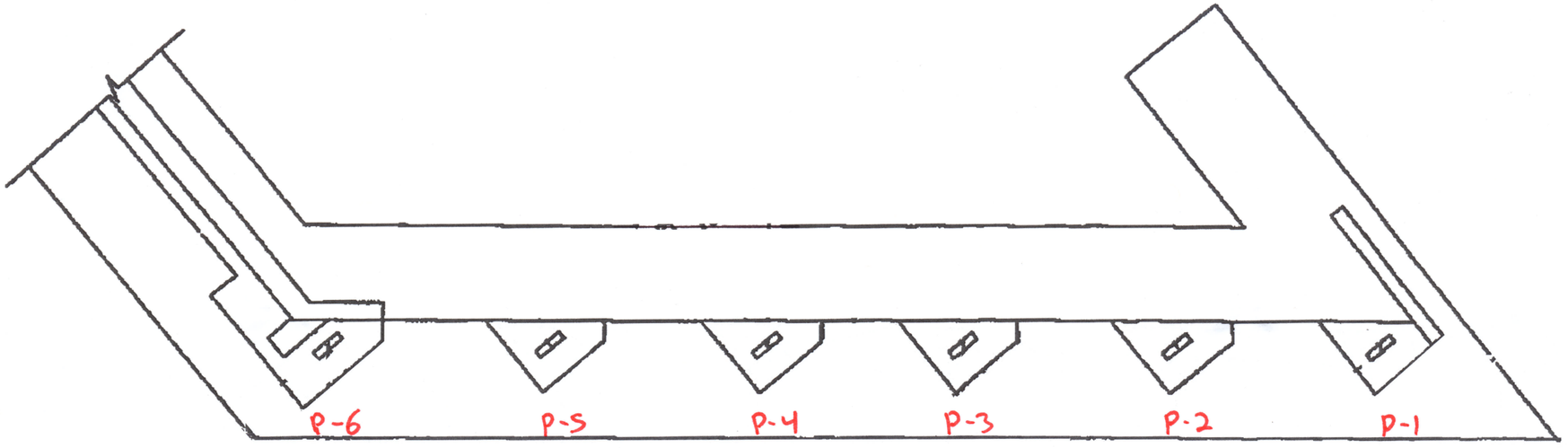

LEGEND

C-X — CORE LOCATION

XX — PHOTO LOCATION

DELAMINATION

SPALLING

CRACK

MAP CRACKING

MOISTURE

PLAN

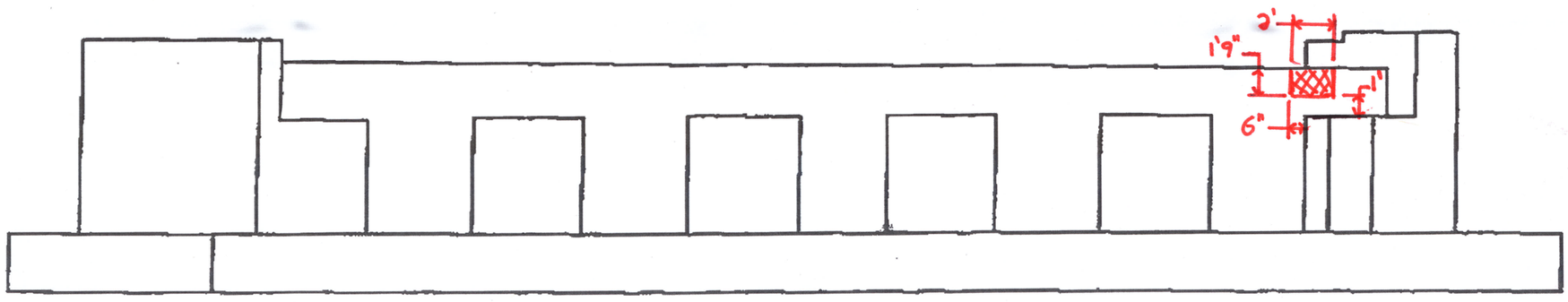

ELEVATION

BIN 1053931
WESTBOUND BRIDGE

WEST ABUTMENT

BIN 1053931
I-690 WESTBOUND
OVER BEAR STREET
EXTENSION

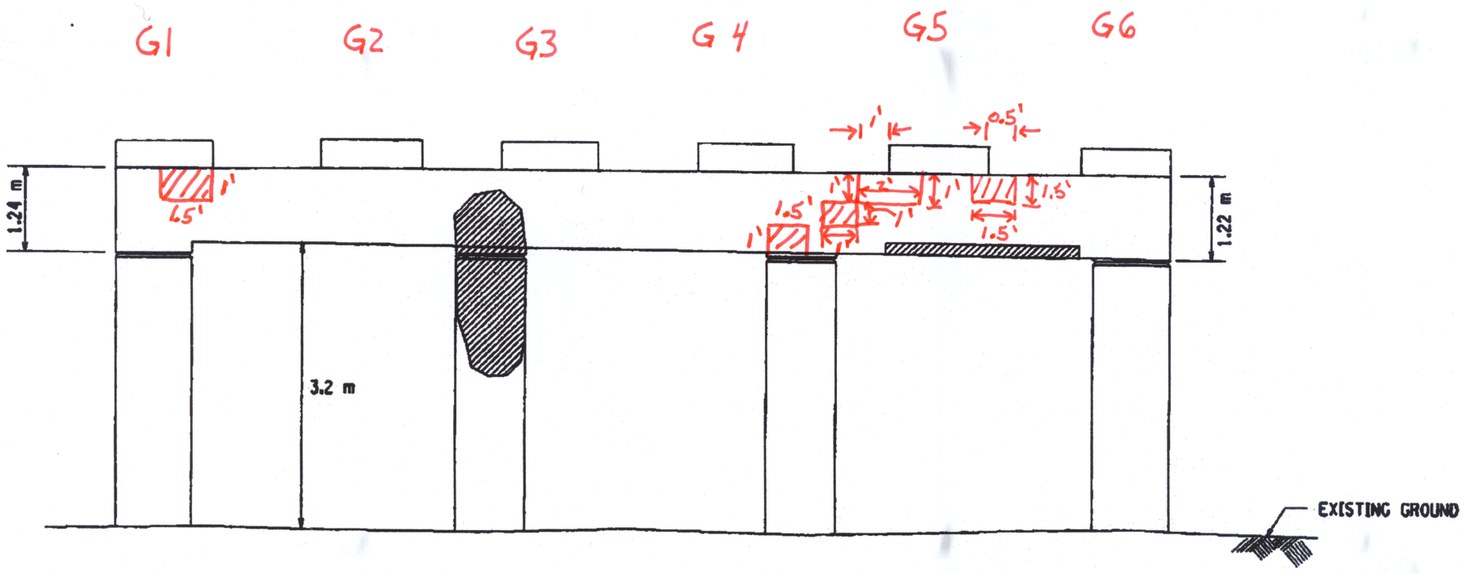

PIER 2
FACING EAST

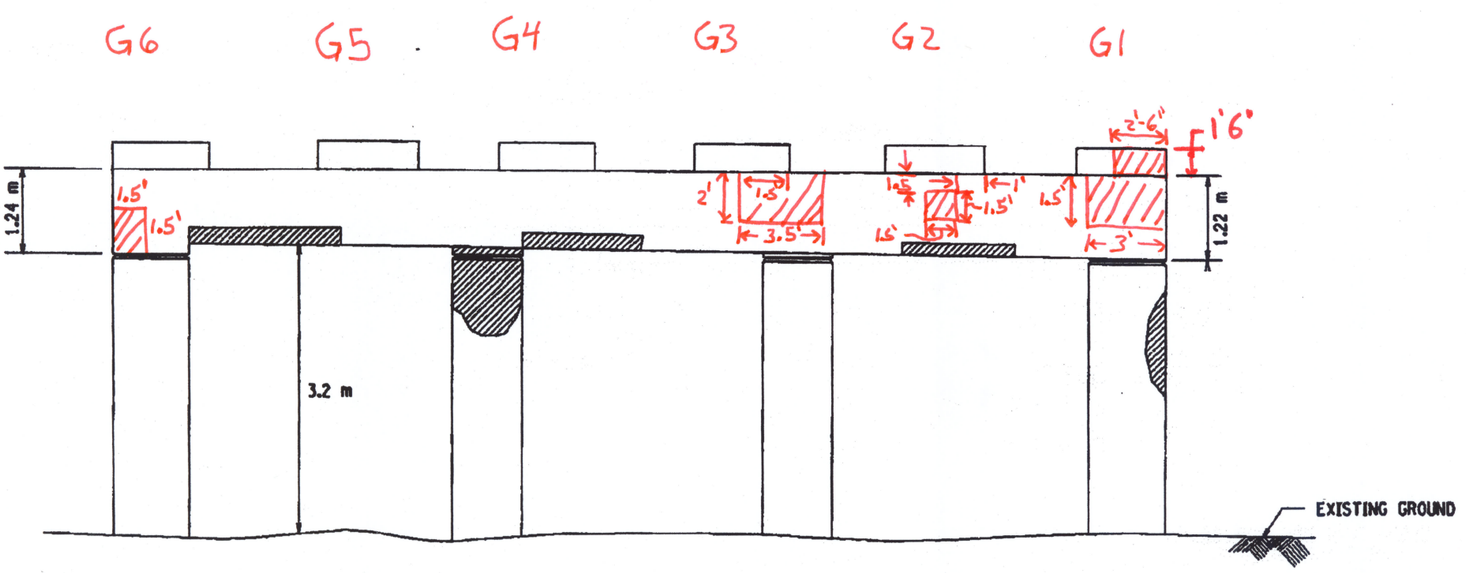

PIER 2
FACING WEST

LEGEND

- C-X — CORE LOCATION
- XX — PHOTO LOCATION
- DELAMINATION
- SPALLING
- CRACK
- MAP CRACKING
- MOISTURE

BIN 1053931
PIER 4

IN-DEPTH PHOTO DOCUMENTATION

C&S Engineers, Inc.
499 Col. Eileen Collins Blvd.
Syracuse, New York 13212
Phone: (315) 455-2000
Fax: (315) 455-9667
www.cscos.com

I-690 WB over Bear St. Extension - BIN 1053931



DESCRIPTION: BEGIN ABUTMENT – ELEVATION – LOOKING WEST – CONTAINS ISOLATED DELAMINATED AND SPALLING CONCRETE

PHOTO 1



DESCRIPTION: BEGIN ABUTMENT – PEDESTAL 1 – PEDESTAL CONCRETE SOLID – BEARING ELEMENTS CLEAN – CONCRETE SPALL IN BACKWALL

PHOTO 2

C&S Engineers, Inc.
499 Col. Eileen Collins Blvd.
Syracuse, New York 13212
Phone: (315) 455-2000
Fax: (315) 455-9667
www.cscos.com

I-690 WB over Bear St. Extension - BIN 1053931



DESCRIPTION: BEGIN ABUTMENT – BACKWALL – LOOKING WEST – ABOVE PEDESTAL 1 – CONCRETE REPAIR – CRACKED AND SPALL

PHOTO 3



DESCRIPTION: BEGIN ABUTMENT – PEDESTAL 2 – CONCRETE SOLID – BEARING ELEMENTS CLEAN – TYPICAL ALL BEGIN ABUTMENT BEARINGS

PHOTO 4

C&S Engineers, Inc.
499 Col. Eileen Collins Blvd.
Syracuse, New York 13212
Phone: (315) 455-2000
Fax: (315) 455-9667
www.cscos.com

I-690 WB over Bear St. Extension - BIN 1053931



DESCRIPTION: BEGIN ABUTMENT – PEDESTAL 3 – DIAPHRAGM, BEARING, AND DECK CONNECTION DETAIL

PHOTO 5



DESCRIPTION: BEGIN RIGHT WINGWALL – LOOKING NORTHWEST – MAP-CRACKING AND RUST-STAINING – TYPICAL WINGWALLS

PHOTO 6

C&S Engineers, Inc.
499 Col. Eileen Collins Blvd.
Syracuse, New York 13212
Phone: (315) 455-2000
Fax: (315) 455-9667
www.cscos.com

I-690 WB over Bear St. Extension - BIN 1053931



DESCRIPTION: PIER 1 – BEGIN FACE – LOOKING EAST – WATER STAINS AND RUST STAINS - TYPICAL

PHOTO 7



DESCRIPTION: PIER 1 – BEGIN FACE – LOOKING EAST – WATER STAINS AND RUST STAINS - TYPICAL

PHOTO 8

C&S Engineers, Inc.
499 Col. Eileen Collins Blvd.
Syracuse, New York 13212
Phone: (315) 455-2000
Fax: (315) 455-9667
www.cscos.com

I-690 WB over Bear St. Extension - BIN 1053931



DESCRIPTION: PIER 1 – END FACE – LOOKING WEST – WATER STAINS, RUST STAINS - TYPICAL

PHOTO 9



DESCRIPTION: PIER 1 – BEGIN FACE – PEDESTAL 3 – STEEL IS CORRODED DUE TO LEAKING DECK JOINT – TYPICAL ALL BEARINGS ON PIER 1

PHOTO 10

C&S Engineers, Inc.
499 Col. Eileen Collins Blvd.
Syracuse, New York 13212
Phone: (315) 455-2000
Fax: (315) 455-9667
www.cscos.com

I-690 WB over Bear St. Extension - BIN 1053931



DESCRIPTION: PIER 1 – CAP BEAM – LOOKING WEST – BETWEEN PEDESTALS 4 AND 5 – DEBRIS ON CAP BEAM FROM DECK JOINT DETERIORATION

PHOTO 11



DESCRIPTION: PIER 1 – DECK JOINT – BETWEEN PEDESTALS 5 AND 6 – CONCRETE SPALLING, EXPOSED REINFORCING STEEL, LEAKING JOINT

PHOTO 12

C&S Engineers, Inc.
499 Col. Eileen Collins Blvd.
Syracuse, New York 13212
Phone: (315) 455-2000
Fax: (315) 455-9667
www.cscos.com

I-690 WB over Bear St. Extension - BIN 1053931



DESCRIPTION: PIER 2 – BEGIN FACE – LOOKING NORTHEAST – WATER AND RUST STAINS - TYPICAL

PHOTO 13



DESCRIPTION: PIER 2 – END FACE – LOOKING WEST – WATER AND RUST STAINS – ISOLATED CONCRETE DELAMINATION

PHOTO 14

C&S Engineers, Inc.
499 Col. Eileen Collins Blvd.
Syracuse, New York 13212
Phone: (315) 455-2000
Fax: (315) 455-9667
www.cscos.com

I-690 WB over Bear St. Extension - BIN 1053931



DESCRIPTION: PIER 2 – PEDESTAL 3 – BEARINGS – STEEL CONTAINS MINOR CORROSION

PHOTO 15



DESCRIPTION: PIER 2 – PEDESTAL 1 — LOOKING SOUTHEAST – DELAMINATED CONCRETE BELOW PEDESTAL 1 – STEEL REPAIR CONTAINS CORROSION

PHOTO 16

C&S Engineers, Inc.
499 Col. Eileen Collins Blvd.
Syracuse, New York 13212
Phone: (315) 455-2000
Fax: (315) 455-9667
www.cscos.com

I-690 WB over Bear St. Extension - BIN 1053931



DESCRIPTION: PIER 2 – GIRDER 1 – STEEL REPAIRS CORRODED FROM LEAKING DECK JOINT.

PHOTO 17



DESCRIPTION: PIER 2 – PEDESTAL 1 – END FACE – LOOKING WEST – CONCRETE SPALL – STAINS FROM LEAKING DECK JOINT ABOVE

PHOTO 18

C&S Engineers, Inc.
499 Col. Eileen Collins Blvd.
Syracuse, New York 13212
Phone: (315) 455-2000
Fax: (315) 455-9667
www.cscos.com

I-690 WB over Bear St. Extension - BIN 1053931



DESCRIPTION: END ABUTMENT – LOOKING EAST

PHOTO 19



DESCRIPTION: END ABUTMENT – PEDESTAL 5 LOOKING SOUTHEAST – CONCRETE IS SOLID WITH SOME RUST STAINING - TYPICAL

PHOTO 20

C&S Engineers, Inc.
499 Col. Eileen Collins Blvd.
Syracuse, New York 13212
Phone: (315) 455-2000
Fax: (315) 455-9667
www.cscos.com

I-690 WB over Bear St. Extension - BIN 1053931



DESCRIPTION: END ABUTMENT – PEDESTAL 3 – TYPICAL CONCRETE CONDITION – BIN PLATE IS NOT LEGIBLE

PHOTO 21



DESCRIPTION: END ABUTMENT – LEFT WINGWALL – ISOLATED AREA OF RUST STAINING

PHOTO 22

C&S Engineers, Inc.
499 Col. Eileen Collins Blvd.
Syracuse, New York 13212
Phone: (315) 455-2000
Fax: (315) 455-9667
www.cscos.com

I-690 WB over Bear St. Extension - BIN 1053931



DESCRIPTION: BRIDGE ELEVATION

PHOTO 23



DESCRIPTION: BRIDGE DECK - LOOKING EAST

PHOTO 24

Photo Log Map

N

LEGEND

XX PHOTO LOCATION

XX HIDDEN PHOTO LOCATION

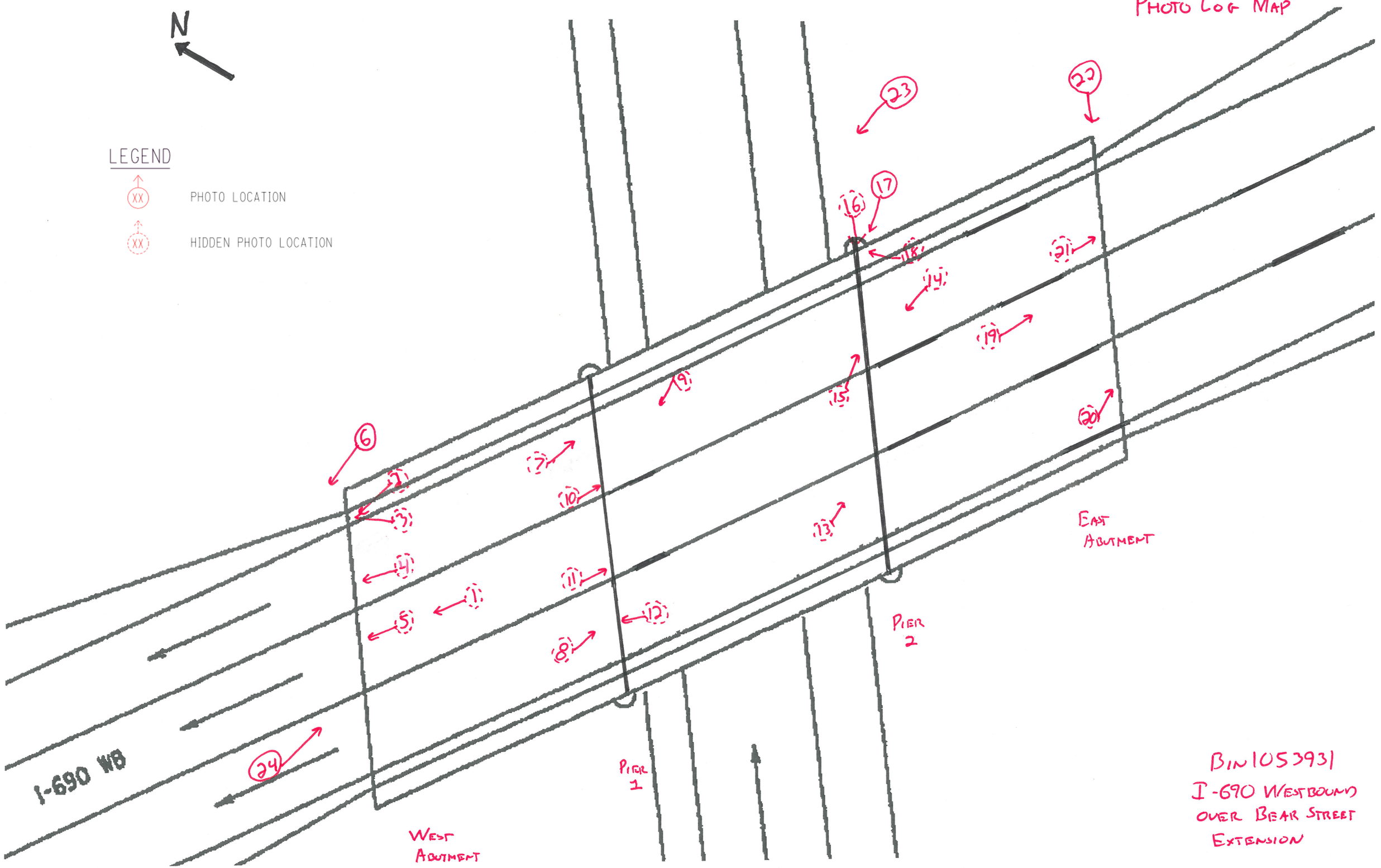

BIN 1053931
I-690 Westbound over Bear Street Extension

ASBESTOS DOCUMENTATION

ASBESTOS DOCUMENTATION FROM WATTS ARCHITECTURE & ENGINEERING, INC.

(WILL REPLACE BIN FOLDER ASBESTOS REPORT UPON COMPLETION)

ATHENICA
ENVIRONMENTAL SERVICES INC.
Tel (718) 784-7490
Fax (718) 784-4085

BULK (NOB) ASBESTOS ANALYSIS BY POLARIZED LIGHT MICROSCOPY AND TRANSMISSION ELECTRON MICROSCOPY

CLIENT: NYSDOT # 3
LABORATORY ID #: 05-05-127
DATES OF ANALYSIS: 06/01/05

PROJECT#: 1053931
ANALYT. METHODOLOGIES: ELAP 198.1, ELAP 198.4
DATE OF REPORT: 06/01/05

LABORATORY RESULTS

CLIENT #	LAB. ID #	LOCATION	%ORG	%ASI	%AII	PLM RESULTS	TYPE OF ASBEST.	TEM RESULTS	TYPE OF ASBEST.	POSIT. / NEGAT.
01	05-05-127-01	Steel Paint Coat, G2, Beg Rt. Web, Span 1, Beg.	39.80	13.82	46.38	**ND**	NA	**Trace**	Anthoph.	**Negat.**
02	05-05-127-02	Steel Paint Coat, G4, Beg Rt. Web, Span 1, 0.5 m Beg.	44.08	8.58	47.34	**ND**	NA	**Trace**	Anthoph.	**Negat.**
03	05-05-127-03	Steel Paint Coat, G5, Beg Rt. Web, Span 1, 0.5 m Beg.	41.13	10.94	47.92	**ND**	NA	**Trace**	Anthoph.	**Negat.**

E. Sioukri

ANALYST
E. Sioukri

LABORATORY DIRECTOR
Spiro Dongaris

LABORATORY CERTIFICATION NUMBERS: NVLAP 101958, ELAP 10955

- Athenica Environmental Services Inc. (AES), is responsible only for information pertaining to samples taken by its employees.
- Samples will be stored for sixty (60) days. AES Inc., should be notified within this time frame for a true duplicate analysis.
- The report relates only to items tested. This report must not be used to claim product endorsement by NVLAP or any other agency of the U.S. Government. Test reports may not be reproduced except in full and with prior approval of AES Inc.
- The liability of Athenica Environmental Services Inc. with respect to the services charged, shall in no event exceed the amount of the invoice.

ATHENICA
ENVIRONMENTAL SERVICES INC.
45-09 GREENPOINT AVENUE
LONG ISLAND CITY, NY 11104
Tel. (718) 784-7490
Fax. (718) 784-4085

PROJECT NO. (ATHENICA FILE#) C003314 SITE BIN # 1053971

METHOD OF SHIPMENT U.S. MAIL DATE 5/27/2005

INSPECTOR Gary W Cook

NUMBER OF SAMPLES 3 TYPE OF ANALYSIS REQUESTED ☐ PLM ☒ NOB-PLM ☒ NOB-TEM ☐ OTHERS

TURNAROUND TIME ☐ 6 HRS ☐ 12 HRS ☐ 24 HRS ☒ OTHER HRS

COMMENTS ATT: CHRISTOPHER ANDERSON
333 E. WASHINGTON ST. SYRACUSE, N.Y. 13202

HOM. AREA	SAMLPLE #	SAMPLE DESCRIPTION	SAMPLE LOCATION	FIELD COMMENTS	LABORATORY RESULTS		
					PLM	PLM-NOB	TEM-NOB
1053971	01	STEEL PAINT COAT	G2, Beg Lt Web	Span 1, Beg			
1053971	02	"	G4, Beg, Rt Web	Span 1, 5m Beg			
1053971	03	"	G5, Beg, Rt Web,	Span 1, 5m Beg			

TRANSMITTAL OF RESULTS :
☒ STANDARD
☐ TELEPHONE RESULTS TO
☐ FAX RESULTS TO

TELEPHONE # : (315) 428-4628
FAX # :

BATCH # : 05-05-127

CHAIN OF CUSTODY RECORD

RELINQUISHED BY :	Gary W Cook	DATE :	05/26/2005	TIME :	8:20 AM
RECEIVED BY :	MM/NA 16	DATE :	5/31/2005	TIME :	
ANALYST :		DATE :	6/01/2005	TIME :	

LABORATORY ACCREDITATION :
NVLAP# 101958 ELAP# 10955

NEW YORK STATE
DEPARTMENT OF TRANSPORTATION
D031085 P.I.N 3501.60

LEVEL 1 LOAD RATING
B.I.N. 1053931
I-690 Westbound over Bear Street Extension

LOAD RATING SUMMARY TABLE (LOAD FACTOR)					
CONTROLLING MEMBER	**CONTROLLING PARAMETER**	**LIVE LOAD**	**LIVE LOAD TYPE**	**INVENTORY RATING**	**OPERATING RATING**
(S1/ G3) INTERIOR GIRDER	SERVICE	HS20-44	Axle Load	HS 32.14 (57.86 TONS)	HS 53.68 (96.62 TONS)
(S1/ G2) INTERIOR GIRDER	SERVICE	ALTERNATE MILITARY LOADING	Axle Load	1.808 (43.39 TONS)	3.019 (72.46 TONS)

DOES NOT INCLUDE FUTURE WEARING COURSE

ANALYSIS METHOD:LOAD FACTOR

RECOMMENDED POSTING AS-IS CONDITION: _____ Tons _X_ None

CALCULATED BY:

STATE OF NEW YORK CHARLES P. BROOKS III 089275 LICENSED PROFESSIONAL ENGINEER

DATE: 4/2/14

QUALITY ASSURANCE BY:

STATE OF NEW YORK PAUL F. BYRNE 055928 LICENSED PROFESSIONAL ENGINEER

DATE: 5/09/14

C&S COMPANIES®

499 Col. Eileen Collins Blvd.
Syracuse, NY 13212
phone 315-455-2000
fax 315-455-9667
www.cscos.com

ENGINEERS
DESIGN BUILD
TECHNICAL RESOURCES
OPERATIONS

C&S Engineers, Inc.
Syracuse Hancock International Airport
Syracuse, NY 13212
phone 315-455-2000
fax 315-455-9667
www.cscos.com

TECHNICAL MEMORANDUM

TO: FILE (190.514.001)

FROM: JESSICA S. BAUER, P.E.
NYSPE 084915

DATE: FEBRUARY 5, 2014

C&S PROJECT NO.: 190.514.001

RE: SEISMIC ASSESSMENT SUMMARY
NEW YORK STATE DEPARTMENT OF TRANSPORTATION
D031085; PIN 3501.60; I-81

BIN: 1053931 Seismic Assessment

This memorandum summarizes the seismic assessment conducted for BIN 1053931 as part of the Interstate 81 Project in Syracuse, NY. The purpose of the assessment is to determine if seismic retrofits are warranted at the superstructure to substructure connection, and if further seismic evaluation of the structure is required. This memorandum will give the assessment results, retrofits required and recommendations for further seismic evaluation of the structure.

ASSESSMENT PROCEDURE

The seismic assessment was performed in accordance with the FHWA Seismic Retrofitting Manual for Highway Structures: Part 1 - Bridges, January 2006. As per the referenced manual, seismic assessment was performed for both lower level and upper level earthquake ground motion. The lower level earthquake ground motion has a reasonable likelihood of occurrence within the life of the bridge (50% probability of exceedance within a 75 year bridge life). The upper level earthquake ground motion has a finite likelihood of occurrence within the life of the bridge (7% probability of exceedance within a 75 year bridge life).

Values for the spectral acceleration for the Syracuse area used in the assessment are as follows:

- Lower Level Earthquake Ground Motion for a Short Period (0.2 seconds): $S_S = 0.0251$
- Lower Level Earthquake Ground Motion for a Long Period (1.0 seconds): $S_1 = 0.0076$
- Upper Level Earthquake Ground Motion for a Short Period (0.2 seconds): $S_S = 0.139$
- Upper Level Earthquake Ground Motion for a Long Period (1.0 seconds): $S_1 = 0.047$

These values are considered constant and are the same for all seismic assessments of bridges in the Syracuse area.

The Site Class is based on the soil conditions at the bridge location. It was determined that this parameter has little effect on the results of the seismic assessment because the spectral

You created this PDF from an application that is not licensed to print to novaPDF printer (http://www.novapdf.com)

acceleration values for the Syracuse area are small. Based on this, a site class of D was used for all seismic assessments of bridges in the Syracuse area.

Bridge parameters used in the seismic assessment were retrieved from the record drawings and WinBolts data.

The seismic assessment takes into account the anticipated service life, importance, and the seismic exposure of the bridge to determine a seismic retrofit category (SRC). The SRC is then used to determine seismic evaluation methods and retrofit measures. There are four SRCs, A through D. Seismic retrofit category A is the lowest category; bridges in this category do not require retrofits or further seismic evaluation. Seismic retrofit category D is the highest category; bridges in this category requiring the most rigorous seismic evaluations and retrofits.

ASSESSMENT RESULTS

The SRC for the bridge is "**C**" for lower level earthquake ground motion and "**B**" for upper level earthquake ground motion.

RETROFITS REQUIRED

Bearing replacements and seat width improvements are not required at the abutments and piers. Additional retrofits may be required if further seismic evaluation is needed.

RECOMMENDATIONS FOR FURTHER SEISMIC EVALUATION

No further seismic evaluation is required for lower level earthquake ground motion. For the upper level earthquake ground motion, it is recommended that the capacities of the bearings are checked as per Section 5.2 of the referenced manual.

Retrofit cost estimates will be provided after any further required seismic evaluations are completed.

You created this PDF from an application that is not licensed to print to novaPDF printer (http://www.novapdf.com)

ENGINEERS
DESIGN BUILD
TECHNICAL RESOURCES
OPERATIONS

C&S Companies

C&S Engineers, Inc.
Syracuse Hancock International Airport
Syracuse, NY 13212
phone 315-455-2000
fax 315-455-9667
www.cscos.com

TECHNICAL MEMORANDUM

TO: **FILE (190.514.001)**

FROM: **PAUL BYRNE, P.E.**
NYSPE 055928

DATE: **JUNE 5, 2014**

C&S PROJECT NO.: 190.514.001

RE: **NEW YORK STATE DEPARTMENT OF TRANSPORTATION**
D031085; PIN 3501.60; I-81 Opportunities, BIN 1053931 Fatigue Evaluation

---

This memorandum documents a fatigue evaluation conducted for the existing Interstate 81 Viaduct Project. Existing structures with AASHTO Category D, E, and E' fatigue-prone details require 100% hands-on inspection unless proven to be exempt. The purpose of the evaluation is to assess the remaining life of fatigue-prone components.

EVALUATION PROCEDURES

The fatigue evaluation was performed in accordance with the AASHTO Guide Specification for Fatigue Evaluations of Existing Steel Bridges, 1990. Fatigue-prone welds identified in the biennial inspection reports were located on record drawings and confirmed visually in the field. Additional information concerning fatigue-prone welds located in BIN folders was also obtained and reviewed prior to inspection.

EVALUATION RESULTS

The results of the fatigue evaluation of the existing bridge are shown below. The remaining safe fatigue life of the Internal Girder fatigue components for all spans have been **exhausted**.

Fatigue Detail Location	Remaining Safe Fatigue Life (Years)	Remaining Mean Fatigue Life (Years)
All Spans, Exterior Girders, End of Bottom Flange Cover Plate	Infinite	Infinite
All Spans, Interior Girders, End of Bottom Flange Cover Plate	-19.84	12.33

E. Recommendations

The purpose of this deck evaluation is to document and determine existing conditions of the deck. It will be used as a tool for developing the scope of work and cost estimates for the development and comparison of alternatives for the overall project.

This bridge deck does not have any (0%) delaminated deck areas. Due to the age, condition and chloride-ion content of the bridge deck concrete, the bridge deck should be rehabilitated or replaced to meet current design standards and to mitigate excessive future maintenance costs.

Option 1 – Scarify and Bridge Deck Overlay
The maximum service life this option would provide is 25 years. The design life of this project is 30 years (ETC + 30). This option does not meet the project objective of obtaining 30+ years of service life.

Option 2 – Bridge Deck Rehabilitation with 100% Deep Removal
This option will involve partial depth reconstruction with top mat rebar exposure of the entire bridge deck to remove the chloride contaminated concrete (100% deep removal). The existing bridge deck thickness is 9 ¾" with nearly 4" of concrete cover over the top mat of reinforcing. The proposed partial depth reconstruction will provide the standard 9 ½" bridge deck thickness. The existing top mat of reinforcing bars will be removed and replaced to accommodate the standard 3" of concrete cover. The existing parapet and safety walk on the outsides of this bridge will be removed and replaced with single-slope concrete barrier. The existing deteriorated bridge joints will be replaced with armorless bridge joints. The Level 1 Load Rating for the final condition was found to be acceptable. This option would provide a service life of 35 years to the bridge deck. The construction cost of this option is $ 0.534 million.

Option 3 – Bridge Deck Replacement with Cast-In-Place Concrete

This option would involve the complete removal of the bridge deck, bridge deck joints, and parapet walls down to the existing steel girders. The bridge deck would be replaced with a new concrete deck, single-slope concrete barrier and new armorless bridge joints. The new bridge deck would be 9 ½" standard thickness as compared to the 9 ¾" existing thickness. The Level 1 Load Rating for the final condition was found to be acceptable. This option would provide a service life of 40 years to the bridge deck. The construction cost of this option is $ 0.638 million.

Option 4 – Bridge Deck Replacement with Pre-cast Concrete Deck Panels

This option will have the highest construction cost of all the options; however, traffic control costs may be lower due to the reduced construction time. Comparison of accelerated construction versus conventional construction is beyond the scope of work for this project at this time.

IN-DEPTH INSPECTION REPORT

D031085 P.I.N. 3501.60

B.I.N. 1053932

TEAM LEADER Andrew J. Fuller, P.E. 59848
NYSPE LICENSE #

ASSISTANT TEAM LEADER Jeffrey M. Reina, P.E.
ASSISTANT TEAM LEADER Logan Bessel
ASSISTANT TEAM LEADER Jerome Getter

FEATURE CARRIED I-690 Eastbound
FEATURE CROSSED Bear Street Extension

DATE FIELD WORK BEGAN January 10, 2014
DATE FIELD WORK COMPLETED January 14, 2014

TABLE OF CONTENTS

- TP 349 & 350
- IN-DEPTH CONDITION DOCUMENTATION
- IN-DEPTH PHOTO DOCUMENTATION
- ASBESTOS REPORT

TP 349 & TP 350

BRIDGE ELEMENT RATINGS

Inspection Date: 10/26/2012 RC: 33 BIN: 1053932

Bridge Ratings

Carried: 690I 690I33012011 Crossed: BEAR ST EXTENSION CheckValue: 1,805,665,146

Inspection Agency: 10 - NYSDOT Type of Inspection: 1 - BIENNIAL
GTMS: 302 -- Steel - Stringer/Multi-Beam or Girder
POSTINGS: See Gen Rec Page 1 for Postings at time of inspection.
Further Investigation Needed: No
State Highway Number: 54-16 Milepoint: 7.52 AADT/Yr: 25733 / 2002
Orientation: 3 - East Political Unit: 2055 - City of SYRACUSE Year Built: 1968
Total Spans: 3 Ramp Bridge Attached To Span: NA BIN: NA
General Recommendation: 5 Computed Condition Rating: 5.094

Abutment Ratings:	**Beg Abut**	**End Abut**
Joint with Deck	8	8
Bearings, Bolts, Pads	7	7
Seats and Pedestals	5	5
Backwall	5	5
Stem (Breastwall)	8	8
Erosion or Scour	5	5
Footings	9	9
Piles	9	9
Recommendation	5	5

Wingwall Ratings:	**Beg Abut**	**End Abut**
Walls	5	5
Footings	9	9
Erosion or Scour	6	6
Piles	9	9

Channel Ratings:	**Channel**
Stream Alignment	8
Erosion and Scour	8
Waterway Opening	8
Bank Protection	8

Approach Ratings:	**Approaches**
Drainage	6
Embankment	6
Settlement	6
Erosion	6
Pavement	6
Guide Railing	5

Number of Flags Issued:

RED: 0 Yellow: 0 Safety: 0

Vulnerability Reviews Recommended: 1=Yes, 2=No, 3=NA, X=NotActive

Hydraulic: 3	Overload: X	Steel: 2
Collision: 2	Concrete: X	Seismic: X

Inspector's Signature: CheckValue: 1,805,665,146 Date: 10/26/2012

Peter Riehlman,PE () (Inspector ID:3000052)

Signed copy of this inspection report is available in the appropriate NYSDOT Regional Office

Reviewed By: Date: 11/28/2012

James R. Manning,PE () (QC ID:3000023)

Signed copy of this inspection report is available in the appropriate NYSDOT Regional Office

Inspection Date: 10/26/2012 RC: 33 BIN: 1053932

Span Ratings

Carried: 690I 690I33012011 Crossed: BEAR ST EXTENSION CheckValue: 1,805,665,146

Deck Element Ratings:	001	002	003
Wearing Surface	6	6	6
Curbs	6	6	6
Sidewalks, Fascias	4	4	4
Railings, Parapets	3	3	3
Scuppers	8	8	8
Gratings	8	8	8
Median	8	8	8
Mono Deck Surface	6	6	6

Superstructure Ratings:	001	002	003
Structural Deck	5	5	5
Primary Members	5	5	5
Secondary Members	4	5	4
Paint	6	6	6
Joints	5	4	8
Recommendation	5	5	5

Pier Ratings:	001	002	003
Bearings, Bolts, Pads	7	7	8
Pedestals	6	6	8
Top of Cap or Beam	7	7	8
Stem Solid Pier	8	8	8
Cap Beam	5	5	8
Pier Columns	6	6	8
Footings	9	9	8
Erosion or Scour	6	6	8
Piles	9	9	8
Recommendation	6	6	8

Utility Ratings:	001	002	003
Lighting	6	8	8
Sign Structure	6	6	8
Utilities and Support	6	6	6

Field Notes:

Field Date	Arrival	Departure	Temp (C)	Temp (F)	Weather Conditions
7/25/2012	1:30:00 PM	3:30:00 PM		70	ptly cldy
10/26/2012	9:00:00 AM	11:30:00 AM		70	ptly cldy

IN-DEPTH CONDITION DOCUMENTATION

IN DEPTH INSPECTION REPORT

BIN 1053932

Visual Inspection

The bridge was built in 1968 with a major rehabilitation in 1984. During the 1984 rehabilitation miscellaneous concrete repairs were made to the abutments and piers under contract D500057. Superstructure repairs included painting structural steel, concrete bridge deck overlay, and deck joint replacement. The last major rehabilitation of the structure occurred in 2002 under contact D259039 which included bearing replacement and miscellaneous substructure repair. The steel was painted under contract D261472 in 2010.

Cracks, spalls, and other field observations are shown on the plans. Below is a brief summary of conditions for each feature.

Superstructure

Deck – See Bridge Deck Evaluation Report

Steel – See Structural Steel Inspection Summary

Bearings – Bearing elements seemed to be in good condition. The elastomeric pads were intact and clean. Visual inspection indicated a corner of the bearing base plate hangs over the strip edge of the pier cap on both piers.

Substructure

West Abutment – The concrete pedestals contained only minor isolated areas of delaminated concrete and cracking. The concrete backwall contained areas of delaminated concrete near pedestals 5 and 6. Rust stains were evident on the backwall between pedestals 2 to 5. Efflorescence was along a previous repair between pedestals 4 and 5. The wingwalls contained only minor isolated areas of delaminated concrete and cracking.

Pier 1 – The concrete pedestals contained only minor isolated areas of delaminated concrete and cracking. The cap beam had areas of delaminated concrete near pedestal 2 on the east face and near pedestals 1 and 4 on the

west face. Columns 1, 2, and 4 had areas of delaminated concrete towards the top of the columns. The metal gutter and hangers above the pier were rusted through.

Pier 2 – The concrete pedestals contained only minor isolated areas of delaminated concrete and cracking. The cap beam contained areas of delaminated concrete below pedestal 6 on the east face and below pedestals 1, 2, and 6 on the west face. Columns 1, 2, and 3 had areas of delaminated concrete towards the cap beam. The metal gutter and hangers above the pier were rusted through.

East Abutment – The concrete pedestals contained only minor isolated areas of delaminated concrete and cracking. The concrete backwall had an area of delamination above the pedestals from pedestals 1 to 4, with spalled concrete behind pedestal 1, and a section of spalled and delaminated concrete by pedestal 6. Rust stains and cracking were throughout the entire backwall. The cheekwall by pedestal 1 had a section of delaminated concrete. The wingwalls contained only minor isolated areas of delaminated concrete and cracking.

STRUCTURAL STEEL INSPECTION SUMMARY

BIN 1053931

Special Emphasis Inspection Required

Non-Redundant/Fracture Critical Members – No

Pin and Hangers – No

Fatigue-Prone Welds – Yes

Non-Categorized Fatigue-Prone Details – No

Other (Specified in Text) – No

Special Emphasis Details

100% hands on inspection of cover plate welds performed – no cracks found.

Overall Steel Condition

Generally, the steel appeared to be in good condition. The bridge was recently painted in 2010 and seemed to be functioning for the majority of the structure. Over Pier 1 and Pier 2 in the first bay near pedestal 2 the diaphragms have section loss to the web and bottom flange next to the drain. On Span 2 the first girder has numerous impact locations.

Paint

The paint is in typically good condition however, minor rust scale has formed on diaphragms and girders under leaking bridge deck joints. The bridge was painted in 2010 under contract D261472.

Section Loss

Due to the age of the steel a blanket 5% section loss should be used in load rating.

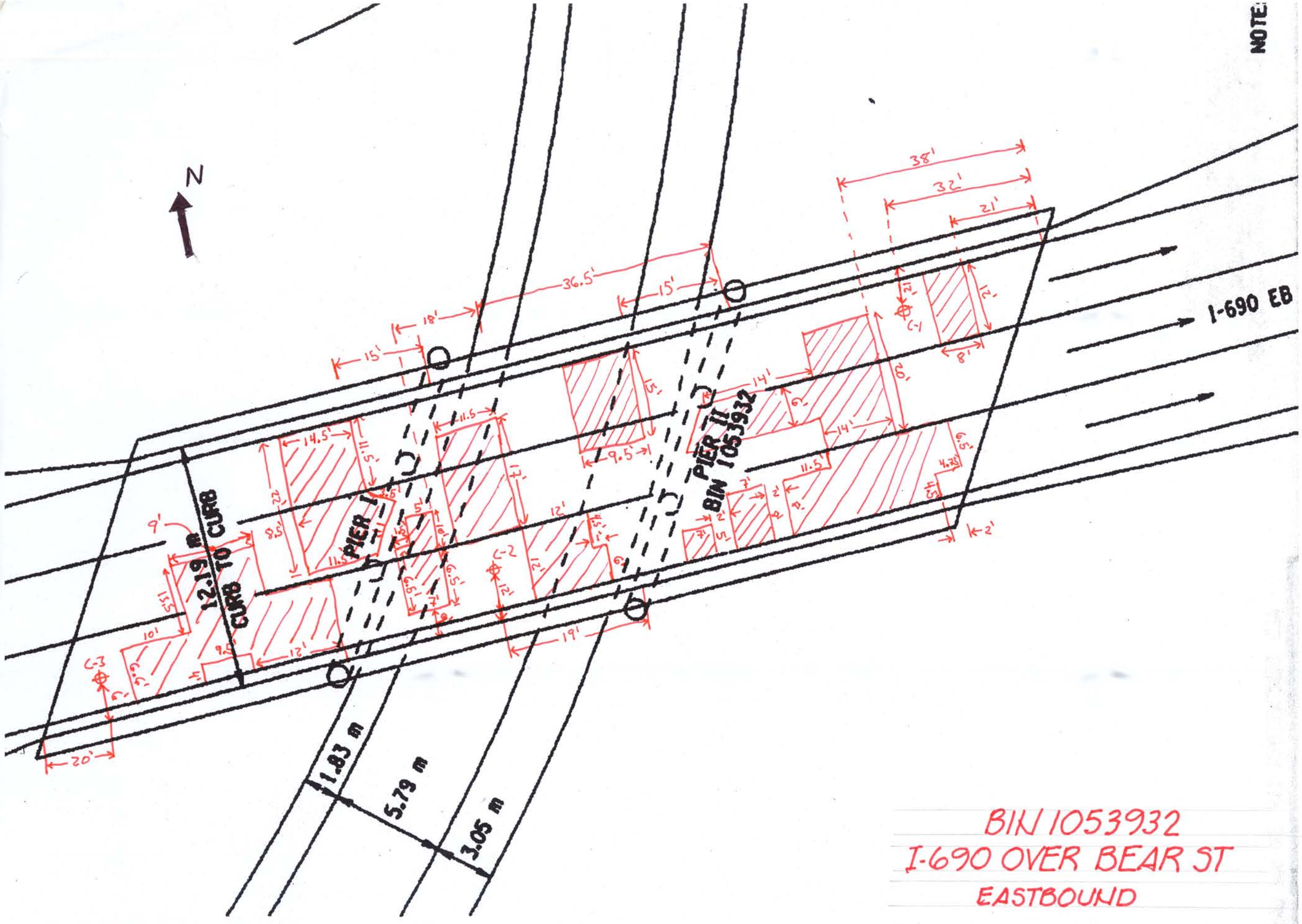

LEGEND

- CORE LOCATION (C-X)
- PHOTO LOCATION (XX)
- DELAMINATION
- SPALLING
- CRACK
- MAP CRACKING
- MOISTURE

BIN 1053932
I-690 OVER BEAR ST
EASTBOUND

DRAFTED BY _____ ESTIMATED BY _____ CHECKED BY _____

DESIGNED BY _____ MANAGER _____

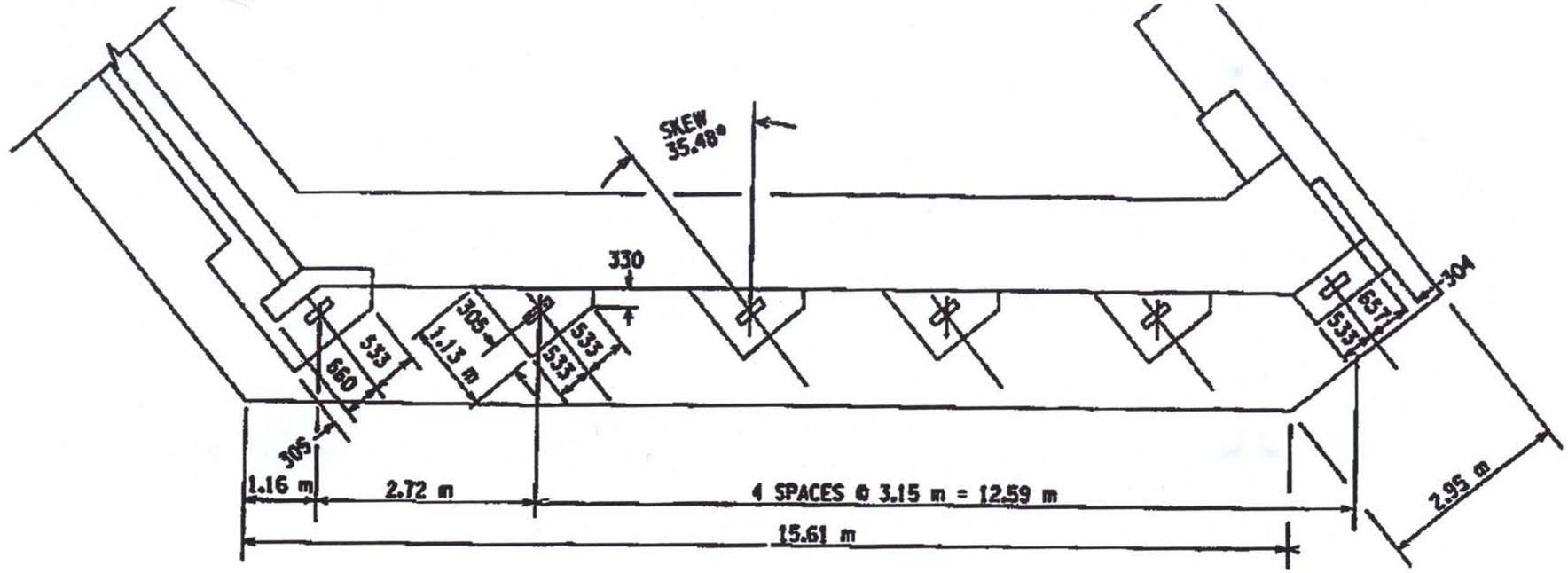

PLAN

P-6 P-5 P-4 P-3 P-2 P-1

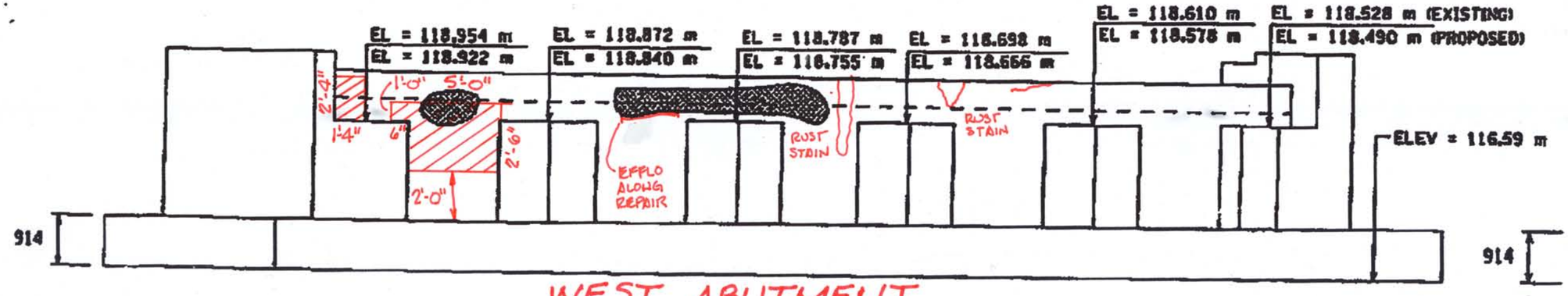

WEST ABUTMENT

ELEVATION

BIN 1053932
EASTBOUND BRIDGE



LEGEND

- CORE LOCATION
- PHOTO LOCATION
- DELAMINATION
- SPALLING
- CRACK
- MAP CRACKING
- MOISTURE

P-6 P-5 P-4 P-3 P-2 P-1

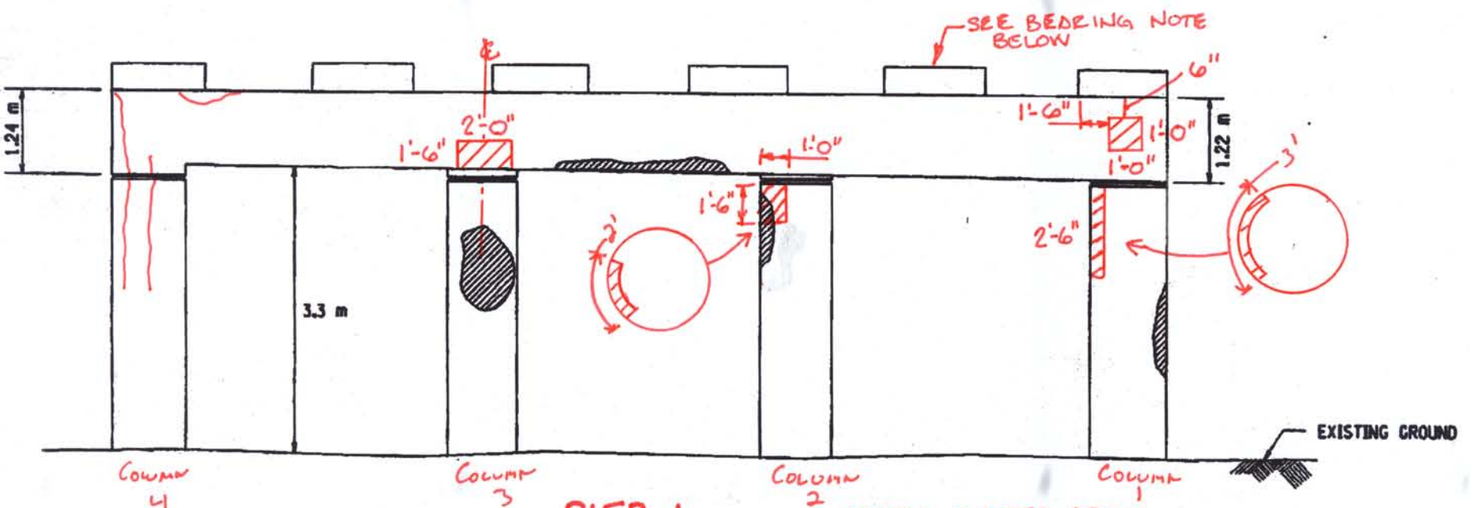

PIER 1
(END FACE)
FACING WEST

METAL GUTTER ABOVE PIER NOT FUNCTIONAL BOTTOM IS RUSTED THRU AND HANGERS ARE RUSTED OUT.

P-1 P-2 P-3 P-4 P-5 P-6

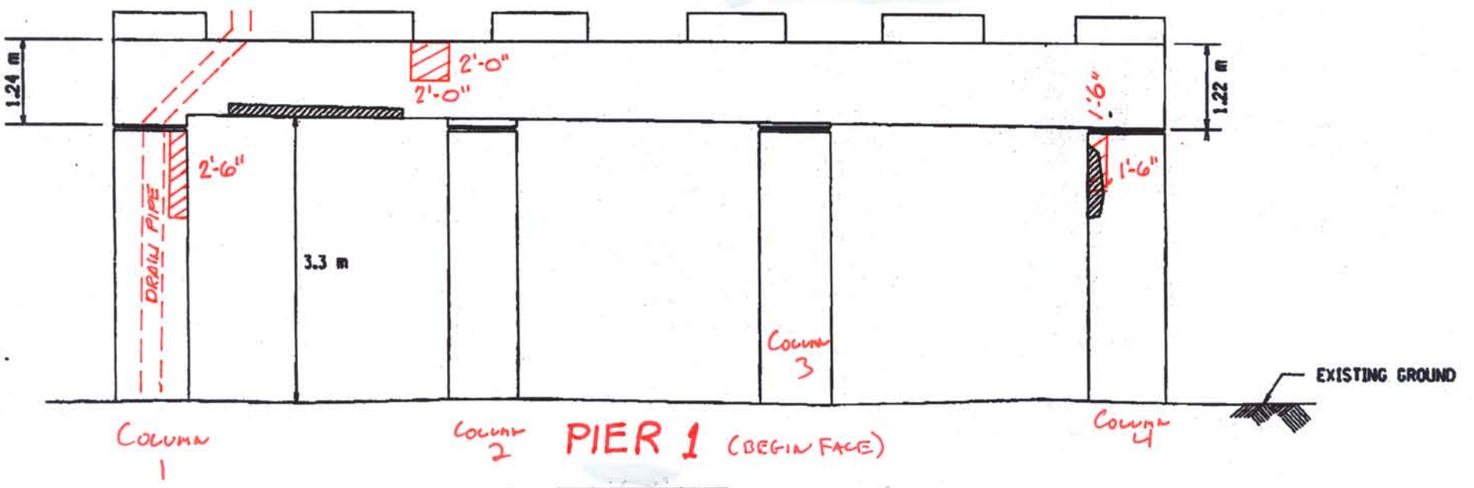

PIER 1 (BEGIN FACE)
FACING EAST

LEGEND

- CORE LOCATION
- PHOTO LOCATION
- DELAMINATION
- SPALLING
- CRACK
- MAP CRACKING
- MOISTURE

BEARING NOTE
VISUAL INSPECTION INDICATES, A CORNER OF THE BEARING BASE PLATE HANGS OVER THE CANT STRIP EDGE OF THE PIER CAP.

BIN 1053932

P-6 P-5 P-4 P-3 P-2 P-1

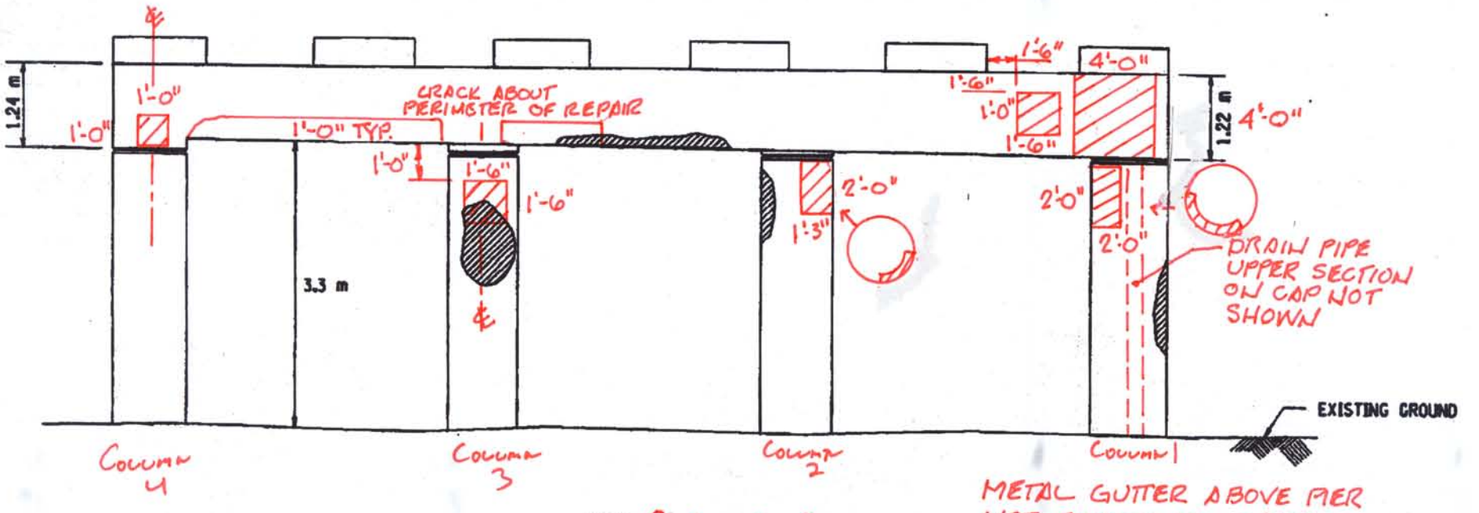

PIER 2 (END FACE)
FACING WEST

METAL GUTTER ABOVE PIER NOT FUNCTIONAL. INVERT RUSTED THRU AND HANGERS HAVE RUSTED THRU.

P-1 P-2 P-3 P-4 P-5 P-6

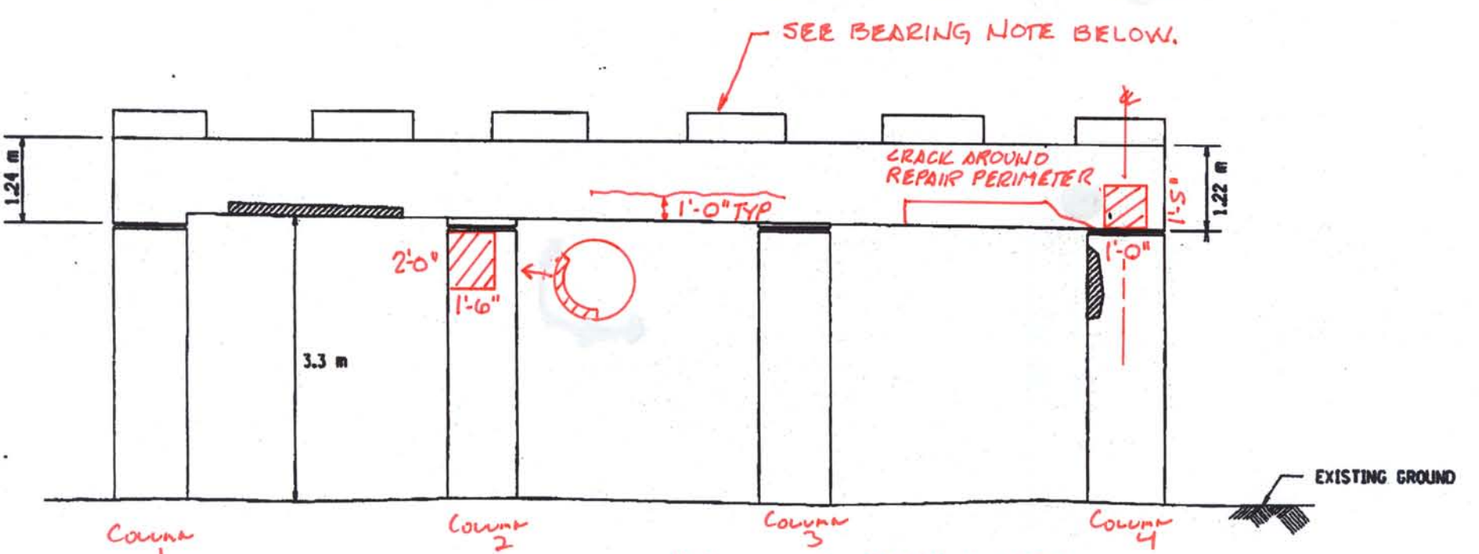

PIER 2 (BEG-IN FACE)
FACING EAST

BEARING NOTE

VISUAL INSPECTION INDICATES A CORNER OF THE BEARING BASE PLATE HANGS OVER THE CANT STRIP EDGE OF THE PIER CAP.

LEGEND

- CORE LOCATION
- PHOTO LOCATION
- DELAMINATION
- SPALLING
- CRACK
- MAP CRACKING
- MOISTURE

BIN 1053932

DRAFTED BY _____

ESTIMATED BY _____

CHECKED BY _____

DESIGNED BY _____

SUB MANAGER _____

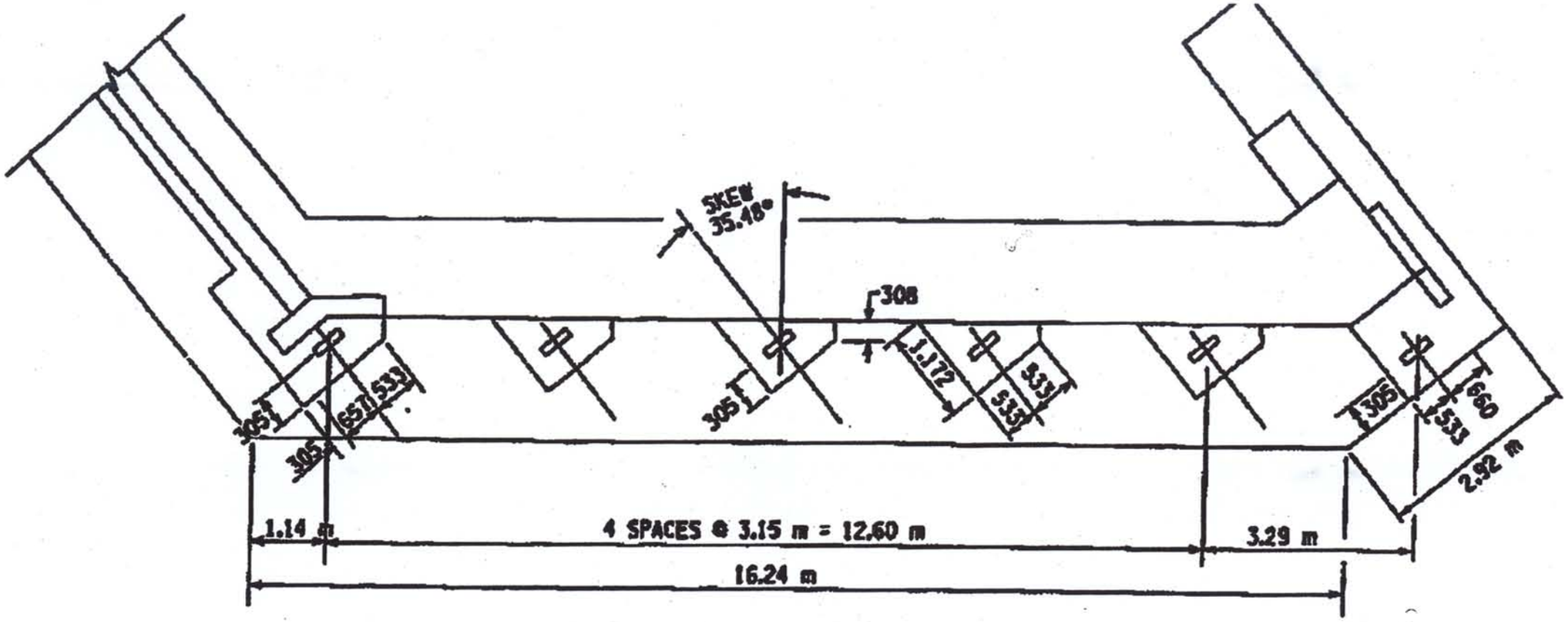

PLAN

BIN PLATE IS NOT LEGIBLE.

LEGEND

- CORE LOCATION
- PHOTO LOCATION
- DELAMINATION
- SPALLING
- CRACK
- MAP CRACKING
- MOISTURE

P-1 P-2 P-3 P-4 P-5 P-6

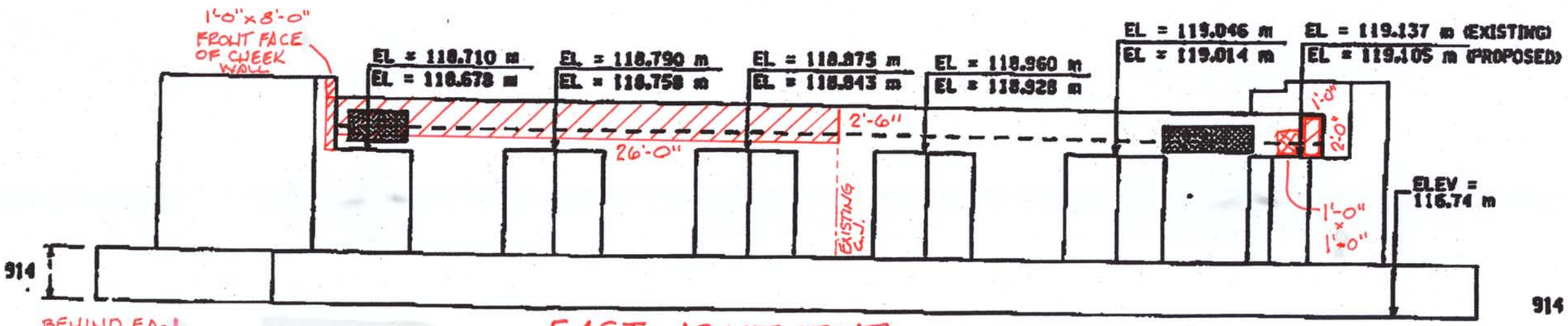

BEHIND EA-1 BACKWALL HAS A LARGE SPALL ABOUT TO FALL

THE TOTAL AREA HAS MULTIPLE CRACKS AND RUST STAIN.

EAST ABUTMENT

ELEVATION

BIN 1053932
EASTBOUND BRIDGE



IN-DEPTH PHOTO DOCUMENTATION

C&S Engineers, Inc.
499 Col. Eileen Collins Blvd.
Syracuse, New York 13212
Phone: (315) 455-2000
Fax: (315) 455-9667
www.cscos.com

I-690 EB over Bear St Extension- BIN 1053932



DESCRIPTION: WEST ABUTMENT – BACKWALL – BETWEEN PEDESTALS 3 AND 4 – RUST STAIN

PHOTO 1



DESCRIPTION: WEST ABUTMENT – BACKWALL – BETWEEN PEDESTALS 4 AND 5 – EFFLORESCENCE ALONG REPAIR

PHOTO 2

ID Numbers in Photo's are for field use only

C&S Engineers, Inc.
499 Col. Eileen Collins Blvd.
Syracuse, New York 13212
Phone: (315) 455-2000
Fax: (315) 455-9667
www.cscos.com

I-690 EB over Bear St Extension- BIN 1053932



DESCRIPTION: WEST ABUTMENT – BACKWALL – BETWEEN PEDESTALS 5 AND 6 – DELAMINATED CONCRETE

PHOTO 3



DESCRIPTION: WEST ABUTMENT – BACKWALL – BETWEEN PEDESTAL 6 AND CHEEKWALL – DELAMINATED CONCRETE

PHOTO 4

ID Numbers in Photo's are for field use only

C&S Engineers, Inc.
499 Col. Eileen Collins Blvd.
Syracuse, New York 13212
Phone: (315) 455-2000
Fax: (315) 455-9667
www.cscos.com

I-690 EB over Bear St Extension- BIN 1053932



DESCRIPTION: WEST ABUTMENT – PEDESTAL 2 – TYPICAL CONCRETE

PHOTO 5



DESCRIPTION: WEST ABUTMENT – BEARING 4– TYPICAL

PHOTO 6

ID Numbers in Photo's are for field use only

C&S Engineers, Inc.
499 Col. Eileen Collins Blvd.
Syracuse, New York 13212
Phone: (315) 455-2000
Fax: (315) 455-9667
www.cscos.com

I-690 EB over Bear St Extension- BIN 1053932



DESCRIPTION: PIER 1 – COLUMN 1 – EAST FACE – DELAMINATED CONCRETE

PHOTO 7



DESCRIPTION: PIER 1 – EAST FACE – CAP BEAM – BETWEEN PEDESTALS 2 AND 3 – DELAMINATED CONCRETE

PHOTO 8

ID Numbers in Photo's are for field use only

C&S Engineers, Inc.
499 Col. Eileen Collins Blvd.
Syracuse, New York 13212
Phone: (315) 455-2000
Fax: (315) 455-9667
www.cscos.com

I-690 EB over Bear St Extension- BIN 1053932



DESCRIPTION: PIER 1 – COLUMN 4 – EAST FACE – DELAMINATED CONCRETE

PHOTO 9

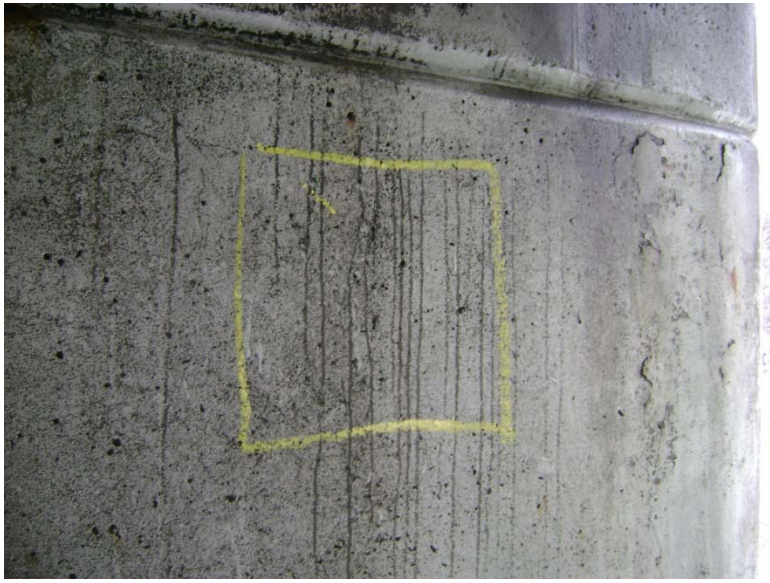

DESCRIPTION: PIER 1 – WEST FACE – CAP BEAM – BELOW PEDESTAL 1 – DELAMINATED CONCRETE

PHOTO 10

ID Numbers in Photo's are for field use only

C&S Engineers, Inc.
499 Col. Eileen Collins Blvd.
Syracuse, New York 13212
Phone: (315) 455-2000
Fax: (315) 455-9667
www.cscos.com

I-690 EB over Bear St Extension- BIN 1053932



DESCRIPTION: PIER 1 – WEST FACE – CAP BEAM – BELOW PEDESTAL 4 – DELAMINATED CONCRETE

PHOTO 11



DESCRIPTION: PIER 1 – PEDESTAL 5 – TYPICAL CONCRETE

PHOTO 12

C&S Engineers, Inc.
499 Col. Eileen Collins Blvd.
Syracuse, New York 13212
Phone: (315) 455-2000
Fax: (315) 455-9667
www.cscos.com

I-690 EB over Bear St Extension- BIN 1053932



DESCRIPTION: PIER 1 – BEARING 5 - TYPICAL

PHOTO 13



DESCRIPTION: PIER 2 – WEST FACE – COLUMN 2 – DELAMINATED CONCRETE AND MAP CRACKING

PHOTO 14

C&S Engineers, Inc.
499 Col. Eileen Collins Blvd.
Syracuse, New York 13212
Phone: (315) 455-2000
Fax: (315) 455-9667
www.cscos.com

I-690 EB over Bear St Extension- BIN 1053932



DESCRIPTION: PIER 2 – EAST FACE – CAP BEAM – BETWEEN COLUMNS 3 AND 4 – CRACKS AND DELAMINATED CONCRETE

PHOTO 15



DESCRIPTION: PIER 2 – EAST FACE – CAP BEAM – BELOW PEDESTAL 1 – DELAMINATED CONCRETE

PHOTO 16

C&S Engineers, Inc.
499 Col. Eileen Collins Blvd.
Syracuse, New York 13212
Phone: (315) 455-2000
Fax: (315) 455-9667
www.cscos.com

I-690 EB over Bear St Extension- BIN 1053932



DESCRIPTION: PIER 2 – EAST FACE – CAP BEAM – BELOW PEDESTAL 2 – DELAMINATED CONCRETE

PHOTO 17



DESCRIPTION: PIER 2 – EAST FACE – CAP BEAM – BETWEEN COLUMNS 3 AND 4 – CRACKED ON LOWER EDGE OF BEAM, DELAMINATED ON COLUMN 3

PHOTO 18

ID Numbers in Photo's are for field use only

C&S Engineers, Inc.
499 Col. Eileen Collins Blvd.
Syracuse, New York 13212
Phone: (315) 455-2000
Fax: (315) 455-9667
www.cscos.com

I-690 EB over Bear St Extension- BIN 1053932



DESCRIPTION: PIER 2 – EAST FACE – COLUMN 2 – DELAMINATED CONCRETE AND MAP CRACKING

PHOTO 19



DESCRIPTION: STEEL – ABOVE PIER 2 – PEDESTAL 4 – HOLE IN STEEL

PHOTO 20

ID Numbers in Photo's are for field use only

C&S Engineers, Inc.
499 Col. Eileen Collins Blvd.
Syracuse, New York 13212
Phone: (315) 455-2000
Fax: (315) 455-9667
www.cscos.com

I-690 EB over Bear St Extension- BIN 1053932



DESCRIPTION: STEEL – ABOVE PIER 2 – PEDESTAL 2 – HOLE IN FLANGE

PHOTO 21



DESCRIPTION: ABOVE PIER 2 – BETWEEN PEDESTALS 5 AND 6 – METAL GUTTER HAD BROKEN LOOSE

PHOTO 22

C&S Engineers, Inc.
499 Col. Eileen Collins Blvd.
Syracuse, New York 13212
Phone: (315) 455-2000
Fax: (315) 455-9667
www.cscos.com

I-690 EB over Bear St Extension- BIN 1053932



DESCRIPTION: PIER 2 – EAST FACE – PEDESTAL 5 – TYPICAL CONCRETE

PHOTO 23



DESCRIPTION: PIER 2 – WEST FACE – BEARING 5 – TYPICAL

PHOTO 24

ID Numbers in Photo's are for field use only

C&S Engineers, Inc.
499 Col. Eileen Collins Blvd.
Syracuse, New York 13212
Phone: (315) 455-2000
Fax: (315) 455-9667
www.cscos.com

I-690 EB over Bear St Extension- BIN 1053932



DESCRIPTION: EAST ABUTMENT – BACKWALL – BETWEEN PEDESTALS 1 AND 2 – DEALMINATED , RUST STAINED, SPALLED CONCRETE – TYPICAL FROM PEDESTALS 1 TO 4

PHOTO 25



DESCRIPTION: EAST ABUTMENT – NORTH CHEEKWALL – DELAMINATED CONCRETE

PHOTO 26

ID Numbers in Photo's are for field use only

C&S Engineers, Inc.
499 Col. Eileen Collins Blvd.
Syracuse, New York 13212
Phone: (315) 455-2000
Fax: (315) 455-9667
www.cscos.com

I-690 EB over Bear St Extension- BIN 1053932



DESCRIPTION: EAST ABUTMENT – BACKWALL – BEHIND PEDESTAL 6 – DELAMINATED CONCRETE

PHOTO 27



DESCRIPTION: EAST ABUTMENT – PEDESTAL 3 – TYPICAL CONCRETE

PHOTO 28

C&S Engineers, Inc.
499 Col. Eileen Collins Blvd.
Syracuse, New York 13212
Phone: (315) 455-2000
Fax: (315) 455-9667
www.cscos.com

I-690 EB over Bear St Extension- BIN 1053932

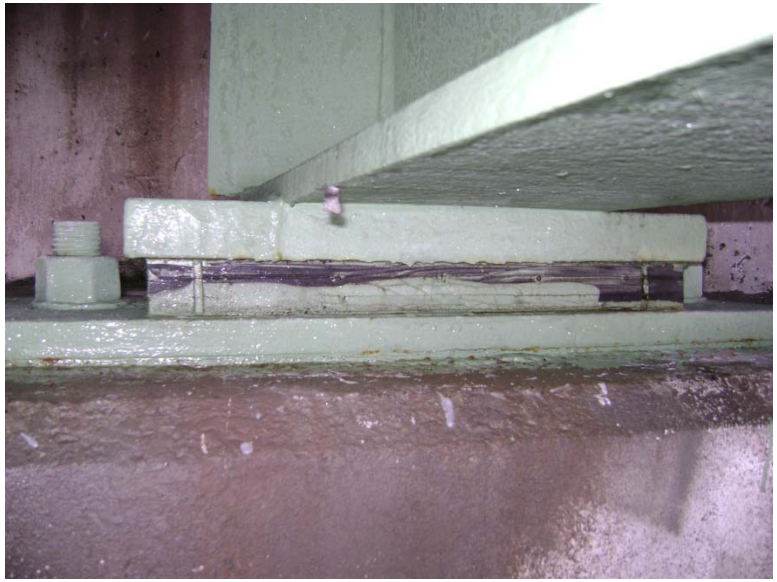

DESCRIPTION: EAST ABUTMENT – BEARING 4 - TYPICAL

PHOTO 29



DESCRIPTION: EAST ABUTMENT – BEHIND PEDESTAL 1 – SPALLED CONCRETE

PHOTO 30

C&S Engineers, Inc.
499 Col. Eileen Collins Blvd.
Syracuse, New York 13212
Phone: (315) 455-2000
Fax: (315) 455-9667
www.cscos.com

I-690 EB over Bear St Extension- BIN 1053932



DESCRIPTION: SOUTHEAST WINGWALL – FACING NORTHEAST – TYPICAL

PHOTO 31



DESCRIPTION: WEST ABUTMENT – FACING WEST

PHOTO 32

ID Numbers in Photo's are for field use only

C&S Engineers, Inc.
499 Col. Eileen Collins Blvd.
Syracuse, New York 13212
Phone: (315) 455-2000
Fax: (315) 455-9667
www.cscos.com

I-690 EB over Bear St Extension- BIN 1053932



DESCRIPTION: PIER 1 – FACING WEST

PHOTO 33



DESCRIPTION: PIER 2 – FACING WEST

PHOTO 34

ID Numbers in Photo's are for field use only

C&S Engineers, Inc.
499 Col. Eileen Collins Blvd.
Syracuse, New York 13212
Phone: (315) 455-2000
Fax: (315) 455-9667
www.cscos.com

I-690 EB over Bear St Extension- BIN 1053932



DESCRIPTION: EAST ABUTMENT – FACING EAST

PHOTO 35



DESCRIPTION: BRIDGE DECK – BEGINNING ABUTMENT – FACING EAST

PHOTO 36

ID Numbers in Photo's are for field use only

C&S Engineers, Inc.
499 Col. Eileen Collins Blvd.
Syracuse, New York 13212
Phone: (315) 455-2000
Fax: (315) 455-9667
www.cscos.com

I-690 EB over Bear St Extension- BIN 1053932



DESCRIPTION: ELEVATION – FACING SOUTH

PHOTO 37

DESCRIPTION:

PHOTO

ID Numbers in Photo's are for field use only

PHOTO LOG

LEGEND

(XX) PHOTO LOCATION

(XX) HIDDEN PHOTO LOCATION

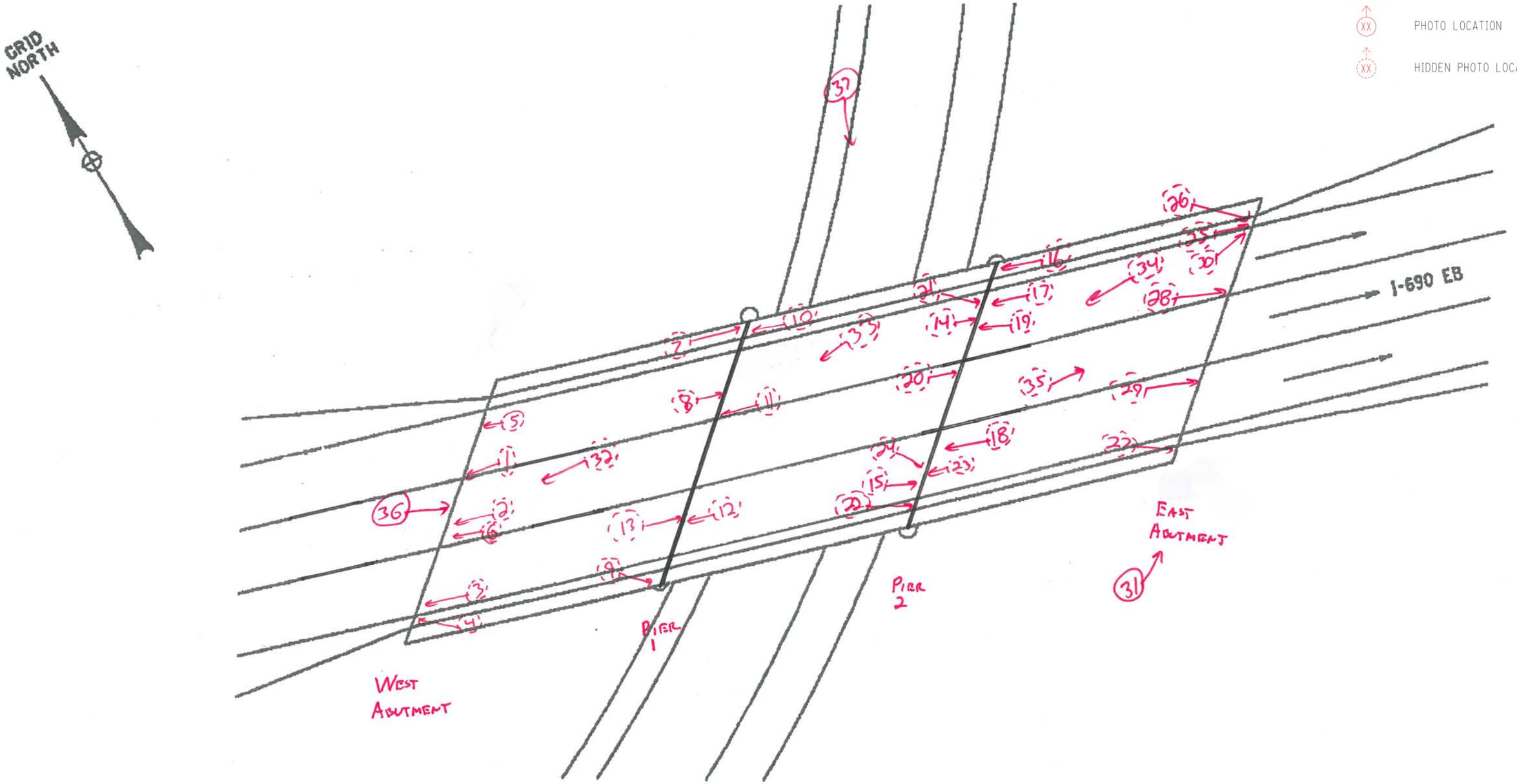

BIN 1053932
I-690 EB OVER
BEAR STREET EXTENSION

ASBESTOS DOCUMENTATION

ASBESTOS DOCUMENTATION FROM WATTS ARCHITECTURE & ENGINEERING, INC.

(WILL REPLACE BIN FOLDER ASBESTOS REPORT UPON COMPLETION)

ATHENICA
ENVIRONMENTAL SERVICES INC.
Tel (718) 784-7490
Fax (718) 784-4085

BULK (NOB) ASBESTOS ANALYSIS BY POLARIZED LIGHT MICROSCOPY AND TRANSMISSION ELECTRON MICROSCOPY

CLIENT: NYSDOT # 3
LABORATORY ID #: 05-05-126
DATES OF ANALYSIS: 06/01/05

PROJECT#: 1053932
ANALYT. METHODOLOGIES: ELAP 198.1, ELAP 198.4
DATE OF REPORT: 06/01/05

LABORATORY RESULTS

CLIENT #	LAB. ID #	LOCATION	%ORG	%ASI	%AII	PLM RESULTS	TYPE OF ASBEST.	TEM RESULTS	TYPE OF ASBEST.	POSIT. / NEGAT.
01	05-05-126-01	Steel Paint Coat, G2, Span1, Beg Rt. Web .5m from begin	37.87	9.56	52.57	**ND**	NA	**Trace**	Anthoph.	**Negat.**
02	05-05-126-02	Steel Paint Coat, G5, Span1, Beg Rt. Web 1m from begin	36.25	15.27	48.47	**ND**	NA	**ND**	NA	**Negat.**
03	05-05-126-03	Steel Paint Coat, G6, Span1, Beg Lt. Web 1m from begin	44.94	6.18	48.88	**ND**	NA	**ND**	NA	**Negat.**

ANALYST
E. Sioukri

LABORATORY DIRECTOR
Spiro Dongaris

LABORATORY CERTIFICATION NUMBERS: NVLAP 101958, ELAP 10955

- Athenica Environmental Services Inc. (AES), is responsible only for information pertaining to samples taken by its employees.
- Samples will be stored for sixty (60) days. AES Inc., should be notified within this time frame for a true duplicate analysis.
- The report relates only to items tested. This report must not be used to claim product endorsement by NVLAP or any other agency of the U.S. Government. Test reports may not be reproduced except in full and with prior approval of AES Inc.
- The liability of Athenica Environmental Services Inc. with respect to the services charged, shall in no event exceed the amount of the invoice.

3
3

ATHENICA
ENVIRONMENTAL SERVICES INC.
45-09 GREENPOINT AVENUE
LONG ISLAND CITY, NY 11104
Tel. (718) 784-7490
Fax. (718) 784-4085

PROJECT NO. (ATHENICA FILE#) C003314

METHOD OF SHIPMENT U.S. MAIL

NUMBER OF SAMPLES 3

SITE BIN # 1053932

DATE 05/23/2005

INSPECTOR Gary W Cook

TYPE OF ANALYSIS REQUESTED [ ] PLM [X] NOB-PLM [X] NOB-TEM [ ] OTHERS

TURNAROUND TIME [ ] 6 HRS [ ] 12 HRS [ ] 24 HRS [X] OTHER HRS

COMMENTS ATT: CHRISTOPHER ANDERSON
333 E. WASHINGTON ST. SYRACUSE, N.Y. 13202

HOM. AREA	SAMLPLE #	SAMPLE DESCRIPTION	SAMPLE LOCATION	FIELD COMMENTS	LABORATORY RESULTS PLM	PLM-NOB	TEM-NOB
1053932	01	STEEL PAINT COAT	G2, Span 1, Beg Rt	Web, .5m from Beg			
1053932	02	"	G5, Span 1, Beg Rt	Web, 1m from Beg			
1053932	03	"	G6, Span 1, Beg Lt	Web, 1m from Beg			

TRANSMITTAL OF RESULTS :
[X] STANDARD
[ ] TELEPHONE RESULTS TO
[ ] FAX RESULTS TO

TELEPHONE # : (315) 428-4628
FAX # :

BATCH # : 05-05-126

CHAIN OF CUSTODY RECORD

RELINQUISHED BY :	Gary W Cook	DATE :	05/26/2005	TIME :	8:20AM
RECEIVED BY :	[illegible]	DATE :	5/31/2005	TIME :	
ANALYST :		DATE :	6/1/2005	TIME :	

LABORATORY ACCREDITATION :
NVLAP# 101958 ELAP# 10955

NEW YORK STATE
DEPARTMENT OF TRANSPORTATION
D031085 P.I.N 3501.60

LEVEL 1 LOAD RATING
B.I.N. 1053932
I-690 Eastbound over Bear Street Extension

LOAD RATING SUMMARY TABLE (LOAD FACTOR)					
CONTROLLING MEMBER	**CONTROLLING PARAMETER**	**LIVE LOAD**	**LIVE LOAD TYPE**	**INVENTORY RATING**	**OPERATING RATING**
(S1/ G2) INTERIOR GIRDER	SERVICE	HS20-44	Axle Load	HS 32.38 (58.30 TONS)	HS 54.10 (97.36 TONS)
(S1/ G2) INTERIOR GIRDER	SERVICE	ALTERNATE MILITARY LOADING	Axle Load	1.827 (43.84 TONS)	3.051 (73.22 TONS)

DOES NOT INCLUDE FUTURE WEARING COURSE

ANALYSIS METHOD:LOAD FACTOR

RECOMMENDED POSTING AS-IS CONDITION: _____ Tons __X__ None

CALCULATED BY:

STATE OF NEW YORK CHARLES P. BROOKS II 089275 LICENSED PROFESSIONAL ENGINEER

DATE: 5/13/14

QUALITY ASSURANCE BY:

STATE OF NEW YORK PAUL F. BYRNE 055928 LICENSED PROFESSIONAL ENGINEER

DATE: 5/23/14

C&S COMPANIES

499 Col. Eileen Collins Blvd.
Syracuse, NY 13212
phone 315-455-2000
fax 315-455-9667
www.cscos.com

ENGINEERS
DESIGN BUILD
TECHNICAL RESOURCES
OPERATIONS

C&S Companies

C&S Engineers, Inc.
Syracuse Hancock International Airport
Syracuse, NY 13212
phone 315-455-2000
fax 315-455-9667
www.cscos.com

TECHNICAL MEMORANDUM

TO: FILE (190.514.001)

FROM: JESSICA S. BAUER, P.E.
NYSPE 084915

DATE: FEBRUARY 5, 2014

C&S PROJECT NO.: 190.514.001

RE: SEISMIC ASSESSMENT SUMMARY
NEW YORK STATE DEPARTMENT OF TRANSPORTATION
D031085; PIN 3501.60; I-81

BIN: 1053932 Seismic Assessment

This memorandum summarizes the seismic assessment conducted for BIN 1053932 as part of the Interstate 81 Project in Syracuse, NY. The purpose of the assessment is to determine if seismic retrofits are warranted at the superstructure to substructure connection, and if further seismic evaluation of the structure is required. This memorandum will give the assessment results, retrofits required and recommendations for further seismic evaluation of the structure.

ASSESSMENT PROCEDURE

The seismic assessment was performed in accordance with the FHWA Seismic Retrofitting Manual for Highway Structures: Part 1 - Bridges, January 2006. As per the referenced manual, seismic assessment was performed for both lower level and upper level earthquake ground motion. The lower level earthquake ground motion has a reasonable likelihood of occurrence within the life of the bridge (50% probability of exceedance within a 75 year bridge life). The upper level earthquake ground motion has a finite likelihood of occurrence within the life of the bridge (7% probability of exceedance within a 75 year bridge life).

Values for the spectral acceleration for the Syracuse area used in the assessment are as follows:

- Lower Level Earthquake Ground Motion for a Short Period (0.2 seconds): $S_S = 0.0251$
- Lower Level Earthquake Ground Motion for a Long Period (1.0 seconds): $S_1 = 0.0076$
- Upper Level Earthquake Ground Motion for a Short Period (0.2 seconds): $S_S = 0.139$
- Upper Level Earthquake Ground Motion for a Long Period (1.0 seconds): $S_1 = 0.047$

These values are considered constant and are the same for all seismic assessments of bridges in the Syracuse area.

The Site Class is based on the soil conditions at the bridge location. It was determined that this parameter has little effect on the results of the seismic assessment because the spectral

You created this PDF from an application that is not licensed to print to novaPDF printer (http://www.novapdf.com)

acceleration values for the Syracuse area are small. Based on this, a site class of D was used for all seismic assessments of bridges in the Syracuse area.

Bridge parameters used in the seismic assessment were retrieved from the record drawings and WinBolts data.

The seismic assessment takes into account the anticipated service life, importance, and the seismic exposure of the bridge to determine a seismic retrofit category (SRC). The SRC is then used to determine seismic evaluation methods and retrofit measures. There are four SRCs, A through D. Seismic retrofit category A is the lowest category; bridges in this category do not require retrofits or further seismic evaluation. Seismic retrofit category D is the highest category; bridges in this category requiring the most rigorous seismic evaluations and retrofits.

ASSESSMENT RESULTS

The SRC for the bridge is "**C**" for lower level earthquake ground motion and "**B**" for upper level earthquake ground motion.

RETROFITS REQUIRED

Bearing replacements are not required at the abutments and piers. Seat width improvements are required at the begin abutment. Additional retrofits may be required if further seismic evaluation is needed.

RECOMMENDATIONS FOR FURTHER SEISMIC EVALUATION

For the lower level earthquake ground motion, it is recommended that capacity/demand ratios for bridge components are calculated as per Section 5.4 of the referenced manual. For the upper level earthquake ground motion, it is recommended that the capacities of the bearings are checked as per Section 5.2 of the referenced manual.

Retrofit cost estimates will be provided after any further required seismic evaluations are completed.

You created this PDF from an application that is not licensed to print to novaPDF printer (http://www.novapdf.com)

ENGINEERS
DESIGN BUILD
TECHNICAL RESOURCES
OPERATIONS

C&S Companies

C&S Engineers, Inc.
Syracuse Hancock International Airport
Syracuse, NY 13212
phone 315-455-2000
fax 315-455-9667
www.cscos.com

TECHNICAL MEMORANDUM

TO: **FILE (190.514.001)**

FROM: **PAUL BYRNE, P.E.**
NYSPE 055928

DATE: **JUNE 4, 2014**

C&S PROJECT NO.: 190.514.001

RE: **NEW YORK STATE DEPARTMENT OF TRANSPORTATION**
D031085; PIN 3501.60; I-81 Opportunities, BIN 1053932 Fatigue Evaluation

---

This memorandum documents a fatigue evaluation conducted for the existing Interstate 81 Viaduct Project. Existing structures with AASHTO Category D, E, and E' fatigue-prone details require 100% hands-on inspection unless proven to be exempt. The purpose of the evaluation is to assess the remaining life of fatigue-prone components.

EVALUATION PROCEDURES

The fatigue evaluation was performed in accordance with the AASHTO Guide Specification for Fatigue Evaluations of Existing Steel Bridges, 1990. Fatigue-prone welds identified in the biennial inspection reports were located on record drawings and confirmed visually in the field. Additional information concerning fatigue-prone welds located in BIN folders was also obtained and reviewed prior to inspection.

EVALUATION RESULTS

The results of the fatigue evaluation of the existing bridge are shown below. The remaining safe fatigue life of the Interior Girder fatigue components for all spans have been **exhausted**.

Fatigue Detail Location	Remaining Safe Fatigue Life (Years)	Remaining Mean Fatigue Life (Years)
Span 1, Exterior Girder G7, End of Bottom Flange Cover Plate	Infinite	Infinite
Span 1, Interior Girders, End of Bottom Flange Cover Plate	-21.56	3.88
Span 1, Exterior Girder G9, End of Bottom Flange Cover Plate	81.94	513.16
Span 2, Exterior Girder G10, End of Bottom Flange Cover Plate	39.10	302.35
Span 2, Interior Girders, End of Bottom Flange Cover Plate	-21.56	3.88

Fatigue Detail Location	Remaining Safe Fatigue Life (Years)	Remaining Mean Fatigue Life (Years)
Span 2, Exterior Girder G12, End of Bottom Flange Cover Plate	41.46	313.97
Span 3, Exterior Girder G13, End of Bottom Flange Cover Plate	Infinite	Infinite
Span 3, Interior Girders, End of Bottom Flange Cover Plate	-18.54	18.74
Span 3, Exterior Girder G15, End of Bottom Flange Cover Plate	Infinite	Infinite

E. Recommendations

The purpose of this deck evaluation is to document and determine existing conditions of the deck. It will be used as a tool for developing the scope of work and cost estimates for the development and comparison of alternatives for the overall project.

The total damaged area is approximately 28% of the total deck area. Due to the age, condition and chloride-ion content of the bridge deck concrete, the bridge deck should be rehabilitated or replaced to meet current design standards and to mitigate excessive future maintenance costs.

Option 1 – Scarify and Bridge Deck Overlay
The maximum service life this option would provide is 25 years. The design life of this project is 30 years (ETC + 30). This option does not meet the project objective of obtaining 30+ years of service life.

Option 2 – Bridge Deck Rehabilitation with 100% Deep Removal
This option will involve partial depth reconstruction with top mat rebar exposure of the entire bridge deck to remove the chloride contaminated concrete (100% deep removal). The existing bridge deck thickness is 9 ¾" with nearly 4" of concrete cover over the top mat of reinforcing. The proposed partial depth reconstruction will provide the standard 9 ½" bridge deck thickness. The existing top mat of reinforcing bars will be removed and replaced to accommodate the standard 3" of concrete cover. The existing parapet wall and safety walk will be removed and replaced with single-slope concrete barrier. The existing deteriorated bridge joints will be replaced with armorless bridge joints. The Level 1 Load Rating for the final condition was found to be acceptable. This option would provide a service life of 35 years to the bridge deck. The construction cost of this option is $ 0.650 million.

Option 3 – Bridge Deck Replacement with Cast-In-Place Concrete

This option would involve the complete removal of the bridge deck, bridge deck joints, and parapet walls down to the existing steel girders. The bridge deck would be replaced with a new concrete deck, single-slope concrete barrier and new armorless bridge joints. The new bridge deck would be 9 ½" standard thickness as compared to the 9 ¾" existing thickness. The Level 1 Load Rating for the final condition was found to be acceptable. This option would provide a service life of 40 years to the bridge deck. The construction cost of this option is $ 0.776 million.

Option 4 – Bridge Deck Replacement with Pre-cast Concrete Deck Panels

This option will have the highest construction cost of all the options; however, traffic control costs may be lower due to the reduced construction time. Comparison of accelerated construction versus conventional construction is beyond the scope of work for this project at this time.

IN-DEPTH INSPECTION REPORT

D031085 P.I.N. 3501.60

B.I.N. 1053941

TEAM LEADER Andrew J. Fuller, P.E. 59848
NYSPE LICENSE #

ASSISTANT TEAM LEADER Jeffrey M. Reina, P.E.
ASSISTANT TEAM LEADER Logan Bessel
ASSISTANT TEAM LEADER Jerome Getter

FEATURE CARRIED I - 690 Westbound
FEATURE CROSSED Liberty Street

DATE FIELD WORK BEGAN January 9, 2014
DATE FIELD WORK COMPLETED January 9, 2014

TABLE OF CONTENTS

- TP 349 & 350
- IN-DEPTH CONDITION DOCUMENTATION
- IN-DEPTH PHOTO DOCUMENTATION
- ASBESTOS REPORT

TP 349 & TP 350

BRIDGE ELEMENT RATINGS

Inspection Date: 3/19/2012 RC: 33 BIN: 1053941

Bridge Ratings

Carried: 690I 690I33012013 Crossed: LIBERTY STREET CheckValue: 1,778,548,417

Inspection Agency: 10 - NYSDOT Type of Inspection: 1 - BIENNIAL
GTMS: 302 -- Steel - Stringer/Multi-Beam or Girder
POSTINGS: See Gen Rec Page 1 for Postings at time of inspection.
Further Investigation Needed: No
State Highway Number: 54-16 Milepoint: 7.74 AADT/Yr: 25733 / 2002
Orientation: 3 - East Political Unit: 2055 - City of SYRACUSE Year Built: 1968
Total Spans: 1 Ramp Bridge Attached To Span: NA BIN: NA
General Recommendation: 5 Computed Condition Rating: 5.172

Abutment Ratings:	**Beg Abut**	**End Abut**
Joint with Deck	8	5
Bearings, Bolts, Pads	4	4
Seats and Pedestals	6	6
Backwall	5	5
Stem (Breastwall)	5	5
Erosion or Scour	6	6
Footings	9	9
Piles	9	9
Recommendation	5	5

Wingwall Ratings:	**Beg Abut**	**End Abut**
Walls	5	5
Footings	9	9
Erosion or Scour	6	6
Piles	9	9

Channel Ratings:	**Channel**
Stream Alignment	8
Erosion and Scour	8
Waterway Opening	8
Bank Protection	8

Approach Ratings:	**Approaches**
Drainage	4
Embankment	5
Settlement	4
Erosion	5
Pavement	4
Guide Railing	5

Number of Flags Issued:

RED: 0 Yellow: 0 Safety: 0

Vulnerability Reviews Recommended: 1=Yes, 2=No, 3=NA, X=NotActive

Hydraulic: 3	Overload: X	Steel: 2
Collision: 2	Concrete: X	Seismic: X

Inspector's Signature: CheckValue: 1,778,548,417 Date: 3/19/2012

David Hann,PE () (Inspector ID:3000055)

Signed copy of this inspection report is available in the appropriate NYSDOT Regional Office

Reviewed By: Date: 5/24/2012

James R. Manning,PE () (QC ID:3000023)

Signed copy of this inspection report is available in the appropriate NYSDOT Regional Office

Inspection Date: 3/19/2012 RC: 33 BIN: 1053941

Span Ratings

Carried: 690I 690I33012013 Crossed: LIBERTY STREET CheckValue: 1,778,548,417

Deck Element Ratings:	**001**
Wearing Surface	4
Curbs	5
Sidewalks, Fascias	5
Railings, Parapets	3
Scuppers	8
Gratings	8
Median	8
Mono Deck Surface	5

Superstructure Ratings:	**001**
Structural Deck	5
Primary Members	6
Secondary Members	6
Paint	5
Joints	8
Recommendation	6

Pier Ratings:	**001**
Bearings, Bolts, Pads	8
Pedestals	8
Top of Cap or Beam	8
Stem Solid Pier	8
Cap Beam	8
Pier Columns	8
Footings	8
Erosion or Scour	8
Piles	8
Recommendation	8

Utility Ratings:	**001**
Lighting	4
Sign Structure	6
Utilities and Support	8

Field Notes:

Field Date	Arrival	Departure	Temp (C)	Temp (F)	Weather Conditions
3/19/2012	8:00:00 AM	12:00:00 PM		65	Sunny

IN-DEPTH CONDITION DOCUMENTATION

IN DEPTH INSPECTION REPORT

BIN 1053941

Visual Inspection

The bridge was built in 1968 with a major rehabilitation in 1984. During the 1984 rehabilitation project, miscellaneous concrete repairs were made to the abutments and piers under contract D500057. Superstructure repairs included painting structural steel, concrete bridge deck overlay, and deck joint replacement.

Cracks, spalls, and other field observations are shown on the plans. Below is a brief summary of conditions for each feature.

Superstructure

Deck – See Bridge Deck Evaluation Report

Steel – See Structural Steel Inspection Summary

Bearings – Bearing elements typically have rust scale, with the fascia bearings exhibiting heavy rust.

Substructure

West Abutment – The concrete backwall and pedestals contained minor isolated areas of delaminated concrete and cracking. The concrete stem beneath pedestals 1 and 2 had sections of delaminated concrete. There were heavy salt stains on the backwall, cheekwall, and bearing seats. The wingwall had minor surface and map cracks, with salt staining present.

East Abutment – The concrete backwall, stem, and pedestals contained minor isolated areas of delaminated concrete and cracking. The stem exhibited one section of delaminated concrete below pedestal 1. The backwall above pedestal 1 contained a patch that had started to spall. There were heavy salt and rust stains on the backwall, cheeckwall, and bearing seats. The Northeast cheekwall and wingwall had map cracking with salt stains along several crack lines with

salt and rust stains from the parapet joint. The joint material in the mid-wall appeared dry rotted and cracked.

STRUCTURAL STEEL INSPECTION SUMMARY

BIN 1053941

Special Emphasis Inspection Required

Non-Redundant/Fracture Critical Members – No

Pin and Hangers – No

Fatigue-Prone Welds – Yes

Non-Categorized Fatigue-Prone Details – No

Other (Specified in Text) – No

Special Emphasis Details

Cover plate welds: 100% Hands-on inspection performed.

Overall Steel Condition

The steel showed no sign of major deterioration. There were no isolated pockets of major section loss and no areas of concern were observed.

Paint

The paint is in good overall condition with minor rusting and flaking along the edges of the girder flanges.

Section Loss

Due to the age of the steel a blanket 5% section loss should be used in load rating.

105J41 - I 690 WB
OVER LIBERTY ST.

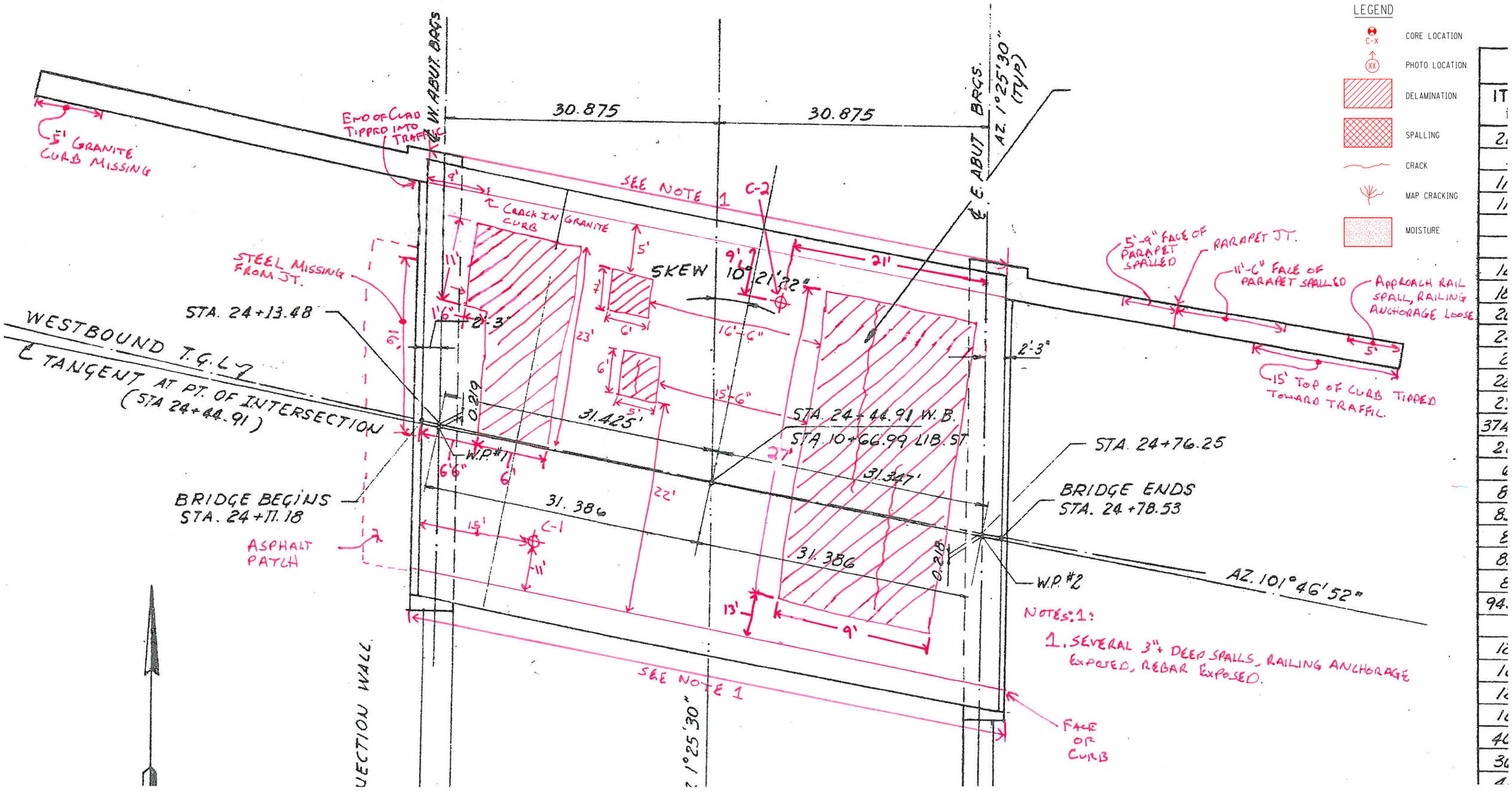

PLAN

Scale: 3/16" = 1'-0"

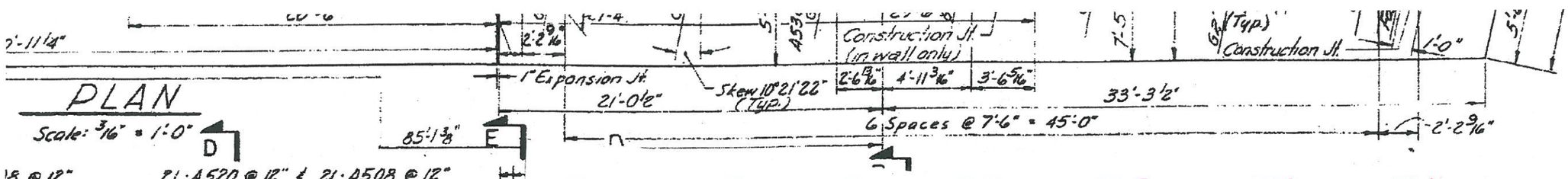

ANCHOR BOLT LOCATION (W.B.)

No Scale

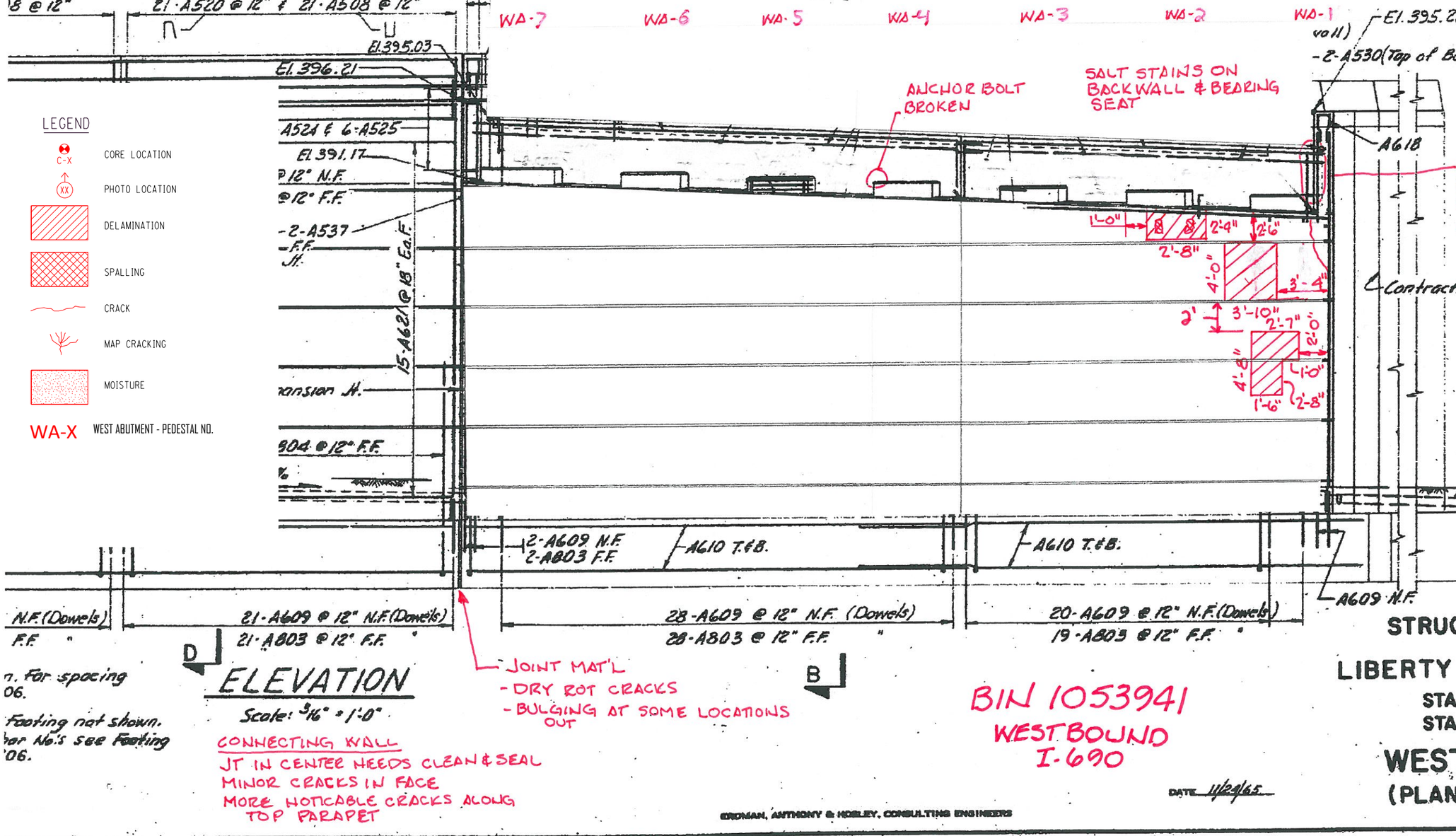

ELEVATION

Scale: 3/16" = 1'-0"

CONNECTING WALL
JT IN CENTER NEEDS CLEAN & SEAL
MINOR CRACKS IN FACE
MORE NOTICABLE CRACKS ALONG TOP PARAPET

LEGEND

- C-X — CORE LOCATION
- XX — PHOTO LOCATION
- DELAMINATION
- SPALLING
- CRACK
- MAP CRACKING
- MOISTURE
- WA-X — WEST ABUTMENT - PEDESTAL NO.

n. For spacing 06.

Footing not shown. ber No.'s see Footing 06.

BIN 1053941
WESTBOUND
I-690

DATE 11/29/65

ERDMAN, ANTHONY & KOBLEY, CONSULTING ENGINEERS

STRUCTURES 2A & 2B

LIBERTY STREET BRIDGES

STA. 24+44.91 W.B.
STA. 24+47.02 E.B.

WEST ABUTMENT

(PLAN & ELEVATIONS) DWG. NO. 204
TOTAL: 13

LEGEND

- CORE LOCATION (C-X)
- PHOTO LOCATION (XX)
- DELAMINATION
- SPALLING
- CRACK
- MAP CRACKING
- MOISTURE

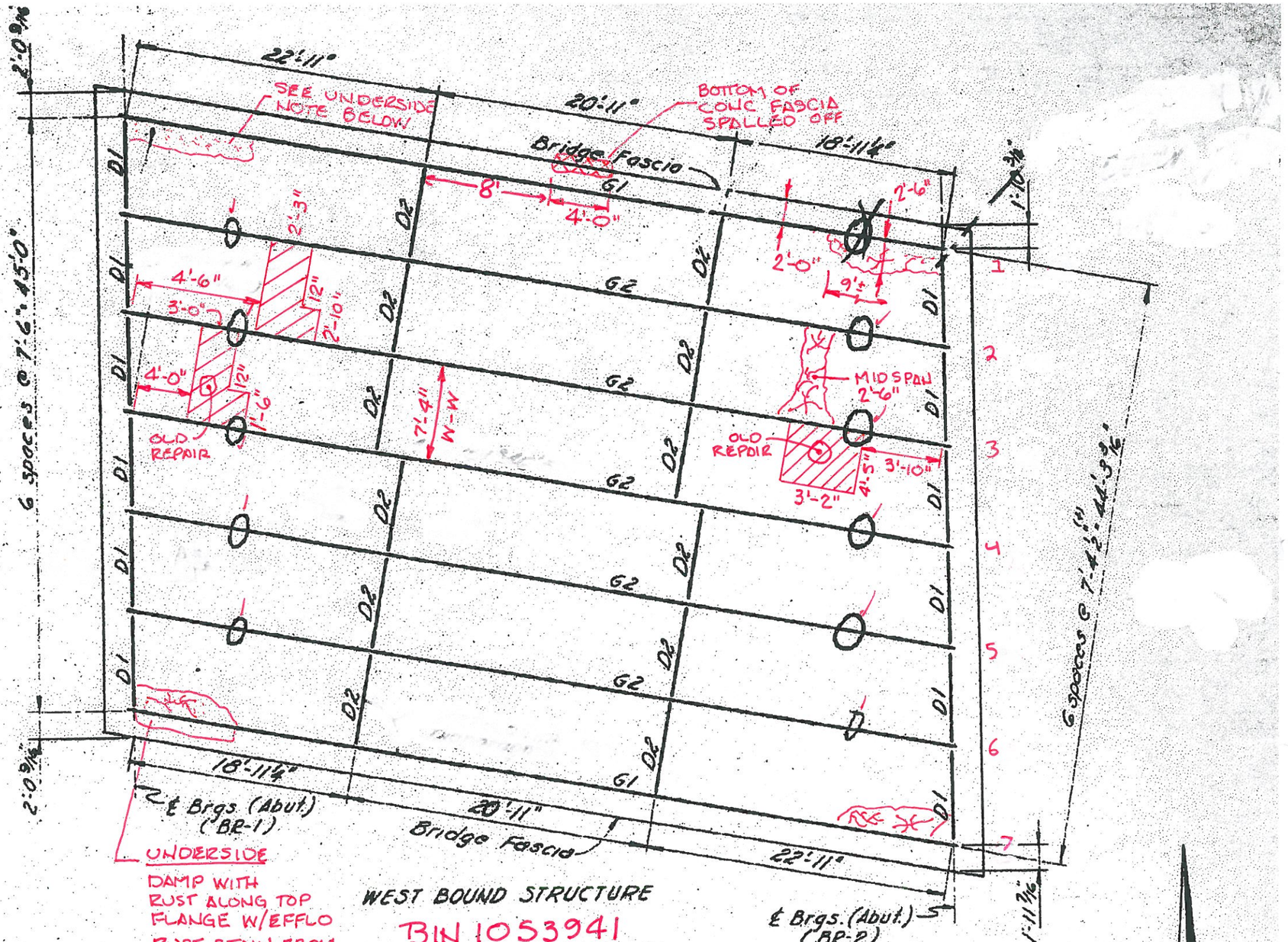

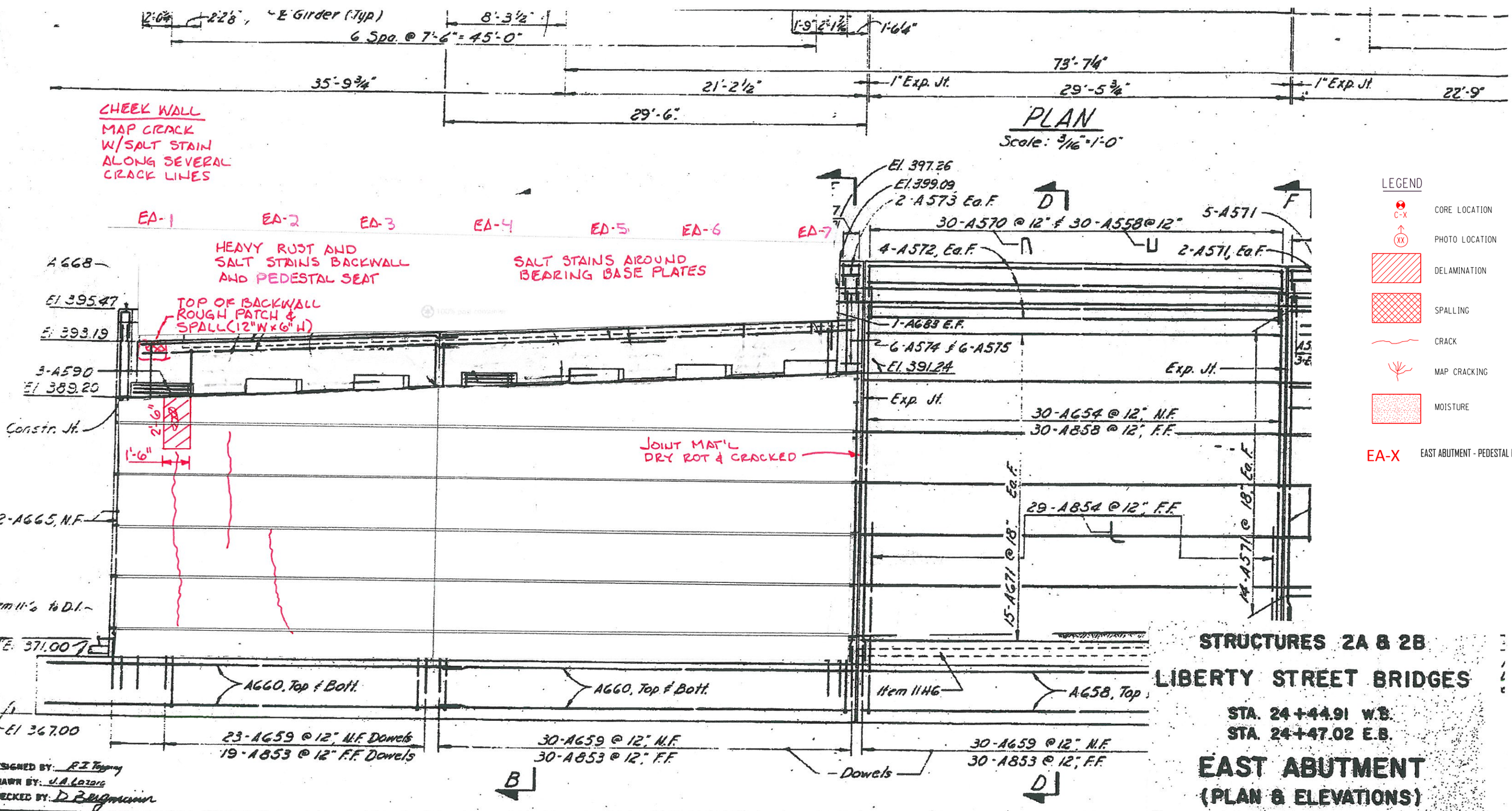

NE WINGWALL
MAP CRACKING ON CHEEK WALL
MINOR SURFACE CRACK
SALT STAINS FROM PARAPET JOINT
FEW RUST STAINS

BIN 1053941
WESTBOUND
I-690

IN-DEPTH PHOTO DOCUMENTATION

C&S Engineers, Inc.
499 Col. Eileen Collins Blvd.
Syracuse, New York 13212
Phone: (315) 455-2000
Fax: (315) 455-9667
www.cscos.com

I-690 WB over Liberty St - BIN 1053941



DESCRIPTION: WEST ABUTMENT – PEDESTAL 4 – TYPICAL CONCRETE

PHOTO 1



DESCRIPTION: WEST ABUTMENT – PEDESTAL 5 – TYPICAL BEARING

PHOTO 2

ID Numbers in Photo's are for field use only.

C&S Engineers, Inc.
499 Col. Eileen Collins Blvd.
Syracuse, New York 13212
Phone: (315) 455-2000
Fax: (315) 455-9667
www.cscos.com

I-690 WB over Liberty St - BIN 1053941



DESCRIPTION: WEST ABUTMENT – NORTH END – CHEEKWALL AND BOTTOM OF FASCIA – DAMP, RUST STAINS & EFFLORESCENCE

PHOTO 3



DESCRIPTION: WEST ABUTMENT – BEARING 4 – BROKEN ANCHOR BOLT

PHOTO 4

ID Numbers in Photo's are for field use only.

C&S Engineers, Inc.
499 Col. Eileen Collins Blvd.
Syracuse, New York 13212
Phone: (315) 455-2000
Fax: (315) 455-9667
www.cscos.com

I-690 WB over Liberty St - BIN 1053941



DESCRIPTION: WEST ABUTMENT – STEM – UNDER PEDESTAL 2 – DELAMINATED AND SPALLING CONCRETE

PHOTO 5



DESCRIPTION: WEST ABUTMENT – UNDER PEDESTAL 1 – DELAMINATED CONCRETE

PHOTO 6

ID Numbers in Photo's are for field use only.

C&S Engineers, Inc.
499 Col. Eileen Collins Blvd.
Syracuse, New York 13212
Phone: (315) 455-2000
Fax: (315) 455-9667
www.cscos.com

I-690 WB over Liberty St - BIN 1053941



DESCRIPTION: WEST ABUTMENT – SOUTH END – SALT AND RUST STAINS, MAP CRACKING

PHOTO 7



DESCRIPTION: WEST ABUTMENT – SOUTH CHEEKWALL AND WINGWALL – SALT STAINING AND MAP CRACKING

PHOTO 8

ID Numbers in Photo's are for field use only.

C&S Engineers, Inc.
499 Col. Eileen Collins Blvd.
Syracuse, New York 13212
Phone: (315) 455-2000
Fax: (315) 455-9667
www.cscos.com

I-690 WB over Liberty St - BIN 1053941



DESCRIPTION: DECK UNDERSIDE – WEST END – BETWEEN GIRDERS 3 AND 4 – DELAMINATED CONCRETE WITH PREVIOUS REPAIR

PHOTO 9



DESCRIPTION: DECK UNDERSIDE – WEST END – BETWEEN GIRDERS 2 AND 3 – DELAMINATED CONCRETE WITH PREVIOUS REPAIR

PHOTO 10

ID Numbers in Photo's are for field use only.

C&S Engineers, Inc.
499 Col. Eileen Collins Blvd.
Syracuse, New York 13212
Phone: (315) 455-2000
Fax: (315) 455-9667
www.cscos.com

I-690 WB over Liberty St - BIN 1053941



DESCRIPTION: NORTH FASCIA – CONCRETE SPALLING

PHOTO 11



DESCRIPTION: EAST ABUTMENT – SOUTH END – CHEEKWALL AND BOTTOM OF FASCIA – MAP CRACKING

PHOTO 12

ID Numbers in Photo's are for field use only.

C&S Engineers, Inc.
499 Col. Eileen Collins Blvd.
Syracuse, New York 13212
Phone: (315) 455-2000
Fax: (315) 455-9667
www.cscos.com

I-690 WB over Liberty St - BIN 1053941



DESCRIPTION: DECK UNDERSIDE – EAST END – BETWEEN GIRDERS 3 AND 4 – DELAMINATED CONCRETE

PHOTO 13



DESCRIPTION: DECK UNDERSIDE – EAST END – BETWEEN GIRDERS 2 AND 3 – MAP CRACKING

PHOTO 14

ID Numbers in Photo's are for field use only.

C&S Engineers, Inc.
499 Col. Eileen Collins Blvd.
Syracuse, New York 13212
Phone: (315) 455-2000
Fax: (315) 455-9667
www.cscos.com

I-690 WB over Liberty St - BIN 1053941



DESCRIPTION: DECK UNDERSIDE – EAST END – BETWEEN GIRDERS 1 AND 2 – MAP CRACKING

PHOTO 15



DESCRIPTION: EAST ABUTMENT – SOUTH END – JOINT BETWEEN STEM AND MIDWALL - DETERIORATED

PHOTO 16

ID Numbers in Photo's are for field use only.

C&S Engineers, Inc.
499 Col. Eileen Collins Blvd.
Syracuse, New York 13212
Phone: (315) 455-2000
Fax: (315) 455-9667
www.cscos.com

I-690 WB over Liberty St - BIN 1053941



DESCRIPTION: EAST ABUTMENT – PEDESTAL 6 – TYPICAL CONCRETE

PHOTO 17



DESCRIPTION: EAST ABUTMENT – BEARING 3 – TYPICAL RUST

PHOTO 18

ID Numbers in Photo's are for field use only.

C&S Engineers, Inc.
499 Col. Eileen Collins Blvd.
Syracuse, New York 13212
Phone: (315) 455-2000
Fax: (315) 455-9667
www.cscos.com

I-690 WB over Liberty St - BIN 1053941



DESCRIPTION: EAST ABUTMENT – STEM – UNDER PEDESTAL 1 – DELAMINATED CONCRETE

PHOTO 19



DESCRIPTION: EAST ABUTMENT – BACKWALL – BETWEEN PEDESTAL 1 AND CHEEKWALL – ROUGH PATCH AND SPALLING

PHOTO 20

ID Numbers in Photo's are for field use only.

C&S Engineers, Inc.
499 Col. Eileen Collins Blvd.
Syracuse, New York 13212
Phone: (315) 455-2000
Fax: (315) 455-9667
www.cscos.com

I-690 WB over Liberty St - BIN 1053941



DESCRIPTION: WEST ABUTMENT - MIDWALL

PHOTO 21



DESCRIPTION: WEST ABUTMENT – FACING WEST

PHOTO 22

ID Numbers in Photo's are for field use only.

C&S Engineers, Inc.
499 Col. Eileen Collins Blvd.
Syracuse, New York 13212
Phone: (315) 455-2000
Fax: (315) 455-9667
www.cscos.com

I-690 WB over Liberty St - BIN 1053941



DESCRIPTION: NORTHWEST WINGWALL – FACING SOUTHWEST

PHOTO 23



DESCRIPTION: NORTHEAST WINGWALL – FACING SOUTHEAST

PHOTO 24

ID Numbers in Photo's are for field use only.

C&S Engineers, Inc.
499 Col. Eileen Collins Blvd.
Syracuse, New York 13212
Phone: (315) 455-2000
Fax: (315) 455-9667
www.cscos.com

I-690 WB over Liberty St - BIN 1053941



DESCRIPTION: EAST ABUTMENT – FACING EAST

PHOTO 25



DESCRIPTION: EAST ABUTMENT - MIDWALL

PHOTO 26

ID Numbers in Photo's are for field use only.

C&S Engineers, Inc.
499 Col. Eileen Collins Blvd.
Syracuse, New York 13212
Phone: (315) 455-2000
Fax: (315) 455-9667
www.cscos.com

I-690 WB over Liberty St - BIN 1053941



DESCRIPTION: UNDERDECK – FACING NORTH

PHOTO 27



DESCRIPTION: BRIDGE DECK – WEST END FACING EAST

PHOTO 28

ID Numbers in Photo's are for field use only.

C&S Engineers, Inc.
499 Col. Eileen Collins Blvd.
Syracuse, New York 13212
Phone: (315) 455-2000
Fax: (315) 455-9667
www.cscos.com

I-690 WB over Liberty St - BIN 1053941



DESCRIPTION: BRIDGE ELEVATION – FACING SOUTH

PHOTO 29

DESCRIPTION:

PHOTO

ID Numbers in Photo's are for field use only.

PHOTO LOG MAP

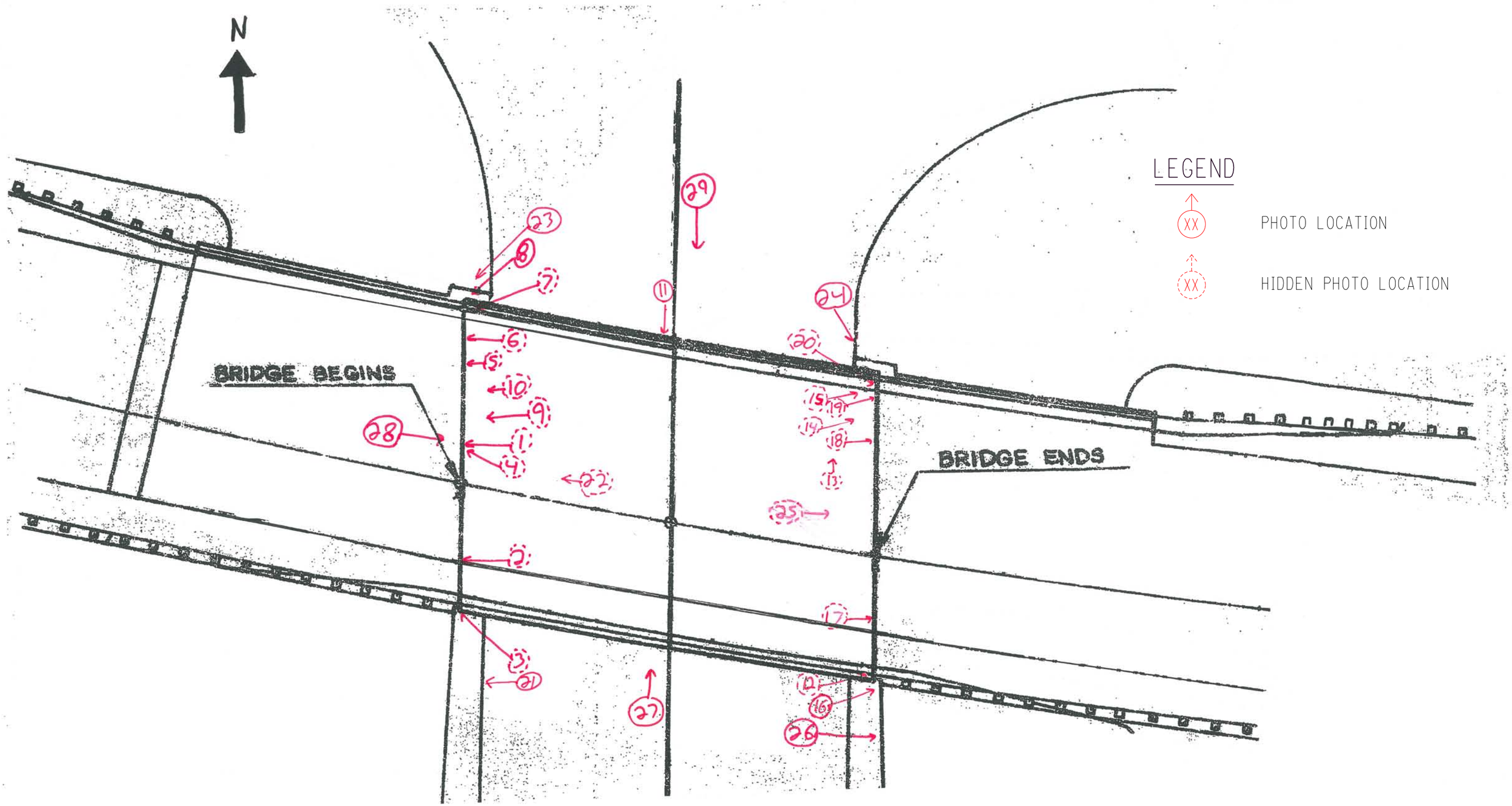

BIN 105394
I-690 WB over
LIBERTY STREET

ASBESTOS DOCUMENTATION

ASBESTOS DOCUMENTATION FROM WATTS ARCHITECTURE & ENGINEERING, INC.

(WILL REPLACE BIN FOLDER ASBESTOS REPORT UPON COMPLETION)

ATHENICA
ENVIRONMENTAL SERVICES INC.
Tel (718) 784-7490
Fax (718) 784-4085

BULK (NOB) ASBESTOS ANALYSIS BY POLARIZED LIGHT MICROSCOPY AND TRANSMISSION ELECTRON MICROSCOPY

3

CLIENT: NYS DOT, Region 3
LABORATORY ID #: 04-05-099
DATES OF ANALYSIS: 05/18/04

PROJECT: Bin # 1053941
ANALYT. METHODOLOGIES: ELAP 198.1, ELAP 198.4
DATE OF REPORT: 05/19/04

LABORATORY RESULTS

CLIENT #	LAB. ID #	LOCATION	%ORG	%ASI	%AII	PLM RESULTS	TYPE OF ASBEST.	TEM RESULTS	TYPE OF ASBEST.	POSIT. / NEGAT.
01	04-05-099-01	Steel Paint Coating/G1 @ begin abutment	8.94	0.27	90.78	**ND**	NA	**ND**	NA	**Negat.**
02	04-05-099-02	Steel Paint Coating/G2 @ begin abutment	11.46	2.78	85.76	**ND**	NA	**ND**	NA	**Negat.**
03	04-05-099-03	Steel Paint Coating/G3 @ end abutment	7.16	2.67	90.16	**ND**	NA	**ND**	NA	**Negat.**

ANALYST
E. Dimitrakas

LABORATORY DIRECTOR
Spiro Dongaris

LABORATORY CERTIFICATION NUMBERS: NVLAP 101958, ELAP 10955

- Athenica Environmental Services Inc. (AES), is responsible only for information pertaining to samples taken by its employees.
- Samples will be stored for sixty (60) days. AES Inc., should be notified within this time frame for a true duplicate analysis.
- The report relates only to items tested. This report must not be used to claim product endorsement by NVLAP or any other agency of the U.S. Government. Test reports may not be reproduced except in full and with prior approval of AES Inc.
- The liability of Athenica Environmental Services Inc. with respect to the services charged, shall in no event exceed the amount of the invoice.

ATHENICA
ENVIRONMENTAL SERVICES INC.
45-09 GREENPOINT AVENUE
LONG ISLAND CITY, NY 11104
Tel. (718) 784-7490
Fax. (718) 784-4085

PROJECT NO. (ATHENICA FILE#) C003314 | SITE DLY # 1053941

METHOD OF SHIPMENT U.S. MAIL | DATE 4/26/ ~~2003~~ 2004

INSPECTOR W A Kick

NUMBER OF SAMPLES 3 | TYPE OF ANALYSIS REQUESTED ☐ PLM ☒ NOB-PLM ☒ NOB-TEM ☐ OTHERS

TURNAROUND TIME ☐ 6 HRS ☐ 12 HRS ☐ 24 HRS ☒ OTHER HRS

COMMENTS ATT: CHRISTOPHER ANDERSON
333 E. WASHINGTON ST. SYRACUSE, N.Y. 13202

HOM. AREA	SAMLPLE #	SAMPLE DESCRIPTION	SAMPLE LOCATION	FIELD COMMENTS	LABORATORY RESULTS		
					PLM	PLM-NOB	TEM-NOB
1053941	01	STEEL PAINT COAT	G1 @ Begin Abut.				
	02	"	G2 " " "				
	03	"	G3 " End Abut.				

TRANSMITTAL OF RESULTS :
[X] STANDARD
[ ] TELEPHONE RESULTS TO
[ ] FAX RESULTS TO

TELEPHONE # : (315) 428-4628
FAX # :

BATCH # : 04-05-099

CHAIN OF CUSTODY RECORD

RELINQUISHED BY :	W A Kick	DATE :	5 / 6 / ~~2003~~ 2004	TIME :	10 AM
RECEIVED BY :	FEDEX	DATE :	5 / 9 / 2004	TIME :	
ANALYST :	[illegible]	DATE :	5 / 18 / 2004	TIME :	

LABORATORY ACCREDITATION :
NVLAP# 101958 ELAP# 10955

NEW YORK STATE
DEPARTMENT OF TRANSPORTATION
D031085 P.I.N 3501.60

LEVEL 1 LOAD RATING
B.I.N. 1053941
I-690 WB over LIBERTY STREET

LOAD RATING SUMMARY TABLE (LOAD FACTOR)					
CONTROLLING MEMBER	CONTROLLING PARAMETER	LIVE LOAD	LIVE LOAD TYPE	INVENTORY RATING	OPERATING RATING
(G2) INTERIOR GIRDER	SERVICE	HS20-44	Axle Load	HS 35.7 (64.3 TONS)	HS 59.7 (107.5 TONS)
(G2) INTERIOR GIRDER	SERVICE	ALTERNATE MILITARY LOADING	Axle Load	2.155 (51.7 TONS)	3.599 (86.3 TONS)

DOES NOT INCLUDE FUTURE WEARING COURSE

ANALYSIS METHOD:LOAD FACTOR

RECOMMENDED POSTING AS-IS CONDITION: _____ Tons __X__ None

CALCULATED BY:

STATE OF NEW YORK JEFFREY M. REINA No. 081990 LICENSED PROFESSIONAL ENGINEER

DATE: 4-7-2014

QUALITY ASSURANCE BY:

STATE OF NEW YORK CHARLES F. STANTON IV 077396 LICENSED PROFESSIONAL ENGINEER

DATE: 4-7-2014

C&S COMPANIES

499 Col. Eileen Collins Blvd.
Syracuse, NY 13212
phone 315-455-2000
fax 315-455-9667
www.cscos.com

ENGINEERS
DESIGN BUILD
TECHNICAL RESOURCES
OPERATIONS

C&S Companies

C&S Engineers, Inc.
Syracuse Hancock International Airport
Syracuse, NY 13212
phone 315-455-2000
fax 315-455-9667
www.cscos.com

TECHNICAL MEMORANDUM

TO: **FILE (190.514.001)**

FROM: **JESSICA S. BAUER, P.E.**
NYSPE 084915

DATE: **FEBRUARY 5, 2014**

C&S PROJECT NO.: 190.514.001

RE: **SEISMIC ASSESSMENT SUMMARY**
NEW YORK STATE DEPARTMENT OF TRANSPORTATION
D031085; PIN 3501.60; I-81

BIN: **1053941 Seismic Assessment**

This memorandum summarizes the seismic assessment conducted for BIN 1053941 as part of the Interstate 81 Project in Syracuse, NY. The purpose of the assessment is to determine if seismic retrofits are warranted at the superstructure to substructure connection, and if further seismic evaluation of the structure is required. This memorandum will give the assessment results, retrofits required and recommendations for further seismic evaluation of the structure.

ASSESSMENT PROCEDURE

The seismic assessment was performed in accordance with the FHWA Seismic Retrofitting Manual for Highway Structures: Part 1 - Bridges, January 2006. As per the referenced manual, seismic assessment was performed for both lower level and upper level earthquake ground motion. The lower level earthquake ground motion has a reasonable likelihood of occurrence within the life of the bridge (50% probability of exceedance within a 75 year bridge life). The upper level earthquake ground motion has a finite likelihood of occurrence within the life of the bridge (7% probability of exceedance within a 75 year bridge life).

Values for the spectral acceleration for the Syracuse area used in the assessment are as follows:

- Lower Level Earthquake Ground Motion for a Short Period (0.2 seconds): $S_S = 0.0251$
- Lower Level Earthquake Ground Motion for a Long Period (1.0 seconds): $S_1 = 0.0076$
- Upper Level Earthquake Ground Motion for a Short Period (0.2 seconds): $S_S = 0.139$
- Upper Level Earthquake Ground Motion for a Long Period (1.0 seconds): $S_1 = 0.047$

These values are considered constant and are the same for all seismic assessments of bridges in the Syracuse area.

The Site Class is based on the soil conditions at the bridge location. It was determined that this parameter has little effect on the results of the seismic assessment because the spectral

You created this PDF from an application that is not licensed to print to novaPDF printer (http://www.novapdf.com)

acceleration values for the Syracuse area are small. Based on this, a site class of D was used for all seismic assessments of bridges in the Syracuse area.

Bridge parameters used in the seismic assessment were retrieved from the record drawings and WinBolts data.

The seismic assessment takes into account the anticipated service life, importance, and the seismic exposure of the bridge to determine a seismic retrofit category (SRC). The SRC is then used to determine seismic evaluation methods and retrofit measures. There are four SRCs, A through D. Seismic retrofit category A is the lowest category; bridges in this category do not require retrofits or further seismic evaluation. Seismic retrofit category D is the highest category; bridges in this category requiring the most rigorous seismic evaluations and retrofits.

ASSESSMENT RESULTS

The SRC for the bridge is "**C**" for lower level earthquake ground motion and "**B**" for upper level earthquake ground motion.

RETROFITS REQUIRED

Bearing replacements and seat width improvements are not required at the abutments. Additional retrofits may be required if further seismic evaluation is needed.

RECOMMENDATIONS FOR FURTHER SEISMIC EVALUATION

No further seismic evaluation is required for lower level earthquake ground motion. For the upper level earthquake ground motion, it is recommended that the capacities of the bearings are checked as per Section 5.2 of the referenced manual.

Retrofit cost estimates will be provided after any further required seismic evaluations are completed.

You created this PDF from an application that is not licensed to print to novaPDF printer (http://www.novapdf.com)

ENGINEERS
DESIGN BUILD
TECHNICAL RESOURCES
OPERATIONS

C&S Companies

C&S Engineers, Inc.
Syracuse Hancock International Airport
Syracuse, NY 13212
phone 315-455-2000
fax 315-455-9667
www.cscos.com

TECHNICAL MEMORANDUM

TO: **FILE (190.514.001)**

FROM: **PAUL F. BYRNE, P.E.**
NYSPE 055928

DATE: **JUNE 3, 2014**

C&S PROJECT NO.: 190.514.001

RE: **NEW YORK STATE DEPARTMENT OF TRANSPORTATION**
D031085; PIN 3501.60; I-81 Opportunities, BIN 1053941 Fatigue Evaluation

---

This memorandum documents a fatigue evaluation conducted for the existing Interstate 81 Viaduct Project. Existing structures with AASHTO Category D, E, and E' fatigue-prone details require 100% hands-on inspection unless proven to be exempt. The purpose of the evaluation is to assess the remaining life of fatigue-prone components.

EVALUATION PROCEDURES

The fatigue evaluation was performed in accordance with the AASHTO Guide Specification for Fatigue Evaluations of Existing Steel Bridges, 1990. Fatigue-prone welds identified in the biennial inspection reports were located on record drawings and confirmed visually in the field. Additional information concerning fatigue-prone welds located in BIN folders was also obtained and reviewed prior to inspection.

EVALUATION RESULTS

The results of the fatigue evaluation of the existing bridge are shown below. The remaining safe fatigue life of the Interior Girder fatigue components have been **exhausted**.

Fatigue Detail Location	Remaining Safe Fatigue Life (Years)	Remaining Mean Fatigue Life (Years)
Span 1, Exterior Girders G1, End of Bottom Flange Cover Plate	Infinite	Infinite
Span1, Interior Girders, G2 End of Bottom Flange Cover Plate	-11.67	49.94

E. Recommendations:

The purpose of this deck evaluation is to document and determine existing conditions of the deck. It will be used as a tool for developing the scope of work and cost estimates for the development and comparison of alternatives for the overall project.

The total damaged area is approximately 16% of the total deck area. Due to the age, condition and chloride-ion content of the bridge deck concrete, the bridge deck should be rehabilitated or replaced to meet current design standards and to mitigate excessive future maintenance costs.

Option 1 – Scarify and Bridge Deck Overlay

The maximum service life this option would provide is 25 years. The design life of this project is 30 years (ETC + 30). This option does not meet the project objective of obtaining 30+ years of service life.

Option 2 – Bridge Deck Rehabilitation with 100% Deep Removal

This option will involve partial depth reconstruction with top mat exposure of the entire bridge deck to remove the chloride contaminated concrete (100% deep removal). The existing bridge deck thickness is 8” with 2” concrete cover over the top mat of reinforcing. The proposed partial depth reconstruction will include the addition of 1 ½” of concrete to provide the standard 9 ½” bridge deck thickness. The existing top mat of reinforcing bars will be removed and replaced to accommodate the standard 3” of concrete cover. The existing vertical faced parapet with safety walk and curb along both sides of the bridge will be removed and replaced with single-slope concrete barrier. The existing original armor bridge joints will be replaced with armorless bridge joints. The Level 1 Load Rating for the final condition was found to be acceptable. This option would provide a service life of 35 years to the bridge deck. The construction cost of this option is $ 0.295 million.

Option 3 – Bridge Deck Replacement with Cast-In-Place Concrete

This option would involve the complete demolition of the existing bridge deck, parapet walls and curbs, and original bridge deck joints. The bridge deck would be replaced with a new concrete deck, new single-slope concrete barrier and new armorless bridge joints. The new bridge deck would be 9 ½" standard thickness as compared to the 8" of existing thickness. The Level 1 Load Rating for the final condition was found to be acceptable. This option would provide a service life of 40 years to the bridge deck. The construction cost of this option is $ 0.341 million.

Option 4 – Bridge Deck Replacement with Pre-cast Concrete Deck Panels

This option will have the highest construction cost of all the options; however, traffic control costs may be lower due to the reduced construction time. Comparison of accelerated construction versus conventional construction is beyond the scope of work for this project at this time.

IN-DEPTH INSPECTION REPORT

D031085 P.I.N. 3501.60

B.I.N. 1053942

TEAM LEADER Andrew J. Fuller, P.E. 59848
NYSPE LICENSE #

ASSISTANT TEAM LEADER Jeffrey M. Reina, P.E.
ASSISTANT TEAM LEADER Logan Bessel
ASSISTANT TEAM LEADER Jerome Getter

FEATURE CARRIED I - 690 Eastbound
FEATURE CROSSED Liberty Street

DATE FIELD WORK BEGAN January 9, 2014
DATE FIELD WORK COMPLETED January 9, 2014

TABLE OF CONTENTS

- TP 349 & 350
- IN-DEPTH CONDITION DOCUMENTATION
- IN-DEPTH PHOTO DOCUMENTATION
- ASBESTOS REPORT

TP 349 & TP 350

BRIDGE ELEMENT RATINGS

Inspection Date: 3/19/2012 RC: 33 BIN: 1053942

Bridge Ratings

Carried: 690I 690I33012013 Crossed: LIBERTY STREET CheckValue: 1,778,849,283

Inspection Agency: 10 - NYSDOT Type of Inspection: 1 - BIENNIAL
GTMS: 302 -- Steel - Stringer/Multi-Beam or Girder
POSTINGS: See Gen Rec Page 1 for Postings at time of inspection.
Further Investigation Needed: No
State Highway Number: 54-16 Milepoint: 7.74 AADT/Yr: 25733 / 2002
Orientation: 3 - East Political Unit: 2055 - City of SYRACUSE Year Built: 1968
Total Spans: 1 Ramp Bridge Attached To Span: NA BIN: NA
General Recommendation: 5 Computed Condition Rating: 4.516

Abutment Ratings:	Beg Abut	End Abut
Joint with Deck	8	1
Bearings, Bolts, Pads	4	4
Seats and Pedestals	6	5
Backwall	5	5
Stem (Breastwall)	5	5
Erosion or Scour	6	6
Footings	9	9
Piles	9	9
Recommendation	5	5

Wingwall Ratings:	Beg Abut	End Abut
Walls	5	5
Footings	9	9
Erosion or Scour	5	5
Piles	9	9

Channel Ratings:	Channel
Stream Alignment	8
Erosion and Scour	8
Waterway Opening	8
Bank Protection	8

Approach Ratings:	Approaches
Drainage	5
Embankment	6
Settlement	4
Erosion	6
Pavement	4
Guide Railing	4

Number of Flags Issued:

RED: 0 Yellow: 0 Safety: 0

Vulnerability Reviews Recommended: 1=Yes, 2=No, 3=NA, X=NotActive

Hydraulic: 3	Overload: X	Steel: 2
Collision: 2	Concrete: X	Seismic: X

Inspector's Signature: CheckValue: 1,778,849,283 Date: 3/19/2012

David Hann,PE () (Inspector ID:3000055)

Signed copy of this inspection report is available in the appropriate NYSDOT Regional Office

Reviewed By: Date: 5/11/2012

James R. Manning,PE () (QC ID:3000023)

Signed copy of this inspection report is available in the appropriate NYSDOT Regional Office

Inspection Date: 3/19/2012 RC: 33 BIN: 1053942

Span Ratings

Carried: 690I 690I33012013 Crossed: LIBERTY STREET CheckValue: 1,778,849,283

Deck Element Ratings:	**001**
Wearing Surface	3
Curbs	5
Sidewalks, Fascias	5
Railings, Parapets	4
Scuppers	8
Gratings	8
Median	8
Mono Deck Surface	3

Superstructure Ratings:	**001**
Structural Deck	3
Primary Members	6
Secondary Members	6
Paint	5
Joints	8
Recommendation	5

Pier Ratings:	**001**
Bearings, Bolts, Pads	8
Pedestals	8
Top of Cap or Beam	8
Stem Solid Pier	8
Cap Beam	8
Pier Columns	8
Footings	8
Erosion or Scour	8
Piles	8
Recommendation	8

Utility Ratings:	**001**
Lighting	3
Sign Structure	6
Utilities and Support	8

Field Notes:

Field Date	Arrival	Departure	Temp (C)	Temp (F)	Weather Conditions
3/19/2012	8:00:00 AM	2:00:00 PM		65	Sunny

IN-DEPTH CONDITION DOCUMENTATION

BIN 1053942

Visual Inspection

The bridge was built in 1968 with a major rehabilitation in 1984. During the 1984 rehabilitation, miscellaneous concrete repairs were made to the abutments and piers under contract D500057. Superstructure repairs included painting structural steel, concrete bridge deck overlay, and deck joint replacement.

Cracks, spalls, and other field observations are shown on the plans. Below is a brief summary of conditions for each feature.

Superstructure

Deck – Bridge Deck Evaluation not required. The Bridge Deck rating from 2012 is less than 5.

Steel – See Structural Steel Inspection Summary

Bearings – Bearing elements typically have rust scale and pack rust.

Substructure

West Abutment – The concrete backwall, pedestals, and stem contained only minor isolated areas of delaminated concrete and cracking. There were salt stains on the cheekwall and bearing seats. The backwall had heavy salt stains along the entire length and rust stains behind pedestal 12. The southwest wingwall had minor map cracking with salt and rust staining present. The material in both midwall joints appeared dry rotted and cracked.

East Abutment – The concrete backwall and stem contained minor isolated areas of delaminated concrete and cracking. Pedestals 13 and 14 exhibited horizontal cracks on the north and west faces. There were heavy salt stains on the backwall and bearing seats. Rust stains were evident behind pedestal 9. The southeast wingwall had map cracking and rust staining, mostly below the cheekwall.

STRUCTURAL STEEL INSPECTION SUMMARY

BIN 1053942

Special Emphasis Inspection Required

Non-Redundant/Fracture Critical Members – No

Pin and Hangers – No

Fatigue-Prone Welds – Yes

Non-Categorized Fatigue-Prone Details – No

Other (Specified in Text) – No

Special Emphasis Details

Cover plate welds: 100% Hands-on inspection performed.

Overall Steel Condition

The steel showed no sign of major deterioration. There were no isolated pockets of major section loss and no areas of concern were observed.

Paint

The paint is in good overall condition with minor rusting and flaking along the edges.

Section Loss

Due to the age of the steel a blanket 5% section loss should be used in load rating.

SW WINGWALL
MINOR MAP CRACKS WITH RUST STAINS AT UPPER ELEVATIONS

WA-14 WA-13 WA-12 WA-11 WA-10 WA-9 WA-8

HEAVY SALT & WATER STAIN

HEAVY SALT STAINS ON BACKWALL FROM JOINT AT TOP OF BACKWALL

RUST STAIN

RUST STAIN (Typ.)

MINOR SALT STAIN

JOINT MAT'L DRY ROT CRACK REPLACE

A504
A505 N.F.
A506 F.F.
A503
A535 E.F.

Epoxy Banding Compound (incl. in Item 18F)
Resurfacing of Exist. Concrete Item 18F
12"

1/8" ≤1/8 ≤1/8"

El. 374.00(±)
Approx. Existing Ground Line
El. 369.00(±)
Item 11-6 to 5' Dia.

3'-5 5/8" 6" Working Point 3 29'-7" 4'-10" 2'-6 1/2" 19'-7" 3'-4 5/8" 40'-11 1/4"
56'-0"

1" Expansion Jt.
Ea.F.

21-A520 @ 12" & 21-A508 @ 12"
5-A521 @ Top
4-A522 Ea.F.
21-A604 @ 12" N.F.
21-A808 @ 12" F.F.
14-A521 @ 18" Ea.F.
Scoring (Typ.)
Expansion Jt.
20-A804 @ 12" F.F.
Item 11 H6
A608 T. & B.
3-A605 N.F.
3-A809 F.F.
2'-6" Deep Holes for Ø D10 X 3'-0" Deep Bars. Place Bars in ft.
21-A609 @ 12" N.F.
21-A803 @ 12" F.F.

PLAN
Scale: 3/16" = 1'-0"

85'-1 3/8"
21-A520 @ 12" & 21-A508 @ 12"
El. 395.03
El. 396.21
6-A524 & 6-A525
El. 391.17
21-A604 @ 12" N.F.
21-A808 @ 12" F.F.
2-A537 F.F.
Construction Jt. in wall only
15-A621 @ 18" Ea.F.
3'-6" (Typ.)
Expansion Jt.
20-A804 @ 12" F.F.
1%

Notes:
1. Piles not shown. Fo see Dwg. No. 206.
2. Trans. bars in Foo for spacing & bar Plan Dwg. No. 206.

LEGEND

C-X CORE LOCATION
XX PHOTO LOCATION
DELAMINATION
SPALLING
CRACK
MAP CRACKING
MOISTURE
WA-X WEST ABUTMENT - PEDESTAL NO.

DESIGNED BY: R.J. Tooey
DRAWN BY: Van Der Heiden
CHECKED BY: L. Bergmann

BIN 1053942
EASTBOUND
I-690

STRUCTURES 2A & 2B
LIBERTY STREET BRIDGES
STA. 24+44.91 W.B.
STA. 24+47.02 E.B.
WEST ABUTMENT

WALL BETWEEN ABUTMENT
MINOR CRACKS IN FACE
MORE NOTICABLE ON PARAPET

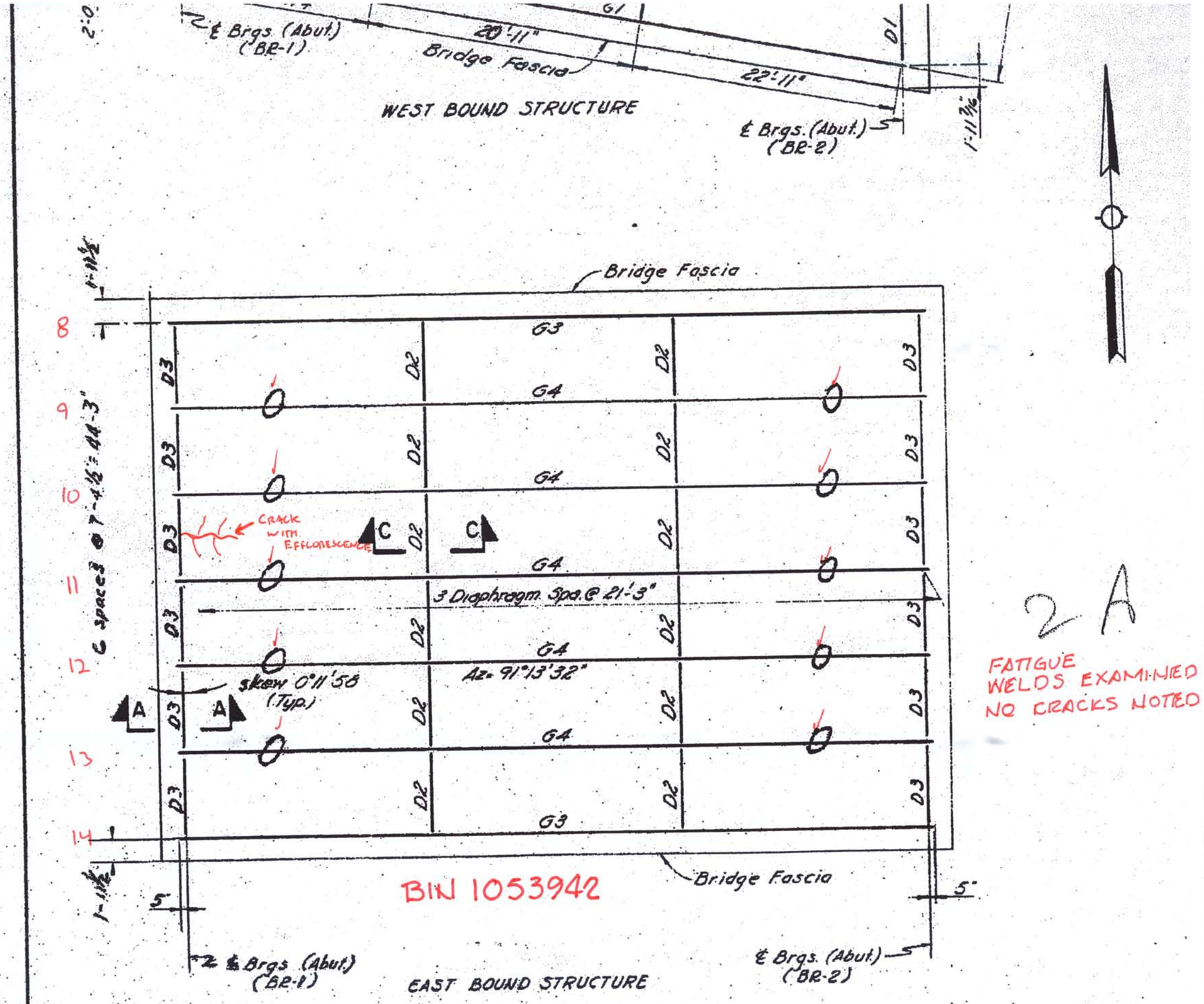

FRAMING PLAN

Scale: 1/8" = 1'-0"

2A

FATIGUE WELDS EXAMINED
NO CRACKS NOTED

LEGEND

- CORE LOCATION
- PHOTO LOCATION
- DELAMINATION
- SPALLING
- CRACK
- MAP CRACKING
- MOISTURE

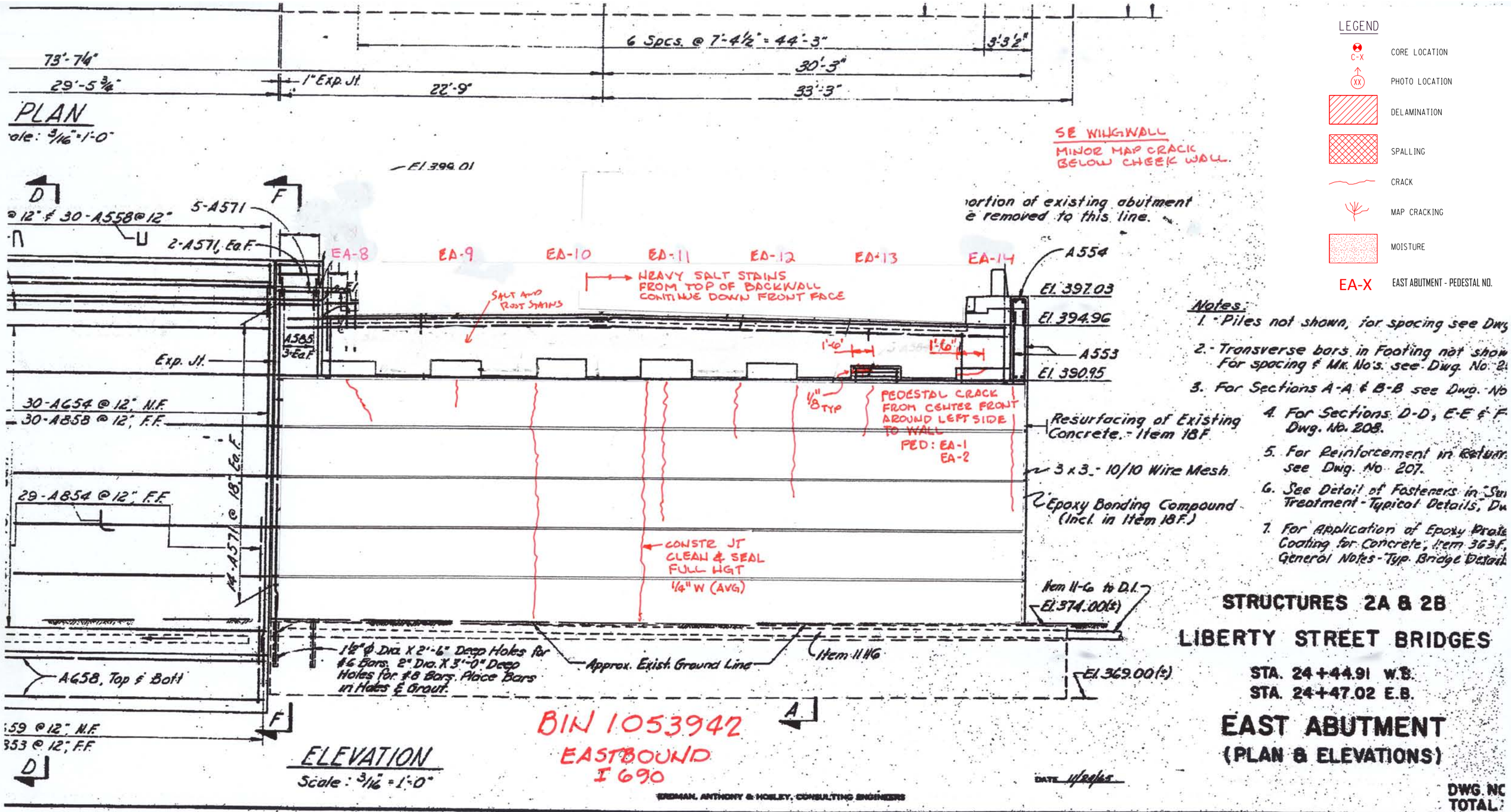

PLAN
Scale: 3/16" = 1'-0"
73'-7¼"
29'-5¾"
1" Exp. Jt.
22'-9"
6 Spcs. @ 7'-4½" = 44'-3"
30'-3"
33'-3"
3'-3½"
SE WINGWALL
MINOR MAP CRACK BELOW CHEEK WALL.
El. 399.01
D
F
@ 12" & 30-A558 @ 12"
5-A571
2-A571, Ea. F.
EA-8
EA-9
EA-10
EA-11
EA-12
EA-13
EA-14
A554
El. 397.03
El. 394.96
A553
El. 390.95
HEAVY SALT STAINS FROM TOP OF BACKWALL CONTINUE DOWN FRONT FACE
SALT AND RUST STAINS
A585 3-Ea. F.
Exp. Jt.
1'-6"
1'-6"
1/8" TYP
PEDESTAL CRACK FROM CENTER FRONT AROUND LEFT SIDE TO WALL
PED: EA-1 EA-2
30-A654 @ 12", N.F.
30-A858 @ 12", F.F.
Resurfacing of Existing Concrete. - Item 18F
3 x 3 - 10/10 Wire Mesh
Epoxy Bonding Compound (Incl. in Item 18F.)
29-A854 @ 12", F.F.
14-A571 @ 18", Ea. F.
CONSTR. JT CLEAN & SEAL FULL HGT 1/4" W (AVG)
Item 11-6 to D.I.
El. 374.00(±)
1½" ϕ Dia. X 2'-6" Deep Holes for #6 Bars. 2" Dia. X 3'-0" Deep Holes for #8 Bars. Place Bars in Holes & Grout.
Approx. Exist. Ground Line
Item 11116
El. 369.00(±)
A658, Top & Bott
A
F
D
59 @ 12", N.F.
353 @ 12", F.F.
ELEVATION
Scale: 3/16" = 1'-0"
BIN 1053942
EASTBOUND
I 690
ERDMAN, ANTHONY & HOSLEY, CONSULTING ENGINEERS
DATE 11/24/65
LEGEND
CORE LOCATION
PHOTO LOCATION
DELAMINATION
SPALLING
CRACK
MAP CRACKING
MOISTURE
EA-X
EAST ABUTMENT - PEDESTAL NO.
Notes:
1. Piles not shown, for spacing see Dwg
2. Transverse bars in Footing not show For spacing & Mk. No's. see Dwg. No. 2
3. For Sections A-A & B-B see Dwg. No
4. For Sections D-D, E-E & F Dwg. No. 208.
5. For Reinforcement in Return see Dwg. No. 207.
6. See Detail of Fasteners in Su Treatment - Typical Details, Dw
7. For Application of Epoxy Prote Coating for Concrete, Item 363F, General Notes - Typ. Bridge Detail
STRUCTURES 2A & 2B
LIBERTY STREET BRIDGES
STA. 24+44.91 W.B.
STA. 24+47.02 E.B.
EAST ABUTMENT
(PLAN & ELEVATIONS)
DWG. NO
TOTAL

LEGEND

- C-X — CORE LOCATION
- XX — PHOTO LOCATION
- DELAMINATION
- SPALLING
- CRACK
- MAP CRACKING
- MOISTURE

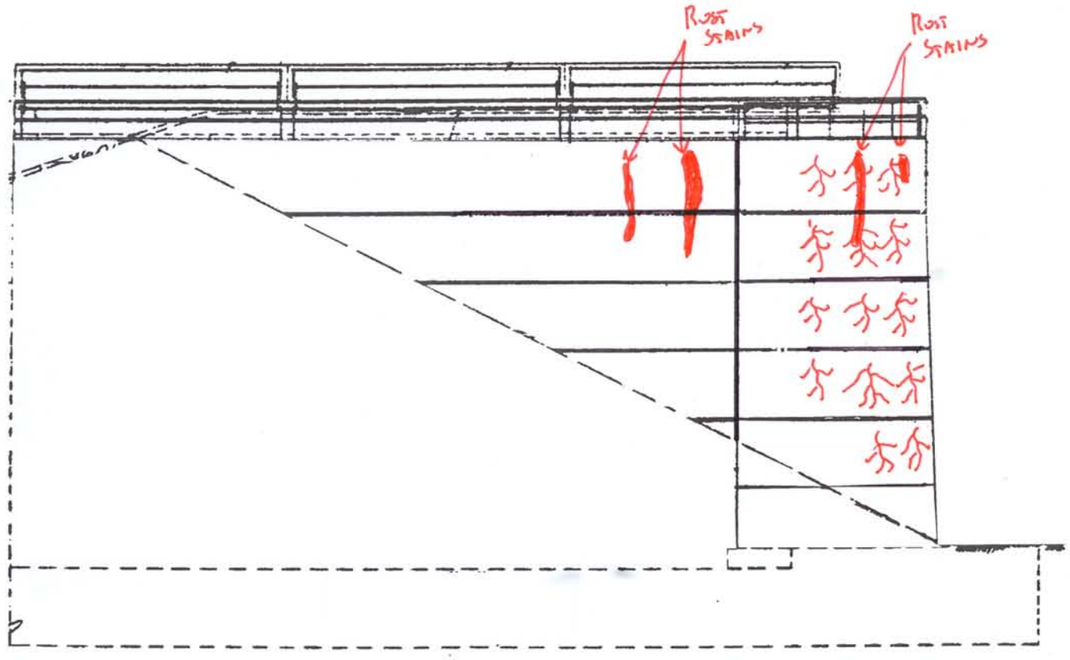

SOUTHWEST WINGWALL

ELEVATION

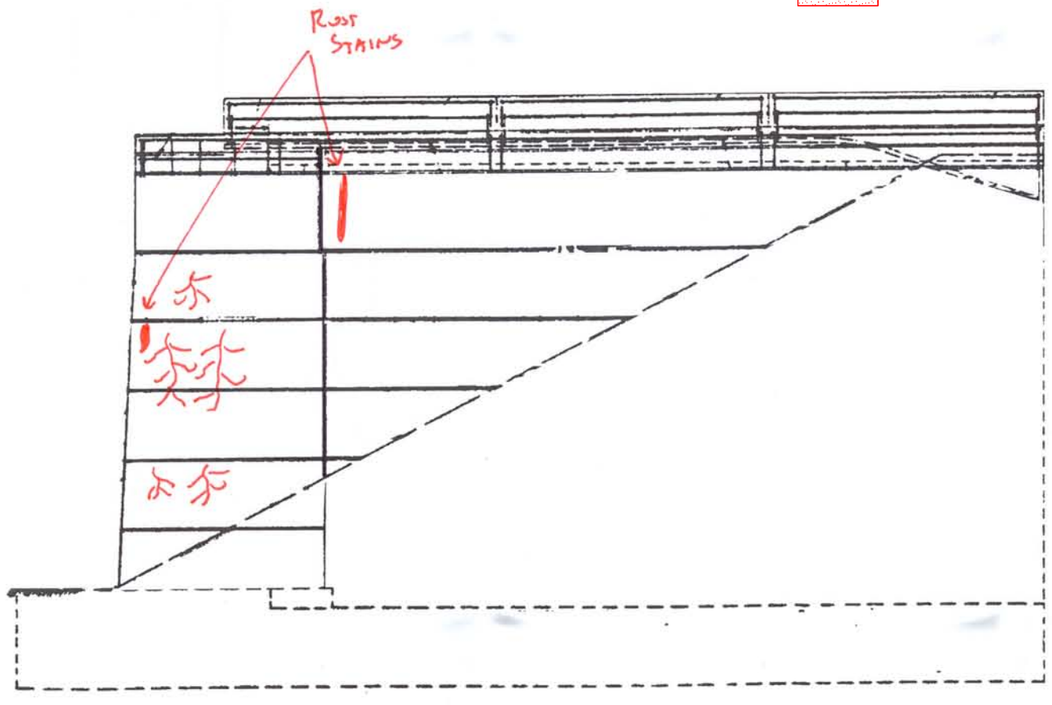

SOUTHEAST WINGWALL

ELEVATION

BIN 1053942
I-690 EB OVER
LIBERTY STREET

IN-DEPTH PHOTO DOCUMENTATION

C&S Engineers, Inc.
499 Col. Eileen Collins Blvd.
Syracuse, New York 13212
Phone: (315) 455-2000
Fax: (315) 455-9667
www.cscos.com

I-690 EB over Liberty St - BIN 1053942



DESCRIPTION: WEST ABUTMENT – PEDESTAL 10 – TYPICAL CONCRETE

PHOTO 1



DESCRIPTION: WEST ABUTMENT – BETWEEN NORTH CHEEKWALL AND GIRDER 8 – MINOR SALT STAIN

PHOTO 2

ID Numbers in Photo's are for field use only.

C&S Engineers, Inc.
499 Col. Eileen Collins Blvd.
Syracuse, New York 13212
Phone: (315) 455-2000
Fax: (315) 455-9667
www.cscos.com

I-690 EB over Liberty St - BIN 1053942



DESCRIPTION: WEST ABUTMENT – BEARING 8 – RUST SCALE AND SALT STAINS

PHOTO 3



DESCRIPTION: UNDERDECK – WEST END – BAY 3 – CRACKING WITH EFFLORESCENCE

PHOTO 4

ID Numbers in Photo's are for field use only.

C&S Engineers, Inc.
499 Col. Eileen Collins Blvd.
Syracuse, New York 13212
Phone: (315) 455-2000
Fax: (315) 455-9667
www.cscos.com

I-690 EB over Liberty St - BIN 1053942



DESCRIPTION: WEST ABUTMENT – BACKWALL – BEHIND PEDESTAL 12 – RUST STAIN

PHOTO 5



DESCRIPTION: WEST ABUTMENT – BACKWALL – BEHIND PEDESTAL 12 – RUST STAIN

PHOTO 6

ID Numbers in Photo's are for field use only.

C&S Engineers, Inc.
499 Col. Eileen Collins Blvd.
Syracuse, New York 13212
Phone: (315) 455-2000
Fax: (315) 455-9667
www.cscos.com

I-690 EB over Liberty St - BIN 1053942



DESCRIPTION: WEST ABUTMENT – BEARING 14 – RUST SCALE AND SALT STAINS

PHOTO 7



DESCRIPTION: WEST ABUTMENT – BACKWALL – BETWEEN SOUTH CHEEKWALL AND GIRDER 14 – HEAVY SALT AND WATER STAIN

PHOTO 8

ID Numbers in Photo's are for field use only.

C&S Engineers, Inc.
499 Col. Eileen Collins Blvd.
Syracuse, New York 13212
Phone: (315) 455-2000
Fax: (315) 455-9667
www.cscos.com

I-690 EB over Liberty St - BIN 1053942



DESCRIPTION: EAST ABUTMENT – BEARING 8 – RUST SCALE - TYPICAL

PHOTO 9



DESCRIPTION: EAST ABUTMENT – BACKWALL – BEHIND PEDESTAL 9 – SALT AND RUST STAINS

PHOTO 10

ID Numbers in Photo's are for field use only.

C&S Engineers, Inc.
499 Col. Eileen Collins Blvd.
Syracuse, New York 13212
Phone: (315) 455-2000
Fax: (315) 455-9667
www.cscos.com

I-690 EB over Liberty St - BIN 1053942



DESCRIPTION: EAST ABUTMENT – BACKWALL – BETWEEN PEDESTALS 13 AND 14 – SALT STAINING – TYPICAL FOR BEHIND PEDESTALS 10 -14

PHOTO 11



DESCRIPTION: EAST ABUTMENT – PEDESTAL 13 – CRACK IN NORTH AND WEST FACE WITH RUST AND SALT STAINING

PHOTO 12

ID Numbers in Photo's are for field use only.

C&S Engineers, Inc.
499 Col. Eileen Collins Blvd.
Syracuse, New York 13212
Phone: (315) 455-2000
Fax: (315) 455-9667
www.cscos.com

I-690 EB over Liberty St - BIN 1053942



DESCRIPTION: EAST ABUTMENT – PEDESTAL 14 - CRACK

PHOTO 13



DESCRIPTION: EAST ABUTMENT – BACKWALL – BETWEEN SOUTH CHEEKWALL AND GIRDER 14 – SALT STAINING

PHOTO 14

ID Numbers in Photo's are for field use only.

C&S Engineers, Inc.
499 Col. Eileen Collins Blvd.
Syracuse, New York 13212
Phone: (315) 455-2000
Fax: (315) 455-9667
www.cscos.com

I-690 EB over Liberty St - BIN 1053942



DESCRIPTION: SOUTHWEST WINGWALL – FACING NORTHWEST – MAP CRACKING AND RUST STAINS

PHOTO 15



DESCRIPTION: NORTHWEST MIDWALL – FACING WEST

PHOTO 16

ID Numbers in Photo's are for field use only.

C&S Engineers, Inc.
499 Col. Eileen Collins Blvd.
Syracuse, New York 13212
Phone: (315) 455-2000
Fax: (315) 455-9667
www.cscos.com

I-690 EB over Liberty St - BIN 1053942



DESCRIPTION: NORTHEAST MIDWALL – FACING EAST

PHOTO 17



DESCRIPTION: EAST ABUTMENT FACING NORTHEAST

PHOTO 18

ID Numbers in Photo's are for field use only.

C&S Engineers, Inc.
499 Col. Eileen Collins Blvd.
Syracuse, New York 13212
Phone: (315) 455-2000
Fax: (315) 455-9667
www.cscos.com

I-690 EB over Liberty St - BIN 1053942



DESCRIPTION: SOUTHEAST WINGWALL – FACING NORTHEAST – MAP CRACKING AND RUST STAINS

PHOTO 19



DESCRIPTION: UNDERDECK – FACING SOUTHWEST

PHOTO 20

ID Numbers in Photo's are for field use only.

C&S Engineers, Inc.
499 Col. Eileen Collins Blvd.
Syracuse, New York 13212
Phone: (315) 455-2000
Fax: (315) 455-9667
www.cscos.com

I-690 EB over Liberty St - BIN 1053942



DESCRIPTION: ELEVATION

PHOTO 21



DESCRIPTION: BRIDGE DECK – FACING WEST

PHOTO 22

ID Numbers in Photo's are for field use only.

PHOTO LOG

N

LEGEND

XX PHOTO LOCATION

XX HIDDEN PHOTO LOCATION

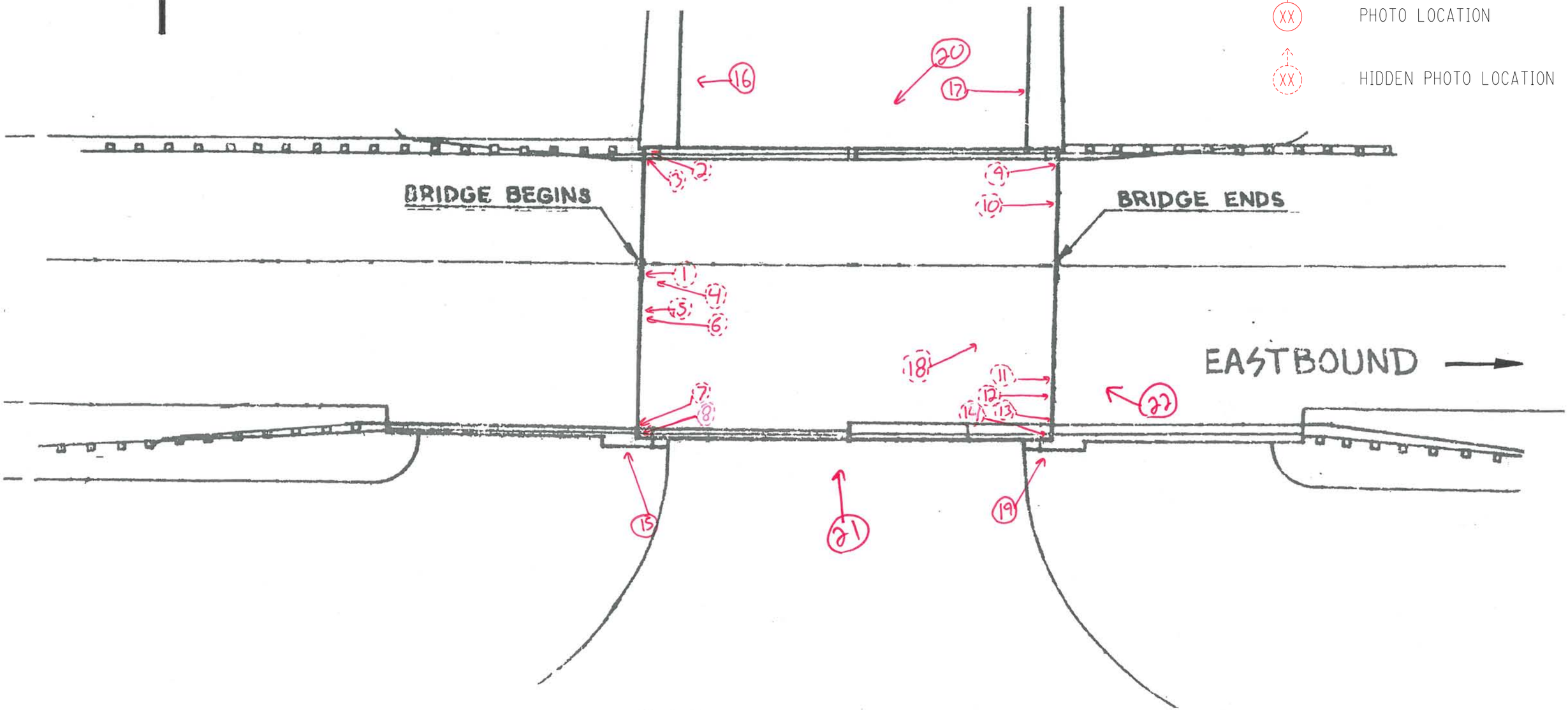

℄ Liberty St.

BIN 1053942
I-690 EB over
LIBERTY STREET

ASBESTOS DOCUMENTATION

ASBESTOS DOCUMENTATION FROM WATTS ARCHITECTURE & ENGINEERING, INC.

(WILL REPLACE BIN FOLDER ASBESTOS REPORT UPON COMPLETION)

ATHENICA
ENVIRONMENTAL SERVICES INC.
Tel (718) 784-7490
Fax (718) 784-4085

BULK (NOB) ASBESTOS ANALYSIS BY POLARIZED LIGHT MICROSCOPY AND TRANSMISSION ELECTRON MICROSCOPY

CLIENT: NYS DOT, Region 3
LABORATORY ID #: 04-05-100
DATES OF ANALYSIS: 05/18/04

PROJECT: Bin # 1053942
ANALYT. METHODOLOGIES: ELAP 198.1, ELAP 198.4
DATE OF REPORT: 05/19/04

LABORATORY RESULTS

CLIENT #	LAB. ID #	LOCATION	%ORG	%ASI	%AII	PLM RESULTS	TYPE OF ASBEST.	TEM RESULTS	TYPE OF ASBEST.	POSIT. / NEGAT.
01	04-05-100-01	Steel Paint Coating/G1 @ end abutment	7.65	2.37	89.98	**ND**	NA	**ND**	NA	**Negat.**
02	04-05-100-02	Steel Paint Coating/G3 @ end abutment	34.96	1.56	63.48	**ND**	NA	**ND**	NA	**Negat.**
03	04-05-100-03	Steel Paint Coating/G7 @ begin abutment	8.49	6.15	85.35	**ND**	NA	**ND**	NA	**Negat.**

ANALYST
E. Dimitrakas

LABORATORY DIRECTOR
Spiro Dongaris

LABORATORY CERTIFICATION NUMBERS: NVLAP 101958, ELAP 10955

- Athenica Environmental Services Inc. (AES), is responsible only for information pertaining to samples taken by its employees.
- Samples will be stored for sixty (60) days. AES Inc., should be notified within this time frame for a true duplicate analysis.
- The report relates only to items tested. This report must not be used to claim product endorsement by NVLAP or any other agency of the U.S. Government. Test reports may not be reproduced except in full and with prior approval of AES Inc.
- The liability of Athenica Environmental Services Inc. with respect to the services charged, shall in no event exceed the amount of the invoice.

ATHENICA
ENVIRONMENTAL SERVICES INC.
45-09 GREENPOINT AVENUE
LONG ISLAND CITY, NY 11104
Tel. (718) 784-7490
Fax. (718) 784-4085

PROJECT NO. (ATHENICA FILE#) C003314

SITE BLN # 1053942

DATE 4/26/ ~~2003~~ 2004

METHOD OF SHIPMENT U.S. MAIL

INSPECTOR W.A. Kick

NUMBER OF SAMPLES 3

TYPE OF ANALYSIS REQUESTED ☐ PLM ☒ NOB-PLM ☒ NOB-TEM ☐ OTHERS

TURNAROUND TIME ☐ 6 HRS ☐ 12 HRS ☐ 24 HRS ☒ OTHER HRS

COMMENTS ATT: CHRISTOPHER ANDERSON
333 E. WASHINGTON ST. SYRACUSE, N.Y. 13202

HOM. AREA	SAMLPLE #	SAMPLE DESCRIPTION	SAMPLE LOCATION	FIELD COMMENTS	LABORATORY RESULTS		
					PLM	PLM-NOB	TEM-NOB
053942	01	STEEL PAINT COAT	61 @ East Abut				
↓	02	"	63 " " "				
↓	03	"	67 @ Brg. Abut.				

TRANSMITTAL OF RESULTS :
STANDARD
TELEPHONE RESULTS TO
FAX RESULTS TO

TELEPHONE # : (315) 428-4628
FAX # :

BATCH # : 04-05-100

CHAIN OF CUSTODY RECORD

RELINQUISHED BY :	WA Kick	DATE :	5 / 6 / ~~2003~~ 2004	TIME :	10 AM
RECEIVED BY :	[illegible]	DATE :	5 / 9 / 2004	TIME :	
ANALYST :	[illegible]	DATE :	5 / 10 / ~~2003~~ 2004	TIME :	

LABORATORY ACCREDITATION :
NYLAP# 101958 ELAP# 10955

NEW YORK STATE
DEPARTMENT OF TRANSPORTATION
D031085 P.I.N 3501.60

LEVEL 1 LOAD RATING
B.I.N. 1053942
I-690 EB over LIBERTY STREET

LOAD RATING SUMMARY TABLE (LOAD FACTOR)					
CONTROLLING MEMBER	CONTROLLING PARAMETER	LIVE LOAD	LIVE LOAD TYPE	INVENTORY RATING	OPERATING RATING
(G2) INTERIOR GIRDER	SERVICE	HS20-44	Axle Load	HS 34.6 (62.3 TONS)	HS 57.8 (104.1 TONS)
(G2) INTERIOR GIRDER	SERVICE	ALTERNATE MILITARY LOADING	Axle Load	2.096 (50.3 TONS)	3.500 (84.0 TONS)

DOES NOT INCLUDE FUTURE WEARING COURSE

ANALYSIS METHOD:LOAD FACTOR

RECOMMENDED POSTING AS-IS CONDITION: _____ Tons __X__ None

CALCULATED BY:



DATE: 4-7-2014

QUALITY ASSURANCE BY:



DATE: 4-7-2014

C&S COMPANIES

499 Col. Eileen Collins Blvd.
Syracuse, NY 13212
phone 315-455-2000
fax 315-455-9667
www.cscos.com

ENGINEERS
DESIGN BUILD
TECHNICAL RESOURCES
OPERATIONS

C&S Companies

C&S Engineers, Inc.
Syracuse Hancock International Airport
Syracuse, NY 13212
phone 315-455-2000
fax 315-455-9667
www.cscos.com

TECHNICAL MEMORANDUM

TO: **FILE (190.514.001)**

FROM: **JESSICA S. BAUER, P.E**
NYSPE 084915

DATE: **FEBRUARY 10, 2014**

C&S PROJECT NO.: 190.514.001

RE: **SEISMIC ASSESSMENT SUMMARY**
NEW YORK STATE DEPARTMENT OF TRANSPORTATION
D031085; PIN 3501.60; I-81

BIN: **1053942 Seismic Assessment**

This memorandum summarizes the seismic assessment conducted for BIN 1053942 as part of the Interstate 81 Project in Syracuse, NY. The purpose of the assessment is to determine if seismic retrofits are warranted at the superstructure to substructure connection, and if further seismic evaluation of the structure is required. This memorandum will give the assessment results, retrofits required and recommendations for further seismic evaluation of the structure.

ASSESSMENT PROCEDURE

The seismic assessment was performed in accordance with the FHWA Seismic Retrofitting Manual for Highway Structures: Part 1 - Bridges, January 2006. As per the referenced manual, seismic assessment was performed for both lower level and upper level earthquake ground motion. The lower level earthquake ground motion has a reasonable likelihood of occurrence within the life of the bridge (50% probability of exceedance within a 75 year bridge life). The upper level earthquake ground motion has a finite likelihood of occurrence within the life of the bridge (7% probability of exceedance within a 75 year bridge life).

Values for the spectral acceleration for the Syracuse area used in the assessment are as follows:

- Lower Level Earthquake Ground Motion for a Short Period (0.2 seconds): $S_S = 0.0251$
- Lower Level Earthquake Ground Motion for a Long Period (1.0 seconds): $S_1 = 0.0076$
- Upper Level Earthquake Ground Motion for a Short Period (0.2 seconds): $S_S = 0.139$
- Upper Level Earthquake Ground Motion for a Long Period (1.0 seconds): $S_1 = 0.047$

These values are considered constant and are the same for all seismic assessments of bridges in the Syracuse area.

The Site Class is based on the soil conditions at the bridge location. It was determined that this parameter has little effect on the results of the seismic assessment because the spectral

You created this PDF from an application that is not licensed to print to novaPDF printer (http://www.novapdf.com)

acceleration values for the Syracuse area are small. Based on this, a site class of D was used for all seismic assessments of bridges in the Syracuse area.

Bridge parameters used in the seismic assessment were retrieved from the record drawings and WinBolts data.

The seismic assessment takes into account the anticipated service life, importance, and the seismic exposure of the bridge to determine a seismic retrofit category (SRC). The SRC is then used to determine seismic evaluation methods and retrofit measures. There are four SRCs, A through D. Seismic retrofit category A is the lowest category; bridges in this category do not require retrofits or further seismic evaluation. Seismic retrofit category D is the highest category; bridges in this category requiring the most rigorous seismic evaluations and retrofits.

ASSESSMENT RESULTS

The SRC for the bridge is "**C**" for lower level earthquake ground motion and "**B**" for upper level earthquake ground motion.

RETROFITS REQUIRED

Bearing replacements and seat width improvements are not required at the abutments. Additional retrofits may be required if further seismic evaluation is needed.

RECOMMENDATIONS FOR FURTHER SEISMIC EVALUATION

No further seismic evaluation is required for lower level earthquake ground motion. For the upper level earthquake ground motion, it is recommended that the capacities of the bearings are checked as per Section 5.2 of the referenced manual.

Retrofit cost estimates will be provided after any further required seismic evaluations are completed.

You created this PDF from an application that is not licensed to print to novaPDF printer (http://www.novapdf.com)

ENGINEERS
DESIGN BUILD
TECHNICAL RESOURCES
OPERATIONS

C&S Companies

C&S Engineers, Inc.
Syracuse Hancock International Airport
Syracuse, NY 13212
phone 315-455-2000
fax 315-455-9667
www.cscos.com

TECHNICAL MEMORANDUM

TO: **FILE (190.514.001)**

FROM: **PAUL F. BYRNE, P.E.**
NYSPE 055928

DATE: **JUNE 3, 2014**

C&S PROJECT NO.: 190.514.001

RE: **NEW YORK STATE DEPARTMENT OF TRANSPORTATION**
D031085; PIN 3501.60; I-81 Opportunities, BIN 1053942 Fatigue Evaluation

---

This memorandum documents a fatigue evaluation conducted for the existing Interstate 81 Viaduct Project. Existing structures with AASHTO Category D, E, and E' fatigue-prone details require 100% hands-on inspection unless proven to be exempt. The purpose of the evaluation is to assess the remaining life of fatigue-prone components.

EVALUATION PROCEDURES

The fatigue evaluation was performed in accordance with the AASHTO Guide Specification for Fatigue Evaluations of Existing Steel Bridges, 1990. Fatigue-prone welds identified in the biennial inspection reports were located on record drawings and confirmed visually in the field. Additional information concerning fatigue-prone welds located in BIN folders was also obtained and reviewed prior to inspection.

EVALUATION RESULTS

The results of the fatigue evaluation of the existing bridge are shown below. The remaining safe fatigue life of the Interior Girder fatigue components have been **exhausted**.

Fatigue Detail Location	Remaining Safe Fatigue Life (Years)	Remaining Mean Fatigue Life (Years)
Span 1, Exterior Girders G3, End of Bottom Flange Cover Plate	Infinite	Infinite
Span 1, Interior Girders G4, End of Bottom Flange Cover Plate	-13.94	38.74

IN-DEPTH INSPECTION REPORT

D031085 P.I.N. 3501.60

B.I.N. 1053969

TEAM LEADER Andrew J. Fuller, P.E. 59848
NYSPE LICENSE #

ASSISTANT TEAM LEADER Jeffrey M. Reina, P.E.
ASSISTANT TEAM LEADER Logan Bessel
ASSISTANT TEAM LEADER Jerome Getter

FEATURE CARRIED I - 690
FEATURE CROSSED Van Rensselaer Street

DATE FIELD WORK BEGAN January 13, 2014
DATE FIELD WORK COMPLETED January 15, 2014

TABLE OF CONTENTS

- TP 349 & 350
- IN-DEPTH CONDITION DOCUMENTATION
- IN-DEPTH PHOTO DOCUMENTATION
- ASBESTOS REPORT

TP 349 & TP 350

BRIDGE ELEMENT RATINGS

Inspection Date: 3/19/2012 RC: 33 BIN: 1053969

Bridge Ratings

Carried: 690I 690I33012017 Crossed: VAN RENSSELAER ST CheckValue: 1,778,511,061

Inspection Agency: 10 - NYSDOT Type of Inspection: 1 - BIENNIAL
GTMS: 302 -- Steel - Stringer/Multi-Beam or Girder
POSTINGS: See Gen Rec Page 1 for Postings at time of inspection.
Further Investigation Needed: No
State Highway Number: 66-5 Milepoint: 8.38 AADT/Yr: 64204 / 2002
Orientation: 3 - East Political Unit: 2055 - City of SYRACUSE Year Built: 1968
Total Spans: 1 Ramp Bridge Attached To Span: NA BIN: NA
General Recommendation: 5 Computed Condition Rating: 4.938

Abutment Ratings:	**Beg Abut**	**End Abut**
Joint with Deck	8	5
Bearings, Bolts, Pads	4	4
Seats and Pedestals	5	5
Backwall	5	5
Stem (Breastwall)	5	5
Erosion or Scour	6	6
Footings	9	9
Piles	9	9
Recommendation	5	5

Wingwall Ratings:	**Beg Abut**	**End Abut**
Walls	5	6
Footings	9	9
Erosion or Scour	6	6
Piles	9	9

Channel Ratings:	**Channel**
Stream Alignment	8
Erosion and Scour	8
Waterway Opening	8
Bank Protection	8

Approach Ratings:	**Approaches**
Drainage	6
Embankment	6
Settlement	5
Erosion	6
Pavement	5
Guide Railing	5

Number of Flags Issued:

RED: 0 Yellow: 0 Safety: 0

Vulnerability Reviews Recommended: 1=Yes, 2=No, 3=NA, X=NotActive

Hydraulic: 3	Overload: X	Steel: 2
Collision: 2	Concrete: X	Seismic: X

Inspector's Signature: CheckValue: 1,778,511,061 Date: 3/19/2012

David Hann,PE () (Inspector ID:3000055)

Signed copy of this inspection report is available in the appropriate NYSDOT Regional Office

Reviewed By: Date: 5/7/2012

James R. Manning,PE () (QC ID:3000023)

Signed copy of this inspection report is available in the appropriate NYSDOT Regional Office

Inspection Date: 3/19/2012 RC: 33 BIN: 1053969

Span Ratings

Carried: 690I 690I33012017 Crossed: VAN RENSSELAER ST CheckValue: 1,778,511,061

Deck Element Ratings:	**001**
Wearing Surface	4
Curbs	4
Sidewalks, Fascias	5
Railings, Parapets	4
Scuppers	8
Gratings	8
Median	5
Mono Deck Surface	5

Superstructure Ratings:	**001**
Structural Deck	4
Primary Members	6
Secondary Members	6
Paint	5
Joints	8
Recommendation	5

Pier Ratings:	**001**
Bearings, Bolts, Pads	8
Pedestals	8
Top of Cap or Beam	8
Stem Solid Pier	8
Cap Beam	8
Pier Columns	8
Footings	8
Erosion or Scour	8
Piles	8
Recommendation	8

Utility Ratings:	**001**
Lighting	4
Sign Structure	5
Utilities and Support	8

Field Notes:

Field Date	Arrival	Departure	Temp (C)	Temp (F)	Weather Conditions
3/19/2012	2:15:00 PM	5:15:00 PM		70	Partly cloudy

IN-DEPTH CONDITION DOCUMENTATION

IN DEPTH INSPECTION REPORT

BIN 1053969

Visual Inspection

The bridge was built in 1968 with a major rehabilitation in 1984. During the 1984 rehabilitation miscellaneous concrete repairs were made to the abutments and piers under contract D500057. Superstructure repairs included painting structural steel, concrete bridge deck overlay, and deck joint replacement. Miscellaneous joint repairs were made to the deck and approach slabs in 1995 under contract D256745.

Cracks, spalls, and other field observations are shown on the plans. Below is a brief summary of conditions for each feature.

Superstructure

Deck – See Bridge Deck Evaluation Report

Steel – See Structural Steel Inspection Summary

Bearings – Bearing elements typically have rust scale, with the outer bearings typically exhibiting heavier rust.

Substructure

West Abutment – The concrete backwall and stem contained minor isolated areas of delaminated concrete and cracking. Pedestal locations 14 and 16 exhibited delamination and spalling. Pedestal 6 had moisture staining and full height cracks in the stem and backwall on either side. The backwall in between pedestals 8 and 9 showed moisture and there is a full height crack behind pedestal 9 in the stem and backwall. The southwest wingwall contained an 8’ long crack and the northwest wingwall had a section of delaminated concrete in the upper section.

East Abutment – The concrete backwall and pedestals contained minor isolated areas of delaminated concrete and cracking throughout the wall. The stem exhibited delaminated concrete, mostly on the upper section, below

pedestals 1 to 6 and 15 to 16. The backwall between pedestals 8 and 9 had moisture staining. The wingwalls both contained minor isolated areas of delaminated concrete and cracking.

STRUCTURAL STEEL INSPECTION SUMMARY

BIN 1053969

Special Emphasis Inspection Required

Non-Redundant/Fracture Critical Members – No

Pin and Hangers – No

Fatigue-Prone Welds – Yes

Non-Categorized Fatigue-Prone Details – No

Other (Specified in Text) – No

Special Emphasis Details

Cover plate welds: 100% hands-on inspection performed.

Overall Steel Condition

The bottom flanges of the fascia girders have widespread rust and delaminated paint with isolated pockets of rust and section loss.

Paint

The paint along several of the lower flange sides of the girders and along the right web of girder 16 was cracked and flaking off.

Section Loss

The web of girder 16 was checked in two locations. At 7.5' from the west end the web thickness was measured at 0.55" and the bottom flange at 0.75". In the east corner the web was measured at 0.25".

Due to the age of the steel, a blanket 5% section loss should be used on the bottom flange and lower 6 inches of the web of the fascia girder in load rating. The interior girders should be evaluated with 5% section loss of the bottom flange.

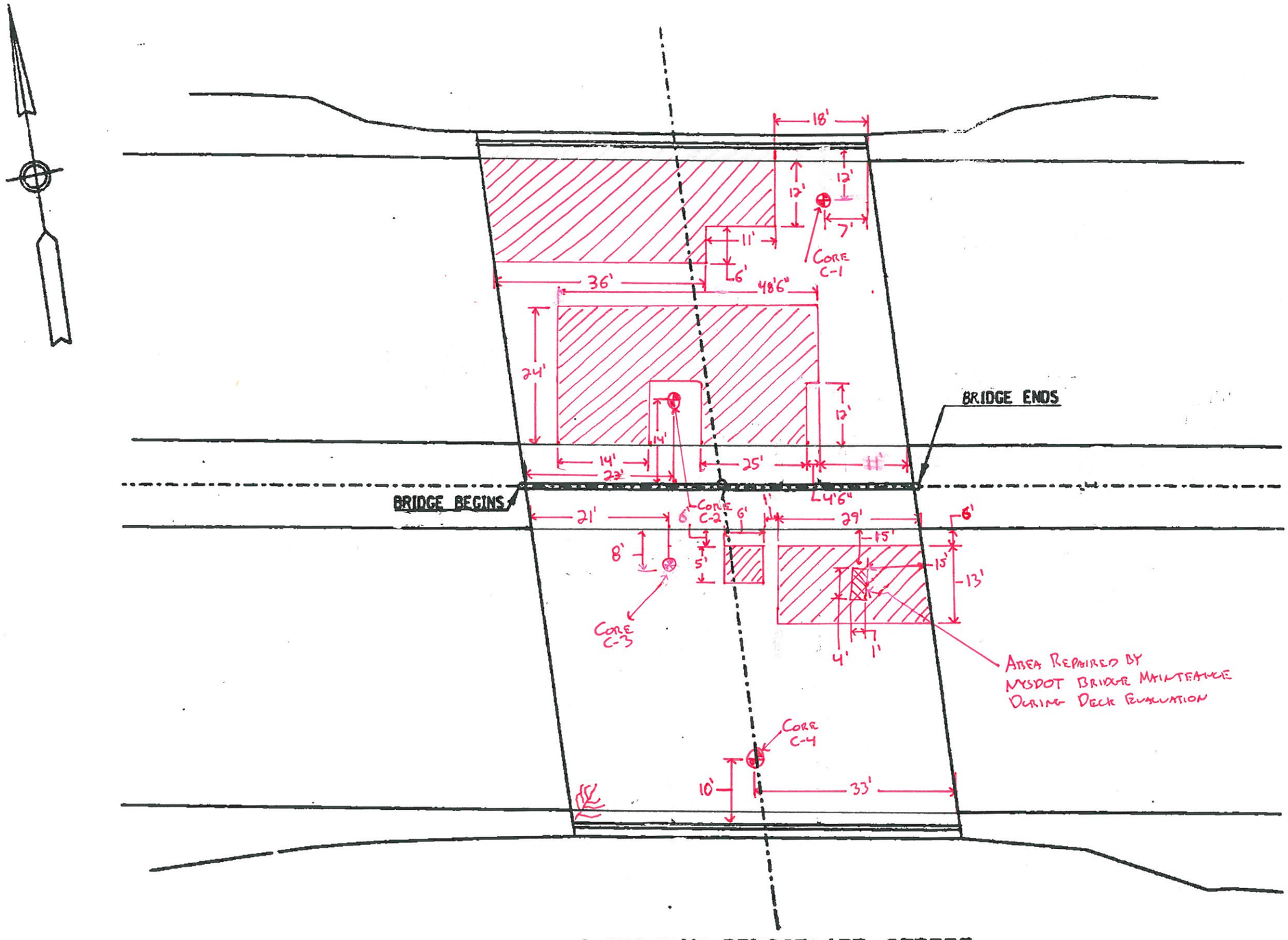

I-690/VAN RENSSELAER STREET

PLAN VIEW

BIN 1053969
DECK EVALUATION

F.I.C 66-5

FED. ROAD REG. NO.	STATE OF	FED. AID PROJ. NO.	SHEET NO.	TOTAL SHEETS
1	N.Y.	I-690-3 (19) U-446 (13)	20dR	320

INTERSTATE ROUTE CONNECTION 570
F. A. I. 690-1-3.0
BEAR STREET - CLINTON STREET
CITY OF SYRACUSE

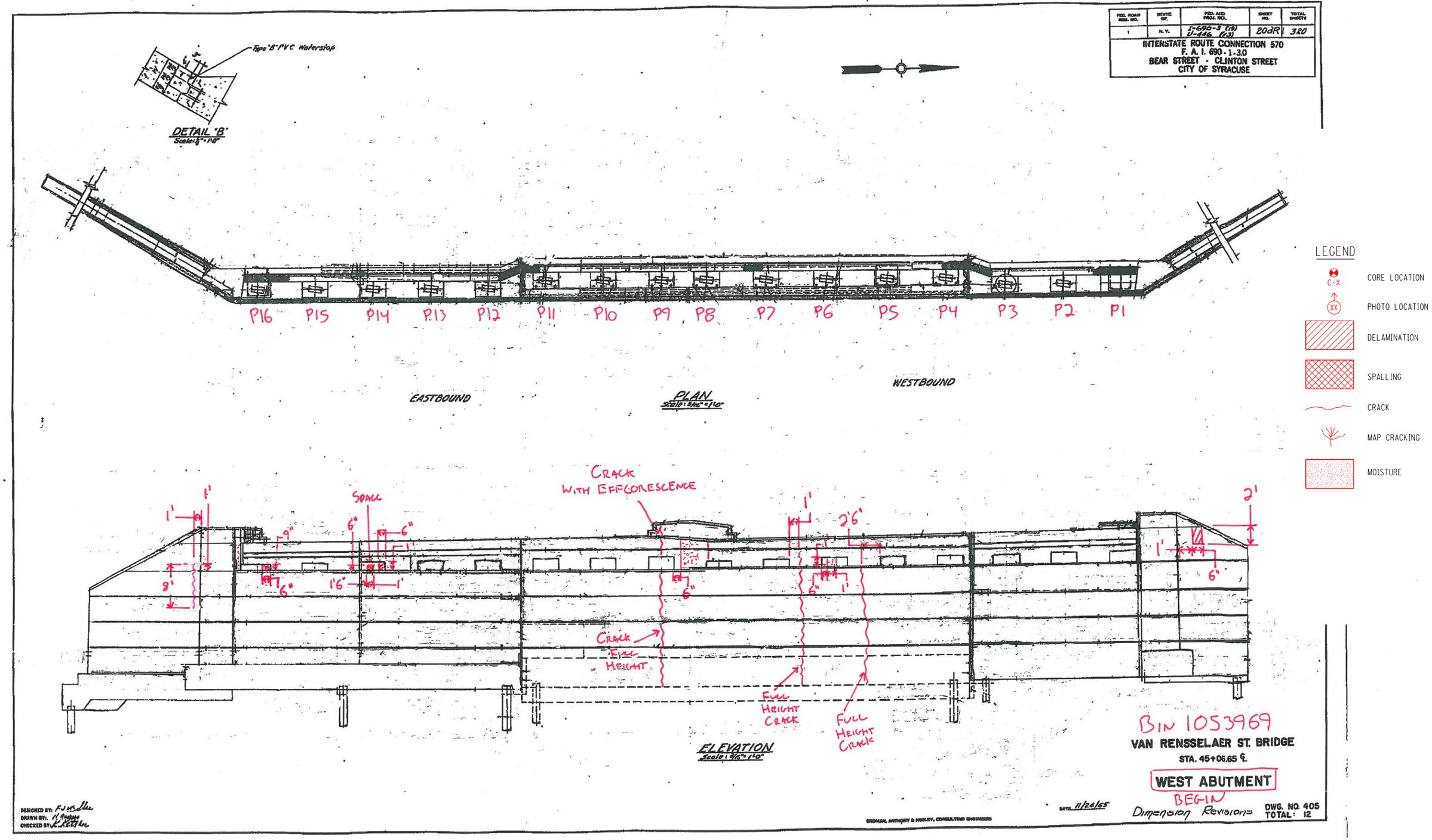

STRUCTURAL STEEL
UNDERSIDE OF DECK

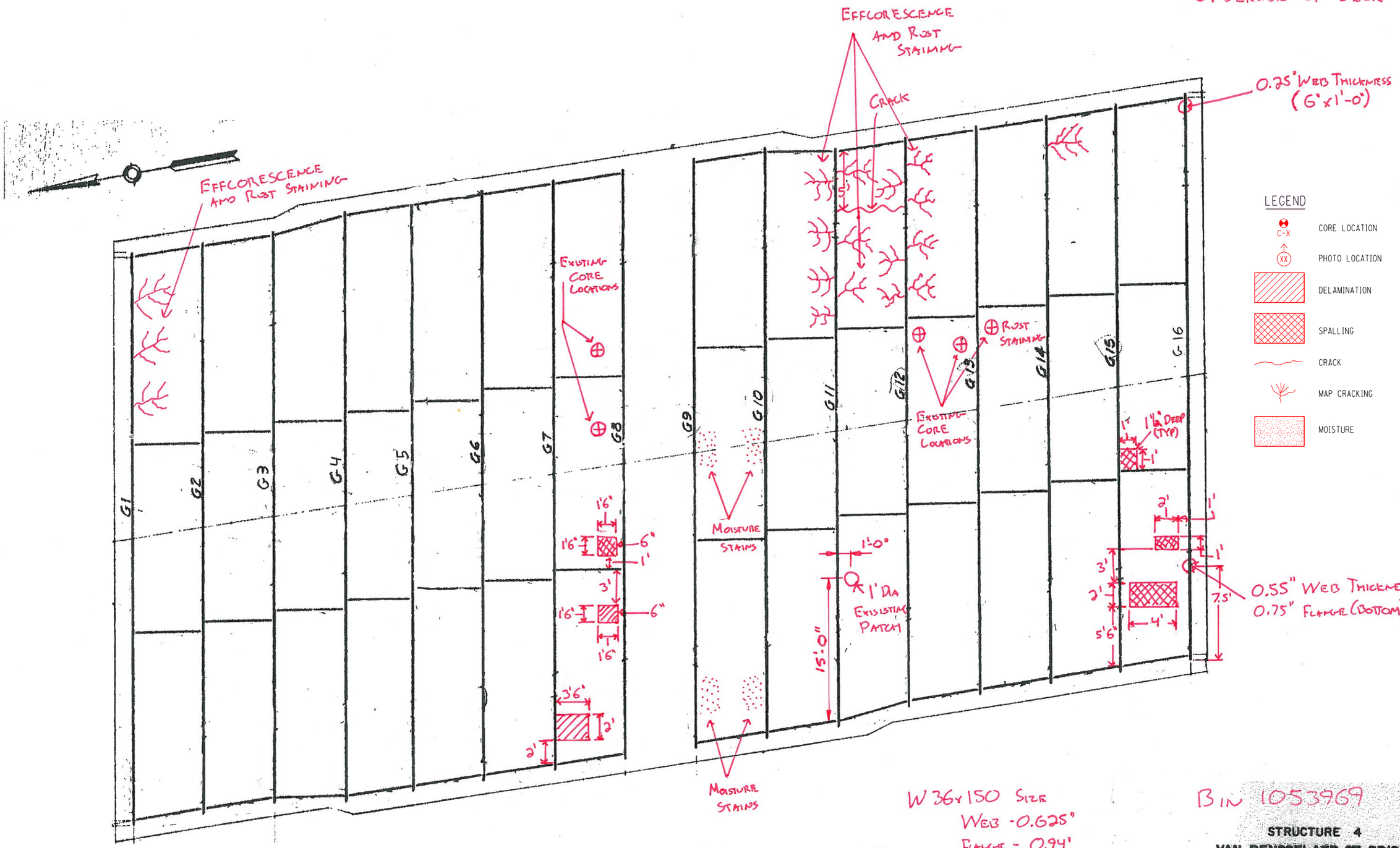

LEGEND

- C-X — CORE LOCATION
- (XX) — PHOTO LOCATION
- DELAMINATION
- SPALLING
- CRACK
- MAP CRACKING
- MOISTURE

W 36x150 SIZE
WEB - 0.625"
FLANGE - 0.94"

BIN 1053969

STRUCTURE 4
VAN RENSSELAER ST. BRIDGE
STA. 454+05.65 ℄

FRAMING PLAN

DATE 11/24/65

DWG. NO. 410
TOTAL 12

F.I.C 66-5

FED. ROAD REG. NO.	STATE OF	FED. AID PROJ. NO.	SHEET NO.	TOTAL SHEETS
1	N.Y.	I-690-3 (19) U-446 (13)	207R1	320

INTERSTATE ROUTE CONNECTION 570
F. A. I. 690-1-3.0
BEAR STREET - CLINTON STREET
CITY OF SYRACUSE

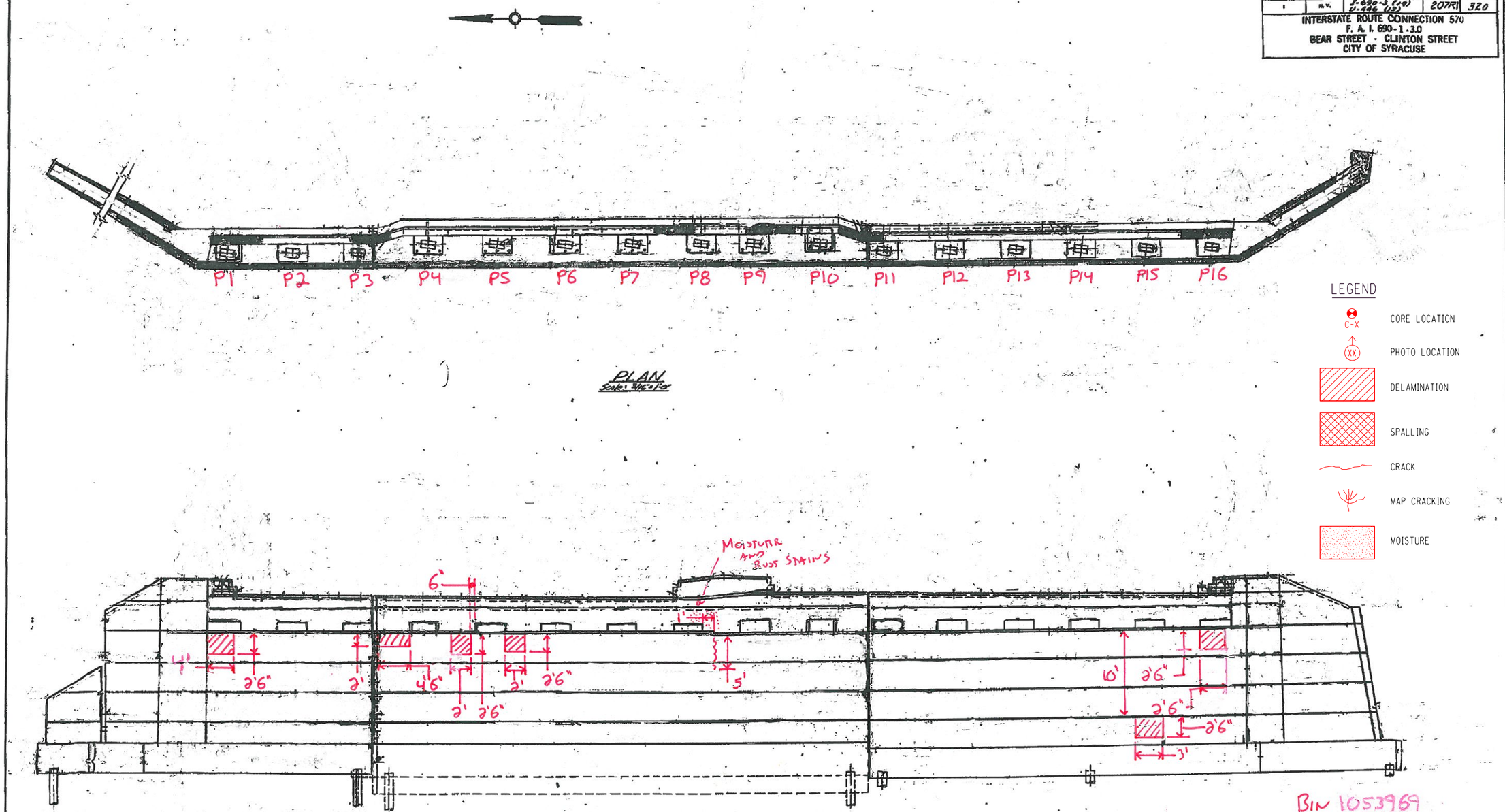

LEGEND

- CORE LOCATION (C-X)
- PHOTO LOCATION (XX)
- DELAMINATION
- SPALLING
- CRACK
- MAP CRACKING
- MOISTURE

BIN 1053969

VAN RENSSELAER ST. BRIDGE
STA. 45+06.65 ℄

EAST ABUTMENT

END

DESIGNED BY: F. J. [illegible]
DRAWN BY: H. [illegible]
CHECKED BY: K. [illegible]

DATE 11/24/65

Dimension Revisions

DWG. NO. 404
TOTAL: 12

GROMAN, ANTHONY & HOSLEY, CONSULTING ENGINEERS

IN-DEPTH PHOTO DOCUMENTATION

C&S Engineers, Inc.
499 Col. Eileen Collins Blvd.
Syracuse, New York 13212
Phone: (315) 455-2000
Fax: (315) 455-9667
www.cscos.com

I-690 over Van Rensselaer St - BIN 1053969



DESCRIPTION: WEST ABUTMENT – PEDESTAL 3 – TYPICAL CONCRETE

PHOTO 1



DESCRIPTION: WEST ABUTMENT – BEARING 3 – TYPICAL RUST

PHOTO 2

ID Numbers in Photo's is for field use only.

C&S Engineers, Inc.
499 Col. Eileen Collins Blvd.
Syracuse, New York 13212
Phone: (315) 455-2000
Fax: (315) 455-9667
www.cscos.com

I-690 over Van Rensselaer St - BIN 1053969



DESCRIPTION: WEST ABUTMENT – PEDESTAL 6 – MOISTURE

PHOTO 3



DESCRIPTION: WEST ABUTMENT – BETWEEN PEDESTALS 8 AND 9 – MOISTURE ON BACKWALL AND CRACK WITH EFFLORESCENCE

PHOTO 4

ID Numbers in Photo's is for field use only.

C&S Engineers, Inc.
499 Col. Eileen Collins Blvd.
Syracuse, New York 13212
Phone: (315) 455-2000
Fax: (315) 455-9667
www.cscos.com

I-690 over Van Rensselaer St - BIN 1053969



DESCRIPTION: WEST ABUTMENT – PEDESTAL 14 – SPALLING CONCRETE

PHOTO 5



DESCRIPTION: WEST ABUTMENT – PEDESTAL 16 – SPALLING CONCRETE

PHOTO 6

ID Numbers in Photo's is for field use only.

C&S Engineers, Inc.
499 Col. Eileen Collins Blvd.
Syracuse, New York 13212
Phone: (315) 455-2000
Fax: (315) 455-9667
www.cscos.com

I-690 over Van Rensselaer St - BIN 1053969



DESCRIPTION: WEST ABUTMENT – PEDESTAL 16 – BACKWALL MOISTURE

PHOTO 7



DESCRIPTION: SOUTHWEST ABUTMENT – FACING NORTH - CRACK

PHOTO 8

ID Numbers in Photo's is for field use only.

C&S Engineers, Inc.
499 Col. Eileen Collins Blvd.
Syracuse, New York 13212
Phone: (315) 455-2000
Fax: (315) 455-9667
www.cscos.com

I-690 over Van Rensselaer St - BIN 1053969



DESCRIPTION: WEST ABUTMENT FACING EAST – BETWEEN PEDESTALS 8 AND 9 – JOINT BETWEEN CONCRETE DECK

PHOTO 9



DESCRIPTION: WEST ABUTMENT FACING EAST – GIRDER 11 – PREVIOUS CORE LOCATION PATCH

PHOTO 10

ID Numbers in Photo's is for field use only.

C&S Engineers, Inc.
499 Col. Eileen Collins Blvd.
Syracuse, New York 13212
Phone: (315) 455-2000
Fax: (315) 455-9667
www.cscos.com

I-690 over Van Rensselaer St - BIN 1053969



DESCRIPTION: UNDERSIDE OF DECK – FACING WEST ABUTMENT – BETWEEN GIRDERS 15 AND 16 - SPALLING

PHOTO 11



DESCRIPTION: UNDERSIDE OF DECK – FACING EAST – BETWEEN GIRDERS 15 AND 16 - SPALLING

PHOTO 12

ID Numbers in Photo's is for field use only.

C&S Engineers, Inc.
499 Col. Eileen Collins Blvd.
Syracuse, New York 13212
Phone: (315) 455-2000
Fax: (315) 455-9667
www.cscos.com

I-690 over Van Rensselaer St - BIN 1053969



DESCRIPTION: BAY 1 – NORTHEAST CORNER – FACING WEST – MAP CRACKING

PHOTO 13



DESCRIPTION: EAST ABUTMENT FACING WEST – BETWEEN PEDESTALS 8 AND 9 – JOINT BETWEEN CONCRETE DECK

PHOTO 14

ID Numbers in Photo's is for field use only.

C&S Engineers, Inc.
499 Col. Eileen Collins Blvd.
Syracuse, New York 13212
Phone: (315) 455-2000
Fax: (315) 455-9667
www.cscos.com

I-690 over Van Rensselaer St - BIN 1053969



DESCRIPTION: BAY 9 AT EAST ABUTMENT– FACING WEST – MAP CRACKING NEAR GIRDER 11

PHOTO 15



DESCRIPTION: BAY 10 AT EAST ABUTMENT– FACING WEST – MAP CRACKING BETWEEN 11 AND 12

PHOTO 16

ID Numbers in Photo's is for field use only.

C&S Engineers, Inc.
499 Col. Eileen Collins Blvd.
Syracuse, New York 13212
Phone: (315) 455-2000
Fax: (315) 455-9667
www.cscos.com

I-690 over Van Rensselaer St - BIN 1053969



DESCRIPTION: BAY 11 AT EAST ABUTMENT– FACING WEST – MAP CRACKING BETWEEN 12 AND 13

PHOTO 17



DESCRIPTION: EAST ABUTMENT – PEDESTAL 1 – DELAMINATED CONCRETE IN STEM WITH EXPOSED REBAR

PHOTO 18

ID Numbers in Photo's is for field use only.

C&S Engineers, Inc.
499 Col. Eileen Collins Blvd.
Syracuse, New York 13212
Phone: (315) 455-2000
Fax: (315) 455-9667
www.cscos.com

I-690 over Van Rensselaer St - BIN 1053969



DESCRIPTION: EAST ABUTMENT – BETWEEN PEDESTALS 3 AND 4 – DELAMINATION IN STEM CONCRETE

PHOTO 19



DESCRIPTION: EAST ABUTMENT – BETWEEN PEDESTALS 4 AND 5 – DELAMINATION IN STEM CONCRETE

PHOTO 20

ID Numbers in Photo's is for field use only.

C&S Engineers, Inc.
499 Col. Eileen Collins Blvd.
Syracuse, New York 13212
Phone: (315) 455-2000
Fax: (315) 455-9667
www.cscos.com

I-690 over Van Rensselaer St - BIN 1053969



DESCRIPTION: EAST ABUTMENT – BETWEEN PEDESTALS 5 AND 6 – DELAMINATION IN STEM CONCRETE

PHOTO 21



DESCRIPTION: EAST ABUTMENT – BACKWALL – BETWEEN PEDESTALS 8 AND 9 – MOISTURE AND RUST STAINS

PHOTO 22

ID Numbers in Photo's is for field use only.

C&S Engineers, Inc.
499 Col. Eileen Collins Blvd.
Syracuse, New York 13212
Phone: (315) 455-2000
Fax: (315) 455-9667
www.cscos.com

I-690 over Van Rensselaer St - BIN 1053969



DESCRIPTION: EAST ABUTMENT – PEDESTAL 10 – TYPICAL CONCRETE

PHOTO 23



DESCRIPTION: EAST ABUTMENT – BEARING 15 – TYPICAL RUST

PHOTO 24

ID Numbers in Photo's is for field use only.

C&S Engineers, Inc.
499 Col. Eileen Collins Blvd.
Syracuse, New York 13212
Phone: (315) 455-2000
Fax: (315) 455-9667
www.cscos.com

I-690 over Van Rensselaer St - BIN 1053969

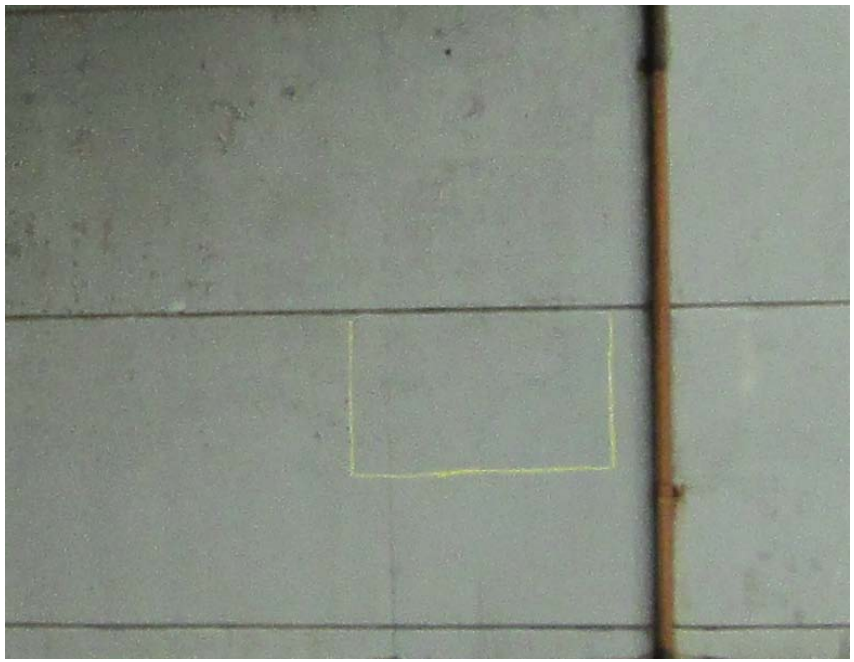

DESCRIPTION: EAST ABUTMENT – STEM – UNDER PEDESTAL 15 – DELAMINATED CONCRETE

PHOTO 25



DESCRIPTION: EAST ABUTMENT – STEM – UNDER PEDESTAL 16 – DELAMINATED CONCRETE

PHOTO 26

ID Numbers in Photo's is for field use only.

C&S Engineers, Inc.
499 Col. Eileen Collins Blvd.
Syracuse, New York 13212
Phone: (315) 455-2000
Fax: (315) 455-9667
www.cscos.com

I-690 over Van Rensselaer St - BIN 1053969



DESCRIPTION: GIRDER 16 – SOUTHEAST CORNER NEAR EAST ABUTMENT PEDESTAL 16 – STEEL CONDITION

PHOTO 27



DESCRIPTION: GIRDER 16 – SOUTHWEST CORNER NEAR WEST ABUTMENT PEDESTAL 16 – MIDWAY ACROSS FIRST BAY – STEEL CONDITION

PHOTO 28

ID Numbers in Photo's is for field use only.

C&S Engineers, Inc.
499 Col. Eileen Collins Blvd.
Syracuse, New York 13212
Phone: (315) 455-2000
Fax: (315) 455-9667
www.cscos.com

I-690 over Van Rensselaer St - BIN 1053969



DESCRIPTION: NORTHWEST WINGWALL – FACING WEST

PHOTO 29



DESCRIPTION: WEST ABUTMENT – FACING NORTHWEST

PHOTO 30

ID Numbers in Photo's is for field use only.

C&S Engineers, Inc.
499 Col. Eileen Collins Blvd.
Syracuse, New York 13212
Phone: (315) 455-2000
Fax: (315) 455-9667
www.cscos.com

I-690 over Van Rensselaer St - BIN 1053969



DESCRIPTION: SOUTHWEST WINGWALL – FACING WEST

PHOTO 31



DESCRIPTION: SOUTHEAST WINGWALL – FACING EAST

PHOTO 32

ID Numbers in Photo's is for field use only.

C&S Engineers, Inc.
499 Col. Eileen Collins Blvd.
Syracuse, New York 13212
Phone: (315) 455-2000
Fax: (315) 455-9667
www.cscos.com

I-690 over Van Rensselaer St - BIN 1053969



DESCRIPTION: EAST ABUTMENT – FACING NORTHEAST

PHOTO 33



DESCRIPTION: NORTHEAST WINGWALL – FACING EAST

PHOTO 34

ID Numbers in Photo's is for field use only.

C&S Engineers, Inc.
499 Col. Eileen Collins Blvd.
Syracuse, New York 13212
Phone: (315) 455-2000
Fax: (315) 455-9667
www.cscos.com

I-690 over Van Rensselaer St - BIN 1053969



DESCRIPTION: NORTH EDGE FACIA – FACING SOUTHEAST

PHOTO 35



DESCRIPTION: SOUTH EDGE FACIA – FACING NORTHEAST

PHOTO 36

ID Numbers in Photo's is for field use only.

C&S Engineers, Inc.
499 Col. Eileen Collins Blvd.
Syracuse, New York 13212
Phone: (315) 455-2000
Fax: (315) 455-9667
www.cscos.com

I-690 over Van Rensselaer St - BIN 1053969



DESCRIPTION: WESTBOUND DECK – BEGIN APPROACH FACING EAST

PHOTO 37



DESCRIPTION: EASTBOUND DECK – END APROACH FACING WEST

PHOTO 38

ID Numbers in Photo's is for field use only.

C&S Engineers, Inc.
499 Col. Eileen Collins Blvd.
Syracuse, New York 13212
Phone: (315) 455-2000
Fax: (315) 455-9667
www.cscos.com

I-690 over Van Rensselaer St - BIN 1053969



DESCRIPTION: UNDERDECK – FACING NORTH

PHOTO 39



DESCRIPTION: ELEVATION – NORTH FACE – FACING SOUTH

PHOTO 40

ID Numbers in Photo's is for field use only.

BIN 1053969
PHOTO LOC MAP

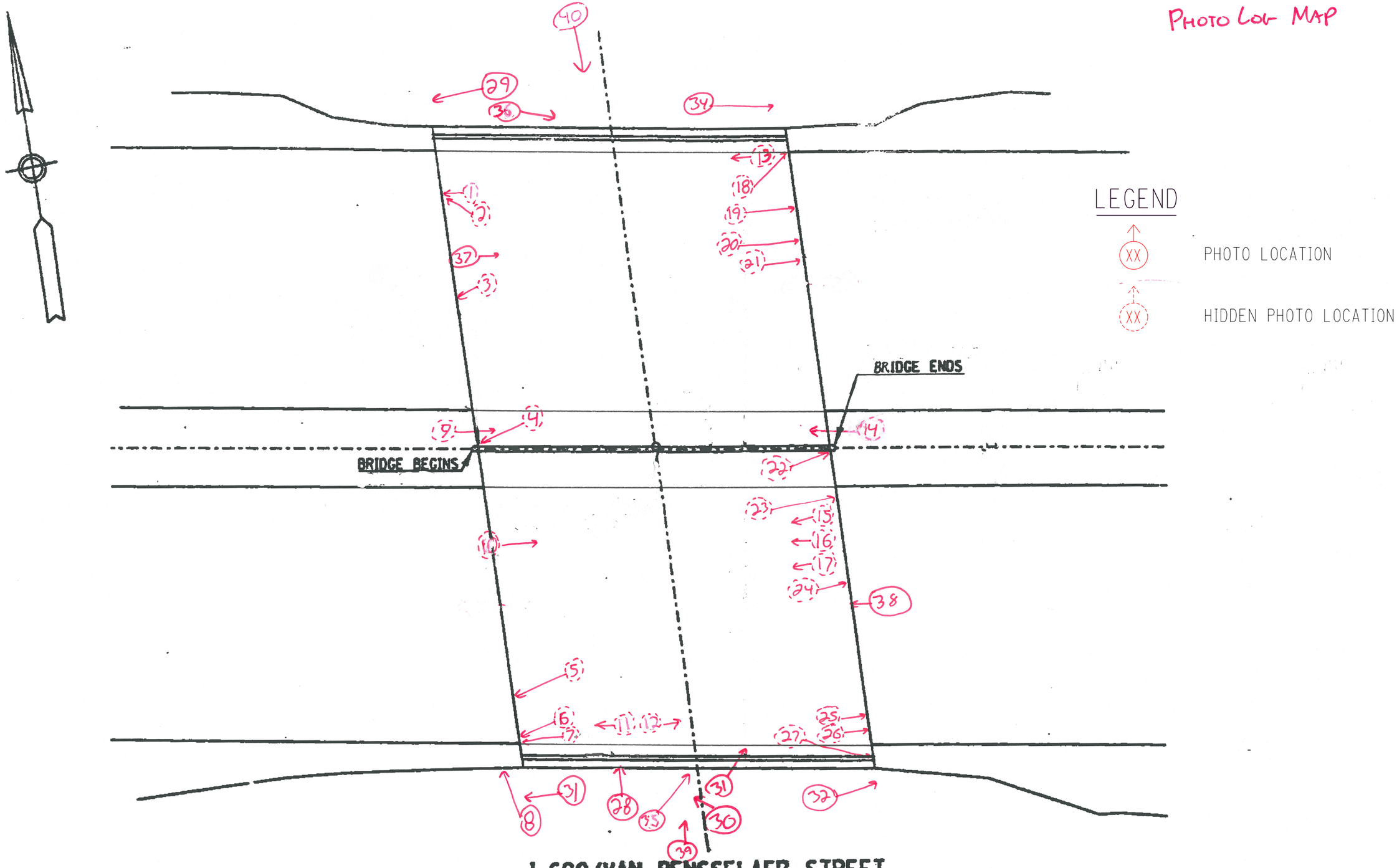

I-690/VAN RENSSELAER STREET

PLAN VIEW

ASBESTOS DOCUMENTATION

ASBESTOS DOCUMENTATION FROM WATTS ARCHITECTURE & ENGINEERING, INC.

(WILL REPLACE BIN FOLDER ASBESTOS REPORT UPON COMPLETION)

ATHENICA
ENVIRONMENTAL SERVICES INC.
Tel (718) 784-7490
Fax (718) 784-4085

3

BULK (NOB) ASBESTOS ANALYSIS BY POLARIZED LIGHT MICROSCOPY AND TRANSMISSION ELECTRON MICROSCOPY

CLIENT: NYS DOT, Region 3
LABORATORY ID #: 04-04-150
DATES OF ANALYSIS: 04/29/04

PROJECT: Bin # 1053969
ANALYT. METHODOLOGIES: ELAP 198.1, ELAP 198.4
DATE OF REPORT: 04/30/04

LABORATORY RESULTS

CLIENT #	LAB. ID #	LOCATION	%ORG	%ASI	%AII	PLM RESULTS	TYPE OF ASBEST.	TEM RESULTS	TYPE OF ASBEST.	POSIT. / NEGAT.
01	04-04-150-01	Steel paint coat girder 2 @begin abutment	22.30	16.58	61.12	**ND**	NA	**ND**	NA	**Negat.**
02	04-04-150-02	Steel paint coat girder 5 @end abutment	42.42	0.20	57.39	**ND**	NA	**ND**	NA	**Negat.**
03	04-04-150-03	Steel paint coat girder 9 @end abutment	25.81	11.65	62.54	**ND**	NA	**Trace**	NA	**Negat.**

ANALYST
E. Sioukri

LABORATORY DIRECTOR
Spiro Dongaris

LABORATORY CERTIFICATION NUMBERS: NVLAP 101958, ELAP 10955

- Athenica Environmental Services Inc. (AES), is responsible only for information pertaining to samples taken by its employees.
- Samples will be stored for sixty (60) days. AES Inc., should be notified within this time frame for a true duplicate analysis.
- The report relates only to items tested. This report must not be used to claim product endorsement by NVLAP or any other agency of the U.S. Government. Test reports may not be reproduced except in full and with prior approval of AES Inc.
- The liability of Athenica Environmental Services Inc. with respect to the services charged, shall in no event exceed the amount of the invoice.

ATHENICA
ENVIRONMENTAL SERVICES INC.
45-09 GREENPOINT AVENUE
LONG ISLAND CITY, NY 11104
Tel. (718) 784-7490
Fax. (718) 784-4085

CLIENT: NYS DOT / REG. 3
SITE: BIN # 1053969
PROJECT NO. (ATHENICA FILE#): C003314
DATE: 4/20/~~2003~~ 2004
METHOD OF SHIPMENT: U.S. MAIL
INSPECTOR: W.A. Kick

NUMBER OF SAMPLES: 3
TYPE OF ANALYSIS REQUESTED: [ ] PLM [X] NOB-PLM [X] NOB-TEM [ ] OTHERS
TURNAROUND TIME: [ ] 6 HRS [ ] 12 HRS [ ] 24 HRS [X] OTHER HRS

COMMENTS: ATT: CHRISTOPHER ANDERSON
333 E. WASHINGTON ST. SYRACUSE, N.Y. 13202

HOM. AREA	SAMLPLE #	SAMPLE DESCRIPTION	SAMPLE LOCATION	FIELD COMMENTS	LABORATORY RESULTS		
					PLM	PLM-NOB	TEM-NOB
1053969	01	STEEL PAINT COAT	GIRDER 2 @ Beg. Abut				
"	02	"	GIRDER 5 @ END Abut				
"	03	"	" 9 " "				

TRANSMITTAL OF RESULTS:
[X] STANDARD
[ ] TELEPHONE RESULTS TO
[ ] FAX RESULTS TO

TELEPHONE #: (315) 428-4628
FAX #:

BATCH #: 04-04-150

CHAIN OF CUSTODY RECORD

RELINQUISHED BY:	W.A. Kick	DATE:	4/20/~~2003~~ 2004	TIME:	10 A.M.
RECEIVED BY:	[illegible]	DATE:	4/26/2004	TIME:	
ANALYST:	[illegible]	DATE:	4/29/2004	TIME:	

LABORATORY ACCREDITATION:
NVLAP# 101958 ELAP# 10955

NEW YORK STATE
DEPARTMENT OF TRANSPORTATION
D031085 P.I.N 3501.60

LEVEL 1 LOAD RATING
B.I.N. 10503969
I-690 EB & WB over Van Rensselaer Street

LOAD RATING SUMMARY TABLE (LOAD FACTOR)					
CONTROLLING MEMBER	**CONTROLLING PARAMETER**	**LIVE LOAD**	**LIVE LOAD TYPE**	**INVENTORY RATING**	**OPERATING RATING**
WB (G2) INTERIOR GIRDER	SERVICE	HS20-44	Axle Load	HS 31.58 (56.8 TONS)	HS 52.7 (94.9 TONS)
WB (G2) INTERIOR GIRDER	SERVICE	ALTERNATE MILITARY LOADING	Axle Load	1.913 (45.9 TONS)	3.195 (76.6 TONS)

DOES NOT INCLUDE FUTURE WEARING COURSE

ANALYSIS METHOD:LOAD FACTOR

RECOMMENDED POSTING AS-IS CONDITION: _____ Tons __X__ None

CALCULATED BY:



DATE: 5-3-2014

QUALITY ASSURANCE BY:



DATE: 5-3-2014

C&S COMPANIES

499 Col. Eileen Collins Blvd.
Syracuse, NY 13212
phone 315-455-2000
fax 315-455-9667
www.cscos.com

ENGINEERS
DESIGN BUILD
TECHNICAL RESOURCES
OPERATIONS

C&S Companies

C&S Engineers, Inc.
Syracuse Hancock International Airport
Syracuse, NY 13212
phone 315-455-2000
fax 315-455-9667
www.cscos.com

TECHNICAL MEMORANDUM

TO: FILE (190.514.001)

FROM: JESSICA S. BAUER, P.E.
NYSPE 084915

DATE: FEBRUARY 5, 2014

C&S PROJECT NO.: 190.514.001

RE: SEISMIC ASSESSMENT SUMMARY
NEW YORK STATE DEPARTMENT OF TRANSPORTATION
D031085; PIN 3501.60; I-81

BIN: 1053969 Seismic Assessment

This memorandum summarizes the seismic assessment conducted for BIN 1053969 as part of the Interstate 81 Project in Syracuse, NY. The purpose of the assessment is to determine if seismic retrofits are warranted at the superstructure to substructure connection, and if further seismic evaluation of the structure is required. This memorandum will give the assessment results, retrofits required and recommendations for further seismic evaluation of the structure.

ASSESSMENT PROCEDURE

The seismic assessment was performed in accordance with the FHWA Seismic Retrofitting Manual for Highway Structures: Part 1 - Bridges, January 2006. As per the referenced manual, seismic assessment was performed for both lower level and upper level earthquake ground motion. The lower level earthquake ground motion has a reasonable likelihood of occurrence within the life of the bridge (50% probability of exceedance within a 75 year bridge life). The upper level earthquake ground motion has a finite likelihood of occurrence within the life of the bridge (7% probability of exceedance within a 75 year bridge life).

Values for the spectral acceleration for the Syracuse area used in the assessment are as follows:

- Lower Level Earthquake Ground Motion for a Short Period (0.2 seconds): $S_S = 0.0251$
- Lower Level Earthquake Ground Motion for a Long Period (1.0 seconds): $S_1 = 0.0076$
- Upper Level Earthquake Ground Motion for a Short Period (0.2 seconds): $S_S = 0.139$
- Upper Level Earthquake Ground Motion for a Long Period (1.0 seconds): $S_1 = 0.047$

These values are considered constant and are the same for all seismic assessments of bridges in the Syracuse area.

The Site Class is based on the soil conditions at the bridge location. It was determined that this parameter has little effect on the results of the seismic assessment because the spectral

You created this PDF from an application that is not licensed to print to novaPDF printer (http://www.novapdf.com)

acceleration values for the Syracuse area are small. Based on this, a site class of D was used for all seismic assessments of bridges in the Syracuse area.

Bridge parameters used in the seismic assessment were retrieved from the record drawings and WinBolts data.

The seismic assessment takes into account the anticipated service life, importance, and the seismic exposure of the bridge to determine a seismic retrofit category (SRC). The SRC is then used to determine seismic evaluation methods and retrofit measures. There are four SRCs, A through D. Seismic retrofit category A is the lowest category; bridges in this category do not require retrofits or further seismic evaluation. Seismic retrofit category D is the highest category; bridges in this category requiring the most rigorous seismic evaluations and retrofits.

ASSESSMENT RESULTS

The SRC for the bridge is "**C**" for lower level earthquake ground motion and "**B**" for upper level earthquake ground motion.

RETROFITS REQUIRED

Bearing replacements and seat width improvements are not required at the abutments. Additional retrofits may be required if further seismic evaluation is needed.

RECOMMENDATIONS FOR FURTHER SEISMIC EVALUATION

For the lower level earthquake ground motion, it is recommended that capacity/demand ratios for bridge components are calculated as per Section 5.4 of the referenced manual. For the upper level earthquake ground motion, it is recommended that the capacities of the bearings are checked as per Section 5.2 of the referenced manual.

Retrofit cost estimates will be provided after any further required seismic evaluations are completed.

You created this PDF from an application that is not licensed to print to novaPDF printer (http://www.novapdf.com)

ENGINEERS
DESIGN BUILD
TECHNICAL RESOURCES
OPERATIONS

C&S Companies

C&S Engineers, Inc.
Syracuse Hancock International Airport
Syracuse, NY 13212
phone 315-455-2000
fax 315-455-9667
www.cscos.com

TECHNICAL MEMORANDUM

TO: **FILE (190.514.001)**

FROM: **PAUL BYRNE, P.E.**
NYSPE 055928

DATE: **JUNE 4, 2014**

C&S PROJECT NO.: 190.514.001

RE: **NEW YORK STATE DEPARTMENT OF TRANSPORTATION**
D031085; PIN 3501.60; I-81 Opportunities, BIN 1053969 Fatigue Evaluation

---

This memorandum documents a fatigue evaluation conducted for the existing Interstate 81 Viaduct Project. Existing structures with AASHTO Category D, E, and E' fatigue-prone details require 100% hands-on inspection unless proven to be exempt. The purpose of the evaluation is to assess the remaining life of fatigue-prone components.

EVALUATION PROCEDURES

The fatigue evaluation was performed in accordance with the AASHTO Guide Specification for Fatigue Evaluations of Existing Steel Bridges, 1990. Fatigue-prone welds identified in the biennial inspection reports were located on record drawings and confirmed visually in the field. Additional information concerning fatigue-prone welds located in BIN folders was also obtained and reviewed prior to inspection.

EVALUATION RESULTS

The results of the fatigue evaluation of the existing bridge are shown below. The remaining safe fatigue life of the interior fatigue components and the exterior fatigue components at G8 and G9 have been **exhausted**.

Fatigue Detail Location	Remaining Safe Fatigue Life (Years)	Remaining Mean Fatigue Life (Years)
Span 1, Exterior Girders G1 and G16, End of Bottom Flange Cover Plate	Infinite	Infinite
Span 1, Interior Girders G2, G3, G12 to G15, End of Bottom Flange Cover Plate	-28.66	25.96
Span 1, Interior Girders G4 to G7, End of Bottom Flange Cover Plate	-30.10	18.89
Span 1, Exterior Girder G8, End of Bottom Flange Cover Plate	-23.84	49.67

Fatigue Detail Location	Remaining Safe Fatigue Life (Years)	Remaining Mean Fatigue Life (Years)
Span 1, Exterior Girder G9, End of Bottom Flange Cover Plate	-20.99	63.72
Span 1, Interior Girders G10 and G11, End of Bottom Flange Cover Plate	-28.11	28.68

E. Recommendations

The purpose of this deck evaluation is to document and determine existing conditions of the deck. It will be used as a tool for developing the scope of work and cost estimates for the development and comparison of alternatives for the overall project.

The total damaged area is approximately 34% of the total deck area. Due to the age, condition and chloride-ion content of the bridge deck concrete, the bridge deck should be rehabilitated or replaced to meet current design standards and to mitigate excessive future maintenance costs.

Option 1 – Scarify and Bridge Deck Overlay

The maximum service life this option would provide is 25 years. The design life of this project is 30 years (ETC + 30). This option does not meet the project objective of obtaining 30+ years of service life.

Option 2 – Bridge Deck Rehabilitation with 100% Deep Removal

This option will involve partial depth reconstruction with top mat rebar exposure of the entire bridge deck to remove the chloride contaminated concrete (100% deep removal). The existing bridge deck thickness is 9 ¾" with nearly 4" of concrete cover over the top mat of reinforcing. The proposed partial depth reconstruction will provide the standard 9 ½" bridge deck thickness. The existing top mat of reinforcing bars will be removed and replaced to accommodate the standard 3" of concrete cover. The existing non-conforming parapet walls, curbs and railing will be removed and replaced with single-slope concrete barrier. The existing deteriorated bridge joints will be replaced with armorless bridge joints. The Level 1 Load Rating for the final condition was found to be acceptable. This option would provide a service life of 35 years to the bridge deck. The construction cost of this option is $ 0.658 million.

Option 3 – Bridge Deck Replacement with Cast-In-Place Concrete

This option would involve the complete removal of the bridge deck, bridge deck joints, single-slope barrier along the median and the parapet walls down to the existing steel girders. The bridge deck would be replaced with a new concrete deck, single-slope concrete barrier and new armorless bridge joints. The new bridge deck would be 9 ½" standard thickness as compared to the 9 ¾" existing thickness. The Level 1 Load Rating for the final condition was found to be acceptable. This option would provide a service life of 40 years to the bridge deck. The construction cost of this option is $ 0.754 million.

Option 4 – Bridge Deck Replacement with Pre-cast Concrete Deck Panels

This option will have the highest construction cost of all the options; however, traffic control costs may be lower due to the reduced construction time. Comparison of accelerated construction versus conventional construction is beyond the scope of work for this project at this time.

IN DEPTH INSPECTION REPORT

D031085 P.I.N. 3501.60

B.I.N. 1064650

TEAM LEADER	Andrew J. Fuller, P.E.	59848
		NYSPE LICENSE #

ASSISTANT TEAM LEADER	Charles Brooks, P.E.
ASSISTANT TEAM LEADER	Logan Bessel
ASSISTANT TEAM LEADER	Jerome Getter

FEATURE CARRIED	Kinne Road
FEATURE CROSSED	I-481 Northbound and Southbound

DATE FIELD WORK BEGAN	February 2, 2014
DATE FIELD WORK COMPLETED	February 20, 2014

TABLE OF CONTENTS

- TP 349 & 350
- IN-DEPTH CONDITION DOCUMENTATION
- IN-DEPTH PHOTO DOCUMENTATION
- ASBESTOS REPORT

TP 349 & TP 350

BRIDGE ELEMENT RATINGS

Inspection Date: 7/12/2012 RC: 33 BIN: 1064650

Bridge Ratings

Carried: KINNE ROAD Crossed: 481I 481I33012053 CheckValue: 1,783,174,499

Inspection Agency: 10 - NYSDOT Type of Inspection: 1 - BIENNIAL
GTMS: 302 -- Steel - Stringer/Multi-Beam or Girder
POSTINGS: See Gen Rec Page 1 for Postings at time of inspection.
Further Investigation Needed: No
State Highway Number: 000000 Milepoint: 0.84 AADT/Yr: 5641 / 2011
Orientation: 3 - East Political Unit: 0233 - Town of DEWITT Year Built: 1971
Total Spans: 2 Ramp Bridge Attached To Span: NA BIN: NA
General Recommendation: 6 Computed Condition Rating: 4.833

Abutment Ratings:	**Beg Abut**	**End Abut**
Joint with Deck	6	8
Bearings, Bolts, Pads	4	4
Seats and Pedestals	6	4
Backwall	6	5
Stem (Breastwall)	6	5
Erosion or Scour	5	5
Footings	9	9
Piles	8	8
Recommendation	6	4

Wingwall Ratings:	**Beg Abut**	**End Abut**
Walls	6	6
Footings	9	9
Erosion or Scour	6	5
Piles	8	8

Channel Ratings:	**Channel**
Stream Alignment	8
Erosion and Scour	8
Waterway Opening	8
Bank Protection	8

Approach Ratings:	**Approaches**
Drainage	4
Embankment	6
Settlement	4
Erosion	6
Pavement	5
Guide Railing	5

Number of Flags Issued:

RED: 0 Yellow: 0 Safety: 0

Vulnerability Reviews Recommended: 1=Yes, 2=No, 3=NA, X=NotActive

Hydraulic: 3	Overload: X	Steel: 2
Collision: 2	Concrete: X	Seismic: X

Inspector's Signature: CheckValue: 1,783,174,499 Date: 7/12/2012

Bruce Opalka,PE () (Inspector ID:3000038)

Signed copy of this inspection report is available in the appropriate NYSDOT Regional Office

Reviewed By: Date: 8/31/2012

James R. Manning,PE () (QC ID:3000023)

Signed copy of this inspection report is available in the appropriate NYSDOT Regional Office

Inspection Date: 7/12/2012 RC: 33 BIN: 1064650

Span Ratings

Carried: KINNE ROAD **Crossed: 481I 481I33012053** **CheckValue: 1,783,174,499**

Deck Element Ratings:	001	002
Wearing Surface	3	3
Curbs	6	6
Sidewalks, Fascias	4	5
Railings, Parapets	6	6
Scuppers	8	8
Gratings	8	8
Median	8	8
Mono Deck Surface	5	5

Superstructure Ratings:	001	002
Structural Deck	5	5
Primary Members	5	5
Secondary Members	5	5
Paint	4	4
Joints	6	8
Recommendation	5	5

Pier Ratings:	001	002
Bearings, Bolts, Pads	4	8
Pedestals	6	8
Top of Cap or Beam	6	8
Stem Solid Pier	8	8
Cap Beam	6	8
Pier Columns	5	8
Footings	9	8
Erosion or Scour	6	8
Piles	8	8
Recommendation	6	8

Utility Ratings:	001	002
Lighting	8	8
Sign Structure	5	6
Utilities and Support	8	8

Field Notes:

Field Date	Arrival	Departure	Temp (C)	Temp (F)	Weather Conditions
7/5/2012	8:00:00 AM	10:00:00 AM	24	75	sunny
7/12/2012	9:00:00 AM	3:00:00 PM	32	90	Hot Sunny

IN-DEPTH CONDITION DOCUMENTATION

IN DEPTH INSPECTION REPORT

BIN 1064650

Visual Inspection

The bridge was built in 1971 under contract F.I.S.H. 68-4. The bridge deck spot repairs were performed in 1980 under contract D95879. Bridge deck joints were replaced in 2002 under contract D259214.

Cracks, spalls, and other field observations are shown on the plans. Below is a brief summary of conditions for each feature.

Superstructure

Deck – See Bridge Deck Evaluation Report

Steel – See Structural Steel Inspection Summary

Bearings – Bearing elements were newly painted since the 2012 biennial inspection. Bearings typically contained pack rust and did not appear to be functioning as intended.

Substructure

West Abutment – Concrete backwall contained widespread cracking across the entire length and a small spall on the upper left corner above pedestal 1. The stem appeared in good condition with no distressed areas. The deck joint above the abutment appeared to be leaking on the right side above pedestal 5.

Pier – Cap beam contained isolated areas of delaminated concrete. The pedestals contained cracks and spalls.

East Abutment – Concrete back wall contained widespread cracking across the entire length with a spall above pedestal 5. There was salt and ice accumulation on the back wall above pedestal 1. The abutment stem appeared to be generally in good condition with an area of delaminated concrete below pedestal 5.

STRUCTURAL STEEL INSPECTION SUMMARY

BIN 1064650

Special Emphasis Inspection Required

Non-Redundant/Fracture Critical Members – No

Pin and Hangers – No

Fatigue-Prone Welds – Yes

Non-Categorized Fatigue-Prone Details – No

Other (Specified in Text) – No

Special Emphasis Details

100% hands-on inspection performed of gusset plate welds; no cracks were found.

Overall Steel Condition

The steel showed some signs of previous deterioration. Relatively new bridge paint on the fascia girders and all girders in the vicinity of the bearings indicates the steel is not actively deteriorating on a large scale. There were isolated pockets of delaminated paint and rust on the cross frame members. This paint appeared to be older than the paint on the fascia girders. Also, some isolated areas of delaminated paint existed on the interior girders.

Paint

Exterior girders and areas in the vicinity of the bearings were painted since the 2012 biennial bridge inspection. The interior girders appeared to be spot-painted. The newly painted areas appeared to be in good condition.

Section Loss

Due to the age of the steel a blanket 5% section loss should be used in load rating of the girders

BIN 1064650, Kinne Rd, Span 1→2, Plan evaluation



- Sidewalk Covered 1½" of Snow NO evaluation

- JOINTS OK
- Crack along Pavement

- Map Cracking at fascia deck Wingwall end RT

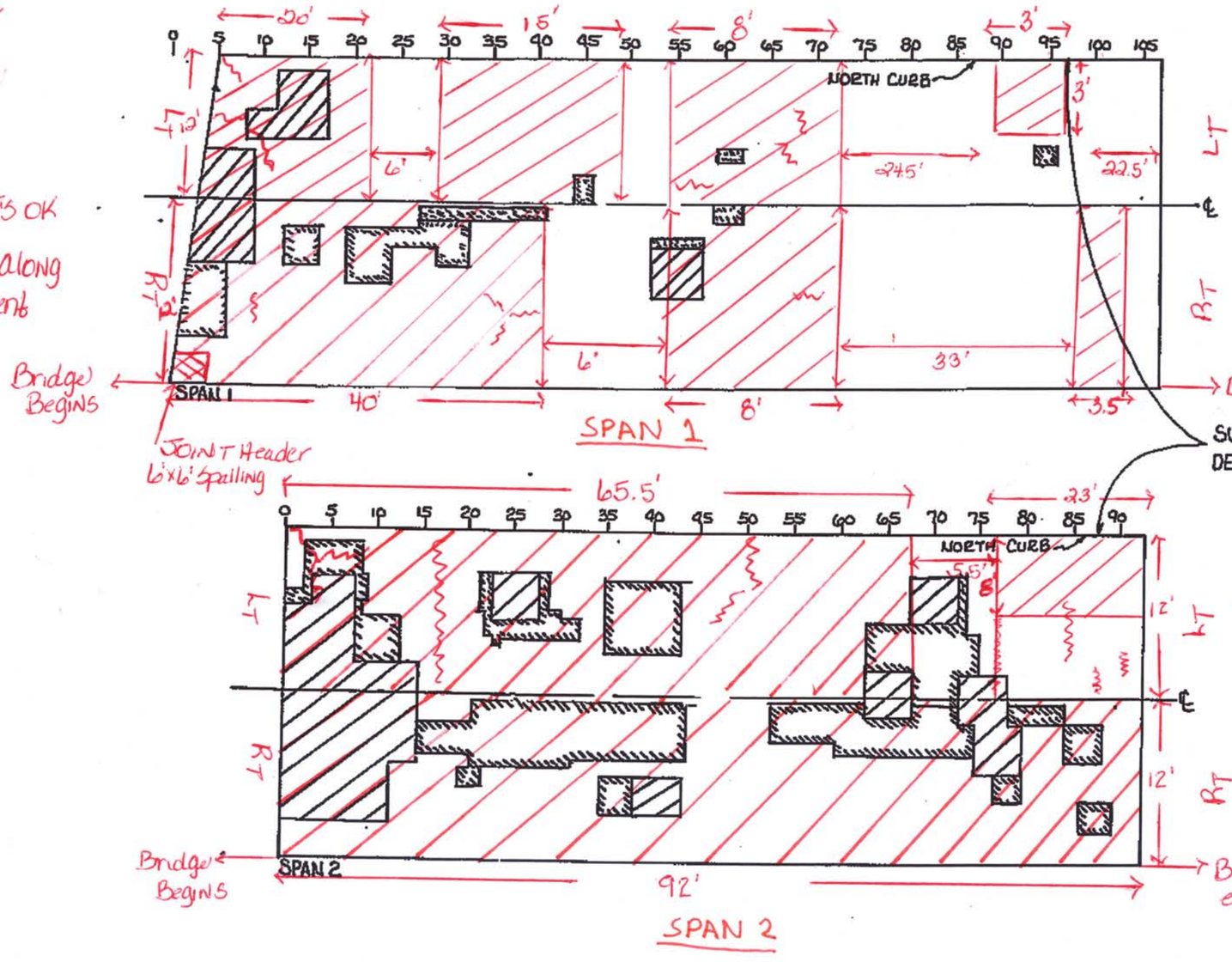

SURVEY ℄'s FOR DECK EVALUATION





LEGEND

- CORE LOCATION (C-X)
- PHOTO LOCATION (XX)
- DELAMINATION
- SPALLING
- CRACK
- MAP CRACKING
- MOISTURE

- JOINT IS OK
- Crack along Pavement

BIN 1064650
KINNE Rd
I-481 NB/SB

NTS

EXISTING CONCRETE COVER SURVEY DATA	EXISTING CONCRETE COVER SURVEY DATA

BIN 1064650, KINNE Rd, CORE LOCATIONS



LEGEND

- C-X — CORE LOCATION
- XX — PHOTO LOCATION
- DELAMINATION
- SPALLING
- CRACK
- MAP CRACKING
- MOISTURE

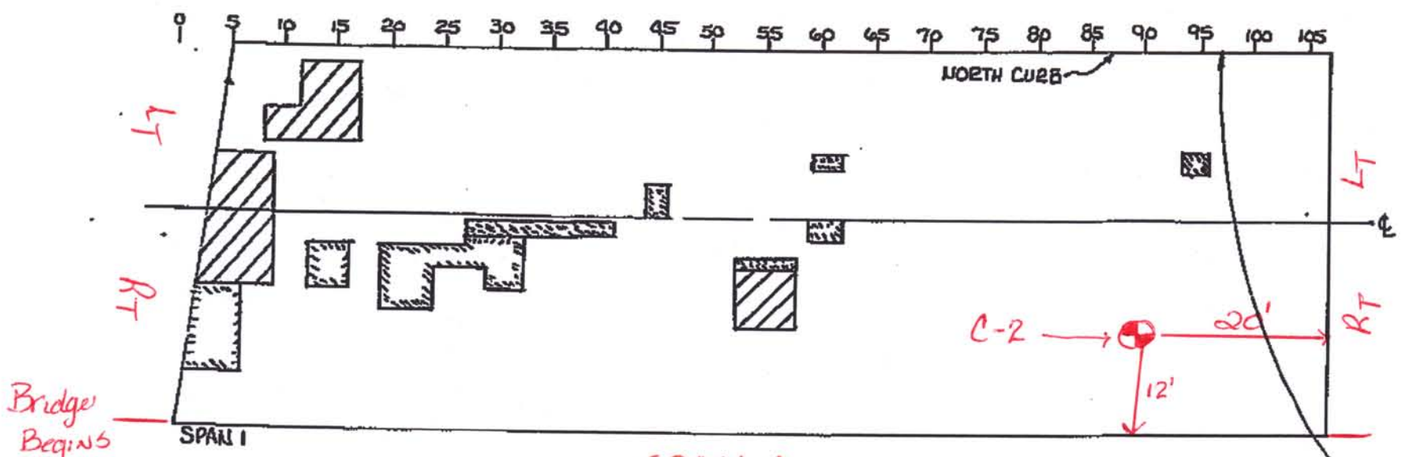

SPAN 1

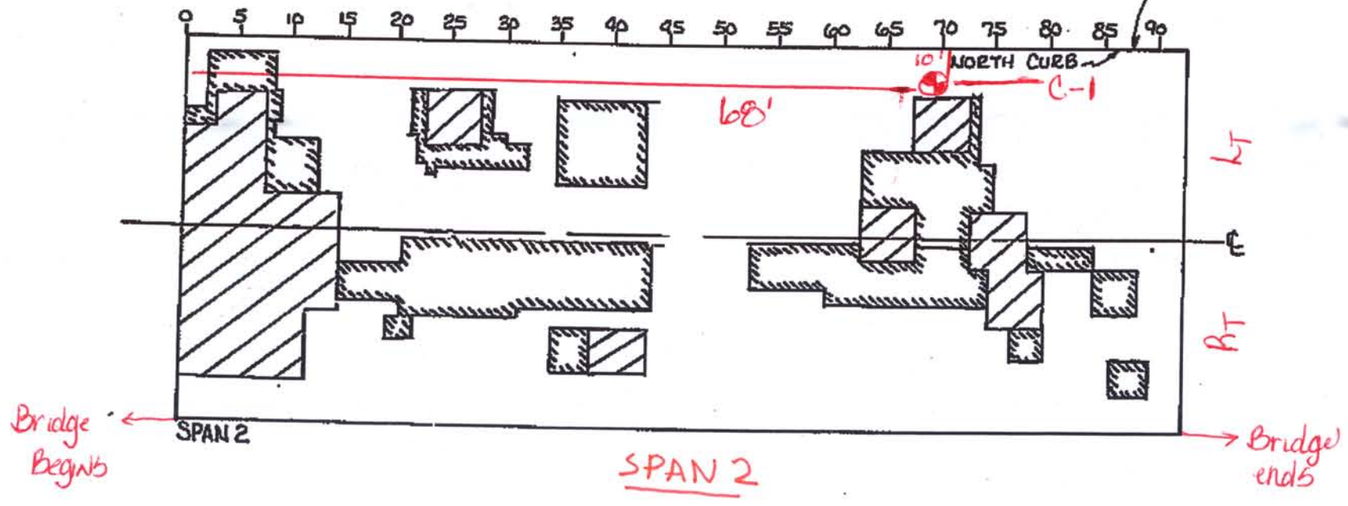

SPAN 2



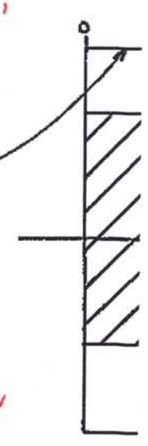

SURVEY ℄'s FOR DECK EVALUATION

C-2 20'-12'

C-1 68'-10'

NTS

EXISTING CONCRETE COVER SURVEY DATA

EXISTING CONCRETE COVER SURVEY DATA

F.I.S.H. 68-4 F.I.S.H. 68-5 F.I.S.H. 68-6P

FED. RD. REG. NO.	STATE	FEDERAL PROJECT AID NO.	SHEET NO.	TOTAL SHEETS
I	NEW YORK	F-281-2 (103) F-690-3 (23)	172RI	290

INTERSTATE ROUTE CONNECTION 571
DEWITT TO BUTTERNUT INTERCHANGE

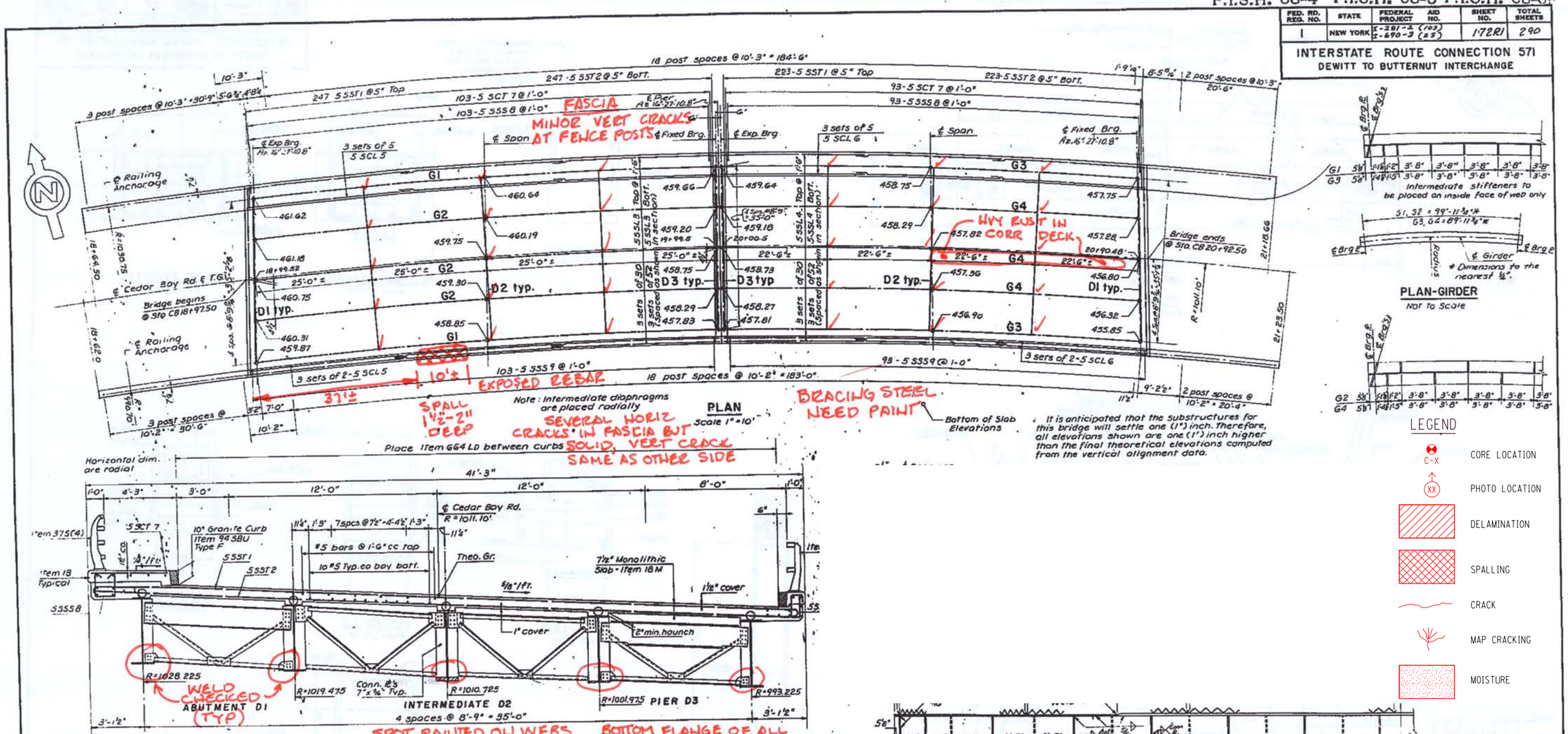

GIRDER SCHEDULE

GIRDER	NO. REQ'D.	FLANGE PLATES TOP A	TOP B	BOTTOM C	BOTTOM D	BOTTOM E	WEB	STIFFENER PLATE END	STIFFENER PLATE INTERMEDIATE	ADJUSTMENT FOR CAMBER SLAB CONC.	V.C.	SUPERIM. DEAD LOAD	D.L. STEEL ERECTED	TOTAL
G1	2	15"x 1 1/16" x 20'-5"	15"x 1 3/8" x 30'-0"	16"x 1 3/8" x 11'-5"	16"x 1 3/8" x 9'-0"	16"x 2 3/4" x 30'-0"	44" x ⅜"	7"x 7/16" x 3'-8" 4 Reqd.	4"x ⅜" x 3'-8" 29 Reqd.	2'6"	—	5/8"	5/8"	3 3/8"
G2	3	15"x 1 5/16" x 17'-11"	15"x 1 5/8" x 32'-6"	15"x 1 1/16" x 9'-9"	15"x 1 3/8" x 7'-0"	15"x 2 3/16" x 34'-0"	44" x ⅜"	7"x 7/16" x 3'-8" 4 Reqd.	4"x ⅜" x 3'-8" 29 Reqd.	2'6"	"	9/16"	9/16"	3 1/4"
G3	2	15"x 1 5/16" x 18'-5"	15"x 1 7/16" x 27'-0"	15"x 5/8" x 10'-11"	15"x 1/4" x 8'-6"	15"x 2" x 26'-0"	44" x ⅜"	7"x 7/16" x 3'-8" 4 Reqd.	4"x ⅜" x 3'-8" 26 Reqd.	1'8"	5/8"	1/2"	7/16"	3 5/16"
G4	3	15"x 1 7/16" x 17'-5"	15"x 1 1/8" x 28'-0"	15"x 5/8" x 9'-11"	15"x 1/4" x 7'-0"	15"x 2 1/4" x 28'-6"	44" x ⅜"	7"x 7/16" x 3'-8" 4 Reqd.	4"x ⅜" x 3'-8" 26 Reqd.	1'10"	5/8"	7/16"	7/16"	3 5/16"

VERTICAL MEASUREMENTS (TO TOP OF STEEL)

	a	b	c	d	e
W. ABUT	1/4"	5 3/4"	11"	1'-4 3/8"	1'-9 3/16"
PIER	0"	5 3/4"	11 1/4"	1'-4 3/4"	1'-9 7/8"
E. ABUT	-3/8"	5 1/2"	11 1/2"	1'-5"	1'-10 1/2"

Level Line
T.G. = Theoretical Grade elevation plus one (1") inch.
(- indicates that top of steel is higher than T.G.)

As Built Revisions
Note

BUTTERNUT INTERCHANGE
F.A.I. 690 & F.A.I. 281
BRIDGE No. 1
RELOCATED CEDAR BAY ROAD
OVER I 281
SUPERSTRUCTURE 1

DRAWING NO.	SCALE	DATE	SHEET NO.
9095	As Shown	DEC 7 1967	172 RI

LOCKWOOD, KESSLER & BARTLETT, INC.
CONSULTING ENGINEERS — SYOSSET, NEW YORK

In Charge of J. Eaton
Made by S. Ranacci
Traced by S. Ranacci
Checked by B.D. Lisky

BIN 1064650 WELD INSPECTION

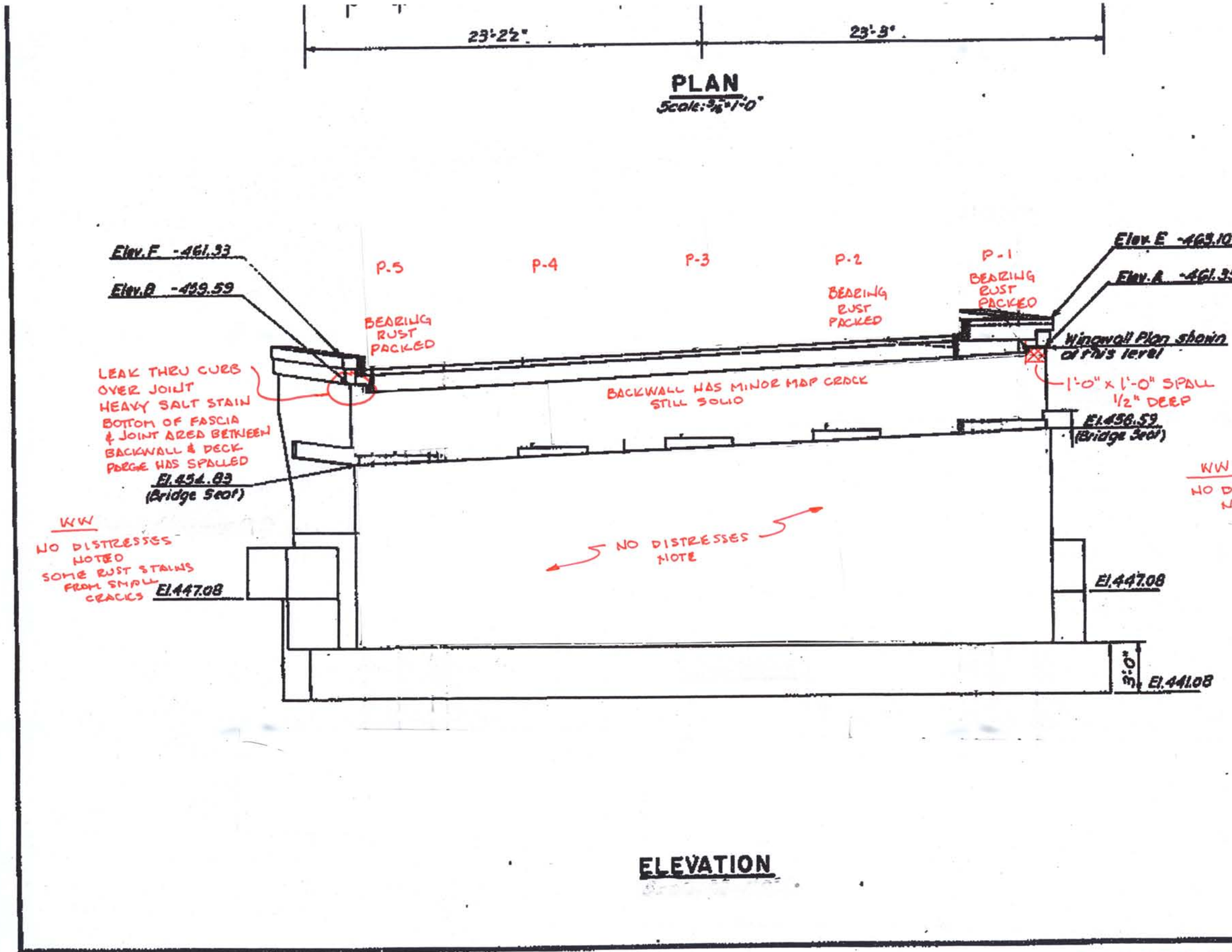

ELEVATION

Drawn by V. Eaton
Made by B. Montowski
Read by B. Montowski
Checked by B. D. Lowry

BIN 1064650
KINNE RD OVER I-481
WEST ABUTMENT

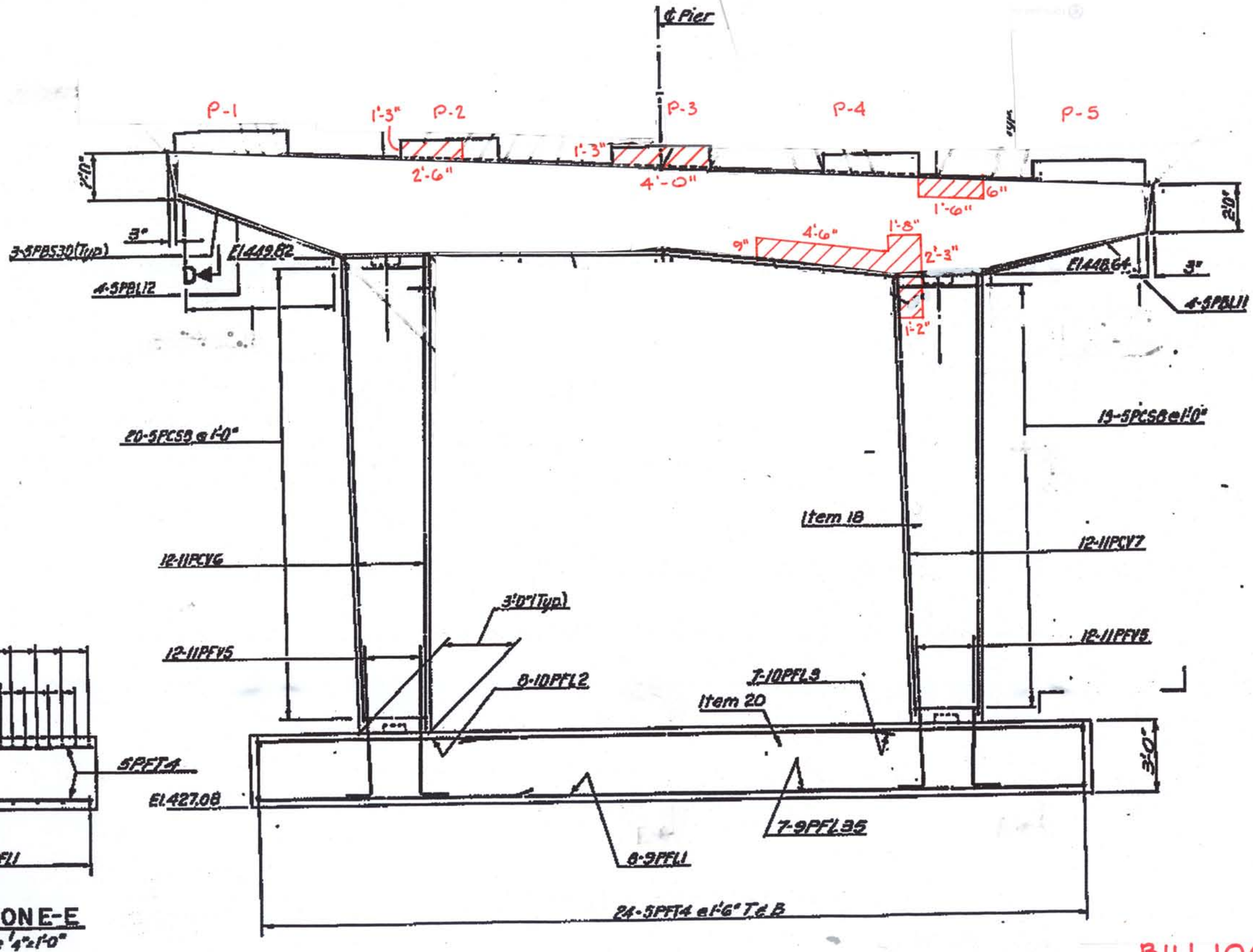

SECTION E-E
Scale 1/4"=1'-0"

ELEVATION
Scale 1/4"=1'-0"

LEGEND

- C-X — CORE LOCATION
- XX — PHOTO LOCATION
- DELAMINATION
- SPALLING
- CRACK
- MAP CRACKING
- MOISTURE

BIN 1064650
KINNE RD OVER I-481
CENTER PIER-EAST FACE
(MIRROR IMAGE)

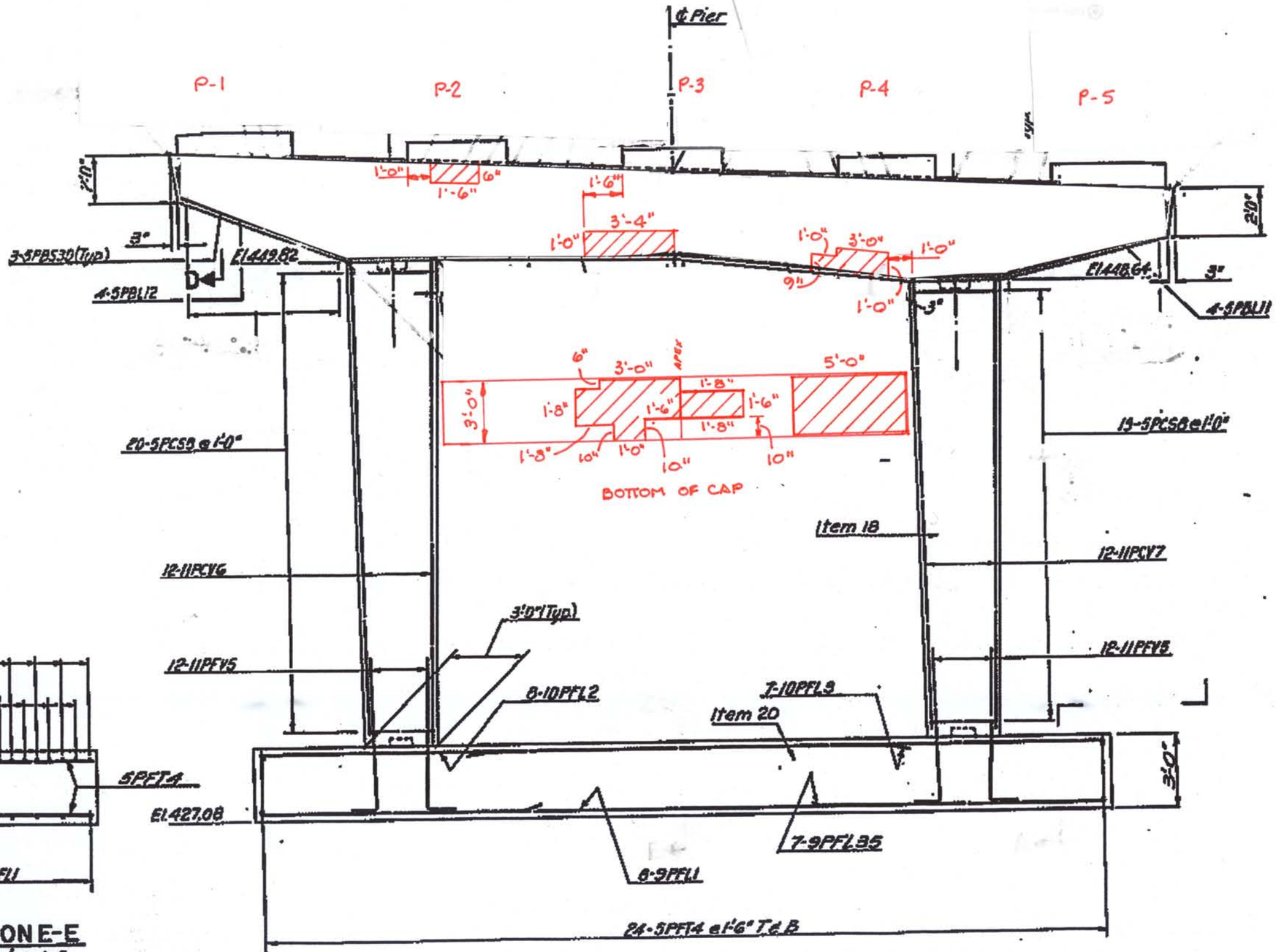

LEGEND

- CORE LOCATION (C-X)
- PHOTO LOCATION (XX)
- DELAMINATION
- SPALLING
- CRACK
- MAP CRACKING
- MOISTURE

BIN 1064650
KINNE RD. OVER I-481
CENTER PIER - WEST FACE

Traced By: B. Vonkowski
Checked By: D. DeLong

LEGEND

- CORE LOCATION (C-X)
- PHOTO LOCATION (XX)
- DELAMINATION
- SPALLING
- CRACK
- MAP CRACKING
- MOISTURE

EA-4 NORTH SIDE
ANCHOR BOLT NUT NOT SEATED ON PEDESTAL

BEARINGS ARE ALL PAINTED IN WITH SOME RUST

EA-1 EA-2 EA-3 EA-4 EA-5

Elev. 459.20
Elev. E

DECK JOINT LEAKING

Elev. 457.41
Elev A

WET SPOT ON WALL FROM WATER ENTERING JOINT BETWEEN BACKWALL & DECK

WET SPOT

Elev. 452.72
Bridge Seat

Elev. 457.08
Elev. C

8" 1'-6" 8" 2'-0" 1'-6" 8" BACKWALL

BACKWALL HAS SHRINKAGE CRACKS ENTIRE LENGTH

COUPLE OF CRACKS LEAKING RUST

REPLACE PEDESTAL

Elev. 455.13
Elev. D

Elev. 455.51 - Elev. B

El. 457.23
Elev. F

SPALL UPPER CORNER 1'-0" x 1'-0"; 3/4" DEEP

MAP CRACKING

Elev. 450.82
Bridge Seat

3'-6"

El. 446.08

MINOR MAP CRACK

3'-0"
5'-0"

4'-0"

El. 437.08

WW

SHORT CRACK UNDER JOINT OPENING - SALT STAINED

MINOR MAP CRACKING IN WALL AS IT APPROACHES SIDE STREET INTERSECTION

DECK FACIA HAS SEVERAL HORIZ CRACKS WITH RUST & SALT STAINS.

WW

MODERATE MAP CRACKING ALONG PREVIOUS REPAIR FULL HEIGHT OF WALL
WIDTH: BELOW PED. SEAT 12" → 24"
ABOVE PED. SEAT 24" TO TOP OF WALL

EFFLO PRESENT ALONG SEAM OF PREVIOUS REPAIR WITH 2 SPALLS AT TOP OF PATCH 3/4" DEEP

HORIZ CRACKS IN DECK FASCIA FROM DECK JOINT TO END OF SNOW FENCE.
SPALL IN BOTTOM OF FASCIA 1'-0"L x 4" WIDE 1" DEEP

2'-0" WIDE
TOP OF WALL
WW
PED.
CRACKS IN PREVIOUS PATCH
FINISH GRADE
SIDE VIEW

ELEVATION ⚠

BIN 1064650

EAST ABUTMENT

KINLIE RD OVER I 48(

IN-DEPTH PHOTO DOCUMENTATION

C&S Engineers, Inc.
499 Col. Eileen Collins Blvd.
Syracuse, New York 13212
Phone: (315) 455-2000
Fax: (315) 455-9667
www.cscos.com

Kinne Road over I-81 - BIN 1064650



DESCRIPTION: WEST ABUTMENT – ELEVATION – LOOKING WEST

PHOTO 1



DESCRIPTION: WEST ABUTMENT – PEDESTAL 5 – CRACK IN PEDESTAL AND ABUTMENT STEM

PHOTO 2

C&S Engineers, Inc.
499 Col. Eileen Collins Blvd.
Syracuse, New York 13212
Phone: (315) 455-2000
Fax: (315) 455-9667
www.cscos.com

Kinne Road over I-81 - BIN 1064650



DESCRIPTION: WEST ABUTMENT – BEARING 5 – LOOKING WEST – PACK RUST UNDER BEARING PAD, MOVEMENT OF BEARING RESTRICTED – TYPICAL BEARINGS 1, 2 & 5

PHOTO 3



DESCRIPTION: WEST ABUTMENT – BEARING 3 – MINIMAL PACK RUST – TYPICAL BEARINGS 3 & 4

PHOTO 4

C&S Engineers, Inc.
499 Col. Eileen Collins Blvd.
Syracuse, New York 13212
Phone: (315) 455-2000
Fax: (315) 455-9667
www.cscos.com

Kinne Road over I-81 - BIN 1064650



DESCRIPTION: WEST ABUTMENT – BACKWALL – BAY 3 – MAP-CRACKING – TYPICAL ENTIRE BACKWALL

PHOTO 5



DESCRIPTION: WEST ABUTMENT – BACKWALL – ABOVE PEDESTAL 5 – SALT ACCUMULATION AND MOISTURE EVIDENCE OF LEAKING DECK JOINT

PHOTO 6

C&S Engineers, Inc.
499 Col. Eileen Collins Blvd.
Syracuse, New York 13212
Phone: (315) 455-2000
Fax: (315) 455-9667
www.cscos.com

Kinne Road over I-81 - BIN 1064650



DESCRIPTION: WEST ABUTMENT – SOUTHWEST WINGWALL – TYPICAL BOTH WINGWALLS

PHOTO 7



DESCRIPTION: SUPERSTRUCTURE – BAY 1 – LOOKING EAST – CROSS FRAMES CONTAIN ISOLATED PAINT DELAMINATION AND RUST – S.I.P. FORMS CONTAIN SOME RUST – TYPICAL ALL BAYS

PHOTO 8

C&S Engineers, Inc.
499 Col. Eileen Collins Blvd.
Syracuse, New York 13212
Phone: (315) 455-2000
Fax: (315) 455-9667
www.cscos.com

Kinne Road over I-81 - BIN 1064650



DESCRIPTION: CENTER PIER – CAP BEAM – WEST FACE – ISOLATED DELAMINATION

PHOTO 9



DESCRIPTION: CENTER PIER – EAST FACE – PEDESTALS 3 TO 5 – ISOLATED DELAMINATION ON CAP BEAM

PHOTO 10

C&S Engineers, Inc.
499 Col. Eileen Collins Blvd.
Syracuse, New York 13212
Phone: (315) 455-2000
Fax: (315) 455-9667
www.cscos.com

Kinne Road over I-81 - BIN 1064650



DESCRIPTION: CENTER PIER – CAP BEAM – EAST FACE – BETWEEN PEDESTALS 1 AND 3 – ISOLATED DELAMINATED CONCRETE

PHOTO 11



DESCRIPTION: CENTER PIER – EAST FACE – TYPICAL DELAMINATION

PHOTO 12

C&S Engineers, Inc.
499 Col. Eileen Collins Blvd.
Syracuse, New York 13212
Phone: (315) 455-2000
Fax: (315) 455-9667
www.cscos.com

Kinne Road over I-81 - BIN 1064650



DESCRIPTION: CENTER PIER – CAP BEAM – UNDERSIDE - DELAMINATION

PHOTO 13



DESCRIPTION: CENTER PIER – CAP BEAM – EAST FACE – DELAMINATION

PHOTO 14

C&S Engineers, Inc.
499 Col. Eileen Collins Blvd.
Syracuse, New York 13212
Phone: (315) 455-2000
Fax: (315) 455-9667
www.cscos.com

Kinne Road over I-81 - BIN 1064650



DESCRIPTION: CENTER PIER – PEDESTAL 3 – EAST FACE – CRACKED AND DELAMINATED – TYPICAL PEDESTALS 2 & 3

PHOTO 15



DESCRIPTION: CENTER PIER - PEDESTAL 3 – WEST FACE – TYPICAL PEDESTAL 4 & 5

PHOTO 16

C&S Engineers, Inc.
499 Col. Eileen Collins Blvd.
Syracuse, New York 13212
Phone: (315) 455-2000
Fax: (315) 455-9667
www.cscos.com

Kinne Road over I-81 - BIN 1064650



DESCRIPTION: CENTER PIER – PEDESTAL 5 – BEARING MASONRY PLATES PACK-RUSTED AND OUT OF PLANE

PHOTO 17



DESCRIPTION: CENTER PIER – PEDESTAL 3 – TYPICAL PIER BEARINGS

PHOTO 18

C&S Engineers, Inc.
499 Col. Eileen Collins Blvd.
Syracuse, New York 13212
Phone: (315) 455-2000
Fax: (315) 455-9667
www.cscos.com

Kinne Road over I-81 - BIN 1064650



DESCRIPTION: EAST ABUTMENT – ELEVATION

PHOTO 19



DESCRIPTION: EAST ABUTMENT – STEM - LOOKING NORTH – CRACKING AND SPALLING

PHOTO 20

C&S Engineers, Inc.
499 Col. Eileen Collins Blvd.
Syracuse, New York 13212
Phone: (315) 455-2000
Fax: (315) 455-9667
www.cscos.com

Kinne Road over I-81 - BIN 1064650



DESCRIPTION: EAST ABUTMENT – BACKWALL – BAY 1 – MAP-CRACKING – TYPICAL ALL BAYS

PHOTO 21



DESCRIPTION: EAST ABUTMENT – PEDESTAL 2 – ISOLATED DELAMINATION READY TO SPALL – BEARING COMPONENTS CONTAIN MINOR PACK RUST – TYPICAL ALL INTERIOR PEDESTALS

PHOTO 22

C&S Engineers, Inc.
499 Col. Eileen Collins Blvd.
Syracuse, New York 13212
Phone: (315) 455-2000
Fax: (315) 455-9667
www.cscos.com

Kinne Road over I-81 - BIN 1064650



DESCRIPTION: EAST ABUTMENT – PEDESTAL 5 – LOOKING EAST – CONCRETE CRACKING AND DELAMINATED

PHOTO 23



DESCRIPTION: EAST ABUTMENT – PEDESTAL 5 – LOOKING NORTHEAST – CONCRETE CRACKING AND DELAMINATED

PHOTO 24

C&S Engineers, Inc.
499 Col. Eileen Collins Blvd.
Syracuse, New York 13212
Phone: (315) 455-2000
Fax: (315) 455-9667
www.cscos.com

Kinne Road over I-81 - BIN 1064650



DESCRIPTION: EAST ABUTMENT – BEARING 5 CRACKED WELD, SOLE PLATE TO BOTTOM FLANGE (FASCIA SIDE) – PAINTED OVER IN 2013

PHOTO 25



DESCRIPTION: EAST ABUTMENT – BEARING 5 – CRACKED WELD, SOLE PLATE TO BOTTOM FLANGE (INTERIOR SIDE)

PHOTO 26

C&S Engineers, Inc.
499 Col. Eileen Collins Blvd.
Syracuse, New York 13212
Phone: (315) 455-2000
Fax: (315) 455-9667
www.cscos.com

Kinne Road over I-81 - BIN 1064650



DESCRIPTION: EAST ABUTMENT – SOUTHEAST WINGWALL – LOOKING NORTHWEST – TYPICAL

PHOTO 27



DESCRIPTION: SOUTHERN FASCIA

PHOTO 28

C&S Engineers, Inc.
499 Col. Eileen Collins Blvd.
Syracuse, New York 13212
Phone: (315) 455-2000
Fax: (315) 455-9667
www.cscos.com

Kinne Road over I-81 - BIN 1064650



DESCRIPTION: DECK OVERHANG – CENTER PIER – SOUTH END LOOKING NORTHWEST – LEAKING DECK JOINT, SALT AND ICE ACCUMULATION

PHOTO 29



DESCRIPTION: SOUTHERN FASCIA – SPAN 1 – APPROX. 37' FROM WEST ABUTMENT – CONCRETE SPALL

PHOTO 30

C&S Engineers, Inc.
499 Col. Eileen Collins Blvd.
Syracuse, New York 13212
Phone: (315) 455-2000
Fax: (315) 455-9667
www.cscos.com

Kinne Road over I-81 - BIN 1064650



DESCRIPTION: DECK – SPAN 1 – LOOKING WEST – ISOLATED DELAMINATED AREAS

PHOTO 31



DESCRIPTION: DECK – SPAN 2 – LOOKING WEST – ISOLATED DELAMINATED AREAS WITH TRANSVERSE CRACKING

PHOTO 32

C&S Engineers, Inc.
499 Col. Eileen Collins Blvd.
Syracuse, New York 13212
Phone: (315) 455-2000
Fax: (315) 455-9667
www.cscos.com

Kinne Road over I-81 - BIN 1064650



DESCRIPTION: BRIDGE ELEVATION – FACING NORTH

PHOTO 33

DESCRIPTION:

PHOTO

Photo Log Map

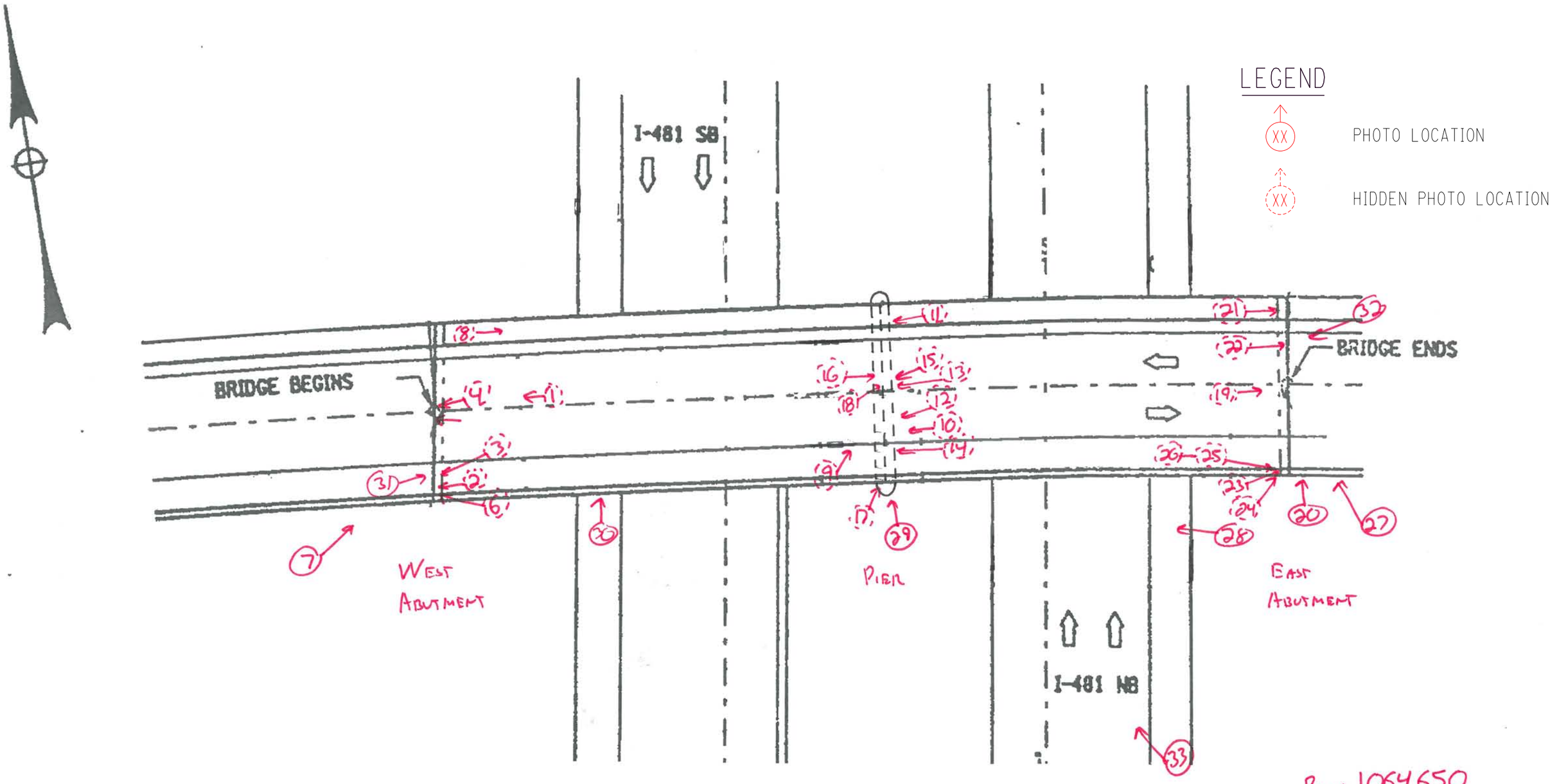

BIN 1064650
KINNE ROAD OVER
I-481

ASBESTOS DOCUMENTATION

ASBESTOS DOCUMENTATION FROM WATTS ARCHITECTURE & ENGINEERING, INC.

(WILL REPLACE BIN FOLDER ASBESTOS REPORT UPON COMPLETION)

LABELLA KNOWN PLM. Tests POS for Dust Dust

3

ATHENICA
ENVIRONMENTAL SERVICES INC.
Tel (718) 784-7490
Fax (718) 784-4085

BULK (NOB) ASBESTOS ANALYSIS BY POLARIZED LIGHT MICROSCOPY AND TRANSMISSION ELECTRON MICROSCOPY

CLIENT: NYS DOT, Region 3
LABORATORY ID #: 04-04-154
DATES OF ANALYSIS: 04/30/04

PROJECT: Bin # 1064650
ANALYT. METHODOLOGIES: ELAP 198.1, ELAP 198.4
DATE OF REPORT: 04/30/04

LABORATORY RESULTS

CLIENT #	LAB. ID #	LOCATION	%ORG	%ASI	%AII	PLM RESULTS	TYPE OF ASBEST.	TEM RESULTS	TYPE OF ASBEST.	POSIT. / NEGAT.
01	04-04-154-01	Steel paint coat span2, G1, right web, 3m from end	37.29	9.11	53.60	**ND**	NA	**ND**	NA	**Negat.**
02	04-04-154-02	Steel paint coat span2, G2, left web, 6m from end	39.84	12.14	48.02	**ND**	NA	**ND**	NA	**Negat.**
03	04-04-154-03	Sweet paint coat span2, G5, left web, 2m from end	33.64	12.38	53.97	**ND**	NA	**ND**	NA	**Negat.**

E. Sioukri

ANALYST
E. Sioukri

LABORATORY DIRECTOR
Spiro Dongaris

LABORATORY CERTIFICATION NUMBERS: NVLAP 101958, ELAP 10955

- Athenica Environmental Services Inc. (AES), is responsible only for information pertaining to samples taken by its employees.
- Samples will be stored for sixty (60) days. AES Inc., should be notified within this time frame for a true duplicate analysis.
- The report relates only to items tested. This report must not be used to claim product endorsement by NVLAP or any other agency of the U.S. Government. Test reports may not be reproduced except in full and with prior approval of AES Inc.
- The liability of Athenica Environmental Services Inc. with respect to the services charged, shall in no event exceed the amount of the invoice.

ATHENICA
ENVIRONMENTAL SERVICES INC.
45-09 GREENPOINT AVENUE
LONG ISLAND CITY, NY 11104
Tel. (718) 784-7490
Fax. (718) 784-4085

PROJECT NO. (ATHENICA FILE#) C003314
SITE BIN # 1069650
METHOD OF SHIPMENT U.S. MAIL
DATE 4/12/2004
INSPECTOR Gary W. Cook
NUMBER OF SAMPLES 3
TYPE OF ANALYSIS REQUESTED ☐ PLM ☒ NOB-PLM ☒ NOB-TEM ☐ OTHERS
TURNAROUND TIME ☐ 6 HRS ☐ 12 HRS ☐ 24 HRS ☒ OTHER HRS

ATTN: EMANUEL DIMITRAKAS

COMMENTS ATT: CHRISTOPHER ANDERSON, NYSDOT
333 E. WASHINGTON ST. SYRACUSE, N.Y. 13202

HOM. AREA	SAMLPLE #	SAMPLE DESCRIPTION	SAMPLE LOCATION	FIELD COMMENTS	LABORATORY RESULTS		
					PLM	PLM-NOB	TEM-NOB
	01	STEEL PAINT COAT	Span 2, G1, Rt web, 3M fr end,	2:15p, cloudy			
	02	"	Span 2, G2, Lt web, 6M fr end,	2:20p,			
	03	"	Span 2, G5, Lt web, 2M fr end,	2:20p,			

TRANSMITTAL OF RESULTS :
☒ STANDARD
☐ TELEPHONE RESULTS TO
☐ FAX RESULTS TO

TELEPHONE # : (315) 428-4628
FAX # :

BATCH # : 04-04-154

CHAIN OF CUSTODY RECORD

RELINQUISHED BY :	Gary W. Cook	DATE :	4/12/2004	TIME :	10:00AM
RECEIVED BY :	RELINQUISHED	DATE :	4/26/2004	TIME :	
ANALYST :		DATE :	4/30/2004	TIME :	

LABORATORY ACCREDITATION :
NVLAP# 101958 ELAP# 10955

Asbestos Sampling Survey

Location:

BIN 1064650
Kinne Road over Interstate Route I-481

Prepared for:

New York State
Department of Transportation

PIN 3056.13.111

LaBella Project No. 201001

August 2001

Table of Contents

Page

I. Project Summary 1

II. Site Description 1

III. Inspection Procedures 1

IV. Results 2

Certification 2

Figures and Table

I. Project Summary

In accordance with conditions of Term Agreement D012606, LaBella Associates, P.C. conducted an asbestos sampling survey of the Kinne Road Bridge over Interstate Route I-481. Based on laboratory analyses of bulk samples collected, the following material was determined to contain asbestos:

BIN 1064650 – Kinne Road over Interstate Route I-481

Type of Material	Estimated Amount
Sheet Packing	7.4 Square Meters

II. Site Description

The Site is located in Onondaga County, New York. For the purpose of this report, the Site consists of the Kinne Road Bridge over Interstate Route I-481. (See attached FIGURE 1 - Site Location Map).

III. Inspection Procedures

The following procedures were used to obtain the data for this Report:

A. A review of record drawings supplied by Region 3 personnel and a visual inspection of the subject structure were conducted to identify potential visible/accessible sources of asbestos-containing materials. Observations and notes were made to provide a description of the structure, and an estimate of the approximate amount, length, or area of ACM present.

B. Physical or operational constraints, which might affect the removal of the ACM, were identified and reported.

C. Bulk samples of suspected ACM were collected during the site inspection of the subject structure. Samples were taken from each homogeneous area that may contain ACM.

D. Samples were submitted for analysis. Preliminary PLM analyses of NOB materials were performed by LaBella Laboratories, a NYSDOH approved laboratory, to determine the presence and percentage of asbestos in each sample. TEM analyses of NOB materials, if necessary, were performed by AMA Analytical, Inc.

E. Lab results were used to determine the approximate location, type, and amount of the verified ACM.

F. A drawing of the structure at the Site was created, in order to show sample locations and the approximate locations and amounts of confirmed ACM observed in accessible locations.

Figures & Table

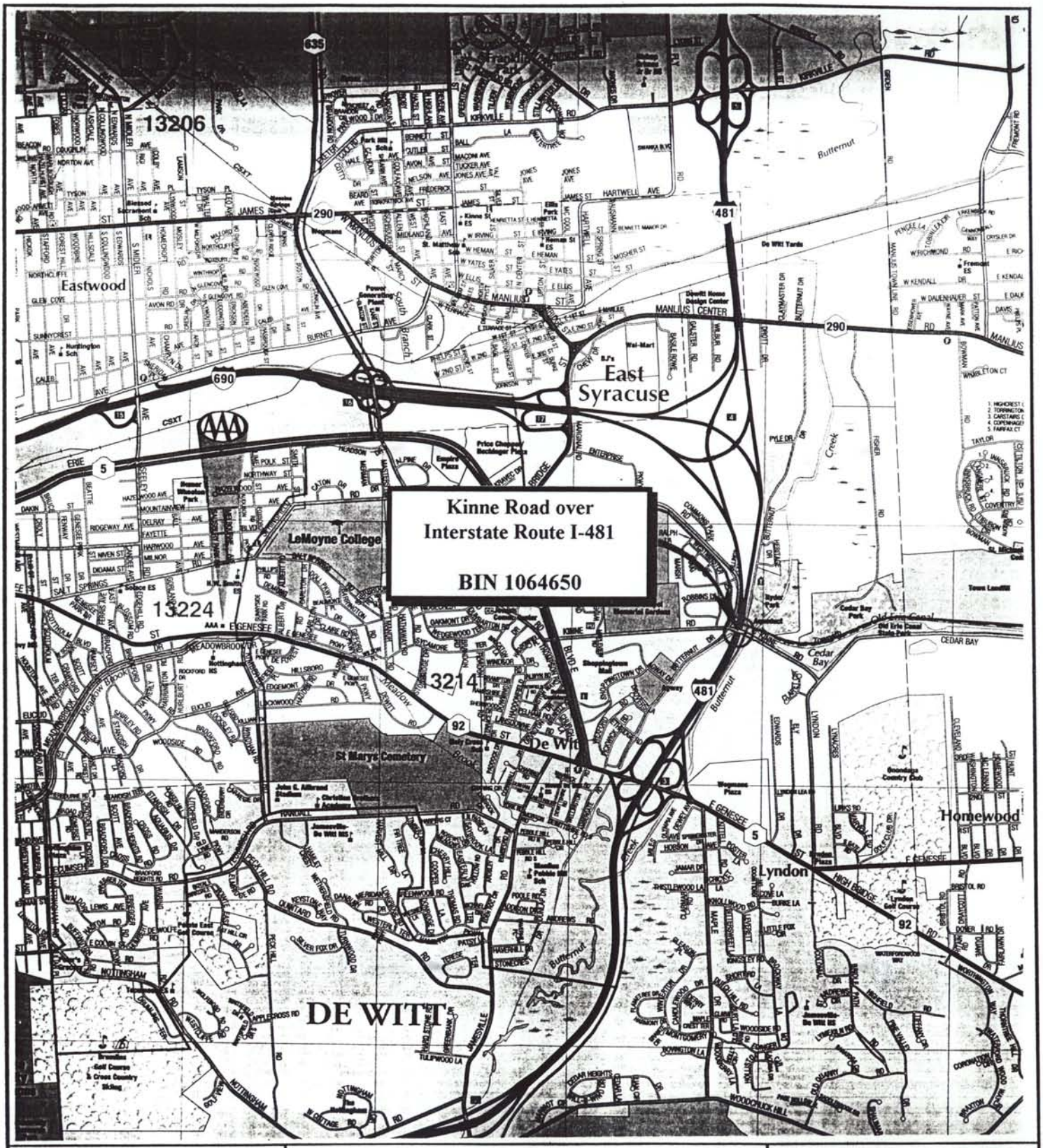

N

FIGURE 1
Site Location Map

Kinne Road
over Interstate Route I-481
Onondaga County, New York

LABELLA

PROJECT NO. 201001

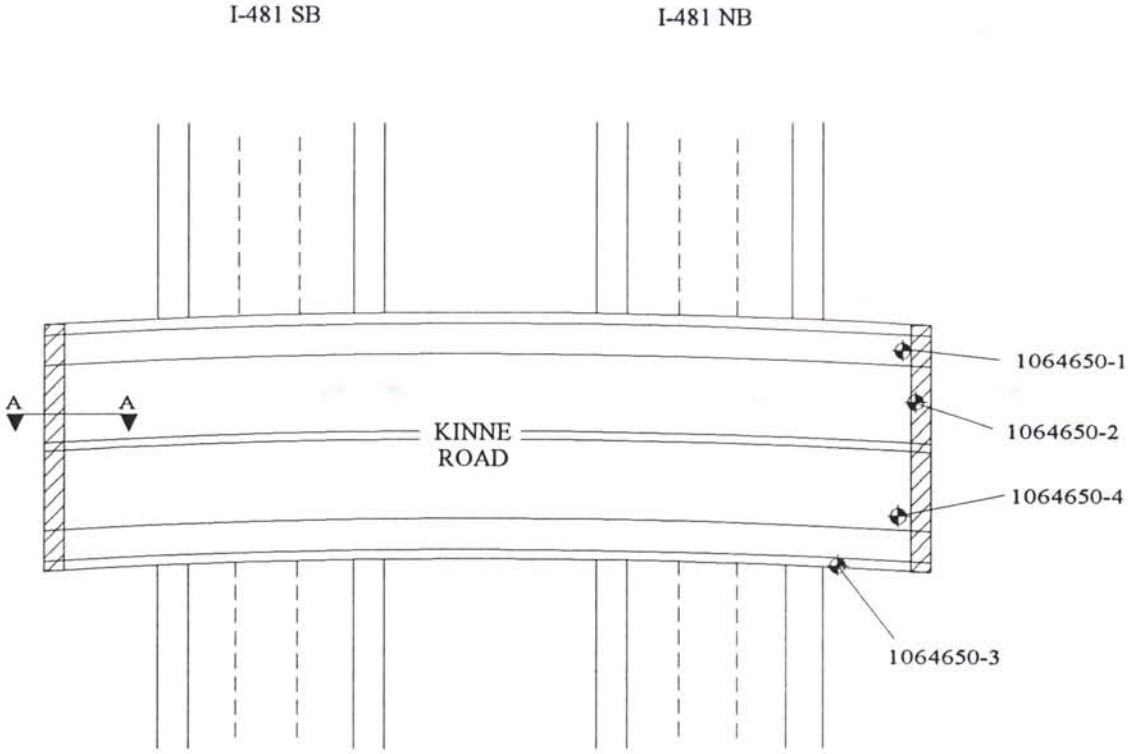

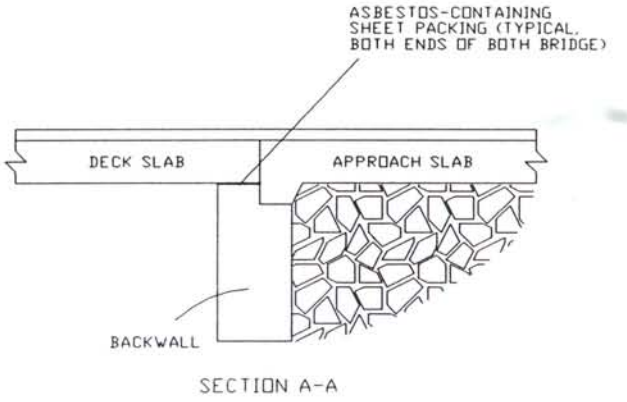

LEGEND

- 1064650-1 SAMPLE LOCATION
- ASBESTOS-CONTAINING SHEET PACKING

NORTH

PROJECT TITLE: ASBESTOS SAMPLING SURVEY 19 BRIDGES ALONG INTERSTATE I-481 ONONDAGA COUNTY, NEW YORK	PROJECT NO. 201001 PIN 3056.13.111
FIGURE TITLE: FIGURE 2 BIN 1064650 KINNE ROAD OVER I-481 SAMPLE LOCATIONS & CONFIRMED ACM	NOT TO SCALE DATE: AUGUST, 2001

Bulk Sample Results Table

Asbestos Sampling Survey
BIN 1064650
Kinne Road over Interstate Route I-481
Onondaga County, New York
LaBella Project # 201001
PIN 3056.13.111

Sample #	Sample Location	Type of Material	Results % Asbestos	Amount of Material	Specification Item No.
1064650-1	East End of Bridge Beneath Bearing	Bearing Pad	None Detected	N/A	N/A
1064650-2	**East End of Bridge Between Deck and Abutment**	**Sheet Packing**	**40% Chrysotile**	**7.4 Square Meters**	**15202.062801 M (BV-12)**
1064650-3	East End of Bridge on I-Beam	Green Paint	None Detected	N/A	N/A
1064650-4	East End of Bridge on Pedestal	Gray Masonry Coating	None Detected	N/A	N/A

NEW YORK STATE
DEPARTMENT OF TRANSPORTATION
D031085 P.I.N 3501.60

LEVEL 1 LOAD RATING
B.I.N. 1064650
Kinne Road over I-481

LOAD RATING SUMMARY TABLE (LOAD FACTOR)				
CONTROLLING MEMBER	**CONTROLLING PARAMETER**	**LIVE LOAD**	**INVENTORY RATING**	**OPERATING RATING**
SPAN 2 INTERIOR GIRDER S4 RIGHT	FLEXURE	HS20-44	HS 21.8 (39.2 TONS)	HS 36.4 (65.5 TONS)

DOES NOT INCLUDE FUTURE WEARING COURSE

ANALYSIS METHOD:LOAD FACTOR

RECOMMENDED POSTING AS-IS CONDITION: _____ Tons __X__ None

CALCULATED BY:



DATE: 3/18/15

QUALITY ASSURANCE BY:

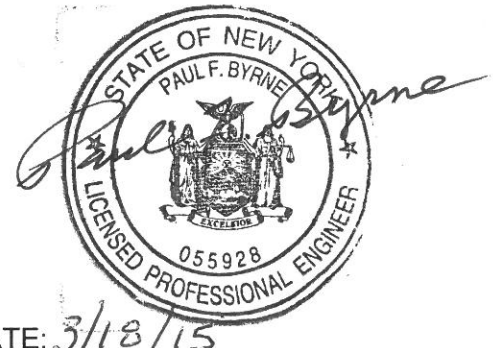

DATE: 3/18/15

ENGINEERS
DESIGN BUILD
TECHNICAL RESOURCES
OPERATIONS

C&S Companies

C&S Engineers, Inc.
Syracuse Hancock International Airport
Syracuse, NY 13212
phone 315-455-2000
fax 315-455-9667
www.cscos.com

TECHNICAL MEMORANDUM

TO: **FILE (190.514.001)**

FROM: **JESSICA S. BAUER, P.E**
NYSPE 084915

DATE: **FEBRUARY 10, 2014**

C&S PROJECT NO.: 190.514.001

RE: **SEISMIC ASSESSMENT SUMMARY**
NEW YORK STATE DEPARTMENT OF TRANSPORTATION
D031085; PIN 3501.60; I-81

BIN: **1064650 Seismic Assessment**

This memorandum summarizes the seismic assessment conducted for BIN 1064650 as part of the Interstate 81 Project in Syracuse, NY. The purpose of the assessment is to determine if seismic retrofits are warranted at the superstructure to substructure connection, and if further seismic evaluation of the structure is required. This memorandum will give the assessment results, retrofits required and recommendations for further seismic evaluation of the structure.

ASSESSMENT PROCEDURE

The seismic assessment was performed in accordance with the FHWA Seismic Retrofitting Manual for Highway Structures: Part 1 - Bridges, January 2006. As per the referenced manual, seismic assessment was performed for both lower level and upper level earthquake ground motion. The lower level earthquake ground motion has a reasonable likelihood of occurrence within the life of the bridge (50% probability of exceedance within a 75 year bridge life). The upper level earthquake ground motion has a finite likelihood of occurrence within the life of the bridge (7% probability of exceedance within a 75 year bridge life).

Values for the spectral acceleration for the Syracuse area used in the assessment are as follows:

- Lower Level Earthquake Ground Motion for a Short Period (0.2 seconds): $S_S = 0.0251$
- Lower Level Earthquake Ground Motion for a Long Period (1.0 seconds): $S_1 = 0.0076$
- Upper Level Earthquake Ground Motion for a Short Period (0.2 seconds): $S_S = 0.139$
- Upper Level Earthquake Ground Motion for a Long Period (1.0 seconds): $S_1 = 0.047$

These values are considered constant and are the same for all seismic assessments of bridges in the Syracuse area.

The Site Class is based on the soil conditions at the bridge location. It was determined that this parameter has little effect on the results of the seismic assessment because the spectral

You created this PDF from an application that is not licensed to print to novaPDF printer (http://www.novapdf.com)

acceleration values for the Syracuse area are small. Based on this, a site class of D was used for all seismic assessments of bridges in the Syracuse area.

Bridge parameters used in the seismic assessment were retrieved from the record drawings and WinBolts data.

The seismic assessment takes into account the anticipated service life, importance, and the seismic exposure of the bridge to determine a seismic retrofit category (SRC). The SRC is then used to determine seismic evaluation methods and retrofit measures. There are four SRCs, A through D. Seismic retrofit category A is the lowest category; bridges in this category do not require retrofits or further seismic evaluation. Seismic retrofit category D is the highest category; bridges in this category requiring the most rigorous seismic evaluations and retrofits.

ASSESSMENT RESULTS

The SRC for the bridge is "**C**" for lower level earthquake ground motion and "**B**" for upper level earthquake ground motion.

RETROFITS REQUIRED

Bearing replacements and seat width improvements are not required at the abutments or piers. Additional retrofits may be required if further seismic evaluation is needed.

RECOMMENDATIONS FOR FURTHER SEISMIC EVALUATION

For the lower level earthquake ground motion, it is recommended that capacity/demand ratios for bridge components are calculated as per Section 5.4 of the referenced manual. For the upper level earthquake ground motion, it is recommended that the capacities of the bearings are checked as per Section 5.2 of the referenced manual.

Retrofit cost estimates will be provided after any further required seismic evaluations are completed.

You created this PDF from an application that is not licensed to print to novaPDF printer (http://www.novapdf.com)

C&S Engineers, Inc.
Syracuse Hancock International Airport
Syracuse, NY 13212
phone 315-455-2000
fax 315-455-9667
www.cscos.com

TECHNICAL MEMORANDUM

TO: **FILE (190.514.001)**

FROM: **PAUL BYRNE, P.E.**
NYSPE 055928

DATE: **MARCH 12, 2015**

C&S PROJECT NO.: 190.514.001

RE: **NEW YORK STATE DEPARTMENT OF TRANSPORTATION**
D031085; PIN 3501.60; I-81 Opportunities, BIN 1064650 Fatigue Evaluation

---

This memorandum documents a fatigue evaluation conducted for the existing Interstate 81 Viaduct Project. Existing structures with AASHTO Category D, E, and E' fatigue-prone details require 100% hands-on inspection unless proven to be exempt. The purpose of the evaluation is to assess the remaining life of fatigue-prone components.

EVALUATION PROCEDURES

The fatigue evaluation was performed in accordance with the AASHTO Guide Specification for Fatigue Evaluations of Existing Steel Bridges, 1990. Fatigue-prone welds identified in the biennial inspection reports were located on record drawings and confirmed visually in the field. Additional information concerning fatigue-prone welds located in BIN folders was also obtained and reviewed prior to inspection.

EVALUATION RESULTS

The results of the fatigue evaluation of the existing bridge are shown below.

Fatigue Detail Location	Remaining Safe Fatigue Life (Years)	Remaining Mean Fatigue Life (Years)
Span 1, Exterior Girder G1 (Right), Gusset Plate at Bot. Flange, Midspan	286	1547
Span 1, Interior Girder G2 (Right), Gusset Plate at Bot. Flange, Midspan	973	4930
Span 1, Interior Girder G2 (Center), Gusset Plate at Bot. Flange, Midspan	1423	7144
Span 1, Interior Girder G2 (Left), Gusset Plate at Bot. Flange, Midspan	1012	5120
Span 1, Exterior Girder G1 (Left), Gusset Plate at Bot. Flange, Midspan	421	2213

Fatigue Detail Location	Remaining Safe Fatigue Life (Years)	Remaining Mean Fatigue Life (Years)
Span 2, Exterior Girder G3 (Right), Gusset Plate at Bot. Flange, Midspan	270	1470
Span 2, Interior Girder G4 (Right), Gusset Plate at Bot. Flange, Midspan	864	4390
Span 2, Interior Girder G4 (Center), Gusset Plate at Bot. Flange, Midspan	1196	6027
Span 2, Interior Girder G4 (Left), Gusset Plate at Bot. Flange, Midspan	939	4763
Span 2, Exterior Girder G3 (Left), Gusset Plate at Bot. Flange, Midspan	442	2316

E. Recommendations

The purpose of this deck evaluation is to document and determine existing conditions of the deck. It will be used as a tool for developing the scope of work and cost estimates for the development and comparison of alternatives for the overall project.

The total damaged area is approximately 74% of the total deck area. Due to the age, condition and chloride-ion content of the bridge deck concrete, the bridge deck should be rehabilitated or replaced to meet current design standards and to mitigate excessive future maintenance costs.

Option 1 – Scarify and Bridge Deck Overlay
The maximum service life this option would provide is 25 years. The design life of this project is 30 years (ETC + 30). This option does not meet the project objective of obtaining 30+ years of service life.

Option 2 – Bridge Deck Rehabilitation with 100% Deep Removal
This option will involve partial depth reconstruction with top mat rebar exposure of the entire bridge deck to remove the chloride contaminated concrete (100% deep removal). The existing bridge deck thickness is 9 ¼" with 3 ¼" of concrete cover over the top mat of reinforcing. The proposed partial depth reconstruction will provide the standard 9 ½" bridge deck thickness. The existing top mat of reinforcing bars will be removed and replaced to accommodate the standard 3" of concrete cover. The existing 2-rail bridge railing and curb will be removed and replaced with single-slope concrete barrier on the south side of the bridge. The existing 4-rail bridge railing, sidewalk and curb will be replaced with new sidewalk, curb and vertical-faced concrete parapet along the north side of the bridge. The existing pedestrian fence will be removed and replaced along the bridge. The existing elastomeric bridge joints will be replaced with new

armorless bridge joints. This option would provide a service life of 35 years to the bridge deck. The construction cost of this option is $ 0.663 million.

Option 3 – Bridge Deck Replacement with Cast-In-Place Concrete

This option would involve the complete removal of the bridge deck, elastomeric bridge deck joints, sidewalk with curb on the north side of the bridge, and 2-rail and 4-rail bridge rail with pedestrian fencing along both sides of the bridge. The bridge deck would be replaced with a new concrete deck, new sidewalk and curb with vertical faced parapet concrete barrier and pedestrian fencing on the north side of the bridge and single-slope concrete barrier and pedestrian fencing on top of the barrier on the south side of the bridge and new armorless bridge joints. The new bridge deck would be 9 ½" standard thickness as compared to the 9 ¼" existing thickness. This option would provide a service life of 40 years to the bridge deck. The construction cost of this option is $ 0.807 million.

Option 4 – Bridge Deck Replacement with Pre-cast Concrete Deck Panels

This option will have the highest construction cost of all the options; however, traffic control costs may be lower due to the reduced construction time. Comparison of accelerated construction versus conventional construction is beyond the scope of work for this project at this time.

IN-DEPTH INSPECTION REPORT

D031085 P.I.N. 3501.60

B.I.N. 1064689

TEAM LEADER Andrew J. Fuller, P.E. 59848
NYSPE LICENSE #

ASSISTANT TEAM LEADER Charles Brooks, P.E.
ASSISTANT TEAM LEADER Logan Bessel
ASSISTANT TEAM LEADER Jerome Getter

FEATURE CARRIED Thompson Road (Route 635)
FEATURE CROSSED I - 690

DATE FIELD WORK BEGAN January 20, 2014
DATE FIELD WORK COMPLETED February 4, 2014

TABLE OF CONTENTS

- TP 349 & 350
- IN-DEPTH CONDITION DOCUMENTATION
- IN-DEPTH PHOTO DOCUMENTATION
- ASBESTOS REPORT

TP 349 & TP 350

BRIDGE ELEMENT RATINGS

Inspection Date: 8/2/2012 RC: 33 BIN: 1064689

Bridge Ratings

Carried: 635 635 33101002 Crossed: 690I 690I33013000 CheckValue: 1,778,702,794

Inspection Agency: 10 - NYSDOT Type of Inspection: 1 - BIENNIAL
GTMS: 302 -- Steel - Stringer/Multi-Beam or Girder
POSTINGS: See Gen Rec Page 1 for Postings at time of inspection.
Further Investigation Needed: No
State Highway Number: 68-04 Milepoint: 1100.19 AADT/Yr: 27238 / 2002
Orientation: 1 - North Political Unit: 1147 - Village of EAST SYRACUSE Year Built: 1971
Total Spans: 4 Ramp Bridge Attached To Span: NA BIN: NA
General Recommendation: 5 Computed Condition Rating: 4.153

Abutment Ratings:	Beg Abut	End Abut
Joint with Deck	8	4
Bearings, Bolts, Pads	4	4
Seats and Pedestals	5	5
Backwall	4	3
Stem (Breastwall)	5	5
Erosion or Scour	5	6
Footings	9	9
Piles	9	9
Recommendation	5	5

Wingwall Ratings:	Beg Abut	End Abut
Walls	4	4
Footings	9	9
Erosion or Scour	6	6
Piles	9	9

Channel Ratings:	Channel
Stream Alignment	8
Erosion and Scour	8
Waterway Opening	8
Bank Protection	8

Approach Ratings:	Approaches
Drainage	5
Embankment	5
Settlement	4
Erosion	5
Pavement	4
Guide Railing	4

Number of Flags Issued:

RED: 0 Yellow: 0 Safety: 0

Vulnerability Reviews Recommended: 1=Yes, 2=No, 3=NA, X=NotActive

Hydraulic: 3	Overload: X	Steel: 2
Collision: 2	Concrete: X	Seismic: X

Inspector's Signature: CheckValue: 1,778,702,794 Date: 8/2/2012

Bruce Opalka,PE () (Inspector ID:3000038)

Signed copy of this inspection report is available in the appropriate NYSDOT Regional Office

Reviewed By: Date: 10/1/2012

James R. Manning,PE () (QC ID:3000023)

Signed copy of this inspection report is available in the appropriate NYSDOT Regional Office

Inspection Date: 8/2/2012 RC: 33 BIN: 1064689

Span Ratings

Carried: 635 635 33101002 Crossed: 690I 690I33013000 CheckValue: 1,778,702,794

Deck Element Ratings:	001	002	003	004
Wearing Surface	4	4	4	4
Curbs	5	5	5	5
Sidewalks, Fascias	3	3	3	3
Railings, Parapets	4	4	4	4
Scuppers	8	6	6	6
Gratings	8	8	8	8
Median	5	5	5	5
Mono Deck Surface	5	4	5	5

Superstructure Ratings:	001	002	003	004
Structural Deck	4	4	4	4
Primary Members	5	5	5	5
Secondary Members	5	5	5	5
Paint	4	4	4	4
Joints	6	6	6	8
Recommendation	5	5	5	5

Pier Ratings:	001	002	003	004
Bearings, Bolts, Pads	4	4	4	8
Pedestals	4	3	3	8
Top of Cap or Beam	5	5	5	8
Stem Solid Pier	8	8	8	8
Cap Beam	4	5	5	8
Pier Columns	4	5	5	8
Footings	9	9	9	8
Erosion or Scour	6	5	6	8
Piles	9	9	9	8
Recommendation	4	4	4	8

Utility Ratings:	001	002	003	004
Lighting	8	6	8	6
Sign Structure	6	8	8	5
Utilities and Support	8	8	8	8

Field Notes:

Field Date	Arrival	Departure	Temp (C)	Temp (F)	Weather Conditions
6/26/2012	2:00:00 PM	5:00:00 PM	21	70	sunny
7/11/2012	9:00:00 AM	3:00:00 PM	24	75	Sunny
8/2/2012	9:00:00 AM	3:00:00 PM	27	80	Sunny

IN-DEPTH CONDITION DOCUMENTATION

IN DEPTH INSPECTION REPORT

BIN 1064689

Visual Inspection

The bridge was constructed in 1971. Miscellaneous concrete repairs to the abutments and piers, a high density deck overlay, an armored joint system, and miscellaneous structural steel repairs were made in 1979 under contract D95879. In 1997 miscellaneous concrete repairs to the abutments and piers and armored joints were installed under contract D257576. Under contract D258737 in 2001 various girders were heat straightened, web cracks were repaired, and bent diaphragms were removed and replaced.

Cracks, spalls, and other field observations are shown on the plans. Below is a brief summary of conditions for each feature.

Superstructure

Deck – See Bridge Deck Evaluation Report

Steel – See Structural Steel Inspection Summary

Bearings – Bearing elements typically have moderate rust with the fascia bearings typically having heavy rust.

Substructure

South Abutment – The concrete backwall contained minor isolated areas of delamination and cracking. The median joint between pedestals 6 and 7 on the backwall contained efflorescence. The stem contained cracks near pedestals 1 to 4 and 11 to 12, and a section of delaminated concrete between pedestals 4 and 5. Pedestals 2 and 8 displayed delaminated concrete and pedestal 4 had a crack on the east face. The east cheekwall was spalling next to pedestal 12. The southwest and southeast wingwalls contained sections of delaminated and spalling concrete.

Pier 1 – A majority of the pedestals contained areas of delaminated and spalling concrete with exposed rebar. On the cap beam above columns 1 and 2 areas of

delaminated concrete were observed. Columns 1 and 4 had delamination of the south faces and columns 1, 2, and 3 contained delamination of the west faces. Column 4 had delamination on the east face.

Pier 2 – Pedestals 1, 2, and 6 to 12 contained sections of delaminated or spalling concrete. The cap beam contained delamination on the south face beneath pedestals 1, 2, 4, and 7 to 9. The north face of the cap beam had delamination below pedestals 3, 7, and 11. The bottom face was delaminated between columns 1 and 2. All four columns had delamination on the south face, with columns 2 and 3 exhibiting delamination on the west face and columns 2 and 4 on the east face. Column 2 had a section of spall on the north face.

Pier 3 – Pedestals 1, 7, and 12 displayed areas of delaminated and spalling concrete. The cap beam had sections of delamination above columns 1, 2, and 3 on the south face and below pedestal 12 on the south and bottom faces. The cap beam also had areas of delamination above columns 1 and 2 on the north face and on the bottom face below pedestal 1. Columns 1 and 2 had delamination on the south, east, and north faces near the cap beam. Column 3 had an area of spall near the cap beam on the south face.

North Abutment – The concrete stem contained areas of delamination below pedestals 10 and 12 and map cracking near the median joint between pedestals 6 and 7. Pedestals 1 and 3 had sections of delamination. The backwall had severe sections of spall with exposed rebar behind pedestals 1 and 12. Delamination was observed from pedestals 1 to 4, and map cracking around the median joint between pedestals 6 and 7. The northeast and northwest wingwalls both contained map cracking with efflorescence.

STRUCTURAL STEEL INSPECTION SUMMARY

BIN 1064689

Special Emphasis Inspection Required

Non-Redundant/Fracture Critical Members – No

Pin and Hangers – No

Fatigue-Prone Welds – No

Non-Categorized Fatigue-Prone Details – No

Other (Specified in Text) – Yes

Special Emphasis Details

Staggered diaphragms on all spans were 100% hands on inspected. No defects were observed.

Overall Steel Condition

The steel showed no sign of major deterioration. There were no isolated pockets of major section loss and no areas of concern were observed. Surface rust was present along the bottom flanges and lower sections of the webs in all spans.

Paint

The paint was observed to be blistering and peeling in several locations, especially in the lower sections and bottom flanges of the steel.

Section Loss

Due to the age of the steel a blanket 5% section loss should be used in load rating.

D95879

FED. ROAD REG. NO.	STATE	FEDERAL AID PROJECT NO.	SHEET NO.	TOTAL SHEETS
1	N.Y.	I-IR-690-3(41) I-IR-481-2(135)	R1 155	160

INTERSTATE ROUTE CONNECTION 570
THOMPSON ROAD S.H. 429

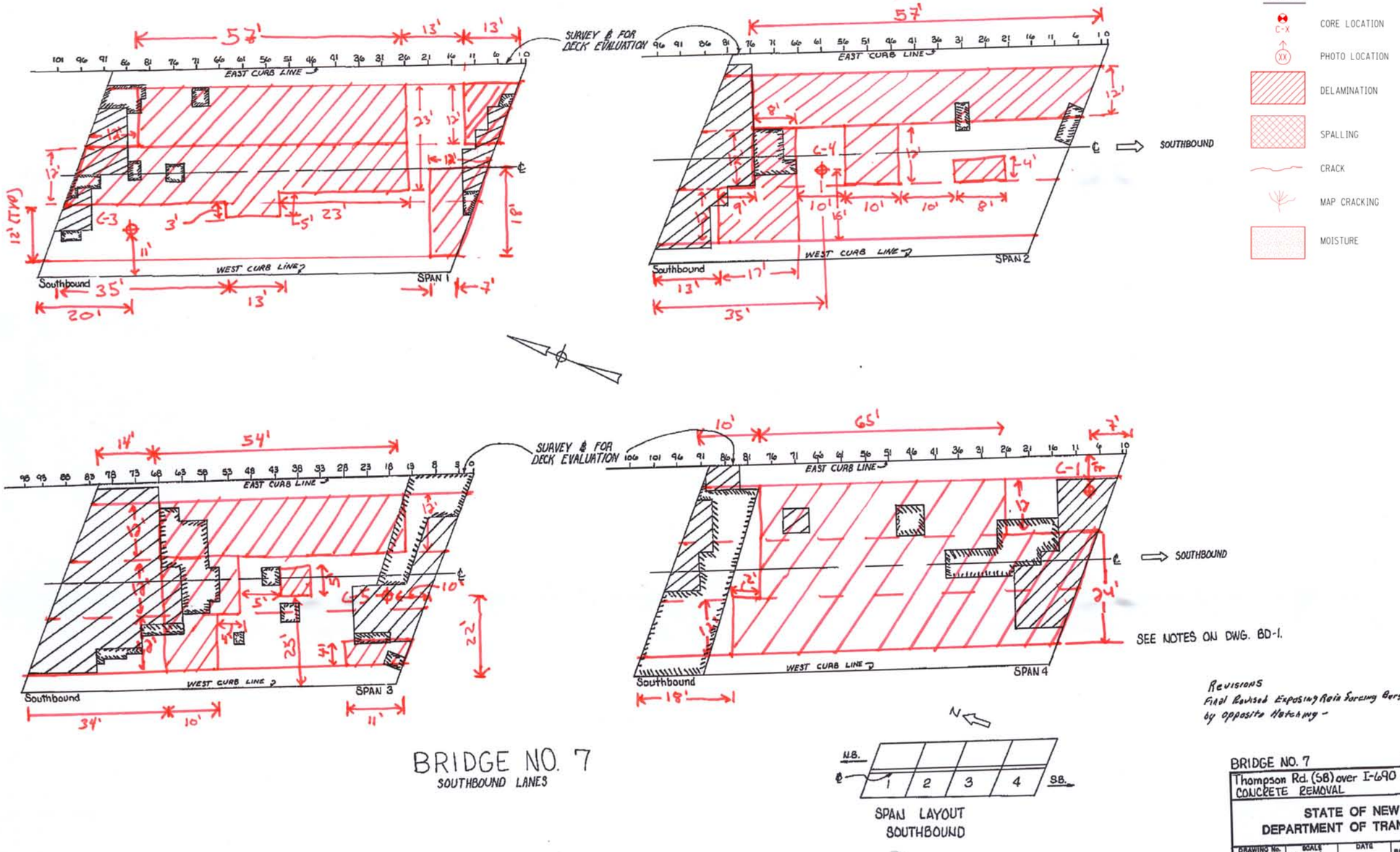

BRIDGE NO. 7
SOUTHBOUND LANES

Revisions
Final Revised Exposing Rain Forcing Bars As shown by opposite Hatching -

BRIDGE NO. 7 BIN 1064689
Thompson Rd. (SB) over I-690
CONCRETE REMOVAL

STATE OF NEW YORK
DEPARTMENT OF TRANSPORTATION

DRAWING No.	SCALE	DATE	REGION 3	Sheet No.
BD-10	1" = 10'			155R1

BIN 1064689
BRIDGE DECK (1 of 2)

IC 47-2 (5/76) IN CHARGE OF ... DESIGNED BY ... CHECKED BY ... ESTIMATED BY ... CHECKED BY ... DRAFTED BY ... CHECKED BY ... DATE May 78

D95879

FED. ROAD REG. NO.	STATE	FEDERAL AID PROJECT NO.	SHEET NO.	TOTAL SHEETS
1	N.Y.	I-IR-690-3(41) I-IR-481-2(135)	R-1 153	160

INTERSTATE ROUTE CONNECTION 570
THOMPSON ROAD S.H. 429

LEGEND

- CORE LOCATION
- PHOTO LOCATION
- DELAMINATION
- SPALLING
- CRACK
- MAP CRACKING
- MOISTURE

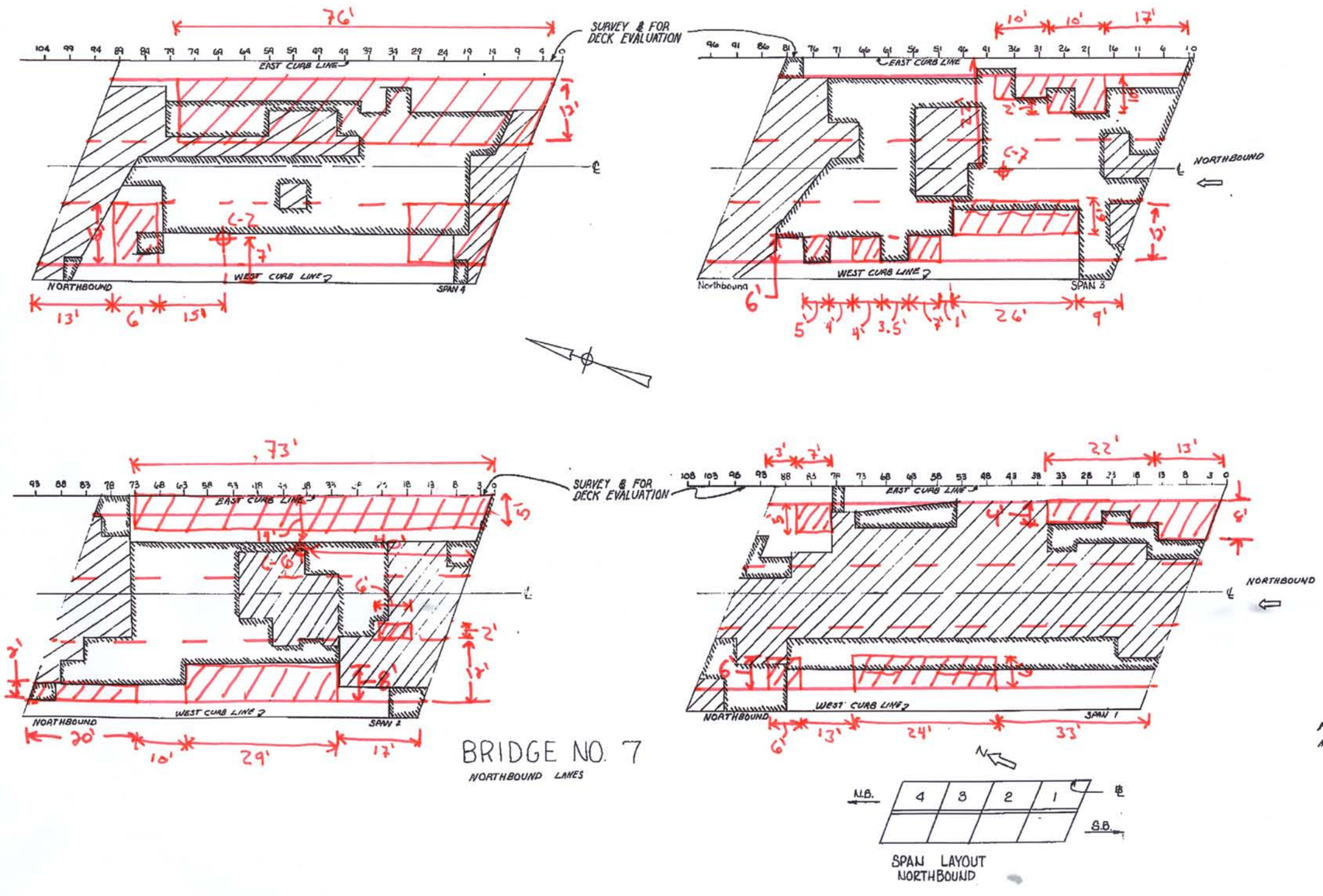

BRIDGE NO. 7
NORTHBOUND LANES

SPAN LAYOUT
NORTHBOUND

SEE NOTES ON DWG. BD-1

Final Revised Exposing Reinforcing Bars As shown by Opposite Hatching.-

BRIDGE NO. 7 BIN 1064689
Thompson Rd. (NB) over I-690
CONCRETE REMOVAL

STATE OF NEW YORK
DEPARTMENT OF TRANSPORTATION

DRAWING No.	SCALE	DATE	REGION	Sheet No.
BD-8	1" = 10'		3	153 R-1

IN CHARGE OF M.R. Greene DESIGNED BY R.C. Jackson CHECKED BY M.R. Greene ESTIMATED BY R.C. Jackson CHECKED BY D. Jeffs DRAFTED BY D.A.M. CHECKED BY R.C. Jackson DATE May 78

153

BIN 1064689
BRIDGE DECK (2 of 2)

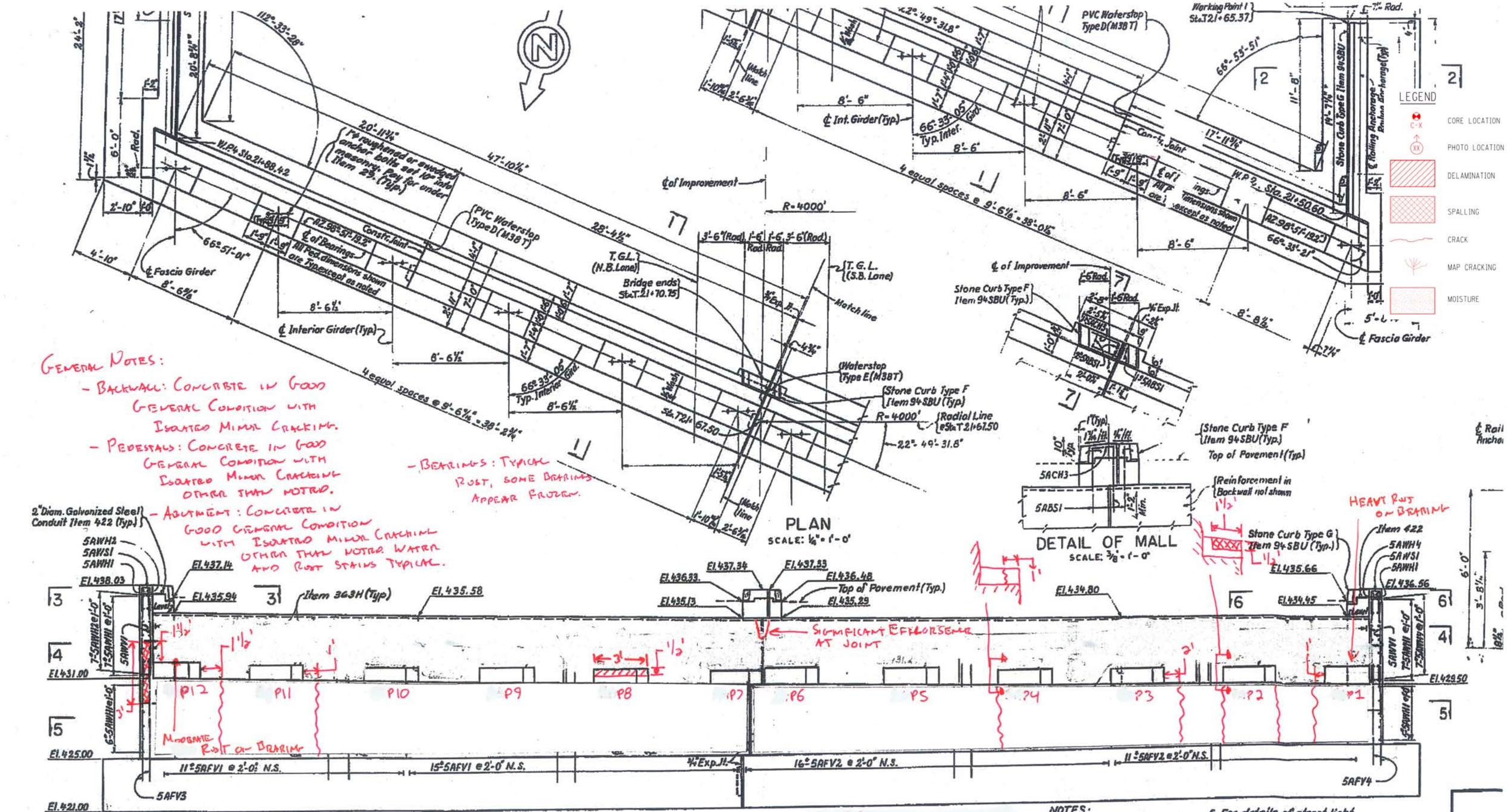

NOTES:
1. For bars not shown see Vertical and Horiz. sections Drawing No. 9 of 18
2. Piles are not shown
3. FOR BEARING DETAILS SEE COMMON DETAILS DWG 2 OF 5
4. FOR KEY DETAILS SEE COMMON DETAILS DWG. 4 OF 5
5. For details of street light conduit thru Wingwalls see Dwg. 11 of 18.

PROJECT ENGINEER A. Karplak
IN CHARGE OF L. H. Turner
DESIGNED BY O. Kozmis
DESIGN CHECKED BY R.W. Perry
DETAILED BY O. Kenić
DETAIL CHECKED BY M. Sosiek

S. ABUTMENT

THOMPSON ROAD OVER I-690 1064689

THOMPSON ROAD OVER I-690

F.I.S.H. 68-4

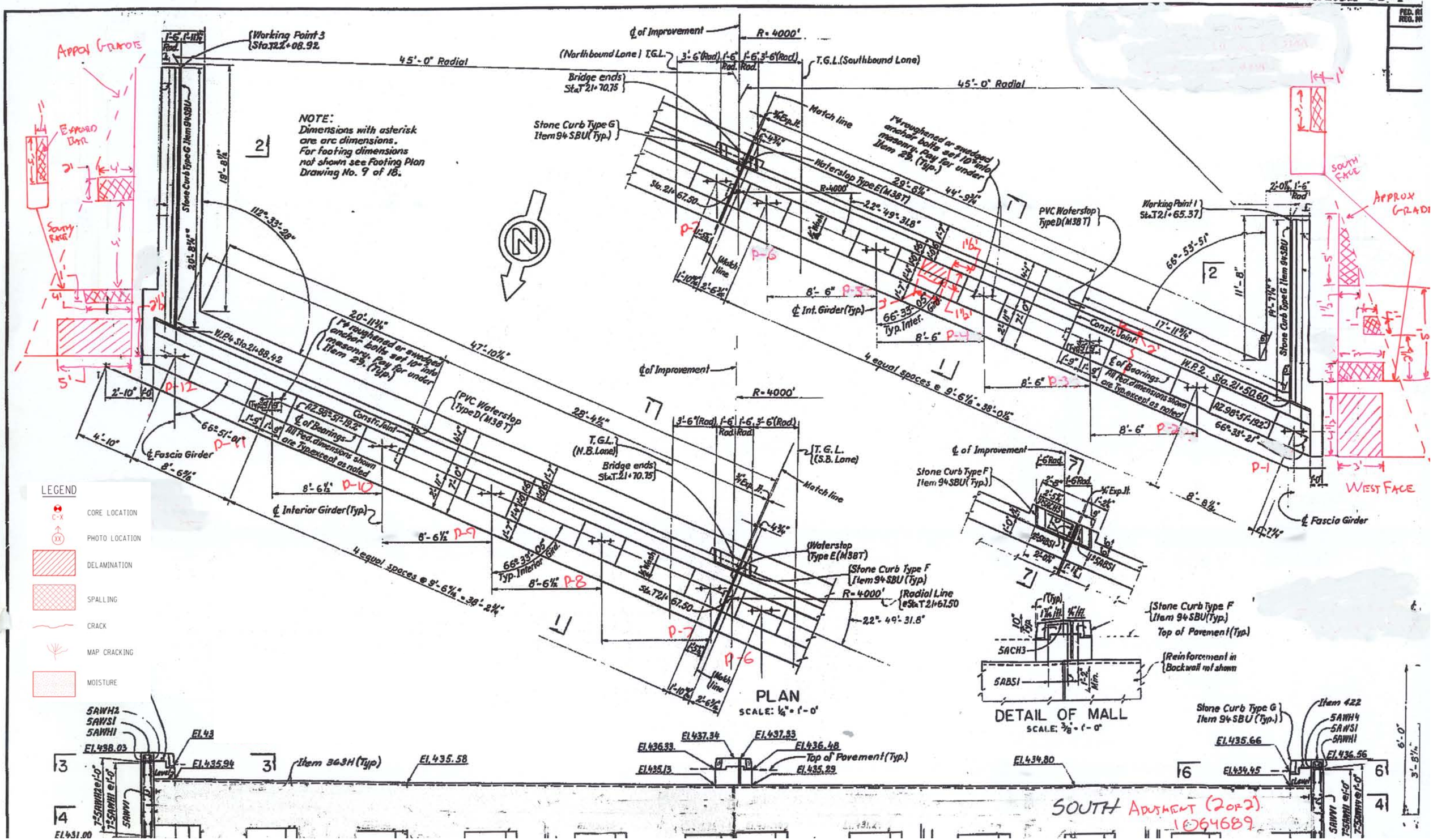

LEGEND

- CORE LOCATION (C-X)
- PHOTO LOCATION (XX)
- DELAMINATION
- SPALLING
- CRACK
- MAP CRACKING
- MOISTURE

THOMPSON ROAD OVER I-690

PIER 1 SOUTH FACE
1064689

F.I.S.H. 68-4

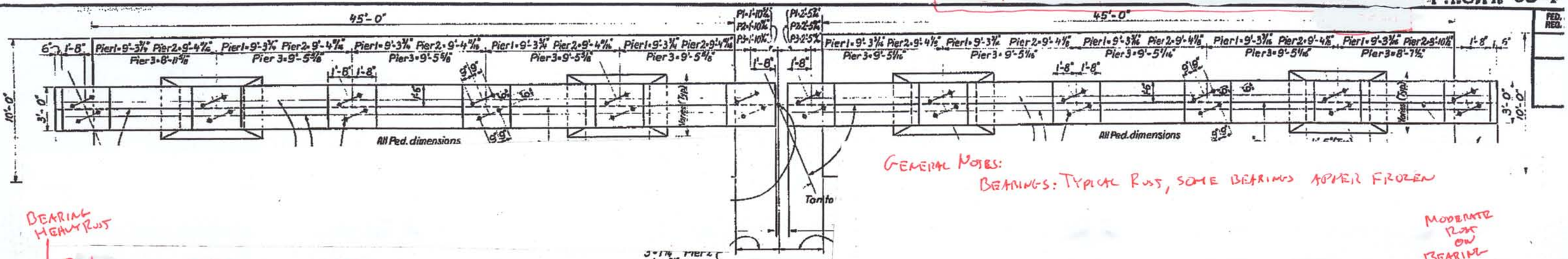

GENERAL NOTES:
BEARINGS: TYPICAL RUST, SOME BEARINGS APPEAR FROZEN

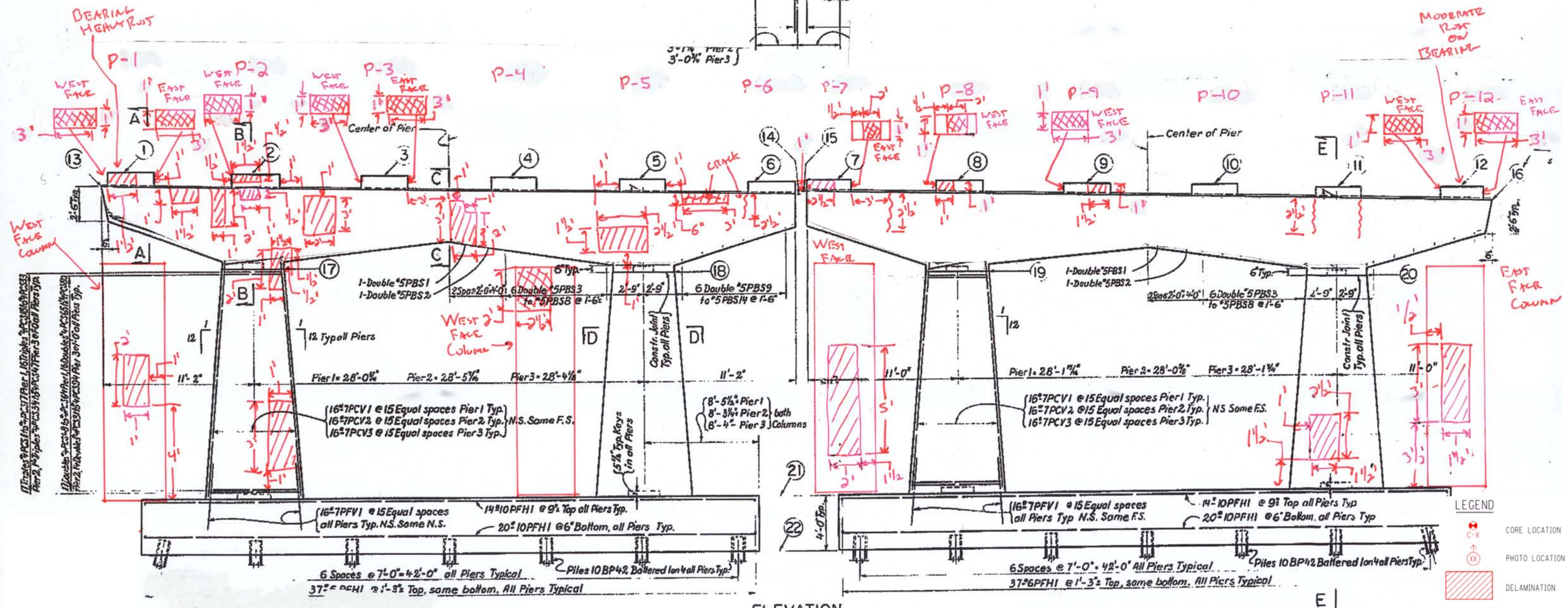

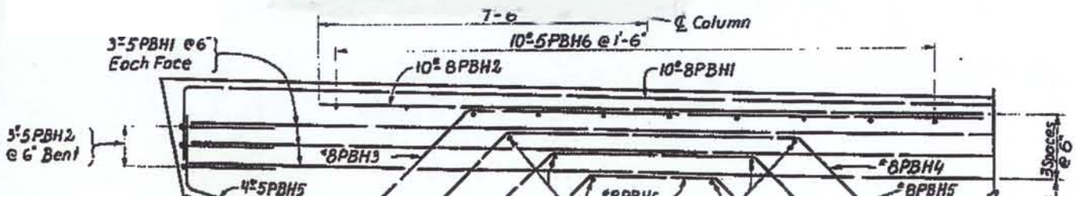

ELEVATION
SCALE: ¼" = 1'-0"



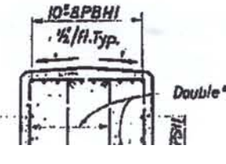

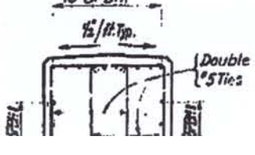

LEGEND
C-X CORE LOCATION
(XX) PHOTO LOCATION
DELAMINATION
SPALLING
CRACK
MAP CRACKING
MOISTURE

PIER 1 NORTH FACE
EB ACCESS ROAD 1064689

F.I.S.H. 68-4

REPLACE PEDESTAL LARGE SPALL ON EAST SIDE & NUMEROUS CRACKS IN REMAINING PORTION. REBAR EXPOSED IN SPALL AREAS

SPALL 1½" DEEP

All Ped. dimensions

FULL WIDTH CRACKS

CRACK IN FACE

CRACK & SPALL 1"D IN FACE 6"x1'-6"

CRACK IN FACE & SPALL 6"x3'-0"

CRACK IN FACE & SPALL 6"x3'-0"

PLAN
SCALE: ¼"=1'-0"

NOTE:
Reinforcement in Cap Beam and Footing is Typical in all Piers. Reinforcement in Columns is Typical in each Pier.

All footing reinforcement - 3"
All columns, cap beams and pedestals - 2"

NOTE:
All edges of pedestals, cap beams and columns to be chamfered 1"

Note:
For Downspo
Details, (Ite
See Dwg. N
Common De

Center of Pier

Reinforcement symmetrical about Center of Pier (Typ.)

EXPOSED REBAR

1-Double #5PBS1
1-Double #5PBS2
2 Spaces 2'-0"+4'-0"
6 Double #5PBS3 to #5PBS8 @ 1'-6"
6 Double #5PBS9 to #5PBS14 @ 1'-6"

1 on 12 Typ all Piers

Pier 1 = 28'-0⅞"
Pier 2 = 28'-5⅞"
Pier 3 = 28'-4⅛"

16 #7PCV1 @ 15 Equal spaces Pier 1 Typ.
16 #7PCV2 @ 15 Equal spaces Pier 2 Typ.
16 #7PCV3 @ 15 Equal spaces Pier 3 Typ.
N.S. Same F.S.

8'-5¼" Pier 1
8'-3¼" Pier 2
8'-4" Pier 3
both Columns

5¼" Typ. Keys in all Piers

Constr. Joint Typ. all Piers

16 #7PFV1 @ 15 Equal spaces all Piers Typ. N.S. Same N.S.

14 #10PFH1 @ 9" Top all Piers Typ.

20 #10PFH1 @ 6" Bottom, all Piers Typ.

6 Spaces @ 7'-0" = 42'-0" all Piers Typical

Piles 10 BP42 Battered 1 on 4 all Piers Typ.

37 #6PFH1 @ 1'-3" Top, same bottom. All Piers Typical

ELEVATION
SCALE: ¼" = 1'-0"

3 #5PBH1 @ 6" Each Face
3 #5PBH2 @ 6" Bent
4 #5PBH5
7'-6"
℄ Column
10 #5PBH6 @ 1'-6"
10 #8PBH2
10 #8PBH1
#8PBH3
#8PBH4
#8PBH5
3 Spaces @ 6"

10 #8PBH1
1½/ft. Typ.
Double #5 Ties

LEGEND
CORE LOCATION
PHOTO LOCATION
DELAMINATION
SPALLING
CRACK
MAP CRACKING
MOISTURE

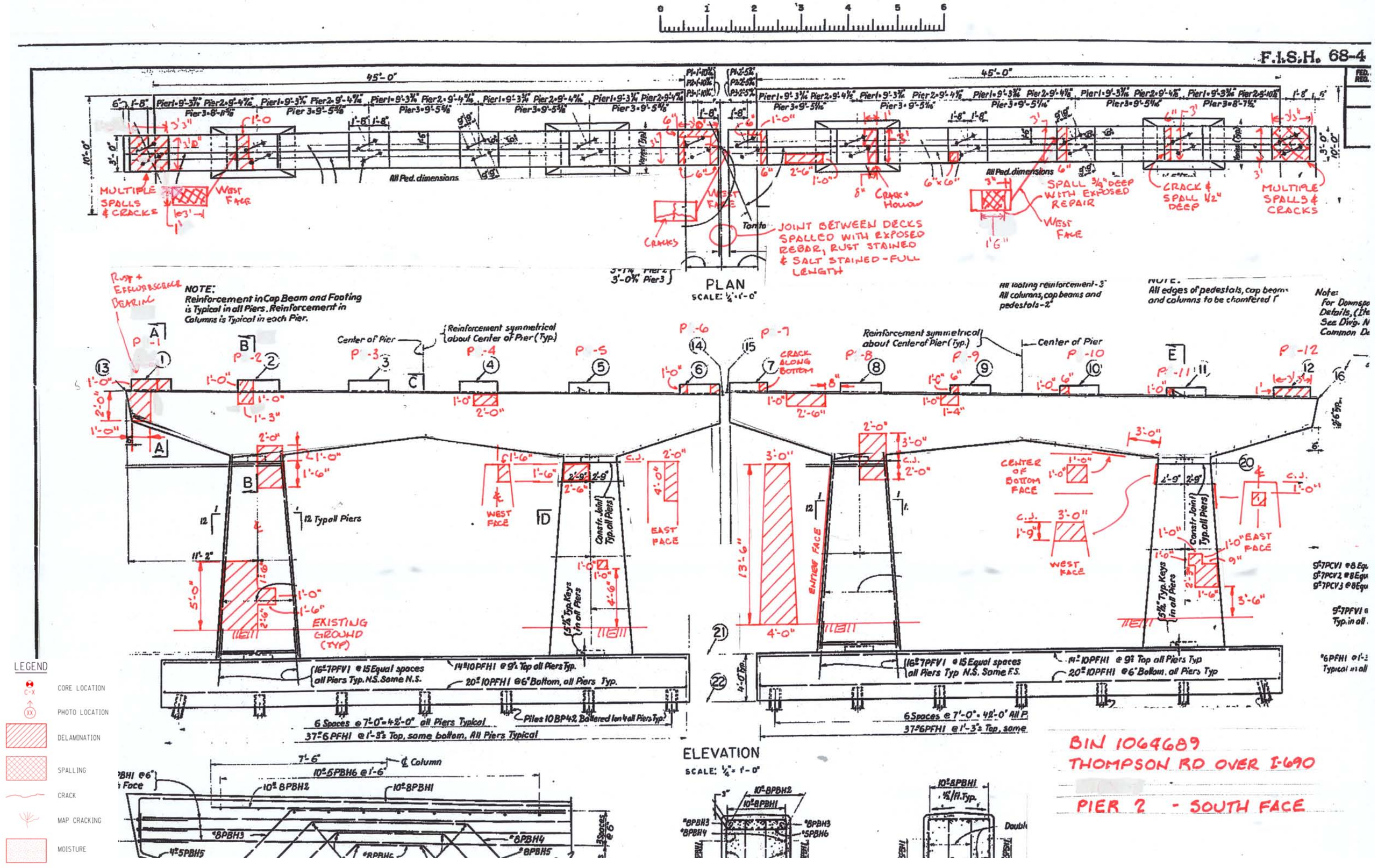
F.I.S.H. 68-4
45'-0"
MULTIPLE SPALLS & CRACKS
WEST FACE
All Ped. dimensions
CRACKS
JOINT BETWEEN DECKS SPALLED WITH EXPOSED REBAR, RUST STAINED & SALT STAINED - FULL LENGTH
CRACK + HOLLOW
SPALL 3/4" DEEP WITH EXPOSED REPAIR
CRACK & SPALL 1/2" DEEP
MULTIPLE SPALLS & CRACKS
PLAN
SCALE: 1/4" = 1'-0"
NOTE:
Reinforcement in Cap Beam and Footing is Typical in all Piers. Reinforcement in Columns is Typical in each Pier.
All footing reinforcement - 3"
All columns, cap beams and pedestals - 2"
All edges of pedestals, cap beams and columns to be chamfered 1"
Center of Pier
Reinforcement symmetrical about Center of Pier (Typ.)
CRACK ALONG BOTTOM
12 Typ all Piers
EXISTING GROUND (TYP)
WEST FACE
EAST FACE
Constr. Joint Typ. all Piers
ENTIRE FACE
CENTER OF BOTTOM FACE
16"-7PFV1 @ 15 Equal spaces all Piers Typ. N.S. Same N.S.
14"-10PFH1 @ 9" Top all Piers Typ.
20"-10PFH1 @ 6" Bottom, all Piers Typ.
6 Spaces @ 7'-0" = 42'-0" all Piers Typical
37"-6PFH1 @ 1'-3" Top, same bottom. All Piers Typical
Piles 10BP42 Battered 1 on 4 all Piers Typ.
ELEVATION
SCALE: 1/4" = 1'-0"
BIN 1064689
THOMPSON RD OVER I-690
PIER 2 - SOUTH FACE
LEGEND
CORE LOCATION
PHOTO LOCATION
DELAMINATION
SPALLING
CRACK
MAP CRACKING
MOISTURE

F.I.S.H. 68-4

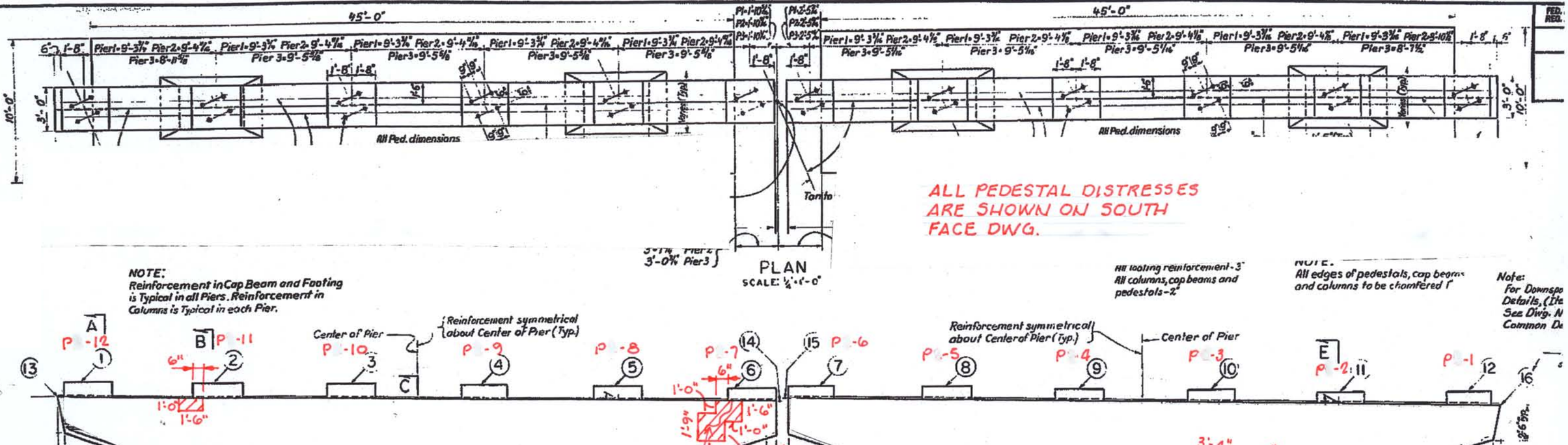

ALL PEDESTAL DISTRESSES ARE SHOWN ON SOUTH FACE DWG.

NOTE:
Reinforcement in Cap Beam and Footing is Typical in all Piers. Reinforcement in Columns is Typical in each Pier.

All footing reinforcement - 3"
All columns, cap beams and pedestals - 2"

NOTE:
All edges of pedestals, cap beams and columns to be chamfered 1"

Note:
For Downspo
Details, (The
See Dwg. N
Common De

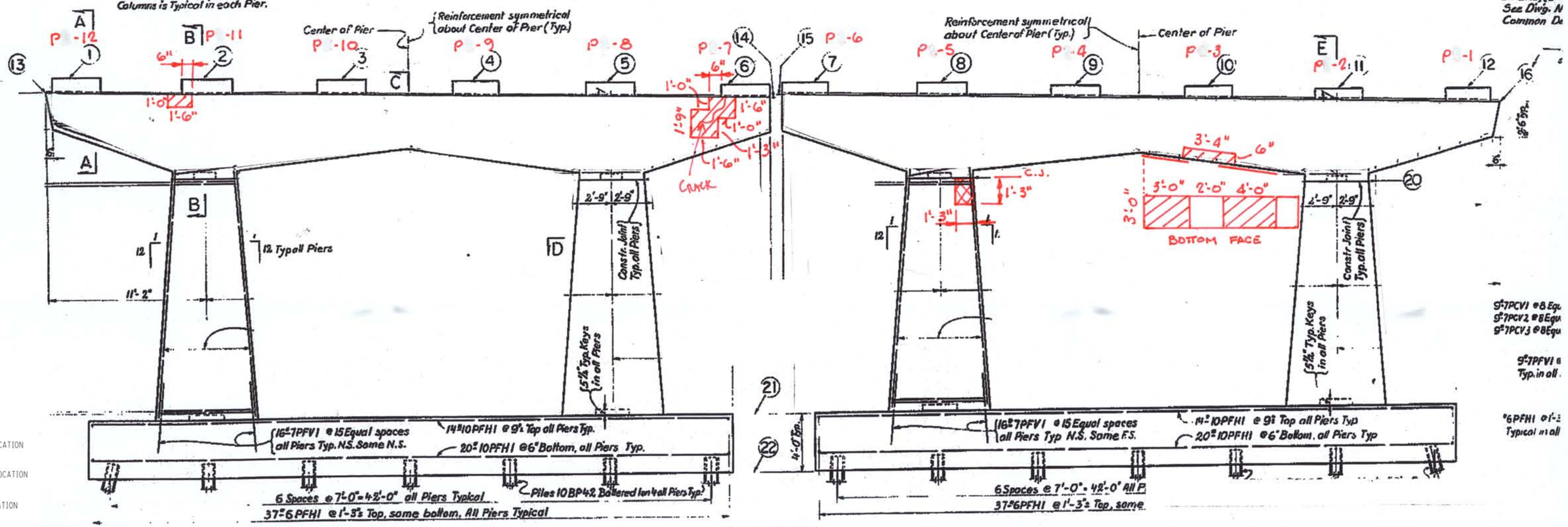

LEGEND

- C-X — CORE LOCATION
- XX — PHOTO LOCATION
- DELAMINATION
- SPALLING
- CRACK
- MAP CRACKING
- MOISTURE

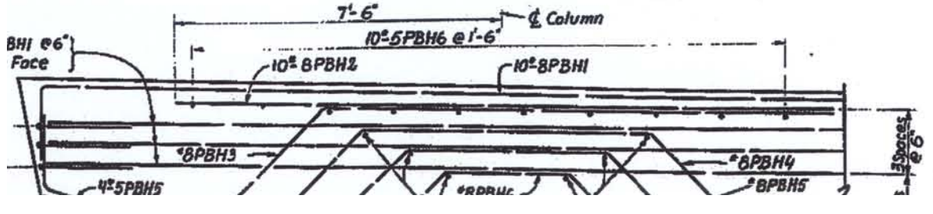

ELEVATION
SCALE: ½" = 1'-0"





BIN 1064689
THOMPSON RD OVER I-690
PIER 2 - NORTH FACE

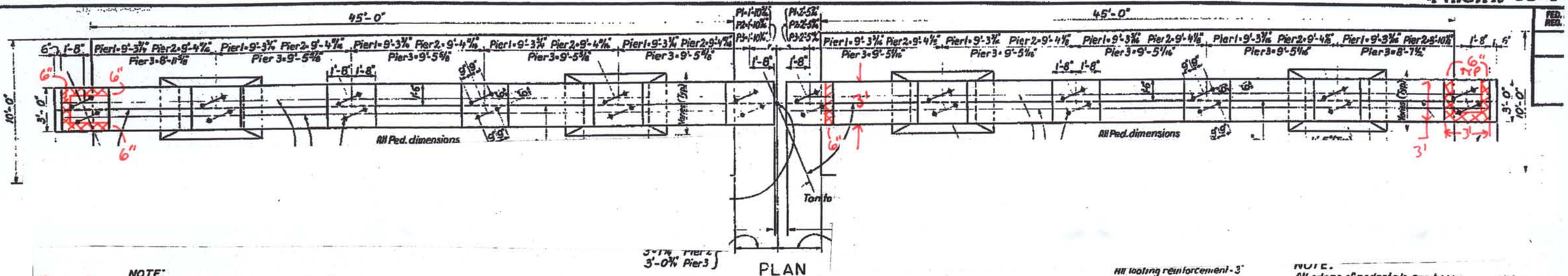

NOTE:
Reinforcement in Cap Beam and Footing is Typical in all Piers. Reinforcement in Columns is Typical in each Pier.

All footing reinforcement - 3"
All columns, cap beams and pedestals - 2"

NOTE:
All edges of pedestals, cap beams and columns to be chamfered 1"

Note:
For Downspo
Details, (Ite
See Dwg. N
Common De

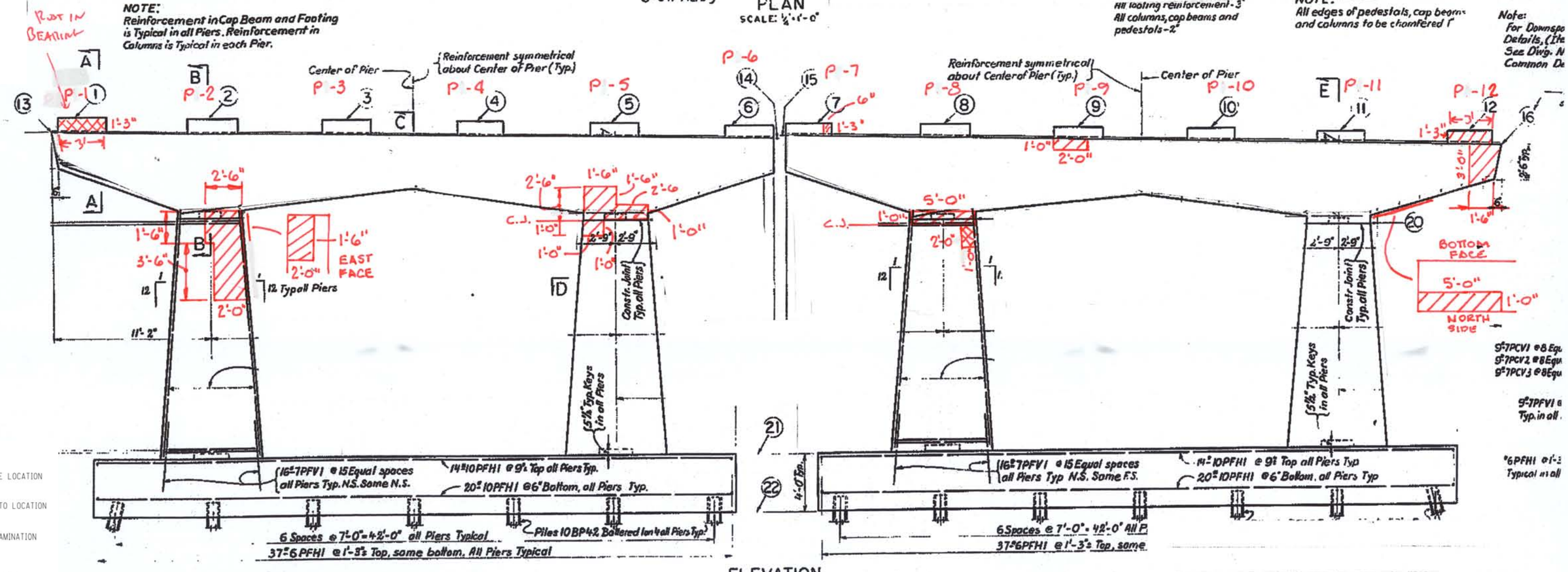

LEGEND

- CORE LOCATION (C-X)
- PHOTO LOCATION (XX)
- DELAMINATION
- SPALLING
- CRACK
- MAP CRACKING
- MOISTURE

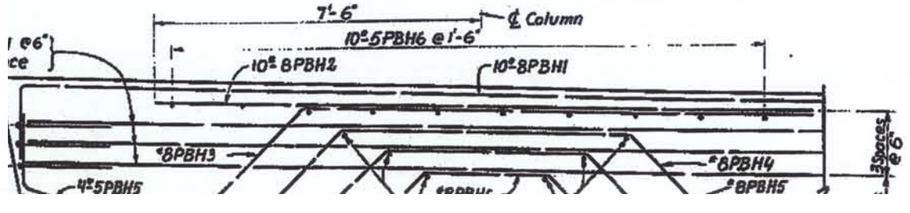

ELEVATION
SCALE: 1/4" = 1'-0"





BIN 1064689
THOMPSON RD. OVER I-690
PIER 3 - SOUTH FACE

F.I.S.H. 68-4

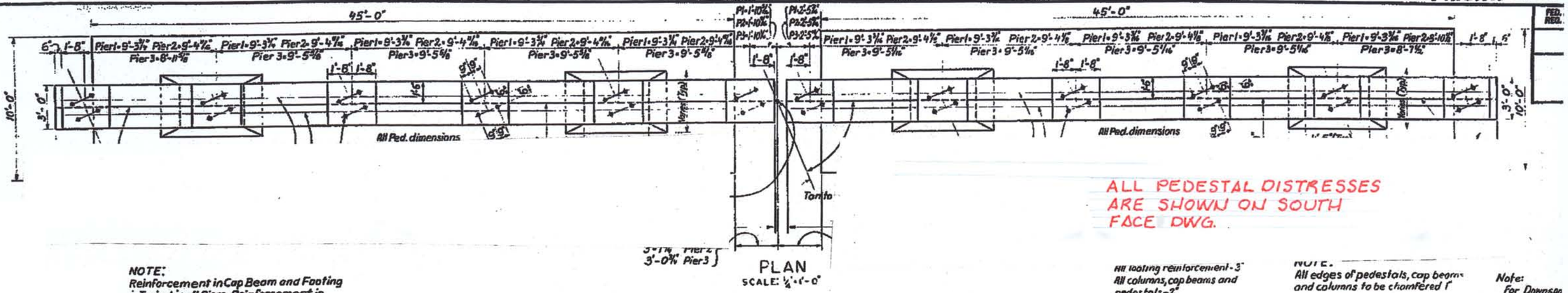

ALL PEDESTAL DISTRESSES ARE SHOWN ON SOUTH FACE DWG.

NOTE:
Reinforcement in Cap Beam and Footing is Typical in all Piers. Reinforcement in Columns is Typical in each Pier.

All footing reinforcement - 3"
All columns, cap beams and pedestals - 2"

NOTE:
All edges of pedestals, cap beams and columns to be chamfered 1"

Note:
For Downspo
Details, (Ite
See Dwg. N
Common De

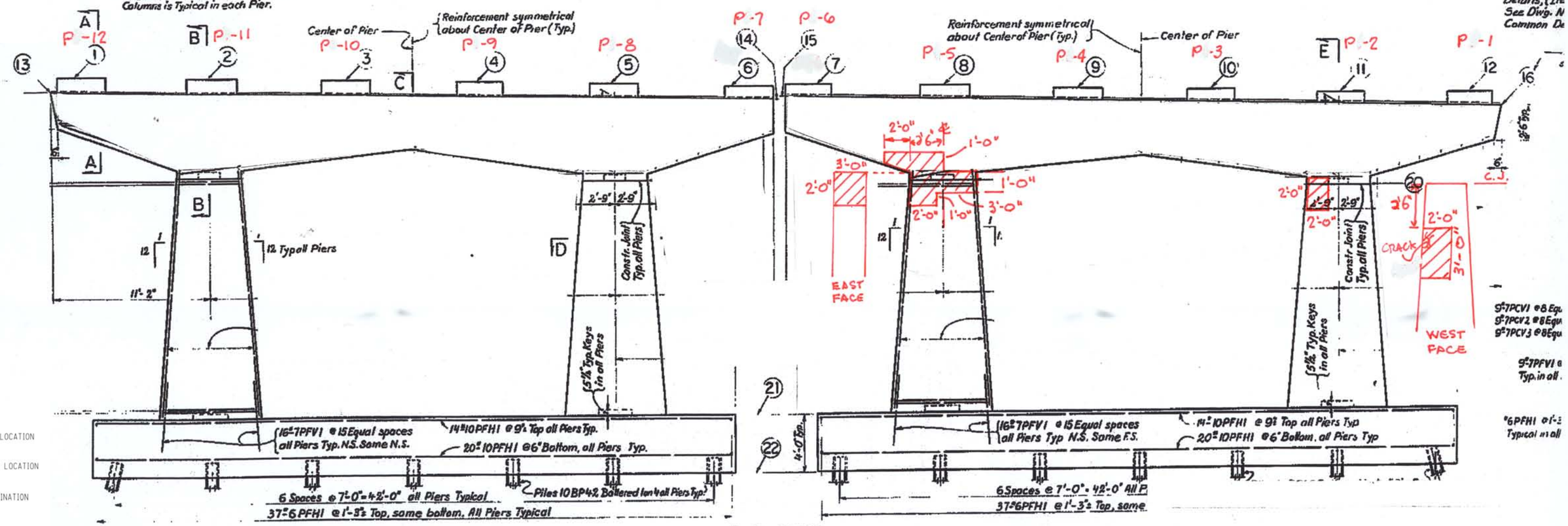

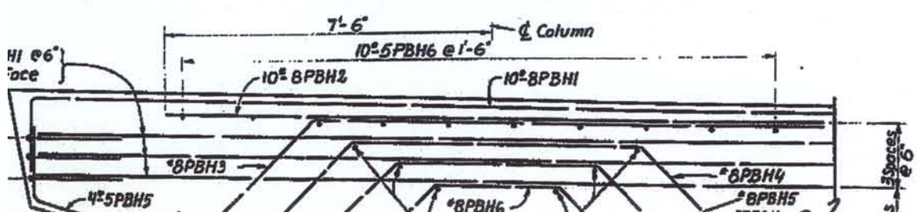





LEGEND

- C-X — CORE LOCATION
- XX — PHOTO LOCATION
- DELAMINATION
- SPALLING
- CRACK
- MAP CRACKING
- MOISTURE

BIN 1064689
THOMPSON RD OVER I-690
PIER 3 - NORTH FACE

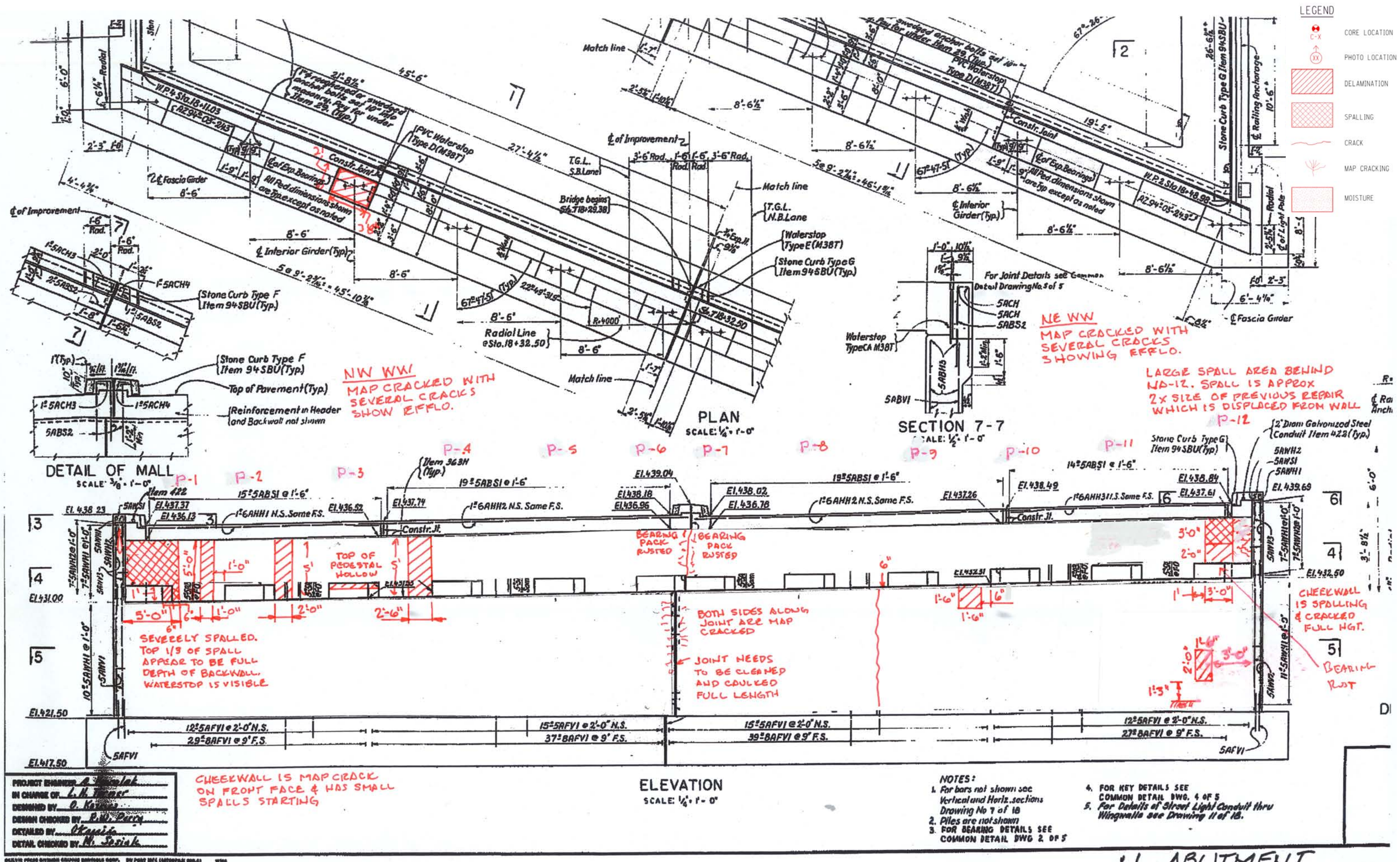
LEGEND
CORE LOCATION
PHOTO LOCATION
DELAMINATION
SPALLING
CRACK
MAP CRACKING
MOISTURE
PLAN
SCALE: 1/4" = 1'-0"
SECTION 7-7
SCALE: 1/2" = 1'-0"
DETAIL OF MALL
SCALE: 3/8" = 1'-0"
ELEVATION
SCALE: 1/4" = 1'-0"
NW WW
MAP CRACKED WITH SEVERAL CRACKS SHOW EFFLO.
NE WW
MAP CRACKED WITH SEVERAL CRACKS SHOWING EFFLO.
LARGE SPALL AREA BEHIND NA-12. SPALL IS APPROX 2X SIZE OF PREVIOUS REPAIR WHICH IS DISPLACED FROM WALL
SEVERELY SPALLED. TOP 1/3 OF SPALL APPEAR TO BE FULL DEPTH OF BACKWALL. WATERSTOP IS VISIBLE
TOP OF PEDESTAL HOLLOW
BEARING PACK RUSTED
BOTH SIDES ALONG JOINT ARE MAP CRACKED
JOINT NEEDS TO BE CLEANED AND CAULKED FULL LENGTH
CHEEKWALL IS SPALLING & CRACKED FULL HGT.
BEARING ROOT
CHEEKWALL IS MAP CRACK ON FRONT FACE & HAS SMALL SPALLS STARTING
NOTES:
1. For bars not shown see Vertical and Horiz. sections Drawing No 7 of 18
2. Piles are not shown
3. FOR BEARING DETAILS SEE COMMON DETAIL DWG 2 OF 5
4. FOR KEY DETAILS SEE COMMON DETAIL DWG. 4 OF 5
5. For Details of Street Light Conduit thru Wingwalls see Drawing 11 of 18.
PROJECT ENGINEER
IN CHARGE OF
DESIGNED BY
DESIGN CHECKED BY
DETAILED BY
DETAIL CHECKED BY
N. ABUTMENT
BIN 1064689
THOMPSON ROAD OVER I-690

IN-DEPTH PHOTO DOCUMENTATION

C&S Engineers, Inc.
499 Col. Eileen Collins Blvd.
Syracuse, New York 13212
Phone: (315) 455-2000
Fax: (315) 455-9667
www.cscos.com

Thompson Rd (635) over I-690 - BIN 1064689



DESCRIPTION: SOUTH ABUTMENT – BEARING 1 – HEAVY RUST

PHOTO 1



DESCRIPTION: SOUTH ABUTMENT – STEM – CRACKS BELOW PEDESTALS 1 AND 2

PHOTO 2

ID Numbers in Photo's are for field use only.

C&S Engineers, Inc.
499 Col. Eileen Collins Blvd.
Syracuse, New York 13212
Phone: (315) 455-2000
Fax: (315) 455-9667
www.cscos.com

Thompson Rd (635) over I-690 - BIN 1064689



DESCRIPTION: SOUTH ABUTMENT – PEDESTAL 2 – EAST FACE – SPALLING CONCRETE

PHOTO 3



DESCRIPTION: SOUTH ABUTMENT – PEDESTAL 4 – EAST FACE - CRACK

PHOTO 4

ID Numbers in Photo's are for field use only.

C&S Engineers, Inc.
499 Col. Eileen Collins Blvd.
Syracuse, New York 13212
Phone: (315) 455-2000
Fax: (315) 455-9667
www.cscos.com

Thompson Rd (635) over I-690 - BIN 1064689



DESCRIPTION: SOUTH ABUTMENT – TOP OF STEM – BETWEEN PEDESTALS 4 AND 5 – DELAMINATED CONCRETE

PHOTO 5



DESCRIPTION: SOUTH ABUTMENT – BACKWALL – BETWEEN PEDESTALS 6 AND 7 – EFFLORESCENCE AROUND BRIDGE DECK JOINT

PHOTO 6

ID Numbers in Photo's are for field use only.

C&S Engineers, Inc.
499 Col. Eileen Collins Blvd.
Syracuse, New York 13212
Phone: (315) 455-2000
Fax: (315) 455-9667
www.cscos.com

Thompson Rd (635) over I-690 - BIN 1064689



DESCRIPTION: SOUTH ABUTMENT – PEDESTAL 8 – DELAMINATED CONCRETE AND RUST STAINS

PHOTO 7



DESCRIPTION: SOUTH ABUTMENT – BEARING 12 – MODERATE RUST

PHOTO 8

ID Numbers in Photo's are for field use only.

C&S Engineers, Inc.
499 Col. Eileen Collins Blvd.
Syracuse, New York 13212
Phone: (315) 455-2000
Fax: (315) 455-9667
www.cscos.com

Thompson Rd (635) over I-690 - BIN 1064689



DESCRIPTION: SOUTH ABUTMENT – BACKWALL – BETWEEN PEDESTALS 3 AND 4 - TYPICAL

PHOTO 9



DESCRIPTION: SOUTH ABUTMENT – BEARING 11 – RUST

(TYPICAL FOR INNER BEARINGS)

PHOTO 10

ID Numbers in Photo's are for field use only.

C&S Engineers, Inc.
499 Col. Eileen Collins Blvd.
Syracuse, New York 13212
Phone: (315) 455-2000
Fax: (315) 455-9667
www.cscos.com

Thompson Rd (635) over I-690 - BIN 1064689



DESCRIPTION: SOUHTWEST WINGWALL – FACING NORTHEAST – SPALLING CONCRETE

PHOTO 11



DESCRIPTION: SOUTHWEST WINGWALL – FACING NORTHEAST – DELAMINATED AND SPALLING CONCRETE

PHOTO 12

ID Numbers in Photo's are for field use only.

C&S Engineers, Inc.
499 Col. Eileen Collins Blvd.
Syracuse, New York 13212
Phone: (315) 455-2000
Fax: (315) 455-9667
www.cscos.com

Thompson Rd (635) over I-690 - BIN 1064689



DESCRIPTION: SOUTHEAST WINGWALL – FACING SOUTHWEST – DEALMINATED AND SPALLING CONCRETE

PHOTO 13



DESCRIPTION: SOUTHEAST WINGWALL – FACING WEST – SPALLING CONCRETE AND EXPOSED BAR

PHOTO 14

ID Numbers in Photo's are for field use only.

C&S Engineers, Inc.
499 Col. Eileen Collins Blvd.
Syracuse, New York 13212
Phone: (315) 455-2000
Fax: (315) 455-9667
www.cscos.com

Thompson Rd (635) over I-690 - BIN 1064689



DESCRIPTION: PIER 1 – LOOKING NORTHEAST – DELAMINATED CONCRETE AND MINOR RUST/MISSING PAINT ON BEAM

PHOTO 15



DESCRIPTION: PIER 1 – BEARING 1 – HEAVY RUST

PHOTO 16

ID Numbers in Photo's are for field use only.

C&S Engineers, Inc.
499 Col. Eileen Collins Blvd.
Syracuse, New York 13212
Phone: (315) 455-2000
Fax: (315) 455-9667
www.cscos.com

Thompson Rd (635) over I-690 - BIN 1064689



DESCRIPTION: PIER 1 – COLUMN 1 – SOUTHEAST CORNER AT CAP BEAM – CRACKING AND DELAMINATED CONCRETE

PHOTO 17



DESCRIPTION: PIER 1 – PEDESTAL 3 – EAST FACE – SPALLED CONCRETE

PHOTO 18

ID Numbers in Photo's are for field use only.

C&S Engineers, Inc.
499 Col. Eileen Collins Blvd.
Syracuse, New York 13212
Phone: (315) 455-2000
Fax: (315) 455-9667
www.cscos.com

Thompson Rd (635) over I-690 - BIN 1064689



DESCRIPTION: PIER 1 – CAP BEAM BETWEEN COLUMN 1 AND 2 – SOUTH FACE – CRACKED AND DELAMINATED CONCRETE

PHOTO 19



DESCRIPTION: PIER 1 – COLUMN 2 – SOUTH AND WEST FACE – MINOR SPALLING AND DELAMINATED CONCRETE

PHOTO 20

ID Numbers in Photo's are for field use only.

C&S Engineers, Inc.
499 Col. Eileen Collins Blvd.
Syracuse, New York 13212
Phone: (315) 455-2000
Fax: (315) 455-9667
www.cscos.com

Thompson Rd (635) over I-690 - BIN 1064689



DESCRIPTION: PIER 1 – CAP BEAM BETWEEN PEDESTAL 5 AND 6 – SOUTH FACE – CRACKED AND DELAMINATED CONCRETE

PHOTO 21



DESCRIPTION: PIER 1 – PEDESTAL 7 – SOUTH FACE – DELAMINATED CONCRETE

PHOTO 22

ID Numbers in Photo's are for field use only.

C&S Engineers, Inc.
499 Col. Eileen Collins Blvd.
Syracuse, New York 13212
Phone: (315) 455-2000
Fax: (315) 455-9667
www.cscos.com

Thompson Rd (635) over I-690 - BIN 1064689



DESCRIPTION: PIER 1 – PEDESTAL 8 – SOUTH FACE – CRACKED CONCRETE WITH MINOR SPALLING

PHOTO 23



DESCRIPTION: PIER 1 – COLUMN 3 – WEST FACE – DELAMINATED CONCRETE

PHOTO 24

ID Numbers in Photo's are for field use only.

C&S Engineers, Inc.
499 Col. Eileen Collins Blvd.
Syracuse, New York 13212
Phone: (315) 455-2000
Fax: (315) 455-9667
www.cscos.com

Thompson Rd (635) over I-690 - BIN 1064689



DESCRIPTION: PIER 1 – PEDESTAL 11 – WEST FACE – SPALLED CONCRETE AND EXPOSED REBAR

PHOTO 25



DESCRIPTION: PIER 1 – PEDESTAL 12 – WEST FACE – SPALLED CONCRETE AND EXPOSED REBAR

PHOTO 26

ID Numbers in Photo's are for field use only.

C&S Engineers, Inc.
499 Col. Eileen Collins Blvd.
Syracuse, New York 13212
Phone: (315) 455-2000
Fax: (315) 455-9667
www.cscos.com

Thompson Rd (635) over I-690 - BIN 1064689



DESCRIPTION: PIER 1 – COLUMN 4 – EAST FACE – DELAMINATED CONCRETE

PHOTO 27



DESCRIPTION: PIER 1 – PEDESTAL 12 –EAST FACE – CRACKED CONCRETE – MINOR RUST ON BEAM AND BEARING ELEMENTS – TYPICAL AT EXTERIOR BEAMS

PHOTO 28

ID Numbers in Photo's are for field use only.

C&S Engineers, Inc.
499 Col. Eileen Collins Blvd.
Syracuse, New York 13212
Phone: (315) 455-2000
Fax: (315) 455-9667
www.cscos.com

Thompson Rd (635) over I-690 - BIN 1064689



DESCRIPTION: PIER 1 – CAP BEAM – NORTH FACE – BETWEEN PEDESTALS 1 AND 2 – DELAMINATED AND CRACKING CONCRETE

PHOTO 29



DESCRIPTION: PIER 1 – CAP BEAM – NORTH FACE – BETWEEN PEDESTALS 2 AND 3 – DELAMINATED COCNRETE

PHOTO 30

ID Numbers in Photo's are for field use only.

C&S Engineers, Inc.
499 Col. Eileen Collins Blvd.
Syracuse, New York 13212
Phone: (315) 455-2000
Fax: (315) 455-9667
www.cscos.com

Thompson Rd (635) over I-690 - BIN 1064689



DESCRIPTION: PIER 1 – CAP BEAM – NORTH FACE – BELOW PEDESTAL 5 – SPALLING CONCRETE WITH EXPOSED REBAR

PHOTO 31



DESCRIPTION: PIER 1 – NORTH FACE – PEDESTAL 12 – SPALLING CONCRETE

PHOTO 32

ID Numbers in Photo's are for field use only.

C&S Engineers, Inc.
499 Col. Eileen Collins Blvd.
Syracuse, New York 13212
Phone: (315) 455-2000
Fax: (315) 455-9667
www.cscos.com

Thompson Rd (635) over I-690 - BIN 1064689



DESCRIPTION: PIER 1 – NORTH FACE – BEARING 9 – TYPICAL INNER BEARING

PHOTO 33



DESCRIPTION: PIER 2 – LOOKING NORTHEAST – PEDESTAL 1 – SPALLING CONCRETE – CAP BEAM – DELAMINATED CONCRETE

PHOTO 34

ID Numbers in Photo's are for field use only.

C&S Engineers, Inc.
499 Col. Eileen Collins Blvd.
Syracuse, New York 13212
Phone: (315) 455-2000
Fax: (315) 455-9667
www.cscos.com

Thompson Rd (635) over I-690 - BIN 1064689



DESCRIPTION: PIER 2 – BEARING 1 – RUST AND EFFLORESCENCE

PHOTO 35



DESCRIPTION: PIER 2 – SOUTH FACE – PEDESTAL 2 – DELAMINATED AND CRACKED CONCRETE

PHOTO 36

ID Numbers in Photo's are for field use only.

C&S Engineers, Inc.
499 Col. Eileen Collins Blvd.
Syracuse, New York 13212
Phone: (315) 455-2000
Fax: (315) 455-9667
www.cscos.com

Thompson Rd (635) over I-690 - BIN 1064689



DESCRIPTION: PIER 2 – SOUTH FACE – CAP BEAM AND COLUMN 1 – DELAMINATED CONCRETE

PHOTO 37



DESCRIPTION: PIER 2 – SOUTH FACE – CAP BEAM AND COLUMN 2 – DELAMINATED CONCRETE

PHOTO 38

ID Numbers in Photo's are for field use only.

C&S Engineers, Inc.
499 Col. Eileen Collins Blvd.
Syracuse, New York 13212
Phone: (315) 455-2000
Fax: (315) 455-9667
www.cscos.com

Thompson Rd (635) over I-690 - BIN 1064689



DESCRIPTION: PIER 2 – SOUTH FACE – PEDESTAL 7 – DELAMINATED AND CRACKED CONCRETE – BEARING – RUST

PHOTO 39



DESCRIPTION: PIER 2 – SOUTH FACE – PEDESTAL 9 – DELAMINATED CONCRETE – BEARING – INNER (TYPICAL)

PHOTO 40

ID Numbers in Photo's are for field use only.

C&S Engineers, Inc.
499 Col. Eileen Collins Blvd.
Syracuse, New York 13212
Phone: (315) 455-2000
Fax: (315) 455-9667
www.cscos.com

Thompson Rd (635) over I-690 - BIN 1064689



DESCRIPTION: PIER 2 – PEDESTAL 10 – WEST FACE – SPALLING CONCRETE

PHOTO 41



DESCRIPTION: PIER 2 – PEDESTAL 12 – EAST FACE – SPALLING CONCRETE AND EXPOSED BAR – BEARING - RUST

PHOTO 42

ID Numbers in Photo's are for field use only.

C&S Engineers, Inc.
499 Col. Eileen Collins Blvd.
Syracuse, New York 13212
Phone: (315) 455-2000
Fax: (315) 455-9667
www.cscos.com

Thompson Rd (635) over I-690 - BIN 1064689



DESCRIPTION: PIER 2 – CAP BEAM AND COLUMN 3 – SOUTH FACE – BETWEEN PEDESTALS 7 AND 9 – DELAMINATED CONCRETE

PHOTO 43



DESCRIPTION: PIER 2 – CAP BEAM AND COLUMN 4 – SOUTH FACE – BETWEEN PEDESTALS 10 AND 12– DELAMINATED CONCRETE

PHOTO 44

ID Numbers in Photo's are for field use only.

C&S Engineers, Inc.
499 Col. Eileen Collins Blvd.
Syracuse, New York 13212
Phone: (315) 455-2000
Fax: (315) 455-9667
www.cscos.com

Thompson Rd (635) over I-690 - BIN 1064689



DESCRIPTION: PIER 2 – NORTH AND BOTTOM FACE – BETWEEN COLUMNS 1 AND 2 – DELAMINATED AND CRACKED CONCRETE

PHOTO 45



DESCRIPTION: PIER 2 – NORTH FACE – COLUMN 2 – SPALLING CONCRETE

PHOTO 46

ID Numbers in Photo's are for field use only.

C&S Engineers, Inc.
499 Col. Eileen Collins Blvd.
Syracuse, New York 13212
Phone: (315) 455-2000
Fax: (315) 455-9667
www.cscos.com

Thompson Rd (635) over I-690 - BIN 1064689



DESCRIPTION: PIER 2 – NORTH FACE – CAP BEAM – BELOW PEDESTAL 7 – DELAMINATED AND CRACKED CONCRETE

PHOTO 47



DESCRIPTION: PIER 2 – NORTH FACE – CAP BEAM – BELOW PEDESTAL 11 – DELAMINATED CONCRETE

PHOTO 48

ID Numbers in Photo's are for field use only.

C&S Engineers, Inc.
499 Col. Eileen Collins Blvd.
Syracuse, New York 13212
Phone: (315) 455-2000
Fax: (315) 455-9667
www.cscos.com

Thompson Rd (635) over I-690 - BIN 1064689



DESCRIPTION: PIER 3 – SOUTH FACE – PEDESTAL 1 – SPALLING CONCRETE

PHOTO 49



DESCRIPTION: PIER 3 – PEDESTAL 1 – WEST FACE – SPALLING CONCRETE

PHOTO 50

ID Numbers in Photo's are for field use only.

C&S Engineers, Inc.
499 Col. Eileen Collins Blvd.
Syracuse, New York 13212
Phone: (315) 455-2000
Fax: (315) 455-9667
www.cscos.com

Thompson Rd (635) over I-690 - BIN 1064689



DESCRIPTION: PIER 3 – SOUTH FACE – COLUMN 2 AT CAP BEAM – DELAMINATED CONCRETE

PHOTO 51



DESCRIPTION: PIER 3 – PEDESTAL 7 – EAST FACE – DELAMINATED AND SPALLING CONCRETE

PHOTO 52

ID Numbers in Photo's are for field use only.

C&S Engineers, Inc.
499 Col. Eileen Collins Blvd.
Syracuse, New York 13212
Phone: (315) 455-2000
Fax: (315) 455-9667
www.cscos.com

Thompson Rd (635) over I-690 - BIN 1064689



DESCRIPTION: PIER 3 – COLUMN 3 AT CAP BEAM – DELAMINATED AND SPALLING CONCRETE

PHOTO 53



DESCRIPTION: PIER 3 – CAP BEAM – SOUTH FACE – BELOW PEDESTAL 9 – DELAMINATED CONCRETE

PHOTO 54

ID Numbers in Photo's are for field use only.

C&S Engineers, Inc.
499 Col. Eileen Collins Blvd.
Syracuse, New York 13212
Phone: (315) 455-2000
Fax: (315) 455-9667
www.cscos.com

Thompson Rd (635) over I-690 - BIN 1064689



DESCRIPTION: PIER 3 – SOUTH AND EAST FACES – PEDESTAL 12 AND CAP BEAM – DELAMINATED AND CRACKED CONCRETE

PHOTO 55



DESCRIPTION: PIER 3 – BOTTOM FACE AT EAST END – DELAMINATED CONCRETE

PHOTO 56

ID Numbers in Photo's are for field use only.

C&S Engineers, Inc.
499 Col. Eileen Collins Blvd.
Syracuse, New York 13212
Phone: (315) 455-2000
Fax: (315) 455-9667
www.cscos.com

Thompson Rd (635) over I-690 - BIN 1064689



DESCRIPTION: PIER 3 – COLUMN 1 – FACING SOUTHWEST – DELAMINATED AND CRACKED CONCRETE

PHOTO 57



DESCRIPTION: PIER 3 – NORTH AND EAST FACES – COLUMN 2 AT CAP BEAM – DELAMINATED AND SPALLING CONCRETE

PHOTO 58

ID Numbers in Photo's are for field use only.

C&S Engineers, Inc.
499 Col. Eileen Collins Blvd.
Syracuse, New York 13212
Phone: (315) 455-2000
Fax: (315) 455-9667
www.cscos.com

Thompson Rd (635) over I-690 - BIN 1064689



DESCRIPTION: NORTH ABUTMENT – BACKWALL – BEHIND PEDESTAL 1 – SPALLING CONCRETE WITH EXPOSED REBAR

PHOTO 59



DESCRIPTION: NORTH ABUTMENT – BACKWALL – NEAR PEDESTAL 2 – DELAMINATED CONCRETE

PHOTO 60

ID Numbers in Photo's are for field use only.

C&S Engineers, Inc.
499 Col. Eileen Collins Blvd.
Syracuse, New York 13212
Phone: (315) 455-2000
Fax: (315) 455-9667
www.cscos.com

Thompson Rd (635) over I-690 - BIN 1064689



DESCRIPTION: NORTH ABUTMENT – BACKWALL – BEHIND PEDESTAL 4 – DELAMINATED CONCRETE

PHOTO 61



DESCRIPTION: NORTH ABUTMENT – BACKWALL – BETWEEN PEDESTALS 6 AND 7 - JOINT

PHOTO 62

ID Numbers in Photo's are for field use only.

C&S Engineers, Inc.
499 Col. Eileen Collins Blvd.
Syracuse, New York 13212
Phone: (315) 455-2000
Fax: (315) 455-9667
www.cscos.com

Thompson Rd (635) over I-690 - BIN 1064689



DESCRIPTION: NORTH ABUTMENT – PEDESTAL 6 – TYPICAL CONCRETE – BEARING – RUST PACKED

(SIMILAIR TO BEARING 7)

PHOTO 63



DESCRIPTION: NORTH ABUTMENT – BEARING 12 – RUST (TYPICAL OUTER BEARINGS)

PHOTO 64

ID Numbers in Photo's are for field use only.

C&S Engineers, Inc.
499 Col. Eileen Collins Blvd.
Syracuse, New York 13212
Phone: (315) 455-2000
Fax: (315) 455-9667
www.cscos.com

Thompson Rd (635) over I-690 - BIN 1064689



DESCRIPTION: NORTH ABUTMENT – BACKWALL – BEHIND PEDESTAL 12 – SPALLING CONCRETE

PHOTO 65



DESCRIPTION: NORTH ABUTMENT – BACKWALL – BEHIND PEDESTAL 12 – SPALLING CONCRETE

PHOTO 66

ID Numbers in Photo's are for field use only.

C&S Engineers, Inc.
499 Col. Eileen Collins Blvd.
Syracuse, New York 13212
Phone: (315) 455-2000
Fax: (315) 455-9667
www.cscos.com

Thompson Rd (635) over I-690 - BIN 1064689



DESCRIPTION: NORTH ABUTMENT – STEM – BELOW PESESTALS 9 TO 12 – DELAMINATED CONCRETE

PHOTO 67



DESCRIPTION: SOUTHBOUND THOMSPON ROAD BEAM AND SIGNAGE – LOOKING NORTHEAST – MINOR RUST AND PAINT LOSS – TYPICAL AT EXTERIOR BEAMS

PHOTO 68

ID Numbers in Photo's are for field use only.

C&S Engineers, Inc.
499 Col. Eileen Collins Blvd.
Syracuse, New York 13212
Phone: (315) 455-2000
Fax: (315) 455-9667
www.cscos.com

Thompson Rd (635) over I-690 - BIN 1064689



DESCRIPTION: SPAN 1 – BRIDGING BETWEEN BEAMS 2 AND 3 – LOOKING NORTH – MINOR RUST AT WELDS – LESS THAN 5% SECTION LOSS (TYPICAL)

PHOTO 69



DESCRIPTION: JOINT OVER PIER 3 BETWEEN BEAMS 6 AND 7 – SPALLED CONCRETE, RUST STAINING, WATER PENETRATING JOINT (TYPICAL)

PHOTO 70

ID Numbers in Photo's are for field use only.

C&S Engineers, Inc.
499 Col. Eileen Collins Blvd.
Syracuse, New York 13212
Phone: (315) 455-2000
Fax: (315) 455-9667
www.cscos.com

Thompson Rd (635) over I-690 - BIN 1064689



DESCRIPTION: ABOVE PIER 2 PEDESTAL 10 – DECK PAN RUST AT EDGES (TYPICAL)

PHOTO 71



DESCRIPTION: SPAN 2 – AT PIER 2 FACING PIER 3 – BAY 1 - TYPICAL

PHOTO 72

ID Numbers in Photo's are for field use only.

C&S Engineers, Inc.
499 Col. Eileen Collins Blvd.
Syracuse, New York 13212
Phone: (315) 455-2000
Fax: (315) 455-9667
www.cscos.com

Thompson Rd (635) over I-690 - BIN 1064689



DESCRIPTION: SOUTH ABUTMENT – FACING WEST

PHOTO 73



DESCRIPTION: PIER 1 - FACING NORTHEAST

PHOTO 74

ID Numbers in Photo's are for field use only.

C&S Engineers, Inc.
499 Col. Eileen Collins Blvd.
Syracuse, New York 13212
Phone: (315) 455-2000
Fax: (315) 455-9667
www.cscos.com

Thompson Rd (635) over I-690 - BIN 1064689



DESCRIPTION: PIER 2 – FACING NORTH WEST

PHOTO 75



DESCRIPTION: PIER 3 – FACING SOUTHEAST

PHOTO 76

ID Numbers in Photo's are for field use only.

C&S Engineers, Inc.
499 Col. Eileen Collins Blvd.
Syracuse, New York 13212
Phone: (315) 455-2000
Fax: (315) 455-9667
www.cscos.com

Thompson Rd (635) over I-690 - BIN 1064689



DESCRIPTION: NORTH ABUTMENT – FACING NORTHEAST

PHOTO 77



DESCRIPTION: NORTHWEST WINGWALL – FACING NORTHEAST

PHOTO 78

ID Numbers in Photo's are for field use only.

C&S Engineers, Inc.
499 Col. Eileen Collins Blvd.
Syracuse, New York 13212
Phone: (315) 455-2000
Fax: (315) 455-9667
www.cscos.com

Thompson Rd (635) over I-690 - BIN 1064689



DESCRIPTION: NORTHEAST WINGWALL – FACING WEST

PHOTO 79



DESCRIPTION: BRIDGE DECK – SOUTHBOUND DIRECTION – NORTH ABUTMENT FACING SOUTH

PHOTO 80

ID Numbers in Photo's are for field use only.

C&S Engineers, Inc.
499 Col. Eileen Collins Blvd.
Syracuse, New York 13212
Phone: (315) 455-2000
Fax: (315) 455-9667
www.cscos.com

Thompson Rd (635) over I-690 - BIN 1064689



DESCRIPTION: BRIDGE DECK – NORTHBOUND – SOUTH ABUTMENT FACING NORTH

PHOTO 81



DESCRIPTION: BRIDGE ELEVATION – FACING WEST

PHOTO 82

ID Numbers in Photo's are for field use only.

PHOTO LOG MAP

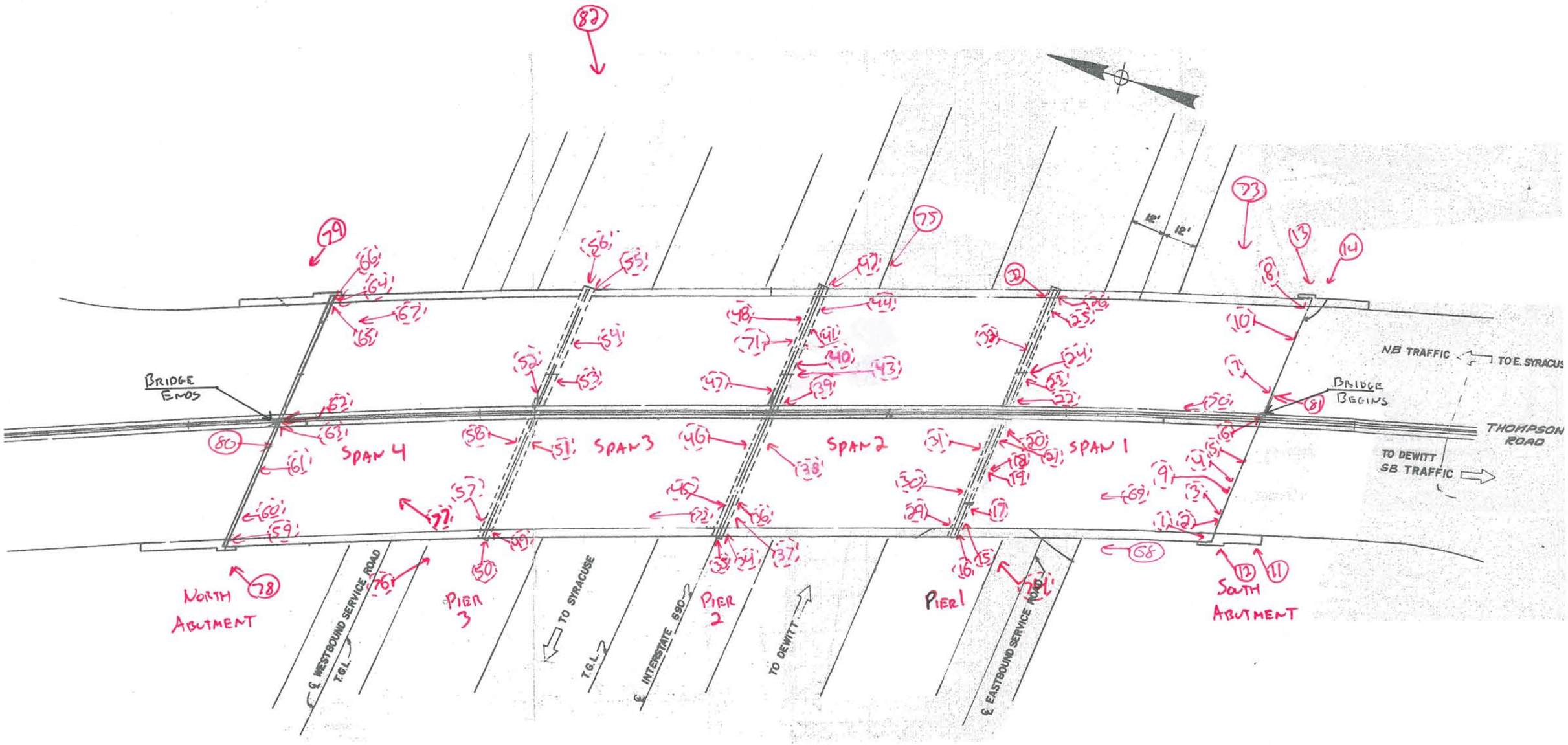

BIN 1064689
THOMPSON ROAD OVER
I-690

ASBESTOS DOCUMENTATION

ASBESTOS DOCUMENTATION FROM WATTS ARCHITECTURE & ENGINEERING, INC.

(WILL REPLACE BIN FOLDER ASBESTOS REPORT UPON COMPLETION)

BIN 1064689
THOMPSON ROAD
OVER ROUTE I-690

BRIDGE PAINT ASBESTOS TESTING
BULK SAMPLE SUMMARY TABLE

NO OTHER SUSPECT MATERIALS TESTED

SAMPLE #	SAMPLE DATE	HOMOGENEOUS AREA	SAMPLE LOCATION	RESULTS- % ASBESTOS *	ANALYSIS METHOD
1064689-1	7/19/02	Green/Orange/Red Paint	North End of Bridge on Outside of West Fascia Girder	None Detected	TEM **
1064689-2	7/19/02	Green/Orange/Red Paint	North End of Bridge on Inside of East Fascia Girder	None Detected	TEM **
1064689-3	7/19/02	Green/Orange/Red Paint	South End of Bridge on Inside of West Fascia Girder	None Detected	TEM **

* PLM = Polarized Light Microscopy
** TEM = Transmission Electron Microscopy

LaBella Project No. 201001
PIN 3804.79.101
1064689

NEW YORK STATE
DEPARTMENT OF TRANSPORTATION
D031085 P.I.N 3501.60

LEVEL 1 LOAD RATING
B.I.N. 1064689
Thompson Road over I-690

LOAD RATING SUMMARY TABLE (LOAD FACTOR)					
CONTROLLING MEMBER	**CONTROLLING PARAMETER**	**LIVE LOAD**	**LIVE LOAD TYPE**	**INVENTORY RATING**	**OPERATING RATING**
NORTHBOUND SPAN 2 INTERIOR GIRDER (G5)	SERVICE	HS20-44	Axle Load	HS 27.3 (49.2 TONS)	HS 45.7 (82.2 TONS)

DOES NOT INCLUDE FUTURE WEARING COURSE

ANALYSIS METHOD:LOAD FACTOR

RECOMMENDED POSTING AS-IS CONDITION: _____ Tons __X__ None

CALCULATED BY:



DATE: 06/16/14

QUALITY ASSURANCE BY:



DATE: 06/16/14

C&S COMPANIES®

499 Col. Eileen Collins Blvd.
Syracuse, NY 13212
phone 315-455-2000
fax 315-455-9667
www.cscos.com

ENGINEERS
DESIGN BUILD
TECHNICAL RESOURCES
OPERATIONS

C&S Companies

C&S Engineers, Inc.
Syracuse Hancock International Airport
Syracuse, NY 13212
phone 315-455-2000
fax 315-455-9667
www.cscos.com

TECHNICAL MEMORANDUM

TO: FILE (190.514.001)

FROM: JESSICA S. BAUER, P.E.
NYSPE 084915

DATE: MARCH 17, 2014

C&S PROJECT NO.: 190.514.001

RE: SEISMIC ASSESSMENT SUMMARY
NEW YORK STATE DEPARTMENT OF TRANSPORTATION
D031085; PIN 3501.60; I-81

BIN: 1064689 Seismic Assessment

This memorandum summarizes the seismic assessment conducted for BIN 1064689 as part of the Interstate 81 Project in Syracuse, NY. The purpose of the assessment is to determine if seismic retrofits are warranted at the superstructure to substructure connection, and if further seismic evaluation of the structure is required. This memorandum will give the assessment results, retrofits required and recommendations for further seismic evaluation of the structure.

ASSESSMENT PROCEDURE

The seismic assessment was performed in accordance with the FHWA Seismic Retrofitting Manual for Highway Structures: Part 1 - Bridges, January 2006. As per the referenced manual, seismic assessment was performed for both lower level and upper level earthquake ground motion. The lower level earthquake ground motion has a reasonable likelihood of occurrence within the life of the bridge (50% probability of exceedance within a 75 year bridge life). The upper level earthquake ground motion has a finite likelihood of occurrence within the life of the bridge (7% probability of exceedance within a 75 year bridge life).

Values for the spectral acceleration for the Syracuse area used in the assessment are as follows:

- Lower Level Earthquake Ground Motion for a Short Period (0.2 seconds): $S_S = 0.0251$
- Lower Level Earthquake Ground Motion for a Long Period (1.0 seconds): $S_1 = 0.0076$
- Upper Level Earthquake Ground Motion for a Short Period (0.2 seconds): $S_S = 0.139$
- Upper Level Earthquake Ground Motion for a Long Period (1.0 seconds): $S_1 = 0.047$

These values are considered constant and are the same for all seismic assessments of bridges in the Syracuse area.

The Site Class is based on the soil conditions at the bridge location. It was determined that this parameter has little effect on the results of the seismic assessment because the spectral

You created this PDF from an application that is not licensed to print to novaPDF printer (http://www.novapdf.com)

acceleration values for the Syracuse area are small. Based on this, a site class of D was used for all seismic assessments of bridges in the Syracuse area.

Bridge parameters used in the seismic assessment were retrieved from the record drawings and WinBolts data.

The seismic assessment takes into account the anticipated service life, importance, and the seismic exposure of the bridge to determine a seismic retrofit category (SRC). The SRC is then used to determine seismic evaluation methods and retrofit measures. There are four SRCs, A through D. Seismic retrofit category A is the lowest category; bridges in this category do not require retrofits or further seismic evaluation. Seismic retrofit category D is the highest category; bridges in this category requiring the most rigorous seismic evaluations and retrofits.

ASSESSMENT RESULTS

The SRC for the bridge is "**C**" for lower level earthquake ground motion and "**B**" for upper level earthquake ground motion.

RETROFITS REQUIRED

Bearing replacements and seat width improvements are not required at the abutments or piers. Additional retrofits may be required if further seismic evaluation is needed.

RECOMMENDATIONS FOR FURTHER SEISMIC EVALUATION

For the lower level earthquake ground motion, it is recommended that capacity/demand ratios for bridge components are calculated as per Section 5.4 of the referenced manual. For the upper level earthquake ground motion, it is recommended that the capacities of the bearings are checked as per Section 5.2 of the referenced manual.

Retrofit cost estimates will be provided after any further required seismic evaluations are completed.

You created this PDF from an application that is not licensed to print to novaPDF printer (http://www.novapdf.com)

ENGINEERS
DESIGN BUILD
TECHNICAL RESOURCES
OPERATIONS

C&S Engineers, Inc.
Syracuse Hancock International Airport
Syracuse, NY 13212
phone 315-455-2000
fax 315-455-9667
www.cscos.com

TECHNICAL MEMORANDUM

TO: **FILE (190.514.001)**

FROM: **JESSICA S. BAUER, P.E.**
NYSPE 084915

DATE: **JUNE 16, 2014**

C&S PROJECT NO.: 190.514.001

RE: **NEW YORK STATE DEPARTMENT OF TRANSPORTATION**
D031085; PIN 3501.60; I-81 Opportunities, BIN 1064689 Fatigue Evaluation

---

This memorandum documents a fatigue evaluation conducted for the existing Interstate 81 Viaduct Project. Existing structures with AASHTO Category D, E, and E' fatigue-prone details require 100% hands-on inspection unless proven to be exempt. The purpose of the evaluation is to assess the remaining life of fatigue-prone components.

EVALUATION PROCEDURES

The fatigue evaluation was performed in accordance with the AASHTO Guide Specification for Fatigue Evaluations of Existing Steel Bridges, 1990. Fatigue-prone welds identified in the biennial inspection reports were located on record drawings and confirmed visually in the field. Additional information concerning fatigue-prone welds located in BIN folders was also obtained and reviewed prior to inspection.

EVALUATION RESULTS

The fatigue-prone detail is plate girders with thin webs (< 0.4") and staggered diaphragms. Cracks can form in the web adjacent to the connection plate snipe due to out of plane bending. This detail was made a special emphasis detail during inspection requiring 100% hands-on inspection by NYSDOT inspection technical advisory INSP 02-001, dated August 28, 2008.

During the in-depth inspection a 100% hands-on inspection of the fatigue-prone detail was performed and no issues were found, see attached Structural Steel Inspection Summary from the In-Depth Inspection Report.

The detail is considered an AASHTO Category B fatigue-prone detail, therefore no fatigue evaluation was performed on this detail.

E. Recommendations:

The purpose of this deck evaluation is to document and determine existing conditions of the deck. It will be used as a tool for developing the scope of work and cost estimates for the development and comparison of alternatives for the overall project.

The total damaged area is approximately 10% in the northbound direction and 22% in the southbound direction of the total deck area. Due to the age, condition and the overall high chloride-ion content of the bridge deck concrete, the bridge deck should be rehabilitated or replaced to meet current standards and to mitigate excessive future maintenance costs.

Option 1 – Scarify and Bridge Deck Overlay
The maximum service life of this option would provide is 25 years. The design life of this project is 30 years (ETC +30). This option does not meet the project objective of obtaining 30+ years of service life.

Option 2 – Bridge Deck Rehabilitation with 100% Deep Removal
This option will involve partial depth reconstruction with top mat rebar exposure of the entire bridge deck to remove chloride contaminated concrete (100% deep removal). The existing bridge deck thickness is 7 ½" with 1 ½" cover over the top mat of reinforcing. The proposed partial depth reconstruction will include the addition of 2" of concrete to provide the standard 9 ½" bridge deck thickness. The existing top mat of reinforcing bars will be removed and replaced to accommodate the standard 3" of concrete cover. The existing 2-rail bridge railing and curbing will be removed and replaced with single-slope concrete bridge barrier. The existing armor bridge joints will be removed and replaced with armorless bridge joints. The Level 1 Load Rating for the final condition was found to be acceptable. This option would provide a service life of 35 years to the bridge deck. The construction cost of this option is $ 2.67 million.

Option 3 – Bridge Deck Replacement with Cast-In-Place Concrete

This option would involve the complete demolition of the existing bridge deck, 2-rail bridge railing and curb, and armor bridge joints. The bridge deck would be replaced with a new concrete deck, new single slope concrete median barrier, and new armorless bridge joints. The new bridge deck would be 9 ½" standard thickness as compared to the existing thickness of 7 ½". The Level 1 Load Rating for the final condition was found to be acceptable. This option would provide a service life of 40 years to the bridge deck. The construction cost of this option is $3.22 million.

Option 4 – Bridge Deck Replacement with Pre-cast Concrete Deck Panels

This option will have the highest construction cost of all of the options however; traffic control costs may be lower due to reduced construction time. Comparison of accelerated construction to conventional construction is beyond the scope of work for this project at this time.

IN DEPTH INSPECTION REPORT

D031085 P.I.N. 3501.60

B.I.N. 1064691

TEAM LEADER Bruce Opalka, P.E. 60413
NYSPE LICENSE #

ASSISTANT TEAM LEADER Mike Rode

ASSISTANT TEAM LEADER Chuck Brooks

FEATURE CARRIED I-690 WB

FEATURE CROSSED Bridge Street

DATE FIELD WORK BEGAN January 23, 2014

DATE FIELD WORK COMPLETED January 24, 2014

TABLE OF CONTENTS

- TP 349 & 350
- IN-DEPTH CONDITION DOCUMENTATION
- IN-DEPTH PHOTO DOCUMENTATION
- ASBESTOS REPORT

TP 349 & TP 350

BRIDGE ELEMENT RATINGS

Inspection Date: 10/17/2013 RC: 33 BIN: 1064691

Bridge Ratings

Carried: 690I 690I33013008 Crossed: BRIDGE STREET CheckValue: 1,816,023,060

Inspection Agency: 13 - Consultant Type of Inspection: 1 - BIENNIAL
GTMS: 302 -- Steel - Stringer/Multi-Beam or Girder
POSTINGS: See Gen Rec Page 1 for Postings at time of inspection.
Further Investigation Needed: No
State Highway Number: 68-4 Milepoint: 13.2 AADT/Yr: 25050 / 2003
Orientation: 3 - East Political Unit: 0233 - Town of DEWITT Year Built: 1971
Total Spans: 2 Ramp Bridge Attached To Span: NA BIN: NA
General Recommendation: 5 Computed Condition Rating: 4.625

Abutment Ratings:	**Beg Abut**	**End Abut**
Joint with Deck	8	4
Bearings, Bolts, Pads	4	4
Seats and Pedestals	4	5
Backwall	5	5
Stem (Breastwall)	8	8
Erosion or Scour	5	5
Footings	9	9
Piles	9	9
Recommendation	5	5

Wingwall Ratings:	**Beg Abut**	**End Abut**
Walls	5	5
Footings	9	9
Erosion or Scour	6	6
Piles	9	9

Channel Ratings:	**Channel**
Stream Alignment	8
Erosion and Scour	8
Waterway Opening	8
Bank Protection	8

Approach Ratings:	**Approaches**
Drainage	5
Embankment	6
Settlement	7
Erosion	6
Pavement	6
Guide Railing	6

Number of Flags Issued:

RED: 0 Yellow: 0 Safety: 0

Vulnerability Reviews Recommended: 1=Yes, 2=No, 3=NA, X=NotActive

Hydraulic: 3	Overload: X	Steel: 2
Collision: 2	Concrete: X	Seismic: X

Inspector's Signature: CheckValue: 1,816,023,060 Date: 10/17/2013

James W. Gorzynski,PE () (Inspector ID:3100044)

Signed copy of this inspection report is available in the appropriate NYSDOT Regional Office

Reviewed By: Date: 12/23/2013

Stephen L. Gauthier,PE () (QC ID:3100077)

Signed copy of this inspection report is available in the appropriate NYSDOT Regional Office

Inspection Date: 10/17/2013 RC: 33 BIN: 1064691

Span Ratings

Carried: 690I 690I33013008 Crossed: BRIDGE STREET CheckValue: 1,816,023,060

Deck Element Ratings:	001	002
Wearing Surface	4	4
Curbs	6	6
Sidewalks, Fascias	3	3
Railings, Parapets	5	5
Scuppers	8	8
Gratings	8	8
Median	8	8
Mono Deck Surface	4	4

Superstructure Ratings:	001	002
Structural Deck	5	5
Primary Members	5	5
Secondary Members	6	6
Paint	4	4
Joints	4	8
Recommendation	5	5

Pier Ratings:	001	002
Bearings, Bolts, Pads	4	8
Pedestals	3	8
Top of Cap or Beam	5	8
Stem Solid Pier	8	8
Cap Beam	5	8
Pier Columns	5	8
Footings	9	8
Erosion or Scour	6	8
Piles	9	8
Recommendation	5	8

Utility Ratings:	001	002
Lighting	8	8
Sign Structure	8	8
Utilities and Support	8	8

Field Notes:

Field Date	Arrival	Departure	Temp (C)	Temp (F)	Weather Conditions
10/17/2013	7:30:00 AM	3:50:00 PM	16	60	Fair

IN-DEPTH CONDITION DOCUMENTATION

IN DEPTH INSPECTION REPORT

BIN 1064691

Visual Inspection

Rehabilitation plans show a complete deck scarification with concrete overlay and joint replacement under contract D95879 (no date on plans but were signed 5/78). Contract D256745 (7/95) installed new armored joint system with compression seals, however, the West (Begin) Abutment received a poured construction joint instead, per hand written notes on the record plans and verified by our the field investigation. There are fixed bearings at the West Abutment.

Cracks, spalls, and other field observations are shown on the plans. Below is a brief summary of conditions for each feature.

Superstructure

Deck – See Bridge Deck Evaluation Report.

Steel – See Structural Steel Inspection Summary.

Bearings – Bearings are original. The expansion type slide over a bronze plate. Bearings (fixed) on the beginning abutment have some paint loss with associated rusting, fascias in worst condition. Pier bearings have heavy build up of paint chips and pack rust debris with some delamination of the steel. Expansion bearings appear frozen in place. Fascia bearings (expansion) on the end abutment have some paint loss with associated rusting. Interior bearings appear in satisfactory condition.

Substructure

West Abutment (Begin) – Beginning left cheek wall has a spall in the top front corner of 6” height (H) by 12” width (W) by 4” depth (D) with horizontal cracking across front face also at the pedestal height. The backwall has map cracking with efflorescence bleeding above pedestal 1 and over to pedestal 2. The backwall also has light hollowness above pedestal 5, 18” W by 18” H, and between pedestals 9 & 10, 12” W by 12” H. Pedestal 1 has vertical map cracking on right side (facing) of front face. Pedestals 3-5 have short horizontal cracks

near the top of the front face (facing) bleeding rust stains. The right fascia pedestal 10 has a 24” W by 12” H by 6” D area which is spalling and cracking which wraps around the corner and extends into the right face (left-facing) for 6”.

Pier - Column 1 has some delamination in beginning top left corner that wraps around to the left (north) face 3.5’ H by 0.5’ W on either face. Column 2 is in good condition. The left capbeam over columns 1 & 2 is basically sound with one 1’ W by 1’ H delamination on the beginning face below pedestal 2 and one 2’ W by 2’ H delamination on the end face below pedestal 5. Pedestal 1 is completely spalled and cracked on all four faces to 4” deep with some (+/-5%) loss of bearing area for the span 2 bearing. Pedestal 2 is cracked and spalled for the left ¾ of the begin face with hollowness on the left face. Pedestal 3 is in good condition. Pedestal 4 has some light hollowness on the right side of the beginning face. Pedestal 5 is in good condition.
Column 3 has some delamination in begin top right corner that wraps around to the right (south) face 4.0’ H by 1.0’ W on either face. Column 4 has some delamination in beginning top left corner that wraps around to the left (north) face 1.5’ H by 1.0’ W on either face. The right face (south) is spalled to 2” deep or delaminated for the bottom 5’; full width. Additionally, there is a hairline vertical crack from the spalled area to the top of the column 6” from the end face. The right capbeam over columns 3 & 4 has longitudinal cracking between the two columns 6” from the bottom edge on the begin, bottom and end faces. Also 6” from the top (begin) between peds 7 & 8. The concrete around the cracks is heavily delaminated with some spalls. All pedestals have some deterioration. #6 & #7 have map cracking on the begin faces. #8, #9, & #10 have horizontal cracking with associated delamination on the begin, left and end faces; begin, left, and right faces; all four faces, respectively.

East Abutment (End) – The end left cheek wall has light hollowness on the left fascia face in top front corner, 4’ H by 1’ W. There is concentrated map cracking with efflorescence bleeding in backwall behind pedestal 1. Backwall also has

rust stains to the right of pedestals 2 & 3 and behind pedestal 10. A localized spall was found in backwall above pedestal 10, 12” W by 3” D by full height, with horizontal cracking projecting into the right retaining wall from the top of the pedestal. Pedestal 10 has a hairline crack with rust staining in the top left front corner.

STRUCTURAL STEEL INSPECTION SUMMARY

BIN 1064691

Special Emphasis Inspection Required

Non-Redundant/Fracture Critical Members – No

Pin and Hangers – No

Fatigue-Prone Welds – Yes

Non-Categorized Fatigue-Prone Details – No

Other (Specified in Text) – No

Special Emphasis Details

Fatigue prone partial length cover plate weld ends on all girders on both spans appear in satisfactory condition. 100% hands-on inspection performed of fatigue-prone welds; no cracks were found.

Overall Steel Condition

Girders and cross members are in satisfactory condition with the exception of section loss to steel below the pier joint as detailed below.

Paint

Paint is peeling and blistering on all lower flanges of girders with areas over traffic and fascia girders in worst condition. This condition occurs in spot locations on other parts of the girders. Concentrated paint loss below the pier joint has allowed section loss to occur.

Section Loss

Heavy seepage through the pier joint has led to nominal losses (<5%) in the steel directly below, however, slightly more section loss has occurred in the left (north) fascia girders of both spans at the pier to +/-10% for full height of their webs for a width of 3” at the very ends of the girders. A field measurement of 5.5” from the end of the girder to the centerline of the bearing shows all loss behind the bearings. Due to the age of the steel a blanket 5% section loss should also be used in load rating.

BIN 1064691 Core locations WB Plan Sheet

1064691 I 690 WB OVER BRIDGE STREET

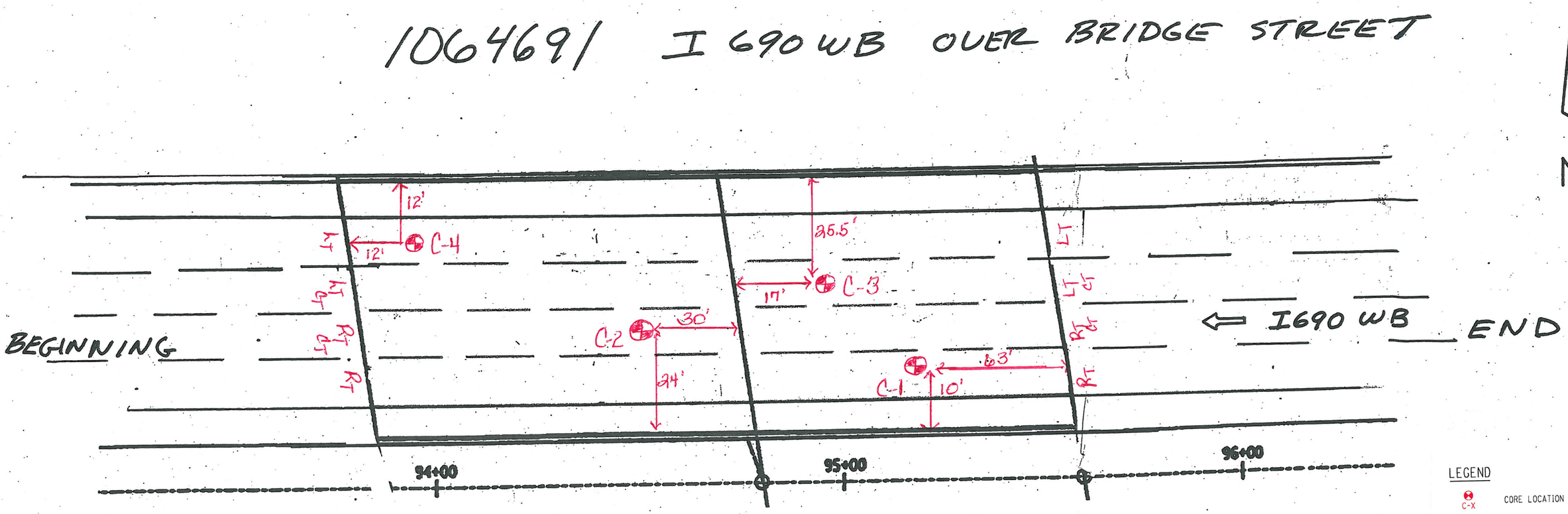

BIN 1064691
I-690 WB o/ Bridge St.

C-1 63'-10'
C-2 30'-24'
C-3 25.5'-17'
C-4 12'-12'

NTS

BIN 1064691 WB Plan Sheet

1064691 I 690 WB OVER BRIDGE STREET

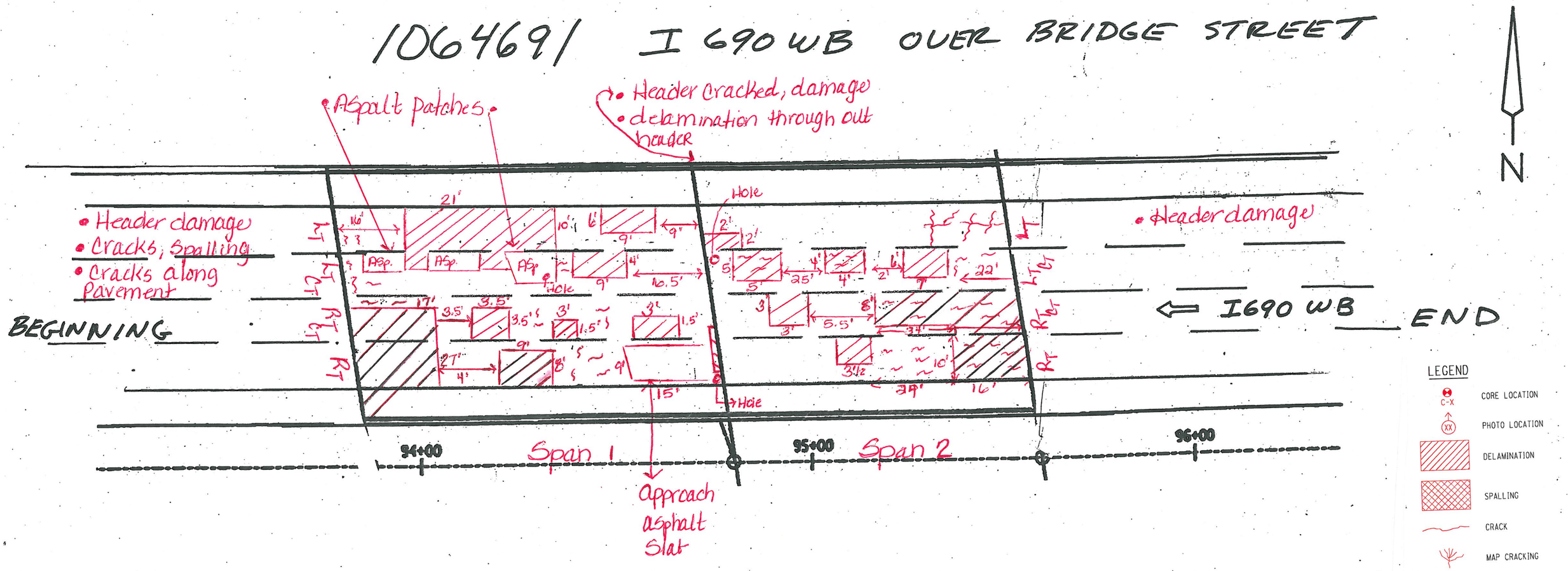

BIN 1064691
I-690 WB o/
Bridge St.

- Fascia Top good Condition
- Rail weather damage only

1064691 690 WB

E. SYR. LEFT

9/ WB

RUSTING OF S.I.P. FORMS

10% SECTION IN WEBS OF FASCIA GIRDERS - 3" WIDE BY FULL HEIGHT @ ENDS

E. SYR.

N

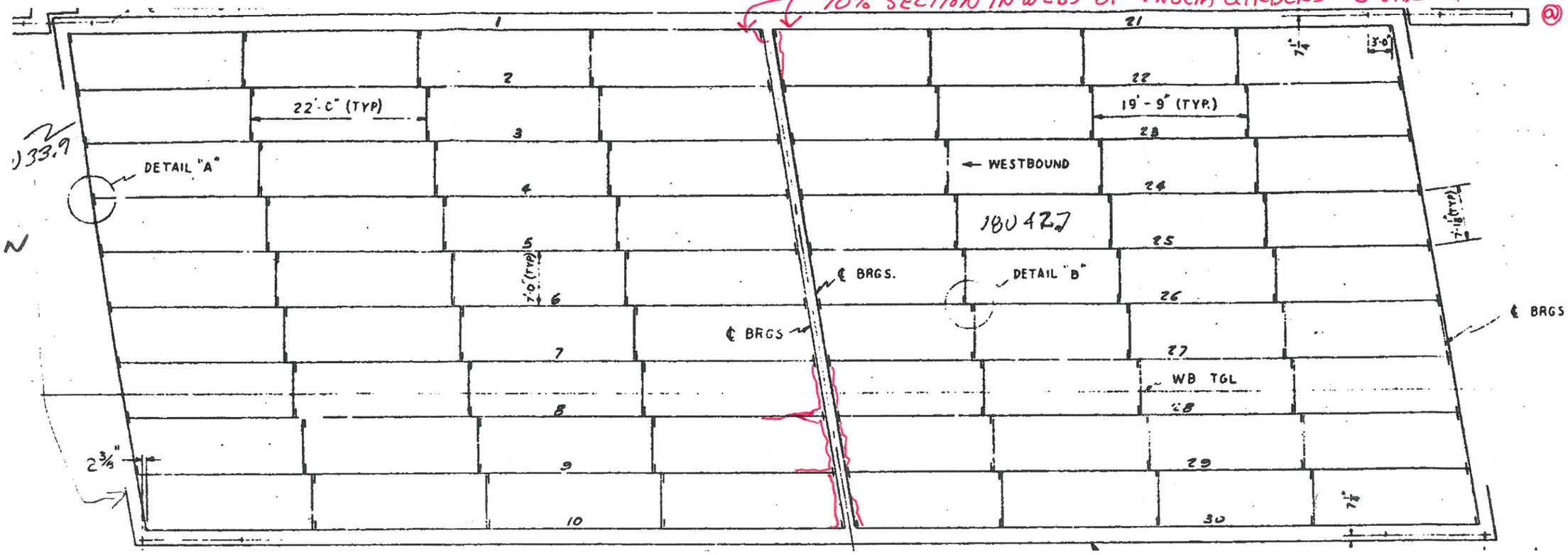

LEGEND

- C-X — CORE LOCATION
- XX — PHOTO LOCATION
- DELAMINATION
- SPALLING
- CRACK
- MAP CRACKING
- MOISTURE

I-690 WB over Bridge Street

In-Depth Field Notes

F.I.S.H. 68-4 F.I.S.H. 68-5 F.I.S.H. 6

FED. RD. DIST. NO.	STATE	FEDERAL AID PROJECT NO.	SHEET NO.	TOTAL SHEETS
	NEW YORK	I-281-8 (108) I-690-8 (83)	272	2

INTERSTATE ROUTE CONNECTION 570
HALEMON STREET TO BUTTERNUT INTERCHANGE

Pier Numbers in Pictures Do Not Line up to Numbers on Notes.

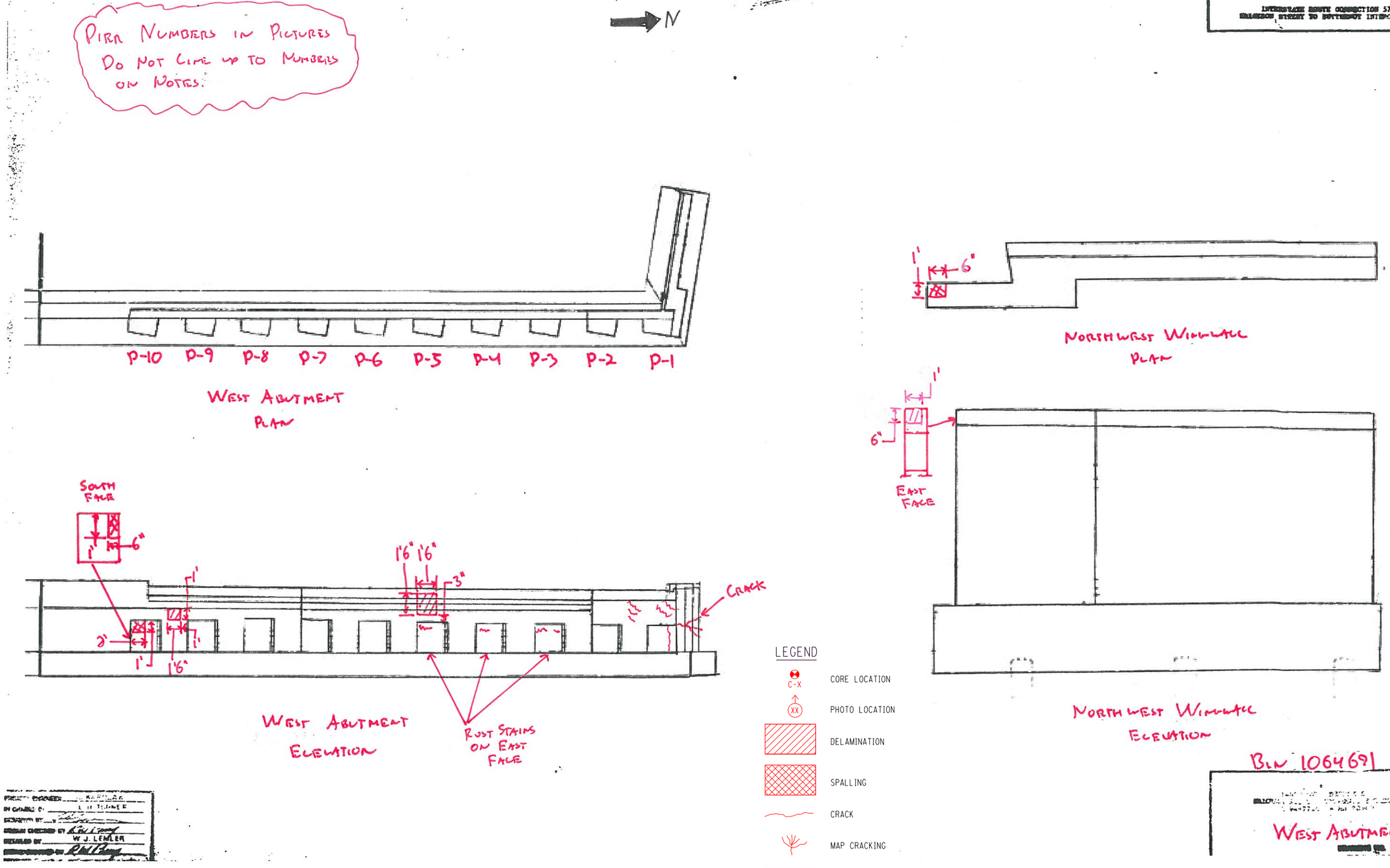

Bin 1064691

West Abutment

PROJECT ENGINEER
IN CHARGE BY L. H. TURNER
DESIGNED BY
DESIGN CHECKED BY
DETAILED BY W. J. LEMLER
DETAILED CHECKED BY

F.I.S.H. 68-4 F.I.S.H. 68-5 F.I.S.H.

FED. RD. REG. NO.	STATE	FEDERAL AID PROJECT NO.	SHEET NO.	TOTAL SHEETS
	NEW YORK	I-281-2 (103) I-690-3 (83)	275	29[illegible]

INTERSTATE ROUTE CONNECTION 570
ERICKSON STREET TO BUTTERNUT INTERCHANGE

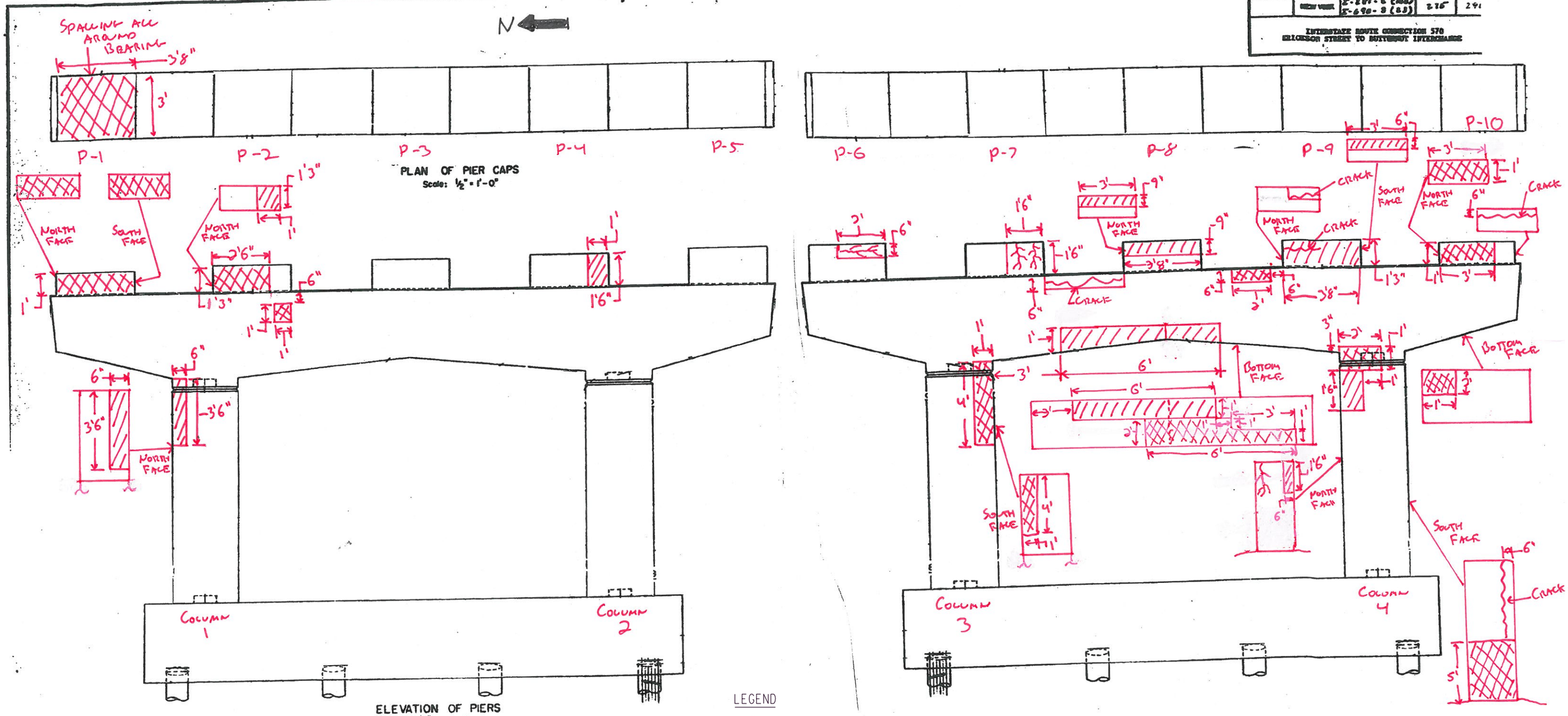

PLAN OF PIER CAPS
Scale: ½" = 1'-0"

ELEVATION OF PIERS
Scale: ½" = 1'-0"

LEGEND

- CORE LOCATION
- PHOTO LOCATION
- DELAMINATION
- SPALLING
- CRACK
- MAP CRACKING
- MOISTURE

COLUMN + PIER NUMBERS IN PICTURES DO NOT LINE UP TO NUMBERS ON NOTES

BIN 1064691

PIERS WEST FACE

DRAWING NO. 11 OF 18

F.I.S.H. 68-4 F.I.S.H. 68-5 F.I.S.H.

FED. RD. REG. NO.	STATE	FEDERAL AID PROJECT NO.	SHEET NO.	TOTAL SHEETS
	[illegible]	I-281-2 (108) I-690-3 (23)	275	29[illegible]

INTERSTATE ROUTE CONNECTION 570
KRICKSON STREET TO BUTTERNUT INTERCHANGE

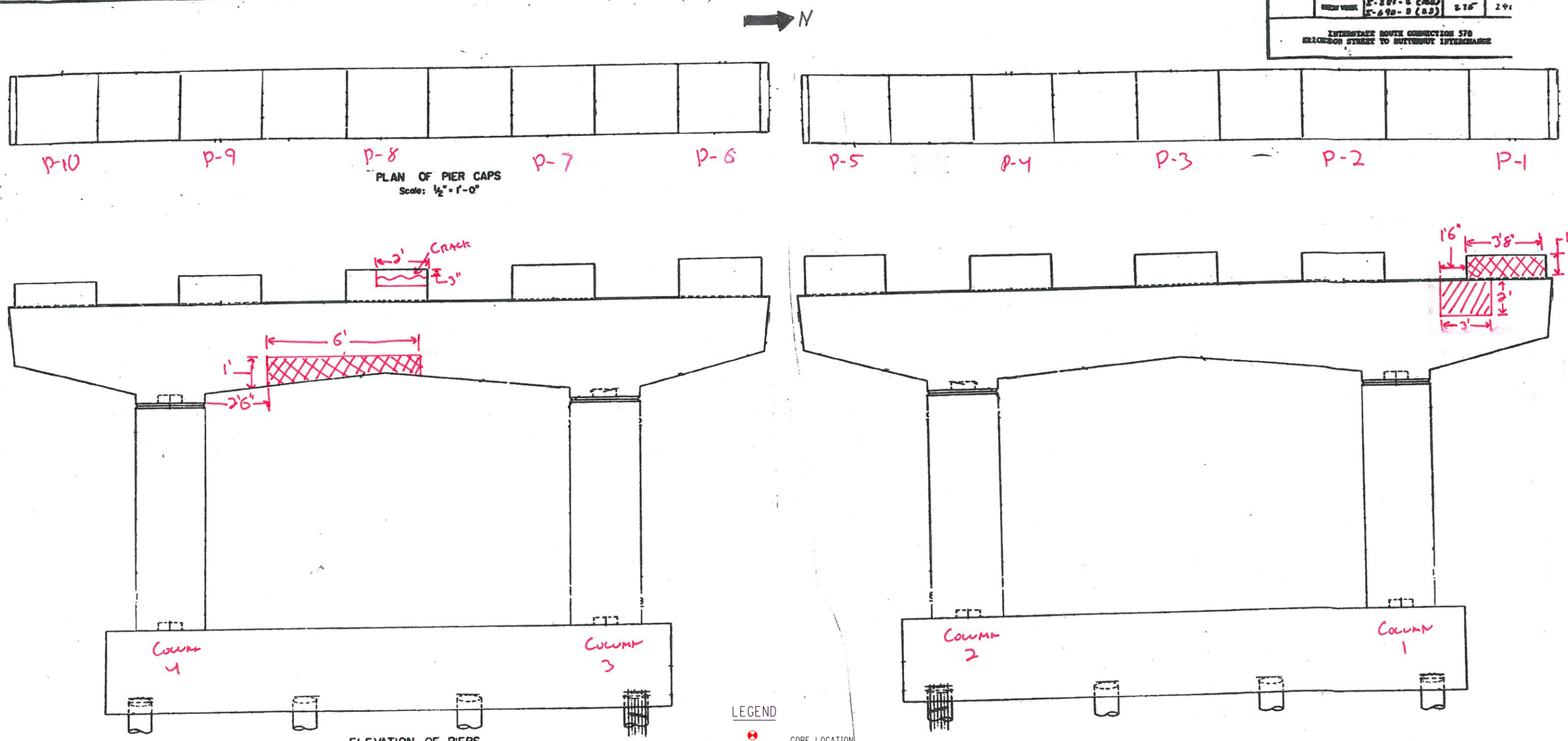

PLAN OF PIER CAPS
Scale: ½" = 1'-0"

ELEVATION OF PIERS
Scale: ½" = 1'-0"

LEGEND

- C-X CORE LOCATION
- XX PHOTO LOCATION
- DELAMINATION
- SPALLING
- CRACK
- MAP CRACKING
- MOISTURE

BIN 1064691

PIERS EAST FACE

DRAWING NO. 11 OF 18

F.I.S.H. 68-4 F.I.S.H. 68-5 F.I.S.H.

FED. AID. REG. NO.	STATE	FEDERAL AID PROJECT NO.	SHEET NO.	S
	NEW YORK	I-881-8 (108) I-690-3 (23)	269	270

INTERSTATE ROUTE CONNECTION 570
ERICKSON STREET TO BUTTERNUT INTERCHANGE

LEGEND

- C-X — CORE LOCATION
- XX — PHOTO LOCATION
- DELAMINATION
- SPALLING
- CRACK
- MAP CRACKING
- MOISTURE

N



NORTH EAST WINGWALL
PLAN

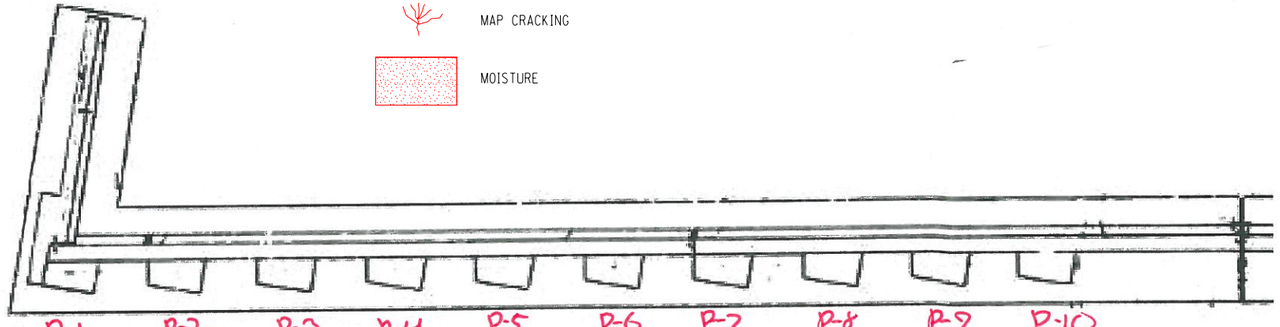

EAST ABUTMENT PLAN

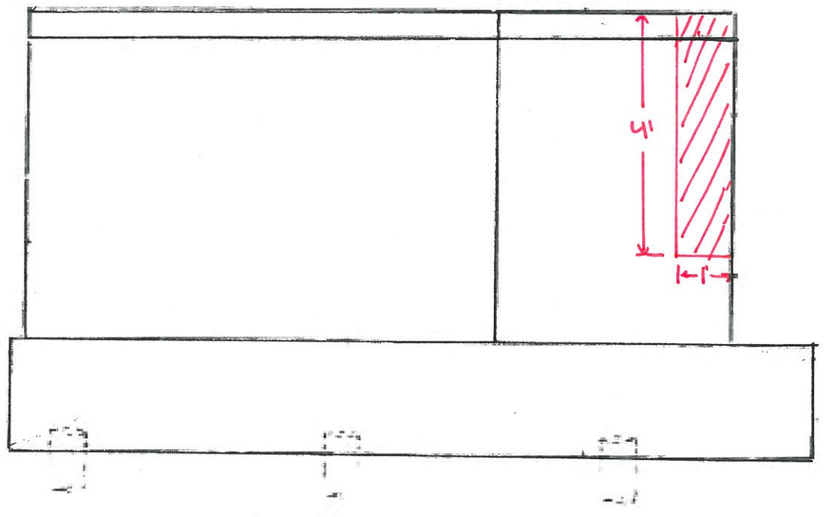

NORTH EAST WINGWALL
ELEVATION

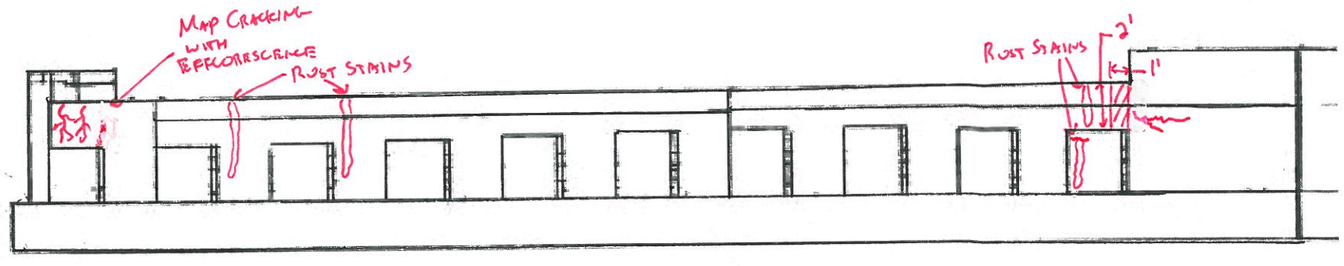

EAST ABUTMENT
ELEVATION

PROJECT ENGINEER
IN CHARGE OF
DESIGNED BY
DESIGN CHECKED BY
DETAILED BY W LEHLER
DETAIL CHECKED BY

BIN 1064691

EAST ABUTMENT

DRAWING NO. 5 OF 18

IN-DEPTH PHOTO DOCUMENTATION

C&S Engineers, Inc.
499 Col. Eileen Collins Blvd.
Syracuse, New York 13212
Phone: (315) 455-2000
Fax: (315) 455-9667
www.cscos.com

I-690 WB over Bridge Street - BIN 1064691



DESCRIPTION: GENERAL CONFIGURATION - LEFT ELEVATION

PHOTO 1



DESCRIPTION: WEST ABUTMENT (BEGIN) – GENERAL CONFIGURATION

PHOTO 2

C&S Engineers, Inc.
499 Col. Eileen Collins Blvd.
Syracuse, New York 13212
Phone: (315) 455-2000
Fax: (315) 455-9667
www.cscos.com

I-690 WB over Bridge Street - BIN 1064691



DESCRIPTION: BEGIN LEFT WINGWALL – GENERAL CONFIGURATION – SPALL IN TOP FRONT CORNER

PHOTO 3



DESCRIPTION: WEST ABUTMENT – PEDESTAL 1 – MAP CRACKING AND STAINING ON PEDESTAL

PHOTO 4

C&S Engineers, Inc.
499 Col. Eileen Collins Blvd.
Syracuse, New York 13212
Phone: (315) 455-2000
Fax: (315) 455-9667
www.cscos.com

I-690 WB over Bridge Street - BIN 1064691



DESCRIPTION: WEST ABUTMANT – PEDESTAL 2 – TYPICAL FIXED BEARING AT ABUTMENT

PHOTO 5



DESCRIPTION: WEST ABUTMANT - PEDESTAL 5 - HOLLOWNESS ABOVE THE PEDESTAL

PHOTO 6

C&S Engineers, Inc.
499 Col. Eileen Collins Blvd.
Syracuse, New York 13212
Phone: (315) 455-2000
Fax: (315) 455-9667
www.cscos.com

I-690 WB over Bridge Street - BIN 1064691



DESCRIPTION: WEST ABUTMENT – BACKWALL BETWEEEN PEDESTALS 9 & 10 – HOLLOWNESS, SEEPAGE, AND STAINING

PHOTO 7



DESCRIPTION: WSET ABUTMENT – PEDESTAL 10 – SPALLING AND CRACKING IN TOP LEFT FRONT CORNER (FACING)

PHOTO 8

C&S Engineers, Inc.
499 Col. Eileen Collins Blvd.
Syracuse, New York 13212
Phone: (315) 455-2000
Fax: (315) 455-9667
www.cscos.com

I-690 WB over Bridge Street - BIN 1064691



DESCRIPTION: BEGIN RIGHT WINGWALL – GENERAL CONFIGURATION - CRACKING AT TOP OF BACKWALL – SPALLS AT BASE OF GUIDE RAIL POSTS

PHOTO 9



DESCRIPTION: PIER – BEGIN FACE (WEST) - GENERAL CONFIGURATION – TWO CAPBEAM CONSTRUCTION

PHOTO 10

C&S Engineers, Inc.
499 Col. Eileen Collins Blvd.
Syracuse, New York 13212
Phone: (315) 455-2000
Fax: (315) 455-9667
www.cscos.com

I-690 WB over Bridge Street - BIN 1064691



DESCRIPTION: PIER - PEDESTAL 1 – SPALLS & CRACKS – LOCALIZED SECTION LOSS IN GIRDERS – VIEWED FROM BEGIN RIGHT

PHOTO 11



DESCRIPTION: PIER – PEDESTAL 1 – SPALLING – HOLLOWNESS IN CAPBEAM – VIEWED FROM END LEFT

PHOTO 12

C&S Engineers, Inc.
499 Col. Eileen Collins Blvd.
Syracuse, New York 13212
Phone: (315) 455-2000
Fax: (315) 455-9667
www.cscos.com

I-690 WB over Bridge Street - BIN 1064691



DESCRIPTION: PIER - PEDESTAL 1 – SECTION LOSS IN LEFT FASCIA GIRDERS – VIEWED FROM END RIGHT

PHOTO 13



DESCRIPTION: LEFT CAPBEAM – PEDESTAL 2 – SPALLS & CRACKS – VIEWED FROM BEGIN RIGHT – PED # MISLABEBED

PHOTO 14

C&S Engineers, Inc.
499 Col. Eileen Collins Blvd.
Syracuse, New York 13212
Phone: (315) 455-2000
Fax: (315) 455-9667
www.cscos.com

I-690 WB over Bridge Street - BIN 1064691



DESCRIPTION: PIER - COLUMN 3 – LOCALIZED CRACKING – VIEWED FROM BEGIN RIGHT- COLUMN # MISLABELED

PHOTO 15



DESCRIPTION: PIER – COLUMN 4 – SPALLS AND CRACKING IN RIGHT FACE

PHOTO 16

C&S Engineers, Inc.
499 Col. Eileen Collins Blvd.
Syracuse, New York 13212
Phone: (315) 455-2000
Fax: (315) 455-9667
www.cscos.com

I-690 WB over Bridge Street - BIN 1064691



DESCRIPTION: RIGHT CAPBEAM – PEDESTAL 6 – TYPICAL BEARINGS @ PIER – VIEWED FROM BEGIN RIGHT

PHOTO 17



DESCRIPTION: RIGHT CAPBEAM BETWEEN COLUNS HOLLOWNESS IN BOTTOM FACE – VIEWED FROM BEGIN SIDE

PHOTO 18

C&S Engineers, Inc.
499 Col. Eileen Collins Blvd.
Syracuse, New York 13212
Phone: (315) 455-2000
Fax: (315) 455-9667
www.cscos.com

I-690 WB over Bridge Street - BIN 1064691



DESCRIPTION: RIGHT CAPBEAM – END & BOTTOM FACES - CRACKS & HOLLOWNESS – VIEWED FROM FORM END BETWEEN COLUMNS

PHOTO 19



DESCRIPTION: ABOVE PIER @ JOINT BETWEEN PEDS 7 & 8 – RUSTING SIP FORMS – TYPICAL FOR BAYS 8 & 9 – LESSER DEGREE IN BAYS 1 & 2 – FROM BEGIN

PHOTO 20

C&S Engineers, Inc.
499 Col. Eileen Collins Blvd.
Syracuse, New York 13212
Phone: (315) 455-2000
Fax: (315) 455-9667
www.cscos.com

I-690 WB over Bridge Street - BIN 1064691



DESCRIPTION: RIGHT CAPBEAM – PEDESTAL 8 – CRACKS IN END AND LEFT FACES – VIEWED FROM END RIGHT

PHOTO 21



DESCRIPTION: RIGHT CAPBEAM – PEDESTAL 9 – CRACKS & HOLLOWNESS IN BEGIN & RIGHT FACES – VIEWED FROM BEGIN RIGHT

PHOTO 22

C&S Engineers, Inc.
499 Col. Eileen Collins Blvd.
Syracuse, New York 13212
Phone: (315) 455-2000
Fax: (315) 455-9667
www.cscos.com

I-690 WB over Bridge Street - BIN 1064691



DESCRIPTION: RIGHT CAPBEAM – PEDESTAL 10 – CRACKS AND HOLLOWNESS IN BEGIN FACE

PHOTO 23



DESCRIPTION: RIGHT CAPBEAM – PEDESTAL 10 – CRACKS & HOLLOWNESS IN END & LEFT AFCES – VIEWED FROM END LEFT

PHOTO 24

C&S Engineers, Inc.
499 Col. Eileen Collins Blvd.
Syracuse, New York 13212
Phone: (315) 455-2000
Fax: (315) 455-9667
www.cscos.com

I-690 WB over Bridge Street - BIN 1064691



DESCRIPTION: SPAN 1 – LEFT FASCIA – NUMEROUS SPALLS WITH EXTENSIVE MAP CRACKING – VIEWED FROM BEGIN LEFT

PHOTO 25



DESCRIPTION: SPAN 1 – RIGHT FASCIA – NUMEROUS SPALLS WITH EXTENSIVE MAP CRACKING – VIEWED FROM END RIGHT TOWAD BEGIN

PHOTO 26

C&S Engineers, Inc.
499 Col. Eileen Collins Blvd.
Syracuse, New York 13212
Phone: (315) 455-2000
Fax: (315) 455-9667
www.cscos.com

I-690 WB over Bridge Street - BIN 1064691



DESCRIPTION: SPAN 2 – LEFT FASCIA – NUMEROUS SPALLS WITH EXTENSIVE MAP CRACKING – VIEWED FROM END LEFT TOWARD BEGINNING

PHOTO 27



DESCRIPTION: SPAN 2 – RIGHT FASCIA – SPALLS WITH MAP CRACKING – VIEWED FROM RIGHT SIDE

PHOTO 28

C&S Engineers, Inc.
499 Col. Eileen Collins Blvd.
Syracuse, New York 13212
Phone: (315) 455-2000
Fax: (315) 455-9667
www.cscos.com

I-690 WB over Bridge Street - BIN 1064691



DESCRIPTION: EAST ABUTMENT (END) – GENERAL CONFIGURATION

PHOTO 29



DESCRIPTION: EAST ABUTMENT – END RIGHT WINGWALL – GENERAL CONFIGURATION - SOME HOLLOWNESS TOWARD BEGINNING

PHOTO 30

C&S Engineers, Inc.
499 Col. Eileen Collins Blvd.
Syracuse, New York 13212
Phone: (315) 455-2000
Fax: (315) 455-9667
www.cscos.com

I-690 WB over Bridge Street - BIN 1064691



DESCRIPTION: EAST ABUTMENT – PEDESTAL 1- MINOR CARCKING AT WINGWALL

PHOTO 31



DESCRIPTION: EAST ABUTMENT – BACKWALL BEHIND PEDESTAL 1 – CRACKS WITH BUILDUP OF EFFLORESCENCE

PHOTO 32

C&S Engineers, Inc.
499 Col. Eileen Collins Blvd.
Syracuse, New York 13212
Phone: (315) 455-2000
Fax: (315) 455-9667
www.cscos.com

I-690 WB over Bridge Street - BIN 1064691



DESCRIPTION: EAST ABUTMENT – PEDESTAL 3- TYPICAL EXPANSION BEARING AT THE ABUTMENT

PHOTO 33



DESCRIPTION: EAST ABUTMENT – PEDESTAL 10 – MINOR CRACKS WITH STAINING

PHOTO 34

C&S Engineers, Inc.
499 Col. Eileen Collins Blvd.
Syracuse, New York 13212
Phone: (315) 455-2000
Fax: (315) 455-9667
www.cscos.com

I-690 WB over Bridge Street - BIN 1064691



DESCRIPTION: EAST ABUTMENT – PEDESTAL 10 – BACKWALL ABOVE THE PEDESTAL – SPALLS & CRACKING

PHOTO 35



DESCRIPTION: EAST ABUTMENT – END RIGHT WINGWALL – GENERAL CONFIGURATION - MINOR CRACKING AT BACKWALL

PHOTO 36

C&S Engineers, Inc.
499 Col. Eileen Collins Blvd.
Syracuse, New York 13212
Phone: (315) 455-2000
Fax: (315) 455-9667
www.cscos.com

I-690 WB over Bridge Street - BIN 1064691



DESCRIPTION: STRUCTURE DECK LOOKING END TO BEGIN

PHOTO 37

DESCRIPTION:

PHOTO

1064691 I690 WB OVER BRIDGE STREET

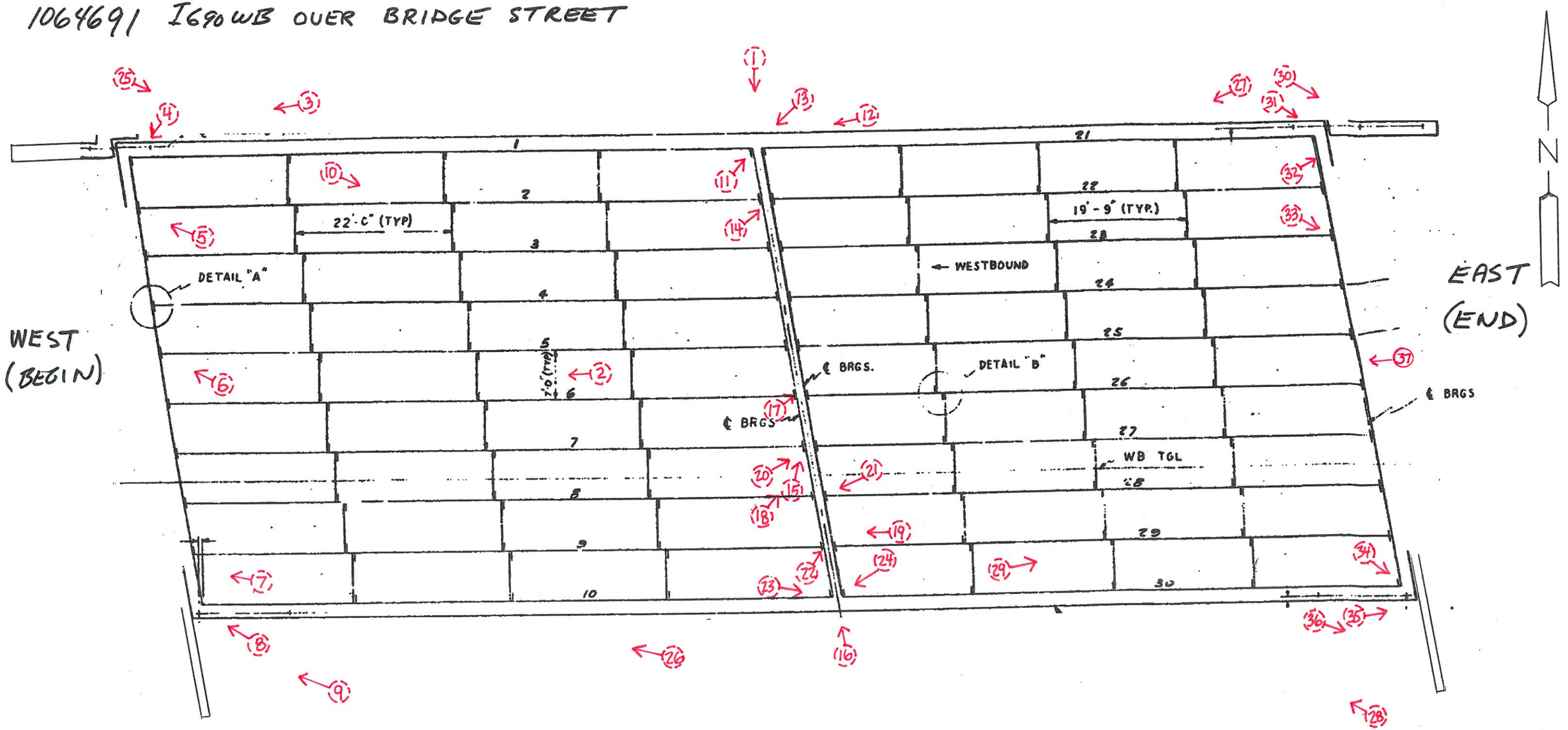

PHOTO LOCATION PLAN

(○→) INDICATES PHOTO WAS TAKEN BELOW DECK

(○) INDICATES PHOTO WAS TAKEN ABOVE DECK

ASBESTOS DOCUMENTATION

HUDSON ENVIRONMENTAL SERVICES, INC.
Mail: 22 Hudson Falls Rd., So. Glens Falls, NY 12803
Delivery: 211 Ferry Blvd., So. Glens Falls, NY 12803
Phone: 518/747-1060 Fax: 518/747-1062

ANALYTICAL TEST RESULTS
N.Y.S.D.O.H. LAB ID#11140
*ANALYZED BY N.Y.S.D.O.H. LAB ID#10898

CLIENT: NYSDOT Region 3

SAMPLE DESCRIPTION: See Below

MATRIX: Solid

LOCATION: BIN #1064691

H.E.S. #: See Below

DATE SAMPLED: 08/28/03

TIME SAMPLED: Not Specified

DATE SAMPLE RECD: 09/03/03

TYPE SAMPLE: Grab

SAMPLER: W.Kirk/NYSDOT Region 3

NOB BULK MATERIAL ANALYSIS FOR ASBESTOS

TEST METHOD:EPA-600 93/116 JULY 1993 NYSDOH ELAP 198.1 AND 198.4

HES LAB ID#: 030903V	V01	V02	V03
LAB ID#: E03	2439	2440	2441
CLIENT: SAMPLE ID/DESCRIPTION	BIN #1064691-01 Beg Bearing #2	BIN #1064691-02 G03 Span #1 Near Pier	BIN #1064691-03 G-5 Span 2 Near Pier
COLOR	Green	Green	Green
HOMOGENEOUS(YES/NO)	Yes	Yes	Yes
ORGANIC %	42	41	40
ACID-SOLUBLE INORGANICS %	19	24	24
INSOL NON-ASBESTOS INORGANIC %	39	35	36
ASBESTOS ANALYSIS			
CHRYSOTILE %			
AMOSITE %			
CROCIDOLITE %			
OTHER AMPHIBOLE %			
TOTAL ASBESTOS % (PLM)	ND	ND	ND
ASBESTOS ANALYSIS			
TYPE OF ASBESTOS			
PERCENTAGE OF ASBESTOS (TEM)	ND	ND	ND
TOTAL	100	100	100

ND=NONE DETECTED

Approval By: M

Date: 9/12/03

Hudson Environmental Services, Inc. certifies that the services provided were performed in accordance with the New York State Department of Health, Environmental Laboratory Approval Program certification manual. This report shall not be reproduced without written consent from HES, Inc. In the event of an error, HES's sole responsibility will be to perform reanalysis at its own expense. HES, Inc. assumes no other liability for damages incurred from the interpretation or use of the analysis provided.

R-3 DESIGN GRO
SEP 16 2003
R.D.E.
Highway Design
Landscape
Engr. Liaison
Geotech
ROW
Testa
Structures
Skelly

(OVER)

HUDSON ENVIRONMENTAL SERVICES, INC.

Mail: 22 Hudson Falls Road, South Glens Falls, NY 12803
Delivery: 211 Ferry Blvd., South Glens Falls, NY 12803
Phone: 518/747-1060 Fax: 518/747-1062

CHAIN OF CUSTODY RECORD/ Lab Work Request

Client NYS Dept. of Transportation-Region 3
Client Contact/Person # Christopher Anderson
Project Location B.I.N. 1064691
Purchase Order
HES Contact William Frawley

Mail Address NYS Dept. of Transportation
333 E. Washington Street
Syracuse, NY 13202
Phone # (315) 428-4628

HES Use Only Lab ID	Sample ID / Description	Date Collected	TIME A=a.m. P=p.m.	SAMPLE TYPE C=Composite G=Grab MATRIX	C	G	# Conts.	ANALYSIS REQUIRED
X30903X01	BIN 1064691-01 Beg Bearing #2		A P	SO		X	1	Asbestos Bulk - NOB
			A P					
			A P					
V02	BIN 1064691-02 6-3 Span #1 Near Pier		A P	SO		X	1	" " "
			A P					
			A P					
V03	BIN 1064691-03 6-5 Span 2 Near Pier		A P	SO		X	1	" " "
			A P					

Matrix: S - Soil; SE - Sediment; SO - Solid; SL - Sludge; O - Oil; DW - Drinking Water; GW - Ground Water; SW - Surface Water; L - Leachate; A - Air; Wi - Wipe; DS - Drum Solids; DL - Drum Liquids; X - Other; WW - Waste Water

Special Instructions: Bridge coating - If PLM negative, TEM confirmation on all.

Sampled by: (Signature) W.A. Kich	Date/Time 8/28/03	Received by: (Signature)	Date/Time 9-8-03 1240 Pm
Relinquished by: (Signature)	Date/Time	Received by: (Signature)	Date/Time
Relinquished by: (Signature)	Date/Time	Received by: (Signature)	Date/Time
Dispatched by: (Signature)	Method of Shipment:		Date/Time
Received @ Laboratory:	Date/Time 9/5/03 2:30PM	Turnaround Time: Normal	Lab Approval:

WHITE - Lab Copy YELLOW - Sampler Copy PINK - Generator Copy

HES Use Only

Sample Was: 1. Shipped or Hand Delivered NOTES:
2. Ambient or Chilled NOTES: 23
3. Received Broken/ Leaking (Improperly Sealed) Y (N) NOTES:
4. Properly Preserved NOTES: (Y) N
5. Received Within Holding Times (Y) N NOTES:

COC Tape Was: 1. Present on Outer Package (Y) N
2. Unbroken on Outer Package Y (N)
3. Present on Sample (Y) N
4. Unbroken on Sample NOTES: Y (N)

COC Record Was: 1. Present upon Receipt of Samples (Y) N

Discrepancies Between Sample Labels and COC Record? Y (N) NOTES:

Sep-12-03 06:33A Ved J. Kukreja, Ph.D. P.03

ASBESTOS DOCUMENTATION FROM WATTS ARCHITECTURE & ENGINEERING, INC.

(WILL REPLACE BIN FOLDER ASBESTOS REPORT UPON COMPLETION)

NEW YORK STATE
DEPARTMENT OF TRANSPORTATION
D031085 P.I.N 3501.60

LEVEL 1 LOAD RATING
B.I.N. 1064691
I-690 WB over Bridge Street

LOAD RATING SUMMARY TABLE (LOAD FACTOR)					
CONTROLLING MEMBER	**CONTROLLING PARAMETER**	**LIVE LOAD**	**LIVE LOAD TYPE**	**INVENTORY RATING**	**OPERATING RATING**
SPAN 2 INTERIOR GIRDER (G2)	SERVICE	HS20-44	Axle Load	HS 24.2 (43.7 TONS)	HS 40.5 (72.9 TONS)
SPAN 2 INTERIOR GIRDER (G2)	SERVICE	ALTERNATE MILITARY LOADING	Axle Load	1.540 (36.9 TONS)	2.573 (61.7 TONS)

DOES NOT INCLUDE FUTURE WEARING COURSE

ANALYSIS METHOD:LOAD FACTOR

RECOMMENDED POSTING AS-IS CONDITION: _____ Tons __X__ None

CALCULATED BY:



DATE: 06/16/14

QUALITY ASSURANCE BY:



DATE: 6/06/14

C&S COMPANIES®

499 Col. Eileen Collins Blvd.
Syracuse, NY 13212
phone 315-455-2000
fax 315-455-9667
www.cscos.com

ENGINEERS
DESIGN BUILD
TECHNICAL RESOURCES
OPERATIONS

C&S Engineers, Inc.
Syracuse Hancock International Airport
Syracuse, NY 13212
phone 315-455-2000
fax 315-455-9667
www.cscos.com

TECHNICAL MEMORANDUM

TO: FILE (190.514.001)

FROM: JESSICA S. BAUER, P.E.
NYSPE 084915

DATE: MARCH 21, 2014

C&S PROJECT NO.: 190.514.001

RE: SEISMIC ASSESSMENT SUMMARY
NEW YORK STATE DEPARTMENT OF TRANSPORTATION
D031085; PIN 3501.60; I-81

BIN: 1064691 Seismic Assessment

This memorandum summarizes the seismic assessment conducted for BIN 1064691 as part of the Interstate 81 Project in Syracuse, NY. The purpose of the assessment is to determine if seismic retrofits are warranted at the superstructure to substructure connection, and if further seismic evaluation of the structure is required. This memorandum will give the assessment results, retrofits required and recommendations for further seismic evaluation of the structure.

ASSESSMENT PROCEDURE

The seismic assessment was performed in accordance with the FHWA Seismic Retrofitting Manual for Highway Structures: Part 1 - Bridges, January 2006. As per the referenced manual, seismic assessment was performed for both lower level and upper level earthquake ground motion. The lower level earthquake ground motion has a reasonable likelihood of occurrence within the life of the bridge (50% probability of exceedance within a 75 year bridge life). The upper level earthquake ground motion has a finite likelihood of occurrence within the life of the bridge (7% probability of exceedance within a 75 year bridge life).

Values for the spectral acceleration for the Syracuse area used in the assessment are as follows:

- Lower Level Earthquake Ground Motion for a Short Period (0.2 seconds): $S_S = 0.0251$
- Lower Level Earthquake Ground Motion for a Long Period (1.0 seconds): $S_1 = 0.0076$
- Upper Level Earthquake Ground Motion for a Short Period (0.2 seconds): $S_S = 0.139$
- Upper Level Earthquake Ground Motion for a Long Period (1.0 seconds): $S_1 = 0.047$

These values are considered constant and are the same for all seismic assessments of bridges in the Syracuse area.

The Site Class is based on the soil conditions at the bridge location. It was determined that this parameter has little effect on the results of the seismic assessment because the spectral

You created this PDF from an application that is not licensed to print to novaPDF printer (http://www.novapdf.com)

acceleration values for the Syracuse area are small. Based on this, a site class of D was used for all seismic assessments of bridges in the Syracuse area.

Bridge parameters used in the seismic assessment were retrieved from the record drawings and WinBolts data.

The seismic assessment takes into account the anticipated service life, importance, and the seismic exposure of the bridge to determine a seismic retrofit category (SRC). The SRC is then used to determine seismic evaluation methods and retrofit measures. There are four SRCs, A through D. Seismic retrofit category A is the lowest category; bridges in this category do not require retrofits or further seismic evaluation. Seismic retrofit category D is the highest category; bridges in this category requiring the most rigorous seismic evaluations and retrofits.

ASSESSMENT RESULTS

The SRC for the bridge is "**C**" for lower level earthquake ground motion and "**B**" for upper level earthquake ground motion.

RETROFITS REQUIRED

Bearing replacements and seat width improvements are not required at the abutments or pier. Additional retrofits may be required if further seismic evaluation is needed.

RECOMMENDATIONS FOR FURTHER SEISMIC EVALUATION

For the lower level earthquake ground motion, it is recommended that capacity/demand ratios for bridge components are calculated as per Section 5.4 of the referenced manual. For the upper level earthquake ground motion, it is recommended that the capacities of the bearings are checked as per Section 5.2 of the referenced manual.

Retrofit cost estimates will be provided after any further required seismic evaluations are completed.

You created this PDF from an application that is not licensed to print to novaPDF printer (http://www.novapdf.com)

ENGINEERS
DESIGN BUILD
TECHNICAL RESOURCES
OPERATIONS

C&S Companies

C&S Engineers, Inc.
Syracuse Hancock International Airport
Syracuse, NY 13212
phone 315-455-2000
fax 315-455-9667
www.cscos.com

TECHNICAL MEMORANDUM

TO: **FILE (190.514.001)**

FROM: **PAUL BYRNE, P.E.**
NYSPE 055928

DATE: **JUNE 13, 2014**

C&S PROJECT NO.: 190.514.001

RE: **NEW YORK STATE DEPARTMENT OF TRANSPORTATION**
D031085; PIN 3501.60; I-81 Opportunities, BIN 1064691 Fatigue Evaluation

---

This memorandum documents a fatigue evaluation conducted for the existing Interstate 81 Viaduct Project. Existing structures with AASHTO Category D, E, and E' fatigue-prone details require 100% hands-on inspection unless proven to be exempt. The purpose of the evaluation is to assess the remaining life of fatigue-prone components.

EVALUATION PROCEDURES

The fatigue evaluation was performed in accordance with the AASHTO Guide Specification for Fatigue Evaluations of Existing Steel Bridges, 1990. Fatigue-prone welds identified in the biennial inspection reports were located on record drawings and confirmed visually in the field. Additional information concerning fatigue-prone welds located in BIN folders was also obtained and reviewed prior to inspection.

EVALUATION RESULTS

The results of the fatigue evaluation of the existing bridge are shown below. The remaining safe fatigue life of the Span 1 Exterior fatigue components have been **exhausted** and the remaining safe fatigue life of the Span 1 Interior and Span 2 Exterior fatigue components are nearing exhaustion.

Fatigue Detail Location	Remaining Safe Fatigue Life (Years)	Remaining Mean Fatigue Life (Years)
Span 1, Exterior Girders, End of Bottom Flange Cover Plate	-9.58	55.66
Span 1, Interior Girders, End of Bottom Flange Cover Plate	2.48	114.98
Span 2, Exterior Girders, End of Bottom Flange Cover Plate	9.87	151.37
Span 2, Interior Girders, End of Bottom Flange Cover Plate	34.44	272.25

E. Recommendations:

The purpose of this deck evaluation is to document and determine existing conditions of the deck. It will be used as a tool for developing the scope of work and cost estimates for the development and comparison of alternatives for the overall project.

The total damaged area is approximately 13% of the total deck area. Due to the age, condition and high chloride-ion content of the bridge deck concrete, the bridge deck should be rehabilitated or replaced to meet current standards and to mitigate excessive future maintenance costs.

Option 1 – Scarify and Bridge Deck Overlay
The maximum service life this option would provide is 25 years. The design life of this project is 30 years (ETC +30). This option does not meet the project objectives of obtaining 30+ years of service life.

Option 2 – Bridge Deck Rehabilitation with 100% Deep Removal
This option will involve partial depth reconstruction with top mat rebar exposure of the entire bridge deck to remove chloride contaminated concrete (100% deep removal). The existing bridge deck thickness is 9 ¼" with 3" of concrete cover over the top mat of reinforcing. The proposed partial depth reconstruction will include the addition of ¼" of concrete to provide the standard of 9 ½" bridge deck thickness. The existing top mat of reinforcing bars will be removed and replaced to accommodate the standard 3" cover of concrete. The existing non-conforming bridge railing will be removed and replaced with single-slope concrete barrier. The existing armor bridge joints will be replaced with armorless bridge joints. The Level 1 Load Rating for the final condition was found to be acceptable. This option would provide a service life of 35 years to the bridge deck. The construction cost for this option is $ 0.723 million.

Option 3 – Bridge Deck Replacement with Cast-In-Place Concrete

This option will involve the complete demolition of the existing bridge deck, 2-rail bridge railing, and armor bridge joints. The bridge deck would be replaced with a new concrete deck, new single-slope concrete barrier and new armorless bridge joints. The new bridge deck would be 9 ½" standard thickness as compared to the 9 ¼" existing thickness. The Level 1 Load Rating for the final condition was found to be acceptable. This option would provide a service life of 40 years to the bridge deck. The construction cost of this option is $0.981 million.

Option 4 – Bridge Deck Replacement with Pre-cast Concrete Deck Panels

This option will have the highest construction cost of all of the options however; traffic control costs may be lower due to reduced construction time. Comparison of accelerated construction to conventional construction is beyond the scope of work for this project at this time.

IN DEPTH INSPECTION REPORT

D031085 P.I.N. 3501.60

B.I.N. 1064692

TEAM LEADER Bruce Opalka, P.E. 60413
NYSPE LICENSE #

ASSISTANT TEAM LEADER Mike Rode

ASSISTANT TEAM LEADER Chuck Brooks

FEATURE CARRIED I-690 EB

FEATURE CROSSED Bridge Street

DATE FIELD WORK BEGAN January 23, 2014

DATE FIELD WORK COMPLETED January 24, 2014

TABLE OF CONTENTS

- TP 349 & 350
- IN-DEPTH CONDITION DOCUMENTATION
- IN-DEPTH PHOTO DOCUMENTATION
- ASBESTOS REPORT

TP 349 & TP 350

BRIDGE ELEMENT RATINGS

Inspection Date: 10/17/2013 RC: 33 BIN: 1064692

Bridge Ratings

Carried: 690I 690I33013008 Crossed: BRIDGE STREET CheckValue: 1,816,065,263

Inspection Agency: 13 - Consultant Type of Inspection: 1 - BIENNIAL
GTMS: 302 -- Steel - Stringer/Multi-Beam or Girder
POSTINGS: See Gen Rec Page 1 for Postings at time of inspection.
Further Investigation Needed: No
State Highway Number: 68-4 Milepoint: 13.18 AADT/Yr: 25050 / 2006
Orientation: 3 - East Political Unit: 0233 - Town of DEWITT Year Built: 1971
Total Spans: 2 Ramp Bridge Attached To Span: NA BIN: NA
General Recommendation: 5 Computed Condition Rating: 4.672

Abutment Ratings:	**Beg Abut**	**End Abut**
Joint with Deck	8	4
Bearings, Bolts, Pads	4	4
Seats and Pedestals	5	4
Backwall	5	5
Stem (Breastwall)	8	8
Erosion or Scour	6	5
Footings	9	9
Piles	9	9
Recommendation	5	5

Wingwall Ratings:	**Beg Abut**	**End Abut**
Walls	4	4
Footings	9	9
Erosion or Scour	6	6
Piles	9	9

Channel Ratings:	**Channel**
Stream Alignment	8
Erosion and Scour	8
Waterway Opening	8
Bank Protection	8

Approach Ratings:	**Approaches**
Drainage	5
Embankment	6
Settlement	6
Erosion	6
Pavement	6
Guide Railing	6

Number of Flags Issued:

RED: 0 Yellow: 0 Safety: 0

Vulnerability Reviews Recommended: 1=Yes, 2=No, 3=NA, X=NotActive

Hydraulic: 3	Overload: X	Steel: 2
Collision: 2	Concrete: X	Seismic: X

Inspector's Signature: CheckValue: 1,816,065,263 Date: 10/17/2013

James W. Gorzynski,PE () (Inspector ID:3100044)

Signed copy of this inspection report is available in the appropriate NYSDOT Regional Office

Reviewed By: Date: 1/3/2014

Stephen L. Gauthier,PE () (QC ID:3100077)

Signed copy of this inspection report is available in the appropriate NYSDOT Regional Office

Inspection Date: 10/17/2013 RC: 33 BIN: 1064692

Span Ratings

Carried: 690I 690I33013008 Crossed: BRIDGE STREET CheckValue: 1,816,065,263

Deck Element Ratings:	001	002
Wearing Surface	4	4
Curbs	6	6
Sidewalks, Fascias	4	4
Railings, Parapets	5	5
Scuppers	8	8
Gratings	8	8
Median	8	8
Mono Deck Surface	4	4

Superstructure Ratings:	001	002
Structural Deck	5	5
Primary Members	5	5
Secondary Members	6	6
Paint	4	4
Joints	4	8
Recommendation	5	5

Pier Ratings:	001	002
Bearings, Bolts, Pads	4	8
Pedestals	4	8
Top of Cap or Beam	5	8
Stem Solid Pier	8	8
Cap Beam	6	8
Pier Columns	5	8
Footings	9	8
Erosion or Scour	6	8
Piles	9	8
Recommendation	5	8

Utility Ratings:	001	002
Lighting	8	8
Sign Structure	8	8
Utilities and Support	8	8

Field Notes:

Field Date	Arrival	Departure	Temp (C)	Temp (F)	Weather Conditions
10/17/2013	7:30:00 AM	3:50:00 PM	16	60	Fair

IN-DEPTH CONDITION DOCUMENTATION

IN DEPTH INSPECTION REPORT

BIN 1064692

- **In-Depth Condition:**

Visual Inspection: Rehabilitation plans show a complete deck scarification with concrete overlay and joint replacement under contract D95879 (no date on plans but were signed 5/78). Contract D256745 (7/95) installed new armored joint system with compression seals, however, the West (Begin) Abutment received a poured construction joint instead, per hand written notes on the record plans and verified by our the field investigation. There are fixed bearings at the West Abutment.

Cracks, spalls, and other field observations are shown on the plans. Below is a brief summary of conditions for each feature.

Superstructure

- **Deck –** See Bridge Deck Evaluation Report.
- **Steel –** See Structural Steel Inspection Summary.
- **Bearings –** Bearings are original. The expansion type slide over a bronze plate. Bearings (fixed) on the beginning abutment have some paint loss with associated rusting, fascias in worst condition. Pier bearings have heavy build up of paint chips and pack rust debris with some delamination of the steel. Expansion bearings appear frozen in place. Fascia bearings (expansion) on the end abutment have some paint loss with associated rusting. Interior bearings appear in satisfactory condition.

Substructure

- **West Abutment (Begin) –** The beginning left retaining wall is generally in good condition except for a 12” by 12” area of map cracking at mid height on the left. The backwall has heavy stains from road splash/snow melt for full height by 12” W in beginning left corner (right side-facing). Some map cracking at the top of this staining. The

compression seal above obviously leaks as seen by the extensive staining across the width of the backwall. The staining has progressed to extensive map cracking with efflorescence seepage and punky concrete for full height at the far right pedestals and some spalling to 3" D in the top right (left-facing) corner of the backwall. Pedestal 1 (11 from plans) has map cracking with efflorescence seepage on the left (north) and right (south) faces and a full height stain with minor cracking at the top on the front (facing) face. A few minor cracks with some staining on pedestal 10. The right cheek wall and embankment wall behind the cheek wall has several localized spalls to 3" deep. The vertical faces have scattered mapcracking with punky concrete.

- **Pier –** Column 1 (column 5 from original contract plans) on the begin (south) face has for the top 8' by 2' W is delaminated which wraps around to the left (north) face where a +/-1/8" W vertical crack from the top down is 6' L with 6" delaminated concrete on either side. The end (east) face from the top down has a 3.5' L by 1/8" W vertical crack. Column 2 has some delamination from the top down on the begin face (west) 2.5' H by 1' W at the top left corner which wraps around to the left (north) face for 1'. Additionally, on the left face in the other top corner there is delamination at 6" W by 24" L which wraps around to the end (east) face for 12". The delamination on the left column (1) on the begin face extends into the left capbeam (over columns 1 & 2) for 2' H by 3' W. The capbeam also has delamination directly below pedestal 1 on the same face for 18" W by full height of capbeam and below this on the bottom face there is delamination for an area of 2' by 2'. On the end (east) face there is a single 12" by 12" minor spall below pedestal 2. The entire right (south) face is either spalled, map cracked or delaminated. Pedestal 1 (pedestal 11 from original contract plans) has extensive cracking with some hollowness

on both side faces (south & north) and pedestal 2 has a 12” by 12” by 2” D spall on the end face. Column 3 (column 7 from original contract plans) has some minor spalling in top right corner of begin (west) face 12” H by 18” W which wraps around the corner to the right (south) face for 6”. Column 4 has light delamination on the begin (west) face in bottom left 12” by 6” W and top center 24” by 24”. The end and right faces have vertical hairline cracking in their adjoining corner from the top down for 6’ L and for 18” W the concrete is delaminated. On the end (east) at mid height there is an intersecting horizontal crack for 18 “ long. At the intersection of the cracks there is spalling to 2” D by 6” W by 12” H. The right capbeam over columns 3 and 4 has some delamination on begin (west) face in top left corner 18” by 18”, spalling to 2” D by 18” W by 12” H directly over column 3’s right side, cracking and spalling in bottom corner just left of center line of capbeam for 6” H by 2.5’ L which extends for 6” into bottom face of capbeam, and delamination over column 4 for 6” H by 2.5’ W. The end (east) face on the bottom corner for 6” H below pedestal 7 & 8 is cracked and delaminated for 48” L which extends under to the bottom face for 6”. The right (south) face is completely map cracked through-out. Pedestal 8 has horizontal cracking with hollow concrete on begin, left, and right faces and map cracking through-out on the end (east) face.

- **East Abutment (End) –** The end left retaining wall has minor map cracking with efflorescence bleeding at top of fascia pedestal and below. The backwall has a localized area of spalling and punky concrete, 1’ H by 3’ W, just below the deck and against the left retaining wall. The backwall also has full height water stains between pedestals 1 & 2; and rust stains to right of pedestal 2 and between pedestals 9 & 10. There is extensive map cracks with bleeding efflorescence behind pedestal 10 over to the cheekwall. The end right

cheekwall has map cracking and a minor 2” D spall in the top 18” on the front face (begin) and full height spalling to 3” D, cracking, and punky concrete on the back face (end) which extends across the right face (south) for 12”. For the retaining wall behind the cheek wall there is complete map cracking, punky concrete, and spalling to 3” D for that portion that can be seen.

STRUCTURAL STEEL INSPECTION SUMMARY

BIN 1064692

Special Emphasis Inspection Required
Non-Redundant/Fracture Critical Members – No
Pin and Hangers – No
Fatigue-Prone Welds – Yes
Non-Categorized Fatigue-Prone Details – No
Other (Specified in Text) – No

Special Emphasis Details: Partial length coverplate weld ends on all girders on both spans appear in satisfactory condition.

Overall Steel Condition: There is advanced section loss to the fascia girders below the pier joint as detailed below, however, other areas of the girders and cross members are in satisfactory condition.

Paint: Paint is peeling and blistering on all lower flanges of girders with areas over traffic and fascia girders in worst condition. This condition occurs in spot locations on other parts of the girders. Concentrated paint loss below the pier joint has allowed advanced section loss to occur.

Section Loss: Heavy seepage through the pier joint has led to nominal losses (<5%) in the steel directly below, however, more advanced section loss has occurred in the beginning of the left (north) fascia girder (G-1) web of span 2 at the pier to +/-10% for an area of 6" H by 22" L just above the bottom flange. A field measurement shows that the end of the girder to the centerline of the bearing is 5.5", therefore, approximately 16.5" of the loss occurs after the centerline of the bearing. The same condition is occurring in the same location on the right (south) fascia girder (G-10) of span 2 also. Here, the section loss as measured by a 'D' meter indicates the loss to be in the range of 55% for the web in an area of 5.5" H by 16" L. This would translate into 10.5" of loss after the centerline of the bearing. Additionally, the loss for the adjoining connection plate for the cross bracing indicated 30% loss.

BIN 1064692 Core locations E.B plan Sheet

1064692 I690 EB OVER BRIDGE STREET

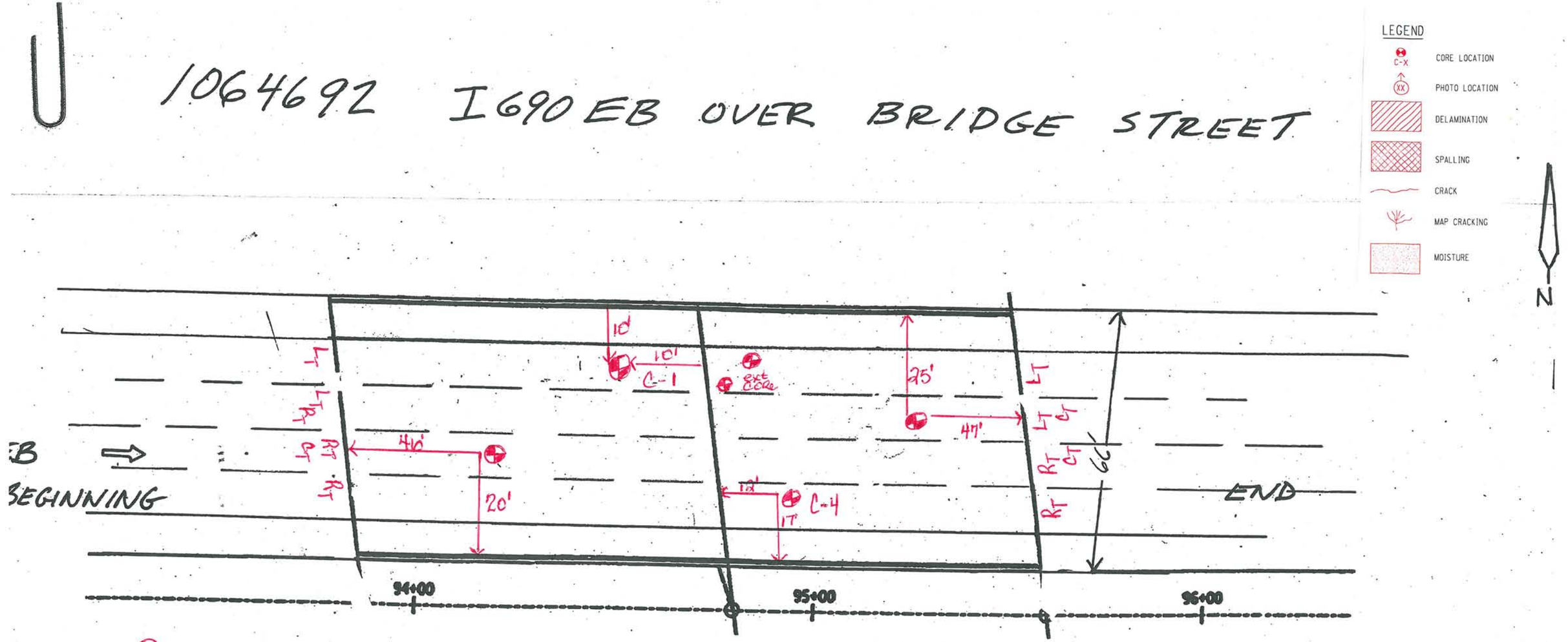

BIN 1064692
I-690 EB o/Bridges

C-3 – 46' - 20' C-2 47' - 25'

C-4 – 14' - 12' C-1 10' - 10'

NTS

BIN 1064692 EB Plan Sheet

1064692 I690 EB OVER BRIDGE STREET

LEGEND
- C-X CORE LOCATION
- XX PHOTO LOCATION
- DELAMINATION
- SPALLING
- CRACK
- MAP CRACKING
- MOISTURE

N

- Shld area sound through entire length
- Top of fascia good Condition
- granite curb good Condition
- galv. Rail weathered

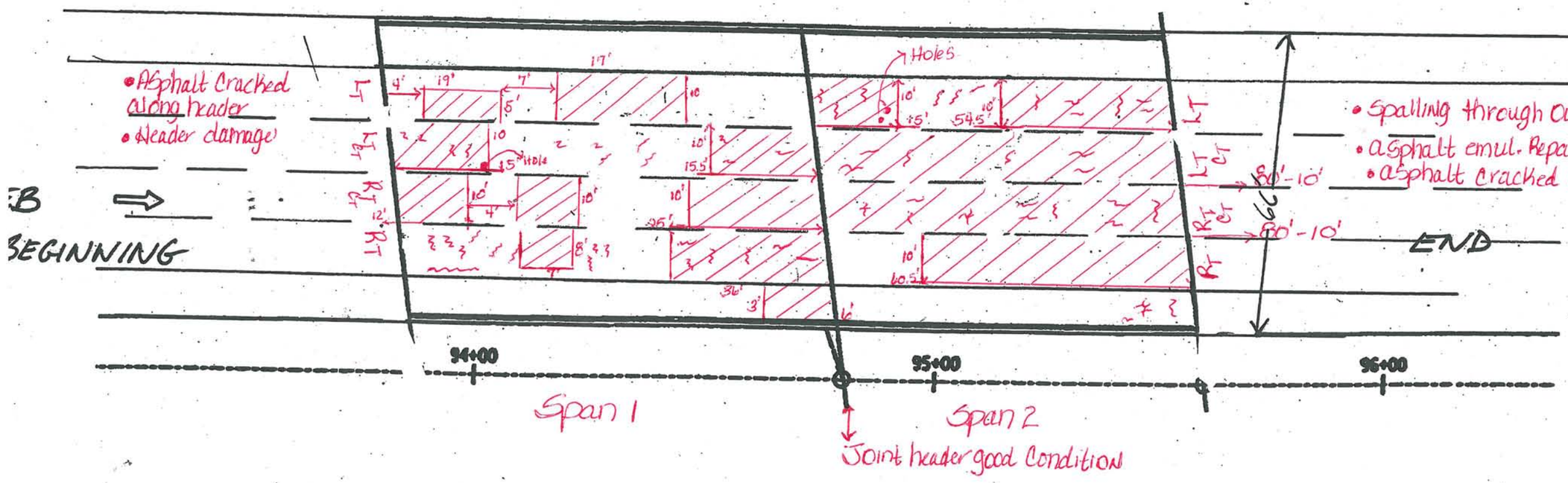

- Shld area good Condition w/ some Cracking Span 1 & 2

BIN 1064692
I-690 EB O/Bridge St.

NTS

1064992 EB

E. SYR. LEFT SIDE

92 EB

RUSTING OF S.I.P. FORMS & STEEL

10% SECTION LOSS AT END OF SPAN 2 WEB ON BOTTOM FOR 6"H BY 22"L

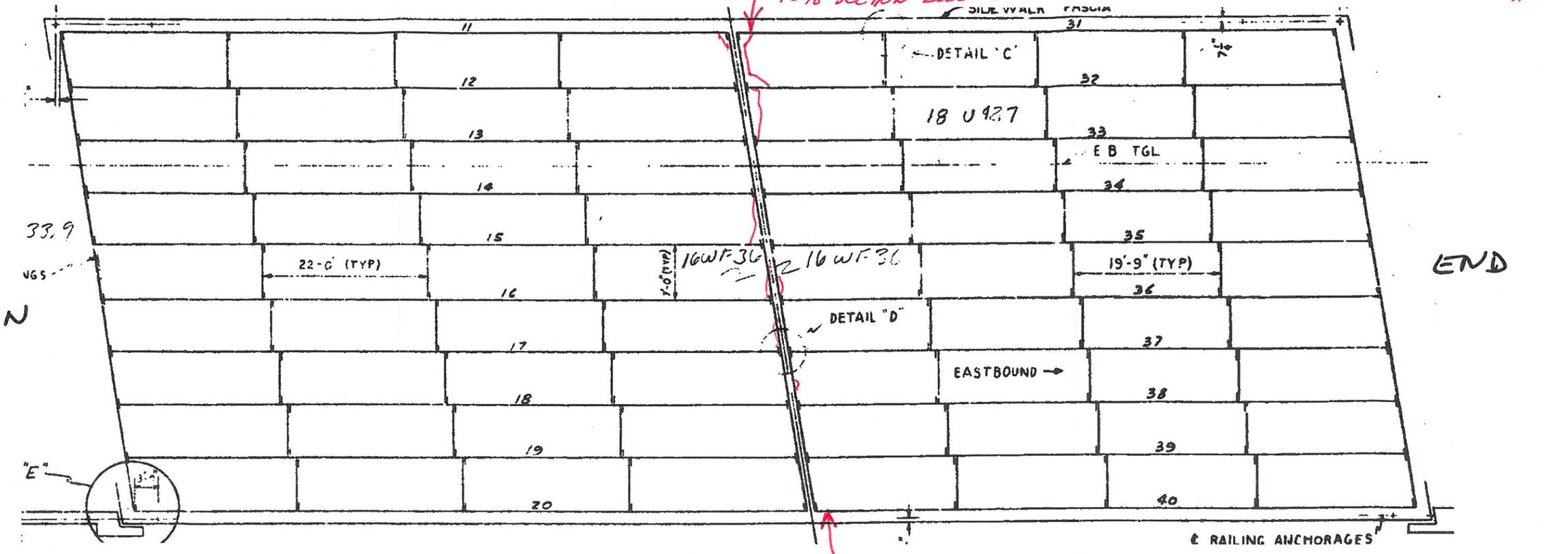

10% SECTION LOSS AT END OF SPAN 2 WEB ON BOTTOM FOR 5.5"H BY 16"L

LEGEND

- C-X — CORE LOCATION
- XX — PHOTO LOCATION
- DELAMINATION
- SPALLING
- CRACK
- MAP CRACKING
- MOISTURE

IN-DEPTH INSPECTION FIELD NOTES

PIER NUMBERS IN PICTURES DO NOT LINE UP TO NUMBERS IN NOTES

F.I.S.H. 68-4 F.I.S.H. 68-5 F.I.S.H.

FED. AID REG. NO.	STATE	FEDERAL AID PROJECT NO.	SHEET NO.	TOTAL SHEETS
	NEW YORK	I-881-8(102) I-690-3(28)	269	270

INTERSTATE ROUTE CONNECTION 570
ERICKSON STREET TO BUTTERNUT INTERCHANGE

LEGEND

- CORE LOCATION (C-X)
- PHOTO LOCATION (XX)
- DELAMINATION
- SPALLING
- CRACK
- MAP CRACKING
- MOISTURE

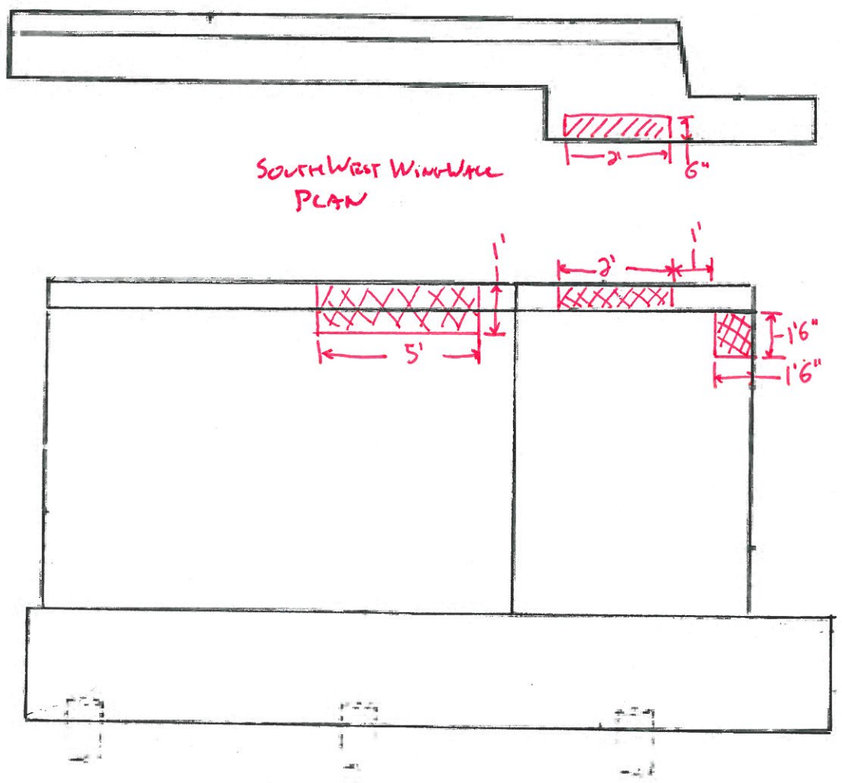

SOUTHWEST WINGWALL ELEVATION

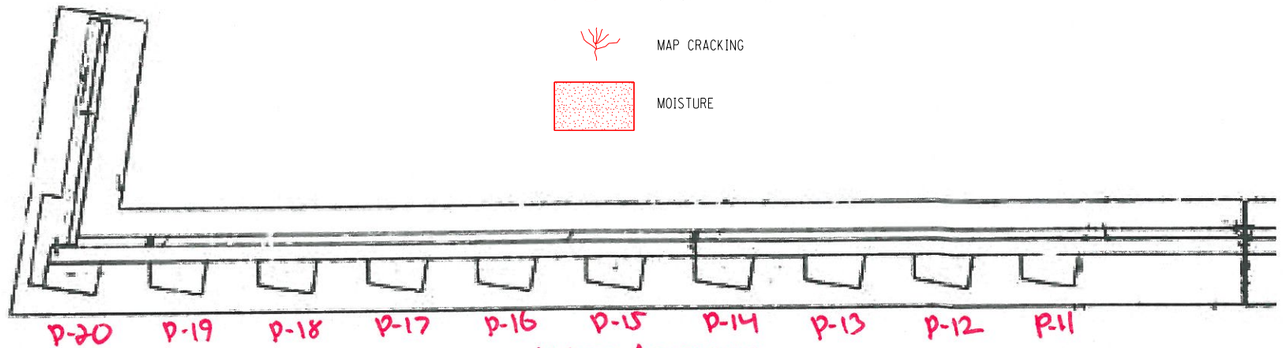

WEST ABUTMENT PLAN

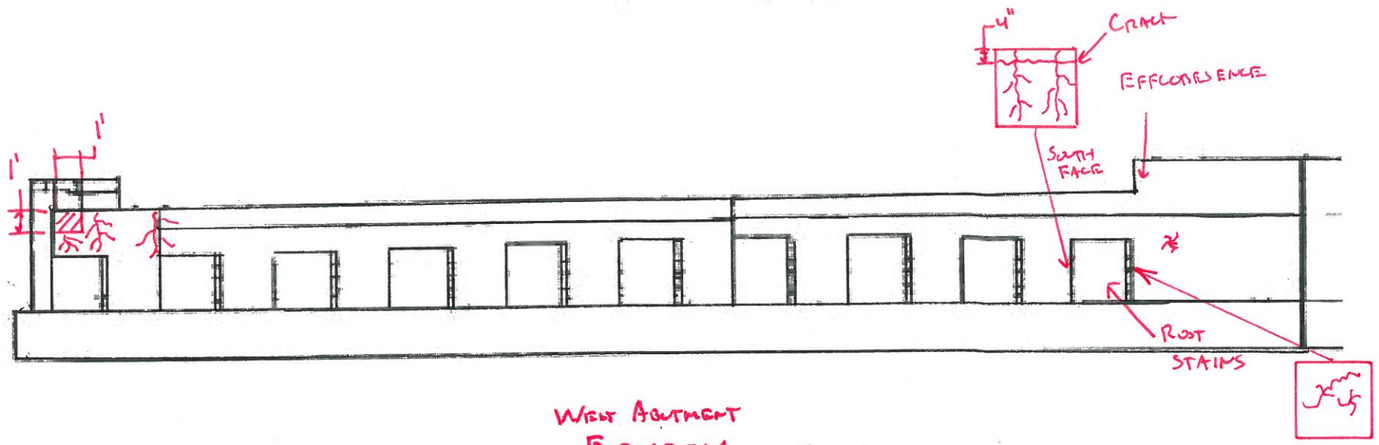

WEST ABUTMENT ELEVATION

BIN 1064692

WEST ABUTMENT

DRAWING NO. 5 OF 16

PROJECT ENGINEER
IN CHARGE OF
DESIGNED BY
DESIGN CHECKED BY
DETAILED BY W. LEHLER
DETAIL CHECKED BY

F.I.S.H. 68-4 F.I.S.H. 68-5 F.I.S.H.

FED. RD. REG. NO.	STATE	FEDERAL AID PROJECT NO.	SHEET NO.	TOTAL SHEETS
	NEW YORK	I-281-2 (108) I-690-3 (23)	275	29[illegible]

INTERSTATE ROUTE CONNECTION 570
ERICKSON STREET TO BUTTERNUT INTERCHANGE

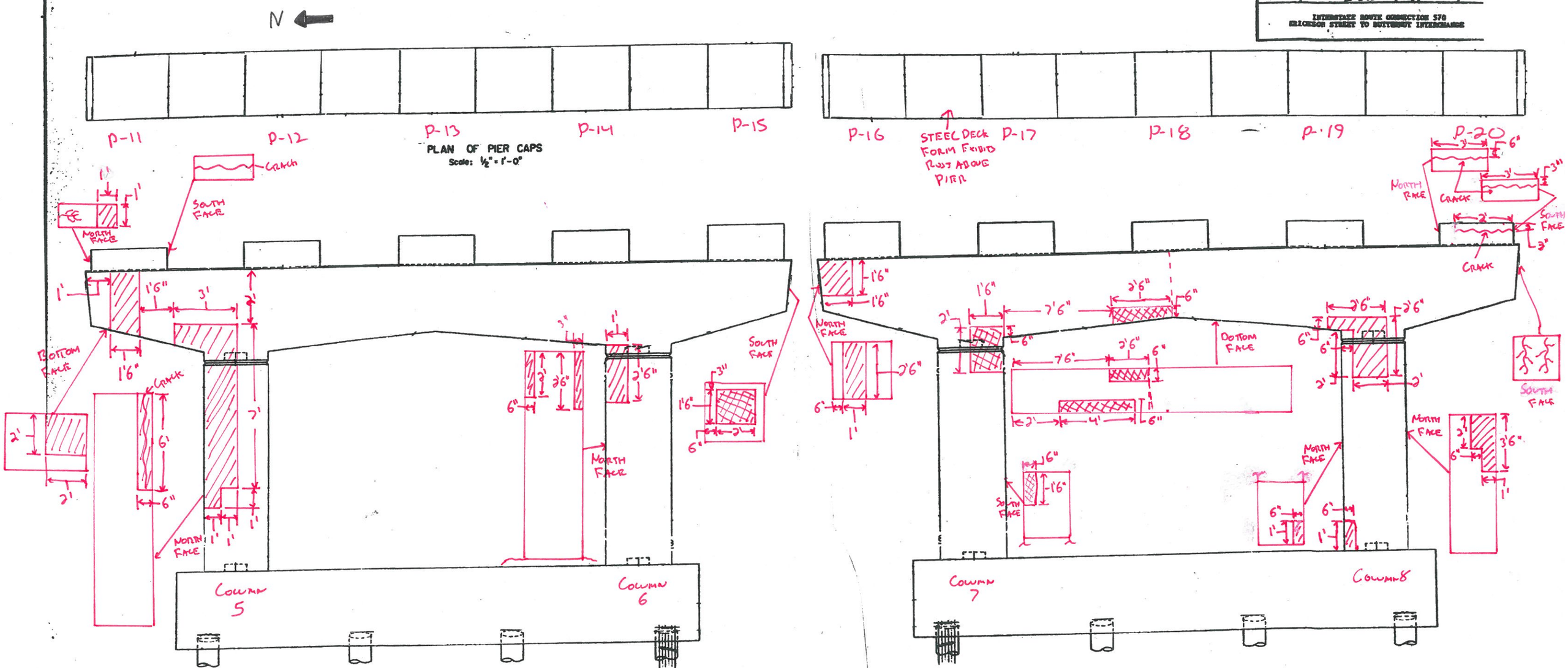

PLAN OF PIER CAPS
Scale: ½" = 1'-0"

ELEVATION OF PIERS
Scale: ½" = 1'-0"

LEGEND

- CORE LOCATION
- PHOTO LOCATION
- DELAMINATION
- SPALLING
- CRACK
- MAP CRACKING
- MOISTURE

PIER NUMBERS IN PICTURES DO NOT LINE UP WITH NUMBERS ON NOTES

BIN 1064692

PIERS WEST FACE

DRAWING NO. 11 OF 18

BEGIN

F.I.S.H. 68-4 F.I.S.H. 68-5 F.I.S.H.

FED. RD. REG. NO.	STATE	FEDERAL AID PROJECT NO.	SHEET NO.	TOTAL SHEETS
	NEW YORK	I-281-2 (108) I-690-3 (23)	275	29[illegible]

INTERSTATE ROUTE CONNECTION 570
ERICKSON STREET TO BUTTERNUT INTERCHANGE

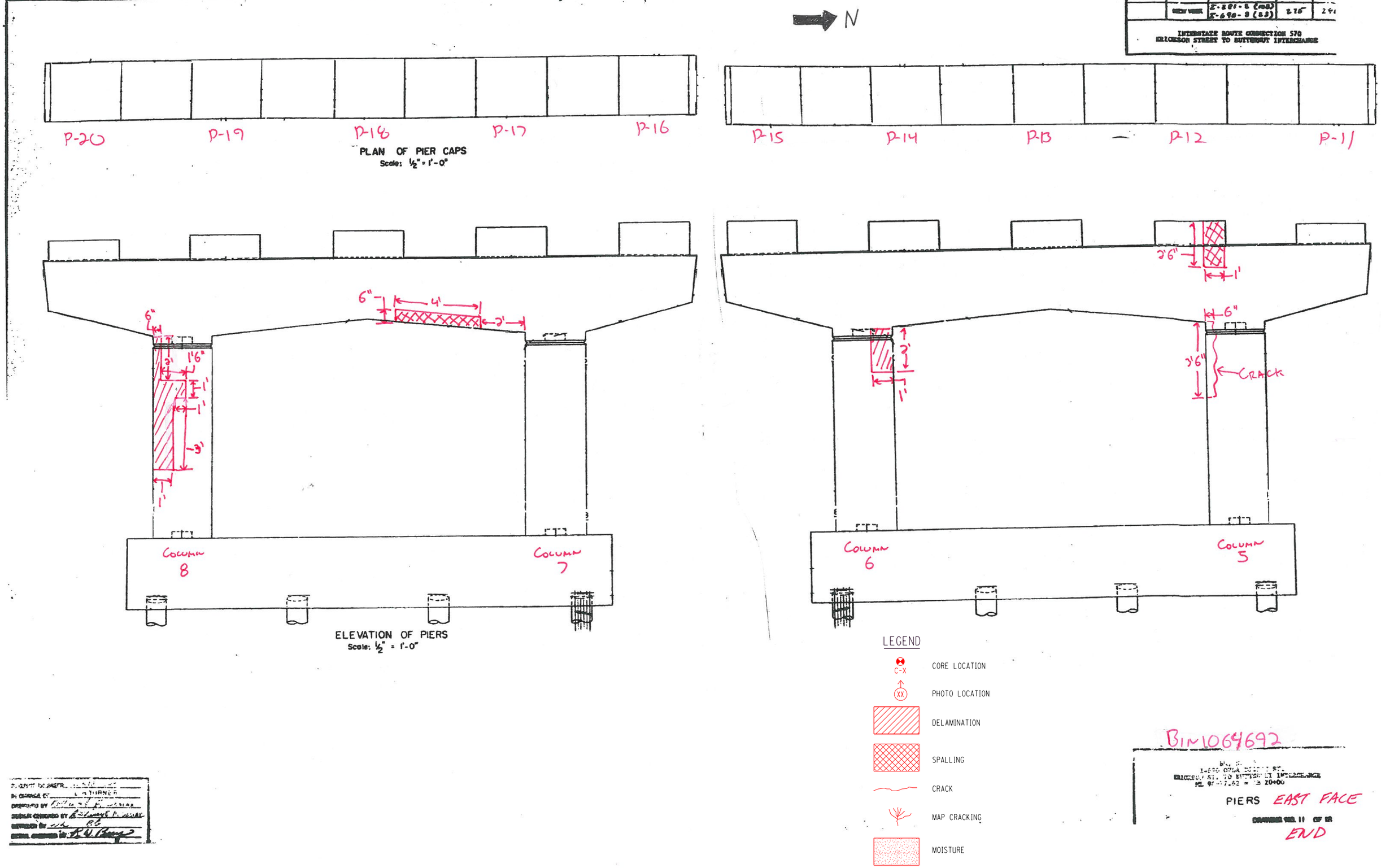

PLAN OF PIER CAPS
Scale: ½" = 1'-0"

ELEVATION OF PIERS
Scale: ½" = 1'-0"

BIN 1064692

PIERS EAST FACE

DRAWING NO. 11 OF 18

END

F.I.S.H. 68-4 F.I.S.H. 68-5 F.I.S.H. 6

FED. RD. DIST. NO.	STATE	FEDERAL AID PROJECT NO.	SHEET NO.	TOTAL SHEETS
	NEW YORK	I-281-3 (106) I-690-3 (83)	272	2

INTERSTATE ROUTE CONNECTION 570
ERIKSON STREET TO BUTTERNUT INTERCHANGE

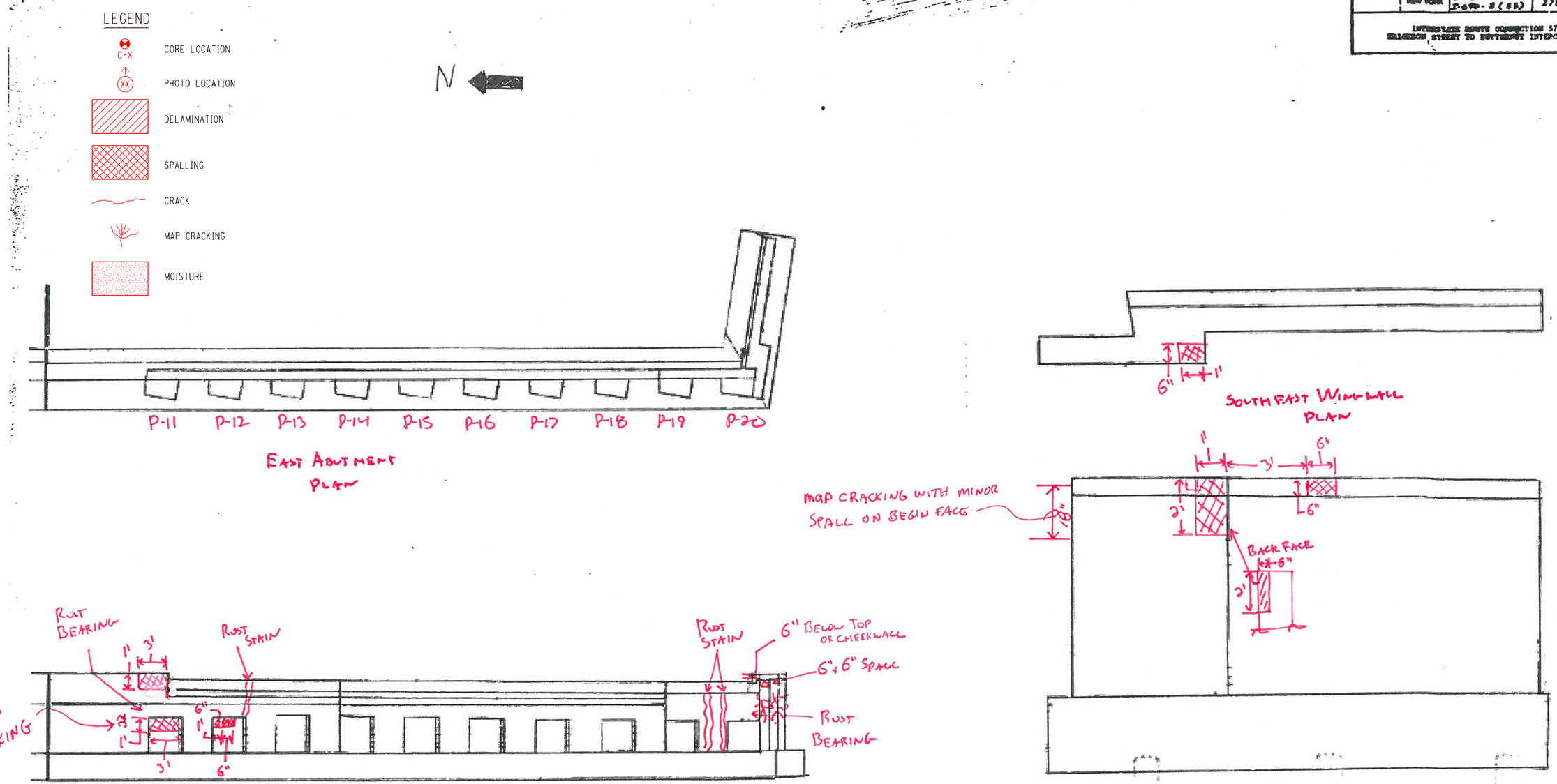

BIN 1064692

EAST ABUTMENT

PROJECT ENGINEER
IN CHARGE BY L. H. TURNER
DESIGNED BY
DESIGN CHECKED BY
DETAILED BY W. J. LEMLER
DETAIL CHECKED BY

IN-DEPTH PHOTO DOCUMENTATION

C&S Engineers, Inc.
499 Col. Eileen Collins Blvd.
Syracuse, New York 13212
Phone: (315) 455-2000
Fax: (315) 455-9667
www.cscos.com

I-690 EB over Bridge Street- BIN 1064692



DESCRIPTION: RIGHT ELEVATION – GENERAL CONFIGURATION

PHOTO 1



DESCRIPTION: WEST ABUTMENT (BEGINNING) – GENERAL CONFIGURATION

PHOTO 2

C&S Engineers, Inc.
499 Col. Eileen Collins Blvd.
Syracuse, New York 13212
Phone: (315) 455-2000
Fax: (315) 455-9667
www.cscos.com

I-690 EB over Bridge Street- BIN 1064692



DESCRIPTION: WEST ABUTMENT – PEDESTAL 1 – MAP CRACKING W/EFFLO BUILDUP & STAINS – PEDESTAL # MISLABELED

PHOTO 3



DESCRIPTION: WEST ABUTMENT – PEDESTAL 1 – STAINS ON PEDESTAL – SEEPAGE ON BACKWALL

PHOTO 4

C&S Engineers, Inc.
499 Col. Eileen Collins Blvd.
Syracuse, New York 13212
Phone: (315) 455-2000
Fax: (315) 455-9667
www.cscos.com

I-690 EB over Bridge Street- BIN 1064692



DESCRIPTION: WEST ABUTMENT – PEDESTAL 2 – TYPICAL FIXED BEARING AT ABUTMENT

PHOTO 5



DESCRIPTION: WEST ABUTMENT – PEDESTAL 9 – MAP CRACKING AND SEEPAGE ON BACKWALL – PEDESTAL # MISLABELED

PHOTO 6

C&S Engineers, Inc.
499 Col. Eileen Collins Blvd.
Syracuse, New York 13212
Phone: (315) 455-2000
Fax: (315) 455-9667
www.cscos.com

I-690 EB over Bridge Street- BIN 1064692



DESCRIPTION: WEST ABUT – BACKWALL - MAP CRACKING W/ EFFLO BUILDUP - BEHIND PED 10 – VIEWED FROM LEFT SIDE (RIGHT SIDE - FACING)

PHOTO 7



DESCRIPTION: WEST ABUTMENT – BACK WALL - BETWEEN PEDESTAL 10 & WINGWALL – CRACKING AND SPALLED CONCRETE

PHOTO 8

C&S Engineers, Inc.
499 Col. Eileen Collins Blvd.
Syracuse, New York 13212
Phone: (315) 455-2000
Fax: (315) 455-9667
www.cscos.com

I-690 EB over Bridge Street- BIN 1064692



DESCRIPTION: WEST ABUT – SOUTHWEST WING (BEGIN RIGHT), GENERAL CONF. – SPALLING, CRACKED AND DELAMINATED CONCRETE

PHOTO 9



DESCRIPTION: WEST ABUTMENT – NORTHWEST WINGWALL – GENERAL CONFIGURATION – MINOR MAP CRACKING

PHOTO 10

C&S Engineers, Inc.
499 Col. Eileen Collins Blvd.
Syracuse, New York 13212
Phone: (315) 455-2000
Fax: (315) 455-9667
www.cscos.com

I-690 EB over Bridge Street- BIN 1064692



DESCRIPTION: PIER – WEST FACE (BEGIN) – TWO CAPBEAM CONSTRUCTION (10 GIRDERS) - VIEWED FROM BEGINNING RIGHT

PHOTO 11



DESCRIPTION: COLUMN 1 – BEGIN & LEFT FACES – HOLLOWNESS, VERTICAL CRACKING, & EFFLO BUILDUP

PHOTO 12

C&S Engineers, Inc.
499 Col. Eileen Collins Blvd.
Syracuse, New York 13212
Phone: (315) 455-2000
Fax: (315) 455-9667
www.cscos.com

I-690 EB over Bridge Street- BIN 1064692



DESCRIPTION: COLUMN 2 – BEGIN & LEFT FACES – HOLLOWNESS & CRACKING IN TOP CORNERS

PHOTO 13



DESCRIPTION: LEFT CAPBEAM – PEDESTAL 5 – SPALLING IN RIGHT FASCIA FACE OF CAPBEAM – VIEWED FROM BEGIN RIGHT

PHOTO 14

C&S Engineers, Inc.
499 Col. Eileen Collins Blvd.
Syracuse, New York 13212
Phone: (315) 455-2000
Fax: (315) 455-9667
www.cscos.com

I-690 EB over Bridge Street- BIN 1064692



DESCRIPTION: LEFT CAPBEAM – PEDESTAL 1 – HOLLOWNESS IN BEGIN FACE OF CAP & LEFT FACE ALONG WITH CRACKING IN PED – FROM BEGIN LT

PHOTO 15



DESCRIPTION: PEDESTAL 1 – CRACKING IN RIGHT FACE – FROM BEGIN RIGHT

PHOTO 16

C&S Engineers, Inc.
499 Col. Eileen Collins Blvd.
Syracuse, New York 13212
Phone: (315) 455-2000
Fax: (315) 455-9667
www.cscos.com

I-690 EB over Bridge Street- BIN 1064692



DESCRIPTION: PEDESTAL 2 – END FACE – MINOR SPALLS IN PEDESTAL & CAPBEAM – FROM END LEFT

PHOTO 17



DESCRIPTION: COLUMN 3 – RIGHT CAPBEAM – SPALLS IN BEGIN TOP RT OF COLUMN & BOTTOM CORNER OF CAP – FROM BEGIN LEFT

PHOTO 18

C&S Engineers, Inc.
499 Col. Eileen Collins Blvd.
Syracuse, New York 13212
Phone: (315) 455-2000
Fax: (315) 455-9667
www.cscos.com

I-690 EB over Bridge Street- BIN 1064692



DESCRIPTION: COLUMN 4 – BEGIN & RIGHT FACES – HOLLOWNESS AT BEGIN TOP EXTENDS INTO CAP – SAME FOR END TOP RIGHT CORNER

PHOTO 19



DESCRIPTION: COLUMN 4 – END FACE – SPALLING & HOLLOWNESS -

PHOTO 20

C&S Engineers, Inc.
499 Col. Eileen Collins Blvd.
Syracuse, New York 13212
Phone: (315) 455-2000
Fax: (315) 455-9667
www.cscos.com

I-690 EB over Bridge Street- BIN 1064692



DESCRIPTION: RIGHT COLUMNS, CAPBEAM & END ABUT (GENERAL CONFIGURATION) – SPALLS & DELAMS OUTLINED – VIEWED FROM BEGIN

PHOTO 21



DESCRIPTION: RIGHT CAPBEAM – PEDESTAL 10 (RT FASCIA PED) – CRACKS & DELAMS IN BEGIN PED FACE - VIEWED FROM BEGIN RIGHT SIDE

PHOTO 22

C&S Engineers, Inc.
499 Col. Eileen Collins Blvd.
Syracuse, New York 13212
Phone: (315) 455-2000
Fax: (315) 455-9667
www.cscos.com

I-690 EB over Bridge Street- BIN 1064692



DESCRIPTION: RIGHT CAPBEAM – PEDESTAL 10 (RIGHT FASCIA PED) – CRACKS & DELAMS IN LEFT FACE – VIEWED FROM BEGIN LEFT

PHOTO 23



DESCRIPTION: RIGHT CAPBEAM – PEDESTAL 10 (RIGHT FASCIA PED) – CRACKS & DELAMS IN RT & END FACES - VIEWED FROM END RIGHT

PHOTO 24

C&S Engineers, Inc.
499 Col. Eileen Collins Blvd.
Syracuse, New York 13212
Phone: (315) 455-2000
Fax: (315) 455-9667
www.cscos.com

I-690 EB over Bridge Street- BIN 1064692



DESCRIPTION: DECK ABOVE PIER JOINT BETWEEN PEDESTALS 4 & 5 – RUSTING OF SIP FORMS – TYPICAL IN BAYS 1,2,5,6 & 7- VIEWED FROM BEGIN SIDE

PHOTO 25



DESCRIPTION: RIGHT CAPBEAM – PEDESTAL 6 - TYPICAL BEARING SET UP AT PIER – VIEWED FROM BEGIN RIGHT SIDE

PHOTO 26

C&S Engineers, Inc.
499 Col. Eileen Collins Blvd.
Syracuse, New York 13212
Phone: (315) 455-2000
Fax: (315) 455-9667
www.cscos.com

I-690 EB over Bridge Street- BIN 1064692



DESCRIPTION: JOINT ABOVE PIER – LEFT FASCIA GIRDERS – LOCALIZED SECTION LOSS AT GIRDER ENDS – VIEWED FROM END RIGHT

PHOTO 27



DESCRIPTION: JOINT ABOVE PIER – RIGHT FASCIA GIRDERS – LOCALIZED SECTION LOSS AT GIRDER ENDS – VIEWED FROM END RIGHT

PHOTO 28

C&S Engineers, Inc.
499 Col. Eileen Collins Blvd.
Syracuse, New York 13212
Phone: (315) 455-2000
Fax: (315) 455-9667
www.cscos.com

I-690 EB over Bridge Street- BIN 1064692



DESCRIPTION: LEFT FASCIA – A FEW SPALLS AND MAP CRACKING – VIEWED FROM END LEFT TOWARD BEGINNING STEM

PHOTO 29



DESCRIPTION: RIGHT FASCIA – A FEW SPALLS AND MAP CRACKING – VIEWED FROM BEGINNING RIGHT TOWARD END STEM

PHOTO 30

C&S Engineers, Inc.
499 Col. Eileen Collins Blvd.
Syracuse, New York 13212
Phone: (315) 455-2000
Fax: (315) 455-9667
www.cscos.com

I-690 EB over Bridge Street- BIN 1064692



DESCRIPTION: END LEFT WINGWALL– GENERAL CONFIGURATION – CRACKING ON RIGHT AT TOP OF BACKWALL

PHOTO 31



DESCRIPTION: END STEM – BACKWAL SPALLING ON OUTSIDE OF LEFT FASCIA GIRDER

PHOTO 32

C&S Engineers, Inc.
499 Col. Eileen Collins Blvd.
Syracuse, New York 13212
Phone: (315) 455-2000
Fax: (315) 455-9667
www.cscos.com

I-690 EB over Bridge Street- BIN 1064692



DESCRIPTION: LEFT FASCIA PEDESTAL (#1) – HORIZONTAL DELAMINATION HAS LED TO FULL WIDTH SPALL

PHOTO 33



DESCRIPTION: END STEM – PEDESTAL 6 – TYPICAL BEARING ON THE END (EAST) ABUTMENT – (PED 16 ON PLANS) – FROM LEFT FRONT

PHOTO 34

C&S Engineers, Inc.
499 Col. Eileen Collins Blvd.
Syracuse, New York 13212
Phone: (315) 455-2000
Fax: (315) 455-9667
www.cscos.com

I-690 EB over Bridge Street- BIN 1064692



DESCRIPTION: END BACKWALL BETWEEN RIGHT FASCIA GIRDER & WINGWALL – MAP CRACKING WITH EFFLORESCENCE BUILD UP

PHOTO 35



DESCRIPTION: END RIGHT CHEEKWALL – SPALLS AND CRACKING IN FRONT FACE

PHOTO 36

C&S Engineers, Inc.
499 Col. Eileen Collins Blvd.
Syracuse, New York 13212
Phone: (315) 455-2000
Fax: (315) 455-9667
www.cscos.com

I-690 EB over Bridge Street- BIN 1064692



DESCRIPTION: END RIGHT WINGWALL – GENERAL CONFIGURATION – SPALLS WITH DELAM CRACKING & MAP CRACKING

PHOTO 37



DESCRIPTION: TOP OF DECK – GENERAL CONFIGURATION – VIEWED FROM BEGINNING TOWARD END

PHOTO 38

1064692 EB

I690 EB OVER BRIDGE STREET

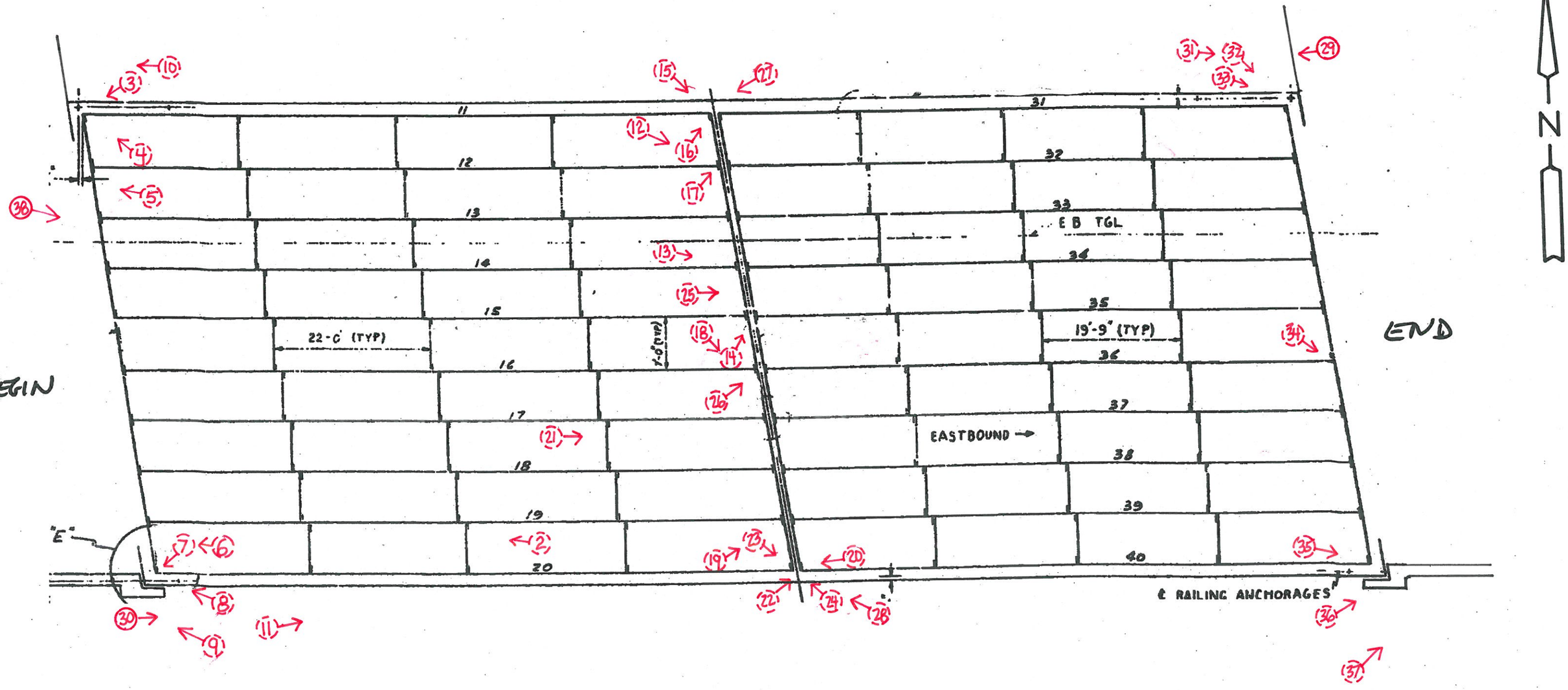

PHOTO LOCATION MAP

(1) → INDICATES PHOTO WAS TAKEN BELOW BRIDGE DECK

(1) → INDICATES PHOTO WAS TAKEN ABOVE BRIDGE DECK

ASBESTOS DOCUMENTATION

HUDSON ENVIRONMENTAL SERVICES, INC.
Mail: 22 Hudson Falls Rd., So. Glens Falls, NY 12803
Delivery: 211 Ferry Blvd., So. Glens Falls, NY 12803
Phone: 518/747-1060 Fax: 518/747-1062

ANALYTICAL TEST RESULTS
N.Y.S.D.O.H. LAB ID#11140
*ANALYZED BY N.Y.S.D.O.H. LAB ID#10898

CLIENT: NYSDOT Region 3

SAMPLE DESCRIPTION: See Below

MATRIX: Solid

LOCATION: BIN #1064692

H.E.S. #: See Below

DATE SAMPLED: 08/28/03

TIME SAMPLED: Not Specified

DATE SAMPLE RECD: 09/03/03

TYPE SAMPLE: Grab

SAMPLER: W.Kirk/NYSDOT Region 3

NOB BULK MATERIAL ANALYSIS FOR ASBESTOS

TEST METHOD:EPA-600 93/116 JULY 1993 NYSDOH ELAP 198.1 AND 198.4

HES LAB ID#: 030903U	U01	U02	U03
LAB ID#: E03	2436	2437	2438
CLIENT SAMPLE ID/DESCRIPTION	BIN #1064692-01 G-3 Span #1 Near Pier	BIN #1064692-02 G-9 Span #2 Near Pier	BIN #1064692-03 G-6 @ End Abut
COLOR	Green	Green	Green
HOMOGENEOUS(YES/NO)	Yes	Yes	Yes
ORGANIC %	49	48	48
ACID-SOLUBLE INORGANICS %	15	16	17
INSOL NON-ASBESTOS INORGANIC %	36	36	35
ASBESTOS ANALYSIS			
CHRYSOTILE %			
AMOSITE %			
CROCIDOLITE %			
OTHER AMPHIBOLE %			
TOTAL ASBESTOS % (PLM)	ND	ND	ND
ASBESTOS ANALYSIS			
TYPE OF ASBESTOS			
PERCENTAGE OF ASBESTOS (TEM)	ND	ND	ND
TOTAL	100	100	100

ND=NONE DETECTED

Approval By: [signature]

Date: 9/12/03

Hudson Environmental Services, Inc. certifies that the services provided were performed in accordance with the New York State Department of Health, Environmental Laboratory Approval Program certification manual. This report shall not be reproduced without written consent from HES, Inc. In the event of an error, HES's sole responsibility will be to perform reanalysis at its own expense. HES, Inc. assumes no other liability for damages incurred from the interpretation or use of the analysis provided.

(OVER)

HUDSON ENVIRONMENTAL SERVICES, INC.

Mail: 22 Hudson Falls Road, South Glens Falls, NY 12803
Delivery: 211 Ferry Blvd., South Glens Falls, NY 12803
Phone: 518/747-1060 Fax: 518/747-1062

CHAIN OF CUSTODY RECORD/ Lab Work Request

Client NYS Dept. of Transportation-Region 3
Client Contact/Person # Christopher Anderson
Project Location B.I.N. 1064692
Purchase Order
HES Contact William Frawley

Mail Address NYS Dept. of Transportation
333 E. Washington Street
Syracuse, NY 13202
Phone # (315) 428-4628

HES Use Only Lab ID	Sample ID / Description	Date Collected	TIME A=a.m. P=p.m.	SAMPLE TYPE C=Composite G=Grab MATRIX	C	G	# Conts.	ANALYSIS REQUIRED
030903U01	BIN 1064692-01 63		A/P	SO		X	1	Asbestos Bulk - NOB
	Span 1 near pier		A/P					
			A/P					
U02	BIN 1064692-02 64		A/P	SO		X	1	" " "
	Span 2 near pier		A/P					
			A/P					
U03	BIN 1064692-03 66		A/P	SO		X	1	" " "
	@ End Abut		A/P					

Matrix: S - Soil; SE - Sediment; SO - Solid; RL - Sludge; O - Oil; DW - Drinking Water; GW - Ground Water; SW - Surface Water; L - Leachate; A - Air; WI - Wipe; DR - Drum Solids; DL - Drum Liquids; X - Other; WW - Waste Water

Special Instructions: Bridge coating - If PLM negative, TEM confirmation on all.

Sampled by: (Signature) W. A. Kukreja	Date/Time 9/2/03	Received by: (Signature)	Date/Time 9-8-03 12:45PM
Relinquished by: (Signature)	Date/Time	Received by: (Signature)	Date/Time
Relinquished by: (Signature)	Date/Time	Received by: (Signature)	Date/Time
Dispatched by: (Signature)	Method of Shipment:		Date/Time
Received @ Laboratory: John Olsen	Date/Time 9/3/03 2:00PM	Turnaround Time: Normal	Lab Approval:

HES Use Only

Sample Integrity
1. Shipped on Ice NOTES:
2. Ambient or Chilled NOTES: 23
3. Received Broken/Leaking (Improperly Sealed) Y N NOTES:
4. Properly Preserved NOTES: Y N
5. Received Within Holding Times Y N NOTES:

COC Tape Was:
1. Present on Outer Package Y N
2. Unbroken on Outer Package Y N
3. Present on Sample Y N
4. Unbroken on Sample NOTES: Y N

COC Record Was:
1. Present upon Receipt of Samples Y N

Discrepancies Between Sample Labels and COC Record? Y N NOTES:

WHITE - Lab Copy YELLOW - Sampler Copy PINK - Generator Copy

Sep-12-03 06:33A Ved K. Kukreja, Ph.D. P.02

ASBESTOS DOCUMENTATION FROM WATTS ARCHITECTURE & ENGINEERING, INC.

(WILL REPLACE BIN FOLDER ASBESTOS REPORT UPON COMPLETION)

NEW YORK STATE
DEPARTMENT OF TRANSPORTATION
D031085 P.I.N 3501.60

LEVEL 1 LOAD RATING
B.I.N. 1064692
I-690 EB over Bridge Street

LOAD RATING SUMMARY TABLE (LOAD FACTOR)					
CONTROLLING MEMBER	**CONTROLLING PARAMETER**	**LIVE LOAD**	**LIVE LOAD TYPE**	**INVENTORY RATING**	**OPERATING RATING**
SPAN 2 INTERIOR GIRDERS (G2 TO G9)	SERVICE	HS20-44	Axle Load	HS 24.2 (43.7 TONS)	HS 40.5 (72.9 TONS)
SPAN 2 INTERIOR GIRDERS (G2 TO G9)	SERVICE	ALTERNATE MILITARY LOADING	Axle Load	1.540 (36.9 TONS)	2.573 (61.7 TONS)

DOES NOT INCLUDE FUTURE WEARING COURSE

ANALYSIS METHOD:LOAD FACTOR

RECOMMENDED POSTING AS-IS CONDITION: _____ Tons __X__ None

CALCULATED BY:

STATE OF NEW YORK JESSICA S. BAUER No. 084915 LICENSED PROFESSIONAL ENGINEER

DATE: 06/16/14

QUALITY ASSURANCE BY:

STATE OF NEW YORK PAUL F BYRNE 055928 LICENSED PROFESSIONAL ENGINEER

DATE: 06/16/14

C&S COMPANIES®

499 Col. Eileen Collins Blvd.
Syracuse, NY 13212
phone 315-455-2000
fax 315-455-9667
www.cscos.com

ENGINEERS
DESIGN BUILD
TECHNICAL RESOURCES
OPERATIONS

C&S Engineers, Inc.
Syracuse Hancock International Airport
Syracuse, NY 13212
phone 315-455-2000
fax 315-455-9667
www.cscos.com

TECHNICAL MEMORANDUM

TO: FILE (190.514.001)

FROM: JESSICA S. BAUER, P.E.
NYSPE 084915

DATE: MARCH 21, 2014

C&S PROJECT NO.: 190.514.001

RE: SEISMIC ASSESSMENT SUMMARY
NEW YORK STATE DEPARTMENT OF TRANSPORTATION
D031085; PIN 3501.60; I-81

BIN: 1064692 Seismic Assessment

This memorandum summarizes the seismic assessment conducted for BIN 1064692 as part of the Interstate 81 Project in Syracuse, NY. The purpose of the assessment is to determine if seismic retrofits are warranted at the superstructure to substructure connection, and if further seismic evaluation of the structure is required. This memorandum will give the assessment results, retrofits required and recommendations for further seismic evaluation of the structure.

ASSESSMENT PROCEDURE

The seismic assessment was performed in accordance with the FHWA Seismic Retrofitting Manual for Highway Structures: Part 1 - Bridges, January 2006. As per the referenced manual, seismic assessment was performed for both lower level and upper level earthquake ground motion. The lower level earthquake ground motion has a reasonable likelihood of occurrence within the life of the bridge (50% probability of exceedance within a 75 year bridge life). The upper level earthquake ground motion has a finite likelihood of occurrence within the life of the bridge (7% probability of exceedance within a 75 year bridge life).

Values for the spectral acceleration for the Syracuse area used in the assessment are as follows:

- Lower Level Earthquake Ground Motion for a Short Period (0.2 seconds): $S_S = 0.0251$
- Lower Level Earthquake Ground Motion for a Long Period (1.0 seconds): $S_1 = 0.0076$
- Upper Level Earthquake Ground Motion for a Short Period (0.2 seconds): $S_S = 0.139$
- Upper Level Earthquake Ground Motion for a Long Period (1.0 seconds): $S_1 = 0.047$

These values are considered constant and are the same for all seismic assessments of bridges in the Syracuse area.

The Site Class is based on the soil conditions at the bridge location. It was determined that this parameter has little effect on the results of the seismic assessment because the spectral

You created this PDF from an application that is not licensed to print to novaPDF printer (http://www.novapdf.com)

acceleration values for the Syracuse area are small. Based on this, a site class of D was used for all seismic assessments of bridges in the Syracuse area.

Bridge parameters used in the seismic assessment were retrieved from the record drawings and WinBolts data.

The seismic assessment takes into account the anticipated service life, importance, and the seismic exposure of the bridge to determine a seismic retrofit category (SRC). The SRC is then used to determine seismic evaluation methods and retrofit measures. There are four SRCs, A through D. Seismic retrofit category A is the lowest category; bridges in this category do not require retrofits or further seismic evaluation. Seismic retrofit category D is the highest category; bridges in this category requiring the most rigorous seismic evaluations and retrofits.

ASSESSMENT RESULTS

The SRC for the bridge is "**C**" for lower level earthquake ground motion and "**B**" for upper level earthquake ground motion.

RETROFITS REQUIRED

Bearing replacements and seat width improvements are not required at the abutments or pier. Additional retrofits may be required if further seismic evaluation is needed.

RECOMMENDATIONS FOR FURTHER SEISMIC EVALUATION

For the lower level earthquake ground motion, it is recommended that capacity/demand ratios for bridge components are calculated as per Section 5.4 of the referenced manual. For the upper level earthquake ground motion, it is recommended that the capacities of the bearings are checked as per Section 5.2 of the referenced manual.

Retrofit cost estimates will be provided after any further required seismic evaluations are completed.

You created this PDF from an application that is not licensed to print to novaPDF printer (http://www.novapdf.com)

ENGINEERS
DESIGN BUILD
TECHNICAL RESOURCES
OPERATIONS

C&S Companies

C&S Engineers, Inc.
Syracuse Hancock International Airport
Syracuse, NY 13212
phone 315-455-2000
fax 315-455-9667
www.cscos.com

TECHNICAL MEMORANDUM

TO: **FILE (190.514.001)**

FROM: **PAUL BYRNE, P.E.**
NYSPE 055928

DATE: **JUNE 13, 2014**

C&S PROJECT NO.: 190.514.001

RE: **NEW YORK STATE DEPARTMENT OF TRANSPORTATION**
D031085; PIN 3501.60; I-81 Opportunities, BIN 1064692 Fatigue Evaluation

---

This memorandum documents a fatigue evaluation conducted for the existing Interstate 81 Viaduct Project. Existing structures with AASHTO Category D, E, and E' fatigue-prone details require 100% hands-on inspection unless proven to be exempt. The purpose of the evaluation is to assess the remaining life of fatigue-prone components.

EVALUATION PROCEDURES

The fatigue evaluation was performed in accordance with the AASHTO Guide Specification for Fatigue Evaluations of Existing Steel Bridges, 1990. Fatigue-prone welds identified in the biennial inspection reports were located on record drawings and confirmed visually in the field. Additional information concerning fatigue-prone welds located in BIN folders was also obtained and reviewed prior to inspection.

EVALUATION RESULTS

The results of the fatigue evaluation of the existing bridge are shown below. The remaining safe fatigue life of the Span 1 exterior fatigue components have been **exhausted**.

Fatigue Detail Location	Remaining Safe Fatigue Life (Years)	Remaining Mean Fatigue Life (Years)
Span 1, Exterior Girders, End of Bottom Flange Cover Plate	-8.00	63.42
Span 1, Interior Girders, End of Bottom Flange Cover Plate	5.19	128.35
Span 2, Exterior Girders, End of Bottom Flange Cover Plate	13.29	168.19
Span 2, Interior Girders, End of Bottom Flange Cover Plate	40.18	300.51

E. Recommendations:

The purpose of this deck evaluation is to document and determine existing conditions of the deck. It will be used as a tool for developing the scope of work and cost estimates for the development and comparison of alternatives for the overall project.

The total damaged area is approximately 24% of the total deck area. Due to the age, condition and high chloride-ion content of the bridge deck concrete, the bridge deck should be rehabilitated or replaced to meet current standards and to mitigate excessive future maintenance costs.

Option 1 – Scarify and Bridge Deck Overlay
The maximum service life this option would provide is 25 years. The design life of this project is 30 years (ETC +30). This option does not meet the project objectives of obtaining 30+ years of service life.

Option 2 – Bridge Deck Rehabilitation with 100% Deep Removal
This option will involve partial depth reconstruction with top mat rebar exposure of the entire bridge deck to remove chloride contaminated concrete (100% deep removal). The existing bridge deck thickness is 9 ¼" with 3" of concrete cover over the top mat of reinforcing. The proposed partial depth reconstruction will include the addition of ¼" of concrete to provide the standard 9 ½" bridge deck thickness. The existing top mat of reinforcing bars will be removed and replaced to accommodate the standard 3" cover of concrete. The existing non-conforming bridge railing will be removed and replaced with single-slope concrete barrier. The existing armor bridge joints will be replaced with armorless bridge joints. The Level 1 Load Rating for the final condition was found to be acceptable. This option would provide a service life of 35 years to the bridge deck. The construction cost of this option is $ 0.723 million.

Option 3 – Bridge Deck Replacement with Cast-In-Place Concrete

This option will involve the complete demolition of the existing bridge deck, 2-rail bridge railing, and armor bridge joints. The bridge deck will be replaced with a new concrete deck, new single-slope concrete barrier and new armorless bridge joints. The new deck would be 9½" standard thickness as compared to the 9 ¼" existing thickness. The Level 1 Load Rating for the final condition was found to be acceptable. This option would provide a service life of 40 years to the bridge deck. The construction cost of this option is $0.981 million.

Option 4 – Bridge Deck Replacement with Pre-cast Concrete Deck Panels

This option will have the highest construction cost of all of the options however; traffic control costs may be lower due to reduced construction time. Comparison of accelerated construction to conventional construction is beyond the scope of work for this project at this time.

IN DEPTH INSPECTION REPORT

D031085 P.I.N. 3501.60

ELEMENT SPECIFIC BRIDGE WORK

B.I.N. 1069090

TEAM LEADER Bruce Opalka, P.E. 60413
NYSPE LICENSE #

ASSISTANT TEAM LEADER Mike Rode

ASSISTANT TEAM LEADER Chuck Brooks

FEATURE CARRIED I-481 SB

FEATURE CROSSED I-81 NB & SB

DATE FIELD WORK BEGAN January 30, 2014

DATE FIELD WORK COMPLETED January 31, 2014

TABLE OF CONTENTS

- TP 349 & 350
- BRIDGE CONDITION RATING
- IN-DEPTH CONDITION DOCUMENTATION
- IN-DEPTH PHOTO DOCUMENTATION
- ASBESTOS ASSESSMENT, DETAILS & LOCATIONS
- BRIDGE DECK EVALUATION

TP 349 & TP 350

BRIDGE ELEMENT RATINGS

Inspection Date: 9/19/2011 RC: 33 BIN: 1069090

Bridge Ratings

Carried: I481 WB TO I81 SB Crossed: 81I 81I33032013 CheckValue: 1,754,605,434

Inspection Agency: 10 - NYSDOT Type of Inspection: 1 - BIENNIAL
GTMS: 402 -- Steel Continuous - Stringer/Multi-Beam or Girder
POSTINGS: See Gen Rec Page 1 for Postings at time of inspection.
Further Investigation Needed: No
State Highway Number: 76-2 Milepoint: 0 AADT/Yr: 1050 / 1979
Orientation: 2 - Northeast Political Unit: 2055 - City of SYRACUSE Year Built: 1980
Total Spans: 5 Ramp Bridge Attached To Span: NA BIN: NA
General Recommendation: 4 Computed Condition Rating: 4.764

Abutment Ratings:	Beg Abut	End Abut
Joint with Deck	5	4
Bearings, Bolts, Pads	6	6
Seats and Pedestals	7	7
Backwall	5	5
Stem (Breastwall)	6	5
Erosion or Scour	5	4
Footings	9	9
Piles	8	8
Recommendation	6	5

Wingwall Ratings:	Beg Abut	End Abut
Walls	5	5
Footings	9	9
Erosion or Scour	6	6
Piles	8	8

Channel Ratings:	Channel
Stream Alignment	8
Erosion and Scour	8
Waterway Opening	8
Bank Protection	8

Approach Ratings:	Approaches
Drainage	6
Embankment	6
Settlement	5
Erosion	5
Pavement	4
Guide Railing	5

Number of Flags Issued:

RED: 0 Yellow: 0 Safety: 0

Vulnerability Reviews Recommended: 1=Yes, 2=No, 3=NA, X=NotActive

Hydraulic: 3	Overload: X	Steel: 1
Collision: 2	Concrete: X	Seismic: X

Inspector's Signature: CheckValue: 1,754,605,434 Date: 9/19/2011

David Hann,PE () (Inspector ID:3000055)

Signed copy of this inspection report is available in the appropriate NYSDOT Regional Office

Reviewed By: Date: 11/18/2011

James R. Manning,PE () (QC ID:3000023)

Signed copy of this inspection report is available in the appropriate NYSDOT Regional Office

Inspection Date: 9/19/2011 RC: 33 BIN: 1069090

Span Ratings

Carried: I481 WB TO I81 SB Crossed: 81I 81I33032013 CheckValue: 1,754,605,434

Deck Element Ratings:	001	002	003	004	005
Wearing Surface	4	4	4	4	4
Curbs	3	3	3	3	3
Sidewalks, Fascias	5	5	5	5	4
Railings, Parapets	5	5	5	5	5
Scuppers	8	8	8	8	8
Gratings	8	8	8	8	8
Median	8	8	8	8	8
Mono Deck Surface	4	5	4	5	5

Superstructure Ratings:	001	002	003	004	005
Structural Deck	5	5	5	5	5
Primary Members	4	4	4	4	4
Secondary Members	6	6	6	6	6
Paint	3	3	3	3	3
Joints	8	8	4	8	8
Recommendation	5	5	4	4	4

Pier Ratings:	001	002	003	004	005
Bearings, Bolts, Pads	7	5	5	5	8
Pedestals	6	5	5	5	8
Top of Cap or Beam	6	6	6	6	8
Stem Solid Pier	8	8	8	8	8
Cap Beam	6	5	5	6	8
Pier Columns	6	6	5	6	8
Footings	9	9	9	9	8
Erosion or Scour	6	6	6	6	8
Piles	8	8	8	8	8
Recommendation	6	5	6	5	8

Utility Ratings:	001	002	003	004	005
Lighting	8	8	8	8	8
Sign Structure	8	8	8	8	8
Utilities and Support	8	8	8	8	8

Field Notes:

Field Date	Arrival	Departure	Temp (C)	Temp (F)	Weather Conditions
8/30/2011	2:00:00 PM	4:30:00 PM		80	Sunny
9/19/2011	8:00:00 AM	1:00:00 PM		65	Sunny

IN-DEPTH CONDITION DOCUMENTATION

IN DEPTH INSPECTION REPORT

BIN 1069090

- **In-Depth Condition:**

Visual Inspection: Miscellaneous concrete repairs were made to the abutments and piers in 2005 under contract D259742.

Cracks, spalls, and other field observations are shown on the plans. Below is a brief summary of conditions for each feature.

Superstructure

- **Deck –** See Bridge Deck Evaluation Report.
- **Steel –** See Structural Steel Inspection Summary.
- **Bearings –** All expansion bearings (spherical) appear in good working order, however, they are closer to the right keeper plate than the left. This is the inside side of the curved girder. There is some minor rust on a few fascia bearings. The fixed bearings (spherical - piers 2 & 4) also appear in good working order with minor rust buildup on them.

Substructure

- **West Abutment (Begin) –** Map cracking and moisture buildup behind pedestal 1. Some cracking with shallow spalling for 3' high between pedestals 2 & 3 in the backwall. Light delaminations in same area between pedestals 3 & 4. Thin full height crack behind pedestal 4. Right cheek wall is spalled to 6" deep at the top front face with hollowness on the outside wall 6" W by 4' H.

  Pier #1 – Pier is overall in good condition except for a single for 2' H by 3' W area on the beginning face which has a minor spall with swallow delamination around it.

  Pier #2 – Seepage from road splash on the low side (right) has led to staining of the concrete with a cracked fascia pedestal and spot areas of delaminations on the bottom side of the hammerhead capbeam.

Minor spalls with localized delaminations on pedestals 2,3, & 4 and just below on the capbeam on both faces.

Pier #3 – Pier #3 is the only pier with a joint and there is extensive map cracking with efflorescence build up on the pedestals, capbeam, and column. Some minor cracking with localized delamination below pedestal 4, beginning face, and on and below pedestal 2 & 3 on the end face.

Pier #4 – The pier is basically sound and solid.

East Abutment (End) – There is heavy staining with efflorescence build up which runs down the backwall over the pedestals and down the stem at pedestals 1,2, & 5. A single spall measuring 18" W by 18" H by 8" deep in top right corner of backwall. Mapcracking on abutment from pedestal 1 to pedestal 2 and between pedestals 3 & 4.

STRUCTURAL STEEL INSPECTION SUMMARY

BIN 1069090

Special Emphasis Inspection Required
Non-Redundant/Fracture Critical Members – No
Pin and Hangers – No
Fatigue-Prone Welds – Yes
Non-Categorized Fatigue-Prone Details – No
Other (Specified in Text) – No

Special Emphasis Details:
100% hands on inspection performed – no cracks found.

Overall Steel Condition:

Paint: Paint is peeling away along bottom flange edges of all girders, also the same problem with web faces and outside top of bottom flanges of fascia girders. Paint has completely failed below both bridge ends and pier #3 joints where considerable section loss is beginning to occur.

Section Loss:

For span #3 @ G-1 in the web behind the bearing stiffener there was a reading of 0.22" for a 0.375" plate for the 2013 Biennial inspection which equates to 40% for the bottom 12" which is satisfactory at this time. Our inspection also concludes that above the bottom 12" to 18" there is loss to 25% and above the 18" the loss is 10% for full height. The outside bearing stiffener in the same location, the 2013 Biennial inspection states a reading of 0.35" out of 1.5" plate thickness, however, a closer inspection of the plans indicate the thickness to be 1.0" for a loss of 65% loss for the bottom 6". For G-5 there is localized web loss before the bearing stiffener on the bottom for 5" high by 16" long of 25%.
For span #4 at the beginning, on the G-1 web before the bearing stiffener, the 2013 Biennial inspection indicates 75% loss for the bottom 12". Our inspection concludes above the 12" to 24" the web loss is 50% and above that an average loss of 10% is adequate.
For both spans #3 & #4 there is additional +/- 5% loss full height in webs of all girders behind the stiffeners below the pier #3 joint. Also, cross bracing in all bays have loss in the range of +/- 5% in all members of the cross bracing.
For span #5 the 2013 biennial inspection indicates web loss before the G-5 bearing stiffener at the bottom in an area of 12" wide by 12" high with a loss of 75%. Our inspection concludes the height can be increased to 14" with the 75% more than adequate at this time. In front of this loss a 6" high by 8' long, we say 10' boxed area has 45% web loss. Past the bearing stiffener in the web at the bottom there is a 1" by 3" hole and is knife thin around it. Above this hole we have 20% loss for full height of the web.
Spot localized losses throughout bridge particularly on fascia girders due to paint failure.

1069090

D95042

FED. ROAD REG. NO.	STATE	FEDERAL AID PROJECT NO.	SHEET NO.	TOTAL SHEETS
1	N.Y.	I-IU-481-2(74) I-IU-81-2(128)	265	571

INTERSTATE ROUTE CONNECTION 571
FOREST INTERCHANGE - JAMESVILLE
ONONDAGA COUNTY

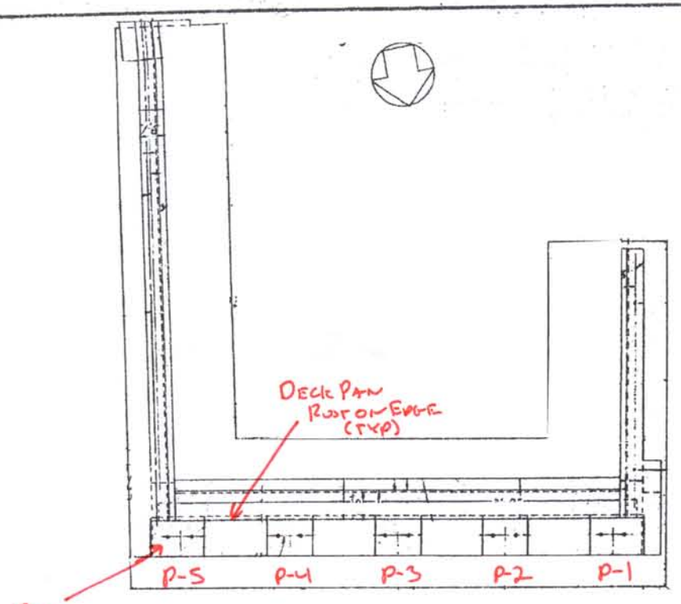

PLAN
Scale: 4"=1'-0"

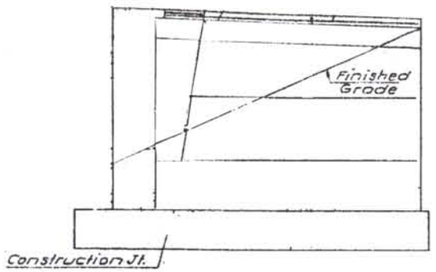

N.W. WINGWALL ELEVATION
Scale: 4"=1'-0"

NOTES:
- CONCRETE APPEARS TO BE IN GOOD CONDITION WITH ONLY MINOR ISOLATED DELAMINATION AND CRACKING UNLESS NOTED.
- BEARINGS HAVE TYPICAL RUST UNLESS NOTED
- DECK PANS HAVE MINOR RUST ON EDGES

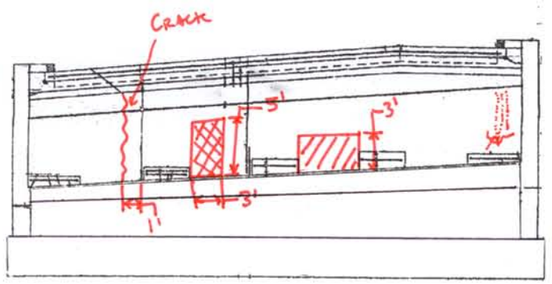

ELEVATION
Scale: 4"=1'-0"

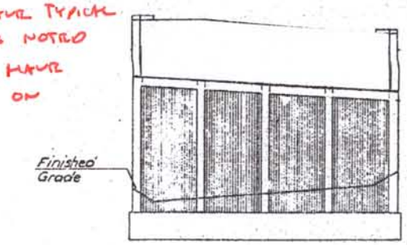

AESTHETIC TREATMENT AT ABUTMENTS
Scale: 1/8"=1'-0"

LEGEND
- C-X — CORE LOCATION
- XX — PHOTO LOCATION
- DELAMINATION
- SPALLING
- CRACK
- MAP CRACKING
- MOISTURE

BIN 1069090

BRIDGE NO. 1
CONNECTOR "H" OVER
CONNECTOR "G" AND I-81
WEST ABUTMENT

Prepared and recommended
GOODKIND & O'DEA, INC.
Consulting Engineers
Date 12/1/75

DWG. NO.	SCALE	DATE	
10	As noted	Nov. 1975	GOODKIND & O'DEA, INC. CONSULTING ENGINEERS

265

D95042

FED. ROAD REG. NO.	STATE	FEDERAL AID PROJECT NO.	SHEET NO.	TOTAL SHEETS
1	N.Y.	~~I-IQ-481-2(74)~~ I-UI-81-2(125)	266	571

INTERSTATE ROUTE CONNECTION 571
FOREST INTERCHANGE - JAMESVILLE
ONONDAGA COUNTY

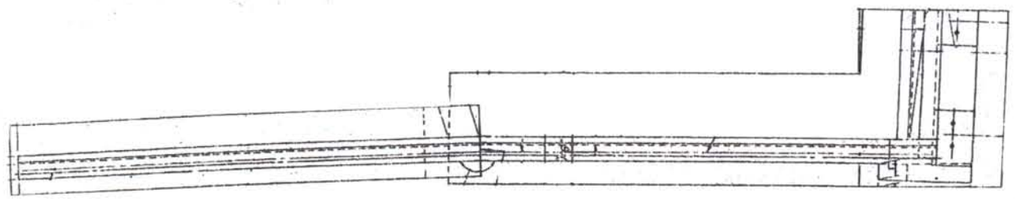

PLAN
Scale: 1/4" = 1'-0"

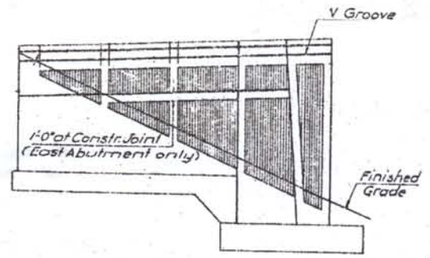

Notes:
- Concrete Appears in Good Condition with only Minor Isolated Delamination and Cracking Unless noted

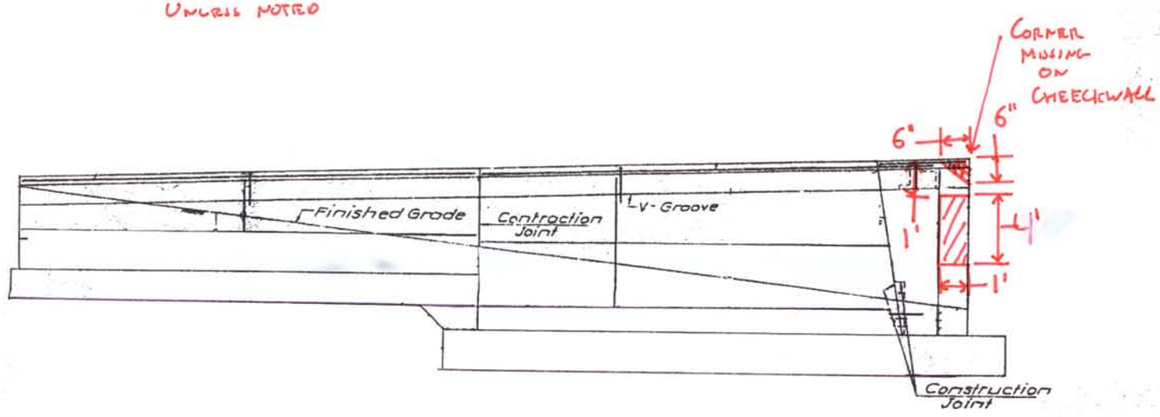

ELEVATION
Scale: 1/4" = 1'-0"

LEGEND
- CORE LOCATION
- PHOTO LOCATION
- DELAMINATION
- SPALLING
- CRACK
- MAP CRACKING
- MOISTURE

BIN 1069090

BRIDGE NO. 1
CONNECTOR "H" OVER
CONNECTOR "G" AND I-81
SOUTHWEST WINGWALL

Prepared and recommended
GOODKIND & O'DEA, INC.
Date 12/1/75
Consulting Engineers

DWG. NO.	SCALE	DATE	
11	As noted	Nov. 1975	GOODKIND & O'DEA, INC. CONSULTING ENGINEERS

Detailed by A. Cerrato, Jr.
Detail Checked by [illegible]

266

(2)

1069090

D95042

FED. ROAD REG. NO.	STATE	FEDERAL AID PROJECT NO.	SHEET NO.	TOTAL SHEETS
1	N.Y.	I-IU-481-2(129)	273	571

INTERSTATE ROUTE CONNECTION 571
FOREST INTERCHANGE - JAMESVILLE
ONONDAGA COUNTY

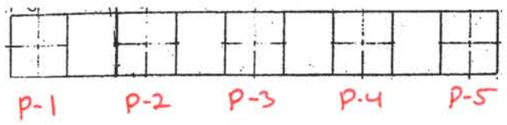

CAP PLAN
Scale: 4"=1'0"

Notes:
- Concrete Appears to Be in Good Condition with only Minor Isolated Delamination and Cracking Areas Noted.
- Bearings Have Minor Typical Rust.
- Deck Pans Appear in Good Condition Above Pier

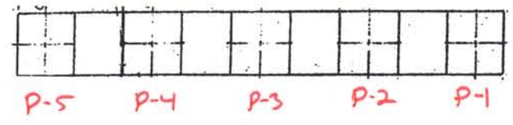

CAP PLAN
Scale: 4"=1'0"

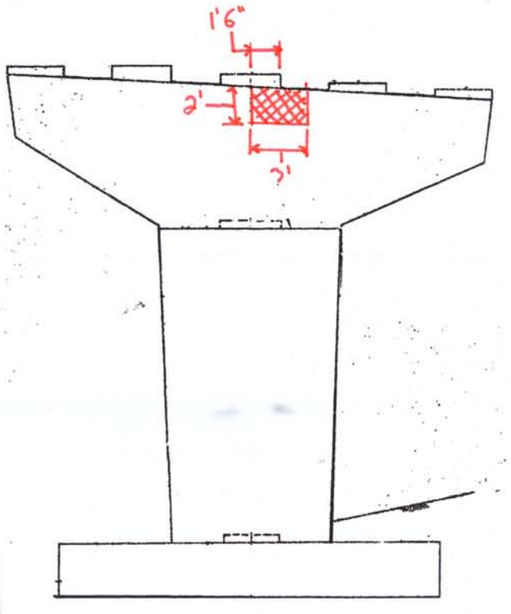

WEST FACE

ELEVATION
Scale: 4"=1'0"

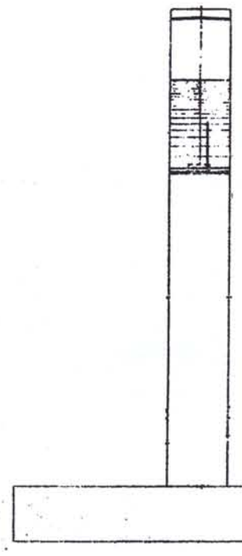

NORTH FACE

END ELEVATION
Scale: 4"=1'0"

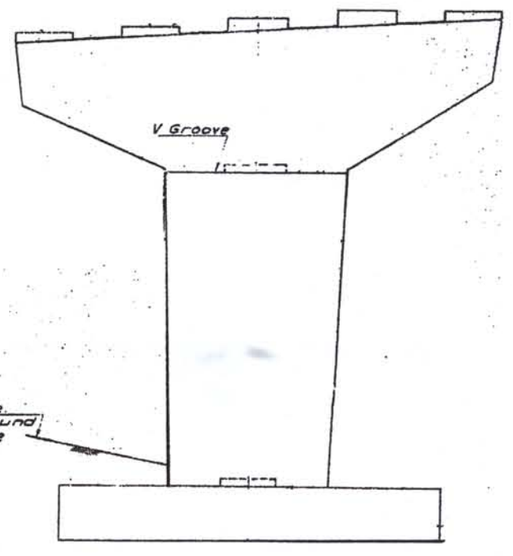

EAST FACE

LEGEND
- CORE LOCATION
- PHOTO LOCATION
- DELAMINATION
- SPALLING
- CRACK
- MAP CRACKING
- WEEPLINE

BIN 1069090
BRIDGE NO. 1
CONNECTOR "H" OVER
CONNECTOR "G" AND I-81
PIER 1

Prepared and recommended for approval: GOODKIND & O'DEA, INC. Consulting Engineers
Date 12/1/75

DWG. NO.	SCALE	DATE	GOODKIND & O'DEA, INC. CONSULTING ENGINEERS
18	As noted	Nov. 1975	

In Charge of Design: W.H. Kennedy
Design Checked by: A. Bilotti
Detailed by: E.V. Fisk
Detail Checked by: D. Patterson

D95042

FED. ROAD REG. NO.	STATE	FEDERAL AID PROJECT NO.	SHEET NO.	TOTAL SHEETS
1	N.Y.	I-IG-481-2(74) I-III-81-2(128)	274	571

INTERSTATE ROUTE CONNECTION 571
FOREST INTERCHANGE - JAMESVILLE
ONONDAGA COUNTY

P-1 P-2 P-3 P-4 P-5

P-5 P-4 P-3 P-2 P-1

CAP PLAN
Scale: 4" = 1'-0"

NOTES:
- BEARINGS HAVE ONLY MINOR TYPICAL RUST.
- DECK PATS APPEAR TO BE IN GOOD SHAPE ABOVE PIER.

CAP PLAN
Scale: 4" = 1'-0"

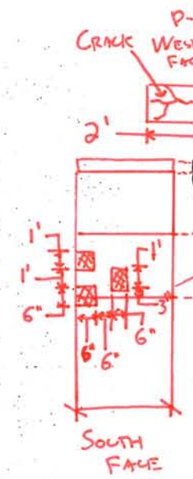

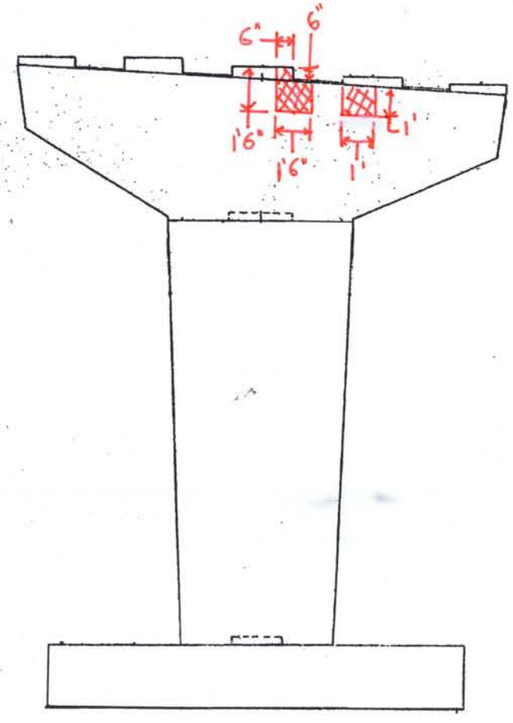

WEST FACE

ELEVATION
Scale: 1/4" = 1'-0"



NORTH FACE

END ELEVATION
Scale: 1/4" = 1'-0"

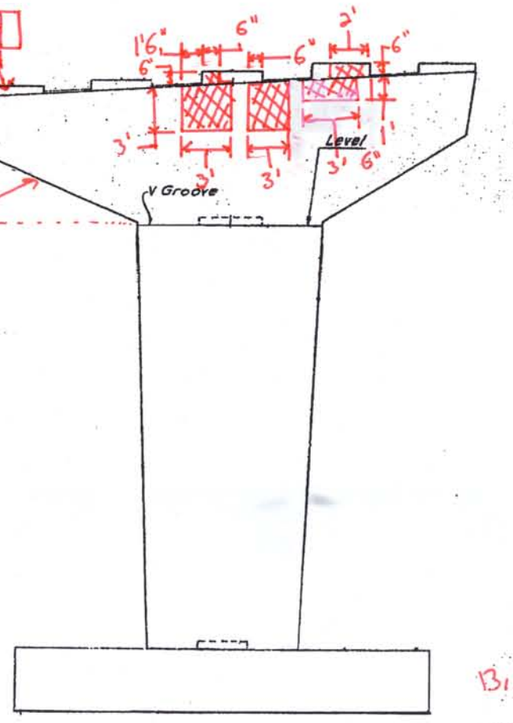

EAST FACE

LEGEND
- CORE LOCATION
- PHOTO LOCATION
- DELAMINATION
- SPALLING
- CRACK
- MAP CRACKING
- WEEPS/RUST

Prepared and recommended
GOODKIND & O'DEA, INC.
Consulting Engineers
Date 12/1/75

DWG. NO.	SCALE	DATE	
19	As noted	Nov. 1975	GOODKIND & O'DEA, INC. CONSULTING ENGINEERS

BIN 1069090
BRIDGE NO. 1
CONNECTOR "H" OVER
CONNECTOR "G" AND I-81
PIER 2

(4)

1069090

D95042

FED. ROAD REG. NO.	STATE	FEDERAL AID PROJECT NO.	SHEET NO.	TOTAL SHEETS
1	N.Y.	I-IQ-481-2(74) I-IU-81-2(128)	275	571

INTERSTATE ROUTE CONNECTION 571
FOREST INTERCHANGE – JAMESVILLE
ONONDAGA COUNTY

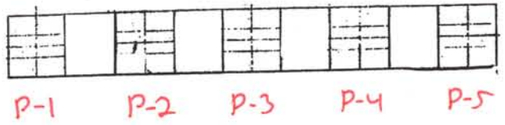

CAP PLAN
Scale: 1/4"=1'0"

NOTES:
- BEARINGS HAVE TRACK RUST

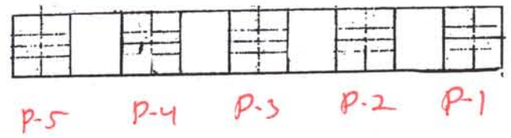

CAP PLAN
Scale: 1/4"=1'0"

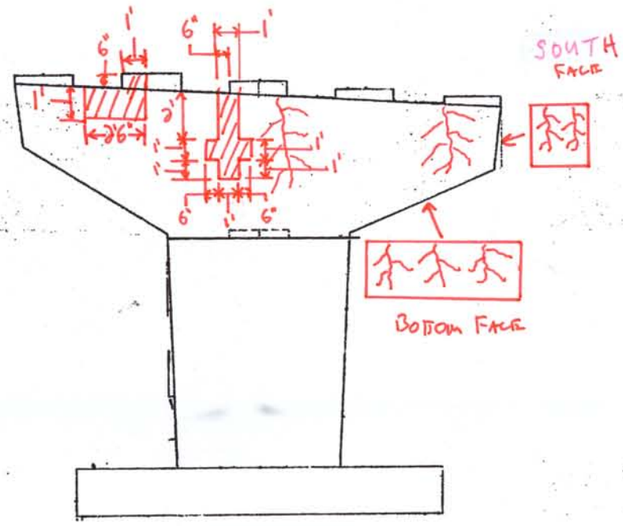

WEST FACE
ELEVATION
Scale: 1/4"=1'0"

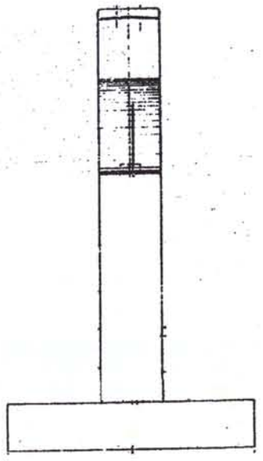

NORTH FACE
END ELEVATION
Scale: 1/4"=1'0"

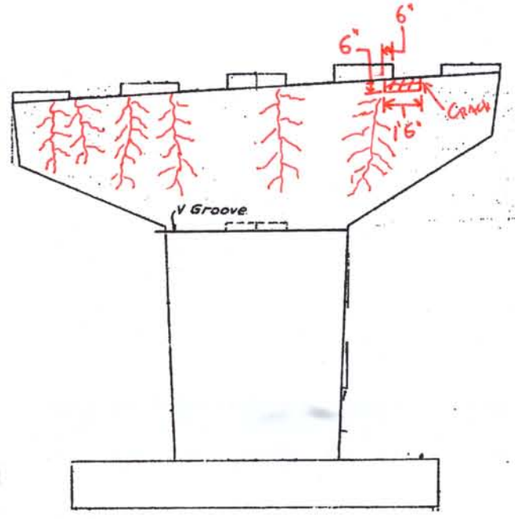

EAST FACE

LEGEND
- CORE LOCATION
- PHOTO LOCATION
- DELAMINATION
- SPALLING
- CRACK
- MAP CRACKING
- WEATHERING

BIN 1069090
BRIDGE NO. 1
CONNECTOR "H" OVER
CONNECTOR "G" AND I-81
PIER 3

Prepared and recommended
GOODKIND & O'DEA, INC.
Consulting Engineers
Date 12/1/75

DWG. NO.	SCALE	DATE
20	As noted	Nov. 1975

GOODKIND & O'DEA, INC.
CONSULTING ENGINEERS

275

(5)

D95042

FED. ROAD REG. NO.	STATE	FEDERAL AID PROJECT NO.	SHEET NO.	TOTAL SHEETS
1	N.Y.	I-IQ-481-2(74) I-III-81-2(126)	276	571

INTERSTATE ROUTE CONNECTION 571
FOREST INTERCHANGE - JAMESVILLE
ONONDAGA COUNTY

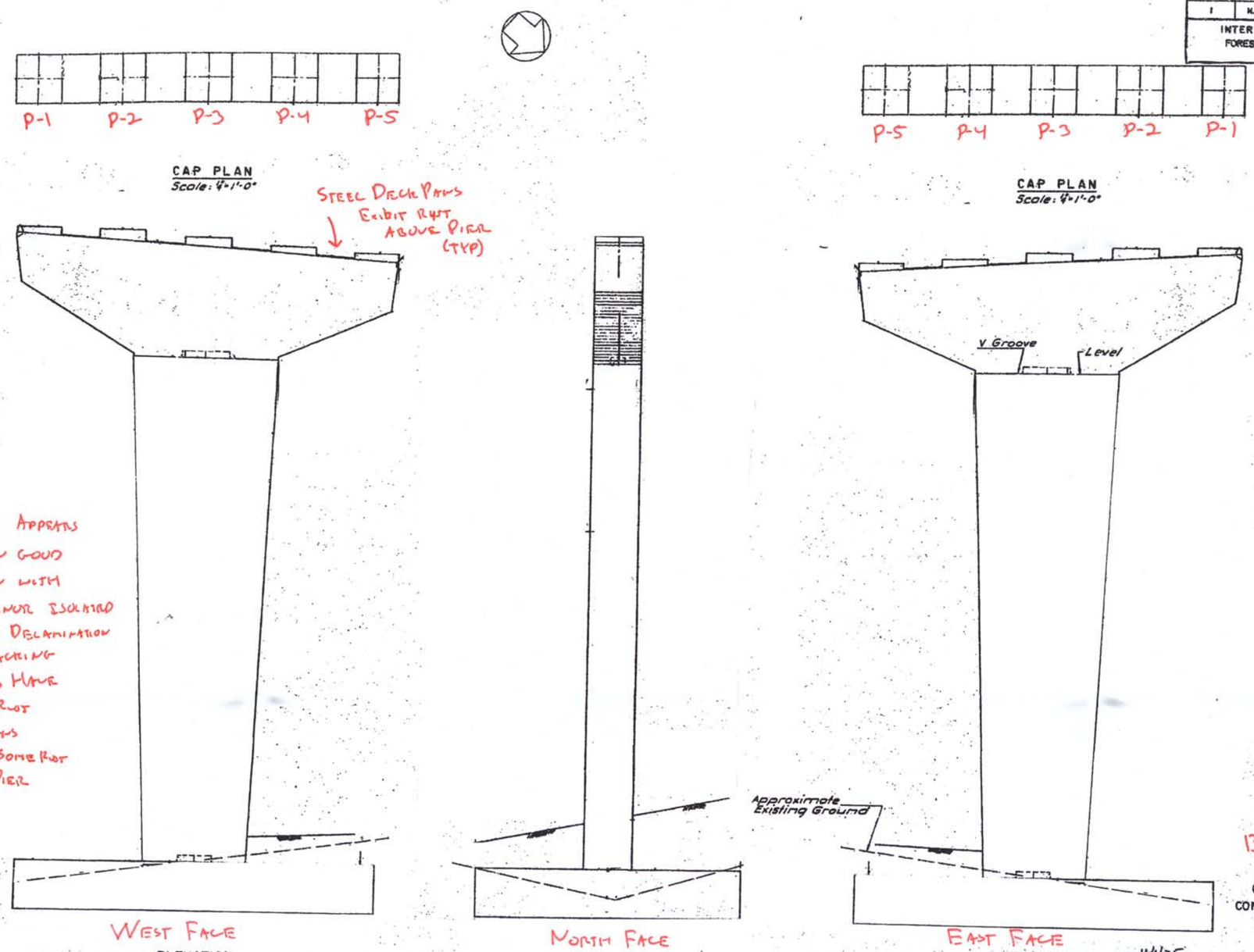

NOTES:
- CONCRETE APPEARS TO BE IN GOOD CONDITION WITH ONLY MINOR ISOLATED AREAS OF DELAMINATION AND CRACKING
- BEARINGS HAVE TYPICAL RUST
- DECK PANS EXHIBIT SOME RUST ABOVE PIER

LEGEND
- CORE LOCATION
- PHOTO LOCATION
- DELAMINATION
- SPALLING
- CRACK
- MAP CRACKING
- MOISTURE

BIN 1069090

BRIDGE NO. 1
CONNECTOR "H" OVER
CONNECTOR "G" AND I-81
PIER 4

Prepared and recommended
GOODKIND & O'DEA, INC.
Date 12/1/75
Consulting Engineers

DWG. NO.	SCALE	DATE	
21	As noted	Nov. 1975	GOODKIND & O'DEA, INC. CONSULTING ENGINEERS

276

(6)

1069090

D95042

FED. ROAD REG. NO.	STATE	FEDERAL AID PROJECT NO.	SHEET NO.	TOTAL SHEETS
1	N.Y.	I-IG-481-2(74) I-UI-81-2(128)	269	571

INTERSTATE ROUTE CONNECTION 571
FOREST INTERCHANGE - JAMESVILLE
ONONDAGA COUNTY

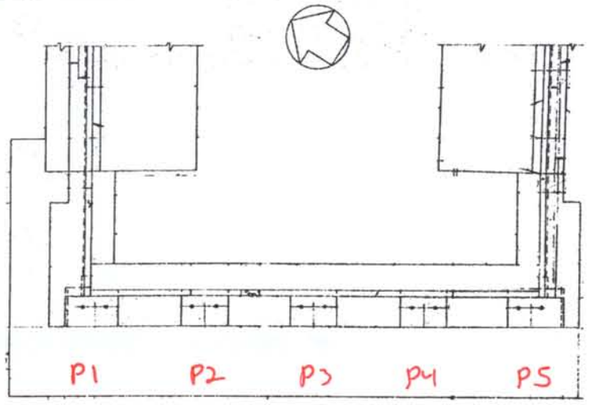

PLAN
Scale: 1/4"=1'-0"

LEGEND
- CORE LOCATION
- PHOTO LOCATION
- DELAMINATION
- SPALLING
- CRACK
- MAP CRACKING
- MOISTURE

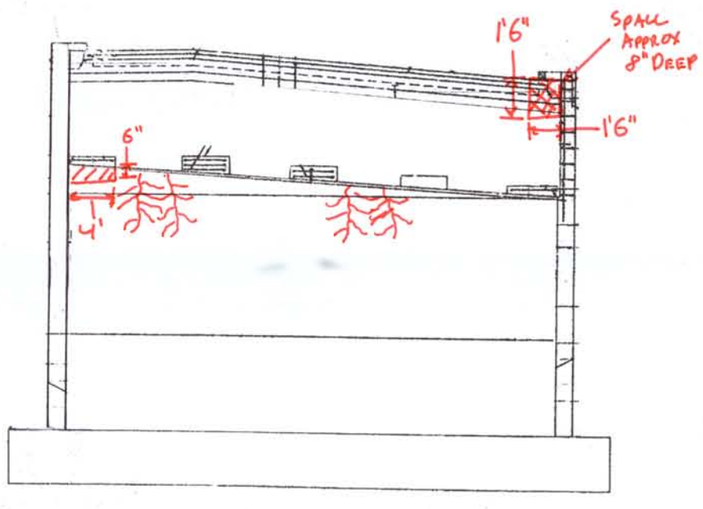

ELEVATION
Scale: 1/4"=1'-0"

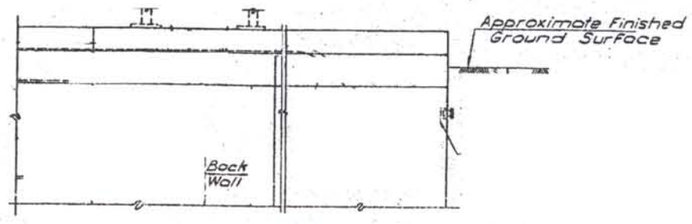

ELEVATION AT ABUTMENT
Not to Scale

NOTES:
- CONCRETE APPEARS TO BE IN GOOD CONDITION WITH ONLY MINOR ISOLATED DELAMINATION AND CRACKING UNLESS NOTED
- BEARINGS HAVE TYPICAL RUST
- DECK PANS APPEAR TO BE IN GOOD CONDITION WITH MINOR RUST.

BIN 1069090

BRIDGE NO. 1
CONNECTOR "H" OVER
CONNECTOR "G" AND I-81
EAST ABUTMENT

In Charge of: [illegible]
Designed by: B.D. Crisbell
Design Checked by: H.H. Valentine
Detailed by: L. Volkoff
Detail Checked by: [illegible]

Prepared and recommended
GOODKIND & O'DEA, INC.
Date 12/1/75
Consulting Engineers

DWG. NO.	SCALE	DATE	
14	As noted	Nov. 1975	GOODKIND & O'DEA, INC. CONSULTING ENGINEERS

7

D95042

FED. ROAD DIV. NO.	STATE	FEDERAL AID PROJECT NO.	SHEET NO.	TOTAL SHEETS
1	N.Y.	I-TU-481-2(743) I-III-81-2(128)	270	571

INTERSTATE ROUTE CONNECTION 571
FOREST INTERCHANGE - JAMESVILLE
ONONDAGA COUNTY

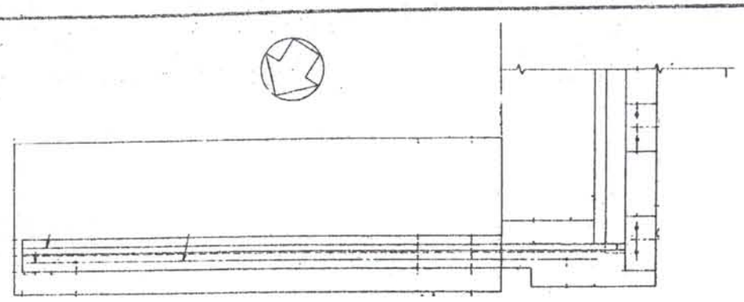

PLAN

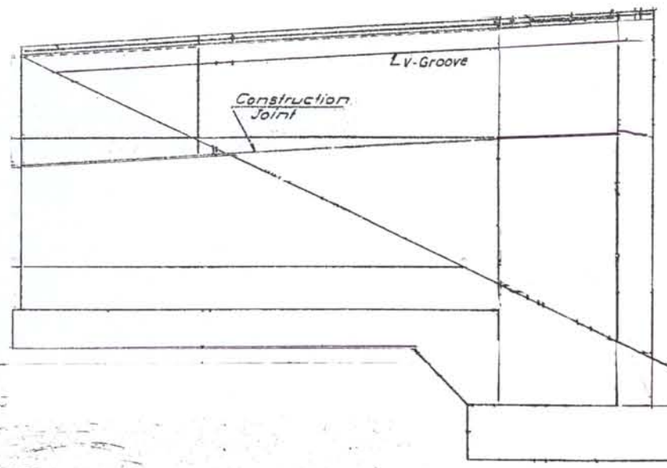

ELEVATION
N.E. WINGWALL

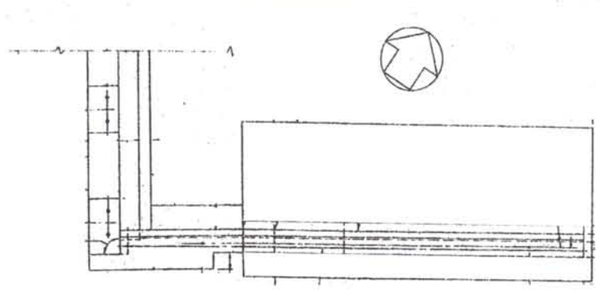

PLAN

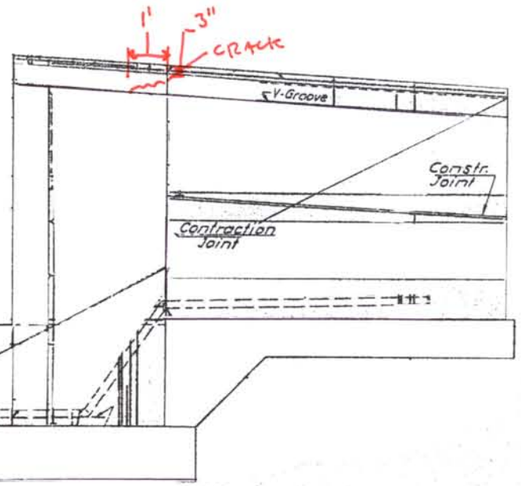

ELEVATION
S.E. WINGWALL

LEGEND
- CORE LOCATION
- PHOTO LOCATION
- DELAMINATION
- SPALLING
- CRACK
- MAP CRACKING
- MOISTURE

NOTES:
- CONCRETE APPEARS TO BE IN GOOD CONDITION WITH ONLY MINOR ISOLATED DELAMINATION AND CRACKING UNLESS NOTED

BIN 1069090

BRIDGE NO. 1
CONNECTOR "H" OVER
CONNECTOR "G" AND I-81
EAST ABUTMENT WINGWALLS

Prepared and recommended GOODKIND & O'DEA, INC. Consulting Engineers
Date 12/1/75

DWG. NO.	SCALE	DATE	GOODKIND & O'DEA, INC. CONSULTING ENGINEERS
15	4"=1'-0"	Nov. 1975	

(8)

D95042

FED. ROAD REG. NO.	STATE	FEDERAL AID PROJECT NO.	SHEET NO.	TOTAL SHEETS
1	N.Y.	I-IU-481-2(74) I-UI-81-2(128)	278	571

INTERSTATE ROUTE CONNECTION 571
FOREST INTERCHANGE – JAMESVILLE
ONONDAGA COUNTY

NOTES:
SPAN 1 - 100% INSPECTION OF GUSSET PLATES AND LONGITUDINAL STIFFNERS. APPEAR TO BE IN GOOD CONDITION.
SPAN 2 - 100% INSPECTION OF GUSSET PLATES AND LONGITUDINAL STIFFNERS. APPEAR TO BE IN GOOD CONDITION.
SPAN 3 - 100% INSPECTION OF GUSSET PLATES AND LONGITUDINAL STIFFNERS. APPEAR TO BE IN GOOD CONDITION.

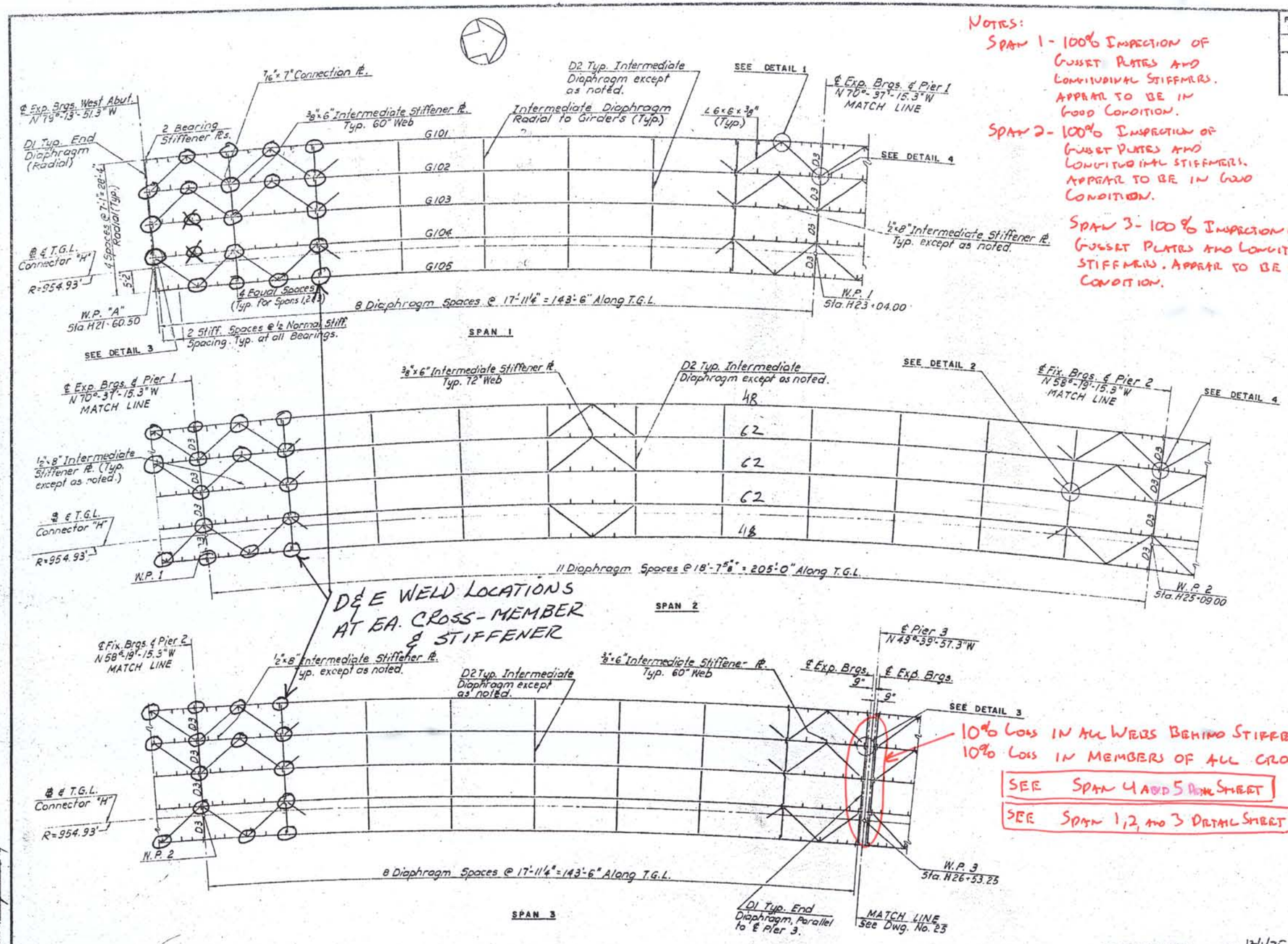

10% LOSS IN ALL WEBS BEHIND STIFFENER PLATES
10% LOSS IN MEMBERS OF ALL CROSS BRACINGS.

SEE SPAN 4 AND 5 DETAIL SHEET

SEE SPAN 1, 2, AND 3 DETAIL SHEET

LEGEND
CORE LOCATION
PHOTO LOCATION
DELAMINATION
SPALLING
CRACK
MAP CRACKING
MOISTURE

REFERENCES:
1. For Working Point Layout, see Dwg. No. 5.
2. For Anchor Bolt Layout, see Dwg. Nos. 12 & 22.
3. For Deck Cross Section, Fascia, Haunch, Curb and Lighting Details, see Dwg. No. 32.
4. For Diaphragm Details, see Dwg. No. 27.
5. For Bearing Details, see Dwg. No. 26.
6. For Field Splice Details, see Dwg. No. 28.
7. For Elastomeric Joint Details, see Dwgs. No. CD-14 & 15.
8. For Structural Steel Details, see Dwg. No. CD-9.
9. For General Superstructure Notes, see Dwg. Nos. CD-1 & CD-2.
10. For Additional Details, see Dwg. Nos. 24 & 25.
11. For Design Moments and Cambers, see Dwg. No. 29.
12. For Locations of Elastomeric Joints, see Dwg. No. 7.
13. For Details 1 through 4, see Dwg. No. 27.

B IN 1069090

BRIDGE NO. 1
CONNECTOR "H" OVER
CONNECTOR "G" AND I-81
FRAMING PLAN
SPANS 1, 2 & 3

Prepared and recommended
GOODKIND & O'DEA, INC.
Date 12/1/75
Consulting Engineers

DWG. NO.	SCALE	DATE	
23	1"=10'	Nov. 1975	GOODKIND & O'DEA, INC. CONSULTING ENGINEERS

Design Checked by L.A. Grozzy
Detailed by L. Volkoff
Detail Checked by [signature]

9

D95042

D&E WELD LOCATIONS AT EA. CROSS-MEMBER & STIFFENER

FED. ROAD REG. NO.	STATE	FEDERAL AID PROJECT NO.	SHEET NO.	TOTAL SHEETS
1	N.Y.	I-IO-4ST-2(149) I-III-R1-2(126)	280	571

INTERSTATE ROUTE CONNECTION 571
FOREST INTERCHANGE - JAMESVILLE
ONONDAGA COUNTY

LEGEND
CORE LOCATION
PHOTO LOCATION
DELAMINATION
SPALLING
CRACK
MAP CRACKING
MOISTURE

10% LOSS IN ALL WEBS BEHIND STIFFENER PLATES
10% LOSS IN MEMBERS OF ALL CROSS BRACINGS
SEE SPAN 4 AND 5 DETAIL SHEET

SEE SPAN 1, 2 AND 3 DETAIL SHEET

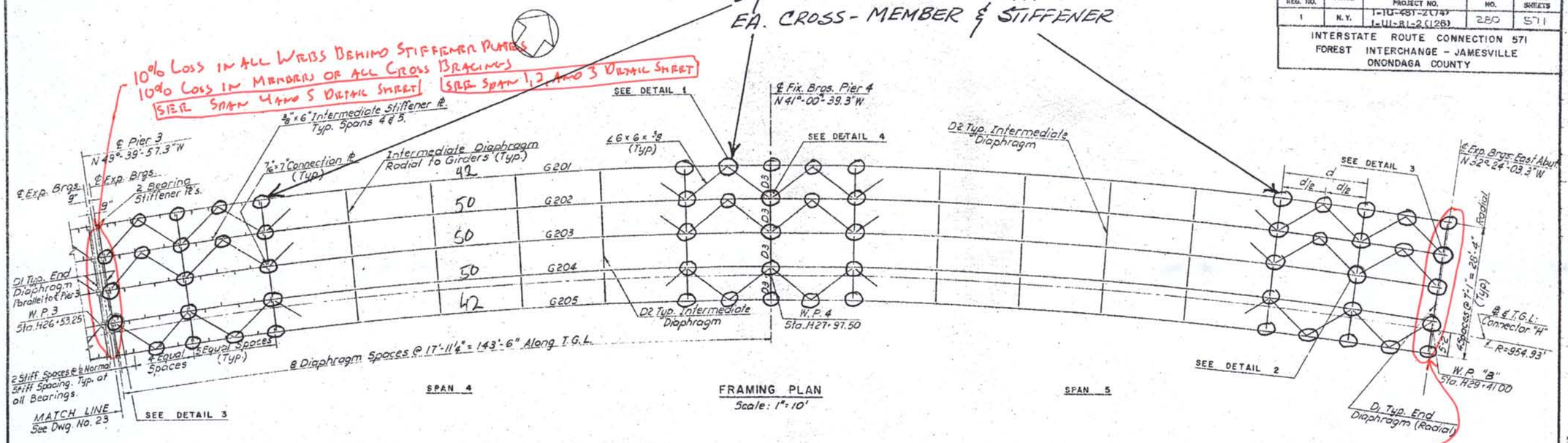

FRAMING PLAN
Scale: 1"=10'

SEE SPAN 4 AND 5 DETAIL SHEET

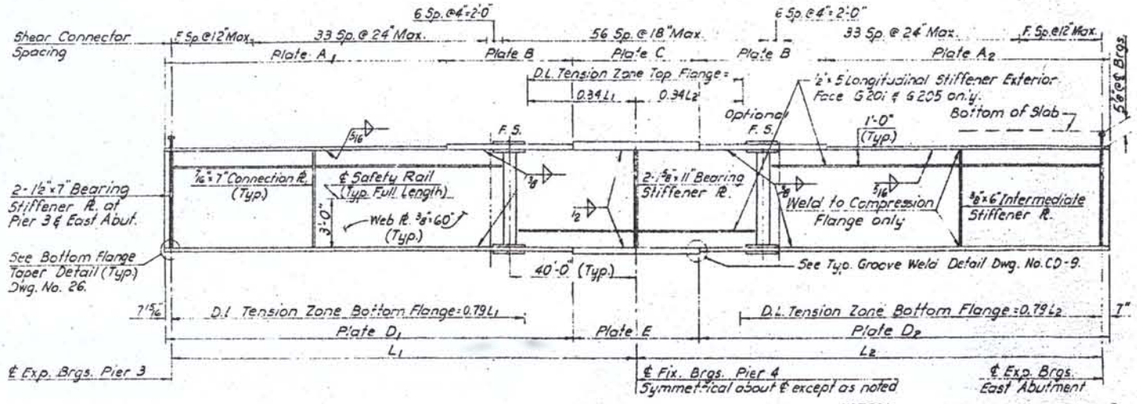

GIRDER ELEVATION
Not to Scale

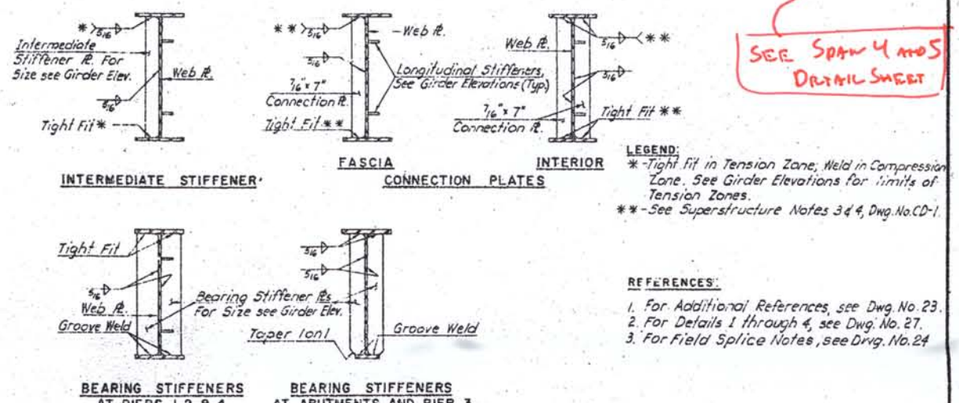

GIRDER SECTIONS
Not to Scale

NOTES:
1. Girder Webs and Flanges, Stiffeners, Connection Plates and Diaphragms shall conform to current ASTM Designation A-36.
2. Symbol "F.S." indicates location of Field Splice.

REFERENCES:
1. For Additional References, see Dwg. No. 23.
2. For Details 1 through 4, see Dwg. No. 27.
3. For Field Splice Notes, see Dwg. No. 24

GIRDER SCHEDULE

MARK	SPAN LENGTH C/C BEARINGS L1	SPAN LENGTH C/C BEARINGS L2	RADIUS (FEET)	PLATE A SIZE	PLATE A A1	PLATE A A2	PLATE B SIZE	PLATE B LENGTH	PLATE C SIZE	PLATE C LENGTH	PLATE D SIZE	PLATE D D1	PLATE D D2	PLATE E SIZE	PLATE E LENGTH	SHEAR STUDS F
G201	147'-0"	146'-11 3/4"	978.096	1 1/8" x 24"	87'-7 15/16"	87'-6 3/4"	1 3/4" X 24"	40'-0"	3" X 24"	40'-0"	1 3/4" X 24"	127'-7 15/16"	127'-6 3/4"	3" x 24"	40'-0"	37
G202	145'-11 1/8"	145'-11"	971.013	1 1/8" x 24"	86'-7 1/16"	86'-6"	1 3/4" X 24"	40'-0"	3" X 24"	40'-0"	1 3/4" X 24"	126'-7 1/16"	126'-6"	3" x 24"	40'-0"	36
G203	144'-10 3/8"	144'-10 1/4"	963.930	1" x 24"	85'-6 5/16"	85'-5 1/4"	1 1/2" X 24"	40'-0"	2 1/2" X 24"	40'-0"	1 1/2" X 24"	125'-6 5/16"	125'-5 1/4"	2 1/2" x 24"	40'-0"	35
G204	143'-9 1/2"	143'-9 1/2"	956.846	1" x 24"	84'-5 7/16"	84'-4 1/2"	1 1/2" X 24"	40'-0"	2 1/2" X 24"	40'-0"	1 1/2" X 24"	24'-6 5/16"	124'-4 1/2"	2 1/2" x 24"	40'-0"	34
G205	142'-8 5/8"	142'-8 5/8"	949.763	1" x 24"	83'-4 9/16"	83'-3 5/8"	1 1/2" X 24"	40'-0"	2 1/2" X 24"	40'-0"	1 1/2" X 24"	123'-4 9/16"	123'-3 5/8"	2 1/2" x 24"	40'-0"	33

124'-5 7/16"

Notes.
Span 4 - 100% Inspection of Gusset Plates and Longitudinal Stiffeners. Appear to be in Good Condition.
Spans - 100% Inspection of Gusset Plates and Longitudinal Stiffeners. Appear in Good Condition.

BIN 1069090
BRIDGE NO. 1
CONNECTOR "H" OVER CONNECTOR "G" AND I-81
FRAMING PLAN AND GIRDER DETAILS SPANS 4 & 5

Prepared and recommended: D Goodkind
GOODKIND & O'DEA, INC. Consulting Engineers
Date 12/1/75

DWG. NO.	SCALE	DATE	GOODKIND & O'DEA, INC. CONSULTING ENGINEERS
25	As noted	Nov. 1975	

Design Checked by L. Goodkind
Detailed by L. Goodkind
Detail Checked by [illegible]

40

1069090
D06042

FED. ROAD REG. NO.	STATE	FEDERAL AID PROJECT NO.	SHEET NO.	TOTAL SHEETS
I	N.Y.	I-IO-481-2 (14) I-VI-81-2 (126)	279	57

INTERSTATE ROUTE CONNECTION 571
FOREST INTERCHANGE - JAMESVILLE
ONONDAGA COUNTY

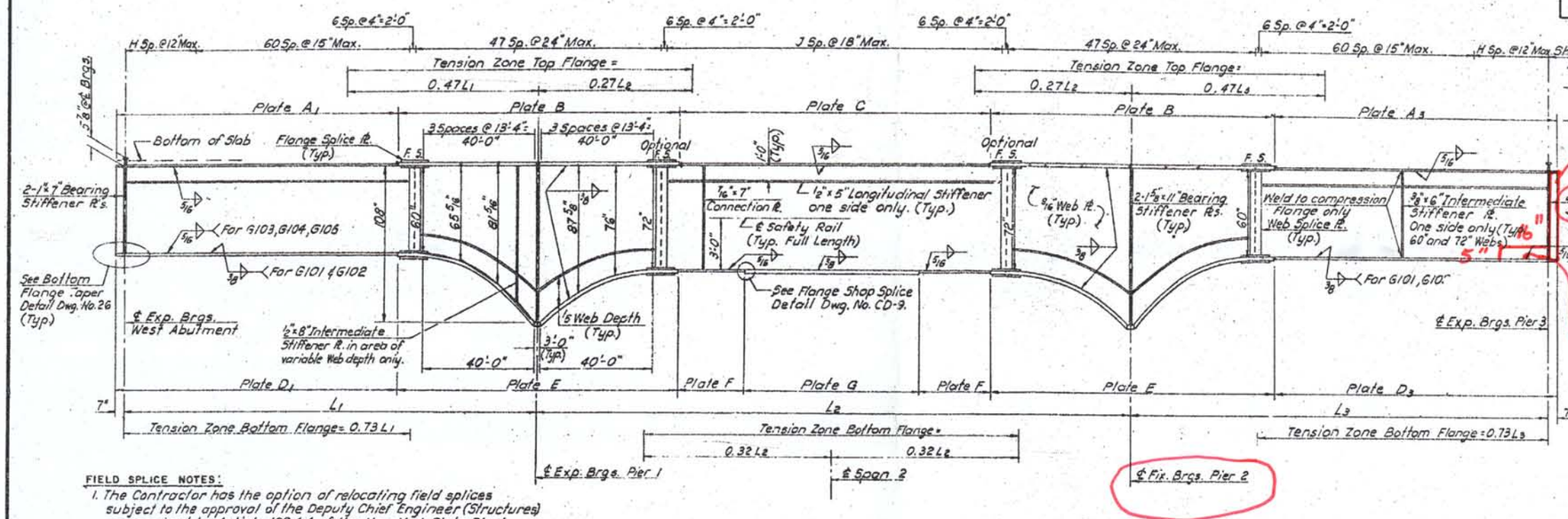

GIRDER ELEVATION
Not to Scale

"G-1" WEB PLATE
BOTTOM 12" - 40% LOSS
12"-18" - 25% LOSS
18" - 10% LOSS

"G-1"
65% LOSS IN BOTTOM 6" OF OUTSIDE STIFFENER PLATE

"G-5"
25% WEB LOSS

FIELD SPLICE NOTES:

1. The Contractor has the option of relocating field splices subject to the approval of the Deputy Chief Engineer (Structures) as required by Article 102.4.4 of the New York State Steel Construction Manual.
2. There will be no payment made by the State for additional splice plat., bolts, nuts, washers or any increase in thickness of webs or flanges made necessary by relocated or additional field splices requested by the contractor.

NOTES:

1. Girder Webs and Flanges, Stiffeners, Connection Pl's and Diaphragms shall conform to current A.S.T.M. Designation A36.
2. Symbol "F.S." indicates location of Field Splice.

LEGEND
CORE LOCATION
PHOTO LOCATION
DELAMINATION
SPALLING
CRACK
MAP CRACKING
MOISTURE

GIRDER SCHEDULE

MARK	SPAN LENGTHS C/C BEARINGS L1 (FEET)	L2 (FEET)	L3 (FEET)	RADIUS (FEET)	FLANGE PLATES A1 AND A3 SIZE	A1 AND A3 LENGTH	B SIZE	B LENGTH	C SIZE	C LENGTH	D1 AND D3 SIZE	D1 AND D3 LENGTH	E SIZE	E LENGTH	F SIZE	F LENGTH	G SIZE	G LENGTH	SHEAR STUDS H	SHEAR STUDS J	ADDITIONAL FLANGE LENGTHS A1 AND D1	ADDITIONAL FLANGE LENGTHS A3 AND D3	ADDITIONAL FLANGE LENGTHS C
G101	146'-11 3/8"	209'-11 5/8"	147'-0"	978.096	1 1/4" X 24"	*	2" X 24"	94'-0"	1 1/4" X 24"	*	1 1/2" X 24"	*	2" X 24"	94'-0"	1 1/4" X 24"	27'-6"	1 3/4" X 24"	60'-11 5/8"	20	79	100'-6 3/4"	100'-7 15/16"	115'-11 5/8"
G102	145'-11"	208'-5 3/8"	145'-11 1/8"	971.013	1 1/4" X 24"	*	2" X 24"	94'-0"	1 1/4" X 24"	*	1 1/2" X 24"	*	2" X 24"	94'-0"	1 1/4" X 24"	27'-6"	1 3/4" X 24"	59'-5 3/8"	19	79	99'-6"	99'-7 1/16"	114'-5 3/8"
G103	144'-10 1/4"	206'-11 1/8"	144'-10 3/8"	963.930	1" X 24"	*	1 5/8" X 24"	94'-0"	1" X 24"	*	1 1/4" X 24"	*	1 5/8" X 24"	94'-0"	1" X 24"	27'-6"	1 1/2" X 24"	57'-11 1/8"	18	77	98'-5 1/4"	98'-6" 5/16"	112'-11 1/8"
G104	143'- 9 1/2"	205'-5"	143'- 9 1/2"	956.846	1" X 24"	*	1 5/8" X 24"	94'-0"	1" X 24"	*	1 1/4" X 24"	*	1 5/8" X 24"	94'-0"	1" X 24"	26'-6"	1 1/2" X 24"	57'-5"	17	77	97'-4 1/2"	97'-5 7/16"	111'-5"
G105	142'- 8 5/8"	203'-10 3/4"	142'- 8 5/8"	949.763	1" X 24"	*	1 5/8" X 24"	94'-0"	1" X 24"	*	1 1/8" X 24"	*	1 5/8" X 24"	94'-0"	1" X 24"	26'-6"	1 1/2" X 24"	56'-10 3/4"	16	75	96'-3 5/8"	96'-4 9/16"	109'-10 3/4"

58'-5"

* See Additional Flange Lengths Table.

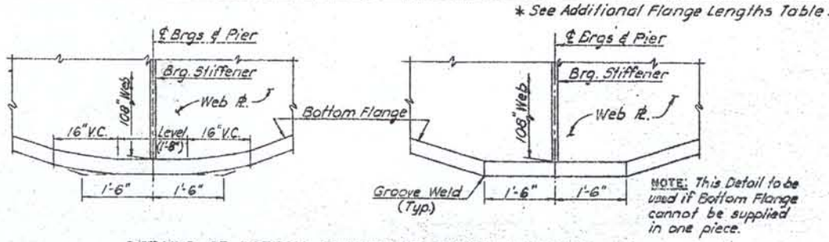

NOTE: This Detail to be used if Bottom Flange cannot be supplied in one piece.

DETAILS OF BOTTOM FLANGE AT GIRDER HAUNCHES
Scale: 3/4" = 1'-0"

NOTES:

THE CURVATURE SHOWN ON THE FLANGE, AS DETAILED, MAY BE OBTAINED BY BENDING THE FLANGE WHILE AT A TEMPERATURE OF BETWEEN 1000° F. AND 1200° F. HEATING SHALL BE PERFORMED IN ACCORDANCE WITH THE PROVISIONS OF THE NEW YORK STATE SPECIFICATION FOR HEAT-CURVING AND CAMBERING OF ROLLED BEAMS AND WELDED PLATE GIRDERS. APPROPRIATE ADJUSTMENT TO THE DEPTH OF THE WEB MUST BE MADE.

AFTER BENDING THE FLANGE TO THE REQUIRED CURVATURE, THE CONTRACTOR SHALL INSPECT ALL SURFACES NEAR THE BENDS FOR INDICATIONS OF CRACKING BY THE MAGNETIC PARTICLE METHOD. THE COST FOR THE MAGNETIC PARTICLE INSPECTION SHALL BE INCLUDED IN THE UNIT PRICE BID FOR THE STEEL.

REFERENCES:
1. For References, see Dwg. No. 23.

BIN 1069090
SPAN 1, 2, AND 3
DETAIL

BRIDGE NO. 1
CONNECTOR "H" OVER
CONNECTOR "G" AND I-81
GIRDER DETAILS SPANS 1, 2 & 3

Prepared and recommended
GOODKIND & O'DEA, INC.
Consulting Engineers
Date 12/1/75

DWG. NO.	SCALE	DATE	
24	As noted	Nov. 1975	GOODKIND & O'DEA, INC. CONSULTING ENGINEERS

In Charge of Design: [illegible]
Designed by: [illegible]
Detailed by: [illegible]
Checked by: [illegible]
Quantities by: [illegible]
Quantities Checked by: [illegible]

1069090

See Dwg. No. 25

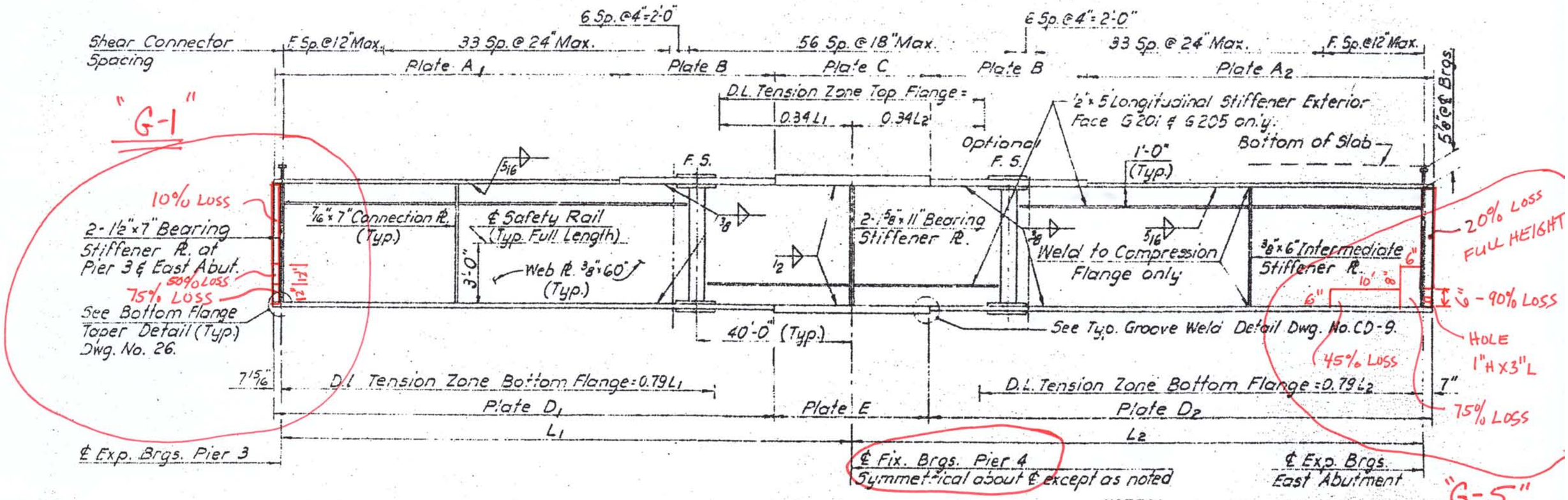

GIRDER ELEVATION
Not to Scale

NOTES:
1. Girder Webs and Flanges, Stiffeners, Conn Plates and Diaphragms shall conform

LEGEND
CORE LOCATION
PHOTO LOCATION
DELAMINATION
SPALLING
CRACK
MAP CRACKING
MOISTURE

BIN 1069090
SPAN 4 NBD S
DETAIL

IN-DEPTH PHOTO DOCUMENTATION

C&S Engineers, Inc.
499 Col. Eileen Collins Blvd.
Syracuse, New York 13212
Phone: (315) 455-2000
Fax: (315) 455-9667
www.cscos.com

I-481 SB over I-81 Ramp to I-81 SB- BIN 1069090



DESCRIPTION: WEST ABUTMENT –GENERAL VIEW-

PHOTO 1



DESCRIPTION: WEST ABUTMENT – PEDESTAL 1 – MOISTURE & MAPCRACKING ON BACKWALL

PHOTO 2

C&S Engineers, Inc.
499 Col. Eileen Collins Blvd.
Syracuse, New York 13212
Phone: (315) 455-2000
Fax: (315) 455-9667
www.cscos.com

I-481 SB over I-81 Ramp to I-81 SB- BIN 1069090



DESCRIPTION: WEST ABUTMENT – BETWEEN PEDESTAL'S 2 & 3 – HOLLOW CONCRETE

PHOTO 3



DESCRIPTION: WEST ABUTMENT – BETWEEN PEDESTALS 3 & 5 – DELAMINATED & SPALLED CONCRETE

PHOTO 4

C&S Engineers, Inc.
499 Col. Eileen Collins Blvd.
Syracuse, New York 13212
Phone: (315) 455-2000
Fax: (315) 455-9667
www.cscos.com

I-481 SB over I-81 Ramp to I-81 SB- BIN 1069090



DESCRIPTION: WEST ABUTMENT – PEDESTAL 4 – TYPICAL BEARING

PHOTO 5



DESCRIPTION: WEST ABUTMENT – RIGHT FASCIA PEDESTAL 5 – DEBRIS BUILDUP AROUND BEARING, GIRDER RUSTING.

PHOTO 6

C&S Engineers, Inc.
499 Col. Eileen Collins Blvd.
Syracuse, New York 13212
Phone: (315) 455-2000
Fax: (315) 455-9667
www.cscos.com

I-481 SB over I-81 Ramp to I-81 SB- BIN 1069090



DESCRIPTION: WEST ABUTMENT – RIGHT WING WALL – LOCALIZED HOLLOWNESS

PHOTO 7



DESCRIPTION: WEST ABUTMENT – RIGHT WING WALL – SAPLL AT TOP OF WING

PHOTO 8

C&S Engineers, Inc.
499 Col. Eileen Collins Blvd.
Syracuse, New York 13212
Phone: (315) 455-2000
Fax: (315) 455-9667
www.cscos.com

I-481 SB over I-81 Ramp to I-81 SB- BIN 1069090



DESCRIPTION: SPAN 1 – RIGHT FASCIA – PAINT DETERIORATION

PHOTO 9



DESCRIPTION: PIER 1 – BEGINNING FACE – TYPICAL VIEW OF PIERS

PHOTO 10

C&S Engineers, Inc.
499 Col. Eileen Collins Blvd.
Syracuse, New York 13212
Phone: (315) 455-2000
Fax: (315) 455-9667
www.cscos.com

I-481 SB over I-81 Ramp to I-81 SB- BIN 1069090



DESCRIPTION: PIER 1 – LEFT FASCIA PEDESTAL– NO JOINT ON PIER

PHOTO 11



DESCRIPTION: PIER 1 – BEGINNING FACE – SPALL BELOW PEDESTAL 3

PHOTO 12

C&S Engineers, Inc.
499 Col. Eileen Collins Blvd.
Syracuse, New York 13212
Phone: (315) 455-2000
Fax: (315) 455-9667
www.cscos.com

I-481 SB over I-81 Ramp to I-81 SB- BIN 1069090



DESCRIPTION: SPAN 2 – TYPICAL GUSSET PLATE WELDED TO BOTTOM FLANGE -

PHOTO 13



DESCRIPTION: SPAN 2 – RANDOM RUSTING OF STAY-IN PLACE-FORM – RIGHT SIDE

PHOTO 14

C&S Engineers, Inc.
499 Col. Eileen Collins Blvd.
Syracuse, New York 13212
Phone: (315) 455-2000
Fax: (315) 455-9667
www.cscos.com

I-481 SB over I-81 Ramp to I-81 SB- BIN 1069090



DESCRIPTION: PIER 2 – PEDESTAL 3 – SPALLING ON BEGINNING FACE

PHOTO 15

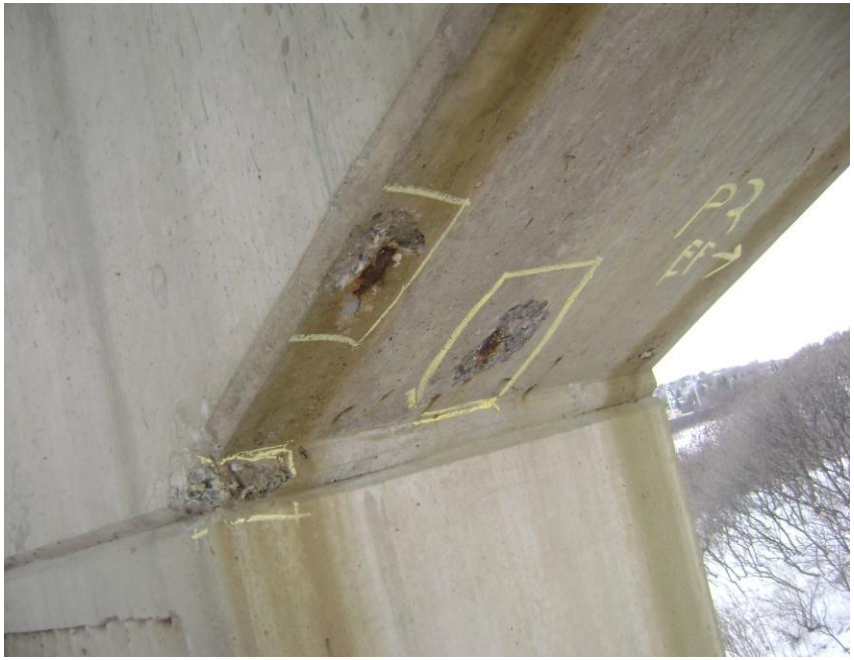

DESCRIPTION: PIER 2 – BOTTOM OF CAPBEAM, RIGHT SIDE – SPALLS

PHOTO 16

C&S Engineers, Inc.
499 Col. Eileen Collins Blvd.
Syracuse, New York 13212
Phone: (315) 455-2000
Fax: (315) 455-9667
www.cscos.com

I-481 SB over I-81 Ramp to I-81 SB- BIN 1069090



DESCRIPTION: PIER 2 – PEDESTAL 3 – SPALLING ON END FACE

PHOTO 17



DESCRIPTION: PIER 2 – RIGHT FASCIA PEDESTAL – CRACKING ON END FACE

PHOTO 18

C&S Engineers, Inc.
499 Col. Eileen Collins Blvd.
Syracuse, New York 13212
Phone: (315) 455-2000
Fax: (315) 455-9667
www.cscos.com

I-481 SB over I-81 Ramp to I-81 SB- BIN 1069090



DESCRIPTION: SPAN 3 – RIGHT FASCIA, JUST PAST BEGINNING WEB SPLICE PLATE – LONGITUDINAL CRACKING OF FASCIA CONCRETE

PHOTO 19



DESCRIPTION: PIER 3 – BEGIN FACE – HOLLOWNESS AND MOISTURE AT PEDESTAL 2

PHOTO 20

C&S Engineers, Inc.
499 Col. Eileen Collins Blvd.
Syracuse, New York 13212
Phone: (315) 455-2000
Fax: (315) 455-9667
www.cscos.com

I-481 SB over I-81 Ramp to I-81 SB- BIN 1069090

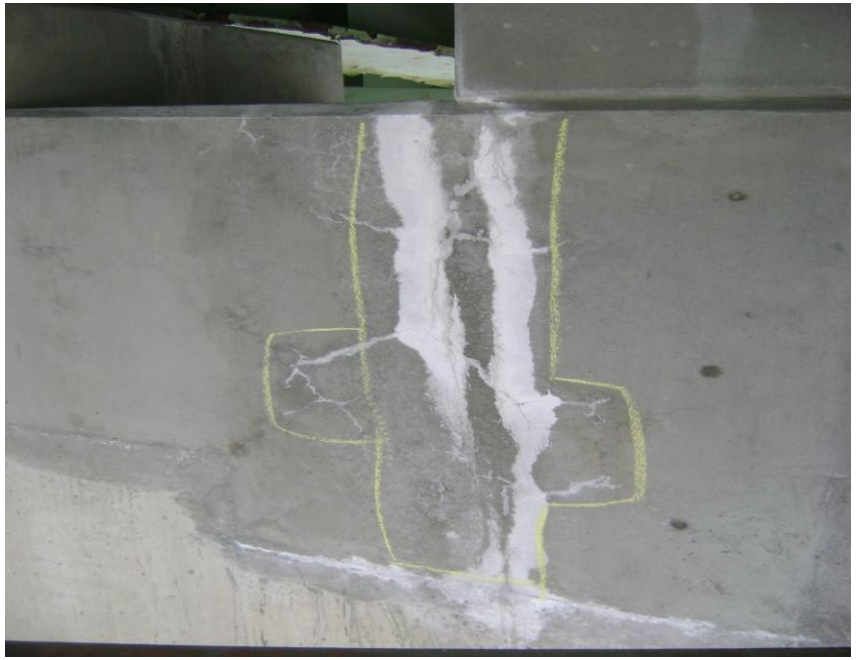

DESCRIPTION: PIER 3 – BEGIN FACE – HOLLOWNESS AND CRACKING BELOW PEDESTAL 3

PHOTO 21



DESCRIPTION: PIER 3 – EAST FACE – HEAVY LEAKAGE FROM JOINT HAS LED TO EXTENSIVE MAP CRACKING AND EFFLORESCENCE BUILDUP

PHOTO 22

C&S Engineers, Inc.
499 Col. Eileen Collins Blvd.
Syracuse, New York 13212
Phone: (315) 455-2000
Fax: (315) 455-9667
www.cscos.com

I-481 SB over I-81 Ramp to I-81 SB- BIN 1069090



DESCRIPTION: PIER 3 – RIGHT FASCIA – SPALLING OF FASCIA AT JOINT

PHOTO 23



DESCRIPTION: PIER 3 – SPANS 3 & 4 LEFT FASCIA GIRDERS – RUSTING WITH SECTION LOSS OF GIRDERS

PHOTO 24

C&S Engineers, Inc.
499 Col. Eileen Collins Blvd.
Syracuse, New York 13212
Phone: (315) 455-2000
Fax: (315) 455-9667
www.cscos.com

I-481 SB over I-81 Ramp to I-81 SB- BIN 1069090



DESCRIPTION: PIER 3 - SPAN 3 – WEB LOSS IN END OF LEFT FASCIA GIRDER

PHOTO 25



DESCRIPTION: PIER 3 – SPAN 3 - END OF LEFT FASCIA GIRDER – SECTION LOSS AT BOTTOM OF OUTSIDE WEB STIFFENER

PHOTO 26

C&S Engineers, Inc.
499 Col. Eileen Collins Blvd.
Syracuse, New York 13212
Phone: (315) 455-2000
Fax: (315) 455-9667
www.cscos.com

I-481 SB over I-81 Ramp to I-81 SB- BIN 1069090



DESCRIPTION: PIER 3 – SPAN 3 – WEB LOSS AT END OF RIGHT FASCIA GIRDER

PHOTO 27



DESCRIPTION: PIER 3 – SPAN 4 – WEB LOSS AT BEGINNING END OF LEFT FASCIA GIRDER

PHOTO 28

C&S Engineers, Inc.
499 Col. Eileen Collins Blvd.
Syracuse, New York 13212
Phone: (315) 455-2000
Fax: (315) 455-9667
www.cscos.com

I-481 SB over I-81 Ramp to I-81 SB- BIN 1069090



DESCRIPTION: PIER 3 –2 ND BAY CROSS BRACING – LEAKY JOINT HAS LEAD TO RUSTED CROSS BRACING – TYPICAL ALL BAYS @ PIER 3

PHOTO 29



DESCRIPTION: PIER 4 – END FACE (EAST) – GENERAL VIEW – NO JOINT, NO DETERIORATION

PHOTO 30

C&S Engineers, Inc.
499 Col. Eileen Collins Blvd.
Syracuse, New York 13212
Phone: (315) 455-2000
Fax: (315) 455-9667
www.cscos.com

I-481 SB over I-81 Ramp to I-81 SB- BIN 1069090



DESCRIPTION: SPAN 5 – RIGHT FASCIA GIRDER – WEB LOSS AT END OF GIRDER @ END ABUTMENT

PHOTO 31



DESCRIPTION: SPAN 5 – RIGHT FASCIA GIRDER – WEB LOSS BEHIND WEB STIFFENER @ END ABUTMENT. BUILDUP OF EFFLORESENCE ON BACKWALL

PHOTO 32

C&S Engineers, Inc.
499 Col. Eileen Collins Blvd.
Syracuse, New York 13212
Phone: (315) 455-2000
Fax: (315) 455-9667
www.cscos.com

I-481 SB over I-81 Ramp to I-81 SB- BIN 1069090



DESCRIPTION: END ABUTMENT – FROM LEFT SIDE – EFFLORESCENCE BUILDUP ON BACKWALL, PED'S, AND STEM FACE BELOW PEDESTALS 1, 2, & 5.

PHOTO 33



DESCRIPTION: END ABUTMENT – FROM RIGHT SIDE – SPALL AT TOP OF BACKWALL BEHIND GIRDER 5

PHOTO 34

C&S Engineers, Inc.
499 Col. Eileen Collins Blvd.
Syracuse, New York 13212
Phone: (315) 455-2000
Fax: (315) 455-9667
www.cscos.com

I-481 SB over I-81 Ramp to I-81 SB- BIN 1069090



DESCRIPTION: END RIGHT WING WALL – SPALL AND DELAMINATION AT TOP – RUST AND EFFLO STAINING

PHOTO 35



DESCRIPTION: BRIDGE DECK – BEGIN APPROACH FACING NORTHEAST

PHOTO 36

1069090

I-481 SB to I-81 SB RAMP OVER I-81

1 of 2

PHOTO LOCATION PLAN BELOW DECK

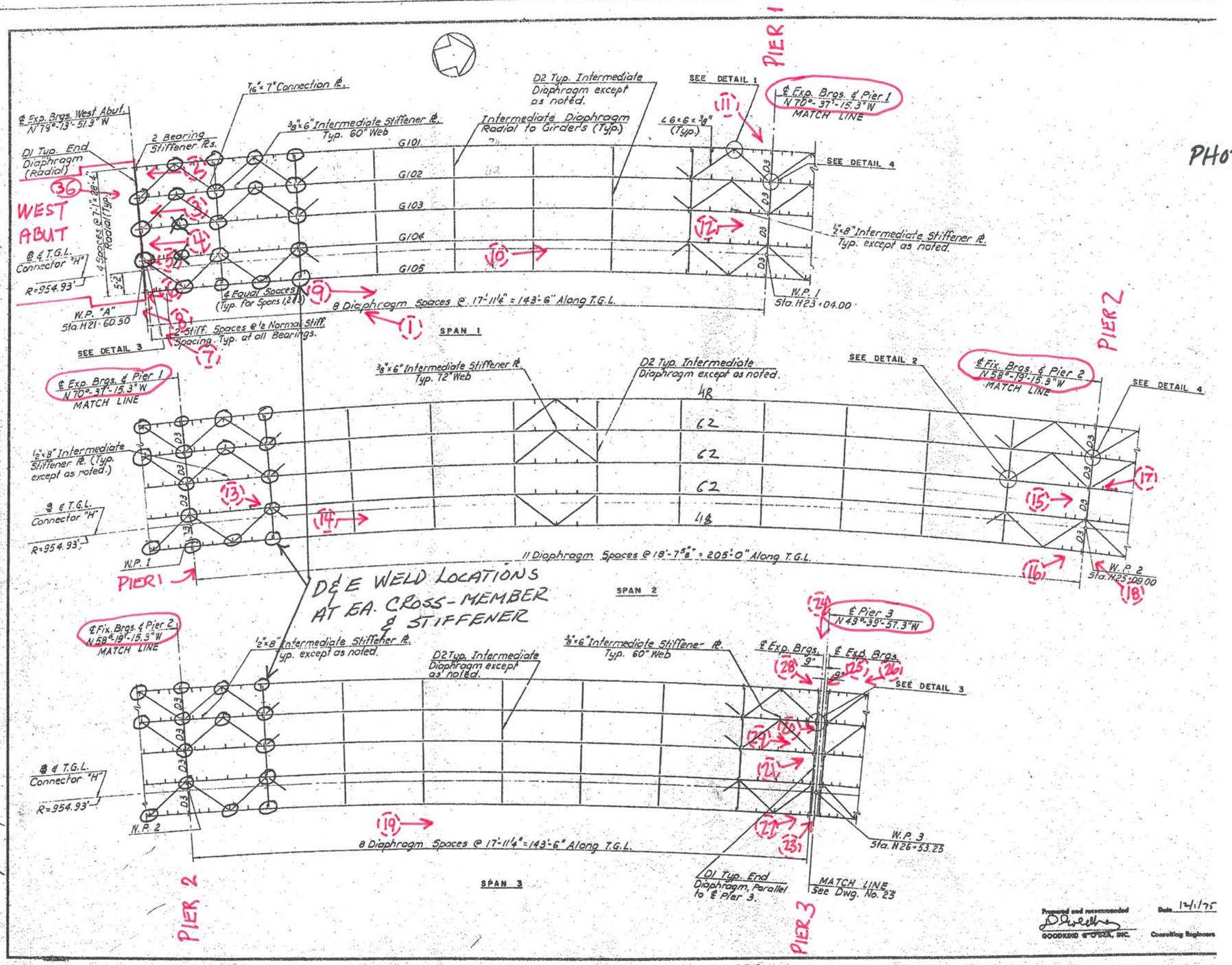

(→ INDICATES PHOTO WAS TAKEN BELOW THE BRIDGE DECK

(→ INDICATES PHOTO WAS TAKEN ABOVE THE BRIDGE DECK

1069090

2 of 2

D95042

FED. ROAD REG. NO.	STATE	FEDERAL AID PROJECT NO.	SHEET NO.	TOTAL SHEETS
1	N.Y.	I-IG-481-2(74) I-III-81-2(126)	280	571

INTERSTATE ROUTE CONNECTION 571
FOREST INTERCHANGE - JAMESVILLE
ONONDAGA COUNTY

D&E WELD LOCATIONS AT EA. CROSS-MEMBER & STIFFENER

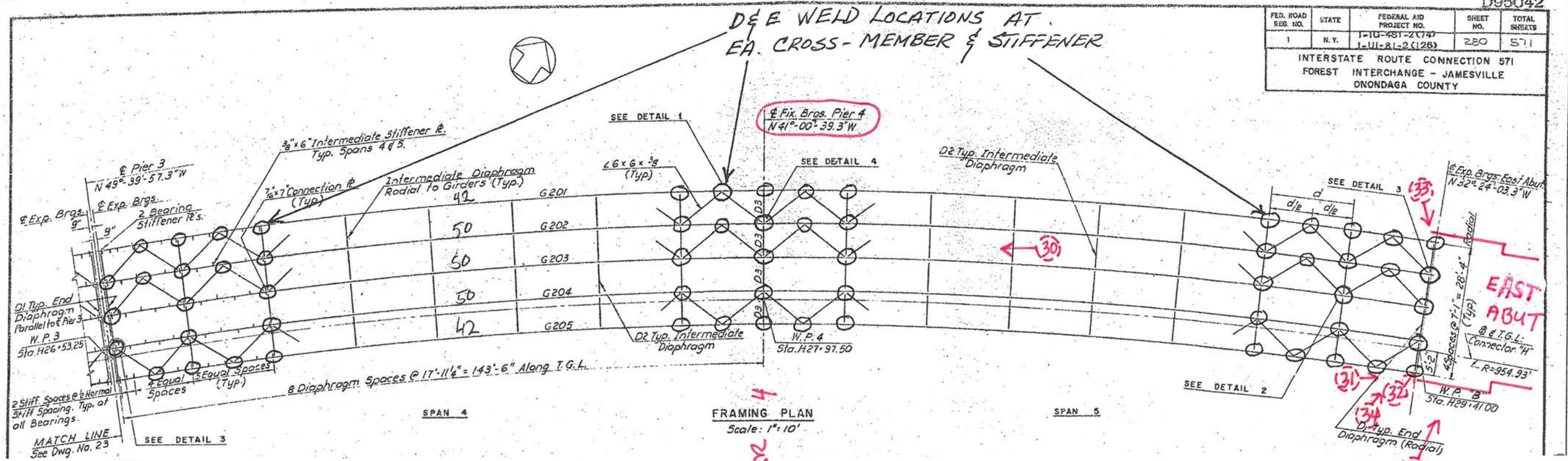

ASBESTOS DOCUMENTATION

HUDSON ENVIRONMENTAL SERVICES, INC.
Mail: 22 Hudson Falls Rd., So. Glens Falls, NY 12803
Delivery: 211 Ferry Blvd., So. Glens Falls, NY 12803
Phone: 518/747-1060 Fax: 518/747-1062

ANALYTICAL TEST RESULTS
N.Y.S.D.O.H. LAB ID#11140
*ANALYZED BY N.Y.S.D.O.H. LAB ID#10898

CLIENT: NYSDOT Region 3
SAMPLE DESCRIPTION: See Below
MATRIX: Solid
LOCATION: Bin #1069090
H.E.S. #: See Below

DATE SAMPLED: 07/15/03
TIME SAMPLED: Not Specified
DATE SAMPLE RECD: 09/12/03
TYPE SAMPLE: Grab
SAMPLER: SG/NYSDOT Region 3

NOB BULK MATERIAL ANALYSIS FOR ASBESTOS

TEST METHOD:EPA-600 93/116 JULY 1993 NYSDOH ELAP 198.1 AND 198.4

HES LAB ID#: 030912F	F01	F02	F03
LAB ID#: E03	2592	2593	2594
CLIENT: SAMPLE ID/DESCRIPTION	1069090-01 Span-1 Right Fascia Girder Bot Flange	1069090-02 Span-1 Right Fascia Girder Web	1069090-03 Span-2 G-2 Bot Flange At Beg
COLOR	Green	Green	Green
HOMOGENEOUS(YES/NO)	Yes	Yes	Yes
ORGANIC %	38	51	51
ACID-SOLUBLE INORGANICS %	6	25	25
INSOL NON-ASBESTOS INORGANIC %	56	24	24
ASBESTOS ANALYSIS			
CHRYSOTILE %			
AMOSITE %			
CROCIDOLITE %			
OTHER AMPHIBOLE %			
TOTAL ASBESTOS % (PLM)	ND	ND	ND
ASBESTOS ANALYSIS			
TYPE OF ASBESTOS			
PERCENTAGE OF ASBESTOS (TEM)	ND	ND	ND
TOTAL	100	100	100

ND=NONE DETECTED

Approval By: [signature]

Date: 9/22/03

Hudson Environmental Services, Inc. certifies that the services provided were performed in accordance with the New York State Department of Health, Environmental Laboratory Approval Program certification manual. This report shall not be reproduced without written consent from HES, Inc. In the event of an error, HES's sole responsibility will be to perform reanalysis at its own expense. HES, Inc. assumes no other liability for damages incurred from the interpretation or use of the analysis provided.

(OVER)

HUDSON ENVIRONMENTAL SERVICES, INC.

Mail: 22 Hudson Falls Road, South Glens Falls, NY 12803
Delivery: 211 Ferry Blvd., South Glens Falls, NY 12803
Phone: 518/747-1060 Fax: 518/747-1062

CHAIN OF CUSTODY RECORD/ Lab Work Request

HES

Client NYS Dept. of Transportation-Region 3
Client Contact/Person # Christopher Anderson
Project Location B.I.N. 1069090
Purchase Order
HES Contact William Frawley

Mail Address NYS Dept. of Transportation
333 E. Washington Street
Syracuse, NY 13202
Phone # (315) 428-4628

HES Use Only Lab ID	Sample ID / Description	Date Collected	TIME A=a.m. P=p.m.	SAMPLE TYPE C=Composite G=Grab MATRIX	C	G	# Cont.	ANALYSIS REQUIRED
030912F01	1069090-01 SPAN 1		A P	SO		X	1	Asbestos Bulk - NOB
	RIGHT FASCIA GIRDER BOT FLANGE		A P					
			A P					
F02	1069090-02 SPAN 1		A P	SO		X	1	" " "
	LIGHT FASCIA GIRDER WEB		A P					
			A P					
F03	1069090-03 SPAN 2		A P	SO		X	1	" " "
	G-2 BOT FLANGE AT BEAM		A P					

Matrix: S - Soil, SE - Sediment, SO - Solid, SL - Sludge, O - Oil, DW - Drinking Water, GW - Ground Water, SW - Surface Water, L - Leachate, A - Air, WI - Wipe, DS - Drum Solids, DL - Drum Liquids, X - Other, WW - Waste Water

Special Instructions: Bridge coating - If PLM negative, TEM confirmation on all.

Sampled by: (Signature) [signature]	Date/Time 9-15-03	Received by: (Signature) [signature]	Date/Time 9/16/03 12:00
Relinquished by: (Signature)	Date/Time	Received by: (Signature)	Date/Time
Relinquished by: (Signature)	Date/Time	Received by: (Signature)	Date/Time
Dispatched by: (Signature)	Method of Shipment:		Date/Time
Received @ Laboratory: [signature]	Date/Time 9/12/03 3:20PM	Turnaround Time: Normal	Lab Approval:

HES Use Only

Samples Were:
1. Shipped or Hand Delivered NOTES:
2. Ambient or Chilled NOTES: 6-28
3. Received Broken/Leaking (Improperly Sealed) Y N NOTES:
4. Properly Preserved NOTES: Y N
5. Received Within Holding Times Y N NOTES:

COC Tape Was:
1. Present on Outer Package Y N
2. Unbroken on Outer Package Y N
3. Present on Sample Y N
4. Unbroken on Sample NOTES: Y N

COC Record Was:
1. Present upon Receipt of Samples Y N

Discrepancies Between Sample Labels and COC Record? Y N NOTES:

WHITE - Lab Copy YELLOW - Sampler Copy PINK - Generator Copy

ASBESTOS DOCUMENTATION FROM WATTS ARCHITECTURE & ENGINEERING, INC.

(WILL REPLACE BIN FOLDER ASBESTOS REPORT UPON COMPLETION)

NEW YORK STATE
DEPARTMENT OF TRANSPORTATION
D031085 P.I.N 3501.60

LEVEL 1 LOAD RATING
B.I.N. 1069090
I-481 Southbound over I-81

LOAD RATING SUMMARY TABLE (LOAD FACTOR)				
CONTROLLING MEMBER	**CONTROLLING PARAMETER**	**LIVE LOAD**	**INVENTORY RATING**	**OPERATING RATING**
SPAN 4 INTERIOR GIRDER G202	SHEAR	HS20-44	HS 24.6 (44.2 TONS)	HS 41.2 (74.1 TONS)
SPAN 5 INTERIOR GIRDER G202	SHEAR	ALTERNATE MILITARY LOADING	1.77 (42.4 TONS)	2.95 (70.8 TONS)

DOES NOT INCLUDE FUTURE WEARING COURSE

ANALYSIS METHOD:LOAD FACTOR

RECOMMENDED POSTING AS-IS CONDITION: _____ Tons __X__ None

CALCULATED BY:

STATE OF NEW YORK JESSICA S. BAUER No. 084915 LICENSED PROFESSIONAL ENGINEER EXCELSIOR

DATE: 4/10/15

QUALITY ASSURANCE BY:

STATE OF NEW YORK PAUL F. BYRNE 055928 LICENSED PROFESSIONAL ENGINEER EXCELSIOR

DATE: 4/09/15

C&S COMPANIES®

499 Col. Eileen Collins Blvd.
Syracuse, NY 13212
phone 315-455-2000
fax 315-455-9667
www.cscos.com

C&S Engineers, Inc.
Syracuse Hancock International Airport
Syracuse, NY 13212
phone 315-455-2000
fax 315-455-9667
www.cscos.com

TECHNICAL MEMORANDUM

TO: **FILE (190.514.001)**

FROM: **PAUL BYRNE, P.E.**
NYSPE 055928

DATE: **APRIL 10, 2015**

C&S PROJECT NO.: 190.514.001

RE: **NEW YORK STATE DEPARTMENT OF TRANSPORTATION**
D031085; PIN 3501.60; I-81 Opportunities, BIN 1069090 Fatigue Evaluation

---

This memorandum documents a fatigue evaluation conducted for the existing Interstate 81 Viaduct Project. Existing structures with AASHTO Category D, E, and E' fatigue-prone details require 100% hands-on inspection unless proven to be exempt. The purpose of the evaluation is to assess the remaining life of fatigue-prone components.

EVALUATION PROCEDURES

The fatigue evaluation was performed in accordance with the AASHTO Guide Specification for Fatigue Evaluations of Existing Steel Bridges, 1990. Fatigue-prone welds identified in the biennial inspection reports were located on record drawings and confirmed visually in the field. Additional information concerning fatigue-prone welds located in BIN folders was also obtained and reviewed prior to inspection.

EVALUATION RESULTS

The results of the fatigue evaluation of the existing bridge are shown on the following pages.

Fatigue Detail Location			Remaining Safe Fatigue Life (Years)	Remaining Mean Fatigue Life (Years)
Gusset Plate Detail At or Near Midspan	Spans 1 & 3	Exterior Girder G101	67.76	435.20
		Interior Girder G102	317.91	1666.11
		Interior Girder G103	915.89	4608.61
		Interior Girder G104	529.56	2707.58
		Exterior Girder G105	253.59	1349.63
	Span 2	Exterior Girders G101	188.95	1031.53
		Interior Girder G102	737.72	3731.89
		Interior Girder G103	1631.89	8131.86
		Interior Girder G104	889.64	4479.47
		Exterior Girder G105	439.10	2528.19
	Spans 4 & 5	Exterior Girder G201	105.51	620.97
		Interior Girder G202	459.72	2363.95
		Interior Girder G203	1194.59	5980.04
		Interior Girder G204	643.48	3268.18
		Exterior Girder G205	309.26	1623.57
Longitudinal Stiffener Detail at Top of Web	Spans 1 & 3	Exterior Girder G101	1.04×10^5	5.13×10^5
		Interior Girder G102	6.29×10^6	3.06×10^7
		Interior Girder G103	3.40×10^8	1.68×10^9
		Interior Girder G104	2.14×10^8	1.05×10^9
		Exterior Girder G105	7.93×10^5	3.90×10^6
	Span 2	Exterior Girders G101	6.20×10^4	3.05×10^5
		Interior Girder G102	1.38×10^6	6.77×10^6
		Interior Girder G103	8.23×10^6	4.05×10^7
		Interior Girder G104	4.89×10^6	2.40×10^7
		Exterior Girder G105	2.66×10^5	1.31×10^6
	Spans 4 & 5	Exterior Girder G201	2.72×10^5	1.34×10^6
		Exterior Girder G205	1.92×10^6	9.44×10^6

Fatigue Detail Location			Remaining Safe Fatigue Life (Years)	Remaining Mean Fatigue Life (Years)
Longitudinal Stiffener Detail at Bottom of Web	Spans 1 & 3	Exterior Girder G101	707.02	3580.83
		Interior Girder G102	2290.92	11374.80
		Interior Girder G103	4967.00	24543.11
		Interior Girder G104	3170.46	15702.78
		Exterior Girder G105	2061.55	10246.11
	Span 2	Exterior Girders G101	1498.10	7473.54
		Interior Girder G102	5417.25	26758.70
		Interior Girder G103	7956.51	39253.76
		Interior Girder G104	4845.35	23944.49
		Exterior Girder G105	3082.30	15269.00
	Spans 4 & 5	Exterior Girder G201	529.35	2706.56
		Exterior Girder G205	1323.71	6615.42

ENGINEERS
DESIGN BUILD
TECHNICAL RESOURCES
OPERATIONS

C&S Companies

C&S Engineers, Inc.
Syracuse Hancock International Airport
Syracuse, NY 13212
phone 315-455-2000
fax 315-455-9667
www.cscos.com

TECHNICAL MEMORANDUM

TO: **FILE (190.514.001)**

FROM: **JESSICA S. BAUER, P.E**
NYSPE 084915

DATE: **FEBRUARY 10, 2014**

C&S PROJECT NO.: 190.514.001

RE: **SEISMIC ASSESSMENT SUMMARY**
NEW YORK STATE DEPARTMENT OF TRANSPORTATION
D031085; PIN 3501.60; I-81

BIN: **1069090 Seismic Assessment**

This memorandum summarizes the seismic assessment conducted for BIN 1069090 as part of the Interstate 81 Project in Syracuse, NY. The purpose of the assessment is to determine if seismic retrofits are warranted at the superstructure to substructure connection, and if further seismic evaluation of the structure is required. This memorandum will give the assessment results, retrofits required and recommendations for further seismic evaluation of the structure.

ASSESSMENT PROCEDURE

The seismic assessment was performed in accordance with the FHWA Seismic Retrofitting Manual for Highway Structures: Part 1 - Bridges, January 2006. As per the referenced manual, seismic assessment was performed for both lower level and upper level earthquake ground motion. The lower level earthquake ground motion has a reasonable likelihood of occurrence within the life of the bridge (50% probability of exceedance within a 75 year bridge life). The upper level earthquake ground motion has a finite likelihood of occurrence within the life of the bridge (7% probability of exceedance within a 75 year bridge life).

Values for the spectral acceleration for the Syracuse area used in the assessment are as follows:

- Lower Level Earthquake Ground Motion for a Short Period (0.2 seconds): $S_S = 0.0251$
- Lower Level Earthquake Ground Motion for a Long Period (1.0 seconds): $S_1 = 0.0076$
- Upper Level Earthquake Ground Motion for a Short Period (0.2 seconds): $S_S = 0.139$
- Upper Level Earthquake Ground Motion for a Long Period (1.0 seconds): $S_1 = 0.047$

These values are considered constant and are the same for all seismic assessments of bridges in the Syracuse area.

The Site Class is based on the soil conditions at the bridge location. It was determined that this parameter has little effect on the results of the seismic assessment because the spectral

You created this PDF from an application that is not licensed to print to novaPDF printer (http://www.novapdf.com)

acceleration values for the Syracuse area are small. Based on this, a site class of D was used for all seismic assessments of bridges in the Syracuse area.

Bridge parameters used in the seismic assessment were retrieved from the record drawings and WinBolts data.

The seismic assessment takes into account the anticipated service life, importance, and the seismic exposure of the bridge to determine a seismic retrofit category (SRC). The SRC is then used to determine seismic evaluation methods and retrofit measures. There are four SRCs, A through D. Seismic retrofit category A is the lowest category; bridges in this category do not require retrofits or further seismic evaluation. Seismic retrofit category D is the highest category; bridges in this category requiring the most rigorous seismic evaluations and retrofits.

ASSESSMENT RESULTS

The SRC for the bridge is "**C**" for lower level earthquake ground motion and "**B**" for upper level earthquake ground motion.

RETROFITS REQUIRED

Bearing replacements are not required at the abutments or piers. Seat width improvements are required at the Begin Abutment and Pier 3. Additional retrofits may be required if further seismic evaluation is needed.

RECOMMENDATIONS FOR FURTHER SEISMIC EVALUATION

No further seismic evaluation is required for lower level earthquake ground motion. For the upper level earthquake ground motion, it is recommended that the capacities of the bearings are checked as per Section 5.2 of the referenced manual.

Retrofit cost estimates will be provided after any further required seismic evaluations are completed.

You created this PDF from an application that is not licensed to print to novaPDF printer (http://www.novapdf.com)

E. Recommendations:

The purpose of this deck evaluation is to document and determine existing conditions of the deck. It will be used as a tool for developing the scope of work and cost estimates for the development and comparison of alternatives for the overall project.

The total damaged area is approximately 6% of the total deck area. Due to the age, condition and high chloride-ion content of the bridge deck concrete, the bridge deck should be rehabilitated or replaced to meet current standards and to mitigate excessive future maintenance costs.

Option 1 – Scarify and Bridge Deck Overlay
The maximum service life this option would provide is 25 years. The design life of this project is 30 years (ETC +30). This option does not meet the project objectives of obtaining 30+ years of service life.

Option 2 – Bridge Deck Rehabilitation with 100% Deep Removal
This option will involve partial depth reconstruction with top mat rebar exposure of the entire bridge deck to remove chloride contaminated concrete (100% deep removal). The existing bridge deck thickness is 9 ¼" with 3 ¼" of concrete cover over the top mat of reinforcing. The proposed partial depth reconstruction will include the addition of ¼" of concrete to provide 9 ½" bridge deck thickness. The existing top mat of reinforcing bars will be removed and replaced to accommodate the standard 3" cover of concrete. The existing non-conforming bridge railing will be removed and replaced with single-slope concrete barrier. The existing approach slabs will be rehabilitated by removing delaminated concrete and replacement with new concrete. The existing armorless bridge joints will be replaced with new armorless bridge joints. This option would provide a service life of 35 years to the bridge deck. The construction cost of this option is $ 2.03 million.

Option 3 – Bridge Deck Replacement with Cast-In-Place Concrete

This option will involve the complete demolition of the existing bridge deck, railing, bridge deck joints and approach slabs. The bridge deck will be replaced with a new concrete deck, new single-slope concrete barrier and new armorless bridge joints. The approach slabs will also be replaced. The new bridge deck will be 9 ½" standard thickness as compared to the 9 ¼" existing thickness. This option would provide a service life of 40 years to the bridge deck. The construction cost of Option 3 is $2.58 million.

Option 4 – Bridge Deck Replacement with Pre-cast Concrete Deck Panels

This option will have the highest construction cost of all of the options however; traffic control costs may be lower due to reduced construction time. Comparison of accelerated construction to conventional construction is beyond the scope of work for this project at this time.

IN-DEPTH INSPECTION REPORT

D031085 P.I.N. 3501.60

B.I.N. 1069100

TEAM LEADER	Andrew J. Fuller, P.E.	59848
		NYSPE LICENSE #

ASSISTANT TEAM LEADER	Jeffrey M. Reina, PE
ASSISTANT TEAM LEADER	Logan Bessel
ASSISTANT TEAM LEADER	Jerome Getter

FEATURE CARRIED	I - 81 Southbound to I - 481 Eastbound Ramp
FEATURE CROSSED	I – 81 Northbound

DATE FIELD WORK BEGAN	August 12, 2013
DATE FIELD WORK COMPLETED	March 17, 2014

TABLE OF CONTENTS

- TP 349 & 350
- IN-DEPTH CONDITION DOCUMENTATION
- IN-DEPTH PHOTO DOCUMENTATION
- ASBESTOS REPORT

TP 349 & TP 350

BRIDGE ELEMENT RATINGS

Inspection Date: 9/27/2012 RC: 33 BIN: 1069100

Bridge Ratings

Carried: I81 SB TO I481 EB Crossed: 81I 81I33032014 CheckValue: 1,808,322,963

Inspection Agency: 10 - NYSDOT Type of Inspection: 1 - BIENNIAL
GTMS: 302 -- Steel - Stringer/Multi-Beam or Girder
POSTINGS: See Gen Rec Page 1 for Postings at time of inspection.
Further Investigation Needed: No
State Highway Number: 64007 Milepoint: 0 AADT/Yr: 4039 / 2000
Orientation: 8 - Northwest Political Unit: 2055 - City of SYRACUSE Year Built: 1980
Total Spans: 3 Ramp Bridge Attached To Span: NA BIN: NA
General Recommendation: 6 Computed Condition Rating: 5.125

Abutment Ratings:	Beg Abut	End Abut
Joint with Deck	4	8
Bearings, Bolts, Pads	4	4
Seats and Pedestals	5	5
Backwall	4	4
Stem (Breastwall)	5	5
Erosion or Scour	5	5
Footings	9	9
Piles	8	8
Recommendation	5	5

Wingwall Ratings:	Beg Abut	End Abut
Walls	6	5
Footings	9	9
Erosion or Scour	6	6
Piles	8	8

Channel Ratings:	Channel
Stream Alignment	8
Erosion and Scour	8
Waterway Opening	8
Bank Protection	8

Approach Ratings:	Approaches
Drainage	5
Embankment	6
Settlement	5
Erosion	5
Pavement	8
Guide Railing	3

Number of Flags Issued:

RED: 0 Yellow: 0 Safety: 1

Vulnerability Reviews Recommended: 1=Yes, 2=No, 3=NA, X=NotActive

Hydraulic: 3	Overload: X	Steel: 2
Collision: 2	Concrete: X	Seismic: X

Inspector's Signature: CheckValue: 1,808,322,963 Date: 9/27/2012

Bruce Opalka,PE () (Inspector ID:3000038)

Signed copy of this inspection report is available in the appropriate NYSDOT Regional Office

Reviewed By: Date: 11/16/2012

James R. Manning,PE () (QC ID:3000023)

Signed copy of this inspection report is available in the appropriate NYSDOT Regional Office

Inspection Date: 9/27/2012 RC: 33 BIN: 1069100

Span Ratings

Carried: I81 SB TO I481 EB Crossed: 81I 81I33032014 CheckValue: 1,808,322,963

Deck Element Ratings:	001	002	003
Wearing Surface	4	4	4
Curbs	5	5	4
Sidewalks, Fascias	4	4	4
Railings, Parapets	5	5	5
Scuppers	8	8	8
Gratings	8	8	8
Median	8	8	8
Mono Deck Surface	6	4	6

Superstructure Ratings:	001	002	003
Structural Deck	6	6	6
Primary Members	6	6	6
Secondary Members	6	6	6
Paint	6	6	6
Joints	5	5	8
Recommendation	6	6	6

Pier Ratings:	001	002	003
Bearings, Bolts, Pads	5	4	8
Pedestals	6	5	8
Top of Cap or Beam	6	6	8
Stem Solid Pier	8	8	8
Cap Beam	6	6	8
Pier Columns	6	6	8
Footings	9	9	8
Erosion or Scour	6	6	8
Piles	8	8	8
Recommendation	6	5	8

Utility Ratings:	001	002	003
Lighting	8	8	8
Sign Structure	8	8	8
Utilities and Support	8	8	8

Field Notes:

Field Date	Arrival	Departure	Temp (C)	Temp (F)	Weather Conditions
7/17/2012	11:00:00 AM	12:00:00 PM	35	95	sunny
8/3/2012	1:00:00 AM	3:00:00 PM	29	85	Hot Sunny
9/27/2012	1:00:00 AM	3:00:00 PM	21	70	Sunny

IN-DEPTH CONDITION DOCUMENTATION

IN DEPTH INSPECTION REPORT

BIN 1069100

Visual Inspection

The bridge was originally built under contract D95042 (Nov. 1975). Under contract D96534 (Aug. 1980) there was some approach work done such as pavement restoration and guide railing. There were two painting contracts referred to in the BIN folder; D254816 (Oct. 1993) and D260795 (May, 2008).

Cracks, spalls, and other field observations are shown on the plans. Below is a brief summary of conditions for each feature.

Superstructure

Deck – See Bridge Deck Evaluation Report.

Steel – See Structural Steel Inspection Summary.

Bearings – Bearing elements typically have minor rust scale.

Substructure

North Abutment – Concrete backwall contained minor isolated areas of delaminated concrete and cracking. All pedestal locations have only minor isolated cracking and delamination, however, concrete debris from repairs to the abutment was never removed and now rests across the bridge seat and pedestals. The northeast wingwall contained isolated areas of delaminated concrete with efflorescence.

North Pier (Concrete Cap Beam) – The North end of the cap beam contains an area of delaminated concrete and cracking. All pedestal locations appear to be in good condition with only minor isolated cracking and delamination. The two columns appear to be in good sound condition with only small areas containing isolated map-cracking and delamination.

South Pier (Steel Cap Beam) – The West concrete column of the pier has areas of delamination on the Southwest and Northwest corners. The steel cap-beam contained 6” square areas of surface rust which forced the paint to flake off the steel.

South Abutment – Concrete backwall contained areas of spalled concrete across the top and cracking throughout the wall. Concrete debris from the backwall and joint repairs has fallen around the bridge seat and pedestals below. All pedestal locations appear to be in good condition with only minor isolated cracking and delamination. The southwest wingwall contains areas of cracking with efflorescence in and adjacent to the cracks.

STRUCTURAL STEEL INSPECTION SUMMARY

BIN 1069100

Special Emphasis Inspection Required

Non-Redundant/Fracture Critical Members – Yes
Pin and Hangers – No
Fatigue-Prone Welds – Yes
Non-Categorized Fatigue-Prone Details – No
Other (Specified in Text) – No

Special Emphasis Details

Steel cap beam: 100% hands-on inspection of the non-redundant element was performed. No significant deterioration was found.

Gusset plates are welded to bottom, tension flange of girders and are not exempt because of being curved girders. 100% hands-on inspection of fatigue prone details was performed. No cracks were found.

Overall Steel Condition

The overall general steel condition is good, however, there is some pitting in the fascia beams probably due to road splash and snow melt. The pitting is a little more concentrated at the ends of the bridge. The 5% loss for age of steel will more than cover loss due to pitting.

The steel capbeam was entered and thoroughly inspected from end to end. Minor surface rust was found in spot locations along the edges of welds. Higher concentrations of surface rust exist at each end of the pier cap due to moisture drip through the beveled corners of the transverse stiffeners.

Paint

The paint appears to be in good condition. The structure was painted in 2008 under contract D260795.

Section Loss

Due to the age of the steel a blanket 5% section loss should be used in load rating.

1069100

D95042

FED RD REG. NO.	STATE	FEDERAL AID PROJECT NO.	SHEET NO.	TOTAL SHEETS
	NEW YORK	I-IO-481-2(74) I-III-81-2(126)	300	571

INTERSTATE ROUTE CONNECTION 571
FOREST INTERCHANGE - JAMESVILLE

CAPITAL PROJECT IDENTIFICATION NO. 3007.00.III

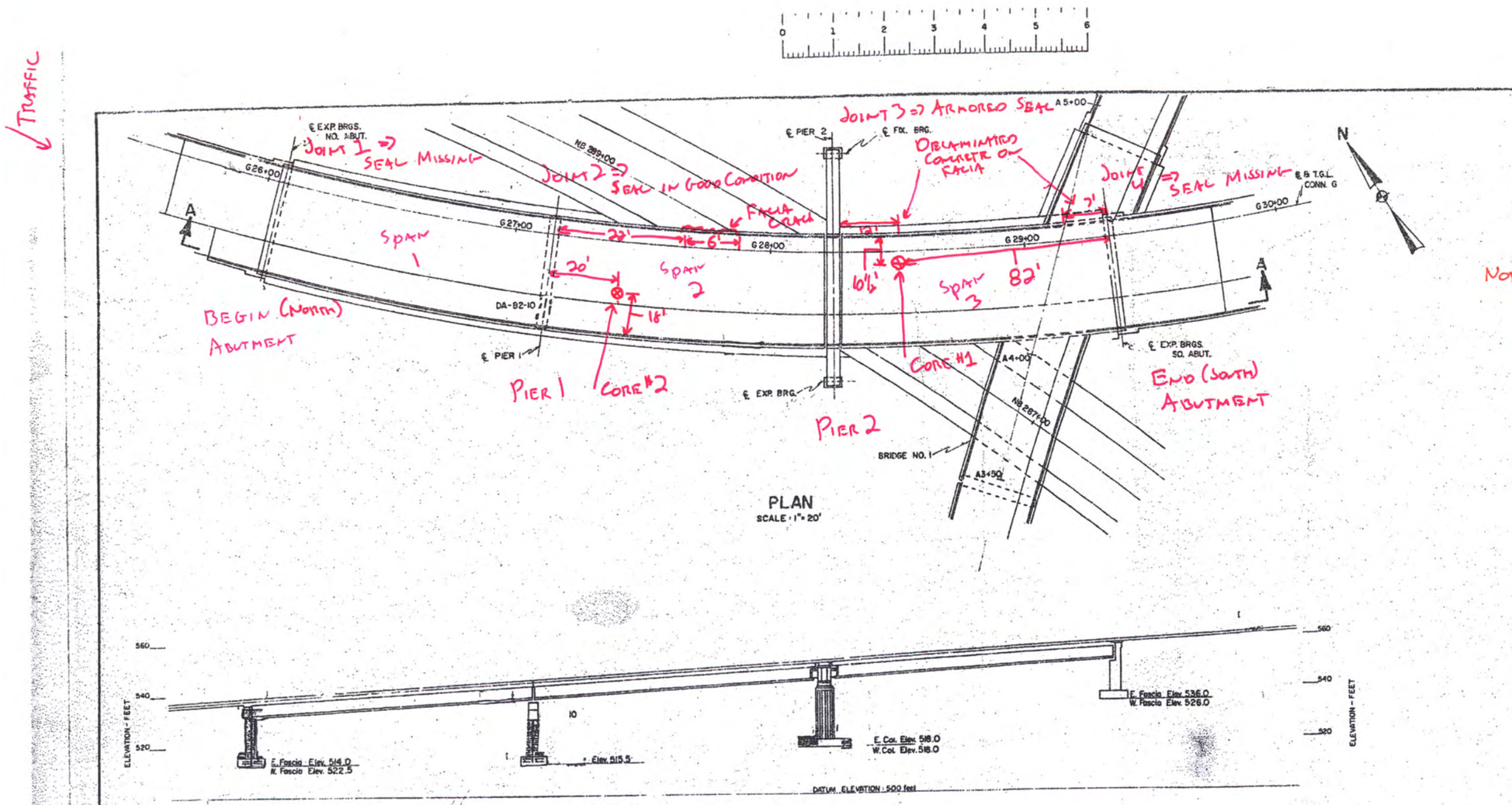

PLAN
SCALE: 1" = 20'

NOTES: CONCRETE DECK APPEARS TO BE IN GOOD CONDITION WITH TYPICAL WEAR AND POLISHED STONE.

⊕ ⇒ CORE LOCATION
⇒ CRACK
⇒ DELAMINATION

SECTION A-A
(BORINGS PROJECTED TO SECTION LINE)
SCALE: 1" = 20'

REFERENCE PLANS

Preliminary Structure Plans Used for Analysis were

Prepared By: Goodkind & O'Dea

Scale: 1" = 20' Date: April 1974

Prepared By: R L Warrender
Drawn By: [illegible]
Dwg. Reviewed By: J J Mori
Checked By: Robert C Houghton

GENERAL NOTES

The subsurface explorations shown hereon were made between April 26, 1968 and July 30, 1974 by the Regional Soils Section.

1) General soil and rock (where encountered) strata descriptions and indicated boundaries are based on an engineering interpretation of all available subsurface information by the Soil Mechanics Bureau and may not necessarily reflect the actual variation in subsurface conditions between borings and samples. Detailed data and field interpretations of conditions encountered in individual borings are shown on the subsurface exploration logs.

2) The observed water levels and/or conditions indicated on the subsurface profiles are as recorded at the time of exploration. These water levels and/or conditions may vary considerably, with time, according to the prevailing climate, rainfall or other factors and are otherwise dependent on the duration of and methods used in the explorations program.

3) Sound engineering judgment was exercised in preparing the subsurface information presented hereon. This information was prepared and is intended for State design and estimate purposes only. Its presentation on the plans or elsewhere is for the purpose of providing intended users with access to the same information available to the State. This subsurface information interpretation is presented in good faith and is not intended as a substitute for personal investigation, independent interpretations or judgment of the Contractor.

4) All structure details shown hereon are for illustrative purposes only and may not be indicative of the final design conditions shown in the contract plans.

5) Footing elevations shown are as indicated at the time of this drawing's preparation.

LEGEND

The following tables summarize the descriptive information used on this profile.

Density (Non Plastic Soils)	No. of blows per foot of penetration of 2 inch O.D. sampler using a 300 lb drop hammer, 18 inch fall.
Very Loose	0-3
Loose	3-8
Medium Compact	8-20
Compact	20-35
Very Compact	over 35
Consistency (Plastic Soils)	
Very Soft	0-2
Soft	2-6
Firm	6-12
Stiff	12-20
Hard	over 20

System For Describing Estimated Amounts of Soil Component Materials

Word Designation	Percentage Range of Soil Component in Stratum
Primary component is capitalized	50 or more
and	40 to 50
some	10 to 40
trace	10 or less

SYMBOLS

DH - Drill Hole
Observed Water Level
Medium Compact to Very Compact Brown SAND, with some Silt and Gravel, with a trace of Clay.
SHALE
LIMESTONE

NOTES:
1. No ground water observed in Drill Holes B2-2 through B2-8, F1-24, F1-26 and DA-B2-10.
2. Existing ground surface not shown on section due to elevation differences of ground surface between East and West sides of bridge.

R1-8/21/74-Added Drill Hole DA-B2-10.
R2-9/4/75 Footing Elevations changed

APPROVED JUNE 10 1974
L. H. Moore, Jr.
DIRECTOR
SOIL MECHANICS BUREAU

REGION NO. 3
COUNTY ONONDAGA
DWG. NO. 3 SM 1841 R-1

STATE OF NEW YORK
DEPARTMENT OF TRANSPORTATION
DIVISION OF CONSTRUCTION

GENERAL SUBSURFACE PROFILE FOR BR. NO. 2, CONNECTOR "G" OVER I-81 N.B.

Dwg. No. 4 DRAWING NO. 1 OF 1

300

DIN 1964100

D85042

FED. ROAD SEC. NO.	STATE	FEDERAL AID PROJECT NO.	SHEET NO.	TOTAL SHEETS
1	N.Y.	I-(81-2(129) N-(81-2(1183)	12	371

INTERSTATE ROUTE CONNECTION 511
FOREST INTERCHANGE – JAMESVILLE
ONONDAGA COUNTY

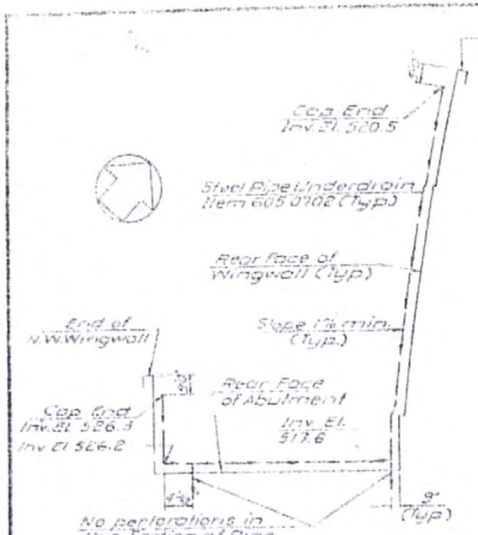

UNDERDRAIN PLAN AND FLOW DIAGRAM
Not to Scale

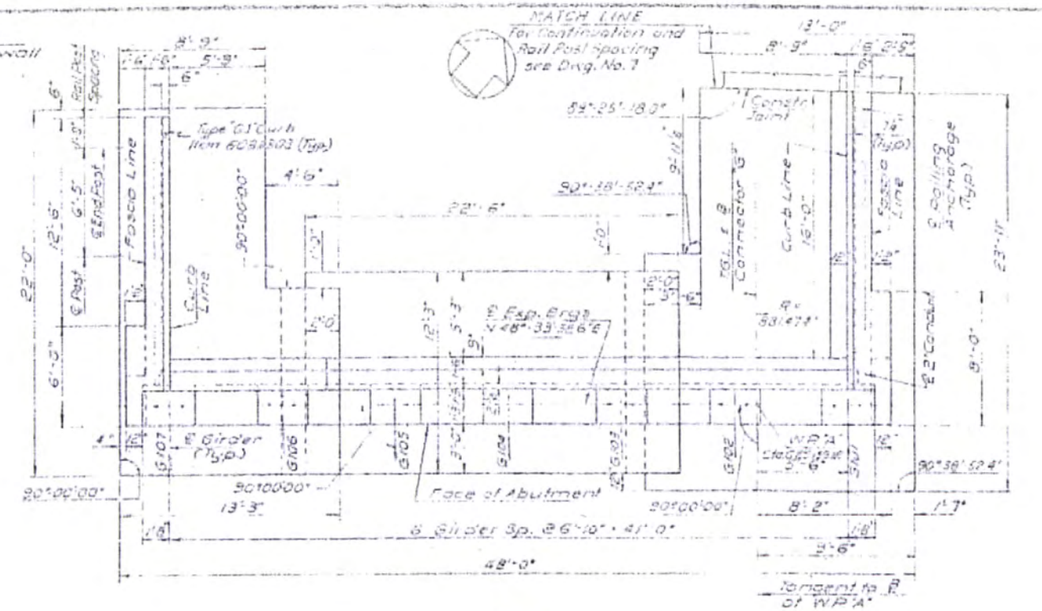

PLAN

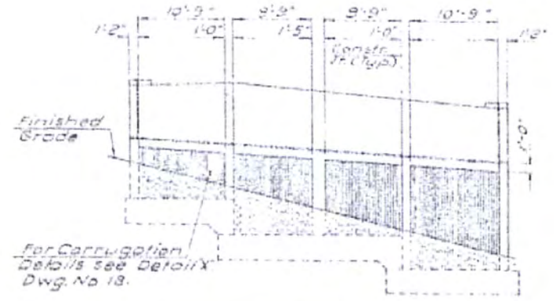

AESTHETIC TREATMENT AT ABUTMENT
Scale 1/8"=1'-0"

NOTE:
Railing not shown.

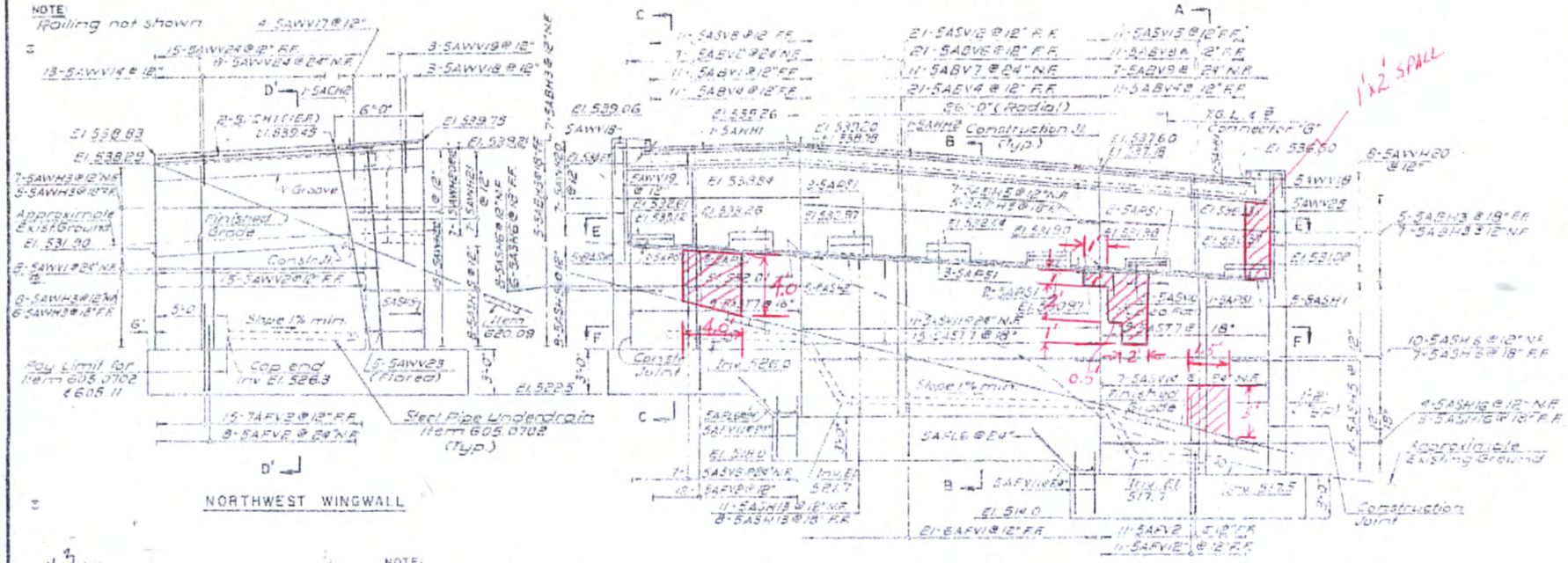

NORTHWEST WINGWALL

ELEVATION

NOTE:
Inverts shown are at Front Face of Abutment.
Bridge Seat Elevations shown are at Front Face of Backwall.

REFERENCES:
1. For Sections A-A, B-B and C-C see Dwg No 11.
2. For Section D-D, see Dwg. No. 15.
3. For Section E-E and F-F, see Dwg. No. 13.
4. For Aesthetic Treatment of Wingwall, see Dwg. No. 11.
5. For Quantity of Reinforcing in Specific Pours and Bar List, see Dwg. Nos 35 to 36.
6. For Concrete Item Numbers and Quantities in Specific Pours, see Dwg. Nos 14, 15 and 17.
7. For Header, Pedestal and V-Groove Details, see Dwg. No. 12.
8. For Substructure Notes, see Dwg No CD-1
9. For Details of Pay Limits, Keyways, Waterstops, Underdrain Outlet, and Granite Curb, see Dwg. No. CD-8.
10. For Beginning and end of Bridge Stations see Dwg No. 1.

BRIDGE NO. 2
CONNECTOR "G" OVER I-81 N.B.
NORTH ABUTMENT
BEGIN ABUTMENT

Prepared and reviewed in the office of
GOODKIND & O'DEA, INC.
Consulting Engineers
Date 12/1/75

DWG. NO.	SCALE	DATE	GOODKIND & O'DEA, INC. CONSULTING ENGINEERS
6	1/8" & 1/4" as noted	Nov. 1975	

163146

302

1069100

D95042

FED. ROAD REG. NO.	STATE	FEDERAL AID PROJECT NO.	SHEET NO.	TOTAL SHEETS
1	N.Y.	I-IG-481-2(74) I-IG-81-2(126)	303	571

INTERSTATE ROUTE CONNECTION 571
FOREST INTERCHANGE - JAMESVILLE
ONONDAGA COUNTY

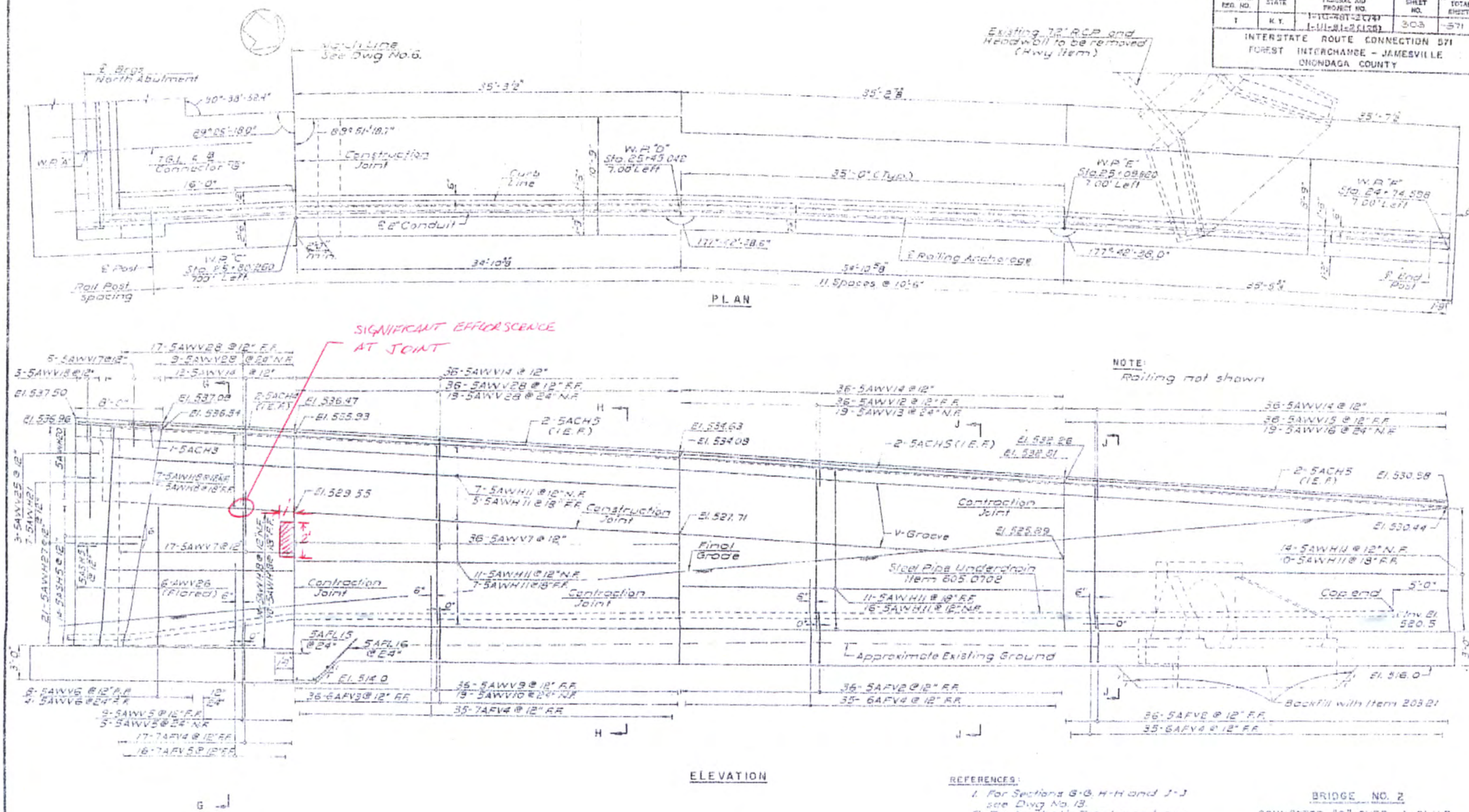

REFERENCES:
1. For Sections G-G, H-H and J-J see Dwg No. 13.
2. For Aesthetic Treatment, see Dwg No. 11
3. For Additional References, see Dwg No. 6.

BRIDGE NO. 2
CONNECTOR "G" OVER I-81 N.B.
NORTHEAST WINGWALL

Designed and Recommended
Date 12/1/75
Consulting Engineers

DWG. NO.	SCALE	DATE	
7	1"=10'	Nov. 1975	GOODFIELD & O'DEA, INC. CONSULTING ENGINEERS

303

BIN 1069100

D950412

SEC. ROUTE DWG. NO.	STATE	FEDERAL AID PROJECT NO.	SHEET NO.	TOTAL SHEETS
1	N.Y.	I-IC-2451-2(7)87 I-IC-2451-3(7)861	3-4	371

INTERSTATE ROUTE CONNECTION 571
FOREST INTERCHANGE - JAMESVILLE
ONONDAGA COUNTY

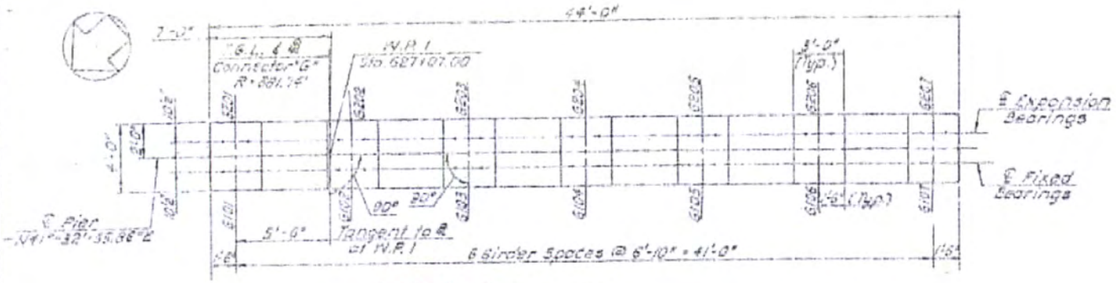

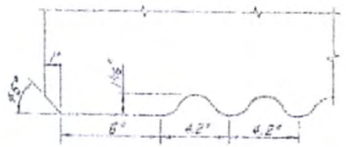

DETAIL X
Scale: 1"=4"

CONCRETE POUR TABLE (CY)

POUR	ITEM 501.01	ITEM 501.02
S. Footing	—	87.25
N. Footing	—	87.25
S. Column	9.72	—
N. Column	9.79	—
Cap	27.30	—
Pedestals	2.43	—

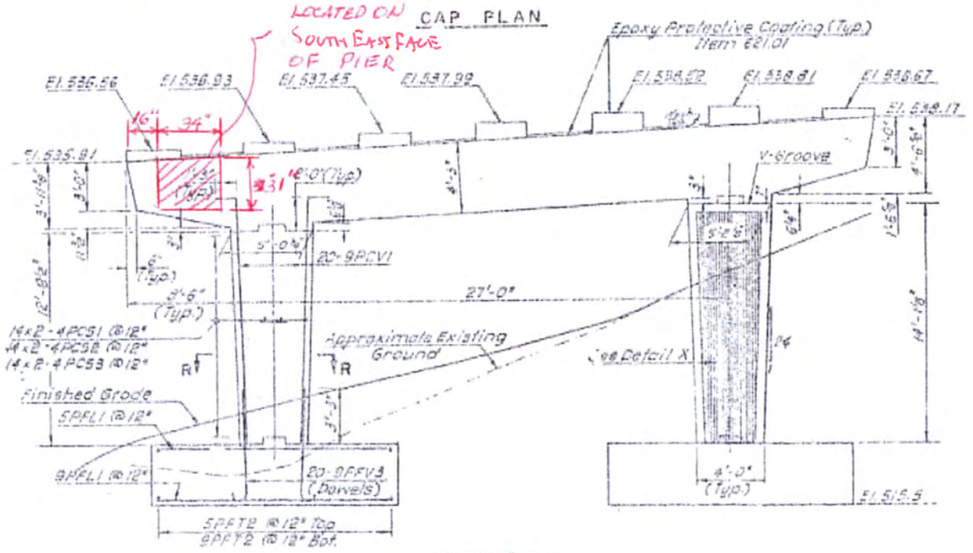

ELEVATION
NORTH WEST FACE

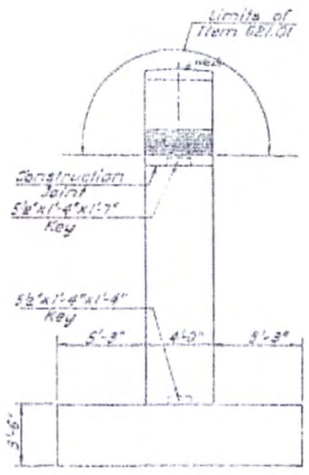

END ELEVATION

NOTES:
NORTH WEST FACE - NO DISTRESS NOTED.

NOTES:
1. For Min. Cover of Reinforcing Bars see General Notes, see Dwg. No. CD-1 except the Cover shall be 3½" at the Aesthetic Treatment.
2. For Design purposes the Foundation Pressure does not exceed 3.0 Tons per square foot.

REFERENCES:
1. For Reinforcing Quantities in Specific Pours and Bar List, see Dwg. No. 37
2. For V-Groove Detail, see Dwg. No. 12

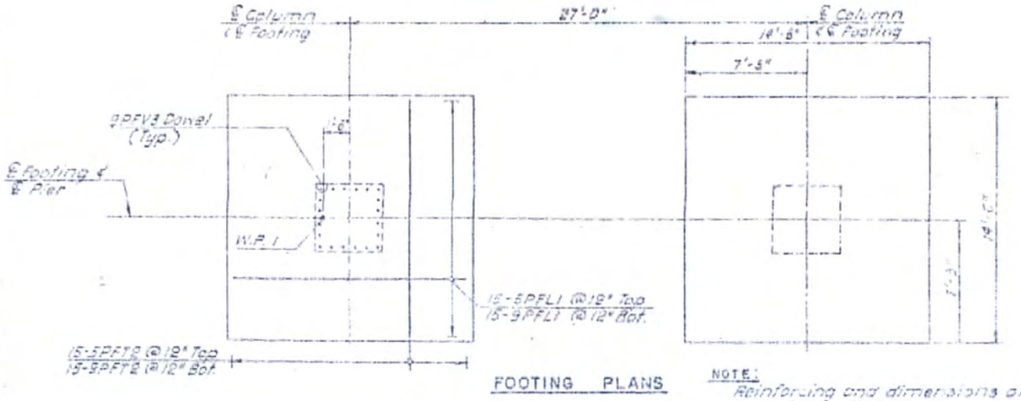

FOOTING PLANS

NOTE:
Reinforcing and dimensions are typical for both footings.

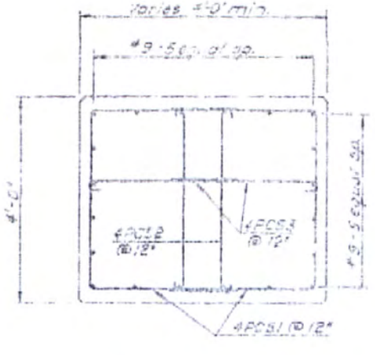

SECTION R-R
Scale: ¾"=1'-0"

BRIDGE NO. 2
CONNECTOR "G" OVER I-81 N.B.

PIER 1

Prepared under the supervision of: GOODKIND & O'DEA, INC. Consulting Engineers
Date 12/1/75

DWG. NO.	SCALE	DATE	GOODKIND & O'DEA, INC. CONSULTING ENGINEERS
18	3/4"=1'-0" (24 on 36)	NOV. 1975	

BIN 1069100

D950+2

ITD. ROAD SEC. NO.	STATE	FED'L AID PROJECT NO.	SHEET NO.	TOTAL SHEETS
1	N.Y.	I-081-3(121)271	314	571

INTERSTATE ROUTE CONNECTION 571
FOREST INTERCHANGE - JAMESVILLE
ONONDAGA COUNTY

CONCRETE POUR TABLE (CY)

POUR	ITEM 601.01	ITEM 601.02
S. Footing	—	33.33
N. Footing	—	33.33
S. Column	16.57	—
N. Column	20.35	—
Pedestals	1.04	—

PLAN

Target @ W.P. 2

S.B.L. (℄ Connector "G" R=2014.47')

℄ East Column

℄ Girder Connections

℄ Pier 2 N 08° 22' 56" E

℄ Fix. Bearings

38'-6"

33'-0"

92'-0"

6 Girder Spaces @ 6'-10" = 41'-0"

14'-0"

℄ West Column

W.P. 2 Station 1100

S301 S302 S303 S304 S305 S306 S307

S601 S602 S603 S604 S605 S606 S607

2'-0" 5'-0"

℄ Column & ℄ Bearing Fixed

℄ Column & ℄ Bearing Expansion

2'-0"

℄ Connector "G"

X Z Y

El. 549.08

El. 540.35

FULLY INSPECTED - NO PROBLEMS

W (1.5 PSI)

Finished Grade

22-10PCV1

19-4"x6"-4PCS1 @ 6" 19-4"x6"-4PCS2 @ 12" 19-4"x6"-4PCS3 @ 12"

5PFL1 @ 12"

4'-2"

2'-6"

2'-6"

24"ø Steel Column 6-6PCL1

1"ø Roughened or Sweged Anchor Bolt, set 6" into masonry (Typ.)

10-6PCT2

PEDESTAL DETAIL
Scale: 3/8"=1'-0"

Actual Vertical Clearance

Approximate Existing ℄ Finished Grade

Approximate Existing Ground

28-10PFV1 (Dowels)

4" Cover (Typ.)

4PFT8 @ 12" 6PFT1 @ 12"

Top Bar

7PFL1 @ 6"

El. 513.0

℄ Column & ℄ Footing

38'-6"

49'-6"

15'-0"

7'-6"

7'-6"

15'-0"

W.P. 2

℄ Pier 2 & ℄ Footings

10PFV1 Dowel (Typ.)

FOOTING PLANS

℄ Column & ℄ Footing

16-5PFT5 @ 12" Top 16-8PFT1 @ 12" Bot.

16-5PFL1 @ 12" Top 30-7PFL1 @ 6" Bot.

NOTE: For Design Purposes the Foundation Pressure does not exceed 3 tons per square foot.

#10 bars (7 Eq. spaces)

2" Cover

4PCS2 @ 12"

4PCS1 @ 12"

4½" Cover

4PCS3 @ 12"

6'-0"

SECTION W-W
Scale: 3/4"=1'-0"

ELEVATION
NORTH WEST FACE

22-10PCV2

20"

45°

El. 513.0

(LOCATED ON SOUTHEAST SIDE)

22"x2"-4PCS1 @ 12" 22"x2"-4PCS2 @ 12" 22"x5"-4PCS3 @ 12"

Limits of Item 621.01

East Column

West Column

10'-1"

6'-1"

See Detail X Drg. No. 18

24"

17'-0"

6'-7"

END ELEVATION

REFERENCES:
1. For Reinforcing Quantities in Specific Pours and Bar List, see Dwg. No. 37
2. For Sections X-X and Y-Y, see Dwg. No. 61
3. For Section Z-Z, see Dwg. No. 31

NOTES:
NORTH WEST FACE: NO DISTRESS NOTED

BRIDGE NO. 2
CONNECTOR "G" OVER I-81 N.B.
PIER 2

Prepared and Recommended for Approval
GOODKIND & O'DEA, INC.
Consulting Engineers

Date 3/4/75

DWG. NO.	SCALE	DATE	
20	1/4" for 1" (Typ.) unless noted	NOV. 1975	GOODKIND & O'DEA, INC. CONSULTING ENGINEERS

Submitted by: GOODKIND & O'DEA, INC. Consulting Engineers

314

PIER CAP INTERIOR

1069100

D95042

FED. ROAD REG. NO.	STATE	FEDERAL AID PROJECT NO.	SHEET NO.	TOTAL SHEETS
1	N.Y.	I-IU-481-2(74) I-IU-81-2(126)	~~317~~	571

INTERSTATE ROUTE CONNECTION 571
FOREST INTERCHANGE - JAMESVILLE
ONONDAGA COUNTY

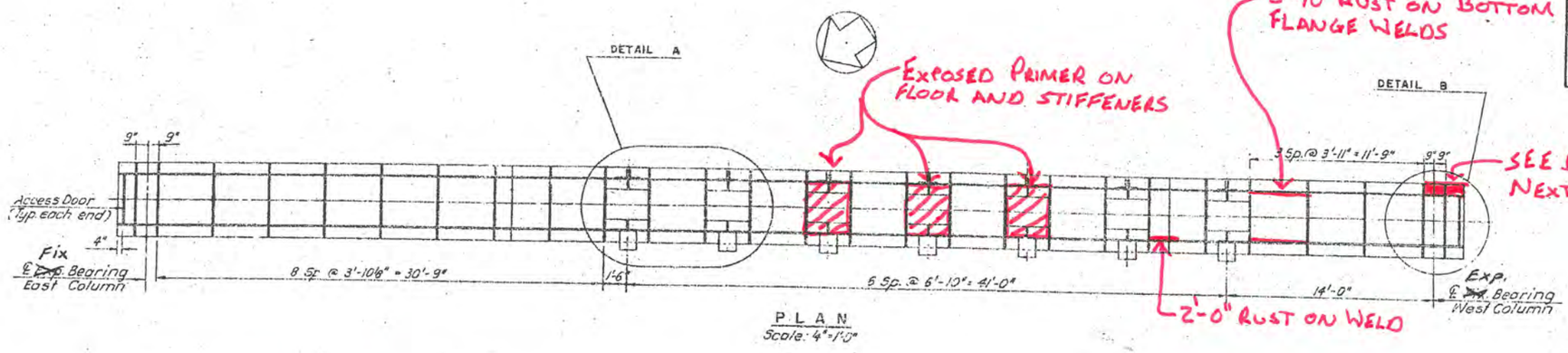

PLAN
Scale: 4"=1'-0"

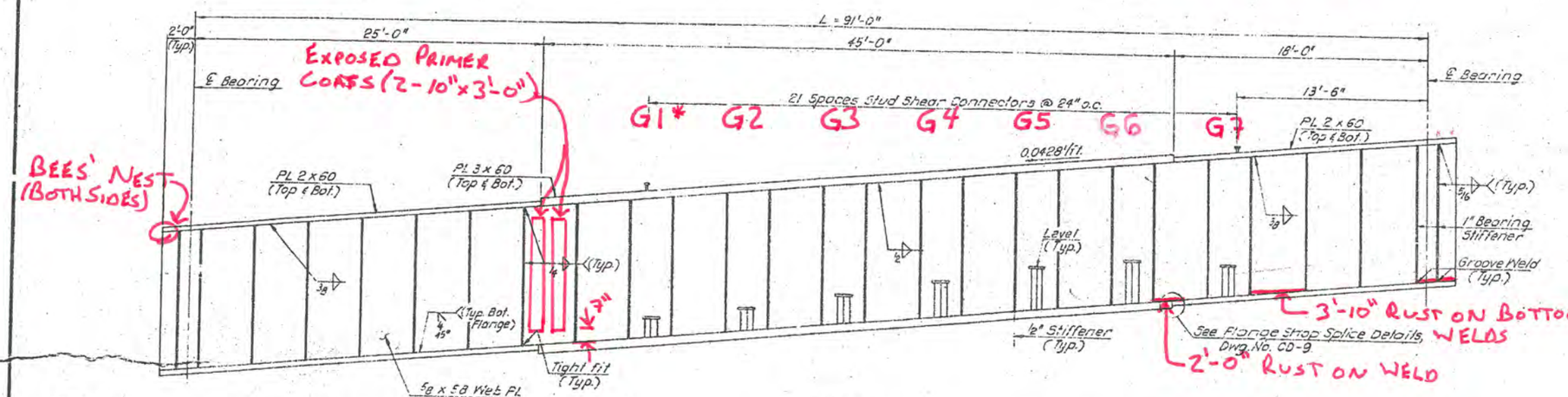

NOTES:
All Cap Beam Flanges, Webs, Stiffeners, Bearing Base Plates and Access Door shall be High Strength Steel in accordance with A.S.T.M. Designation A588.
All Stiffeners shall be vertical under full dead load.

REFERENCES:
1. For Details A and B, see Dwg. No. 22
2. For Girder Reactions, see Dwg. No. 29

NOTE A:
Fabricator has option of reversing web to flange welds (Fillet on bottom and Groove on top) or using Groove welds for both top and bottom flanges.

ELEVATION
Scale: Hor. 4"=1'-0" Vert. 2"=1'-0"

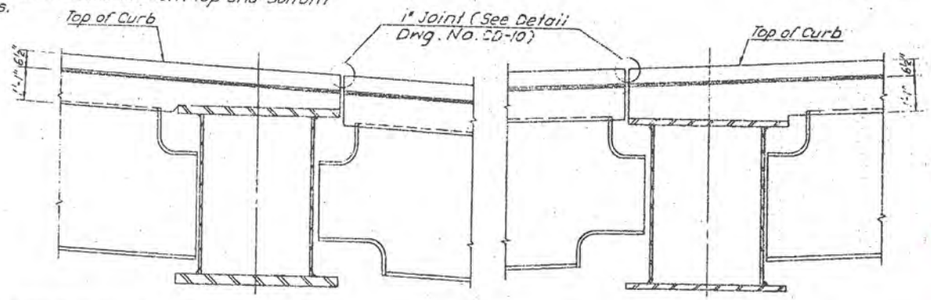

NOTE: Railing not shown

SECTION X-X
Scale: 2"=1'-0"

SECTION Y-Y
Scale: 2"=1'-0"

	LOCATION		℄ BRG. EAST COLUMN	.28L	.38L	.45L	.53L	.61L	.69L	.76L	.80L	.84L	℄ BRG. WEST COLUMN
CAMBER TABLE	STEEL CAP BEAM D.L.		0.00	0.02	0.02	0.02	0.02	0.02	0.02	0.01	0.01	0.01	0.00
	SUPERSTRUCTURE D.L.		0.00	0.14	0.17	0.18	0.19	0.18	0.16	0.13	0.12	0.10	0.00
	VERTICAL CURVE		0.00	0.00	0.00	0.00	0.00	0.00	0.00	0.00	0.00	0.00	0.00
	TOTAL		0.00	0.16	0.19	0.20	0.21	0.20	0.18	0.14	0.13	0.11	0.00
MOMENT AND SHEAR TABLE	STEEL CAP BEAM D.L.	MOMENT	0.0	1164.1	1368.8	1454.1	1467.6	1405.5	1267.5	1054.0	943.3	766.8	0.0
		SHEAR	61.6	31.6	18.6	7.5	3.6	14.7	25.7	36.7	41.5	46.4	63.2
	SUPERSTRUCTURE D.L.	MOMENT	0.0	10050.8	13267.0	15181.6	16086.1	15997.8	14872.3	12669.6	11277.6	9291.6	0.0
		SHEAR	402.1	402.1	402.1	276.4	128.6	161.0	318.6	490.8	493.9	663.7	663.7
	LIVE LOAD	MOMENT	0.0	3113.0	4109.1	4694.5	4936.3	4807.1	4346.7	3668.8	3245.2	2643.6	0.0
		SHEAR	124.5	124.5	124.5	92.8	56.6	72.1	120.4	156.6	157.0	188.8	188.8

ALL MOMENTS AND SHEARS INCLUDE IMPACT; MOMENTS ARE EXPRESSED IN FOOT-KIPS; SHEARS ARE EXPRESSED IN KIPS; CAMBERS ARE EXPRESSED IN FEET.

* GIRDER ORIENTATION LABELLED OPPOSITE TO BIENNIAL INSPECTION REPORT ORIENTATION.

BRIDGE NO. 2
CONNECTOR "G" OVER I-81 N.B.
PIER 2
STEEL CAP BEAM DETAILS-I

In Charge of: J.L. Gerstenslager
Designed by: J.L. Gerstenslager
Design Checked by: E. Bauernfeind
Detail Drawn by: J.L. Gerstenslager
Detail Checked by: [illegible]

Prepared and recommended
GOODKIND & O'DEA, INC.
Consulting Engineers
Date 12/1/75

DWG. NO.	SCALE	DATE	GOODKIND & O'DEA, INC. CONSULTING ENGINEERS
21	As noted	Nov. 1975	

PIER CAP INTERIOR

1069100 D95042

FED. ROAD REG. NO.	STATE	FEDERAL AID PROJECT NO. ~~I-IG-181-2(74)~~ I-UI-81-2(126)	SHEET NO.	TOTAL SHEETS
1	N.Y.		318	571

INTERSTATE ROUTE CONNECTION 571
FOREST INTERCHANGE - JAMESVILLE
ONONDAGA COUNTY

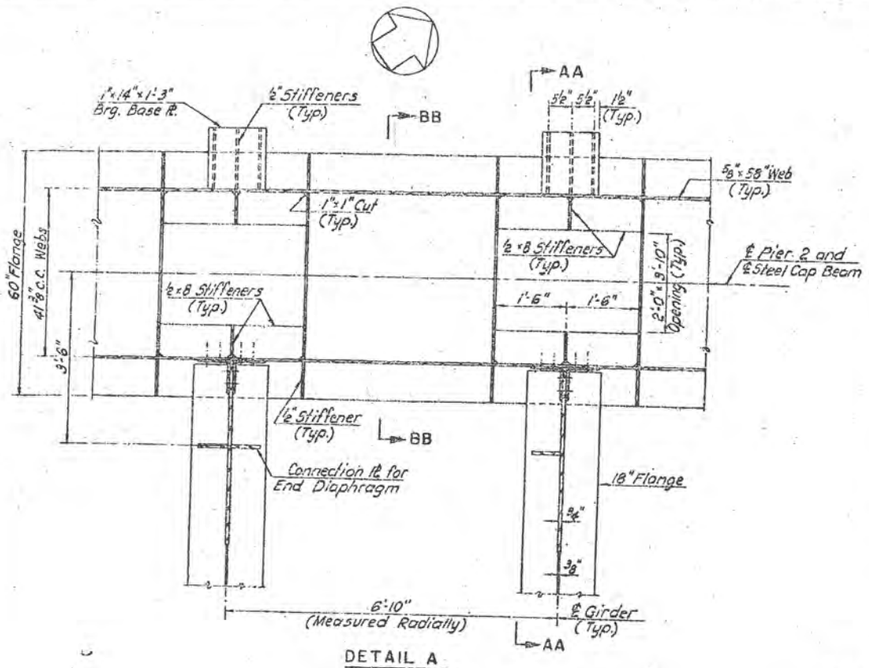

DETAIL A
Scale: 3/4"=1'-0"

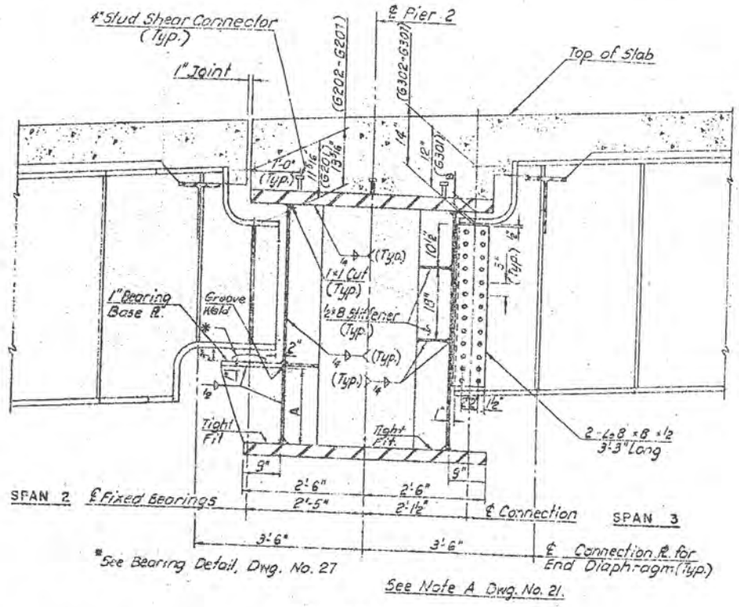

SECTION AA-AA
Scale: 3/4"=1'-0"

FABRICATION DIMENSIONS		
	A	B
G 201	8 13/16"	-
G 202	9 5/8"	-
G 203	1'-0 3/8"	-
G 204	1'-3 5/16"	-
G 205	1'-6 3/16"	-
G 206	1'-6 3/16"	-
G 207	1'-1"	-
G 301	-	1'-0 7/8"
G 302	-	11 7/8"
G 303	-	9 1/16"
G 304	-	6 3/16"
G 305	-	3 3/8"
G 306	-	3 5/8"
G 307	-	8 13/16"
See Note below		

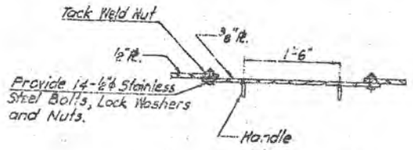

SECTION EE-EE
Scale: 1"=1'-0"

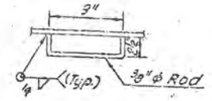

HANDLE DETAIL
Scale: 1½"=1'-0"

NOTE:
Any differences between the actual fabricated camber of the steel cap beam and the computed camber as tabulated on Dwg. No. 21 shall be taken up by adjusting dimensions A and B. Dimension A shall be adjusted by subtracting the over camber or adding the under camber. Dimension B shall be adjusted by adding the over camber or subtracting the under camber. Adjustments shall be made prior to welding the steel bearing seat for Span 2 and drilling the holes in the Box Girder Web for Span 3.

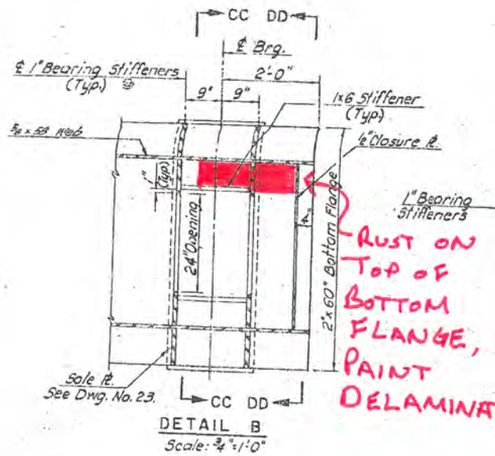

DETAIL B
Scale: 3/4"=1'-0"

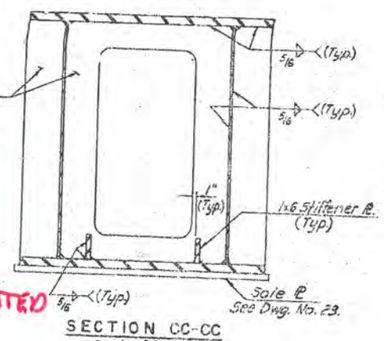

SECTION CC-CC
Scale: 3/4"=1'-0"

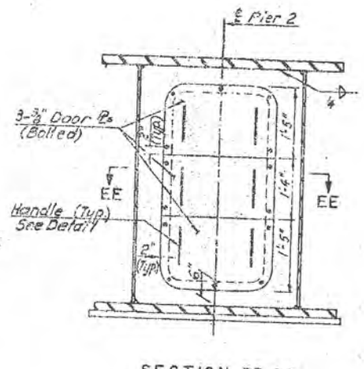

SECTION DD-DD
ACCESS DOOR DETAIL
Scale: 3/4"=1'-0"

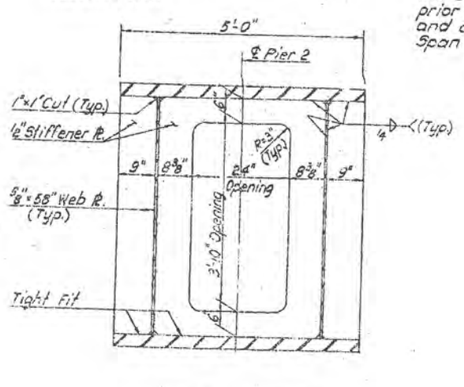

SECTION BB-BB
Scale: 3/4"=1'-0"

BRIDGE NO. 2
CONNECTOR "G" OVER I-81 N.B.
PIER 2
STEEL CAP BEAM DETAILS - II

Prepared and recommended
GOODKIND & O'DEA, INC.
Consulting Engineers
Date 12/1/75

DWG. NO.	SCALE	DATE	GOODKIND & O'DEA, INC. CONSULTING ENGINEERS
22	As noted	Nov. 1975	

BIN 1069100

D-950-42

FED. ROAD REF. NO.	STATE	FEDERAL AID PROJECT NO.	SHEET NO.	TOTAL SHEETS
1	N.Y.	I-781-1(21)20(247) I-781-1(21)20(261)	26A	97

INTERSTATE ROUTE CONNECTION 571
FOREST INTERCHANGE – JAMESVILLE
ONONDAGA COUNTY

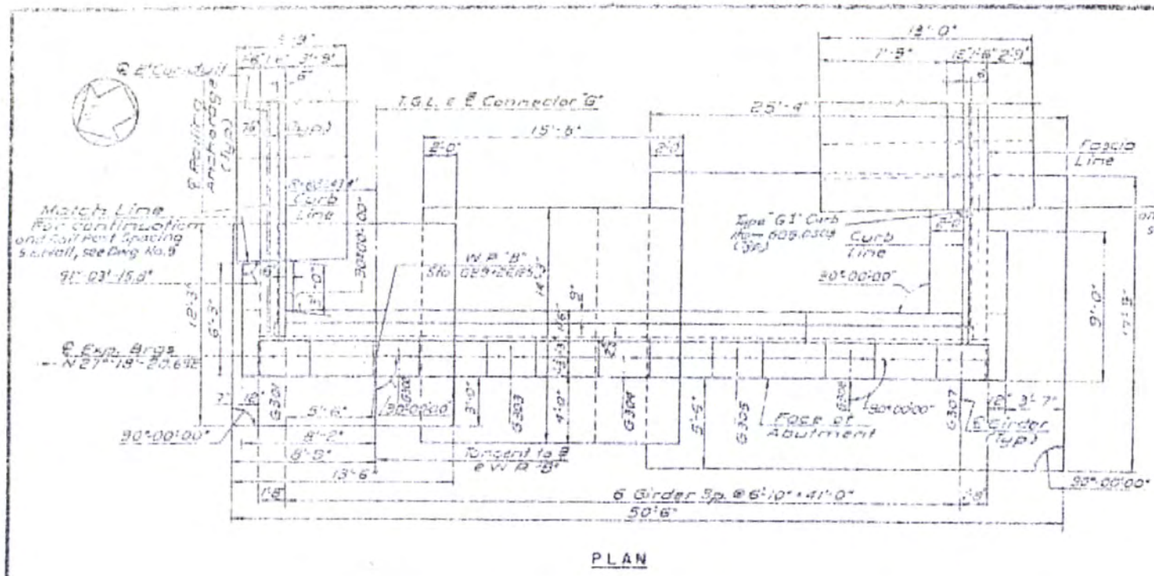

PLAN

UNDERDRAIN PLAN AND FLOW DIAGRAM
Not to Scale

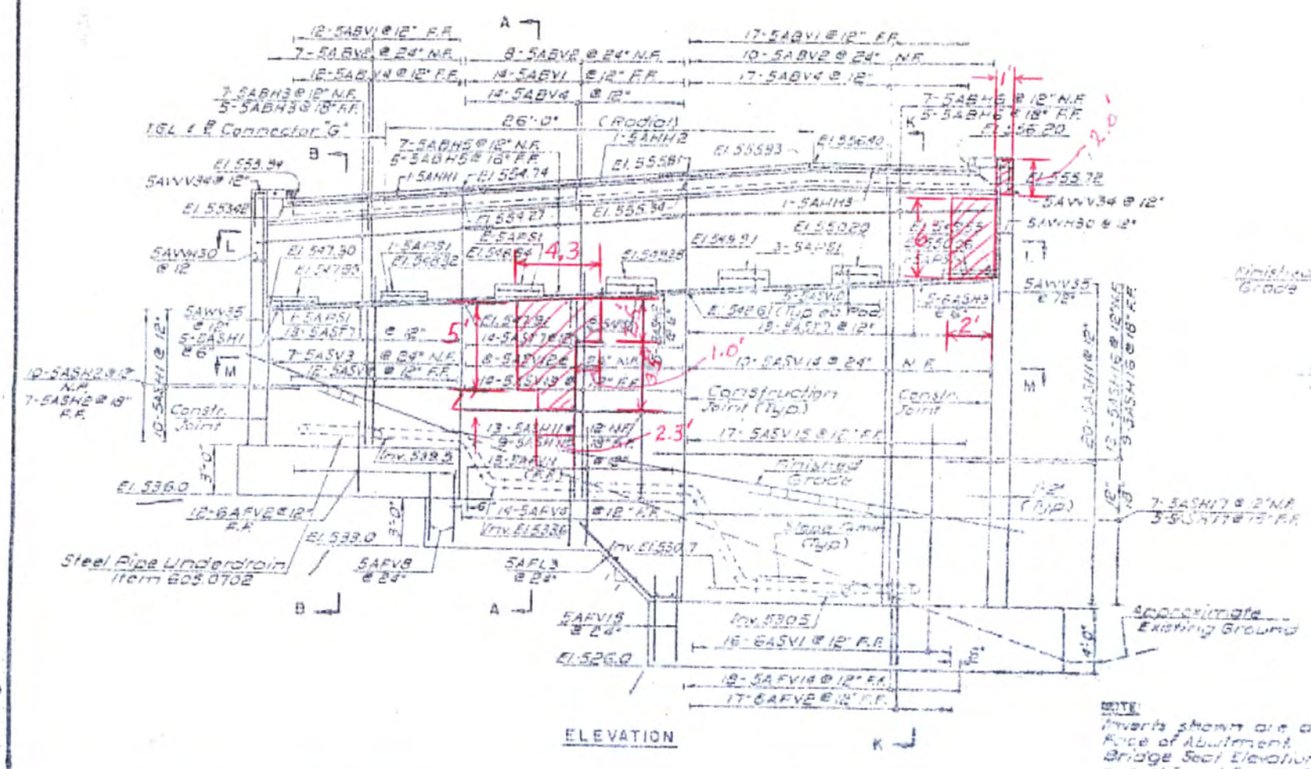

ELEVATION

NOTE:
Inverts shown are at Front Face of Abutment.
Bridge Seat Elevations shown are at Front Face of Backwall.

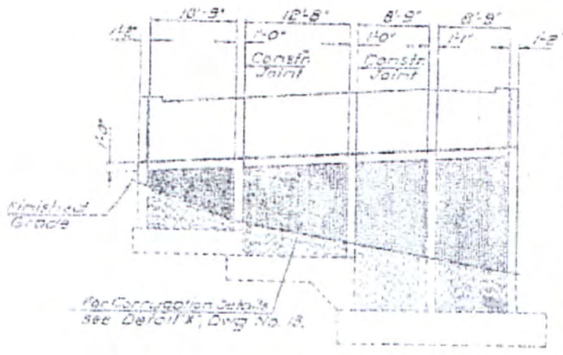

AESTHETIC TREATMENT AT ABUTMENT
Scale 3/4"=1'-0"

REFERENCES:
1 For Sections A-A and B-B, see Dwg. No. 11
2 For Section K-K, see Dwg. No. 12.
3 For Sections L-L and M-M, see Dwg. No. 13
4 For Concrete Item Numbers and Quantities in Specific Pours, see Dwgs. No. 14, 15 and 17.
5 For Quantity of Reinforcing in Specific Pours and Bar Lists, see Dwgs. Nos. 33, 34 & 35.
6 For Additional References, see Dwg. No. 6.

BRIDGE NO. 2
CONNECTOR "G" OVER I-81 N.B.
SOUTH ABUTMENT
Elm Abutment

STRUCT. NO.	SCALE	DATE	GOODKIND & O'DEA, INC. CONSULTING ENGINEERS
0	1/4" = 1'-0" or as noted	Nov 1975	

2645

304

IN-DEPTH PHOTO DOCUMENTATION

C&S Engineers, Inc.
499 Col. Eileen Collins Blvd.
Syracuse, New York 13212
Phone: (315) 455-2000
Fax: (315) 455-9667
www.cscos.com

I-481 to I-81 Southbound - BIN 1069100



DESCRIPTION: NORTH ABUTMENT – FACING WEST – GENERAL CONFIGURATION

PHOTO 1



DESCRIPTION: NORTH ABUTMENT - WEST END – DELAMINATED CONCRETE

PHOTO 2

C&S Engineers, Inc.
499 Col. Eileen Collins Blvd.
Syracuse, New York 13212
Phone: (315) 455-2000
Fax: (315) 455-9667
www.cscos.com

I-481 to I-81 Southbound - BIN 1069100



DESCRIPTION: NORTH ABUTMENT – WEST FASCIA BEARING – LOOKING NORTHWEST– MINOR RUST SCALE AND TEFLON PAD DELAMINATION

PHOTO 3



DESCRIPTION: NORTH ABUTMENT – INTERIOR PEDESTAL – CONCRETE DEBRIS BUILDUP FROM JOINT WORK & SPALLED BACKWALL ALONG TOP

PHOTO 4

C&S Engineers, Inc.
499 Col. Eileen Collins Blvd.
Syracuse, New York 13212
Phone: (315) 455-2000
Fax: (315) 455-9667
www.cscos.com

I-481 to I-81 Southbound - BIN 1069100



DESCRIPTION: NORTH ABUTMENT – NORTHEAST WINGWALL – MINOR DELAMINATION

PHOTO 5



DESCRIPTION: NORTH PIER (CONCRETE CAPBEAM) - FACING NORTH – GENERAL CONFIGURATION – MINOR MAP CRACKING

PHOTO 6

C&S Engineers, Inc.
499 Col. Eileen Collins Blvd.
Syracuse, New York 13212
Phone: (315) 455-2000
Fax: (315) 455-9667
www.cscos.com

I-481 to I-81 Southbound - BIN 1069100



DESCRIPTION: NORTH PIER – CONRETE CAP BEAM – NORTH FACE – RUST STAINS FROM LEAKING JOINT

PHOTO 7



DESCRIPTION: NORTH PIER – WEST COLUMN (TYPICAL) –FACING SOUTHWEST – RUST STAINS FROM LEAKING JOINT

PHOTO 8

C&S Engineers, Inc.
499 Col. Eileen Collins Blvd.
Syracuse, New York 13212
Phone: (315) 455-2000
Fax: (315) 455-9667
www.cscos.com

I-481 to I-81 Southbound - BIN 1069100



DESCRIPTION: SOUTH PIER – GENERAL CONFIGURATION – FACING SOUTH – STEEL CAPBEAM

PHOTO 9



DESCRIPTION: STEEL CAP BEAM – EAST BEARING FOR CAPBEAM - MINOR RUST ON BEARING ELEMENTS – LOOKING NORTHEAST

PHOTO 10

C&S Engineers, Inc.
499 Col. Eileen Collins Blvd.
Syracuse, New York 13212
Phone: (315) 455-2000
Fax: (315) 455-9667
www.cscos.com

I-481 to I-81 Southbound - BIN 1069100



DESCRIPTION: SOUTH PIER – EAST COLUMN (TYP. FOR WEST COLUMN) - LOOKING WEST – GENERAL CONFIGURATION – SHOWS ENTRANCE TO CAPBEAM

PHOTO 11



DESCRIPTION: STEEL CAP BEAM– NORTH END– LOOKING SOUTH – MODERATE RUST SCALE FOR NORTH SIDE GIRDER BEARING ELEMENTS

PHOTO 12

C&S Engineers, Inc.
499 Col. Eileen Collins Blvd.
Syracuse, New York 13212
Phone: (315) 455-2000
Fax: (315) 455-9667
www.cscos.com

I-481 to I-81 Southbound - BIN 1069100



DESCRIPTION: STEEL CAPBEAM – GIRDER CONFIGURATION ON NORTH SIDE OF CAPBEAM

PHOTO 13



DESCRIPTION: SOUTH PIER – WEST COLUMN – SOUTH FACE – MAP CRACKING WITH HOLLOW CONCRETE - FACING NORTH

PHOTO 14

C&S Engineers, Inc.
499 Col. Eileen Collins Blvd.
Syracuse, New York 13212
Phone: (315) 455-2000
Fax: (315) 455-9667
www.cscos.com

I-481 to I-81 Southbound - BIN 1069100



DESCRIPTION: STEEL CAPBEAM –SOUTH SIDE - LOOKING SOUTH – INTERNAL VIEW OF TRANSVERSE STIFF. & GIRDER CONNECTION BOLTS TO CAPBEAM - MINOR RUST

PHOTO 15



DESCRIPTION: STEEL CAPBEAM –RUST BUILDUP ON INSIDE BOTTOM PLATE AT WEST ENTRANCE TO CAPBEAM – TYPICAL AT OTHER END

PHOTO 16

C&S Engineers, Inc.
499 Col. Eileen Collins Blvd.
Syracuse, New York 13212
Phone: (315) 455-2000
Fax: (315) 455-9667
www.cscos.com

I-481 to I-81 Southbound - BIN 1069100



DESCRIPTION: STEEL CAPBEAM – SOUTH SIDE – GIRDER CONNECTION TO CAPBEAM – LOOKING NORTHEAST

PHOTO 17



DESCRIPTION: STEEL CAPBEAM –NORTH SIDE – POT BEARING (FIXED) FOR GIRDER CONNECTION TO CAPBEAM – LOOKING EAST

PHOTO 18

C&S Engineers, Inc.
499 Col. Eileen Collins Blvd.
Syracuse, New York 13212
Phone: (315) 455-2000
Fax: (315) 455-9667
www.cscos.com

I-481 to I-81 Southbound - BIN 1069100



DESCRIPTION: MIDDLE SPAN – EAST SIDE – SPALLING & DELAMINATION OF FASCIA – TYPICAL ALL FASCIAS

PHOTO 19



DESCRIPTION: MIDDLE SPAN – FACING NORTHWEST – FRAMING PLAN (TYPICAL)

PHOTO 20

C&S Engineers, Inc.
499 Col. Eileen Collins Blvd.
Syracuse, New York 13212
Phone: (315) 455-2000
Fax: (315) 455-9667
www.cscos.com

I-481 to I-81 Southbound - BIN 1069100



DESCRIPTION: SOUTH ABUTMENT - BACKWALL - LOOKING SOUTHEAST – DELAMINATION OF BACKWALL CONCRETE – SE CORNER

PHOTO 21



DESCRIPTION: SOUTH ABUTMENT – SOUTHEAST CHEEKWALL - LOOKING SOUTHEAST – DELAMINATION OF CONCRETE

PHOTO 22

C&S Engineers, Inc.
499 Col. Eileen Collins Blvd.
Syracuse, New York 13212
Phone: (315) 455-2000
Fax: (315) 455-9667
www.cscos.com

I-481 to I-81 Southbound - BIN 1069100



DESCRIPTION: SOUTH ABUTMENT – EAST PEDESTAL - LOOKING SOUTHEAST - BEARING ELEMENTS HAVE MINOR RUST SCALE - TYPICAL

PHOTO 23



DESCRIPTION: SOUTH ABUTMENT – WEST FASCIA BEARING – CONCRETE DEBRIS ON SEAT & PEDESTALS FROM ABUTMENT REPAIRS

PHOTO 24

C&S Engineers, Inc.
499 Col. Eileen Collins Blvd.
Syracuse, New York 13212
Phone: (315) 455-2000
Fax: (315) 455-9667
www.cscos.com

I-481 to I-81 Southbound - BIN 1069100



DESCRIPTION: SOUTH ABUTMENT – FACING SOUTHEAST – GENERAL CONFIGURATION

PHOTO 25



DESCRIPTION: SOUTH ABUTMENT – WEST FASCIA GIRDER – LOCALIZED PITTING OF GIRDER (TYPICAL) – LOOKING NORTHEAST

PHOTO 26

C&S Engineers, Inc.
499 Col. Eileen Collins Blvd.
Syracuse, New York 13212
Phone: (315) 455-2000
Fax: (315) 455-9667
www.cscos.com

I-481 to I-81 Southbound - BIN 1069100



DESCRIPTION: SOUTHEAST APPROACH – LOOKING NORTHWEST – AGAINST TRAFFIC

PHOTO 27



DESCRIPTION: NORTH APPROACH – LOOKING SOUTHEAST – WITH TRAFFIC

PHOTO 28

"PHOTO LOCATION MAP"

1069100
I81SB TO I481EB RAMP
OVER I81NB

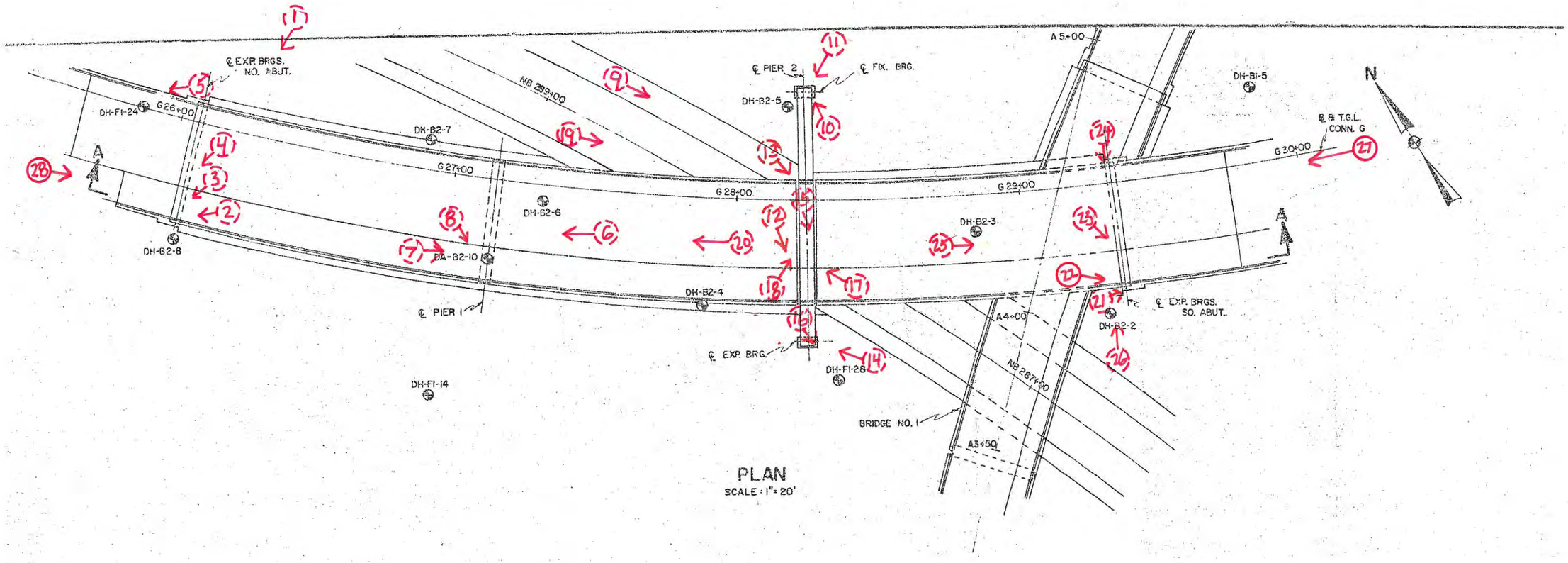

◌→ INDICATES PHOTO TAKEN BELOW THE BRIDGE DECK

○→ INDICATES PHOTO TAKEN ABOVE THE BRIDGE DECK

ASBESTOS DOCUMENTATION

ATHENICA
ENVIRONMENTAL SERVICES INC.
45-09 GREENPOINT AVENUE
LONG ISLAND CITY, NY 11104
Tel. (718) 784-7490
Fax. (718) 784-4085

PROJECT NO. (ATHENICA FILE#) C003314 DATE 4/28/2004

METHOD OF SHIPMENT U.S. MAIL INSPECTOR K WAY

NUMBER OF SAMPLES 3 TYPE OF ANALYSIS REQUESTED ☐ PLM ☒ NOB-PLM ☒ NOB-TEM ☐ OTHERS

TURNAROUND TIME ☐ 6 HRS ☐ 12 HRS ☐ 24 HRS ☒ OTHER HRS

COMMENTS ATT: CHRISTOPHER ANDERSON
333 E. WASHINGTON ST. SYRACUSE, N.Y. 13202

HOM. AREA	SAMLPLE #	SAMPLE DESCRIPTION	SAMPLE LOCATION	FIELD COMMENTS	LABORATORY RESULTS		
					PLM	PLM-NOB	TEM-NOB
	01	STEEL PAINT COAT	G-1 BOTTOM FLANGE SPAN 1	4METERS FROM BEG BEARING			
	02	"	G-2 1ST GUSSET PLATE SPAN 1				
	03	"	G-2 WEB SPAN 1	5METERS FROM BEG BEARING			

TRANSMITTAL OF RESULTS :
☒ STANDARD
☐ TELEPHONE RESULTS TO
☐ FAX RESULTS TO

TELEPHONE # : (315) 428-4628
FAX # :

BATCH # : 04-05-042

CHAIN OF CUSTODY RECORD

RELINQUISHED BY :	David J. Way	DATE :	4/28/2004	TIME :	
RECEIVED BY :		DATE :	5/3/2004	TIME :	
ANALYST :		DATE :	5/14/2004	TIME :	

LABORATORY ACCREDITATION :
NVLAP# 101958 ELAP# 10955

ATHENICA
ENVIRONMENTAL SERVICES INC.
Tel (718) 784-7490
Fax (718) 784-4085

BULK (NOB) ASBESTOS ANALYSIS BY POLARIZED LIGHT MICROSCOPY AND TRANSMISSION ELECTRON MICROSCOPY

CLIENT: NYS DOT, Region 3
LABORATORY ID #: 04-05-042
DATES OF ANALYSIS: 05/14/04

PROJECT: Bin # 1069100
ANALYT. METHODOLOGIES: ELAP 198.1, ELAP 198.4
DATE OF REPORT:05/17/04

LABORATORY RESULTS

CLIENT #	LAB. ID #	LOCATION	%ORG	%ASI	%All	PLM RESULTS	TYPE OF ASBEST.	TEM RESULTS	TYPE OF ASBEST.	POSIT. / NEGAT.
01	04-05-042-01	Steel paint/coating, G1, bottom flange span 1	37.96	8.03	54.01	**ND**	NA	**ND**	NA	**Negat.**
02	04-05-042-02	Steel paint/coating, G1, 1st plate span 1	33.95	13.41	52.64	**ND**	NA	**ND**	NA	**Negat.**
03	04-05-042-03	Steel paint/coating, G2, web span 1	31.49	13.83	54.68	**ND**	NA	**ND**	NA	**Negat.**

ANALYST
E. Sioukri

LABORATORY DIRECTOR
Spiro Dongaris

LABORATORY CERTIFICATION NUMBERS: NVLAP 101958, ELAP 10955

- Athenica Environmental Services Inc. (AES), is responsible only for information pertaining to samples taken by its employees.
- Samples will be stored for sixty (60) days. AES Inc., should be notified within this time frame for a true duplicate analysis.
- The report relates only to items tested. This report must not be used to claim product endorsement by NVLAP or any other agency of the U.S. Government. Test reports may not be reproduced except in full and with prior approval of AES Inc.
- The liability of Athenica Environmental Services Inc. with respect to the services charged, shall in no event exceed the amount of the invoice.

ASBESTOS DOCUMENTATION FROM WATTS ARCHITECTURE & ENGINEERING, INC.

(WILL REPLACE BIN FOLDER ASBESTOS REPORT UPON COMPLETION)

NEW YORK STATE
DEPARTMENT OF TRANSPORTATION
D031085 P.I.N 3501.60

LEVEL 1 LOAD RATING
B.I.N. 1069100
I-81 Southbound to I-481 Eastbound over I-81 Northbound

CONTROLLING MEMBER	CONTROLLING PARAMETER	LIVE LOAD	INVENTORY RATING	OPERATING RATING
SPAN 3 INTERIOR GIRDER G303	FLEXURE	HS20-44	HS 21.2 (38.2 TONS)	HS 35.4 (63.7 TONS)
SPAN 3 INTERIOR GIRDER G303	FLEXURE	ALTERNATE MILITARY LOADING	1.39 (33.3 TONS)	2.33 (55.9 TONS)

DOES NOT INCLUDE FUTURE WEARING COURSE

ANALYSIS METHOD: LOAD FACTOR

RECOMMENDED POSTING AS-IS CONDITION: _____ Tons __X__ None

CALCULATED BY:

STATE OF NEW YORK JESSICA S. BAUER No. 084915 LICENSED PROFESSIONAL ENGINEER

DATE: 3/9/15

QUALITY ASSURANCE BY:

STATE OF NEW YORK PAUL F BYRNE 055826 LICENSED PROFESSIONAL ENGINEER

DATE: 3/9/15

C&S COMPANIES®

499 Col. Eileen Collins Blvd.
Syracuse, NY 13212
phone 315-455-2000
fax 315-455-9667
www.cscos.com

ENGINEERS
DESIGN BUILD
TECHNICAL RESOURCES
OPERATIONS

C&S Companies

C&S Engineers, Inc.
Syracuse Hancock International Airport
Syracuse, NY 13212
phone 315-455-2000
fax 315-455-9667
www.cscos.com

TECHNICAL MEMORANDUM

TO: FILE (190.514.001)

FROM: JESSICA S. BAUER, P.E.
NYSPE 084915

DATE: FEBRUARY 12, 2014

C&S PROJECT NO.: 190.514.001

RE: SEISMIC ASSESSMENT SUMMARY
NEW YORK STATE DEPARTMENT OF TRANSPORTATION
D031085; PIN 3501.60; I-81

BIN: 1069100 Seismic Assessment

This memorandum summarizes the seismic assessment conducted for BIN 1069100 as part of the Interstate 81 Project in Syracuse, NY. The purpose of the assessment is to determine if seismic retrofits are warranted at the superstructure to substructure connection, and if further seismic evaluation of the structure is required. This memorandum will give the assessment results, retrofits required and recommendations for further seismic evaluation of the structure.

ASSESSMENT PROCEDURE

The seismic assessment was performed in accordance with the FHWA Seismic Retrofitting Manual for Highway Structures: Part 1 - Bridges, January 2006. As per the referenced manual, seismic assessment was performed for both lower level and upper level earthquake ground motion. The lower level earthquake ground motion has a reasonable likelihood of occurrence within the life of the bridge (50% probability of exceedance within a 75 year bridge life). The upper level earthquake ground motion has a finite likelihood of occurrence within the life of the bridge (7% probability of exceedance within a 75 year bridge life).

Values for the spectral acceleration for the Syracuse area used in the assessment are as follows:

- Lower Level Earthquake Ground Motion for a Short Period (0.2 seconds): $S_S = 0.0251$
- Lower Level Earthquake Ground Motion for a Long Period (1.0 seconds): $S_1 = 0.0076$
- Upper Level Earthquake Ground Motion for a Short Period (0.2 seconds): $S_S = 0.139$
- Upper Level Earthquake Ground Motion for a Long Period (1.0 seconds): $S_1 = 0.047$

These values are considered constant and are the same for all seismic assessments of bridges in the Syracuse area.

The Site Class is based on the soil conditions at the bridge location. It was determined that this parameter has little effect on the results of the seismic assessment because the spectral

You created this PDF from an application that is not licensed to print to novaPDF printer (http://www.novapdf.com)

acceleration values for the Syracuse area are small. Based on this, a site class of D was used for all seismic assessments of bridges in the Syracuse area.

Bridge parameters used in the seismic assessment were retrieved from the record drawings and WinBolts data.

The seismic assessment takes into account the anticipated service life, importance, and the seismic exposure of the bridge to determine a seismic retrofit category (SRC). The SRC is then used to determine seismic evaluation methods and retrofit measures. There are four SRCs, A through D. Seismic retrofit category A is the lowest category; bridges in this category do not require retrofits or further seismic evaluation. Seismic retrofit category D is the highest category; bridges in this category requiring the most rigorous seismic evaluations and retrofits.

ASSESSMENT RESULTS

The SRC for the bridge is "**C**" for lower level earthquake ground motion and "**B**" for upper level earthquake ground motion.

RETROFITS REQUIRED

Bearing replacements are not required at the abutments or piers. Seat width improvements are required at Pier 2. Additional retrofits may be required if further seismic evaluation is needed.

RECOMMENDATIONS FOR FURTHER SEISMIC EVALUATION

For the lower level earthquake ground motion, it is recommended that capacity/demand ratios for bridge components are calculated as per Section 5.4 of the referenced manual. For the upper level earthquake ground motion, it is recommended that the capacities of the bearings are checked as per Section 5.2 of the referenced manual.

Retrofit cost estimates will be provided after any further required seismic evaluations are completed.

You created this PDF from an application that is not licensed to print to novaPDF printer (http://www.novapdf.com)

C&S Engineers, Inc.
Syracuse Hancock International Airport
Syracuse, NY 13212
phone 315-455-2000
fax 315-455-9667
www.cscos.com

TECHNICAL MEMORANDUM

TO: FILE (190.514.001)

FROM: PAUL BYRNE, P.E.
NYSPE 055928

DATE: MARCH 10, 2015

C&S PROJECT NO.: 190.514.001

RE: NEW YORK STATE DEPARTMENT OF TRANSPORTATION
D031085; PIN 3501.60; I-81 Opportunities, BIN 1069100 Fatigue Evaluation

---

This memorandum documents a fatigue evaluation conducted for the existing Interstate 81 Viaduct Project. Existing structures with AASHTO Category D, E, and E' fatigue-prone details require 100% hands-on inspection unless proven to be exempt. The purpose of the evaluation is to assess the remaining life of fatigue-prone components.

EVALUATION PROCEDURES

The fatigue evaluation was performed in accordance with the AASHTO Guide Specification for Fatigue Evaluations of Existing Steel Bridges, 1990. Fatigue-prone welds identified in the biennial inspection reports were located on record drawings and confirmed visually in the field. Additional information concerning fatigue-prone welds located in BIN folders was also obtained and reviewed prior to inspection.

EVALUATION RESULTS

The results of the fatigue evaluation of the controlling span (Span 3) of the existing bridge are shown below.

Fatigue Detail Location	Remaining Safe Fatigue Life (Years)	Remaining Mean Fatigue Life (Years)
Span 3, Girder G301 – Gusset Plate at Bottom Flange, Mid Span	93	562
Span 3, Girder G302 – Gusset Plate at Bottom Flange, Mid Span	176	971
Span 3, Girder G303 – Gusset Plate at Bottom Flange, Mid Span	324	1702
Span 3, Girder G304 – Gusset Plate at Bottom Flange, Mid Span	399	2071
Span 3, Girder G305 – Gusset Plate at Bottom Flange, Mid Span	395	2049
Span 3, Girder G306 – Gusset Plate at Bottom Flange, Mid Span	263	1399
Span 3, Girder G307 – Gusset Plate at Bottom Flange, Mid Span	57	384

FATIGUE EVALUATION OF EXISTING BRIDGE

Designed by: JSB 3/6/15
Checked by: PFB 3/10/15

Structure

BIN 1069100, Span 3, G301 (G7), Bottom Flange
Carried: I-81 SB to I-481 NB
Crossed: I-81

Design Code

The fatigue evaluation of the existing bridge is performed in accordance with the AASHTO Guide Specifications for Fatigue Evaluations of Existing Steel Bridges, 1990. This reference is referred to as "AASHTO Fatigue."

Template Instructions

Values highlighted green are values to be input by the user.

Blue note text gives instructions or commentary for the template.

Red italic text in parentheses gives commentary specific to this structure.

Bridge Parameters

Span Length:	Span 1:	$L_{Span} := 106.415ft$	
Span Type:		$T_{Span} := "Simple"$	Note: Use "Simple" or "Continuous"
Girder Spacing		$S_{exterior} := 6.83ft$	
Location of Fatigue Detail:		Bottom flange at midspan (Gusset plate welded to tension flange, controlling location)	
Gusset Plate Thickness:		$t_g := 0.375 \cdot in$	
Concrete Deck Attachment:		$A_{CD} := "Composite"$	Note: Use "Composite" or "Noncomposite"
Number of Lanes:		$N_{Lanes} := 2$	
Traffic Direction:		$Traffic := "1\text{-}way"$	Note: Use "1-way" or "2-way"
Minimum Shoulder Width:		$B_{Shld} := 5.50 \cdot ft$	
Overhang Width:		$B_{Ovhg} := 1.50 \cdot ft$	
Width of Exterior Lane:		$B_{ExtLane} := 12.00 \cdot ft$	
Distance From Fascia to Face of Rail/Curb:		$D_{F\_FRC} := 1.50 \cdot ft$	

From WinBolts:	Year Built:	$y_b := 1980$
	ADDT:	$AADT := 4039$
	Year of AADT:	$Y_{AADT} := 2000$
	Future AADT:	$AADT_F := 5655$
	Year of Future AADT:	$Y_{AADT\_F} := 2020$
	Daily Truck Traffic:	$DTT := 12.49\%$

FATIGUE EVALUATION OF EXISTING BRIDGE

Designed by: JSB 3/6/15
Checked by: PFB 3/10/15

Fatigue Detail: Gusset Plate Weld to Bottom Flange

$$Fatigue\_Category := \begin{cases} \text{"E"} & \text{if } t_g < 1.0\cdot in \\ \text{" E' "} & \text{if } t_g \geq 1.0\cdot in \end{cases} = \text{"E"}$$

Fatigue Detail Location: Fatigue Detail Located within 0.1 of the Span on Either Side of an Interior Support for a Continuous Span:

$L_{FD\_NMR} := \text{"No"}$ Note: Use "Yes" or "No"

Fatigue Live Load Distribution Factor (AASHTO Fatigue 2.6):

$$D := \begin{cases} 17 & \text{if } L_{Span} \leq 30\cdot ft \\ 17 + \frac{(19-17)}{(40\cdot ft - 30\cdot ft)}\cdot\left(L_{Span} - 30\cdot ft\right) & \text{if } 30\cdot ft < L_{Span} \leq 40\cdot ft \\ 19 + \frac{(20-19)}{(60\cdot ft - 40\cdot ft)}\cdot\left(L_{Span} - 40\cdot ft\right) & \text{if } 40\cdot ft < L_{Span} \leq 60\cdot ft \\ 20 + \frac{(22-20)}{(90\cdot ft - 60\cdot ft)}\cdot\left(L_{Span} - 60\cdot ft\right) & \text{if } 60\cdot ft < L_{Span} \leq 90\cdot ft \\ 22 + \frac{(23-22)}{(120\cdot ft - 90\cdot ft)}\cdot\left(L_{Span} - 90\cdot ft\right) & \text{if } 90\cdot ft < L_{Span} < 120\cdot ft \\ 23 & \text{if } L_{Span} \geq 120\cdot ft \end{cases} = 22.55$$

Interior Girder Distribution Factor:

$$DF_i := \begin{cases} 2\cdot\frac{S_{exterior}}{D\cdot ft} & \text{if } \frac{S_{exterior}}{D\cdot ft} < \frac{S_{exterior} - 3\cdot ft}{S_{exterior}} \\ 2\cdot\frac{S_{exterior} - 3\cdot ft}{S_{exterior}} & \text{otherwise} \end{cases} = 0.61$$

Distance From Exterior Girder to Centerline: of Outer Lane Divided by Girder Spacing

$$P := \frac{D_{F\_FRC} + 0.5\cdot B_{ExtLane} - B_{Ovhg}}{S_{exterior}} = 0.88$$

FATIGUE EVALUATION OF EXISTING BRIDGE

Designed by: JSB 3/6/15
Checked by: PFB 3/10/15

Exterior Girder Distribution Factor:

$$DF := \begin{cases} DF_i & \text{if } \left(B_{Ovhg} - D_{F\_FRC}\right) < 1.0\cdot ft \vee B_{Shld} \geq 4\cdot ft \\ \text{if}\left[(0.7 - 0.4\cdot P) \geq DF_i, (0.7 - 0.4\cdot P), DF_i\right] & \text{if } \left(B_{Ovhg} - D_{F\_FRC}\right) > 1.0\cdot ft \wedge B_{Shld} < 4\cdot ft \wedge P > 0.5 \\ \text{if}\left[(0.9 - 0.8\cdot P) \geq DF_i, (0.9 - 0.8\cdot P), DF_i\right] & \text{if } \left(B_{Ovhg} - D_{F\_FRC}\right) > 1.0\cdot ft \wedge B_{Shld} < 4\cdot ft \wedge P < 0.5 \end{cases}$$

$DF = 0.61$

From MDX: Composite Section of Girder at Fatigue Detail: (Midspan)

Moment of Inertia: $I := 69105in^4$

Distance to NA from Bottom Flange: $c_b := 41.96\cdot in$

Maximum Moment at Fatigue Detail: (Midspan) $M := 552.83kip\cdot ft$

Stress Range

Compute Live Load Stress Range (AASHTO Fatigue 2.7):

Composite Concrete Deck Factor:

Positive Moment Region:

$$F_{Deck\_P} := \begin{cases} 1.15 & \text{if } A_{CD} = \text{"Composite"} \\ 1.30 & \text{if } A_{CD} = \text{"Noncomposite"} \end{cases} = 1.15$$

Negative Moment Region:

$$F_{Deck\_N} := \begin{cases} 1.15 & \text{if } A_{CD} = \text{"Composite"} \\ 1.15 & \text{if } A_{CD} = \text{"Noncomposite"} \end{cases} = 1.15$$

$$S_{rP} := \frac{0.75M\cdot c_b}{I\cdot F_{Deck\_P}} = 2.63\cdot ksi$$

Fatigue Truck Variables

$F_{s1} := 1.0$ (AASHTO Fatigue 2.1)

$F_{s2} := 1.0$ (AASHTO Fatigue 2.2)

$F_{s3} := 1.0$ (AASHTO Fatigue 2.6)

Truck Superposition (AASHTO Fatigue 2.3): Apply up to a 15% increase to the fatigue truck to account for unique truck conditions. Use 0%.

$Truck_{super} := 0\%$

Impact (AASHTO Fatigue 2.4): Assumes road is smooth with no rough surfaces

$Impact := 10\%$

FATIGUE EVALUATION OF EXISTING BRIDGE

Designed by: JSB 3/6/15
Checked by: PFB 3/10/15

Reliability Factor (AASHTO Fatigue 2.8):

Remaining Safe Life: Reliability Factor for for Redundant Members: $R_{so} := 1.35$

$R_s := R_{so} \cdot F_{s1} \cdot F_{s2} \cdot F_{s3} = 1.35$

Remaining Mean Life: $R_m := 1 \cdot F_{s1} \cdot F_{s2} \cdot F_{s3} = 1.00$

Remaining Life Variables

Fatigue_Category = "E"

Detail Constant (AASHTO Fatigue 3.3):

$$K := \begin{cases} 68 & \text{if Fatigue\_Category = "A"} \\ 33 & \text{if Fatigue\_Category = "B"} \\ 17 & \text{if Fatigue\_Category = " B' "} \\ 12 & \text{if Fatigue\_Category = "C"} \\ 6.0 & \text{if Fatigue\_Category = "D"} \\ 2.9 & \text{if Fatigue\_Category = "E"} \\ 1.1 & \text{if Fatigue\_Category = " E' "} \\ 2.9 & \text{if Fatigue\_Category = "F"} \end{cases} = 2.90$$

Stress Limiting Range (AASHTO Fatigue 3.3):

$$S_{FL} := \begin{cases} 8.8 \cdot ksi & \text{if Fatigue\_Category = "A"} \\ 5.9 \cdot ksi & \text{if Fatigue\_Category = "B"} \\ 4.4 \cdot ksi & \text{if Fatigue\_Category = " B' "} \\ 3.7 \cdot ksi & \text{if Fatigue\_Category = "C"} \\ 2.6 \cdot ksi & \text{if Fatigue\_Category = "D"} \\ 1.6 \cdot ksi & \text{if Fatigue\_Category = "E"} \\ 0.9 \cdot ksi & \text{if Fatigue\_Category = " E' "} \\ 2.9 \cdot ksi & \text{if Fatigue\_Category = "F"} \end{cases} = 1.60 \cdot ksi$$

Stress Cycles Per Truck Passage (AASHTO Fatigue 3.4):

$$C := \begin{cases} 1.0 & \text{if } T_{Span} = \text{"Simple"} \wedge L_{Span} \geq 40 \cdot ft \\ 1.8 & \text{if } T_{Span} = \text{"Simple"} \wedge L_{Span} < 40 \cdot ft \\ 1 + \dfrac{\left(L_{Span} - 80 \cdot ft\right)}{400 \cdot ft} & \text{if } T_{Span} = \text{"Continuous"} \wedge L_{FD\_NMR} = \text{"Yes"} \wedge L_{Span} \geq 80 \cdot ft \\ 1.0 & \text{if } T_{Span} = \text{"Continuous"} \wedge L_{FD\_NMR} = \text{"Yes"} \wedge 40 \cdot ft \leq L_{Span} < 80 \cdot ft \\ 1.5 & \text{if } T_{Span} = \text{"Continuous"} \wedge L_{FD\_NMR} = \text{"Yes"} \wedge L_{Span} < 40 \cdot ft \\ 1.0 & \text{if } T_{Span} = \text{"Continuous"} \wedge L_{Span} \geq 40 \cdot ft \\ 1.5 & \text{if } T_{Span} = \text{"Continuous"} \wedge L_{Span} < 40 \cdot ft \end{cases} = 1.00$$

FATIGUE EVALUATION OF EXISTING BRIDGE

Designed by: JSB 3/6/15
Checked by: PFB 3/10/15

Growth Rate: $g := \left(\frac{AADT_F}{AADT}\right)^{\left[\frac{1}{(Y_{AADT\_F} - Y_{AADT})}\right]} - 1 = 0.017$

Calculate AADT for Original Construction Year: $AADT_{OCY} := \frac{AADT}{(1+g)^{(Y_{AADT} - y_b)}} = 2884.80$

Calculate AADT for Present (2014): $AADT_{2014} := \frac{AADT}{(1+g)^{(Y_{AADT} - 2014)}} = 5111.93$

Fraction of Trucks: $F_T := DTT = 0.12$

Fraction of Trucks in Outer Lane: (AASHTO Fatigue 3.5)

$$F_L := \begin{cases} 0.60 & \text{if } N_{Lanes} = 2 \wedge Traffic = \text{"2-way"} \\ 0.50 & \text{if } N_{Lanes} = 3 \wedge Traffic = \text{"2-way"} \\ 0.45 & \text{if } N_{Lanes} = 4 \wedge Traffic = \text{"2-way"} \\ 0.45 & \text{if } N_{Lanes} = 5 \wedge Traffic = \text{"2-way"} \\ 0.40 & \text{if } N_{Lanes} \geq 6 \wedge Traffic = \text{"2-way"} \\ 1.00 & \text{if } N_{Lanes} = 1 \wedge Traffic = \text{"1-way"} \\ 0.85 & \text{if } N_{Lanes} = 2 \wedge Traffic = \text{"1-way"} \\ 0.80 & \text{if } N_{Lanes} \geq 3 \wedge Traffic = \text{"1-way"} \end{cases} = 0.85$$

Average Daily Truck Volume in the Outer lane for the Past Period (AASHTO Fatigue 3.2 & 3.5):

$T_{OCY} := AADT_{OCY} \cdot F_T \cdot F_L = 306.26$

$T_{2014} := AADT_{2014} \cdot F_T \cdot F_L = 542.71$

$T_P := \frac{(T_{OCY} + T_{2014})}{2} = 424.49$

Average Daily Truck Volume in the Outer lane for the Future Remaining Life Period (AASHTO Fatigue 3.2 & 3.5):

Present Age of Bridge: $a := 0$

Growth Rate: $g = 1.70 \cdot \%$

AASHTO Fatigue Figure 3.5A: $Ratio_{Ta\_T} := 1.28$

$T_N := Ratio_{Ta\_T} \cdot T_P = 543.34$

FATIGUE EVALUATION OF EXISTING BRIDGE

Designed by: JSB 3/6/15
Checked by: PFB 3/10/15

Infinite Remaining Safe Fatigue Life (AASHTO Fatigue 3.1)

$$Safe\_Fatigue\_Life := \begin{cases} \text{"Infinite"} & \text{if } R_s \cdot S_{rP} < S_{FL} \\ \text{"Finite"} & \text{otherwise} \end{cases} = \text{"Finite"}$$

Finite Remaining Safe Fatigue Life (AASHTO Fatigue 3.2 - Alternative 1)

Present Age of Bridge: $Y_P := 2014 - y_b = 34.00$

Ratio of Fatigue Truck Weight for Past Period to Gross Weight of Fatigue Truck: $Ratio_{Wp\_W} := 1$

Ratio of Fatigue Truck Weight for Future Remaining Life Period to Gross Weight of Fatigue Truck: $Ratio_{Wn\_W} := 1$

Remaining Safe Life Factor: $f_s := 1.0$

Safe Fatigue Life Based on Past Volume: & Fatigue Truck Weight (Years)

$$Y_{l\_s} := \frac{f_s \cdot K \cdot 10^6}{T_P \cdot C \cdot \left(R_s \cdot \frac{S_{rP}}{ksi} \cdot Ratio_{Wp\_W} \right)^3} = 153.16$$

Safe Fatigue Life Based on Future Volume: & Fatigue Truck Weight (Years)

$$Y_{N\_s} := \frac{f_s \cdot K \cdot 10^6}{T_N \cdot C \cdot \left(R_s \cdot \frac{S_{rP}}{ksi} \cdot Ratio_{Wn\_W} \right)^3} = 119.66$$

Remaining Safe Fatigue Life (Years):

$$Y_{f\_s} := Y_{N\_s} \cdot \left[1 - \left(\frac{Y_P}{Y_{l\_s}} \right) \right] = 93.09$$

Finite Remaining Mean Fatigue Life (AASHTO Fatigue 3.2 - Alternative 1)

Remaining Mean Life Factor: $f_m := 2.0$

Mean Fatigue Life Based on Past Volume: & Fatigue Truck Weight (Years)

$$Y_{l\_m} := \frac{f_m \cdot K \cdot 10^6}{T_P \cdot C \cdot \left(R_m \cdot \frac{S_{rP}}{ksi} Ratio_{Wp\_W} \right)^3} = 753.66$$

Mean Fatigue Life Based on Future Volume: & Fatigue Truck Weight (Years)

$$Y_{N\_m} := \frac{f_m \cdot K \cdot 10^6}{T_N \cdot C \cdot \left(R_m \cdot \frac{S_{rP}}{ksi} \cdot Ratio_{Wn\_W} \right)^3} = 588.80$$

Remaining Mean Fatigue Life (Years):

$$Y_{f\_m} := Y_{N\_m} \cdot \left[1 - \left(\frac{Y_P}{Y_{l\_m}} \right) \right] = 562.24$$

FATIGUE EVALUATION OF EXISTING BRIDGE

Designed by: JSB 3/9/15
Checked by: PFB 3/10/15

Structure

BIN 1069100, Span 3, G302 (G6), Bottom Flange
Carried: I-81 SB to I-481 NB
Crossed: I-81

Design Code

The fatigue evaluation of the existing bridge is performed in accordance with the AASHTO Guide Specifications for Fatigue Evaluations of Existing Steel Bridges, 1990. This reference is referred to as "AASHTO Fatigue."

Template Instructions

Values highlighted green are values to be input by the user.

Blue note text gives instructions or commentary for the template.

Red italic text in parentheses gives commentary specific to this structure.

Bridge Parameters

Span Length:	Span 1:	$L_{Span} := 107.245ft$	
Span Type:		$T_{Span} := "Simple"$	Note: Use "Simple" or "Continuous"
Girder Spacing		$S_{interior} := 6.83ft$	
Location of Fatigue Detail:		Bottom flange at midspan (Gusset plate welded to tension flange, controlling location)	
Gusset Plate Thickness:		$t_g := 0.375 \cdot in$	
Concrete Deck Attachment:		$A_{CD} := "Composite"$	Note: Use "Composite" or "Noncomposite"
Number of Lanes:		$N_{Lanes} := 2$	
Traffic Direction:		$Traffic := "1\text{-}way"$	Note: Use "1-way" or "2-way"

From WinBolts:	Year Built:	$y_b := 1980$
	ADDT:	$AADT := 4039$
	Year of AADT:	$Y_{AADT} := 2000$
	Future AADT:	$AADT_F := 5655$
	Year of Future AADT:	$Y_{AADT\_F} := 2020$
	Daily Truck Traffic:	$DTT := 12.49\%$

FATIGUE EVALUATION OF EXISTING BRIDGE

Designed by: JSB 3/9/15
Checked by: PFB 3/10/15

Fatigue Detail: Gusset Plate Weld to Bottom Flange

$$Fatigue\_Category := \begin{cases} \text{"E"} & \text{if } t_g < 1.0\cdot in \\ \text{" E' "} & \text{if } t_g \geq 1.0\cdot in \end{cases} = \text{"E"}$$

Fatigue Detail Location: Fatigue Detail Located within 0.1 of the Span on Either Side of an Interior Support for a Continuous Span:

$L_{FD\_NMR} := \text{"No"}$ Note: Use "Yes" or "No"

Fatigue Live Load Distribution Factor (AASHTO Fatigue 2.6):

$$D := \begin{cases} 17 & \text{if } L_{Span} \leq 30\cdot ft \\ 17 + \frac{(19-17)}{(40\cdot ft - 30\cdot ft)}\cdot\left(L_{Span} - 30\cdot ft\right) & \text{if } 30\cdot ft < L_{Span} \leq 40\cdot ft \\ 19 + \frac{(20-19)}{(60\cdot ft - 40\cdot ft)}\cdot\left(L_{Span} - 40\cdot ft\right) & \text{if } 40\cdot ft < L_{Span} \leq 60\cdot ft \\ 20 + \frac{(22-20)}{(90\cdot ft - 60\cdot ft)}\cdot\left(L_{Span} - 60\cdot ft\right) & \text{if } 60\cdot ft < L_{Span} \leq 90\cdot ft \\ 22 + \frac{(23-22)}{(120\cdot ft - 90\cdot ft)}\cdot\left(L_{Span} - 90\cdot ft\right) & \text{if } 90\cdot ft < L_{Span} < 120\cdot ft \\ 23 & \text{if } L_{Span} \geq 120\cdot ft \end{cases} = 22.57$$

$$DF_i := \begin{cases} 2\cdot\frac{S_{interior}}{D\cdot ft} & \text{if } \frac{S_{interior}}{D\cdot ft} < \frac{S_{interior} - 3\cdot ft}{S_{interior}} \\ 2\cdot\frac{S_{interior} - 3\cdot ft}{S_{interior}} & \text{otherwise} \end{cases} = 0.61$$

FATIGUE EVALUATION OF EXISTING BRIDGE

Designed by: JSB 3/9/15
Checked by: PFB 3/10/15

From MDX: Composite Section of Girder at Fatigue Detail: (Midspan)

Moment of Inertia: $I := 80644in^4$

Distance to NA from Bottom Flange: $c_b := 45.98 \cdot in$

Maximum Moment at Fatigue Detail: (Midspan) $M := 493.82kip \cdot ft$

Stress Range

Compute Live Load Stress Range (AASHTO Fatigue 2.7):

Composite Concrete Deck Factor:

Positive Moment Region: $F_{Deck\_P} := \begin{cases} 1.15 & \text{if } A_{CD} = \text{"Composite"} \\ 1.30 & \text{if } A_{CD} = \text{"Noncomposite"} \end{cases} = 1.15$

Negative Moment Region: $F_{Deck\_N} := \begin{cases} 1.15 & \text{if } A_{CD} = \text{"Composite"} \\ 1.15 & \text{if } A_{CD} = \text{"Noncomposite"} \end{cases} = 1.15$

$$S_{rP} := \frac{0.75 \cdot M \cdot c_b}{I \cdot F_{Deck\_P}} = 2.20 \cdot ksi$$

Fatigue Truck Variables

$F_{s1} := 1.0$ (AASHTO Fatigue 2.1)

$F_{s2} := 1.0$ (AASHTO Fatigue 2.2)

$F_{s3} := 1.0$ (AASHTO Fatigue 2.6)

Truck Superposition (AASHTO Fatigue 2.3): Apply up to a 15% increase to the fatigue truck to account for unique truck conditions. Use 0%.

$Truck_{super} := 0\%$

Impact (AASHTO Fatigue 2.4): Assumes road is smooth with no rough surfaces

$Impact := 10\%$

FATIGUE EVALUATION OF EXISTING BRIDGE

Designed by: JSB 3/9/15
Checked by: PFB 3/10/15

Reliability Factor (AASHTO Fatigue 2.8):

Remaining Safe Life: Reliability Factor for for Redundant Members: $R_{so} := 1.35$

$R_s := R_{so} \cdot F_{s1} \cdot F_{s2} \cdot F_{s3} = 1.35$

Remaining Mean Life: $R_m := 1 \cdot F_{s1} \cdot F_{s2} \cdot F_{s3} = 1.00$

Remaining Life Variables

Fatigue_Category = "E"

Detail Constant (AASHTO Fatigue 3.3):

$$K := \begin{cases} 68 & \text{if Fatigue\_Category = "A"} \\ 33 & \text{if Fatigue\_Category = "B"} \\ 17 & \text{if Fatigue\_Category = " B' "} \\ 12 & \text{if Fatigue\_Category = "C"} \\ 6.0 & \text{if Fatigue\_Category = "D"} \\ 2.9 & \text{if Fatigue\_Category = "E"} \\ 1.1 & \text{if Fatigue\_Category = " E' "} \\ 2.9 & \text{if Fatigue\_Category = "F"} \end{cases} = 2.90$$

Stress Limiting Range (AASHTO Fatigue 3.3):

$$S_{FL} := \begin{cases} 8.8 \cdot ksi & \text{if Fatigue\_Category = "A"} \\ 5.9 \cdot ksi & \text{if Fatigue\_Category = "B"} \\ 4.4 \cdot ksi & \text{if Fatigue\_Category = " B' "} \\ 3.7 \cdot ksi & \text{if Fatigue\_Category = "C"} \\ 2.6 \cdot ksi & \text{if Fatigue\_Category = "D"} \\ 1.6 \cdot ksi & \text{if Fatigue\_Category = "E"} \\ 0.9 \cdot ksi & \text{if Fatigue\_Category = " E' "} \\ 2.9 \cdot ksi & \text{if Fatigue\_Category = "F"} \end{cases} = 1.60 \cdot ksi$$

Stress Cycles Per Truck Passage (AASHTO Fatigue 3.4):

$$C := \begin{cases} 1.0 & \text{if } T_{Span} = \text{"Simple"} \wedge L_{Span} \geq 40 \cdot ft \\ 1.8 & \text{if } T_{Span} = \text{"Simple"} \wedge L_{Span} < 40 \cdot ft \\ 1 + \dfrac{(L_{Span} - 80 \cdot ft)}{400 \cdot ft} & \text{if } T_{Span} = \text{"Continuous"} \wedge L_{FD\_NMR} = \text{"Yes"} \wedge L_{Span} \geq 80 \cdot ft \\ 1.0 & \text{if } T_{Span} = \text{"Continuous"} \wedge L_{FD\_NMR} = \text{"Yes"} \wedge 40 \cdot ft \leq L_{Span} < 80 \cdot ft \\ 1.5 & \text{if } T_{Span} = \text{"Continuous"} \wedge L_{FD\_NMR} = \text{"Yes"} \wedge L_{Span} < 40 \cdot ft \\ 1.0 & \text{if } T_{Span} = \text{"Continuous"} \wedge L_{Span} \geq 40 \cdot ft \\ 1.5 & \text{if } T_{Span} = \text{"Continuous"} \wedge L_{Span} < 40 \cdot ft \end{cases} = 1.00$$

FATIGUE EVALUATION OF EXISTING BRIDGE

Designed by: JSB 3/9/15
Checked by: PFB 3/10/15

Growth Rate: $g := \left(\frac{AADT_F}{AADT}\right)^{\left[\frac{1}{\left(Y_{AADT\_F} - Y_{AADT}\right)}\right]} - 1 = 0.017$

Calculate AADT for Original Construction Year: $AADT_{OCY} := \frac{AADT}{(1+g)^{\left(Y_{AADT} - y_b\right)}} = 2884.80$

Calculate AADT for Present (2014): $AADT_{2014} := \frac{AADT}{(1+g)^{\left(Y_{AADT} - 2014\right)}} = 5111.93$

Fraction of Trucks: $F_T := DTT = 0.12$

Fraction of Trucks in Outer Lane: (AASHTO Fatigue 3.5)

$$F_L := \begin{cases} 0.60 & \text{if } N_{Lanes} = 2 \wedge Traffic = \text{"2-way"} \\ 0.50 & \text{if } N_{Lanes} = 3 \wedge Traffic = \text{"2-way"} \\ 0.45 & \text{if } N_{Lanes} = 4 \wedge Traffic = \text{"2-way"} \\ 0.45 & \text{if } N_{Lanes} = 5 \wedge Traffic = \text{"2-way"} \\ 0.40 & \text{if } N_{Lanes} \geq 6 \wedge Traffic = \text{"2-way"} \\ 1.00 & \text{if } N_{Lanes} = 1 \wedge Traffic = \text{"1-way"} \\ 0.85 & \text{if } N_{Lanes} = 2 \wedge Traffic = \text{"1-way"} \\ 0.80 & \text{if } N_{Lanes} \geq 3 \wedge Traffic = \text{"1-way"} \end{cases} = 0.85$$

Average Daily Truck Volume in the Outer lane for the Past Period (AASHTO Fatigue 3.2 & 3.5):

$T_{OCY} := AADT_{OCY} \cdot F_T \cdot F_L = 306.26$

$T_{2014} := AADT_{2014} \cdot F_T \cdot F_L = 542.71$

$T_P := \frac{\left(T_{OCY} + T_{2014}\right)}{2} = 424.49$

Average Daily Truck Volume in the Outer lane for the Future Remaining Life Period (AASHTO Fatigue 3.2 & 3.5):

Present Age of Bridge: $a := 0$

Growth Rate: $g = 1.70 \cdot \%$

AASHTO Fatigue Figure 3.5A: $Ratio_{Ta\_T} := 1.28$

$T_N := Ratio_{Ta\_T} \cdot T_P = 543.34$

FATIGUE EVALUATION OF EXISTING BRIDGE

Designed by: JSB 3/9/15
Checked by: PFB 3/10/15

Infinite Remaining Safe Fatigue Life (AASHTO Fatigue 3.1)

$$\text{Safe\_Fatigue\_Life} := \begin{cases} \text{"Infinite"} & \text{if } R_s \cdot S_{rP} < S_{FL} \\ \text{"Finite"} & \text{otherwise} \end{cases} = \text{"Finite"}$$

Finite Remaining Safe Fatigue Life (AASHTO Fatigue 3.2 - Alternative 1)

Present Age of Bridge: $Y_P := 2014 - y_b = 34.00$

Ratio of Fatigue Truck Weight for Past Period to Gross Weight of Fatigue Truck: $Ratio_{Wp\_W} := 1$

Ratio of Fatigue Truck Weight for Future Remaining Life Period to Gross Weight of Fatigue Truck: $Ratio_{Wn\_W} := 1$

Remaining Safe Life Factor: $f_s := 1.0$

Safe Fatigue Life Based on Past Volume: & Fatigue Truck Weight (Years)

$$Y_{l\_s} := \frac{f_s \cdot K \cdot 10^6}{T_P \cdot C \cdot \left(R_s \cdot \frac{S_{rP}}{ksi} \cdot Ratio_{Wp\_W} \right)^3} = 259.54$$

Safe Fatigue Life Based on Future Volume: & Fatigue Truck Weight (Years)

$$Y_{N\_s} := \frac{f_s \cdot K \cdot 10^6}{T_N \cdot C \cdot \left(R_s \cdot \frac{S_{rP}}{ksi} \cdot Ratio_{Wn\_W} \right)^3} = 202.76$$

Remaining Safe Fatigue Life (Years):

$$Y_{f\_s} := Y_{N\_s} \cdot \left[1 - \left(\frac{Y_P}{Y_{l\_s}} \right) \right] = 176.20$$

Finite Remaining Mean Fatigue Life (AASHTO Fatigue 3.2 - Alternative 1)

Remaining Mean Life Factor: $f_m := 2.0$

Mean Fatigue Life Based on Past Volume: & Fatigue Truck Weight (Years)

$$Y_{l\_m} := \frac{f_m \cdot K \cdot 10^6}{T_P \cdot C \cdot \left(R_m \cdot \frac{S_{rP}}{ksi} Ratio_{Wp\_W} \right)^3} = 1277.13$$

Mean Fatigue Life Based on Future Volume: & Fatigue Truck Weight (Years)

$$Y_{N\_m} := \frac{f_m \cdot K \cdot 10^6}{T_N \cdot C \cdot \left(R_m \cdot \frac{S_{rP}}{ksi} \cdot Ratio_{Wn\_W} \right)^3} = 997.75$$

Remaining Mean Fatigue Life (Years):

$$Y_{f\_m} := Y_{N\_m} \cdot \left[1 - \left(\frac{Y_P}{Y_{l\_m}} \right) \right] = 971.19$$

FATIGUE EVALUATION OF EXISTING BRIDGE

Designed by: JSB 3/9/15
Checked by: PFB 3/10/15

Structure

BIN 1069100, Span 3, G303 (G5), Bottom Flange
Carried: I-81 SB to I-481 NB
Crossed: I-81

Design Code

The fatigue evaluation of the existing bridge is performed in accordance with the AASHTO Guide Specifications for Fatigue Evaluations of Existing Steel Bridges, 1990. This reference is referred to as "AASHTO Fatigue."

Template Instructions

Values highlighted green are values to be input by the user.

Blue note text gives instructions or commentary for the template.

Red italic text in parentheses gives commentary specific to this structure.

Bridge Parameters

Span Length:	Span 1:	$L_{Span} := 108.075ft$	
Span Type:		$T_{Span} := "Simple"$	Note: Use "Simple" or "Continuous"
Girder Spacing		$S_{interior} := 6.83ft$	
Location of Fatigue Detail:		Bottom flange at midspan (Gusset plate welded to tension flange, controlling location)	
Gusset Plate Thickness:		$t_g := 0.375 \cdot in$	
Concrete Deck Attachment:		$A_{CD} := "Composite"$	Note: Use "Composite" or "Noncomposite"
Number of Lanes:		$N_{Lanes} := 2$	
Traffic Direction:		$Traffic := "1\text{-}way"$	Note: Use "1-way" or "2-way"

From WinBolts:	Year Built:	$y_b := 1980$
	ADDT:	$AADT := 4039$
	Year of AADT:	$Y_{AADT} := 2000$
	Future AADT:	$AADT_F := 5655$
	Year of Future AADT:	$Y_{AADT\_F} := 2020$
	Daily Truck Traffic:	$DTT := 12.49\%$

FATIGUE EVALUATION OF EXISTING BRIDGE

Designed by: JSB 3/9/15
Checked by: PFB 3/10/15

Fatigue Detail: Gusset Plate Weld to Bottom Flange

$$Fatigue\_Category := \begin{cases} \text{"E"} & \text{if } t_g < 1.0\cdot in \\ \text{" E' "} & \text{if } t_g \geq 1.0\cdot in \end{cases} = \text{"E"}$$

Fatigue Detail Location: Fatigue Detail Located within 0.1 of the Span on Either Side of an Interior Support for a Continuous Span:

$L_{FD\_NMR} := \text{"No"}$ Note: Use "Yes" or "No"

Fatigue Live Load Distribution Factor (AASHTO Fatigue 2.6):

$$D := \begin{cases} 17 & \text{if } L_{Span} \leq 30\cdot ft \\ 17 + \frac{(19-17)}{(40\cdot ft - 30\cdot ft)}\cdot\left(L_{Span} - 30\cdot ft\right) & \text{if } 30\cdot ft < L_{Span} \leq 40\cdot ft \\ 19 + \frac{(20-19)}{(60\cdot ft - 40\cdot ft)}\cdot\left(L_{Span} - 40\cdot ft\right) & \text{if } 40\cdot ft < L_{Span} \leq 60\cdot ft \\ 20 + \frac{(22-20)}{(90\cdot ft - 60\cdot ft)}\cdot\left(L_{Span} - 60\cdot ft\right) & \text{if } 60\cdot ft < L_{Span} \leq 90\cdot ft \\ 22 + \frac{(23-22)}{(120\cdot ft - 90\cdot ft)}\cdot\left(L_{Span} - 90\cdot ft\right) & \text{if } 90\cdot ft < L_{Span} < 120\cdot ft \\ 23 & \text{if } L_{Span} \geq 120\cdot ft \end{cases} = 22.60$$

$$DF_i := \begin{cases} 2\cdot\frac{S_{interior}}{D\cdot ft} & \text{if } \frac{S_{interior}}{D\cdot ft} < \frac{S_{interior} - 3\cdot ft}{S_{interior}} \\ 2\cdot\frac{S_{interior} - 3\cdot ft}{S_{interior}} & \text{otherwise} \end{cases} = 0.60$$

FATIGUE EVALUATION OF EXISTING BRIDGE

Designed by: JSB 3/9/15
Checked by: PFB 3/10/15

From MDX: Composite Section of Girder at Fatigue Detail: (Midspan)

Moment of Inertia: $I := 85594in^4$

Distance to NA from Bottom Flange: $c_b := 45.50 \cdot in$

Maximum Moment at Fatigue Detail: (Midspan) $M := 440.96kip \cdot ft$

Stress Range

Compute Live Load Stress Range (AASHTO Fatigue 2.7):

Composite Concrete Deck Factor:

Positive Moment Region: $F_{Deck\_P} := \begin{cases} 1.15 & \text{if } A_{CD} = \text{"Composite"} \\ 1.30 & \text{if } A_{CD} = \text{"Noncomposite"} \end{cases} = 1.15$

Negative Moment Region: $F_{Deck\_N} := \begin{cases} 1.15 & \text{if } A_{CD} = \text{"Composite"} \\ 1.15 & \text{if } A_{CD} = \text{"Noncomposite"} \end{cases} = 1.15$

$$S_{rP} := \frac{0.75 \cdot M \cdot c_b}{I \cdot F_{Deck\_P}} = 1.83 \cdot ksi$$

Fatigue Truck Variables

$F_{s1} := 1.0$ (AASHTO Fatigue 2.1)

$F_{s2} := 1.0$ (AASHTO Fatigue 2.2)

$F_{s3} := 1.0$ (AASHTO Fatigue 2.6)

Truck Superposition (AASHTO Fatigue 2.3): Apply up to a 15% increase to the fatigue truck to account for unique truck conditions. Use 0%.

$Truck_{super} := 0\%$

Impact (AASHTO Fatigue 2.4): Assumes road is smooth with no rough surfaces

$Impact := 10\%$

FATIGUE EVALUATION OF EXISTING BRIDGE

Designed by: JSB 3/9/15
Checked by: PFB 3/10/15

Reliability Factor (AASHTO Fatigue 2.8):

Remaining Safe Life: Reliability Factor for for Redundant Members: $R_{so} := 1.35$

$R_s := R_{so} \cdot F_{s1} \cdot F_{s2} \cdot F_{s3} = 1.35$

Remaining Mean Life: $R_m := 1 \cdot F_{s1} \cdot F_{s2} \cdot F_{s3} = 1.00$

Remaining Life Variables

Fatigue_Category = "E"

Detail Constant (AASHTO Fatigue 3.3):

$$K := \begin{cases} 68 & \text{if Fatigue\_Category = "A"} \\ 33 & \text{if Fatigue\_Category = "B"} \\ 17 & \text{if Fatigue\_Category = " B' "} \\ 12 & \text{if Fatigue\_Category = "C"} \\ 6.0 & \text{if Fatigue\_Category = "D"} \\ 2.9 & \text{if Fatigue\_Category = "E"} \\ 1.1 & \text{if Fatigue\_Category = " E' "} \\ 2.9 & \text{if Fatigue\_Category = "F"} \end{cases} = 2.90$$

Stress Limiting Range (AASHTO Fatigue 3.3):

$$S_{FL} := \begin{cases} 8.8 \cdot ksi & \text{if Fatigue\_Category = "A"} \\ 5.9 \cdot ksi & \text{if Fatigue\_Category = "B"} \\ 4.4 \cdot ksi & \text{if Fatigue\_Category = " B' "} \\ 3.7 \cdot ksi & \text{if Fatigue\_Category = "C"} \\ 2.6 \cdot ksi & \text{if Fatigue\_Category = "D"} \\ 1.6 \cdot ksi & \text{if Fatigue\_Category = "E"} \\ 0.9 \cdot ksi & \text{if Fatigue\_Category = " E' "} \\ 2.9 \cdot ksi & \text{if Fatigue\_Category = "F"} \end{cases} = 1.60 \cdot ksi$$

Stress Cycles Per Truck Passage (AASHTO Fatigue 3.4):

$$C := \begin{cases} 1.0 & \text{if } T_{Span} = \text{"Simple"} \wedge L_{Span} \geq 40 \cdot ft \\ 1.8 & \text{if } T_{Span} = \text{"Simple"} \wedge L_{Span} < 40 \cdot ft \\ 1 + \dfrac{(L_{Span} - 80 \cdot ft)}{400 \cdot ft} & \text{if } T_{Span} = \text{"Continuous"} \wedge L_{FD\_NMR} = \text{"Yes"} \wedge L_{Span} \geq 80 \cdot ft \\ 1.0 & \text{if } T_{Span} = \text{"Continuous"} \wedge L_{FD\_NMR} = \text{"Yes"} \wedge 40 \cdot ft \leq L_{Span} < 80 \cdot ft \\ 1.5 & \text{if } T_{Span} = \text{"Continuous"} \wedge L_{FD\_NMR} = \text{"Yes"} \wedge L_{Span} < 40 \cdot ft \\ 1.0 & \text{if } T_{Span} = \text{"Continuous"} \wedge L_{Span} \geq 40 \cdot ft \\ 1.5 & \text{if } T_{Span} = \text{"Continuous"} \wedge L_{Span} < 40 \cdot ft \end{cases} = 1.00$$

FATIGUE EVALUATION OF EXISTING BRIDGE

Designed by: JSB 3/9/15
Checked by: PFB 3/10/15

Growth Rate: $g := \left(\frac{AADT_F}{AADT}\right)^{\left[\frac{1}{(Y_{AADT\_F} - Y_{AADT})}\right]} - 1 = 0.017$

Calculate AADT for Original Construction Year: $AADT_{OCY} := \frac{AADT}{(1+g)^{(Y_{AADT} - y_b)}} = 2884.80$

Calculate AADT for Present (2014): $AADT_{2014} := \frac{AADT}{(1+g)^{(Y_{AADT} - 2014)}} = 5111.93$

Fraction of Trucks: $F_T := DTT = 0.12$

Fraction of Trucks in Outer Lane: (AASHTO Fatigue 3.5)

$$F_L := \begin{cases} 0.60 & \text{if } N_{Lanes} = 2 \wedge Traffic = \text{"2-way"} \\ 0.50 & \text{if } N_{Lanes} = 3 \wedge Traffic = \text{"2-way"} \\ 0.45 & \text{if } N_{Lanes} = 4 \wedge Traffic = \text{"2-way"} \\ 0.45 & \text{if } N_{Lanes} = 5 \wedge Traffic = \text{"2-way"} \\ 0.40 & \text{if } N_{Lanes} \geq 6 \wedge Traffic = \text{"2-way"} \\ 1.00 & \text{if } N_{Lanes} = 1 \wedge Traffic = \text{"1-way"} \\ 0.85 & \text{if } N_{Lanes} = 2 \wedge Traffic = \text{"1-way"} \\ 0.80 & \text{if } N_{Lanes} \geq 3 \wedge Traffic = \text{"1-way"} \end{cases} = 0.85$$

Average Daily Truck Volume in the Outer lane for the Past Period (AASHTO Fatigue 3.2 & 3.5):

$T_{OCY} := AADT_{OCY} \cdot F_T \cdot F_L = 306.26$

$T_{2014} := AADT_{2014} \cdot F_T \cdot F_L = 542.71$

$T_P := \frac{(T_{OCY} + T_{2014})}{2} = 424.49$

Average Daily Truck Volume in the Outer lane for the Future Remaining Life Period (AASHTO Fatigue 3.2 & 3.5):

Present Age of Bridge: $a := 0$

Growth Rate: $g = 1.70 \cdot \%$

AASHTO Fatigue Figure 3.5A: $Ratio_{Ta\_T} := 1.28$

$T_N := Ratio_{Ta\_T} \cdot T_P = 543.34$

FATIGUE EVALUATION OF EXISTING BRIDGE

Designed by: JSB 3/9/15
Checked by: PFB 3/10/15

Infinite Remaining Safe Fatigue Life (AASHTO Fatigue 3.1)

$$Safe\_Fatigue\_Life := \begin{cases} \text{"Infinite"} & \text{if } R_s \cdot S_{rP} < S_{FL} \\ \text{"Finite"} & \text{otherwise} \end{cases} = \text{"Finite"}$$

Finite Remaining Safe Fatigue Life (AASHTO Fatigue 3.2 - Alternative 1)

Present Age of Bridge: $Y_P := 2014 - y_b = 34.00$

Ratio of Fatigue Truck Weight for Past Period to Gross Weight of Fatigue Truck: $Ratio_{Wp\_W} := 1$

Ratio of Fatigue Truck Weight for Future Remaining Life Period to Gross Weight of Fatigue Truck: $Ratio_{Wn\_W} := 1$

Remaining Safe Life Factor: $f_s := 1.0$

Safe Fatigue Life Based on Past Volume: & Fatigue Truck Weight (Years)

$$Y_{l\_s} := \frac{f_s \cdot K \cdot 10^6}{T_P \cdot C \cdot \left(R_s \cdot \frac{S_{rP}}{ksi} \cdot Ratio_{Wp\_W} \right)^3} = 449.78$$

Safe Fatigue Life Based on Future Volume: & Fatigue Truck Weight (Years)

$$Y_{N\_s} := \frac{f_s \cdot K \cdot 10^6}{T_N \cdot C \cdot \left(R_s \cdot \frac{S_{rP}}{ksi} \cdot Ratio_{Wn\_W} \right)^3} = 351.39$$

Remaining Safe Fatigue Life (Years):

$$Y_{f\_s} := Y_{N\_s} \cdot \left[1 - \left(\frac{Y_P}{Y_{l\_s}} \right) \right] = 324.83$$

Finite Remaining Mean Fatigue Life (AASHTO Fatigue 3.2 - Alternative 1)

Remaining Mean Life Factor: $f_m := 2.0$

Mean Fatigue Life Based on Past Volume: & Fatigue Truck Weight (Years)

$$Y_{l\_m} := \frac{f_m \cdot K \cdot 10^6}{T_P \cdot C \cdot \left(R_m \cdot \frac{S_{rP}}{ksi} Ratio_{Wp\_W} \right)^3} = 2213.24$$

Mean Fatigue Life Based on Future Volume: & Fatigue Truck Weight (Years)

$$Y_{N\_m} := \frac{f_m \cdot K \cdot 10^6}{T_N \cdot C \cdot \left(R_m \cdot \frac{S_{rP}}{ksi} \cdot Ratio_{Wn\_W} \right)^3} = 1729.09$$

Remaining Mean Fatigue Life (Years):

$$Y_{f\_m} := Y_{N\_m} \cdot \left[1 - \left(\frac{Y_P}{Y_{l\_m}} \right) \right] = 1702.53$$

FATIGUE EVALUATION OF EXISTING BRIDGE

Designed by: JSB 3/9/15
Checked by: PFB 3/10/15

Structure

BIN 1069100, Span 3, G304 (G4), Bottom Flange
Carried: I-81 SB to I-481 NB
Crossed: I-81

Design Code

The fatigue evaluation of the existing bridge is performed in accordance with the AASHTO Guide Specifications for Fatigue Evaluations of Existing Steel Bridges, 1990. This reference is referred to as "AASHTO Fatigue."

Template Instructions

Values highlighted green are values to be input by the user.

Blue note text gives instructions or commentary for the template.

Red italic text in parentheses gives commentary specific to this structure.

Bridge Parameters

Span Length:	Span 1:	$L_{Span} := 108.905ft$	
Span Type:		$T_{Span} := "Simple"$	Note: Use "Simple" or "Continuous"
Girder Spacing		$S_{interior} := 6.83ft$	
Location of Fatigue Detail:		Bottom flange at midspan (Gusset plate welded to tension flange, controlling location)	
Gusset Plate Thickness:		$t_g := 0.375 \cdot in$	
Concrete Deck Attachment:		$A_{CD} := "Composite"$	Note: Use "Composite" or "Noncomposite"
Number of Lanes:		$N_{Lanes} := 2$	
Traffic Direction:		$Traffic := "1\text{-}way"$	Note: Use "1-way" or "2-way"

From WinBolts:	Year Built:	$y_b := 1980$
	ADDT:	$AADT := 4039$
	Year of AADT:	$Y_{AADT} := 2000$
	Future AADT:	$AADT_F := 5655$
	Year of Future AADT:	$Y_{AADT\_F} := 2020$
	Daily Truck Traffic:	$DTT := 12.49\%$

FATIGUE EVALUATION OF EXISTING BRIDGE

Designed by: JSB 3/9/15
Checked by: PFB 3/10/15

Fatigue Detail: Gusset Plate Weld to Bottom Flange

$$Fatigue\_Category := \begin{cases} \text{"E"} & \text{if } t_g < 1.0\cdot in \\ \text{" E' "} & \text{if } t_g \geq 1.0\cdot in \end{cases} = \text{"E"}$$

Fatigue Detail Location: Fatigue Detail Located within 0.1 of the Span on Either Side of an Interior Support for a Continuous Span:

$L_{FD\_NMR} := \text{"No"}$ Note: Use "Yes" or "No"

Fatigue Live Load Distribution Factor (AASHTO Fatigue 2.6):

$$D := \begin{cases} 17 & \text{if } L_{Span} \leq 30\cdot ft \\ 17 + \frac{(19-17)}{(40\cdot ft - 30\cdot ft)}\cdot\left(L_{Span} - 30\cdot ft\right) & \text{if } 30\cdot ft < L_{Span} \leq 40\cdot ft \\ 19 + \frac{(20-19)}{(60\cdot ft - 40\cdot ft)}\cdot\left(L_{Span} - 40\cdot ft\right) & \text{if } 40\cdot ft < L_{Span} \leq 60\cdot ft \\ 20 + \frac{(22-20)}{(90\cdot ft - 60\cdot ft)}\cdot\left(L_{Span} - 60\cdot ft\right) & \text{if } 60\cdot ft < L_{Span} \leq 90\cdot ft \\ 22 + \frac{(23-22)}{(120\cdot ft - 90\cdot ft)}\cdot\left(L_{Span} - 90\cdot ft\right) & \text{if } 90\cdot ft < L_{Span} < 120\cdot ft \\ 23 & \text{if } L_{Span} \geq 120\cdot ft \end{cases} = 22.63$$

$$DF_i := \begin{cases} 2\cdot\frac{S_{interior}}{D\cdot ft} & \text{if } \frac{S_{interior}}{D\cdot ft} < \frac{S_{interior} - 3\cdot ft}{S_{interior}} \\ 2\cdot\frac{S_{interior} - 3\cdot ft}{S_{interior}} & \text{otherwise} \end{cases} = 0.60$$

FATIGUE EVALUATION OF EXISTING BRIDGE

Designed by: JSB 3/9/15
Checked by: PFB 3/10/15

From MDX: Composite Section of Girder at Fatigue Detail: (Midspan)

Moment of Inertia: $I := 85594in^4$

Distance to NA from Bottom Flange: $c_b := 45.50 \cdot in$

Maximum Moment at Fatigue Detail: (Midspan) $M := 413.46kip \cdot ft$

Stress Range

Compute Live Load Stress Range (AASHTO Fatigue 2.7):

Composite Concrete Deck Factor:

Positive Moment Region: $F_{Deck\_P} := \begin{cases} 1.15 & \text{if } A_{CD} = \text{"Composite"} \\ 1.30 & \text{if } A_{CD} = \text{"Noncomposite"} \end{cases} = 1.15$

Negative Moment Region: $F_{Deck\_N} := \begin{cases} 1.15 & \text{if } A_{CD} = \text{"Composite"} \\ 1.15 & \text{if } A_{CD} = \text{"Noncomposite"} \end{cases} = 1.15$

$$S_{rP} := \frac{0.75 \cdot M \cdot c_b}{I \cdot F_{Deck\_P}} = 1.72 \cdot ksi$$

Fatigue Truck Variables

$F_{s1} := 1.0$ (AASHTO Fatigue 2.1)

$F_{s2} := 1.0$ (AASHTO Fatigue 2.2)

$F_{s3} := 1.0$ (AASHTO Fatigue 2.6)

Truck Superposition (AASHTO Fatigue 2.3): Apply up to a 15% increase to the fatigue truck to account for unique truck conditions. Use 0%.

$Truck_{super} := 0\%$

Impact (AASHTO Fatigue 2.4): Assumes road is smooth with no rough surfaces

$Impact := 10\%$

FATIGUE EVALUATION OF EXISTING BRIDGE

Designed by: JSB 3/9/15
Checked by: PFB 3/10/15

Reliability Factor (AASHTO Fatigue 2.8):

Remaining Safe Life: Reliability Factor for for Redundant Members: $R_{so} := 1.35$

$R_s := R_{so} \cdot F_{s1} \cdot F_{s2} \cdot F_{s3} = 1.35$

Remaining Mean Life: $R_m := 1 \cdot F_{s1} \cdot F_{s2} \cdot F_{s3} = 1.00$

Remaining Life Variables

Fatigue_Category = "E"

Detail Constant (AASHTO Fatigue 3.3):

$$K := \begin{cases} 68 & \text{if Fatigue\_Category = "A"} \\ 33 & \text{if Fatigue\_Category = "B"} \\ 17 & \text{if Fatigue\_Category = " B' "} \\ 12 & \text{if Fatigue\_Category = "C"} \\ 6.0 & \text{if Fatigue\_Category = "D"} \\ 2.9 & \text{if Fatigue\_Category = "E"} \\ 1.1 & \text{if Fatigue\_Category = " E' "} \\ 2.9 & \text{if Fatigue\_Category = "F"} \end{cases} = 2.90$$

Stress Limiting Range (AASHTO Fatigue 3.3):

$$S_{FL} := \begin{cases} 8.8 \cdot ksi & \text{if Fatigue\_Category = "A"} \\ 5.9 \cdot ksi & \text{if Fatigue\_Category = "B"} \\ 4.4 \cdot ksi & \text{if Fatigue\_Category = " B' "} \\ 3.7 \cdot ksi & \text{if Fatigue\_Category = "C"} \\ 2.6 \cdot ksi & \text{if Fatigue\_Category = "D"} \\ 1.6 \cdot ksi & \text{if Fatigue\_Category = "E"} \\ 0.9 \cdot ksi & \text{if Fatigue\_Category = " E' "} \\ 2.9 \cdot ksi & \text{if Fatigue\_Category = "F"} \end{cases} = 1.60 \cdot ksi$$

Stress Cycles Per Truck Passage (AASHTO Fatigue 3.4):

$$C := \begin{cases} 1.0 & \text{if } T_{Span} = \text{"Simple"} \wedge L_{Span} \geq 40 \cdot ft \\ 1.8 & \text{if } T_{Span} = \text{"Simple"} \wedge L_{Span} < 40 \cdot ft \\ 1 + \dfrac{(L_{Span} - 80 \cdot ft)}{400 \cdot ft} & \text{if } T_{Span} = \text{"Continuous"} \wedge L_{FD\_NMR} = \text{"Yes"} \wedge L_{Span} \geq 80 \cdot ft \\ 1.0 & \text{if } T_{Span} = \text{"Continuous"} \wedge L_{FD\_NMR} = \text{"Yes"} \wedge 40 \cdot ft \leq L_{Span} < 80 \cdot ft \\ 1.5 & \text{if } T_{Span} = \text{"Continuous"} \wedge L_{FD\_NMR} = \text{"Yes"} \wedge L_{Span} < 40 \cdot ft \\ 1.0 & \text{if } T_{Span} = \text{"Continuous"} \wedge L_{Span} \geq 40 \cdot ft \\ 1.5 & \text{if } T_{Span} = \text{"Continuous"} \wedge L_{Span} < 40 \cdot ft \end{cases} = 1.00$$

FATIGUE EVALUATION OF EXISTING BRIDGE

Designed by: JSB 3/9/15
Checked by: PFB 3/10/15

Growth Rate: $g := \left(\frac{AADT_F}{AADT}\right)^{\left[\frac{1}{\left(Y_{AADT\_F} - Y_{AADT}\right)}\right]} - 1 = 0.017$

Calculate AADT for Original Construction Year: $AADT_{OCY} := \frac{AADT}{(1+g)^{\left(Y_{AADT} - y_b\right)}} = 2884.80$

Calculate AADT for Present (2014): $AADT_{2014} := \frac{AADT}{(1+g)^{\left(Y_{AADT} - 2014\right)}} = 5111.93$

Fraction of Trucks: $F_T := DTT = 0.12$

Fraction of Trucks in Outer Lane: (AASHTO Fatigue 3.5)

$$F_L := \begin{cases} 0.60 & \text{if } N_{Lanes} = 2 \wedge Traffic = \text{"2-way"} \\ 0.50 & \text{if } N_{Lanes} = 3 \wedge Traffic = \text{"2-way"} \\ 0.45 & \text{if } N_{Lanes} = 4 \wedge Traffic = \text{"2-way"} \\ 0.45 & \text{if } N_{Lanes} = 5 \wedge Traffic = \text{"2-way"} \\ 0.40 & \text{if } N_{Lanes} \geq 6 \wedge Traffic = \text{"2-way"} \\ 1.00 & \text{if } N_{Lanes} = 1 \wedge Traffic = \text{"1-way"} \\ 0.85 & \text{if } N_{Lanes} = 2 \wedge Traffic = \text{"1-way"} \\ 0.80 & \text{if } N_{Lanes} \geq 3 \wedge Traffic = \text{"1-way"} \end{cases} = 0.85$$

Average Daily Truck Volume in the Outer lane for the Past Period (AASHTO Fatigue 3.2 & 3.5):

$T_{OCY} := AADT_{OCY} \cdot F_T \cdot F_L = 306.26$

$T_{2014} := AADT_{2014} \cdot F_T \cdot F_L = 542.71$

$T_P := \frac{\left(T_{OCY} + T_{2014}\right)}{2} = 424.49$

Average Daily Truck Volume in the Outer lane for the Future Remaining Life Period (AASHTO Fatigue 3.2 & 3.5):

Present Age of Bridge: $a := 0$

Growth Rate: $g = 1.70 \cdot \%$

AASHTO Fatigue Figure 3.5A: $Ratio_{Ta\_T} := 1.28$

$T_N := Ratio_{Ta\_T} \cdot T_P = 543.34$

FATIGUE EVALUATION OF EXISTING BRIDGE

Designed by: JSB 3/9/15
Checked by: PFB 3/10/15

Infinite Remaining Safe Fatigue Life (AASHTO Fatigue 3.1)

$$Safe\_Fatigue\_Life := \begin{cases} \text{"Infinite"} & \text{if } R_s \cdot S_{rP} < S_{FL} \\ \text{"Finite"} & \text{otherwise} \end{cases} = \text{"Finite"}$$

Finite Remaining Safe Fatigue Life (AASHTO Fatigue 3.2 - Alternative 1)

Present Age of Bridge: $Y_P := 2014 - y_b = 34.00$

Ratio of Fatigue Truck Weight for Past Period to Gross Weight of Fatigue Truck: $Ratio_{Wp\_W} := 1$

Ratio of Fatigue Truck Weight for Future Remaining Life Period to Gross Weight of Fatigue Truck: $Ratio_{Wn\_W} := 1$

Remaining Safe Life Factor: $f_s := 1.0$

Safe Fatigue Life Based on Past Volume: & Fatigue Truck Weight (Years)

$$Y_{l\_s} := \frac{f_s \cdot K \cdot 10^6}{T_P \cdot C \cdot \left(R_s \cdot \frac{S_{rP}}{ksi} \cdot Ratio_{Wp\_W} \right)^3} = 545.63$$

Safe Fatigue Life Based on Future Volume: & Fatigue Truck Weight (Years)

$$Y_{N\_s} := \frac{f_s \cdot K \cdot 10^6}{T_N \cdot C \cdot \left(R_s \cdot \frac{S_{rP}}{ksi} \cdot Ratio_{Wn\_W} \right)^3} = 426.27$$

Remaining Safe Fatigue Life (Years):

$$Y_{f\_s} := Y_{N\_s} \cdot \left[1 - \left(\frac{Y_P}{Y_{l\_s}} \right) \right] = 399.71$$

Finite Remaining Mean Fatigue Life (AASHTO Fatigue 3.2 - Alternative 1)

Remaining Mean Life Factor: $f_m := 2.0$

Mean Fatigue Life Based on Past Volume: & Fatigue Truck Weight (Years)

$$Y_{l\_m} := \frac{f_m \cdot K \cdot 10^6}{T_P \cdot C \cdot \left(R_m \cdot \frac{S_{rP}}{ksi} Ratio_{Wp\_W} \right)^3} = 2684.88$$

Mean Fatigue Life Based on Future Volume: & Fatigue Truck Weight (Years)

$$Y_{N\_m} := \frac{f_m \cdot K \cdot 10^6}{T_N \cdot C \cdot \left(R_m \cdot \frac{S_{rP}}{ksi} \cdot Ratio_{Wn\_W} \right)^3} = 2097.57$$

Remaining Mean Fatigue Life (Years):

$$Y_{f\_m} := Y_{N\_m} \cdot \left[1 - \left(\frac{Y_P}{Y_{l\_m}} \right) \right] = 2071.00$$

FATIGUE EVALUATION OF EXISTING BRIDGE

Designed by: JSB 3/9/15
Checked by: PFB 3/10/15

Structure

BIN 1069100, Span 3, G305 (G3), Bottom Flange
Carried: I-81 SB to I-481 NB
Crossed: I-81

Design Code

The fatigue evaluation of the existing bridge is performed in accordance with the AASHTO Guide Specifications for Fatigue Evaluations of Existing Steel Bridges, 1990. This reference is referred to as "AASHTO Fatigue."

Template Instructions

Values highlighted green are values to be input by the user.

Blue note text gives instructions or commentary for the template.

Red italic text in parentheses gives commentary specific to this structure.

Bridge Parameters

Span Length:	Span 1:	$L_{Span} := 109.736ft$	
Span Type:		$T_{Span} := "Simple"$	Note: Use "Simple" or "Continuous"
Girder Spacing		$S_{interior} := 6.83ft$	
Location of Fatigue Detail:		Bottom flange at midspan (Gusset plate welded to tension flange, controlling location)	
Gusset Plate Thickness:		$t_g := 0.375 \cdot in$	
Concrete Deck Attachment:		$A_{CD} := "Composite"$	Note: Use "Composite" or "Noncomposite"
Number of Lanes:		$N_{Lanes} := 2$	
Traffic Direction:		$Traffic := "1\text{-}way"$	Note: Use "1-way" or "2-way"

From WinBolts:	Year Built:	$y_b := 1980$
	ADDT:	$AADT := 4039$
	Year of AADT:	$Y_{AADT} := 2000$
	Future AADT:	$AADT_F := 5655$
	Year of Future AADT:	$Y_{AADT\_F} := 2020$
	Daily Truck Traffic:	$DTT := 12.49\%$

FATIGUE EVALUATION OF EXISTING BRIDGE

Designed by: JSB 3/9/15
Checked by: PFB 3/10/15

Fatigue Detail: Gusset Plate Weld to Bottom Flange

$$Fatigue\_Category := \begin{cases} \text{"E"} & \text{if } t_g < 1.0\cdot in \\ \text{" E' "} & \text{if } t_g \geq 1.0\cdot in \end{cases} = \text{"E"}$$

Fatigue Detail Location: Fatigue Detail Located within 0.1 of the Span on Either Side of an Interior Support for a Continuous Span:

$L_{FD\_NMR} := \text{"No"}$ Note: Use "Yes" or "No"

Fatigue Live Load Distribution Factor (AASHTO Fatigue 2.6):

$$D := \begin{cases} 17 & \text{if } L_{Span} \leq 30\cdot ft \\ 17 + \frac{(19-17)}{(40\cdot ft - 30\cdot ft)}\cdot\left(L_{Span} - 30\cdot ft\right) & \text{if } 30\cdot ft < L_{Span} \leq 40\cdot ft \\ 19 + \frac{(20-19)}{(60\cdot ft - 40\cdot ft)}\cdot\left(L_{Span} - 40\cdot ft\right) & \text{if } 40\cdot ft < L_{Span} \leq 60\cdot ft \\ 20 + \frac{(22-20)}{(90\cdot ft - 60\cdot ft)}\cdot\left(L_{Span} - 60\cdot ft\right) & \text{if } 60\cdot ft < L_{Span} \leq 90\cdot ft \\ 22 + \frac{(23-22)}{(120\cdot ft - 90\cdot ft)}\cdot\left(L_{Span} - 90\cdot ft\right) & \text{if } 90\cdot ft < L_{Span} < 120\cdot ft \\ 23 & \text{if } L_{Span} \geq 120\cdot ft \end{cases} = 22.66$$

$$DF_i := \begin{cases} 2\cdot\frac{S_{interior}}{D\cdot ft} & \text{if } \frac{S_{interior}}{D\cdot ft} < \frac{S_{interior} - 3\cdot ft}{S_{interior}} \\ 2\cdot\frac{S_{interior} - 3\cdot ft}{S_{interior}} & \text{otherwise} \end{cases} = 0.60$$

FATIGUE EVALUATION OF EXISTING BRIDGE

Designed by: JSB 3/9/15
Checked by: PFB 3/10/15

From MDX: Composite Section of Girder at Fatigue Detail: (Midspan)

Moment of Inertia: $I := 85594in^4$

Distance to NA from Bottom Flange: $c_b := 45.50 \cdot in$

Maximum Moment at Fatigue Detail: (Midspan) $M := 414.86kip \cdot ft$

Stress Range

Compute Live Load Stress Range (AASHTO Fatigue 2.7):

Composite Concrete Deck Factor:

Positive Moment Region: $F_{Deck\_P} := \begin{cases} 1.15 & \text{if } A_{CD} = \text{"Composite"} \\ 1.30 & \text{if } A_{CD} = \text{"Noncomposite"} \end{cases} = 1.15$

Negative Moment Region: $F_{Deck\_N} := \begin{cases} 1.15 & \text{if } A_{CD} = \text{"Composite"} \\ 1.15 & \text{if } A_{CD} = \text{"Noncomposite"} \end{cases} = 1.15$

$$S_{rP} := \frac{0.75 \cdot M \cdot c_b}{I \cdot F_{Deck\_P}} = 1.73 \cdot ksi$$

Fatigue Truck Variables

$F_{s1} := 1.0$ (AASHTO Fatigue 2.1)

$F_{s2} := 1.0$ (AASHTO Fatigue 2.2)

$F_{s3} := 1.0$ (AASHTO Fatigue 2.6)

Truck Superposition (AASHTO Fatigue 2.3): Apply up to a 15% increase to the fatigue truck to account for unique truck conditions. Use 0%.

$Truck_{super} := 0\%$

Impact (AASHTO Fatigue 2.4): Assumes road is smooth with no rough surfaces

$Impact := 10\%$

FATIGUE EVALUATION OF EXISTING BRIDGE

Designed by: JSB 3/9/15
Checked by: PFB 3/10/15

Reliability Factor (AASHTO Fatigue 2.8):

Remaining Safe Life: Reliability Factor for for Redundant Members: $R_{so} := 1.35$

$R_s := R_{so} \cdot F_{s1} \cdot F_{s2} \cdot F_{s3} = 1.35$

Remaining Mean Life: $R_m := 1 \cdot F_{s1} \cdot F_{s2} \cdot F_{s3} = 1.00$

Remaining Life Variables

Fatigue_Category = "E"

Detail Constant (AASHTO Fatigue 3.3):

$$K := \begin{cases} 68 & \text{if Fatigue\_Category = "A"} \\ 33 & \text{if Fatigue\_Category = "B"} \\ 17 & \text{if Fatigue\_Category = " B' "} \\ 12 & \text{if Fatigue\_Category = "C"} \\ 6.0 & \text{if Fatigue\_Category = "D"} \\ 2.9 & \text{if Fatigue\_Category = "E"} \\ 1.1 & \text{if Fatigue\_Category = " E' "} \\ 2.9 & \text{if Fatigue\_Category = "F"} \end{cases} = 2.90$$

Stress Limiting Range (AASHTO Fatigue 3.3):

$$S_{FL} := \begin{cases} 8.8 \cdot ksi & \text{if Fatigue\_Category = "A"} \\ 5.9 \cdot ksi & \text{if Fatigue\_Category = "B"} \\ 4.4 \cdot ksi & \text{if Fatigue\_Category = " B' "} \\ 3.7 \cdot ksi & \text{if Fatigue\_Category = "C"} \\ 2.6 \cdot ksi & \text{if Fatigue\_Category = "D"} \\ 1.6 \cdot ksi & \text{if Fatigue\_Category = "E"} \\ 0.9 \cdot ksi & \text{if Fatigue\_Category = " E' "} \\ 2.9 \cdot ksi & \text{if Fatigue\_Category = "F"} \end{cases} = 1.60 \cdot ksi$$

Stress Cycles Per Truck Passage (AASHTO Fatigue 3.4):

$$C := \begin{cases} 1.0 & \text{if } T_{Span} = \text{"Simple"} \wedge L_{Span} \geq 40 \cdot ft \\ 1.8 & \text{if } T_{Span} = \text{"Simple"} \wedge L_{Span} < 40 \cdot ft \\ 1 + \dfrac{(L_{Span} - 80 \cdot ft)}{400 \cdot ft} & \text{if } T_{Span} = \text{"Continuous"} \wedge L_{FD\_NMR} = \text{"Yes"} \wedge L_{Span} \geq 80 \cdot ft \\ 1.0 & \text{if } T_{Span} = \text{"Continuous"} \wedge L_{FD\_NMR} = \text{"Yes"} \wedge 40 \cdot ft \leq L_{Span} < 80 \cdot ft \\ 1.5 & \text{if } T_{Span} = \text{"Continuous"} \wedge L_{FD\_NMR} = \text{"Yes"} \wedge L_{Span} < 40 \cdot ft \\ 1.0 & \text{if } T_{Span} = \text{"Continuous"} \wedge L_{Span} \geq 40 \cdot ft \\ 1.5 & \text{if } T_{Span} = \text{"Continuous"} \wedge L_{Span} < 40 \cdot ft \end{cases} = 1.00$$

FATIGUE EVALUATION OF EXISTING BRIDGE

Designed by: JSB 3/9/15
Checked by: PFB 3/10/15

Growth Rate: $g := \left(\frac{AADT_F}{AADT}\right)^{\left[\frac{1}{\left(Y_{AADT\_F} - Y_{AADT}\right)}\right]} - 1 = 0.017$

Calculate AADT for Original Construction Year: $AADT_{OCY} := \frac{AADT}{(1+g)^{\left(Y_{AADT} - y_b\right)}} = 2884.80$

Calculate AADT for Present (2014): $AADT_{2014} := \frac{AADT}{(1+g)^{\left(Y_{AADT} - 2014\right)}} = 5111.93$

Fraction of Trucks: $F_T := DTT = 0.12$

Fraction of Trucks in Outer Lane: (AASHTO Fatigue 3.5)

$$F_L := \begin{cases} 0.60 & \text{if } N_{Lanes} = 2 \wedge Traffic = \text{"2-way"} \\ 0.50 & \text{if } N_{Lanes} = 3 \wedge Traffic = \text{"2-way"} \\ 0.45 & \text{if } N_{Lanes} = 4 \wedge Traffic = \text{"2-way"} \\ 0.45 & \text{if } N_{Lanes} = 5 \wedge Traffic = \text{"2-way"} \\ 0.40 & \text{if } N_{Lanes} \geq 6 \wedge Traffic = \text{"2-way"} \\ 1.00 & \text{if } N_{Lanes} = 1 \wedge Traffic = \text{"1-way"} \\ 0.85 & \text{if } N_{Lanes} = 2 \wedge Traffic = \text{"1-way"} \\ 0.80 & \text{if } N_{Lanes} \geq 3 \wedge Traffic = \text{"1-way"} \end{cases} = 0.85$$

Average Daily Truck Volume in the Outer lane for the Past Period (AASHTO Fatigue 3.2 & 3.5):

$T_{OCY} := AADT_{OCY} \cdot F_T \cdot F_L = 306.26$

$T_{2014} := AADT_{2014} \cdot F_T \cdot F_L = 542.71$

$T_P := \frac{\left(T_{OCY} + T_{2014}\right)}{2} = 424.49$

Average Daily Truck Volume in the Outer lane for the Future Remaining Life Period (AASHTO Fatigue 3.2 & 3.5):

Present Age of Bridge: $a := 0$

Growth Rate: $g = 1.70 \cdot \%$

AASHTO Fatigue Figure 3.5A: $Ratio_{Ta\_T} := 1.28$

$T_N := Ratio_{Ta\_T} \cdot T_P = 543.34$

FATIGUE EVALUATION OF EXISTING BRIDGE

Designed by: JSB 3/9/15
Checked by: PFB 3/10/15

Infinite Remaining Safe Fatigue Life (AASHTO Fatigue 3.1)

$$Safe\_Fatigue\_Life := \begin{cases} \text{"Infinite"} & \text{if } R_s \cdot S_{rP} < S_{FL} \\ \text{"Finite"} & \text{otherwise} \end{cases} = \text{"Finite"}$$

Finite Remaining Safe Fatigue Life (AASHTO Fatigue 3.2 - Alternative 1)

Present Age of Bridge: $Y_P := 2014 - y_b = 34.00$

Ratio of Fatigue Truck Weight for Past Period to Gross Weight of Fatigue Truck: $Ratio_{Wp\_W} := 1$

Ratio of Fatigue Truck Weight for Future Remaining Life Period to Gross Weight of Fatigue Truck: $Ratio_{Wn\_W} := 1$

Remaining Safe Life Factor: $f_s := 1.0$

Safe Fatigue Life Based on Past Volume: & Fatigue Truck Weight (Years)

$$Y_{l\_s} := \frac{f_s \cdot K \cdot 10^6}{T_P \cdot C \cdot \left(R_s \cdot \frac{S_{rP}}{ksi} \cdot Ratio_{Wp\_W} \right)^3} = 540.12$$

Safe Fatigue Life Based on Future Volume: & Fatigue Truck Weight (Years)

$$Y_{N\_s} := \frac{f_s \cdot K \cdot 10^6}{T_N \cdot C \cdot \left(R_s \cdot \frac{S_{rP}}{ksi} \cdot Ratio_{Wn\_W} \right)^3} = 421.97$$

Remaining Safe Fatigue Life (Years):

$$Y_{f\_s} := Y_{N\_s} \cdot \left[1 - \left(\frac{Y_P}{Y_{l\_s}} \right) \right] = 395.41$$

Finite Remaining Mean Fatigue Life (AASHTO Fatigue 3.2 - Alternative 1)

Remaining Mean Life Factor: $f_m := 2.0$

Mean Fatigue Life Based on Past Volume: & Fatigue Truck Weight (Years)

$$Y_{l\_m} := \frac{f_m \cdot K \cdot 10^6}{T_P \cdot C \cdot \left(R_m \cdot \frac{S_{rP}}{ksi} Ratio_{Wp\_W} \right)^3} = 2657.79$$

Mean Fatigue Life Based on Future Volume: & Fatigue Truck Weight (Years)

$$Y_{N\_m} := \frac{f_m \cdot K \cdot 10^6}{T_N \cdot C \cdot \left(R_m \cdot \frac{S_{rP}}{ksi} \cdot Ratio_{Wn\_W} \right)^3} = 2076.40$$

Remaining Mean Fatigue Life (Years):

$$Y_{f\_m} := Y_{N\_m} \cdot \left[1 - \left(\frac{Y_P}{Y_{l\_m}} \right) \right] = 2049.84$$

FATIGUE EVALUATION OF EXISTING BRIDGE

Designed by: JSB 3/9/15
Checked by: PFB 3/10/15

Structure

BIN 1069100, Span 3, G306 (G2), Bottom Flange
Carried: I-81 SB to I-481 NB
Crossed: I-81

Design Code

The fatigue evaluation of the existing bridge is performed in accordance with the AASHTO Guide Specifications for Fatigue Evaluations of Existing Steel Bridges, 1990. This reference is referred to as "AASHTO Fatigue."

Template Instructions

Values highlighted green are values to be input by the user.

Blue note text gives instructions or commentary for the template.

Red italic text in parentheses gives commentary specific to this structure.

Bridge Parameters

Span Length:	Span 1:	$L_{Span} := 110.566ft$	
Span Type:		$T_{Span} := "Simple"$	Note: Use "Simple" or "Continuous"
Girder Spacing		$S_{interior} := 6.83ft$	
Location of Fatigue Detail:		Bottom flange at midspan (Gusset plate welded to tension flange, controlling location)	
Gusset Plate Thickness:		$t_g := 0.375 \cdot in$	
Concrete Deck Attachment:		$A_{CD} := "Composite"$	Note: Use "Composite" or "Noncomposite"
Number of Lanes:		$N_{Lanes} := 2$	
Traffic Direction:		$Traffic := "1\text{-}way"$	Note: Use "1-way" or "2-way"

From WinBolts:	Year Built:	$y_b := 1980$
	ADDT:	$AADT := 4039$
	Year of AADT:	$Y_{AADT} := 2000$
	Future AADT:	$AADT_F := 5655$
	Year of Future AADT:	$Y_{AADT\_F} := 2020$
	Daily Truck Traffic:	$DTT := 12.49\%$

FATIGUE EVALUATION OF EXISTING BRIDGE

Designed by: JSB 3/9/15
Checked by: PFB 3/10/15

Fatigue Detail: Gusset Plate Weld to Bottom Flange

$$Fatigue\_Category := \begin{cases} \text{"E"} & \text{if } t_g < 1.0\cdot in \\ \text{" E' "} & \text{if } t_g \geq 1.0\cdot in \end{cases} = \text{"E"}$$

Fatigue Detail Location: Fatigue Detail Located within 0.1 of the Span on Either Side of an Interior Support for a Continuous Span:

$L_{FD\_NMR} := \text{"No"}$ Note: Use "Yes" or "No"

Fatigue Live Load Distribution Factor (AASHTO Fatigue 2.6):

$$D := \begin{cases} 17 & \text{if } L_{Span} \leq 30\cdot ft \\ 17 + \frac{(19-17)}{(40\cdot ft - 30\cdot ft)}\cdot\left(L_{Span} - 30\cdot ft\right) & \text{if } 30\cdot ft < L_{Span} \leq 40\cdot ft \\ 19 + \frac{(20-19)}{(60\cdot ft - 40\cdot ft)}\cdot\left(L_{Span} - 40\cdot ft\right) & \text{if } 40\cdot ft < L_{Span} \leq 60\cdot ft \\ 20 + \frac{(22-20)}{(90\cdot ft - 60\cdot ft)}\cdot\left(L_{Span} - 60\cdot ft\right) & \text{if } 60\cdot ft < L_{Span} \leq 90\cdot ft \\ 22 + \frac{(23-22)}{(120\cdot ft - 90\cdot ft)}\cdot\left(L_{Span} - 90\cdot ft\right) & \text{if } 90\cdot ft < L_{Span} < 120\cdot ft \\ 23 & \text{if } L_{Span} \geq 120\cdot ft \end{cases} = 22.69$$

$$DF_i := \begin{cases} 2\cdot\frac{S_{interior}}{D\cdot ft} & \text{if } \frac{S_{interior}}{D\cdot ft} < \frac{S_{interior} - 3\cdot ft}{S_{interior}} \\ 2\cdot\frac{S_{interior} - 3\cdot ft}{S_{interior}} & \text{otherwise} \end{cases} = 0.60$$

FATIGUE EVALUATION OF EXISTING BRIDGE

Designed by: JSB 3/9/15
Checked by: PFB 3/10/15

From MDX: Composite Section of Girder at Fatigue Detail: (Midspan)

Moment of Inertia: $I := 104071in^4$

Distance to NA from Bottom Flange: $c_b := 43.54 \cdot in$

Maximum Moment at Fatigue Detail: (Midspan) $M := 597.48kip \cdot ft$

Stress Range

Compute Live Load Stress Range (AASHTO Fatigue 2.7):

Composite Concrete Deck Factor:

Positive Moment Region: $F_{Deck\_P} := \begin{cases} 1.15 & \text{if } A_{CD} = \text{"Composite"} \\ 1.30 & \text{if } A_{CD} = \text{"Noncomposite"} \end{cases} = 1.15$

Negative Moment Region: $F_{Deck\_N} := \begin{cases} 1.15 & \text{if } A_{CD} = \text{"Composite"} \\ 1.15 & \text{if } A_{CD} = \text{"Noncomposite"} \end{cases} = 1.15$

$$S_{rP} := \frac{0.75 \cdot M \cdot c_b}{I \cdot F_{Deck\_P}} = 1.96 \cdot ksi$$

Fatigue Truck Variables

$F_{s1} := 1.0$ (AASHTO Fatigue 2.1)

$F_{s2} := 1.0$ (AASHTO Fatigue 2.2)

$F_{s3} := 1.0$ (AASHTO Fatigue 2.6)

Truck Superposition (AASHTO Fatigue 2.3): Apply up to a 15% increase to the fatigue truck to account for unique truck conditions. Use 0%.

$Truck_{super} := 0\%$

Impact (AASHTO Fatigue 2.4): Assumes road is smooth with no rough surfaces

$Impact := 10\%$

FATIGUE EVALUATION OF EXISTING BRIDGE

Designed by: JSB 3/9/15
Checked by: PFB 3/10/15

Reliability Factor (AASHTO Fatigue 2.8):

Remaining Safe Life: Reliability Factor for for Redundant Members: $R_{so} := 1.35$

$R_s := R_{so} \cdot F_{s1} \cdot F_{s2} \cdot F_{s3} = 1.35$

Remaining Mean Life: $R_m := 1 \cdot F_{s1} \cdot F_{s2} \cdot F_{s3} = 1.00$

Remaining Life Variables

Fatigue_Category = "E"

Detail Constant (AASHTO Fatigue 3.3):

$$K := \begin{cases} 68 & \text{if Fatigue\_Category = "A"} \\ 33 & \text{if Fatigue\_Category = "B"} \\ 17 & \text{if Fatigue\_Category = " B' "} \\ 12 & \text{if Fatigue\_Category = "C"} \\ 6.0 & \text{if Fatigue\_Category = "D"} \\ 2.9 & \text{if Fatigue\_Category = "E"} \\ 1.1 & \text{if Fatigue\_Category = " E' "} \\ 2.9 & \text{if Fatigue\_Category = "F"} \end{cases} = 2.90$$

Stress Limiting Range (AASHTO Fatigue 3.3):

$$S_{FL} := \begin{cases} 8.8 \cdot ksi & \text{if Fatigue\_Category = "A"} \\ 5.9 \cdot ksi & \text{if Fatigue\_Category = "B"} \\ 4.4 \cdot ksi & \text{if Fatigue\_Category = " B' "} \\ 3.7 \cdot ksi & \text{if Fatigue\_Category = "C"} \\ 2.6 \cdot ksi & \text{if Fatigue\_Category = "D"} \\ 1.6 \cdot ksi & \text{if Fatigue\_Category = "E"} \\ 0.9 \cdot ksi & \text{if Fatigue\_Category = " E' "} \\ 2.9 \cdot ksi & \text{if Fatigue\_Category = "F"} \end{cases} = 1.60 \cdot ksi$$

Stress Cycles Per Truck Passage (AASHTO Fatigue 3.4):

$$C := \begin{cases} 1.0 & \text{if } T_{Span} = \text{"Simple"} \wedge L_{Span} \geq 40 \cdot ft \\ 1.8 & \text{if } T_{Span} = \text{"Simple"} \wedge L_{Span} < 40 \cdot ft \\ 1 + \dfrac{(L_{Span} - 80 \cdot ft)}{400 \cdot ft} & \text{if } T_{Span} = \text{"Continuous"} \wedge L_{FD\_NMR} = \text{"Yes"} \wedge L_{Span} \geq 80 \cdot ft \\ 1.0 & \text{if } T_{Span} = \text{"Continuous"} \wedge L_{FD\_NMR} = \text{"Yes"} \wedge 40 \cdot ft \leq L_{Span} < 80 \cdot ft \\ 1.5 & \text{if } T_{Span} = \text{"Continuous"} \wedge L_{FD\_NMR} = \text{"Yes"} \wedge L_{Span} < 40 \cdot ft \\ 1.0 & \text{if } T_{Span} = \text{"Continuous"} \wedge L_{Span} \geq 40 \cdot ft \\ 1.5 & \text{if } T_{Span} = \text{"Continuous"} \wedge L_{Span} < 40 \cdot ft \end{cases} = 1.00$$

FATIGUE EVALUATION OF EXISTING BRIDGE

Designed by: JSB 3/9/15
Checked by: PFB 3/10/15

Growth Rate: $g := \left(\frac{AADT_F}{AADT}\right)^{\left[\frac{1}{(Y_{AADT\_F} - Y_{AADT})}\right]} - 1 = 0.017$

Calculate AADT for Original Construction Year: $AADT_{OCY} := \frac{AADT}{(1+g)^{(Y_{AADT} - y_b)}} = 2884.80$

Calculate AADT for Present (2014): $AADT_{2014} := \frac{AADT}{(1+g)^{(Y_{AADT} - 2014)}} = 5111.93$

Fraction of Trucks: $F_T := DTT = 0.12$

Fraction of Trucks in Outer Lane: (AASHTO Fatigue 3.5)

$$F_L := \begin{cases} 0.60 & \text{if } N_{Lanes} = 2 \wedge Traffic = \text{"2-way"} \\ 0.50 & \text{if } N_{Lanes} = 3 \wedge Traffic = \text{"2-way"} \\ 0.45 & \text{if } N_{Lanes} = 4 \wedge Traffic = \text{"2-way"} \\ 0.45 & \text{if } N_{Lanes} = 5 \wedge Traffic = \text{"2-way"} \\ 0.40 & \text{if } N_{Lanes} \geq 6 \wedge Traffic = \text{"2-way"} \\ 1.00 & \text{if } N_{Lanes} = 1 \wedge Traffic = \text{"1-way"} \\ 0.85 & \text{if } N_{Lanes} = 2 \wedge Traffic = \text{"1-way"} \\ 0.80 & \text{if } N_{Lanes} \geq 3 \wedge Traffic = \text{"1-way"} \end{cases} = 0.85$$

Average Daily Truck Volume in the Outer lane for the Past Period (AASHTO Fatigue 3.2 & 3.5):

$T_{OCY} := AADT_{OCY} \cdot F_T \cdot F_L = 306.26$

$T_{2014} := AADT_{2014} \cdot F_T \cdot F_L = 542.71$

$T_P := \frac{(T_{OCY} + T_{2014})}{2} = 424.49$

Average Daily Truck Volume in the Outer lane for the Future Remaining Life Period (AASHTO Fatigue 3.2 & 3.5):

Present Age of Bridge: $a := 0$

Growth Rate: $g = 1.70 \cdot \%$

AASHTO Fatigue Figure 3.5A: $Ratio_{Ta\_T} := 1.28$

$T_N := Ratio_{Ta\_T} \cdot T_P = 543.34$

FATIGUE EVALUATION OF EXISTING BRIDGE

Designed by: JSB 3/9/15
Checked by: PFB 3/10/15

Infinite Remaining Safe Fatigue Life (AASHTO Fatigue 3.1)

$$Safe\_Fatigue\_Life := \begin{cases} \text{"Infinite"} & \text{if } R_s \cdot S_{rP} < S_{FL} \\ \text{"Finite"} & \text{otherwise} \end{cases} = \text{"Finite"}$$

Finite Remaining Safe Fatigue Life (AASHTO Fatigue 3.2 - Alternative 1)

Present Age of Bridge: $Y_P := 2014 - y_b = 34.00$

Ratio of Fatigue Truck Weight for Past Period to Gross Weight of Fatigue Truck: $Ratio_{Wp\_W} := 1$

Ratio of Fatigue Truck Weight for Future Remaining Life Period to Gross Weight of Fatigue Truck: $Ratio_{Wn\_W} := 1$

Remaining Safe Life Factor: $f_s := 1.0$

Safe Fatigue Life Based on Past Volume & Fatigue Truck Weight (Years):

$$Y_{l\_s} := \frac{f_s \cdot K \cdot 10^6}{T_P \cdot C \cdot \left(R_s \cdot \frac{S_{rP}}{ksi} \cdot Ratio_{Wp\_W} \right)^3} = 370.90$$

Safe Fatigue Life Based on Future Volume & Fatigue Truck Weight (Years):

$$Y_{N\_s} := \frac{f_s \cdot K \cdot 10^6}{T_N \cdot C \cdot \left(R_s \cdot \frac{S_{rP}}{ksi} \cdot Ratio_{Wn\_W} \right)^3} = 289.76$$

Remaining Safe Fatigue Life (Years):

$$Y_{f\_s} := Y_{N\_s} \cdot \left[1 - \left(\frac{Y_P}{Y_{l\_s}} \right) \right] = 263.20$$

Finite Remaining Mean Fatigue Life (AASHTO Fatigue 3.2 - Alternative 1)

Remaining Mean Life Factor: $f_m := 2.0$

Mean Fatigue Life Based on Past Volume & Fatigue Truck Weight (Years):

$$Y_{l\_m} := \frac{f_m \cdot K \cdot 10^6}{T_P \cdot C \cdot \left(R_m \cdot \frac{S_{rP}}{ksi} Ratio_{Wp\_W} \right)^3} = 1825.09$$

Mean Fatigue Life Based on Future Volume & Fatigue Truck Weight (Years):

$$Y_{N\_m} := \frac{f_m \cdot K \cdot 10^6}{T_N \cdot C \cdot \left(R_m \cdot \frac{S_{rP}}{ksi} \cdot Ratio_{Wn\_W} \right)^3} = 1425.85$$

Remaining Mean Fatigue Life (Years):

$$Y_{f\_m} := Y_{N\_m} \cdot \left[1 - \left(\frac{Y_P}{Y_{l\_m}} \right) \right] = 1399.29$$

FATIGUE EVALUATION OF EXISTING BRIDGE

Designed by: JSB 3/6/15
Checked by: PFB 3/10/15

Structure

BIN 1069100, Span 3, G307 (G1), Bottom Flange
Carried: I-81 SB to I-481 NB
Crossed: I-81

Design Code

The fatigue evaluation of the existing bridge is performed in accordance with the AASHTO Guide Specifications for Fatigue Evaluations of Existing Steel Bridges, 1990. This reference is referred to as "AASHTO Fatigue."

Template Instructions

Values highlighted green are values to be input by the user.

Blue note text gives instructions or commentary for the template.

Red italic text in parentheses gives commentary specific to this structure.

Bridge Parameters

Span Length: Span 1: $L_{Span} := 111.3958ft$

Span Type: $T_{Span} := "Simple"$ Note: Use "Simple" or "Continuous"

Girder Spacing $S_{exterior} := 6.83ft$

Location of Fatigue Detail: Bottom flange at midspan (Gusset plate welded to tension flange, controlling location)

Gusset Plate Thickness: $t_g := 0.375 \cdot in$

Concrete Deck Attachment: $A_{CD} := "Composite"$ Note: Use "Composite" or "Noncomposite"

Number of Lanes: $N_{Lanes} := 2$

Traffic Direction: $Traffic := "1\text{-}way"$ Note: Use "1-way" or "2-way"

Minimum Shoulder Width: $B_{Shld} := 5.50 \cdot ft$

Overhang Width: $B_{Ovhg} := 1.50 \cdot ft$

Width of Exterior Lane: $B_{ExtLane} := 12.00 \cdot ft$

Distance From Fascia to Face of Rail/Curb: $D_{F\_FRC} := 1.50 \cdot ft$

From WinBolts:

Year Built: $y_b := 1980$

ADDT: $AADT := 4039$

Year of AADT: $Y_{AADT} := 2000$

Future AADT: $AADT_F := 5655$

Year of Future AADT: $Y_{AADT\_F} := 2020$

Daily Truck Traffic: $DTT := 12.49\%$

FATIGUE EVALUATION OF EXISTING BRIDGE

Designed by: JSB 3/6/15
Checked by: PFB 3/10/15

Fatigue Detail: Gusset Plate Weld to Bottom Flange

$$Fatigue\_Category := \begin{cases} \text{"E"} & \text{if } t_g < 1.0\cdot in \\ \text{" E' "} & \text{if } t_g \geq 1.0\cdot in \end{cases} = \text{"E"}$$

Fatigue Detail Location: Fatigue Detail Located within 0.1 of the Span on Either Side of an Interior Support for a Continuous Span:

$L_{FD\_NMR} := \text{"No"}$ Note: Use "Yes" or "No"

Fatigue Live Load Distribution Factor (AASHTO Fatigue 2.6):

$$D := \begin{cases} 17 & \text{if } L_{Span} \leq 30\cdot ft \\ 17 + \frac{(19-17)}{(40\cdot ft - 30\cdot ft)}\cdot\left(L_{Span} - 30\cdot ft\right) & \text{if } 30\cdot ft < L_{Span} \leq 40\cdot ft \\ 19 + \frac{(20-19)}{(60\cdot ft - 40\cdot ft)}\cdot\left(L_{Span} - 40\cdot ft\right) & \text{if } 40\cdot ft < L_{Span} \leq 60\cdot ft \\ 20 + \frac{(22-20)}{(90\cdot ft - 60\cdot ft)}\cdot\left(L_{Span} - 60\cdot ft\right) & \text{if } 60\cdot ft < L_{Span} \leq 90\cdot ft \\ 22 + \frac{(23-22)}{(120\cdot ft - 90\cdot ft)}\cdot\left(L_{Span} - 90\cdot ft\right) & \text{if } 90\cdot ft < L_{Span} < 120\cdot ft \\ 23 & \text{if } L_{Span} \geq 120\cdot ft \end{cases} = 22.71$$

Interior Girder Distribution Factor:

$$DF_i := \begin{cases} 2\cdot\frac{S_{exterior}}{D\cdot ft} & \text{if } \frac{S_{exterior}}{D\cdot ft} < \frac{S_{exterior} - 3\cdot ft}{S_{exterior}} \\ 2\cdot\frac{S_{exterior} - 3\cdot ft}{S_{exterior}} & \text{otherwise} \end{cases} = 0.60$$

Distance From Exterior Girder to Centerline: of Outer Lane Divided by Girder Spacing

$$P := \frac{D_{F\_FRC} + 0.5\cdot B_{ExtLane} - B_{Ovhg}}{S_{exterior}} = 0.88$$

FATIGUE EVALUATION OF EXISTING BRIDGE

Designed by: JSB 3/6/15
Checked by: PFB 3/10/15

Exterior Girder Distribution Factor:

$$DF := \begin{cases} DF_i & \text{if } \left(B_{Ovhg} - D_{F\_FRC}\right) < 1.0\cdot ft \vee B_{Shld} \geq 4\cdot ft \\ \text{if}\left[(0.7 - 0.4\cdot P) \geq DF_i, (0.7 - 0.4\cdot P), DF_i\right] & \text{if } \left(B_{Ovhg} - D_{F\_FRC}\right) > 1.0\cdot ft \wedge B_{Shld} < 4\cdot ft \wedge P > 0.5 \\ \text{if}\left[(0.9 - 0.8\cdot P) \geq DF_i, (0.9 - 0.8\cdot P), DF_i\right] & \text{if } \left(B_{Ovhg} - D_{F\_FRC}\right) > 1.0\cdot ft \wedge B_{Shld} < 4\cdot ft \wedge P < 0.5 \end{cases}$$

$DF = 0.60$

From MDX: Composite Section of Girder at Fatigue Detail: (Midspan)

Moment of Inertia: $I := 94261in^4$

Distance to NA from Bottom Flange: $c_b := 40.27\cdot in$

Maximum Moment at Fatigue Detail: (Midspan) $M := 885.63kip\cdot ft$

Stress Range

Compute Live Load Stress Range (AASHTO Fatigue 2.7):

Composite Concrete Deck Factor:

Positive Moment Region:

$$F_{Deck\_P} := \begin{cases} 1.15 & \text{if } A_{CD} = \text{"Composite"} \\ 1.30 & \text{if } A_{CD} = \text{"Noncomposite"} \end{cases} = 1.15$$

Negative Moment Region:

$$F_{Deck\_N} := \begin{cases} 1.15 & \text{if } A_{CD} = \text{"Composite"} \\ 1.15 & \text{if } A_{CD} = \text{"Noncomposite"} \end{cases} = 1.15$$

$$S_{rP} := \frac{0.75M\cdot c_b}{I\cdot F_{Deck\_P}} = 2.96\cdot ksi$$

Fatigue Truck Variables

$F_{s1} := 1.0$ (AASHTO Fatigue 2.1)

$F_{s2} := 1.0$ (AASHTO Fatigue 2.2)

$F_{s3} := 1.0$ (AASHTO Fatigue 2.6)

Truck Superposition (AASHTO Fatigue 2.3): Apply up to a 15% increase to the fatigue truck to account for unique truck conditions. Use 0%.

$Truck_{super} := 0\%$

Impact (AASHTO Fatigue 2.4): Assumes road is smooth with no rough surfaces

$Impact := 10\%$

FATIGUE EVALUATION OF EXISTING BRIDGE

Designed by: JSB 3/6/15
Checked by: PFB 3/10/15

Reliability Factor (AASHTO Fatigue 2.8):

Remaining Safe Life: Reliability Factor for for Redundant Members: $R_{so} := 1.35$

$R_s := R_{so} \cdot F_{s1} \cdot F_{s2} \cdot F_{s3} = 1.35$

Remaining Mean Life: $R_m := 1 \cdot F_{s1} \cdot F_{s2} \cdot F_{s3} = 1.00$

Remaining Life Variables

Fatigue_Category = "E"

Detail Constant (AASHTO Fatigue 3.3):

$$K := \begin{cases} 68 & \text{if Fatigue\_Category = "A"} \\ 33 & \text{if Fatigue\_Category = "B"} \\ 17 & \text{if Fatigue\_Category = " B' "} \\ 12 & \text{if Fatigue\_Category = "C"} \\ 6.0 & \text{if Fatigue\_Category = "D"} \\ 2.9 & \text{if Fatigue\_Category = "E"} \\ 1.1 & \text{if Fatigue\_Category = " E' "} \\ 2.9 & \text{if Fatigue\_Category = "F"} \end{cases} = 2.90$$

Stress Limiting Range (AASHTO Fatigue 3.3):

$$S_{FL} := \begin{cases} 8.8 \cdot ksi & \text{if Fatigue\_Category = "A"} \\ 5.9 \cdot ksi & \text{if Fatigue\_Category = "B"} \\ 4.4 \cdot ksi & \text{if Fatigue\_Category = " B' "} \\ 3.7 \cdot ksi & \text{if Fatigue\_Category = "C"} \\ 2.6 \cdot ksi & \text{if Fatigue\_Category = "D"} \\ 1.6 \cdot ksi & \text{if Fatigue\_Category = "E"} \\ 0.9 \cdot ksi & \text{if Fatigue\_Category = " E' "} \\ 2.9 \cdot ksi & \text{if Fatigue\_Category = "F"} \end{cases} = 1.60 \cdot ksi$$

Stress Cycles Per Truck Passage (AASHTO Fatigue 3.4):

$$C := \begin{cases} 1.0 & \text{if } T_{Span} = \text{"Simple"} \wedge L_{Span} \geq 40 \cdot ft \\ 1.8 & \text{if } T_{Span} = \text{"Simple"} \wedge L_{Span} < 40 \cdot ft \\ 1 + \dfrac{(L_{Span} - 80 \cdot ft)}{400 \cdot ft} & \text{if } T_{Span} = \text{"Continuous"} \wedge L_{FD\_NMR} = \text{"Yes"} \wedge L_{Span} \geq 80 \cdot ft \\ 1.0 & \text{if } T_{Span} = \text{"Continuous"} \wedge L_{FD\_NMR} = \text{"Yes"} \wedge 40 \cdot ft \leq L_{Span} < 80 \cdot ft \\ 1.5 & \text{if } T_{Span} = \text{"Continuous"} \wedge L_{FD\_NMR} = \text{"Yes"} \wedge L_{Span} < 40 \cdot ft \\ 1.0 & \text{if } T_{Span} = \text{"Continuous"} \wedge L_{Span} \geq 40 \cdot ft \\ 1.5 & \text{if } T_{Span} = \text{"Continuous"} \wedge L_{Span} < 40 \cdot ft \end{cases} = 1.00$$

FATIGUE EVALUATION OF EXISTING BRIDGE

Designed by: JSB 3/6/15
Checked by: PFB 3/10/15

Growth Rate: $g := \left(\frac{AADT_F}{AADT}\right)^{\left[\frac{1}{(Y_{AADT\_F} - Y_{AADT})}\right]} - 1 = 0.017$

Calculate AADT for Original Construction Year: $AADT_{OCY} := \frac{AADT}{(1+g)^{(Y_{AADT} - y_b)}} = 2884.80$

Calculate AADT for Present (2014): $AADT_{2014} := \frac{AADT}{(1+g)^{(Y_{AADT} - 2014)}} = 5111.93$

Fraction of Trucks: $F_T := DTT = 0.12$

Fraction of Trucks in Outer Lane: (AASHTO Fatigue 3.5)

$$F_L := \begin{cases} 0.60 & \text{if } N_{Lanes} = 2 \wedge Traffic = \text{"2-way"} \\ 0.50 & \text{if } N_{Lanes} = 3 \wedge Traffic = \text{"2-way"} \\ 0.45 & \text{if } N_{Lanes} = 4 \wedge Traffic = \text{"2-way"} \\ 0.45 & \text{if } N_{Lanes} = 5 \wedge Traffic = \text{"2-way"} \\ 0.40 & \text{if } N_{Lanes} \geq 6 \wedge Traffic = \text{"2-way"} \\ 1.00 & \text{if } N_{Lanes} = 1 \wedge Traffic = \text{"1-way"} \\ 0.85 & \text{if } N_{Lanes} = 2 \wedge Traffic = \text{"1-way"} \\ 0.80 & \text{if } N_{Lanes} \geq 3 \wedge Traffic = \text{"1-way"} \end{cases} = 0.85$$

Average Daily Truck Volume in the Outer lane for the Past Period (AASHTO Fatigue 3.2 & 3.5):

$T_{OCY} := AADT_{OCY} \cdot F_T \cdot F_L = 306.26$

$T_{2014} := AADT_{2014} \cdot F_T \cdot F_L = 542.71$

$T_P := \frac{(T_{OCY} + T_{2014})}{2} = 424.49$

Average Daily Truck Volume in the Outer lane for the Future Remaining Life Period (AASHTO Fatigue 3.2 & 3.5):

Present Age of Bridge: $a := 0$

Growth Rate: $g = 1.70 \cdot \%$

AASHTO Fatigue Figure 3.5A: $Ratio_{Ta\_T} := 1.28$

$T_N := Ratio_{Ta\_T} \cdot T_P = 543.34$

FATIGUE EVALUATION OF EXISTING BRIDGE

Designed by: JSB 3/6/15
Checked by: PFB 3/10/15

Infinite Remaining Safe Fatigue Life (AASHTO Fatigue 3.1)

$$Safe\_Fatigue\_Life := \begin{cases} \text{"Infinite"} & \text{if } R_s \cdot S_{rP} < S_{FL} \\ \text{"Finite"} & \text{otherwise} \end{cases} = \text{"Finite"}$$

Finite Remaining Safe Fatigue Life (AASHTO Fatigue 3.2 - Alternative 1)

Present Age of Bridge: $Y_P := 2014 - y_b = 34.00$

Ratio of Fatigue Truck Weight for Past Period to Gross Weight of Fatigue Truck: $Ratio_{Wp\_W} := 1$

Ratio of Fatigue Truck Weight for Future Remaining Life Period to Gross Weight of Fatigue Truck: $Ratio_{Wn\_W} := 1$

Remaining Safe Life Factor: $f_s := 1.0$

Safe Fatigue Life Based on Past Volume: & Fatigue Truck Weight (Years)

$$Y_{l\_s} := \frac{f_s \cdot K \cdot 10^6}{T_P \cdot C \cdot \left(R_s \cdot \frac{S_{rP}}{ksi} \cdot Ratio_{Wp\_W} \right)^3} = 106.95$$

Safe Fatigue Life Based on Future Volume: & Fatigue Truck Weight (Years)

$$Y_{N\_s} := \frac{f_s \cdot K \cdot 10^6}{T_N \cdot C \cdot \left(R_s \cdot \frac{S_{rP}}{ksi} \cdot Ratio_{Wn\_W} \right)^3} = 83.56$$

Remaining Safe Fatigue Life (Years):

$$Y_{f\_s} := Y_{N\_s} \cdot \left[1 - \left(\frac{Y_P}{Y_{l\_s}} \right) \right] = 56.99$$

Finite Remaining Mean Fatigue Life (AASHTO Fatigue 3.2 - Alternative 1)

Remaining Mean Life Factor: $f_m := 2.0$

Mean Fatigue Life Based on Past Volume: & Fatigue Truck Weight (Years)

$$Y_{l\_m} := \frac{f_m \cdot K \cdot 10^6}{T_P \cdot C \cdot \left(R_m \cdot \frac{S_{rP}}{ksi} Ratio_{Wp\_W} \right)^3} = 526.29$$

Mean Fatigue Life Based on Future Volume: & Fatigue Truck Weight (Years)

$$Y_{N\_m} := \frac{f_m \cdot K \cdot 10^6}{T_N \cdot C \cdot \left(R_m \cdot \frac{S_{rP}}{ksi} \cdot Ratio_{Wn\_W} \right)^3} = 411.16$$

Remaining Mean Fatigue Life (Years):

$$Y_{f\_m} := Y_{N\_m} \cdot \left[1 - \left(\frac{Y_P}{Y_{l\_m}} \right) \right] = 384.60$$

E. Recommendations:

The purpose of this deck evaluation is to document and determine existing conditions of the deck. It will be used as a tool for developing the scope of work and cost estimates for the development and comparison of alternatives for the overall project.

There are no delaminated areas (0%) on the deck and either of the approach slabs. Due to the age, condition and chloride-ion content of the bridge deck concrete, the bridge deck should be rehabilitated or replaced to meet current design standards and to mitigate excessive future maintenance costs.

Option 1 – Scarify and Bridge Deck Overlay
The maximum service life this option would provide is 25 years. The design life of this project is 30 years (ETC + 30). This option does not meet the project objective of obtaining 30+ years of service life.

Option 2 – Bridge Deck Rehabilitation with 100% Deep Removal
This option will involve partial depth reconstruction by exposing the top mat of rebar over the entire bridge deck to remove the chloride contaminated concrete (100% deep removal). The existing bridge deck thickness is 9 ¼" with 3 ¼" concrete cover over the top mat of reinforcing. The proposed partial depth reconstruction will include the addition of ¼" of concrete to provide the standard bridge deck thickness of 9 ½". The existing top mat of reinforcing bars will be removed and replaced to accommodate the standard 3" concrete cover. The existing non-conforming bridge railing will be removed and replaced with single-slope concrete barrier. The existing approach slabs will receive the same repair treatment as the deck. The existing original armor bridge joints and the elastomeric End Bridge Joint will be replaced with armorless bridge joints. This option would provide a service life of 35 years to the bridge deck. The construction cost of this option is $ 1.205 million.

Option 3 – Bridge Deck Replacement with Cast-In-Place Concrete

This option would involve the complete removal of the existing bridge deck, railing, bridge deck joints, and approach slabs. The bridge deck would be replaced with a new concrete deck, new single-slope concrete barrier, new approach slabs and new armorless bridge joints. The new bridge deck would be 9 ½" standard thickness as compared to the 9 ¼" existing thickness. This option would provide a service life of 40 years to the bridge deck. The construction cost of this option is $ 1.520 million.

Option 4 – Bridge Deck Replacement with Pre-cast Concrete Deck Panels

This option will have the highest construction cost of all the options; however, traffic control costs may be lower due to the reduced construction time. Comparison of accelerated construction versus conventional construction is beyond the scope of work for this project at this time.

IN-DEPTH INSPECTION REPORT

D031085 P.I.N. 3501.60

B.I.N. 1069110

TEAM LEADER Andrew J. Fuller, P.E. 59848
NYSPE LICENSE #

ASSISTANT TEAM LEADER Jeffrey M. Reina, P.E.
ASSISTANT TEAM LEADER Logan Bessel
ASSISTANT TEAM LEADER Jerome Getter

FEATURE CARRIED Brighton Avenue
FEATURE CROSSED I – 481 Northbound

DATE FIELD WORK BEGAN December 5, 2013
DATE FIELD WORK COMPLETED January 29, 2014

TABLE OF CONTENTS

- TP 349 & 350
- IN-DEPTH CONDITION DOCUMENTATION
- IN-DEPTH PHOTO DOCUMENTATION
- ASBESTOS REPORT

TP 349 & TP 350

BRIDGE ELEMENT RATINGS

Inspection Date: 10/25/2012 RC: 33 BIN: 1069110

Bridge Ratings

Carried: BRIGHTON AVE Crossed: I481RAMPFROMI81SB CheckValue: 1,799,008,995

Inspection Agency: 10 - NYSDOT Type of Inspection: 1 - BIENNIAL
GTMS: 302 -- Steel - Stringer/Multi-Beam or Girder
POSTINGS: See Gen Rec Page 1 for Postings at time of inspection.
Further Investigation Needed: No
State Highway Number: 000000 Milepoint: 0.33 AADT/Yr: 7999 / 1998
Orientation: 1 - North Political Unit: 2055 - City of SYRACUSE Year Built: 1980
Total Spans: 1 Ramp Bridge Attached To Span: NA BIN: NA
General Recommendation: 6 Computed Condition Rating: 5.359

Abutment Ratings:	**Beg Abut**	**End Abut**
Joint with Deck	4	5
Bearings, Bolts, Pads	5	6
Seats and Pedestals	6	6
Backwall	5	5
Stem (Breastwall)	5	5
Erosion or Scour	5	6
Footings	9	9
Piles	8	8
Recommendation	5	5

Wingwall Ratings:	**Beg Abut**	**End Abut**
Walls	5	5
Footings	9	9
Erosion or Scour	6	6
Piles	8	8

Channel Ratings:	**Channel**
Stream Alignment	8
Erosion and Scour	8
Waterway Opening	8
Bank Protection	8

Approach Ratings:	**Approaches**
Drainage	6
Embankment	6
Settlement	5
Erosion	6
Pavement	4
Guide Railing	4

Number of Flags Issued:

RED: 0 Yellow: 0 Safety: 0

Vulnerability Reviews Recommended: 1=Yes, 2=No, 3=NA, X=NotActive

Hydraulic: 3	Overload: X	Steel: 2
Collision: 2	Concrete: X	Seismic: X

Inspector's Signature: CheckValue: 1,799,008,995 Date: 10/25/2012

Peter Riehlman,PE () (Inspector ID:3000052)

Signed copy of this inspection report is available in the appropriate NYSDOT Regional Office

Reviewed By: Date: 12/17/2012

James R. Manning,PE () (QC ID:3000023)

Signed copy of this inspection report is available in the appropriate NYSDOT Regional Office

Inspection Date: 10/25/2012 RC: 33 BIN: 1069110

Span Ratings

Carried: BRIGHTON AVE Crossed: I481RAMPFROMI81SB CheckValue: 1,799,008,995

Deck Element Ratings:	**001**
Wearing Surface	5
Curbs	5
Sidewalks, Fascias	4
Railings, Parapets	5
Scuppers	8
Gratings	8
Median	8
Mono Deck Surface	5

Superstructure Ratings:	**001**
Structural Deck	6
Primary Members	6
Secondary Members	6
Paint	4
Joints	8
Recommendation	6

Pier Ratings:	**001**
Bearings, Bolts, Pads	8
Pedestals	8
Top of Cap or Beam	8
Stem Solid Pier	8
Cap Beam	8
Pier Columns	8
Footings	8
Erosion or Scour	8
Piles	8
Recommendation	8

Utility Ratings:	**001**
Lighting	6
Sign Structure	8
Utilities and Support	6

Field Notes:

Field Date	Arrival	Departure	Temp (C)	Temp (F)	Weather Conditions
10/25/2012	2:00:00 PM	4:00:00 PM		70	

IN-DEPTH CONDITION DOCUMENTATION

IN DEPTH INSPECTION REPORT

BIN 1069110

Visual Inspection

The bridge was constructed in 1980 with its last major rehabilitation in 2004. In 2004, bridge deck joints were replaced and miscellaneous concrete areas on the abutments were repaired under contract D259742.

Cracks, spalls, and other field observations are shown on the plans. Below is a brief summary of conditions for each feature.

Superstructure

Deck – See Bridge Deck Evaluation Report

Steel – See Structural Steel Inspection Summary

Bearings – Bearing elements typically have rust accumulation. The bearings on the begin abutment have debris accumulation around the pedestals and bearing elements.

Substructure

South (Begin) Abutment – The abutment stem contained salt stains and map-cracking. The salt stains were primarily a result of the leaking bridge deck joint above the abutment. The bridge seat and pedestals contained debris from deck joint and backwall spalling and previous deck joint repairs. The abutment stem, backwall and wingwalls contained small isolated spalls.

North (End) Abutment – The abutment stem was primarily wet during the inspection from leaking deck joints and leaking water lines on the bridge. The leaking water lines caused severe ice accumulation on the end cross frames, bridge seat, abutment stem, and fill slopes. Also, the additional runoff has caused undermining of the fill slope pavers resulting in a sink-hole in the abutment fill slope. The abutment stem and backwall contained isolated concrete spalls and cracks. The wingwalls also contained isolated spalls and cracks.

STRUCTURAL STEEL INSPECTION SUMMARY

BIN 1069110

Special Emphasis Inspection Required

Non-Redundant/Fracture Critical Members – No

Pin and Hangers – No

Fatigue-Prone Welds – Yes

Non-Categorized Fatigue-Prone Details – No

Other (Specified in Text) – No

Special Emphasis Details

100% Hands-on inspection performed on welded gusset plates – No cracks found.

Overall Steel Condition

The steel showed no sign of major deterioration. The bottom flanges were rusted with paint delaminated.

Paint

The bridge paint has delaminated from the bottom flanges and other isolated areas of the structure.

Section Loss

Due to the age of the steel, a blanket 5% section loss should be used on the bottom flanges of the exterior girders.

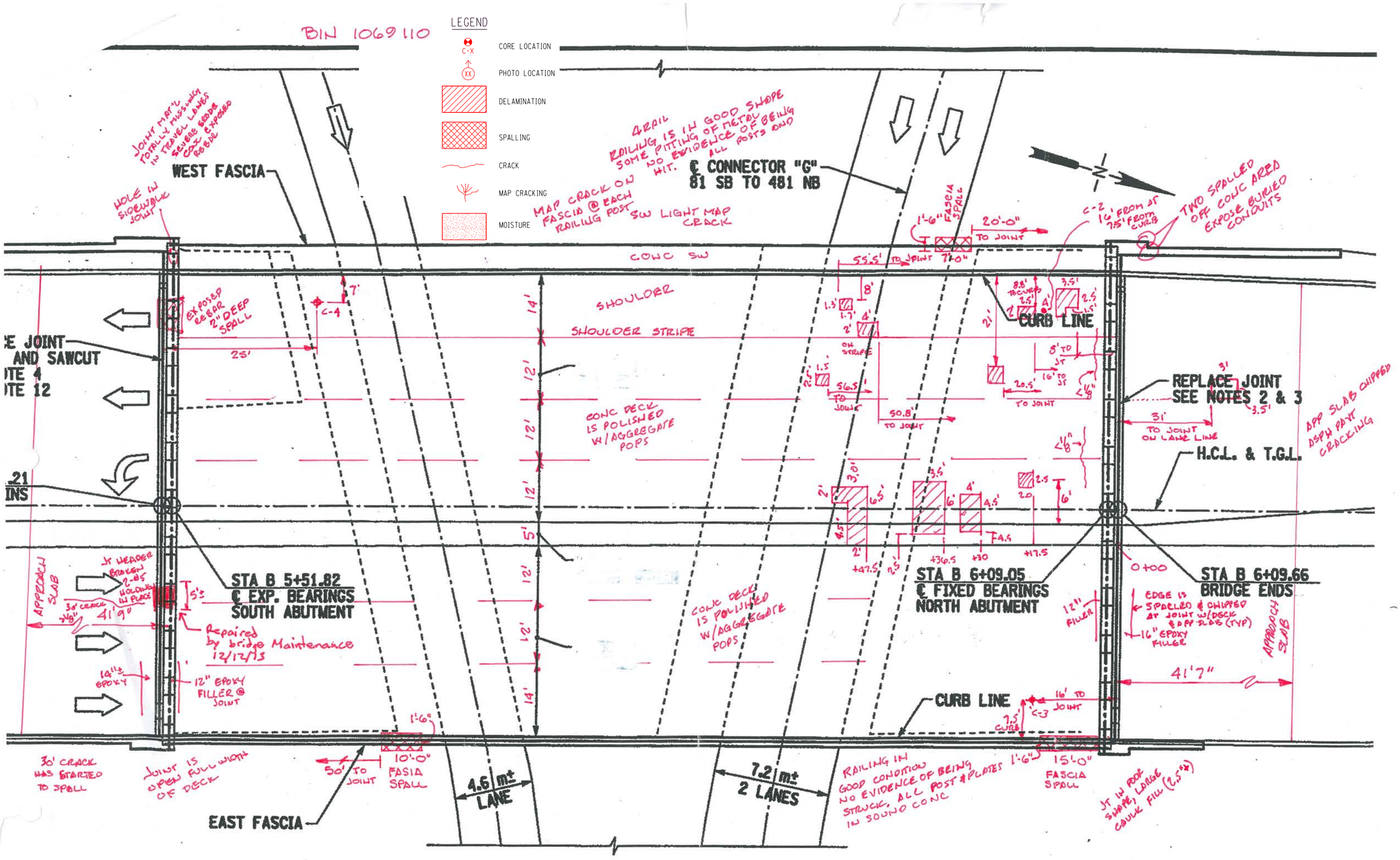
BIN 1069110
LEGEND
CORE LOCATION
PHOTO LOCATION
DELAMINATION
SPALLING
CRACK
MAP CRACKING
MOISTURE
WEST FASCIA
℄ CONNECTOR "G"
81 SB TO 481 NB
CONC SW
SHOULDER
SHOULDER STRIPE
CURB LINE
REPLACE JOINT
SEE NOTES 2 & 3
H.C.L. & T.G.L.
STA B 5+51.82
℄ EXP. BEARINGS
SOUTH ABUTMENT
STA B 6+09.05
℄ FIXED BEARINGS
NORTH ABUTMENT
STA B 6+09.66
BRIDGE ENDS
CURB LINE
EAST FASCIA
4.6 m±
LANE
7.2 m±
2 LANES
APPROACH SLAB
APP SLAB CHIPPED ASPH PAVT CRACKING
TWO SPALLED OFF CONC AREA EXPOSE BURIED CONDUITS
CONC DECK IS POLISHED W/AGGREGATE POPS
Repaired by bridge Maintenance 12/12/13
30' CRACK HAS STARTED TO SPALL
JOINT IS OPEN FULL WIDTH OF DECK
RAILING IN GOOD CONDITION NO EVIDENCE OF BEING STRUCK. ALL POST & PLATES IN SOUND CONC
JT IN POOR SHAPE, LARGE CAULK FILL (2.5"±)
EDGE IS SPALLED & CHIPPED AT JOINT W/DECK & APP SLAB (TYP)
16" EPOXY FILLER
12" EPOXY FILLER @ JOINT
14"± EPOXY
JT HEADER BROKEN 2-#5 HOLDING IN PLACE
30' CRACK
41'9"
41'7"
10'-0" FASIA SPALL
15'-0" FASIA SPALL
50' TO JOINT
20'-0" TO JOINT
55.5' TO JOINT
56.5' TO JOINT
50.8' TO JOINT
20.5' TO JOINT
31' TO JOINT ON LANE LINE
16' TO JOINT
7.5' CURB
12" FILLER
0+00
+47.5
+36.5
+30
+17.5

PLAN

FED ROAD REG. NO.	STATE	CONTRACT NO.	SHEET NO.	TOTAL SHEETS
1	N.Y.	D259742	665	788

INTERSTATE ROUTE 505 ONONDAGA INTERCHANGE
BRIDGE REHABILITATION PROJECT (ELEMENT SPECIFIC)
VARIOUS BRIDGES ON INTERSTATES 81 & 690
CITY OF SYRACUSE
ONONDAGA COUNTY
P.I.N. 3804.66 | B.I.N. 1069110

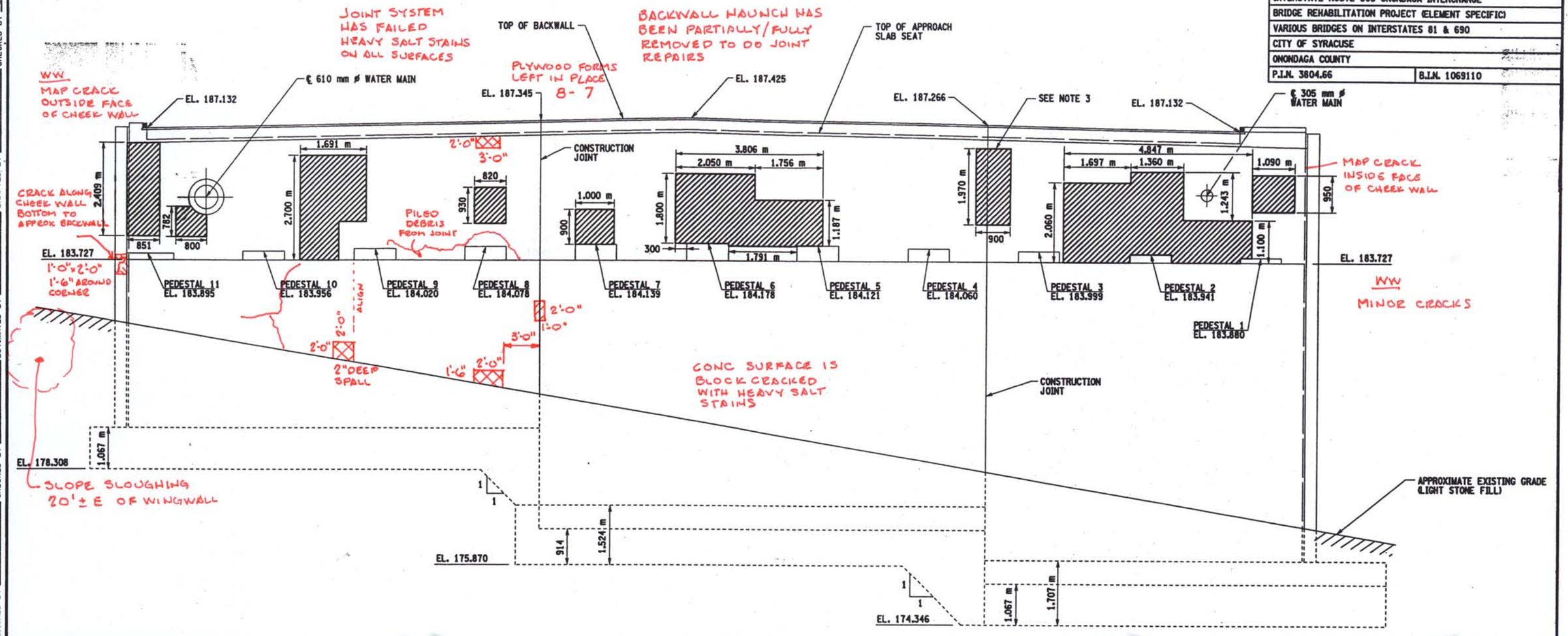

SOUTH ABUTMENT - ELEVATION

0.5 0 1 2 3 m

LEGEND

- CORE LOCATION
- PHOTO LOCATION
- DELAMINATION
- SPALLING
- CRACK
- MAP CRACKING
- MOISTURE

SPECIAL NOTE: ALL DIMENSIONS ARE SHOWN IN MILLIMETERS UNLESS OTHERWISE NOTED

B.I.N. 1069110

AS BUILT REVISIONS

SIGNATURE | DATE

BRIGHTON AVENUE OVER CONNECTORS "F" & "G"

SOUTH ABUTMENT ELEVATION

STATE OF NEW YORK
DEPARTMENT OF TRANSPORTATION

FILENAME	REGION	DATE	DRAWING NO.
380466YB_A1B	3	OCT. 2004	ST25-4

DESIGN SUPERVISOR RON NORTHROP JOB MANAGER RON NORTHROP DESIGNED BY LOWELL LINGO CHECKED BY RON NORTHROP ESTIMATED BY LOWELL LINGO DRAFTED BY RJ LAMPHEAR CHECKED BY LOWELL LINGO

FED ROAD REG. NO.	STATE	CONTRACT NO.	SHEET NO.	TOTAL SHEETS
1	N.Y.	D259742	667	788

INTERSTATE ROUTE 505 ONONDAGA INTERCHANGE
BRIDGE REHABILITATION PROJECT (ELEMENT SPECIFIC)
VARIOUS BRIDGES ON INTERSTATES 81 & 690
CITY OF SYRACUSE
ONONDAGA COUNTY
P.I.N. 3804.66 B.I.N. 1069110

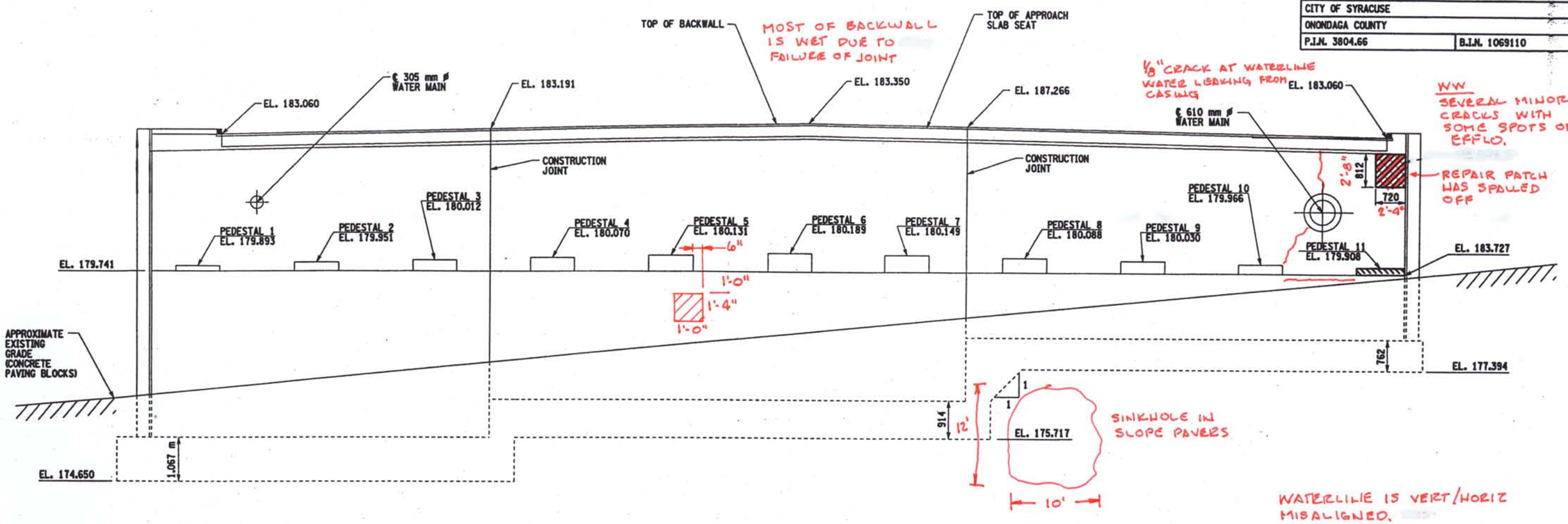

NORTH ABUTMENT - ELEVATION

0.5 0 1 2 3 m

WATERLINE IS VERT/HORIZ MISALIGNED.
PIPE IS RESTING ON ANGLE AT BOTTOM OF DIAPHRAGM.
1/29/14
LEAKING WATERLINE AT EACH END HAVE SIGNIFICANT ICE ACCUMULATIONS ON CONC SURFACES AND AROUND BEARINGS IN NE CORNER.

LEGEND

- C-X — CORE LOCATION
- (XX) — PHOTO LOCATION
- DELAMINATION
- SPALLING
- CRACK
- MAP CRACKING
- MOISTURE

B.I.N. 1069110

SPECIAL NOTE: ALL DIMENSIONS ARE SHOWN IN MILLIMETERS UNLESS OTHERWISE NOTED

AS BUILT REVISIONS

SIGNATURE DATE

BRIGHTON AVENUE
OVER
CONNECTORS "F" & "G"

NORTH ABUTMENT ELEVATION

STATE OF NEW YORK
DEPARTMENT OF TRANSPORTATION

FILENAME	REGION	DATE	DRAWING NO.
380466YB_A1D	3	OCT. 2004	ST25-6

DESIGN SUPERVISOR RON NORTHROP JOB MANAGER RON NORTHROP DESIGNED BY LOWELL LINGO CHECKED BY LOWELL LINGO
DRAFTED BY RJ LAMPHEAR CHECKED BY LOWELL LINGO
ESTIMATED BY LOWELL LINGO CHECKED BY
USER = **USER

1069110

D95042

FED. ROAD REG. NO.	STATE	FEDERAL AID PROJECT NO.	SHEET NO.	TOTAL SHEETS
1	N. Y.	I-IG-481-2(74) I-IG-81-2(128)	345	571

INTERSTATE ROUTE CONNECTION 571
FOREST INTERCHANGE - JAMESVILLE
ONONDAGA COUNTY

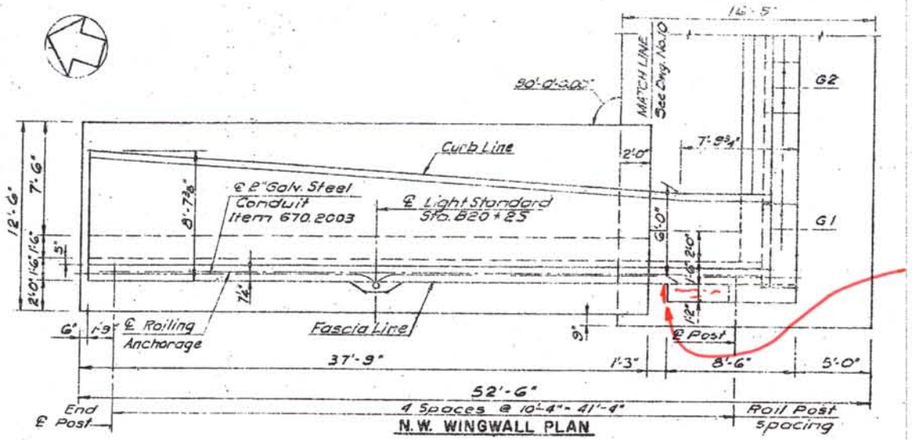

CONC SURFACE HAS SEVERAL SPALLS ½"-1" IN DEPTH SHOWING HEAVY RUST STAINS

℄ 2" Galv. Steel Conduit Item 670.2003

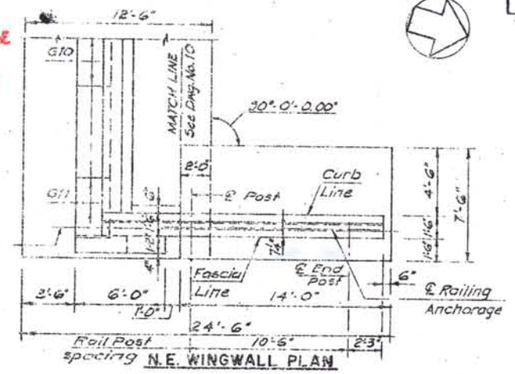

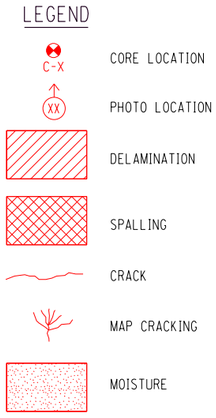

JOINT IS OPEN NEEDS TO BE CLEANED & CAULKED

JOINT EDGES SPALLED

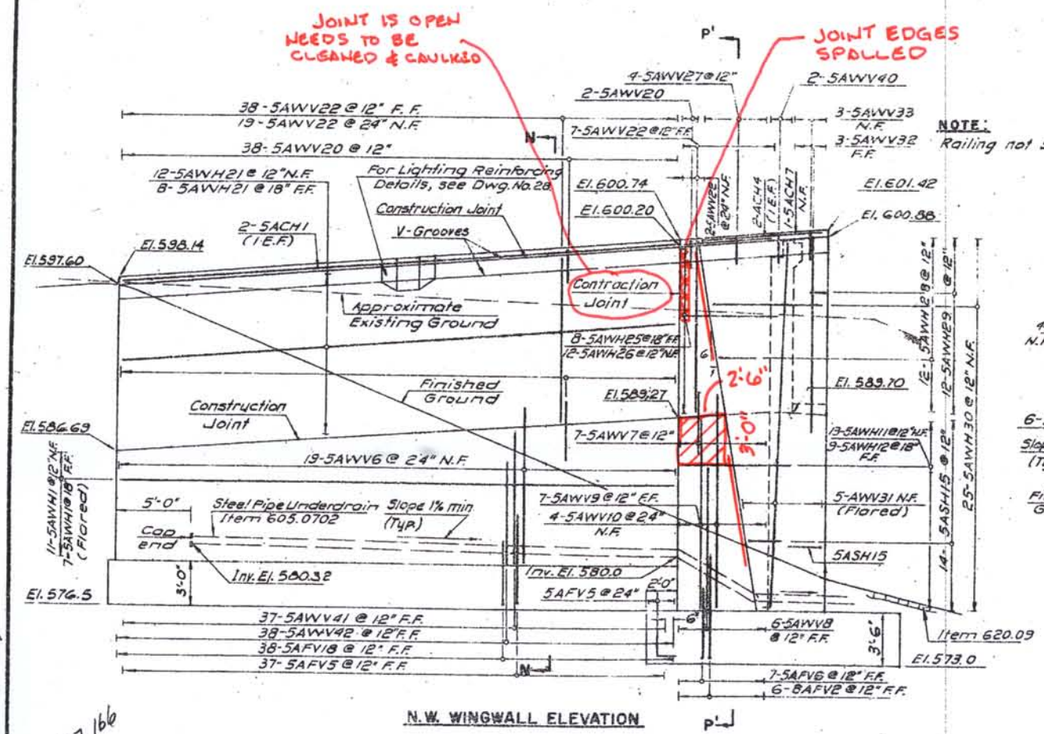

N.W. WINGWALL ELEVATION

NOTE: Railing not shown.

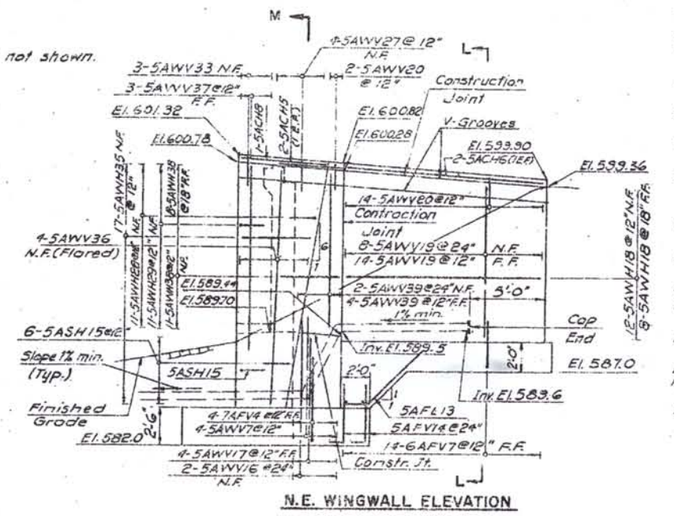

N.E. WINGWALL ELEVATION

MINOR CRACKS
SOME SHOW SPOTS OF EFFLO.

BRIDGE NO. 3
RELOCATED BRIGHTON AVENUE OVER CONNECTORS "F" & "G"
NORTHWEST & NORTHEAST WINGWALLS

Prepared and recommended: D. Steadman
Date 12/4/75
Consulting Engineers

DWG. NO.	SCALE	DATE
11	1/4"=1'-0"	Nov. 1975

ROCKROD & O'DEA, INC. CONSULTING ENGINEERS

In Charge of Design: [illegible]
Designed by: [illegible]
Detailed by: [illegible]
Checked by: [illegible]
Detail Checked by: [illegible]

577.166

345

NORTH ABUTMENT

IN-DEPTH PHOTO DOCUMENTATION

C&S Engineers, Inc.
499 Col. Eileen Collins Blvd.
Syracuse, New York 13212
Phone: (315) 455-2000
Fax: (315) 455-9667
www.cscos.com

Brighton Ave. over I-481 NB - BIN 1069110



DESCRIPTION: BEGIN ABUTMENT – FACING SOUTH

PHOTO 1



DESCRIPTION: BEGIN ABUTMENT – SOUTHEAST WINGWALL (RIGHT) – FACING SOUTHWEST - TYPICAL

PHOTO 2

C&S Engineers, Inc.
499 Col. Eileen Collins Blvd.
Syracuse, New York 13212
Phone: (315) 455-2000
Fax: (315) 455-9667
www.cscos.com

Brighton Ave. over I-481 NB - BIN 1069110



DESCRIPTION: BEGIN ABUTMENT – SOUTHEAST WINGWALL – LOOKING WEST – HORIZONTAL CRACK WITH RUST STAINING AND SALT STAINING

PHOTO 3



DESCRIPTION: BEGIN ABUTMENT – NEAR PEDESTAL 11 – SPALL AT BASE OF CHEEK WALL WITH CRACK EXTENDING TO FACE OF WINGWALL

PHOTO 4

C&S Engineers, Inc.
499 Col. Eileen Collins Blvd.
Syracuse, New York 13212
Phone: (315) 455-2000
Fax: (315) 455-9667
www.cscos.com

Brighton Ave. over I-481 NB - BIN 1069110



DESCRIPTION: BEGIN ABUTMENT – PEDESTAL 11 - LOOKING SOUTH – DEBRIS ON PEDESTAL BASE PLATE – TYPICAL ON PEDESTALS 8 - 11

PHOTO 5



DESCRIPTION: BEGIN ABUTMENT – PEDESTAL 5 – LOOKING SOUTH – SALT ACCUMULATION ON BEARING – TYPICAL BRGS. 1-6 & 9-11

PHOTO 6

C&S Engineers, Inc.
499 Col. Eileen Collins Blvd.
Syracuse, New York 13212
Phone: (315) 455-2000
Fax: (315) 455-9667
www.cscos.com

Brighton Ave. over I-481 NB - BIN 1069110



DESCRIPTION: BEGIN ABUTMENT– LEFT CHEEKWALL NEAR PEDESTAL 1 – LOOKING SOUTHWEST – SPALL WITH RUST STAINING AND MAP-CRACKING

PHOTO 7



DESCRIPTION: BEGIN ABUTMENT – BETWEEN PEDESTALS 4 AND 5 – DECK JOINT SPALLED AND LEAKING – TYPICAL ALL BAYS

PHOTO 8

C&S Engineers, Inc.
499 Col. Eileen Collins Blvd.
Syracuse, New York 13212
Phone: (315) 455-2000
Fax: (315) 455-9667
www.cscos.com

Brighton Ave. over I-481 NB - BIN 1069110



DESCRIPTION: BAY 2 – TYPICAL CROSSFRAME – TYPICAL PAINT DELAMINATION WITH BOTTOM FLANGE RUST

PHOTO 9



DESCRIPTION: BAY 2 – ISOLATED WET STAIN UNDER DECK – TYPICAL BAYS 2, 3, 4, 5 & 9

PHOTO 10

C&S Engineers, Inc.
499 Col. Eileen Collins Blvd.
Syracuse, New York 13212
Phone: (315) 455-2000
Fax: (315) 455-9667
www.cscos.com

Brighton Ave. over I-481 NB - BIN 1069110



DESCRIPTION: END ABUTMENT – PEDESTAL 10 – CRACK IN BACKWALL – TYPICAL BEARING

PHOTO 11



DESCRIPTION: END ABUTMENT – BAY 10 – ICE ACCUMULATION FROM LEAKING WATERLINE

PHOTO 12

C&S Engineers, Inc.
499 Col. Eileen Collins Blvd.
Syracuse, New York 13212
Phone: (315) 455-2000
Fax: (315) 455-9667
www.cscos.com

Brighton Ave. over I-481 NB - BIN 1069110



DESCRIPTION: END ABUTMENT – UNDER PEDESTAL 1 – MOISTURE FROM LEAKING WATER LINE – CAUSES ICE SIMILAR TO PHOTO 12.

PHOTO 13



DESCRIPTION: END ABUTMENT – BACKWALL – PEDESTAL 11 – DECK JOINT SPALL

PHOTO 14

C&S Engineers, Inc.
499 Col. Eileen Collins Blvd.
Syracuse, New York 13212
Phone: (315) 455-2000
Fax: (315) 455-9667
www.cscos.com

Brighton Ave. over I-481 NB - BIN 1069110



DESCRIPTION: END ABUTMENT – LEFT WINGWALL – RUST STAINING WITH ISOLATED CONCRETE DELAMINATION AND SPALLED CONCRETE

PHOTO 15



DESCRIPTION: END ABUTMENT – TYPICAL ELEVATION VIEW – CONCRETE IS WET FROM LEAKING DECK JOINT

PHOTO 16

C&S Engineers, Inc.
499 Col. Eileen Collins Blvd.
Syracuse, New York 13212
Phone: (315) 455-2000
Fax: (315) 455-9667
www.cscos.com

Brighton Ave. over I-481 NB - BIN 1069110



DESCRIPTION: END ABUTMENT – FILL SLOPE UNDERMINED FROM ABUTMENT DRAIN

PHOTO 17

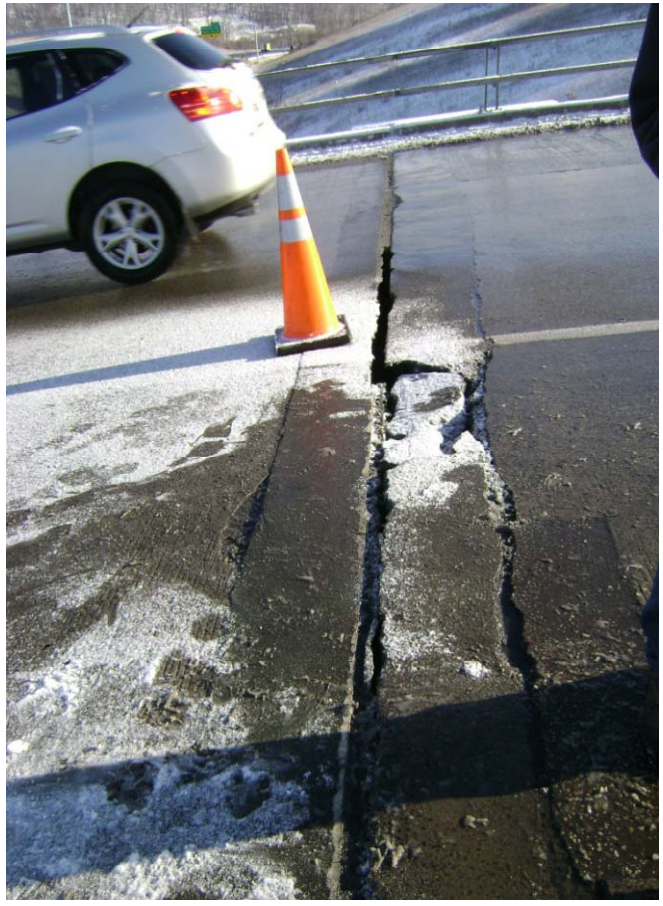

DESCRIPTION: BEGIN DECK JOINT – LOOKING EAST – JOINT HEADER CRACKED AND UNSUPPORTED – AREA REPAIRED BY MAINTENANCE DURING INSPECTION

PHOTO 18

C&S Engineers, Inc.
499 Col. Eileen Collins Blvd.
Syracuse, New York 13212
Phone: (315) 455-2000
Fax: (315) 455-9667
www.cscos.com

Brighton Ave. over I-481 NB - BIN 1069110



DESCRIPTION: BEGIN APPROACH SLAB – LOOKING EAST – APPROACH ASPHALT CRACKED

PHOTO 19



DESCRIPTION: BRIDGE DECK – ISOLATED AREAS OF MISSING AGGREGATE IN WEARING SURFACE

PHOTO 20

C&S Engineers, Inc.
499 Col. Eileen Collins Blvd.
Syracuse, New York 13212
Phone: (315) 455-2000
Fax: (315) 455-9667
www.cscos.com

Brighton Ave. over I-481 NB - BIN 1069110



DESCRIPTION: END APPROACH SLAB – CHEEKWALL COVER SLAB SPALLED WITH EXPOSED REBAR.

PHOTO 21



DESCRIPTION: BRIDGE DECK

PHOTO 22

C&S Engineers, Inc.
499 Col. Eileen Collins Blvd.
Syracuse, New York 13212
Phone: (315) 455-2000
Fax: (315) 455-9667
www.cscos.com

Brighton Ave. over I-481 NB - BIN 1069110



DESCRIPTION: BRIDGE ELEVATION

PHOTO 23

DESCRIPTION:

PHOTO

BIN 1069110
PHOTO LOCATION MAP

WEST FASCIA

℄ CONNECTOR "F"
81 NB TO 481 NB

℄ CONNECTOR "G"
81 SB TO 481 NB

REPLACE JOINT
FILLER AND SAWCUT
SEE NOTE 4
SEE NOTE 12

STA B 5+51.21
BRIDGE BEGINS

STA B 5+51.82
℄ EXP. BEARINGS
SOUTH ABUTMENT

13.40 m
3 LANES

1.20 m
FLUSH MEDIAN

11.58 m
2 LANES

CURB LINE

REPLACE JOINT
SEE NOTES 2 & 3

H.C.L. & T.G.L.

STA B 6+09.05
℄ FIXED BEARINGS
NORTH ABUTMENT

STA B 6+09.66
BRIDGE ENDS

CURB LINE

4.6 m±
LANE

7.2 m±
2 LANES

EAST FASCIA

PLAN

2 0 5 10 m

℄ EXP. BEARINGS
SOUTH ABUTMENT

57.22 m
ALONG STATION LINE

℄ FIX. BEARINGS
NORTH ABUTMENT

REPLACE LIGHT STANDARD.
SEE DWG. CD-16 FOR DETAILS.

EXISTING STEEL
BRIDGE RAILING

EXP.

ASBESTOS DOCUMENTATION

ASBESTOS DOCUMENTATION FROM WATTS ARCHITECTURE & ENGINEERING, INC.

(WILL REPLACE BIN FOLDER ASBESTOS REPORT UPON COMPLETION)

ATHENICA
ENVIRONMENTAL SERVICES INC.
Tel (718) 784-7490
Fax (718) 784-4085

BULK (NOB) ASBESTOS ANALYSIS BY POLARIZED LIGHT MICROSCOPY AND TRANSMISSION ELECTRON MICROSCOPY

CLIENT: NYS DOT, Region 3
LABORATORY ID #: 04-07-163
DATES OF ANALYSIS: 07/23/04

PROJECT: Bin: # 1069110
ANALYT. METHODOLOGIES: ELAP 198.1, ELAP 198.4
DATE OF REPORT: 07/23/04

LABORATORY RESULTS

CLIENT #	LAB. ID #	LOCATION	%ORG	%ASI	%All	PLM RESULTS	TYPE OF ASBEST.	TEM RESULTS	TYPE OF ASBEST.	POSIT. / NEGAT.
01	04-07-163-01	Steel paint coat G-9 bottom flange 3m from end bearing	35.63	17.66	46.71	**ND**	NA	**ND**	NA	**Negat.**
02	04-07-163-02	Steel paint coat G-10 at end bearing	22.37	10.00	67.63	**ND**	NA	**ND**	NA	**Negat.**
03	04-07-163-03	Steel paint coat G-11 bottom flange 1m form end bearing	29.25	7.82	62.93	**ND**	NA	**ND**	NA	**Negat.**

ANALYST
E. Dimitrakas

LABORATORY DIRECTOR
Spiro Dongaris

LABORATORY CERTIFICATION NUMBERS: NVLAP 101958, ELAP 10955

- Athenica Environmental Services Inc. (AES), is responsible only for information pertaining to samples taken by its employees.
- Samples will be stored for sixty (60) days. AES Inc., should be notified within this time frame for a true duplicate analysis.
- The report relates only to items tested. This report must not be used to claim product endorsement by NVLAP or any other agency of the U.S. Government. Test reports may not be reproduced except in full and with prior approval of AES Inc.
- The liability of Athenica Environmental Services Inc. with respect to the services charged, shall in no event exceed the amount of the invoice.

ATHENICA
ENVIRONMENTAL SERVICES INC.
45-09 GREENPOINT AVENUE
LONG ISLAND CITY, NY 11104
Tel. (718) 784-7490
Fax. (718) 784-4085

PROJECT NO. (ATHENICA FILE#) C003314 DATE 7/31 2004

METHOD OF SHIPMENT U.S. MAIL INSPECTOR K. WAY

NUMBER OF SAMPLES 3 TYPE OF ANALYSIS REQUESTED ☐ PLM ☒ NOB-PLM ☒ NOB-TEM ☐ OTHERS

TURNAROUND TIME ☐ 6 HRS ☐ 12 HRS ☐ 24 HRS ☒ OTHER HRS

COMMENTS ATT: CHRISTOPHER ANDERSON
333 E. WASHINGTON ST. SYRACUSE, N.Y. 13202

HOM. AREA	SAMLPLE #	SAMPLE DESCRIPTION	SAMPLE LOCATION	FIELD COMMENTS	LABORATORY RESULTS		
					PLM	PLM-NOB	TEM-NC
	01	STEEL PAINT COAT	G-9 BOTTOM FLANGE	3METERS FROM END BEARING			
	02	"	G-10 AT END BEARING				
	03	"	G-11 BOTTOM FLANGE	1METER FROM END BEARING			

TRANSMITTAL OF RESULTS :
☒ STANDARD
☐ TELEPHONE RESULTS TO
☐ FAX RESULTS TO

TELEPHONE # : (315) 428-4628
FAX # :

BATCH # : 04-07-16.3

CHAIN OF CUSTODY RECORD

RELINQUISHED BY :	Kurt Way	DATE :	7/13/2004	TIME :	10:00 AM
RECEIVED BY :	E. Zimmerman	DATE :	7/19/2004	TIME :	
ANALYST :	E. Zimmerman	DATE :	7/23/2004	TIME :	

LABORATORY ACCREDITATION :
NVLAP# 101958 ELAP# 10955

NEW YORK STATE
DEPARTMENT OF TRANSPORTATION
D031085 P.I.N 3501.60

LEVEL 1 LOAD RATING
B.I.N. 1069110
Brighton Avenue over
I-481 Ramps from I-81

LOAD RATING SUMMARY TABLE (LOAD FACTOR)					
CONTROLLING MEMBER	**CONTROLLING PARAMETER**	**LIVE LOAD**	**LIVE LOAD TYPE**	**INVENTORY RATING**	**OPERATING RATING**
(G2) INTERIOR GIRDER	DESIGN FLEXURE	HS20-44	LANE + PEDESTRIAN	HS 38.2 (68.7 TONS)	HS 63.8 (114.8TONS)

DOES NOT INCLUDE FUTURE WEARING COURSE

ANALYSIS METHOD:LOAD FACTOR

RECOMMENDED POSTING AS-IS CONDITION: _____ Tons __X__ None

CALCULATED BY:



DATE: 5-12-2014

QUALITY ASSURANCE BY:



DATE: 5-28-2014

C&S COMPANIES®

499 Col. Eileen Collins Blvd.
Syracuse, NY 13212
phone 315-455-2000
fax 315-455-9667
www.cscos.com

ENGINEERS
DESIGN BUILD
TECHNICAL RESOURCES
OPERATIONS

C&S Companies

C&S Engineers, Inc.
Syracuse Hancock International Airport
Syracuse, NY 13212
phone 315-455-2000
fax 315-455-9667
www.cscos.com

TECHNICAL MEMORANDUM

TO: FILE (190.514.001)

FROM: JESSICA S. BAUER, P.E.
NYSPE 084915

DATE: FEBRUARY 16, 2014

C&S PROJECT NO.: 190.514.001

RE: SEISMIC ASSESSMENT SUMMARY
NEW YORK STATE DEPARTMENT OF TRANSPORTATION
D031085; PIN 3501.60; I-81

BIN: 1069110 Seismic Assessment

This memorandum summarizes the seismic assessment conducted for BIN 1069110 as part of the Interstate 81 Project in Syracuse, NY. The purpose of the assessment is to determine if seismic retrofits are warranted at the superstructure to substructure connection, and if further seismic evaluation of the structure is required. This memorandum will give the assessment results, retrofits required and recommendations for further seismic evaluation of the structure.

ASSESSMENT PROCEDURE

The seismic assessment was performed in accordance with the FHWA Seismic Retrofitting Manual for Highway Structures: Part 1 - Bridges, January 2006. As per the referenced manual, seismic assessment was performed for both lower level and upper level earthquake ground motion. The lower level earthquake ground motion has a reasonable likelihood of occurrence within the life of the bridge (50% probability of exceedance within a 75 year bridge life). The upper level earthquake ground motion has a finite likelihood of occurrence within the life of the bridge (7% probability of exceedance within a 75 year bridge life).

Values for the spectral acceleration for the Syracuse area used in the assessment are as follows:

- Lower Level Earthquake Ground Motion for a Short Period (0.2 seconds): $S_S = 0.0251$
- Lower Level Earthquake Ground Motion for a Long Period (1.0 seconds): $S_1 = 0.0076$
- Upper Level Earthquake Ground Motion for a Short Period (0.2 seconds): $S_S = 0.139$
- Upper Level Earthquake Ground Motion for a Long Period (1.0 seconds): $S_1 = 0.047$

These values are considered constant and are the same for all seismic assessments of bridges in the Syracuse area.

The Site Class is based on the soil conditions at the bridge location. It was determined that this parameter has little effect on the results of the seismic assessment because the spectral

You created this PDF from an application that is not licensed to print to novaPDF printer (http://www.novapdf.com)

acceleration values for the Syracuse area are small. Based on this, a site class of D was used for all seismic assessments of bridges in the Syracuse area.

Bridge parameters used in the seismic assessment were retrieved from the record drawings and WinBolts data.

The seismic assessment takes into account the anticipated service life, importance, and the seismic exposure of the bridge to determine a seismic retrofit category (SRC). The SRC is then used to determine seismic evaluation methods and retrofit measures. There are four SRCs, A through D. Seismic retrofit category A is the lowest category; bridges in this category do not require retrofits or further seismic evaluation. Seismic retrofit category D is the highest category; bridges in this category requiring the most rigorous seismic evaluations and retrofits.

ASSESSMENT RESULTS
The SRC for the bridge is "**C**" for lower level earthquake ground motion and "**B**" for upper level earthquake ground motion.

RETROFITS REQUIRED
Bearing replacements and seat width improvements are not required at the abutments. Additional retrofits may be required if further seismic evaluation is needed.

RECOMMENDATIONS FOR FURTHER SEISMIC EVALUATION
For the lower level earthquake ground motion, it is recommended that capacity/demand ratios for bridge components are calculated as per Section 5.4 of the referenced manual. For the upper level earthquake ground motion, it is recommended that the capacities of the bearings are checked as per Section 5.2 of the referenced manual.

Retrofit cost estimates will be provided after any further required seismic evaluations are completed.

You created this PDF from an application that is not licensed to print to novaPDF printer (http://www.novapdf.com)

ENGINEERS
DESIGN BUILD
TECHNICAL RESOURCES
OPERATIONS

C&S Engineers, Inc.
Syracuse Hancock International Airport
Syracuse, NY 13212
phone 315-455-2000
fax 315-455-9667
www.cscos.com

TECHNICAL MEMORANDUM

TO: **FILE (190.514.001)**

FROM: **PAUL BYRNE, P.E.**
NYSPE 055928

DATE: **JUNE 11, 2014**

C&S PROJECT NO.: 190.514.001

RE: **NEW YORK STATE DEPARTMENT OF TRANSPORTATION**
D031085; PIN 3501.60; I-81 Opportunities, BIN 1069110 Fatigue Evaluation

---

This memorandum documents a fatigue evaluation conducted for the existing Interstate 81 Viaduct Project. Existing structures with AASHTO Category D, E, and E' fatigue-prone details require 100% hands-on inspection unless proven to be exempt. The purpose of the evaluation is to assess the remaining life of fatigue-prone components.

EVALUATION PROCEDURES

The fatigue evaluation was performed in accordance with the AASHTO Guide Specification for Fatigue Evaluations of Existing Steel Bridges, 1990. Fatigue-prone welds identified in the biennial inspection reports were located on record drawings and confirmed visually in the field. Additional information concerning fatigue-prone welds located in BIN folders was also obtained and reviewed prior to inspection.

EVALUATION RESULTS

The results of the fatigue evaluation of the existing bridge are shown below. The remaining safe fatigue life of the fatigue components have **not been exhausted**.

Fatigue Detail Location	Remaining Safe Fatigue Life (Years)	Remaining Mean Fatigue Life (Years)
Exterior Girder, G1 Gusset Plate at Bottom Flange	733.98	3712.74
Exterior Girder, G11 Gusset Plate at Bottom Flange	805.08	4062.56
Interior Girder, G2 Gusset Plate at Bottom Flange	713.29	3610.89
Interior Girder, G10 Gusset Plate at Bottom Flange	801.59	4045.42

E. Recommendations:

The purpose of this deck evaluation is to document and determine existing conditions of the deck. It will be used as a tool for developing the scope of work and cost estimates for the development and comparison of alternatives for the overall project.

The total delaminated area is less than 1% of the total deck area. Due to the age, condition and high chloride-ion content of the bridge deck concrete, the bridge deck should be rehabilitated or replaced to meet current standards and to mitigate excessive future maintenance costs.

Option 1 – Scarify and Bridge Deck Overlay
The maximum service life this option would provide is 25 years. The design life of this project is 30 years (ETC +30). This option does not meet the project objectives of obtaining 30+ years of service life.

Option 2 – Bridge Deck Rehabilitation with 100% Deep Removal
This option will involve partial depth reconstruction with top mat rebar exposure of the entire bridge deck to remove the chloride contaminated concrete (100% deep removal). The existing bridge deck thickness is 9 ¼" with 3 ¼" of concrete cover over the top mat of reinforcing. The proposed partial depth reconstruction will include the addition of ¼" of concrete to provide the standard 9 ½" bridge deck thickness. The existing top mat of reinforcing bars will be removed and replaced to accommodate the standard 3" of concrete cover. The existing 2-rail bridge railing and curb will be removed and replaced with new single-slope concrete bridge barrier. The sidewalk and granite curb will be removed and will be replaced with new curb, sidewalk and vertical-faced concrete barrier with pedestrian fencing attached to the top of the barrier. The existing approach slabs will receive the same repair treatment as the deck. The existing deteriorated bridge joints will be replaced with armorless bridge joints. The Level 1 Load

Rating for the final condition was found to be acceptable. This option would provide a service life of 35 years to the bridge deck. The construction cost of this option is $1.50 million.

Option 3 – Bridge Deck Replacement with Cast-In-Place Concrete

This option will involve the complete demolition of the existing bridge deck, sidewalk and curb, 2-rail and 4-rail bridge rail, bridge deck joints and approach slabs. The bridge deck will be replaced with a new concrete deck, new curb, sidewalk, single-slope concrete barrier, vertical-faced concrete barrier with pedestrian fencing attached to the top of the barrier and new armorless bridge joints. The approach slabs will also be replaced under this option. The new bridge deck would be 9 ½" standard thickness as compared to the 9 ¼" existing thickness. The Level 1 Load Rating for the final condition was found to be acceptable. This option would provide a service life of 40 years to the bridge deck. The construction cost of this option is $2.07 million.

Option 4 – Bridge Deck Replacement with Pre-cast Concrete Deck Panels

This option will have the highest construction cost of all of the options however; traffic control costs may be lower due to reduced construction time. Comparison of accelerated construction to conventional construction is beyond the scope of work for this project at this time.

IN-DEPTH INSPECTION REPORT

D031085 P.I.N. 3501.60

B.I.N. 1069120

TEAM LEADER Andrew J. Fuller, P.E. 59848
NYSPE LICENSE #

ASSISTANT TEAM LEADER Jeffrey M. Reina, P.E.
ASSISTANT TEAM LEADER Logan Bessel
ASSISTANT TEAM LEADER Jerome Getter

FEATURE CARRIED Brighton Avenue
FEATURE CROSSED I – 481 Southbound

DATE FIELD WORK BEGAN December 12, 2013
DATE FIELD WORK COMPLETED January 30, 2014

TABLE OF CONTENTS

- TP 349 & 350
- IN-DEPTH CONDITION DOCUMENTATION
- IN-DEPTH PHOTO DOCUMENTATION
- ASBESTOS REPORT

TP 349 & TP 350

BRIDGE ELEMENT RATINGS

Inspection Date: 10/25/2012 RC: 33 BIN: 1069120

Bridge Ratings

Carried: BRIGHTON AVE Crossed: I481RAMPTO81NB CheckValue: 1,799,168,500

Inspection Agency: 10 - NYSDOT Type of Inspection: 1 - BIENNIAL
GTMS: 302 -- Steel - Stringer/Multi-Beam or Girder
POSTINGS: See Gen Rec Page 1 for Postings at time of inspection.
Further Investigation Needed: No
State Highway Number: 000000 Milepoint: 0.4 AADT/Yr: 16975 / 1998
Orientation: 1 - North Political Unit: 2055 - City of SYRACUSE Year Built: 1980
Total Spans: 1 Ramp Bridge Attached To Span: NA BIN: NA
General Recommendation: 6 Computed Condition Rating: 4.891

Abutment Ratings:	Beg Abut	End Abut
Joint with Deck	5	5
Bearings, Bolts, Pads	5	5
Seats and Pedestals	5	6
Backwall	5	4
Stem (Breastwall)	5	5
Erosion or Scour	6	6
Footings	9	9
Piles	8	8
Recommendation	5	5

Wingwall Ratings:	Beg Abut	End Abut
Walls	5	5
Footings	9	9
Erosion or Scour	6	6
Piles	8	8

Channel Ratings:	Channel
Stream Alignment	8
Erosion and Scour	8
Waterway Opening	8
Bank Protection	8

Approach Ratings:	Approaches
Drainage	5
Embankment	6
Settlement	5
Erosion	6
Pavement	5
Guide Railing	5

Number of Flags Issued:

RED: 0 Yellow: 0 Safety: 0

Vulnerability Reviews Recommended: 1=Yes, 2=No, 3=NA, X=NotActive

Hydraulic: 3	Overload: X	Steel: 2
Collision: 2	Concrete: X	Seismic: X

Inspector's Signature: CheckValue: 1,799,168,500 Date: 10/25/2012

Peter Riehlman,PE () (Inspector ID:3000052)

Signed copy of this inspection report is available in the appropriate NYSDOT Regional Office

Reviewed By: Date: 11/28/2012

James R. Manning,PE () (QC ID:3000023)

Signed copy of this inspection report is available in the appropriate NYSDOT Regional Office

Inspection Date: 10/25/2012 RC: 33 BIN: 1069120

Span Ratings

Carried: BRIGHTON AVE Crossed: I481RAMPTO81NB CheckValue: 1,799,168,500

Deck Element Ratings:	**001**
Wearing Surface	4
Curbs	4
Sidewalks, Fascias	3
Railings, Parapets	5
Scuppers	8
Gratings	8
Median	8
Mono Deck Surface	4

Superstructure Ratings:	**001**
Structural Deck	4
Primary Members	6
Secondary Members	6
Paint	4
Joints	8
Recommendation	6

Pier Ratings:	**001**
Bearings, Bolts, Pads	8
Pedestals	8
Top of Cap or Beam	8
Stem Solid Pier	8
Cap Beam	8
Pier Columns	8
Footings	8
Erosion or Scour	8
Piles	8
Recommendation	8

Utility Ratings:	**001**
Lighting	5
Sign Structure	8
Utilities and Support	5

Field Notes:

Field Date	Arrival	Departure	Temp (C)	Temp (F)	Weather Conditions
10/24/2012	2:00:00 PM	4:00:00 PM		60	cldy
10/25/2012	12:30:00 PM	2:00:00 PM		70	sunny

IN-DEPTH CONDITION DOCUMENTATION

IN DEPTH INSPECTION REPORT

BIN 1069120

Visual Inspection

The bridge was constructed in 1980 with its last major rehabilitation in 2004. In 2004, bridge deck joints were replaced and miscellaneous concrete areas on the abutments were repaired under contract D259742.

Cracks, spalls, and other field observations are shown on the plans. Below is a brief summary of conditions for each feature.

Superstructure

Deck – See Bridge Deck Evaluation Report

Steel – See Structural Steel Inspection Summary

Bearings – Bearing elements typically contained isolated areas of delaminated paint and minor rust.

Substructure

Begin Abutment – The abutment stem contained salt stains and map-cracking. The salt stains were primarily a result of the leaking bridge deck joint above the abutment. The leaking water lines caused some ice build-up on the bridge seat and abutment stem. The bridge seat and pedestals contained debris from deck joint and backwall spalling and previous deck joint repairs. The abutment stem, backwall and wingwalls contained isolated spalls.

End Abutment – The abutment stem was primarily wet during the inspection from leaking water lines on the bridge. The backwall contained isolated concrete spalls and cracks.

STRUCTURAL STEEL INSPECTION SUMMARY

BIN 1069110

Special Emphasis Inspection Required

Non-Redundant/Fracture Critical Members – No

Pin and Hangers – No

Fatigue-Prone Welds – Yes

Non-Categorized Fatigue-Prone Details – No

Other (Specified in Text) – No

Special Emphasis Details

100% Hands-on inspection performed of welded gusset plates – No cracks found. However, pack rust was discovered under a welded gusset plate resulting in deformation of the plate. At the time of inspection, there were no cracked welds on the deformed gusset plate.

Overall Steel Condition

The steel showed no sign of major deterioration. The bottom flanges of girders were rusted with paint delaminated. End cross frames showed signs of significant paint deterioration.

Paint

The bridge paint has delaminated from the bottom flanges and other isolated areas of the structure.

Section Loss

Due to the age of the steel, a blanket 5% section loss should be used on the bottom flanges of the girders.

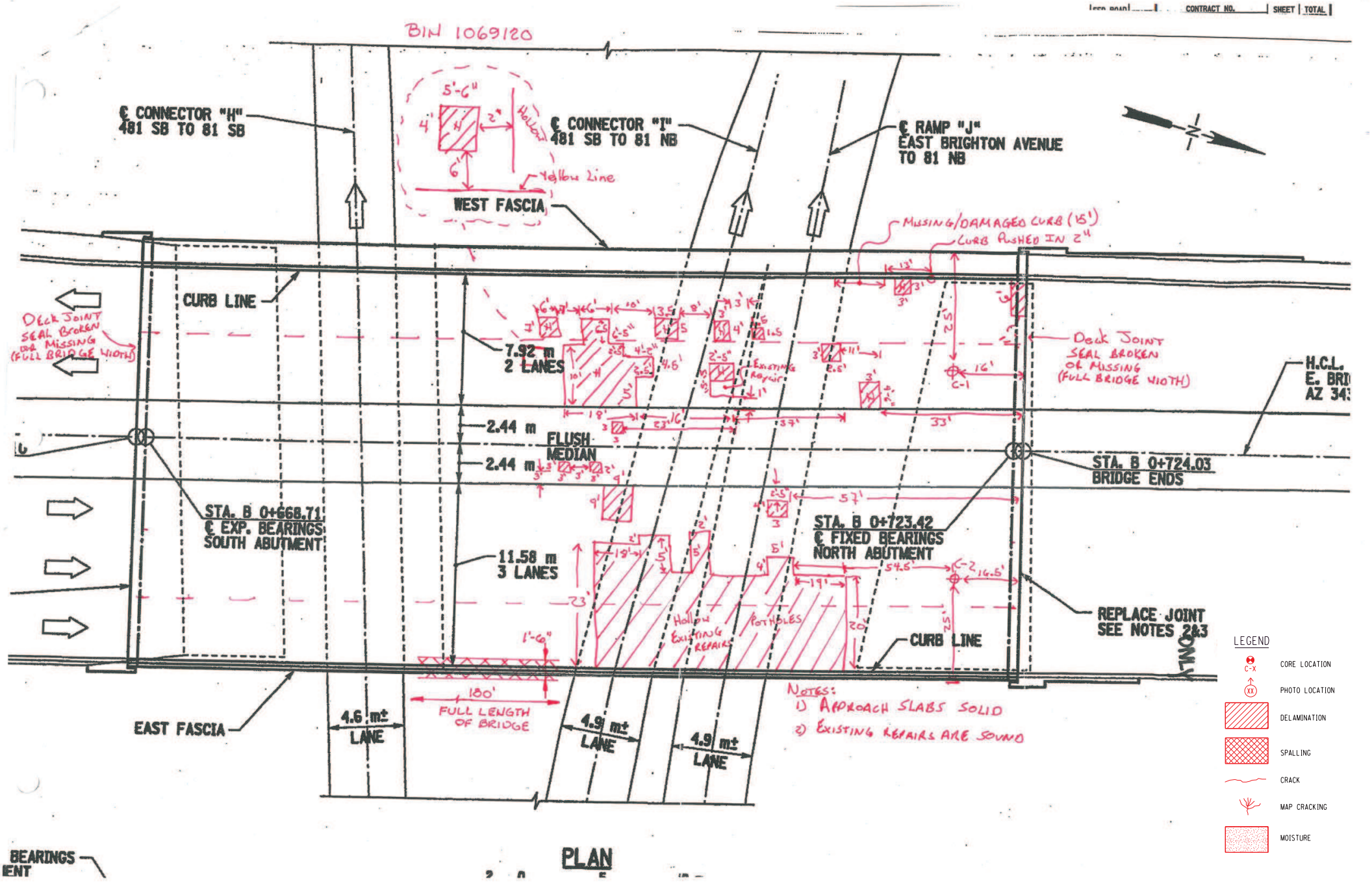
BIN 1069120
℄ CONNECTOR "H"
481 SB TO 81 SB
℄ CONNECTOR "I"
481 SB TO 81 NB
℄ RAMP "J"
EAST BRIGHTON AVENUE
TO 81 NB
5'-6"
4'
2"
Hollow
6'
Yellow Line
WEST FASCIA
MISSING/DAMAGED CURB (15')
CURB PUSHED IN 2"
CURB LINE
DECK JOINT
SEAL BROKEN
OR MISSING
(FULL BRIDGE WIDTH)
7.92 m
2 LANES
2.44 m
FLUSH
MEDIAN
2.44 m
Deck Joint
SEAL BROKEN
OR MISSING
(FULL BRIDGE WIDTH)
H.C.L.
E. BRI
AZ 34
STA. B 0+724.03
BRIDGE ENDS
STA. B 0+668.71
℄ EXP. BEARINGS
SOUTH ABUTMENT
11.58 m
3 LANES
STA. B 0+723.42
℄ FIXED BEARINGS
NORTH ABUTMENT
REPLACE JOINT
SEE NOTES 2&3
CURB LINE
Hollow
Existing
Repairs
Potholes
1'-6"
180'
FULL LENGTH
OF BRIDGE
EAST FASCIA
4.6 m±
LANE
4.9 m±
LANE
4.9 m±
LANE
NOTES:
1) APPROACH SLABS SOLID
2) EXISTING REPAIRS ARE SOUND
LEGEND
CORE LOCATION
PHOTO LOCATION
DELAMINATION
SPALLING
CRACK
MAP CRACKING
MOISTURE
BEARINGS
ENT
PLAN

FED ROAD REG. NO.	STATE	CONTRACT NO.	SHEET NO.	TOTAL SHEETS
1	N.Y.	D259742	673	788

INTERSTATE ROUTE 505 ONONDAGA INTERCHANGE
BRIDGE REHABILITATION PROJECT (ELEMENT SPECIFIC)
VARIOUS BRIDGES ON INTERSTATES 81 & 690
CITY OF SYRACUSE
ONONDAGA COUNTY
P.I.N. 3804.66 B.I.N. 1069120

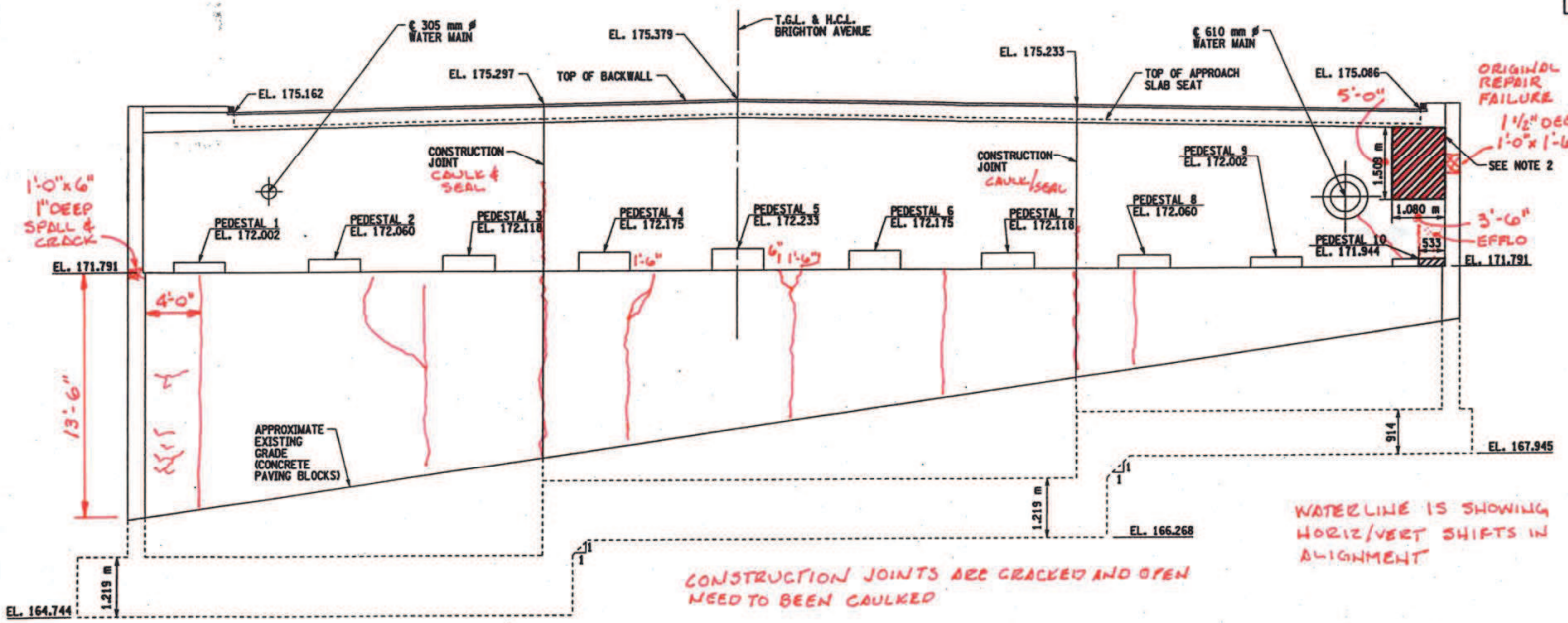

LEGEND
- CORE LOCATION (C-X)
- PHOTO LOCATION (XX)
- DELAMINATION
- SPALLING
- CRACK
- MAP CRACKING
- MOISTURE

NORTH
SOUTH ABUTMENT - ELEVATION

NOTES:
1. SEE ST26-4 FOR ADDITIONAL NOTES.
2. THE CONTRACTOR SHALL REMOVE AND REINSTALL THE END DIAPHRAGM FOR ACCESS TO THIS REPAIR AREA LOCATED ON THE BACKWALL. TO BE PAID UNDER 10564.11 M.

0.5 0 1 2 3 m

Stantec

B.I.N. 1069120

SPECIAL NOTE: ALL DIMENSIONS ARE SHOWN IN MILLIMETERS UNLESS OTHERWISE NOTED

AS BUILT REVISIONS

SIGNATURE DATE

BRIGHTON AVENUE OVER CONNECTORS "H" & "I" AND RAMP "J"

NORTH ABUTMENT ELEVATION

STATE OF NEW YORK
DEPARTMENT OF TRANSPORTATION

FILENAME	REGION	DATE	DRAWING NO.
380466ZB.A1C	3	OCT. 2004	ST26-5

DESIGN SUPERVISOR RON NORTHROP JOB MANAGER RON NORTHROP DESIGNED BY LOWELL LINGO CHECKED BY RON NORTHROP ESTIMATED BY LOWELL LINGO DRAFTED BY RJ LAMPHEAR CHECKED BY LOWELL LINGO USER = *USER*

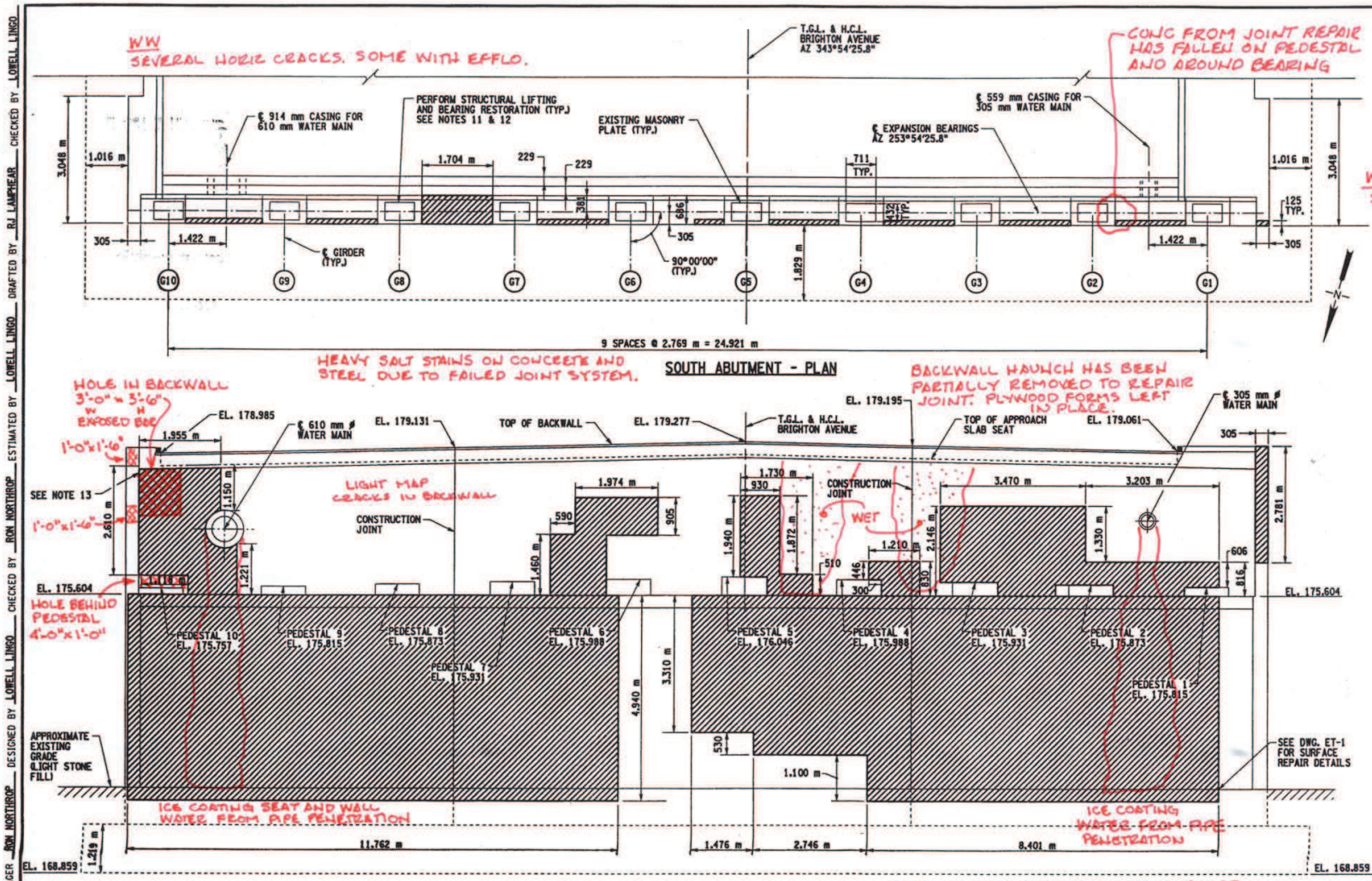

FED ROAD REG. NO.	STATE	CONTRACT NO.	SHEET NO.	TOTAL SHEETS
1	N.Y.	D259742	671	788

INTERSTATE ROUTE 505 ONONDAGA INTERCHANGE
BRIDGE REHABILITATION PROJECT (ELEMENT SPECIFIC)
VARIOUS BRIDGES ON INTERSTATES 81 & 690
CITY OF SYRACUSE
ONONDAGA COUNTY
P.I.N. 3804.66 B.I.N. 1069120

WW
SEVERAL HORIZ CRACKS
SOME WITH EFFLO

TABLE OF STRUCTURAL LIFTING

LOCATION	ITEM	QTY (EA)	DL (KN)	LL+I (KN)	TOTAL (KN)
PED. 1-10 EXP.	585.02 M	10	723	516	1239

LEGEND
- C-X — CORE LOCATION
- XX — PHOTO LOCATION
- DELAMINATION
- SPALLING
- CRACK
- MAP CRACKING
- MOISTURE

NOTES:
1. ALL DIMENSIONS SHOWN FOR CONCRETE REMOVAL ARE APPROXIMATE AND SHALL BE FIELD VERIFIED BY THE CONTRACTOR AND E/C.
2. ALL DIMENSIONS SHOWN FOR EXISTING ABUTMENT ARE APPROXIMATE AND SHALL BE FIELD VERIFIED BY THE CONTRACTOR AND E/C.
3. CONCRETE REMOVAL TO LIMITS SHOWN INCLUDES SOUND CONCRETE AROUND THE PERIMETER OF THE DETERIORATED CONCRETE, A.O.B.E.
4. WHEN REMOVING EXISTING CONCRETE, SAWCUT 5 mm MIN. TO PRODUCE NEAT REMOVAL LINES. ANY COST TO BE INCLUDED IN THE BID PRICE FOR ITEM 582.05 M.
5. ELEVATIONS ARE GIVEN FOR REFERENCE ONLY.
6. FOR REMOVAL DETAILS SEE DWG. BR-X.
7. RESTORE TO ORIGINAL DIMENSIONS.
8. PEDESTALS NUMBERED FROM WEST TO EAST.
9. NO DECORATIVE FINISHES WILL BE INSTALLED UNDER THIS CONTRACT.
10. REFER TO CONTRACT F.I.C. 65-28 FOR ORIGINAL CONSTRUCTION DETAILS.
11. STRUCTURAL LIFTING OPERATIONS FOR BEARING RESTORATION (ITEM 585.02 M - TYPE B LIFTING FROM ABUTMENT SEAT) SEE DWG. TSL-X
12. PERFORM HIGH ROCKER EXPANSION BEARING RESTORATION TO BEARINGS 1 - 10 (ITEM 15565.4302 M) SEE DWG. NOS. BR-6 AND BR-7.
13. THE CONTRACTOR SHALL REMOVE AND REINSTALL THE END DIAPHRAGM FOR ACCESS TO THIS REPAIR AREA LOCATED ON THE BACKWALL. TO BE PAID UNDER 10564.11 M.

B.I.N. 1069120

SPECIAL NOTE: ALL DIMENSIONS ARE SHOWN IN MILLIMETERS UNLESS OTHERWISE NOTED

AS BUILT REVISIONS

SIGNATURE DATE

BRIGHTON AVENUE OVER CONNECTORS "H" & "I" AND RAMP "J"

SOUTH ABUTMENT PLAN AND ELEVATION

STATE OF NEW YORK
DEPARTMENT OF TRANSPORTATION

FILENAME	REGION	DATE	DRAWING NO.
3804662B_A1A	3	OCT. 2004	ST26-3

DESIGN SUPERVISOR RON NORTHROP — JOB MANAGER RON NORTHROP — DESIGNED BY LOWELL LINGO — CHECKED BY RON NORTHROP — ESTIMATED BY LOWELL LINGO — DRAFTED BY RJ LAMPHEAR — CHECKED BY LOWELL LINGO

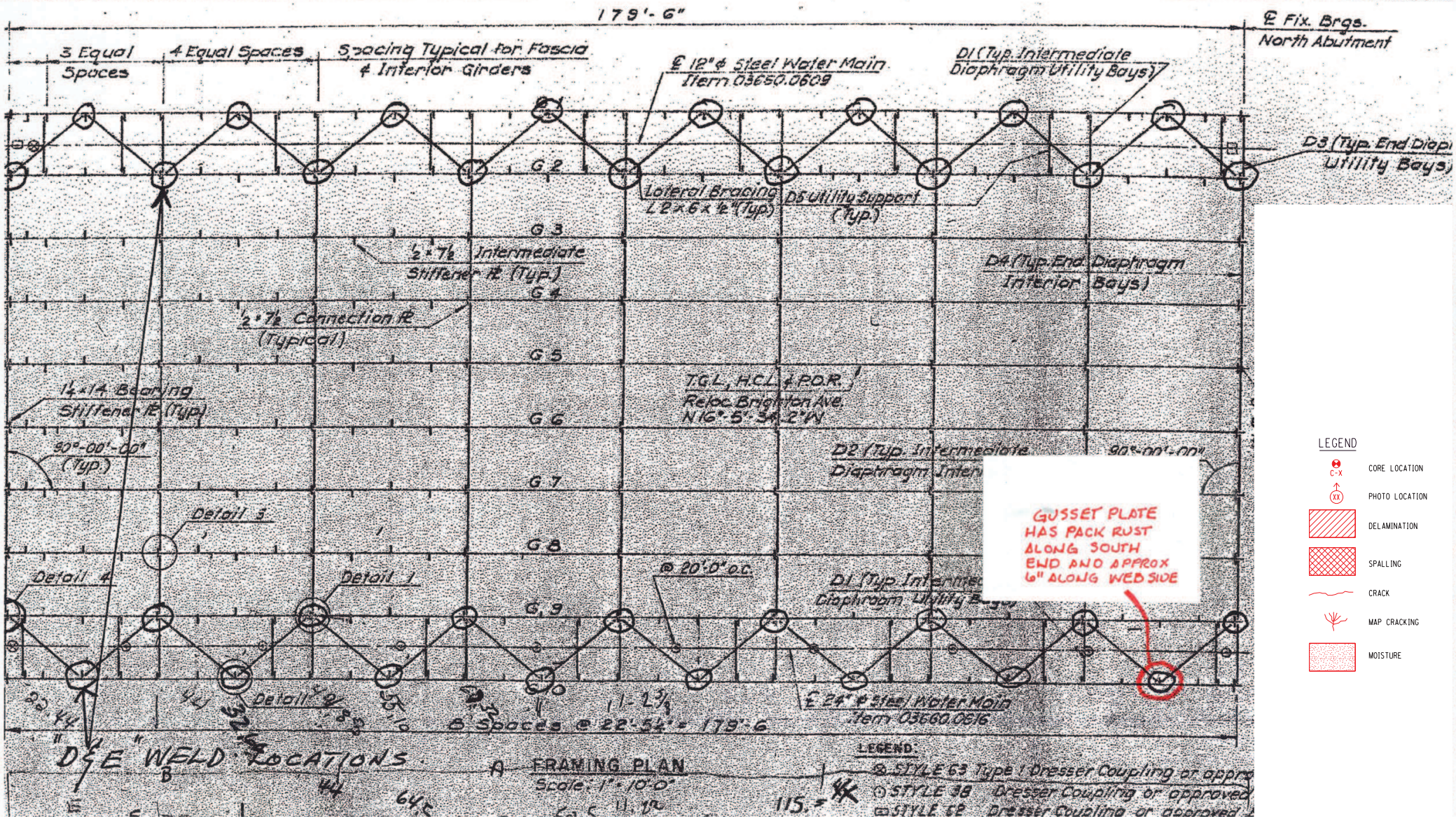
179'-6"
℄ Fix. Brgs. North Abutment
3 Equal Spaces
4 Equal Spaces
Spacing Typical for Fascia & Interior Girders
℄ 12"ϕ Steel Water Main Item 03650.0609
D1 (Typ. Intermediate Diaphragm Utility Bays)
D3 (Typ. End Diaph Utility Bays)
G 2
Lateral Bracing L 2×6×¼" (Typ)
D5 Utility Support (Typ.)
G 3
½×7½ Intermediate Stiffener PL (Typ.)
D4 (Typ. End Diaphragm Interior Bays)
G 4
½×7½ Connection PL (Typical)
G 5
T.G.L., H.C.L. & P.O.R. Reloc. Brighton Ave. N16°-5'-34.2"W
¼×14 Bearing Stiffener PL (Typ)
G 6
90°-00'-00" (Typ.)
D2 (Typ. Intermediate Diaphragm Inter
90°-00'-00"
G 7
Detail 3
GUSSET PLATE HAS PACK RUST ALONG SOUTH END AND APPROX 6" ALONG WEB SIDE
G 8
Detail 4
Detail 1
@ 20'-0" o.c.
D1 (Typ. Intermed Diaphragm Utility B
G 9
Detail 2
8 Spaces @ 22'-5¼" = 179'-6"
℄ 24"ϕ Steel Water Main Item 03660.0616
LEGEND:
STYLE 63 Type I Dresser Coupling or appro
STYLE 38 Dresser Coupling or approved
STYLE SE Dresser Coupling or approved
LEGEND
CORE LOCATION
PHOTO LOCATION
DELAMINATION
SPALLING
CRACK
MAP CRACKING
MOISTURE
D & E WELD LOCATIONS
A FRAMING PLAN
Scale: 1" = 10'-0"

IN-DEPTH PHOTO DOCUMENTATION

C&S Engineers, Inc.
499 Col. Eileen Collins Blvd.
Syracuse, New York 13212
Phone: (315) 455-2000
Fax: (315) 455-9667
www.cscos.com

Brighton Ave. over I-481 SB - BIN 1069120



DESCRIPTION: BEGIN ABUTMENT – FACING SOUTH

PHOTO 1



DESCRIPTION: BEGIN ABUTMENT – SOUTHEAST WINGWALL (RIGHT) – FACING SOUTHWEST - TYPICAL

PHOTO 2

C&S Engineers, Inc.
499 Col. Eileen Collins Blvd.
Syracuse, New York 13212
Phone: (315) 455-2000
Fax: (315) 455-9667
www.cscos.com

Brighton Ave. over I-481 SB - BIN 1069120



DESCRIPTION: BEGIN ABUTMENT – SOUTHEAST CHEEKWALL – LOOKING SOUTH – VERTICAL CRACK AND SPALL WITH SALT ACCUMULATION

PHOTO 3



DESCRIPTION: BEGIN ABUTMENT – PEDESTAL 2 – DEBRIS AND ICE ACCUMULATION ON PEDESTAL AND BEARING ELEMENTS

PHOTO 4

C&S Engineers, Inc.
499 Col. Eileen Collins Blvd.
Syracuse, New York 13212
Phone: (315) 455-2000
Fax: (315) 455-9667
www.cscos.com

Brighton Ave. over I-481 SB - BIN 1069120



DESCRIPTION: BEGIN ABUTMENT – PEDESTAL 3 - LOOKING SOUTH – SALT ACCUMULATION TYPICAL ON ALL BEARINGS

PHOTO 5



DESCRIPTION: BEGIN ABUTMENT – BAY 3 – LOOKING SOUTH – SALT AND WATER ON BACKWALL – CROSS FRAME RUSTED – TYPICAL ALL BAYS

PHOTO 6

C&S Engineers, Inc.
499 Col. Eileen Collins Blvd.
Syracuse, New York 13212
Phone: (315) 455-2000
Fax: (315) 455-9667
www.cscos.com

Brighton Ave. over I-481 SB - BIN 1069120



DESCRIPTION: BEGIN ABUTMENT– GIRDER 4 – LOOKING SOUTHWEST – BOTTOM FLANGE PAINT DELAMINATION

PHOTO 7



DESCRIPTION: BEGIN ABUTMENT – BAY 6 – DECK JOINT SPALLED WITH EXPOSED REBAR AND LEAKING

PHOTO 8

C&S Engineers, Inc.
499 Col. Eileen Collins Blvd.
Syracuse, New York 13212
Phone: (315) 455-2000
Fax: (315) 455-9667
www.cscos.com

Brighton Ave. over I-481 SB - BIN 1069120



DESCRIPTION: BEGIN ABUTMENT – BAY 9 – ABUTMENT STEM MAP-CRACKED WITH SALT AND ICE ACCUMULATION – TYPICAL ALL BAYS

PHOTO 9



DESCRIPTION: GIRDER 10 – WELDED GUSSET PLATE DEFORMED FROM PACK RUST – SEE PHOTO 11

PHOTO 10

C&S Engineers, Inc.
499 Col. Eileen Collins Blvd.
Syracuse, New York 13212
Phone: (315) 455-2000
Fax: (315) 455-9667
www.cscos.com

Brighton Ave. over I-481 SB - BIN 1069120



DESCRIPTION: GIRDER 10 – WELDED GUSSET PLATE DEFORMED FROM PACK RUST

PHOTO 11



DESCRIPTION: END ABUTMENT – BACKWALL – LOOKING SOUTH BEHIND GIRDER 10 – BACKWALL SPALL WITH EXPOSED REBAR

PHOTO 12

C&S Engineers, Inc.
499 Col. Eileen Collins Blvd.
Syracuse, New York 13212
Phone: (315) 455-2000
Fax: (315) 455-9667
www.cscos.com

Brighton Ave. over I-481 SB - BIN 1069120



DESCRIPTION: RIGHT FASCIA – NEAR END ABUTMENT – FASCIA SPALL WITH EXPOSED REBAR – INTERMITTENT LENGTHS ALONG ENTIRE FASCIA

PHOTO 13



DESCRIPTION: END ABUTMENT –BEARING 6 – TYPICAL ALL BEARINGS ON END ABUTMENT

PHOTO 14

C&S Engineers, Inc.
499 Col. Eileen Collins Blvd.
Syracuse, New York 13212
Phone: (315) 455-2000
Fax: (315) 455-9667
www.cscos.com

Brighton Ave. over I-481 SB - BIN 1069120



DESCRIPTION: END ABUTMENT – BAY 9 – BACKWALL CRACK FROM PEDESTAL TO WATER LINE

PHOTO 15



DESCRIPTION: END ABUTMENT – TYPICAL ELEVATION VIEW – CONCRETE IS WET FROM LEAKING WATER LINE

PHOTO 16

C&S Engineers, Inc.
499 Col. Eileen Collins Blvd.
Syracuse, New York 13212
Phone: (315) 455-2000
Fax: (315) 455-9667
www.cscos.com

Brighton Ave. over I-481 SB - BIN 1069120



DESCRIPTION: END ABUTMENT – LEFT WINGWALL – MINOR MAP-CRACKING AND RUST STAINING

PHOTO 17



DESCRIPTION: BRIDGE DECK - DELAMINATION AND EXISTING PATCHES

PHOTO 18

C&S Engineers, Inc.
499 Col. Eileen Collins Blvd.
Syracuse, New York 13212
Phone: (315) 455-2000
Fax: (315) 455-9667
www.cscos.com

Brighton Ave. over I-481 SB - BIN 1069120



DESCRIPTION: BEGIN DECK JOINT – SEAL DETERIORATED AND LEAKING

PHOTO 19



DESCRIPTION: BRIDGE DECK – CONCRETE DELAMINATION AND SPALLING

PHOTO 20

C&S Engineers, Inc.
499 Col. Eileen Collins Blvd.
Syracuse, New York 13212
Phone: (315) 455-2000
Fax: (315) 455-9667
www.cscos.com

Brighton Ave. over I-481 SB - BIN 1069120



DESCRIPTION: BRIDGE DECK

PHOTO 21



DESCRIPTION: BRIDGE ELEVATION

PHOTO 22

BIN 1069120
PHOTO LOCATION MAP

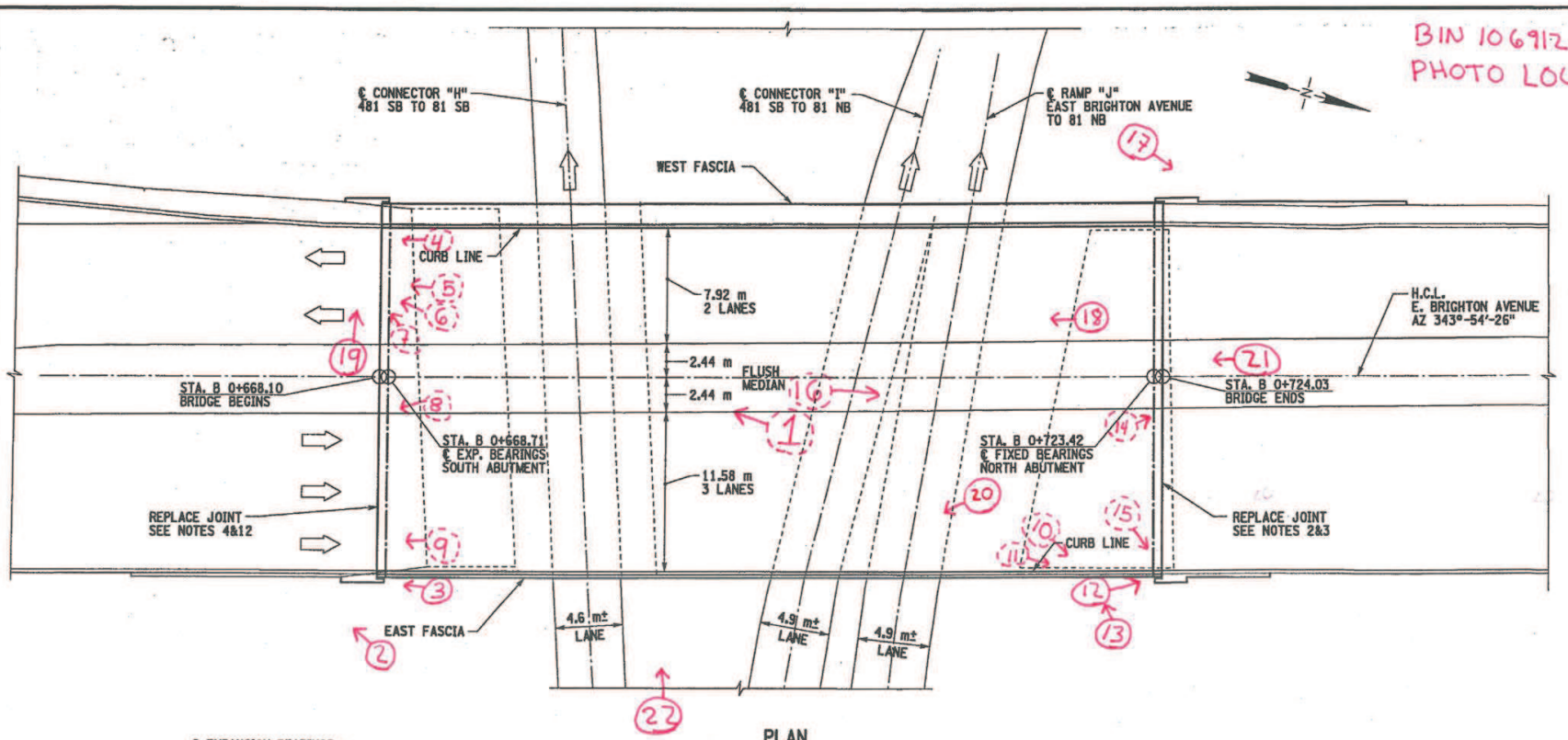

PLAN

2 0 5 10 m

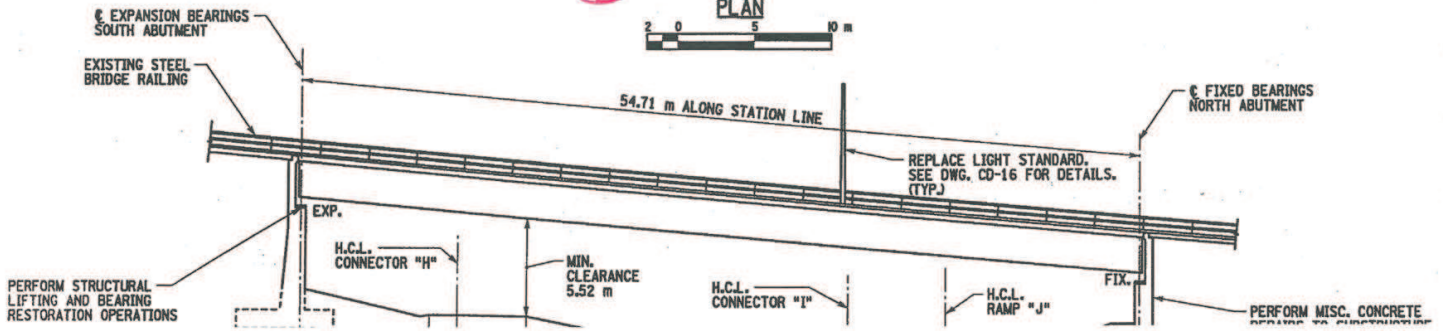

DESIGNED BY LOWELL LINGO CHECKED BY RON NORTHROP ESTIMATED BY LOWELL LINGO DRAFTED BY RJ LAMPHEAR CHECKED BY LOWELL LINGO

B.I.N. 10691

ASBESTOS DOCUMENTATION

ASBESTOS DOCUMENTATION FROM WATTS ARCHITECTURE & ENGINEERING, INC.

(WILL REPLACE BIN FOLDER ASBESTOS REPORT UPON COMPLETION)

ATHENICA
ENVIRONMENTAL SERVICES INC.
Tel (718) 784-7490
Fax (718) 784-4085

BULK (NOB) ASBESTOS ANALYSIS BY POLARIZED LIGHT MICROSCOPY AND TRANSMISSION ELECTRON MICROSCOPY

CLIENT: NYS DOT / Region 3
LABORATORY ID #: 04-09-256
DATES OF ANALYSIS: 10/1/04

PROJECT: Bin # 3/3-1069120
ANALYT. METHODOLOGIES: ELAP 198.1, ELAP 198.4
DATE OF REPORT: 10/12/04

LABORATORY RESULTS

CLIENT #	LAB. ID #	LOCATION	%ORG	%ASI	%AII	PLM RESULTS	TYPE OF ASBEST.	TEM RESULTS	TYPE OF ASBEST.	POSIT. / NEGAT.
01	04-09-256-01	Steel Paint Coating Bay 1 Gusset L @ Beg. Stem	30.25	10.90	58.86	**ND**	NA	**ND**	NA	**Negat.**
02	04-09-256-02	Steel Paint Coating G-3 @ Beg. Stem	34.30	13.37	52.33	**ND**	NA	**ND**	NA	**Negat.**
03	04-09-256-03	Steel Paint Coating G-9 @ Beg. Stem	42.03	7.25	50.72	**ND**	NA	**ND**	NA	**Negat.**

ANALYST
E. Sioukri

LABORATORY DIRECTOR
Spiro Dongaris

LABORATORY CERTIFICATION NUMBERS: NVLAP 101958, ELAP 10955

- Athenica Environmental Services Inc. (AES), is responsible only for information pertaining to samples taken by its employees.
- Samples will be stored for sixty (60) days. AES Inc., should be notified within this time frame for a true duplicate analysis.
- The report relates only to items tested. This report must not be used to claim product endorsement by NVLAP or any other agency of the U.S. Government. Test reports may not be reproduced except in full and with prior approval of AES Inc.
- The liability of Athenica Environmental Services Inc. with respect to the services charged, shall in no event exceed the amount of the invoice.

ATHENICA
ENVIRONMENTAL SERVICES INC.
45-09 GREENPOINT AVENUE
LONG ISLAND CITY, NY 11104
Tel. (718) 784-7490
Fax. (718) 784-4085

PROJECT NO. (ATHENICA FILE#) C003314

DATE 8/24/2004

METHOD OF SHIPMENT U.S. MAIL

INSPECTOR KEITH WAY

NUMBER OF SAMPLES 3

TYPE OF ANALYSIS REQUESTED [ ] PLM [X] NOB-PLM [X] NOB-TEM [ ] OTHERS

TURNAROUND TIME [ ] 6 HRS [ ] 12 HRS [ ] 24 HRS [X] OTHER HRS

COMMENTS ATT: CHRISTOPHER ANDERSON
333 E. WASHINGTON ST. SYRACUSE, N.Y. 13202

HOM. AREA	SAMLPLE #	SAMPLE DESCRIPTION	SAMPLE LOCATION	FIELD COMMENTS	LABORATORY RESULTS		
					PLM	PLM-NOB	TEM-NC
R-3	01	STEEL PAINT COAT	BAY 1 GUSSET PL @ BEG STEM				
R-3	02	"	G-3 @ BEG STEM				
R-3	03	"	G-9 @ BEG. STEM				

RANSMITTAL OF RESULTS :
[X] STANDARD
] TELEPHONE RESULTS TO
] FAX RESULTS TO

TELEPHONE # : (315) 428-4628
FAX # :

BATCH # : 04-09-256

CHAIN OF CUSTODY RECORD

RELINQUISHED BY :	Keith Way	DATE :	8/24/2004	TIME :	
ECEIVED BY :	NW/NA/JG	DATE :	9/29/2004	TIME :	
NALYST :		DATE :	10/1/2004	TIME :	

ABORATORY ACCREDITATION :
IVLAP# 101958 ELAP# 10955

NEW YORK STATE
DEPARTMENT OF TRANSPORTATION
D031085 P.I.N 3501.60

LEVEL 1 LOAD RATING
B.I.N. 1069120
Brighton Avenue over
I-481 Ramps to I-81

LOAD RATING SUMMARY TABLE (LOAD FACTOR)					
CONTROLLING MEMBER	CONTROLLING PARAMETER	LIVE LOAD	LIVE LOAD TYPE	INVENTORY RATING	OPERATING RATING
(G2) INTERIOR GIRDER	DESIGN FLEXURE	HS20-44	LANE + PEDESTRIAN	HS 38.5 (69.4 TONS)	HS 64.4 (115.9 TONS)

DOES NOT INCLUDE FUTURE WEARING COURSE

ANALYSIS METHOD:LOAD FACTOR

RECOMMENDED POSTING AS-IS CONDITION: _____ Tons __X__ None

CALCULATED BY:



DATE: 5-16-2014

QUALITY ASSURANCE BY:



DATE: 5-28-2014

C&S COMPANIES®

499 Col. Eileen Collins Blvd.
Syracuse, NY 13212
phone 315-455-2000
fax 315-455-9667
www.cscos.com

ENGINEERS
DESIGN BUILD
TECHNICAL RESOURCES
OPERATIONS

C&S Engineers, Inc.
Syracuse Hancock International Airport
Syracuse, NY 13212
phone 315-455-2000
fax 315-455-9667
www.cscos.com

TECHNICAL MEMORANDUM

TO: FILE (190.514.001)

FROM: JESSICA S. BAUER, P.E.
NYSPE 084915

DATE: FEBRUARY 24, 2014

C&S PROJECT NO.: 190.514.001

RE: SEISMIC ASSESSMENT SUMMARY
NEW YORK STATE DEPARTMENT OF TRANSPORTATION
D031085; PIN 3501.60; I-81

BIN: 1069120 Seismic Assessment

This memorandum summarizes the seismic assessment conducted for BIN 1069120 as part of the Interstate 81 Project in Syracuse, NY. The purpose of the assessment is to determine if seismic retrofits are warranted at the superstructure to substructure connection, and if further seismic evaluation of the structure is required. This memorandum will give the assessment results, retrofits required and recommendations for further seismic evaluation of the structure.

ASSESSMENT PROCEDURE

The seismic assessment was performed in accordance with the FHWA Seismic Retrofitting Manual for Highway Structures: Part 1 - Bridges, January 2006. As per the referenced manual, seismic assessment was performed for both lower level and upper level earthquake ground motion. The lower level earthquake ground motion has a reasonable likelihood of occurrence within the life of the bridge (50% probability of exceedance within a 75 year bridge life). The upper level earthquake ground motion has a finite likelihood of occurrence within the life of the bridge (7% probability of exceedance within a 75 year bridge life).

Values for the spectral acceleration for the Syracuse area used in the assessment are as follows:

- Lower Level Earthquake Ground Motion for a Short Period (0.2 seconds): $S_S = 0.0251$
- Lower Level Earthquake Ground Motion for a Long Period (1.0 seconds): $S_1 = 0.0076$
- Upper Level Earthquake Ground Motion for a Short Period (0.2 seconds): $S_S = 0.139$
- Upper Level Earthquake Ground Motion for a Long Period (1.0 seconds): $S_1 = 0.047$

These values are considered constant and are the same for all seismic assessments of bridges in the Syracuse area.

The Site Class is based on the soil conditions at the bridge location. It was determined that this parameter has little effect on the results of the seismic assessment because the spectral

You created this PDF from an application that is not licensed to print to novaPDF printer (http://www.novapdf.com)

acceleration values for the Syracuse area are small. Based on this, a site class of D was used for all seismic assessments of bridges in the Syracuse area.

Bridge parameters used in the seismic assessment were retrieved from the record drawings and WinBolts data.

The seismic assessment takes into account the anticipated service life, importance, and the seismic exposure of the bridge to determine a seismic retrofit category (SRC). The SRC is then used to determine seismic evaluation methods and retrofit measures. There are four SRCs, A through D. Seismic retrofit category A is the lowest category; bridges in this category do not require retrofits or further seismic evaluation. Seismic retrofit category D is the highest category; bridges in this category requiring the most rigorous seismic evaluations and retrofits.

ASSESSMENT RESULTS

The SRC for the bridge is "**C**" for lower level earthquake ground motion and "**B**" for upper level earthquake ground motion.

RETROFITS REQUIRED

Bearing replacements and seat width improvements are not required at the abutments. Additional retrofits may be required if further seismic evaluation is needed.

RECOMMENDATIONS FOR FURTHER SEISMIC EVALUATION

For the lower level earthquake ground motion, it is recommended that capacity/demand ratios for bridge components are calculated as per Section 5.4 of the referenced manual. For the upper level earthquake ground motion, it is recommended that the capacities of the bearings are checked as per Section 5.2 of the referenced manual.

Retrofit cost estimates will be provided after any further required seismic evaluations are completed.

You created this PDF from an application that is not licensed to print to novaPDF printer (http://www.novapdf.com)

C&S Engineers, Inc.
Syracuse Hancock International Airport
Syracuse, NY 13212
phone 315-455-2000
fax 315-455-9667
www.cscos.com

TECHNICAL MEMORANDUM

TO: **FILE (190.514.001)**

FROM: **PAUL BYRNE, P.E.**
NYSPE 055928

DATE: **JUNE 11, 2014**

C&S PROJECT NO.: 190.514.001

RE: **NEW YORK STATE DEPARTMENT OF TRANSPORTATION**
D031085; PIN 3501.60; I-81 Opportunities, BIN 1069120 Fatigue Evaluation

---

This memorandum documents a fatigue evaluation conducted for the existing Interstate 81 Viaduct Project. Existing structures with AASHTO Category D, E, and E' fatigue-prone details require 100% hands-on inspection unless proven to be exempt. The purpose of the evaluation is to assess the remaining life of fatigue-prone components.

EVALUATION PROCEDURES

The fatigue evaluation was performed in accordance with the AASHTO Guide Specification for Fatigue Evaluations of Existing Steel Bridges, 1990. Fatigue-prone welds identified in the biennial inspection reports were located on record drawings and confirmed visually in the field. Additional information concerning fatigue-prone welds located in BIN folders was also obtained and reviewed prior to inspection.

EVALUATION RESULTS

The results of the fatigue evaluation of the existing bridge are shown below. The remaining safe fatigue life of the fatigue components have **not been exhausted**.

Fatigue Detail Location	Remaining Safe Fatigue Life (Years)	Remaining Mean Fatigue Life (Years)
Exterior Girder, G1 Gusset Plate at Bottom Flange	473.80	2432.45
Exterior Girder, G10 Gusset Plate at Bottom Flange	519.97	2659.63
Interior Girder, G2 Gusset Plate at Bottom Flange	455.97	2344.71
Interior Girder, G9 Gusset Plate at Bottom Flange	521.32	2666.29

E. Recommendations:

The purpose of this deck evaluation is to document and determine existing conditions of the deck. It will be used as a tool for developing the scope of work and cost estimates for the development and comparison of alternatives for the overall project.

The total damaged area is approximately 14% of the total deck area. Due to the age, condition and high chloride-ion content of the bridge deck concrete, the bridge deck should be rehabilitated or replaced to meet current standards and to mitigate excessive future maintenance costs.

Option 1 – Scarify and Bridge Deck Overlay

The maximum service life this option would provide is 25 years. The design life of this project is 30 years (ETC +30). This option does not meet the project objectives of obtaining 30+ years of service life.

Option 2 – Bridge Deck Rehabilitation with 100% Deep Removal

This option will involve partial depth reconstruction with top mat rebar exposure of the entire bridge deck to remove the chloride contaminated concrete (100% deep removal). The existing bridge deck thickness is 9 ¼" with 3 ¼" of concrete cover over the top mat of reinforcing. The proposed partial depth reconstruction will include the addition of ¼" of concrete to provide the standard 9 ½" bridge deck thickness. The existing top mat of reinforcing bars will be removed and replaced to accommodate the standard 3" of concrete cover. The existing 2-rail bridge rail on the east side of the bridge will be removed and replaced with a single-slope concrete barrier. The existing sidewalk, granite curb and 4-rail bridge rail on the west side of the bridge will be removed and replaced with a new sidewalk, curb, and vertical-faced concrete barrier with pedestrian fencing attached on top of the barrier. The existing approach slabs will receive the same repair treatment as the deck. The existing deteriorated bridge joints will be

replaced with armorless bridge joints. The Level 1 Load Rating for the final condition was found to be acceptable. This option would provide a service life of 35 years to the bridge deck. The construction cost of this option is $ 1.520 million.

Option 3 – Bridge Deck Replacement with Cast-In-Place Concrete

This option will involve the complete demolition of the existing bridge deck, 2-rail bridge rail along the east side of the bridge, sidewalk and curb with 4-rail bridge rail, bridge deck joints and approach slabs. The bridge deck will be replaced with a new concrete deck, new single slope concrete barrier along the east side and sidewalk and curbs with vertical-faced concrete barrier with pedestrian fencing attached on top of the barrier, and new armorless bridge joints. The approach slabs will also be replaced under this option. The new bridge deck would be 9 ½" standard thickness as compared to the 9 ¼" existing thickness. The Level 1 Load Rating for the final condition was found to be acceptable. This option would provide a service life of 40 years to the bridge deck. The construction cost of this option is $ 1.75 million.

Option 4 – Bridge Deck Replacement with Pre-cast Concrete Deck Panels

This option will have the highest construction cost of all of the options however; traffic control costs may be lower due to reduced construction time. Comparison of accelerated construction to conventional construction is beyond the scope of work for this project at this time.

IN-DEPTH INSPECTION REPORT

D031085 P.I.N. 3501.60

B.I.N. 1069131

TEAM LEADER Andrew J. Fuller, P.E. 59848
NYSPE LICENSE #

ASSISTANT TEAM LEADER Jeffrey M. Reina, P.E.
ASSISTANT TEAM LEADER Logan Bessel
ASSISTANT TEAM LEADER Jerome Getter

FEATURE CARRIED I - 481 Southbound
FEATURE CROSSED Driveway to Quarry Road

DATE FIELD WORK BEGAN December 20, 2013
DATE FIELD WORK COMPLETED January 29, 2014

TABLE OF CONTENTS

- TP 349 & 350
- IN-DEPTH CONDITION DOCUMENTATION
- IN-DEPTH PHOTO DOCUMENTATION
- ASBESTOS REPORT

TP 349 & TP 350

BRIDGE ELEMENT RATINGS

Inspection Date: 3/26/2012 RC: 33 BIN: 1069131

Bridge Ratings

Carried: 481I 481I33012010 Crossed: DRIVWY TO QUARRY CheckValue: 1,795,040,736

Inspection Agency: 10 - NYSDOT Type of Inspection: 1 - BIENNIAL
GTMS: 302 -- Steel - Stringer/Multi-Beam or Girder
POSTINGS: See Gen Rec Page 1 for Postings at time of inspection.
Further Investigation Needed: No
State Highway Number: 76-2 Milepoint: 3.32 AADT/Yr: 29995 / 2010
Orientation: 3 - East Political Unit: 0233 - Town of DEWITT Year Built: 1980
Total Spans: 1 Ramp Bridge Attached To Span: NA BIN: NA
General Recommendation: 5 Computed Condition Rating: 5.078

Abutment Ratings:	**Beg Abut**	**End Abut**
Joint with Deck	5	5
Bearings, Bolts, Pads	5	5
Seats and Pedestals	5	5
Backwall	5	5
Stem (Breastwall)	5	5
Erosion or Scour	5	5
Footings	9	9
Piles	8	8
Recommendation	5	5

Wingwall Ratings:	**Beg Abut**	**End Abut**
Walls	4	5
Footings	9	9
Erosion or Scour	6	6
Piles	8	8

Channel Ratings:	**Channel**
Stream Alignment	8
Erosion and Scour	8
Waterway Opening	8
Bank Protection	8

Approach Ratings:	**Approaches**
Drainage	4
Embankment	5
Settlement	4
Erosion	5
Pavement	3
Guide Railing	3

Number of Flags Issued:

RED: 0 Yellow: 0 Safety: 1

Vulnerability Reviews Recommended: 1=Yes, 2=No, 3=NA, X=NotActive

Hydraulic: 3	Overload: X	Steel: 2
Collision: 2	Concrete: X	Seismic: X

Inspector's Signature: CheckValue: 1,795,040,736 Date: 3/26/2012

David Hann,PE () (Inspector ID:3000055)

Signed copy of this inspection report is available in the appropriate NYSDOT Regional Office

Reviewed By: Date: 5/7/2012

James R. Manning,PE () (QC ID:3000023)

Signed copy of this inspection report is available in the appropriate NYSDOT Regional Office

Inspection Date: 3/26/2012 RC: 33 BIN: 1069131

Span Ratings

Carried: 481I 481I33012010 Crossed: DRIVWY TO QUARRY CheckValue: 1,795,040,736

Deck Element Ratings:	**001**
Wearing Surface	6
Curbs	4
Sidewalks, Fascias	5
Railings, Parapets	5
Scuppers	8
Gratings	8
Median	8
Mono Deck Surface	6

Superstructure Ratings:	**001**
Structural Deck	4
Primary Members	6
Secondary Members	6
Paint	5
Joints	8
Recommendation	5

Pier Ratings:	**001**
Bearings, Bolts, Pads	8
Pedestals	8
Top of Cap or Beam	8
Stem Solid Pier	8
Cap Beam	8
Pier Columns	8
Footings	8
Erosion or Scour	8
Piles	8
Recommendation	8

Utility Ratings:	**001**
Lighting	8
Sign Structure	6
Utilities and Support	8

Field Notes:

Field Date	Arrival	Departure	Temp (C)	Temp (F)	Weather Conditions
3/26/2012	1:00:00 PM	5:00:00 PM		40	Sunny

IN-DEPTH CONDITION DOCUMENTATION

IN DEPTH INSPECTION REPORT

BIN 1069131

Visual Inspection

Miscellaneous concrete repairs were made to the abutments and approach slabs in 2002 under contract D259214. Deck joints were also replaced under this contract.

Cracks, spalls, and other field observations are shown on the plans. Below is a brief summary of conditions for each feature.

Superstructure

Deck – See Bridge Deck Evaluation Report

Steel – See Structural Steel Inspection Summary

Bearings – Inner bearing elements typically have minor rust scale. The outer bearings have moderate rust.

Substructure

West Abutment – The concrete backwall and pedestals contained minor isolated areas of delaminated concrete and cracking. The stem contained delaminated concrete below pedestals 2, 3, 4, and 6. The wingwall and midwall contained only minor isolated areas of delaminated concrete and cracking.

East Abutment – The concrete backwall and pedestals contained minor isolated areas of delaminated concrete and cracking. The stem had delaminated concrete below pedestals 1, 2, and 6. Rust staining was observed on the stem near pedestal 6. The wingwall and midwall contained only minor isolated areas of delaminated concrete and cracking.

STRUCTURAL STEEL INSPECTION SUMMARY

BIN 1069131

Special Emphasis Inspection Required

Non-Redundant/Fracture Critical Members – No

Pin and Hangers – No

Fatigue-Prone Welds – No

Non-Categorized Fatigue-Prone Details – No

Other (Specified in Text) – No

Special Emphasis Details

No Special emphasis details.

Overall Steel Condition

The steel showed no sign of major deterioration. There were no isolated pockets of major section loss and no areas of concern were observed.

Paint

The paint system was deteriorated along flanges of girders and webs of fascia girders.

Section Loss

Due to the age of the steel a blanket 5% section loss should be used in load rating.

BIN 1069131
481 SB OVER QUARRY ROAD

DRAFTED BY
CHECKED BY
ESTIMATED BY
CHECKED BY
QUANTITIES BY

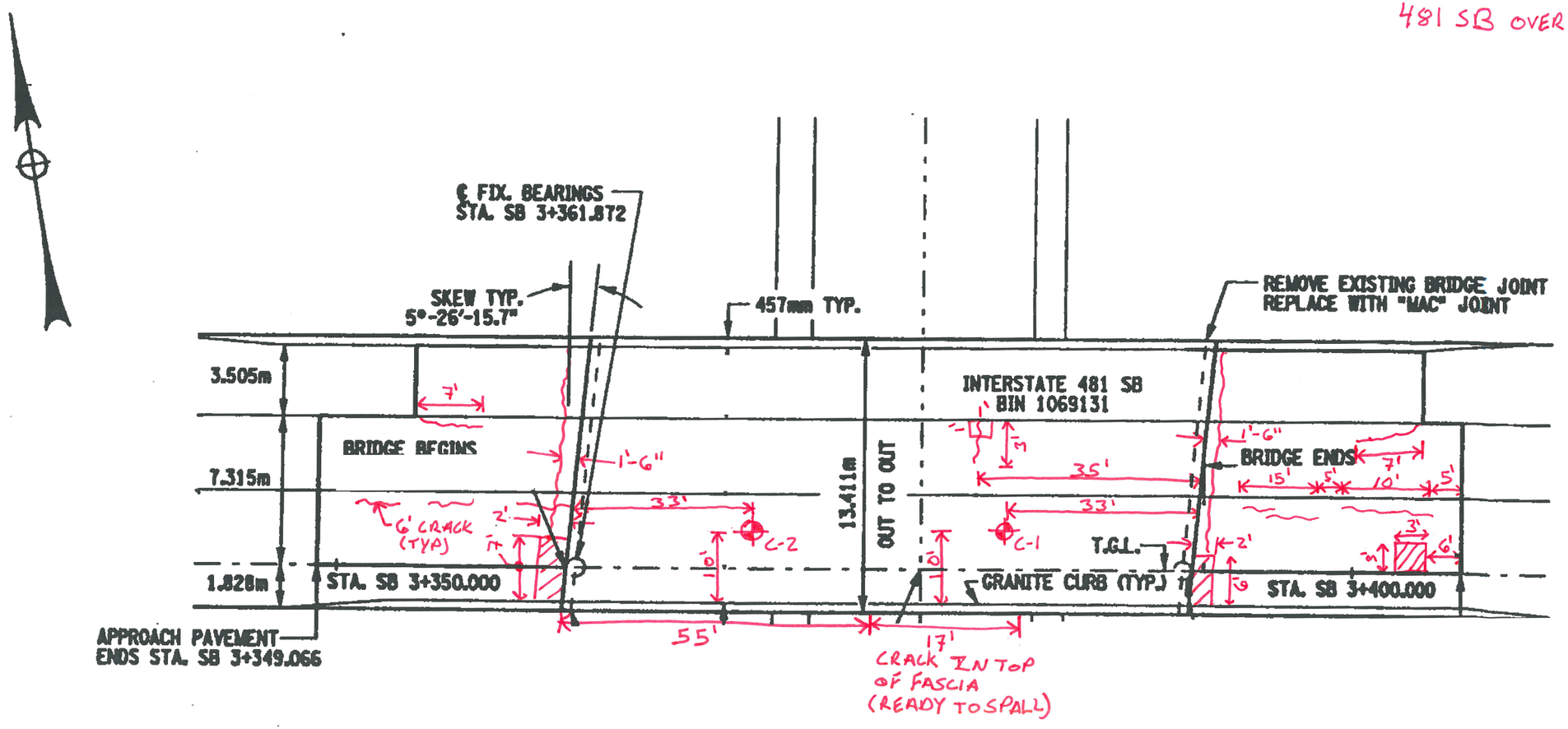

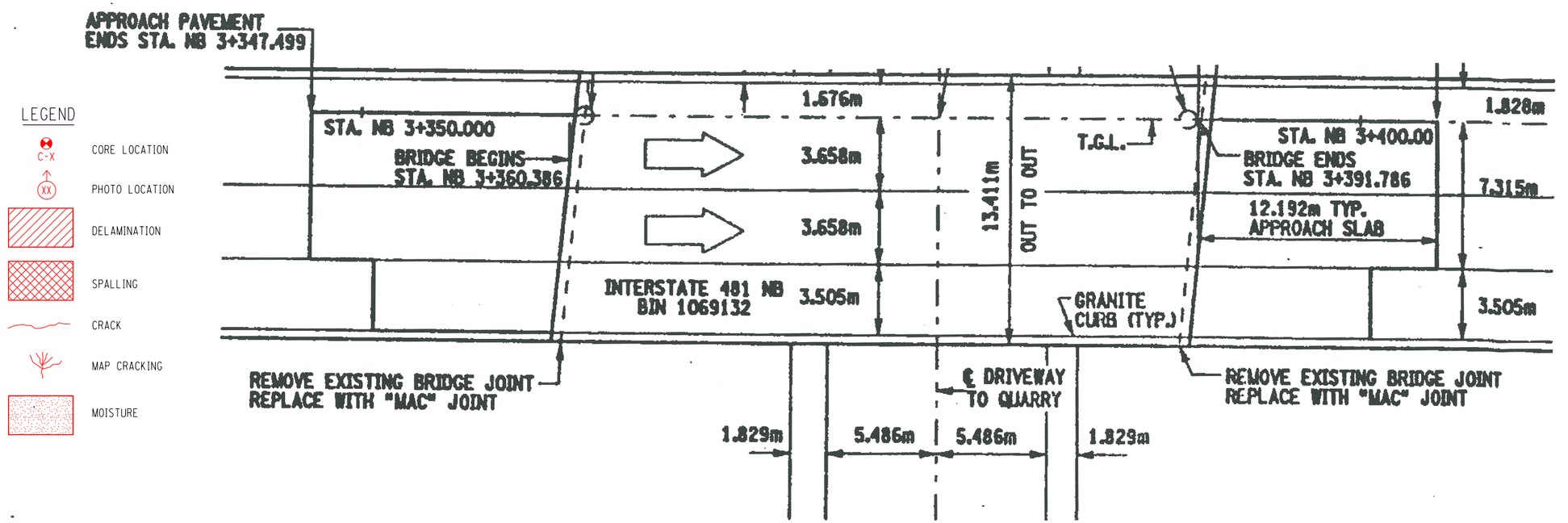

FIELD CHANGE D95042

FED. ROAD REG. NO.	STATE	FEDERAL AID PROJECT NO.	SHEET NO.	TOTAL SHEETS
1	N.Y.	I-[illegible]-2(138)	400FI	571

INTERSTATE ROUTE CONNECTION 571
FOREST INTERCHANGE - JAMESVILLE
ONONDAGA COUNTY

LEGEND

- C-X CORE LOCATION
- XX PHOTO LOCATION
- DELAMINATION
- SPALLING
- CRACK
- MAP CRACKING
- MOISTURE

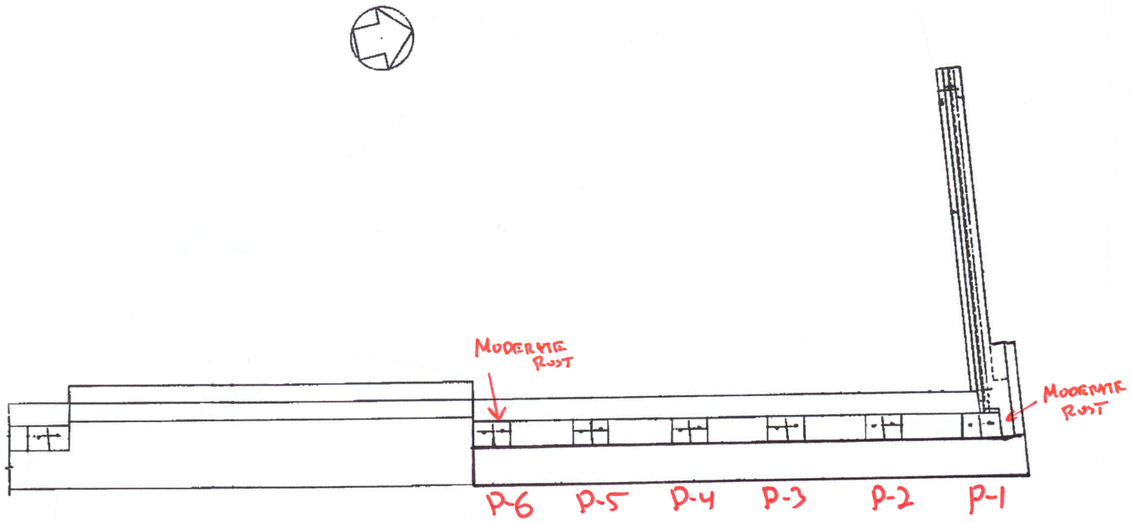

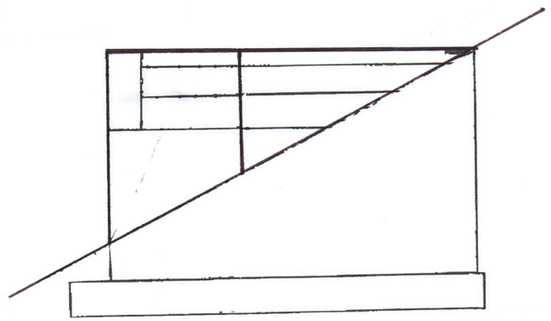

WINGWALL ELEVATION

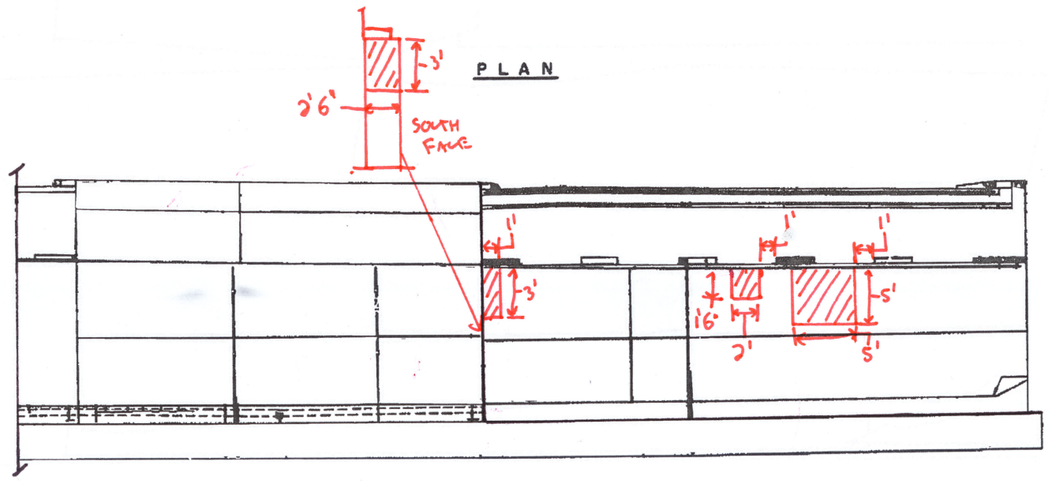

PLAN

ELEVATION

BIN 1069131
I 481 S13
OVER
QUARRY ROAD

FIELD CHANGE
BRIDGE NO. 5

I-481 OVER RELOCATED
GENERAL CRUSHED STONE COMPANY DRIVEWAY
WEST ABUTMENT WESTBOUND
AND MEDIAN WALL

Prepared and recommended GOODING & O'BEA, INC. Consulting Engineers

Date 12/1/75

DWG. NO.	SCALE	DATE	GOODING & O'BEA, INC. CONSULTING ENGINEERS
5	3/16"=1'-0"	Nov. 1975	

FIELD CHANGE D95042

FIELD CHANGE D95042

FED. ROAD DIST. NO.	STATE	FEDERAL AID PROJECT NO.	SHEET NO.	TOTAL SHEETS
1	N. Y.	[illegible]	403F1	571

INTERSTATE ROUTE CONNECTION 571
FOREST INTERCHANGE - JAMESVILLE
ONONDAGA COUNTY

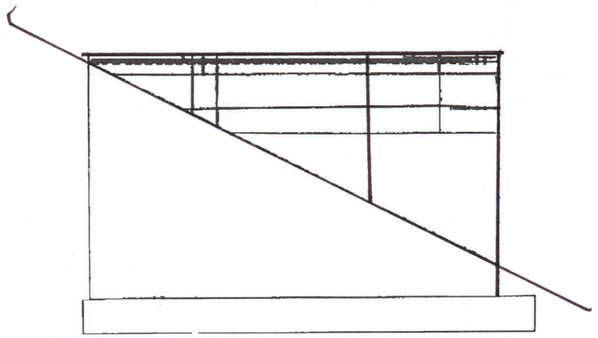

WINGWALL ELEVATION

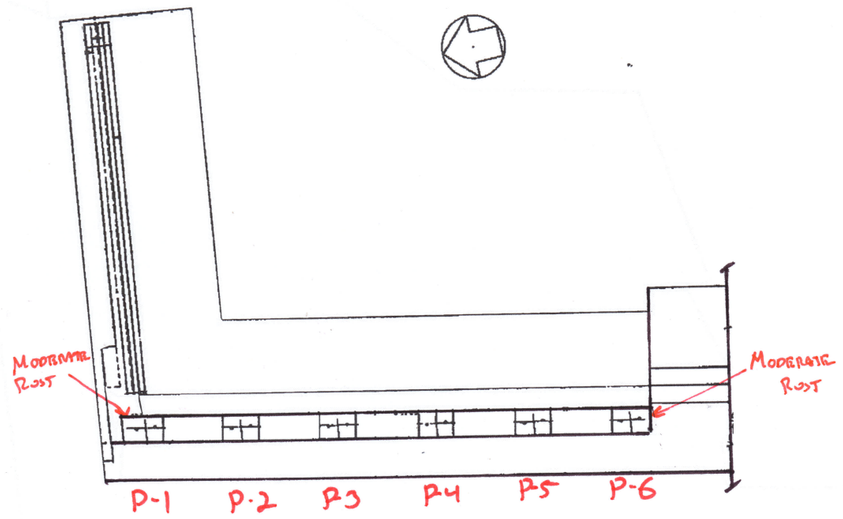

PLAN

NOTES- GIRDER 1 - RUST ON OUTER EDGE OF BOTTOM FLANGE. MINOR RUST ON OTHER GIRDERS.

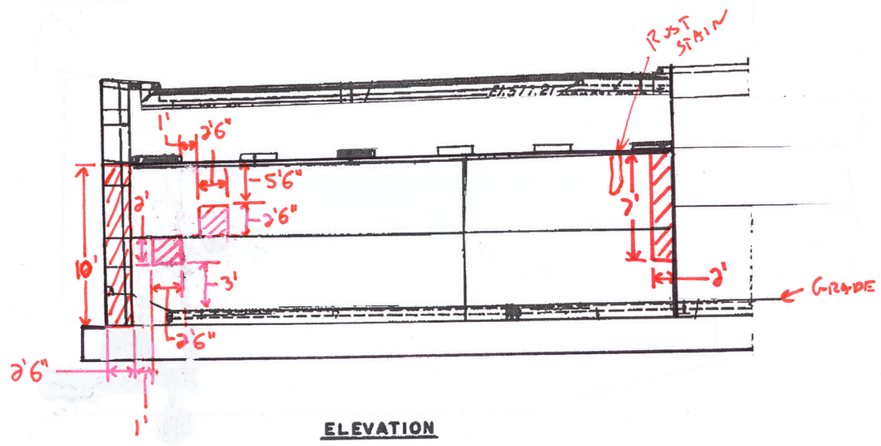

ELEVATION

LEGEND

- CORE LOCATION
- PHOTO LOCATION
- DELAMINATION
- SPALLING
- CRACK
- MAP CRACKING
- MOISTURE

BIN 1069131
I 481 SB
OVER
QUARRY ROAD

BRIDGE NO. 5
I-481 OVER RELOCATED
GENERAL CRUSHED STONE COMPANY DRIVEWAY

EAST ABUTMENT WESTBOUND

Date 12/1/75

Consulting Engineer:

SHT. NO.	SCALE	DATE	
8	3/16" = 1'-0" & as noted	Nov. 1975	GOODKIND & O'DEA, INC. CONSULTING ENGINEERS

FIELD CHANGE D95042

IN-DEPTH PHOTO DOCUMENTATION

C&S Engineers, Inc.
499 Col. Eileen Collins Blvd.
Syracuse, New York 13212
Phone: (315) 455-2000
Fax: (315) 455-9667
www.cscos.com

I-481 SB over Quarry Rd - BIN 1069131



DESCRIPTION: WEST ABUTMENT – BEARING 1 – MODERATE RUST

PHOTO 1



DESCRIPTION: WEST ABUTMENT – PEDESTAL 1 – TYPICAL CONCRETE

PHOTO 2

C&S Engineers, Inc.
499 Col. Eileen Collins Blvd.
Syracuse, New York 13212
Phone: (315) 455-2000
Fax: (315) 455-9667
www.cscos.com

I-481 SB over Quarry Rd - BIN 1069131



DESCRIPTION: WEST ABUTMENT – BEARING 4 - TYPICAL

PHOTO 3



DESCRIPTION: WEST ABUTMENT – BEARING 6 – MODERATE RUST

PHOTO 4

C&S Engineers, Inc.
499 Col. Eileen Collins Blvd.
Syracuse, New York 13212
Phone: (315) 455-2000
Fax: (315) 455-9667
www.cscos.com

I-481 SB over Quarry Rd - BIN 1069131



DESCRIPTION: WEST ABUTMENT – BACKWALL – BETWEEN GIRDERS 2 AND 3 – TYPICAL CONCRETE

PHOTO 5



DESCRIPTION: WEST ABUTMENT – STEM – BETWEEN PEDESTALS 2 AND 4 – DELAMINATED CONCRETE

PHOTO 6

C&S Engineers, Inc.
499 Col. Eileen Collins Blvd.
Syracuse, New York 13212
Phone: (315) 455-2000
Fax: (315) 455-9667
www.cscos.com

I-481 SB over Quarry Rd - BIN 1069131



DESCRIPTION: WEST ABUTMENT – STEM – BELOW PEDESTAL 6 AND AROUND CORNER TO MIDWALL – DELAMINATED CONCRETE

PHOTO 7



DESCRIPTION: EAST ABUTMENT – BEARING 1 – MODERATE RUST

PHOTO 8

C&S Engineers, Inc.
499 Col. Eileen Collins Blvd.
Syracuse, New York 13212
Phone: (315) 455-2000
Fax: (315) 455-9667
www.cscos.com

I-481 SB over Quarry Rd - BIN 1069131



DESCRIPTION: EAST ABUTMENT – PEDESTAL 2 – TYPICAL CONCRETE

PHOTO 9



DESCRIPTION: EAST ABUTMENT – BEARING 6 – MODERATE RUST

PHOTO 10

C&S Engineers, Inc.
499 Col. Eileen Collins Blvd.
Syracuse, New York 13212
Phone: (315) 455-2000
Fax: (315) 455-9667
www.cscos.com

I-481 SB over Quarry Rd - BIN 1069131



DESCRIPTION: EAST ABUTMENT – STEM – UNDER PEDESTALS 1 AND 2 –DELAMINATED CONCRETE

PHOTO 11



DESCRIPTION: EAST ABUTMENT – STEM – UNDER PEDESTAL 6 – RUST STAIN AND DELAMINATED CONCRETE

PHOTO 12

C&S Engineers, Inc.
499 Col. Eileen Collins Blvd.
Syracuse, New York 13212
Phone: (315) 455-2000
Fax: (315) 455-9667
www.cscos.com

I-481 SB over Quarry Rd - BIN 1069131



DESCRIPTION: EAST ABUTMENT – BACKWALL – BETWEEN GIRDERS 3 AND 4 – TYPICAL CONCRETE

PHOTO 13



DESCRIPTION: WEST ABUTMENT WINGWALL – FACING SOUTH

PHOTO 14

C&S Engineers, Inc.
499 Col. Eileen Collins Blvd.
Syracuse, New York 13212
Phone: (315) 455-2000
Fax: (315) 455-9667
www.cscos.com

I-481 SB over Quarry Rd - BIN 1069131



DESCRIPTION: WEST ABUTMENT – FACING WEST

PHOTO 15



DESCRIPTION: WEST ABUTMENT – MIDWALL – FACING WEST

PHOTO 16

C&S Engineers, Inc.
499 Col. Eileen Collins Blvd.
Syracuse, New York 13212
Phone: (315) 455-2000
Fax: (315) 455-9667
www.cscos.com

I-481 SB over Quarry Rd - BIN 1069131



DESCRIPTION: EASE ABUTMENT – WIDWALL – FACING EAST

PHOTO 17



DESCRIPTION: EAST ABBUTMENT – FACING EAST

PHOTO 19

C&S Engineers, Inc.
499 Col. Eileen Collins Blvd.
Syracuse, New York 13212
Phone: (315) 455-2000
Fax: (315) 455-9667
www.cscos.com

I-481 SB over Quarry Rd - BIN 1069131



DESCRIPTION: EAST ABUTMENT WINGWALL – FACING SOUTH

PHOTO 19



DESCRIPTION: ELEVATION – FACING SOUTH

PHOTO 20

C&S Engineers, Inc.
499 Col. Eileen Collins Blvd.
Syracuse, New York 13212
Phone: (315) 455-2000
Fax: (315) 455-9667
www.cscos.com

I-481 SB over Quarry Rd - BIN 1069131



DESCRIPTION: DECK – BEGIN APPROACH FACING EAST

PHOTO 21

DESCRIPTION:

PHOTO

Photo Log Map

N

LEGEND

XX PHOTO LOCATION

XX HIDDEN PHOTO LOCATION

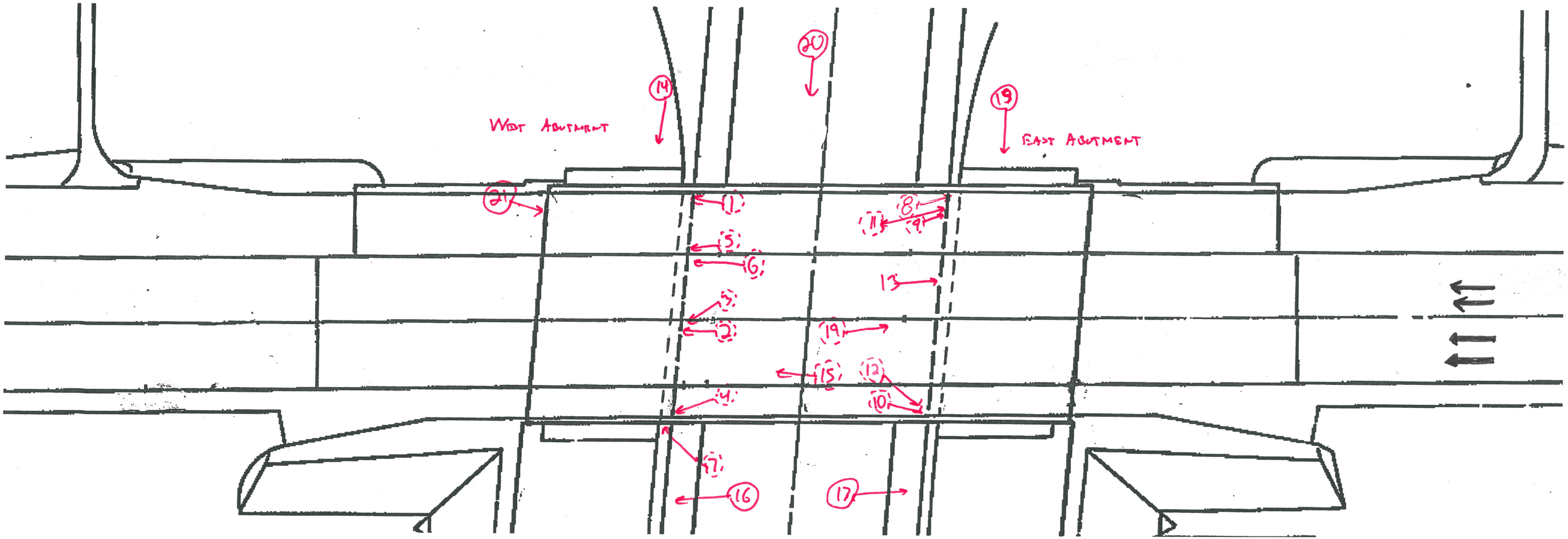

BIN 1069131
I481 SB over
Quarry Road

ASBESTOS DOCUMENTATION

ASBESTOS DOCUMENTATION FROM WATTS ARCHITECTURE & ENGINEERING, INC.

(WILL REPLACE BIN FOLDER ASBESTOS REPORT UPON COMPLETION)

ATHENICA
ENVIRONMENTAL SERVICES INC.
Tel (718) 784-7490
Fax (718) 784-4085

BULK (NOB) ASBESTOS ANALYSIS BY POLARIZED LIGHT MICROSCOPY AND TRANSMISSION ELECTRON MICROSCOPY

3

CLIENT: NYS DOT, Region 3
LABORATORY ID #: 04-04-107
DATES OF ANALYSIS: 04/29/04

PROJECT: Bin # 1069131
ANALYT. METHODOLOGIES: ELAP 198.1, ELAP 198.4
DATE OF REPORT: 04/30/04

LABORATORY RESULTS

CLIENT #	LAB. ID #	LOCATION	%ORG	%ASI	%AII	PLM RESULTS	TYPE OF ASBEST.	TEM RESULTS	TYPE OF ASBEST.	POSIT. / NEGAT.
01	04-04-107-01	Steel paint coat G-2 bottom flange @ 3 meters from end bearing	33.29	11.23	55.48	**ND**	NA	**ND**	NA	**Negat.**
02	04-04-107-02	Steel paint coat G-3 bottom flange @ 3 meters from end bearing	34.56	11.73	53.71	**ND**	NA	**ND**	NA	**Negat.**
03	04-04-107-03	Steel paint coat G-4 web @ 4 meters from end bearing	30.54	7.76	61.70	**ND**	NA	**ND**	NA	**Negat.**

E. Sioukri

ANALYST
E. Sioukri

LABORATORY DIRECTOR
Spiro Dongaris

LABORATORY CERTIFICATION NUMBERS: NVLAP 101958, ELAP 10955

- Athenica Environmental Services Inc. (AES), is responsible only for information pertaining to samples taken by its employees.
- Samples will be stored for sixty (60) days. AES Inc., should be notified within this time frame for a true duplicate analysis.
- The report relates only to items tested. This report must not be used to claim product endorsement by NVLAP or any other agency of the U.S. Government. Test reports may not be reproduced except in full and with prior approval of AES Inc.
- The liability of Athenica Environmental Services Inc. with respect to the services charged, shall in no event exceed the amount of the invoice.

ATHENICA
ENVIRONMENTAL SERVICES INC.
45-09 GREENPOINT AVENUE
LONG ISLAND CITY, NY 11104
Tel. (718) 784-7490
Fax. (718) 784-4085

PROJECT NO. (ATHENICA FILE#) C003314 DATE 4/16/2004

METHOD OF SHIPMENT U.S. MAIL INSPECTOR K. WAY

NUMBER OF SAMPLES 3 TYPE OF ANALYSIS REQUESTED ☐ PLM ☒ NOB-PLM ☒ NOB-TEM ☐ OTHERS

TURNAROUND TIME ☐ 6 HRS ☐ 12 HRS ☐ 24 HRS ☒ OTHER HRS

COMMENTS ATT: CHRISTOPHER ANDERSON
333 E. WASHINGTON ST. SYRACUSE, N.Y. 13202

HOM. AREA	SAMLPLE #	SAMPLE DESCRIPTION	SAMPLE LOCATION	FIELD COMMENTS	LABORATORY RESULTS		
					PLM	PLM-NOB	TEM-NOB
	01	STEEL PAINT COAT	G-2 BOTTOM FLANGE	@3 METERS FROM END BEARINGS			
	02	"	G-3 BOTTOM FLANGE	" " "			
	03	"	G-4 WEB	@4METERS FROM END BEARINGS			

TRANSMITTAL OF RESULTS :
☒ STANDARD
☐ TELEPHONE RESULTS TO
☐ FAX RESULTS TO

TELEPHONE # : (315) 428-4628
FAX # :

BATCH # : 04-04-107

CHAIN OF CUSTODY RECORD

RELINQUISHED BY :	KEITH WAY	DATE :	4/16/2004	TIME :	10:00 AM
RECEIVED BY :	NEWNAM do G	DATE :	4/22/2004	TIME :	
ANALYST :		DATE :	4/29/2004	TIME :	

LABORATORY ACCREDITATION :
NVLAP# 101958 ELAP# 10955

NEW YORK STATE
DEPARTMENT OF TRANSPORTATION
D031085 P.I.N 3501.60

LEVEL 1 LOAD RATING
B.I.N. 1069131
I-481 SB OVER QUARRY ROAD

LOAD RATING SUMMARY TABLE (LOAD FACTOR)					
CONTROLLING MEMBER	CONTROLLING PARAMETER	LIVE LOAD	LIVE LOAD TYPE	INVENTORY RATING	OPERATING RATING
(G2) INTERIOR GIRDER	SERVICE	HS20-44	Axle Load	HS 34.1 (61.4 TONS)	HS 57.0 (102.6 TONS)
(G2) INTERIOR GIRDER	SERVICE	ALTERNATE MILITARY LOADING	Axle Load	2.250 (53.9 TONS)	3.757 (90.1 TONS)

DOES NOT INCLUDE FUTURE WEARING COURSE

ANALYSIS METHOD:LOAD FACTOR

RECOMMENDED POSTING AS-IS CONDITION: _____ Tons __X__ None

CALCULATED BY:



DATE: 4-7-2014

QUALITY ASSURANCE BY:



DATE: 4-7-2014

C&S COMPANIES

499 Col. Eileen Collins Blvd.
Syracuse, NY 13212
phone 315-455-2000
fax 315-455-9667
www.cscos.com

ENGINEERS
DESIGN BUILD
TECHNICAL RESOURCES
OPERATIONS

C&S Companies

C&S Engineers, Inc.
Syracuse Hancock International Airport
Syracuse, NY 13212
phone 315-455-2000
fax 315-455-9667
www.cscos.com

TECHNICAL MEMORANDUM

TO: FILE (190.514.001)

FROM: JESSICA S. BAUER, P.E.
NYSPE 084915

DATE: FEBRUARY 24, 2014

C&S PROJECT NO.: 190.514.001

RE: SEISMIC ASSESSMENT SUMMARY
NEW YORK STATE DEPARTMENT OF TRANSPORTATION
D031085; PIN 3501.60; I-81

BIN: 1069131 Seismic Assessment

This memorandum summarizes the seismic assessment conducted for BIN 1069131 as part of the Interstate 81 Project in Syracuse, NY. The purpose of the assessment is to determine if seismic retrofits are warranted at the superstructure to substructure connection, and if further seismic evaluation of the structure is required. This memorandum will give the assessment results, retrofits required and recommendations for further seismic evaluation of the structure.

ASSESSMENT PROCEDURE

The seismic assessment was performed in accordance with the FHWA Seismic Retrofitting Manual for Highway Structures: Part 1 - Bridges, January 2006. As per the referenced manual, seismic assessment was performed for both lower level and upper level earthquake ground motion. The lower level earthquake ground motion has a reasonable likelihood of occurrence within the life of the bridge (50% probability of exceedance within a 75 year bridge life). The upper level earthquake ground motion has a finite likelihood of occurrence within the life of the bridge (7% probability of exceedance within a 75 year bridge life).

Values for the spectral acceleration for the Syracuse area used in the assessment are as follows:

- Lower Level Earthquake Ground Motion for a Short Period (0.2 seconds): $S_S = 0.0251$
- Lower Level Earthquake Ground Motion for a Long Period (1.0 seconds): $S_1 = 0.0076$
- Upper Level Earthquake Ground Motion for a Short Period (0.2 seconds): $S_S = 0.139$
- Upper Level Earthquake Ground Motion for a Long Period (1.0 seconds): $S_1 = 0.047$

These values are considered constant and are the same for all seismic assessments of bridges in the Syracuse area.

The Site Class is based on the soil conditions at the bridge location. It was determined that this parameter has little effect on the results of the seismic assessment because the spectral

You created this PDF from an application that is not licensed to print to novaPDF printer (http://www.novapdf.com)

acceleration values for the Syracuse area are small. Based on this, a site class of D was used for all seismic assessments of bridges in the Syracuse area.

Bridge parameters used in the seismic assessment were retrieved from the record drawings and WinBolts data.

The seismic assessment takes into account the anticipated service life, importance, and the seismic exposure of the bridge to determine a seismic retrofit category (SRC). The SRC is then used to determine seismic evaluation methods and retrofit measures. There are four SRCs, A through D. Seismic retrofit category A is the lowest category; bridges in this category do not require retrofits or further seismic evaluation. Seismic retrofit category D is the highest category; bridges in this category requiring the most rigorous seismic evaluations and retrofits.

ASSESSMENT RESULTS
The SRC for the bridge is "**C**" for lower level earthquake ground motion and "**B**" for upper level earthquake ground motion.

RETROFITS REQUIRED
Bearing replacements and seat width improvements are not required at the abutments. Additional retrofits may be required if further seismic evaluation is needed.

RECOMMENDATIONS FOR FURTHER SEISMIC EVALUATION
No further seismic evaluation is required for lower level earthquake ground motion. For the upper level earthquake ground motion, it is recommended that the capacities of the bearings are checked as per Section 5.2 of the referenced manual.

Retrofit cost estimates will be provided after any further required seismic evaluations are completed.

You created this PDF from an application that is not licensed to print to novaPDF printer (http://www.novapdf.com)

E. Recommendations:

The purpose of this deck evaluation is to document and determine existing conditions of the deck. It will be used as a tool for developing the scope of work and cost estimates for the development and comparison of alternatives for the overall project.

There are no delaminated areas on the deck and Begin approach slab. However, the total delaminated area of the End approach slab is 3.13% of the total End approach slab area. Due to the age, condition and chloride-ion content of the bridge deck concrete, the bridge deck should be rehabilitated or replaced to meet current design standards and to mitigate excessive future maintenance costs.

Option 1 – Scarify and Bridge Deck Overlay

The maximum service life this option would provide is 25 years. The design life of this project is 30 years (ETC + 30). This option does not meet the project objective of obtaining 30+ years of service life.

Option 2 – Bridge Deck Rehabilitation with 100% Deep Removal

This option will involve partial depth reconstruction by exposing the top mat of rebar over the entire bridge deck to remove the chloride contaminated concrete (100% deep removal). The existing bridge deck thickness is 9 ¼" with 3 ¼ " of concrete cover over the top mat of reinforcing. The proposed partial depth reconstruction will include the addition of ¼" of concrete to provide the standard 9 ½" bridge deck thickness. The existing top mat of reinforcing bars will be removed and replaced to accommodate the standard 3" concrete cover. The existing non-conforming bridge railing will be removed and replaced with single-slope concrete barrier. The existing approach slabs will receive the same repair treatment as the deck. The existing original armor bridge joints will be replaced with armorless bridge joints. The Level 1 Load rating for the final condition was

found to be acceptable. This option would provide a service life of 35 years to the bridge deck. The construction cost of this option is $ 0.423 million.

Option 3 – Bridge Deck Replacement with Cast-In-Place Concrete

This option would involve the complete removal of the existing bridge deck, railing, bridge deck joints, and approach slabs. The bridge deck would be replaced with updated single-slope concrete barrier, new approach slabs and new armorless bridge joints. The new bridge deck would be 9 ½" standard thickness as compared to the 9 ¼" existing thickness. The Level 1 Load Rating for the final condition was found to be acceptable. This option would provide a service life of 40 years to the bridge deck. The construction cost of this option is $ 0.580 million.

Option 4 – Bridge Deck Replacement with Pre-cast Concrete Deck Panels

This option will have the highest construction cost of all the options; however, traffic control costs may be lower due to the reduced construction time. Comparison of accelerated construction versus conventional construction is beyond the scope of work for this project at this time.

IN-DEPTH INSPECTION REPORT

D031085 P.I.N. 3501.60

B.I.N. 1069132

TEAM LEADER	Andrew J. Fuller, P.E.	59848
		NYSPE LICENSE #

ASSISTANT TEAM LEADER	Jeffrey M. Reina, P.E.
ASSISTANT TEAM LEADER	Logan Bessel
ASSISTANT TEAM LEADER	Jerome Getter

FEATURE CARRIED	I - 481 Northbound
FEATURE CROSSED	Driveway to Quarry Road

DATE FIELD WORK BEGAN	December 20, 2013
DATE FIELD WORK COMPLETED	December 20, 2013

TABLE OF CONTENTS

- TP 349 & 350
- IN-DEPTH CONDITION DOCUMENTATION
- IN-DEPTH PHOTO DOCUMENTATION
- ASBESTOS REPORT

TP 349 & TP 350

BRIDGE ELEMENT RATINGS

Inspection Date: 3/26/2012 RC: 33 BIN: 1069132

Bridge Ratings

Carried: 481I 481I33012010 Crossed: DRIVWY TO QUARRY CheckValue: 1,795,103,878

Inspection Agency: 10 - NYSDOT Type of Inspection: 1 - BIENNIAL
GTMS: 302 -- Steel - Stringer/Multi-Beam or Girder
POSTINGS: See Gen Rec Page 1 for Postings at time of inspection.
Further Investigation Needed: No
State Highway Number: 76-2 Milepoint: 3.32 AADT/Yr: 14998 / 2010
Orientation: 3 - East Political Unit: 0233 - Town of DEWITT Year Built: 1980
Total Spans: 1 Ramp Bridge Attached To Span: NA BIN: NA
General Recommendation: 5 Computed Condition Rating: 5.188

Abutment Ratings:	**Beg Abut**	**End Abut**
Joint with Deck	5	5
Bearings, Bolts, Pads	5	5
Seats and Pedestals	6	6
Backwall	5	5
Stem (Breastwall)	6	5
Erosion or Scour	5	5
Footings	9	9
Piles	8	8
Recommendation	5	5

Wingwall Ratings:	**Beg Abut**	**End Abut**
Walls	5	4
Footings	9	9
Erosion or Scour	6	6
Piles	8	8

Channel Ratings:	**Channel**
Stream Alignment	8
Erosion and Scour	8
Waterway Opening	8
Bank Protection	8

Approach Ratings:	**Approaches**
Drainage	4
Embankment	5
Settlement	4
Erosion	5
Pavement	3
Guide Railing	5

Number of Flags Issued:

RED: 0 Yellow: 0 Safety: 0

Vulnerability Reviews Recommended: 1=Yes, 2=No, 3=NA, X=NotActive

Hydraulic: 3	Overload: X	Steel: 2
Collision: 2	Concrete: X	Seismic: X

Inspector's Signature: CheckValue: 1,795,103,878 Date: 3/26/2012

David Hann,PE () (Inspector ID:3000055)

Signed copy of this inspection report is available in the appropriate NYSDOT Regional Office

Reviewed By: Date: 5/7/2012

James R. Manning,PE () (QC ID:3000023)

Signed copy of this inspection report is available in the appropriate NYSDOT Regional Office

Inspection Date: 3/26/2012 RC: 33 BIN: 1069132

Span Ratings

Carried: 481I 481I33012010 Crossed: DRIVWY TO QUARRY CheckValue: 1,795,103,878

Deck Element Ratings:	**001**
Wearing Surface	4
Curbs	5
Sidewalks, Fascias	5
Railings, Parapets	5
Scuppers	8
Gratings	8
Median	8
Mono Deck Surface	5

Superstructure Ratings:	**001**
Structural Deck	5
Primary Members	6
Secondary Members	6
Paint	4
Joints	8
Recommendation	6

Pier Ratings:	**001**
Bearings, Bolts, Pads	8
Pedestals	8
Top of Cap or Beam	8
Stem Solid Pier	8
Cap Beam	8
Pier Columns	8
Footings	8
Erosion or Scour	8
Piles	8
Recommendation	8

Utility Ratings:	**001**
Lighting	8
Sign Structure	6
Utilities and Support	8

Field Notes:

Field Date	Arrival	Departure	Temp (C)	Temp (F)	Weather Conditions
3/26/2012	1:00:00 PM	5:00:00 PM		40	Sunny

IN-DEPTH CONDITION DOCUMENTATION

BIN 1069132

Visual Inspection

Miscellaneous concrete repairs were made to the abutments in 2002 under contract D259214. Deck joints were also replaced and the bearings were restored under this contract.

Cracks, spalls, and other field observations are shown on the plans. Below is a brief summary of conditions for each feature.

Superstructure

Deck – See Bridge Deck Evaluation Report

Steel – See Structural Steel Inspection Summary

Bearings – Bearing elements typically have minor rust scale.

Substructure

West Abutment – Concrete backwall contained minor isolated areas of delaminated concrete and cracking and had heavy rust staining. The stem contained minor cracks and delaminated concrete near pedestals 8, 9, 10, 11, and 12. The pedestal concrete did not appear to be delaminated. The left cheek wall exhibited map cracking the full height.

East Abutment – Concrete backwall contained minor isolated areas of delaminated concrete and cracking and had heavy rust staining. The stem contained minor cracks and delaminated concrete near pedestals 8, 11, and 12. The pedestal concrete did not appear to be delaminated.

STRUCTURAL STEEL INSPECTION SUMMARY

BIN 1069132

Special Emphasis Inspection Required

Non-Redundant/Fracture Critical Members – No

Pin and Hangers – No

Fatigue-Prone Welds – No

Non-Categorized Fatigue-Prone Details – No

Other (Specified in Text) – No

Special Emphasis Details

No Special emphasis details.

Overall Steel Condition

The steel showed no sign of major deterioration. There were no isolated pockets of major section loss and no areas of concern were observed.

Paint

The paint system was deteriorated along flanges of girders and webs of fascia girders.

Section Loss

Due to the age of the steel a blanket 5% section loss should be used in load rating.

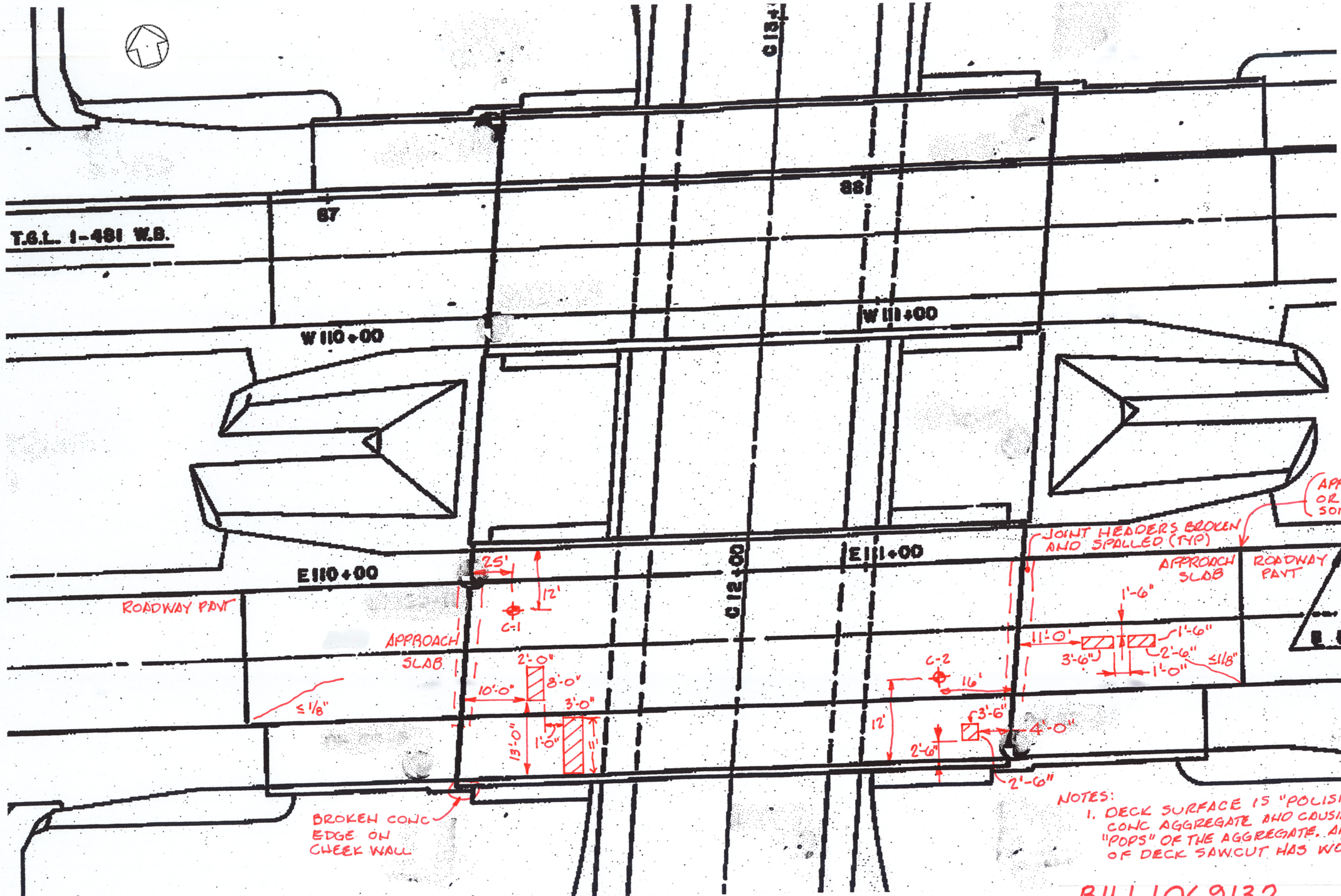

LEGEND

- C-X — CORE LOCATION
- XX — PHOTO LOCATION
- DELAMINATION
- SPALLING
- CRACK
- MAP CRACKING
- MOISTURE

APPROACH SLABS ARE CHIPPED OR BROKEN AT JOINT LINES. SOME SPALL PRESENT.

NOTES:
1. DECK SURFACE IS "POLISHED" EXPOSING CONC AGGREGATE AND CAUSING SURFACE "POPS" OR THE AGGREGATE. APPROX 50% OF DECK SAWCUT HAS WORN DOWN.

FASCIA TOP SURFACE AT RAILING ARE MAP CRACKED AND STARTING TO SPALL. FACE OF FASCIA IS CRACKING AND BEGINNINING TO SPALL. TYPICAL FOR EACH SIDE.

BIN 1069132
I-481 NB OVER QUARRY RD

38'-9"

PLAN

H.C.L. & T.G.L. I-481 Eastbound

8-5ABVI7 @12" F.F.

MAP CRACK CHEEK WALL FULL HEIGHT

43-5ABVI @ 12" F.F. & 22-5ABVI @ 24" N.F.

44-5ABV2 @12" F.F.

El.577.04 El.576.48 El.577.26 El.577.15 El.577.68

G12 G11 G10 G9 G8 G7

2-5APSI (Typ. except as noted)

1-5AHHI

El.576.70

5AWV12

PACK RUST

NUT ON ANCHOR BOLT NOT SEATED

RUST STAINS ON BACKWALL FULL LENGTH

MINOR RUST ON BEARING

MINOR RUST ON BEARING

B El.576.06

5AWV4

El.570.97

5AWV7

9"

1'-0"

1'-6"

1'-9" 6'-6" 1'-6" 2'-6" 1'-6" 2'-4" 2'-0" 1'-0" 2'-6" 2'-0"

15H5 @12" N.F.

13 @ 18" F.F.

Contraction

14-5A9H6

C

C

1'-0" FULL HEIGHT

derdrain

702

Finished Grade

43-7AFV3 @12" F.F.

El.554.0

Approximate Existing Ground

Inv. El. 557.5

Inv. El. 557.5

CONST JT

ELEVATION

LEGEND

- C-X — CORE LOCATION
- XX — PHOTO LOCATION
- DELAMINATION
- SPALLING
- CRACK
- MAP CRACKING
- MOISTURE
- G - X — GIRDER NO. X

BIN 1069132

I481 NB. OVER QUARRY ROAD

WEST ABUTMENT

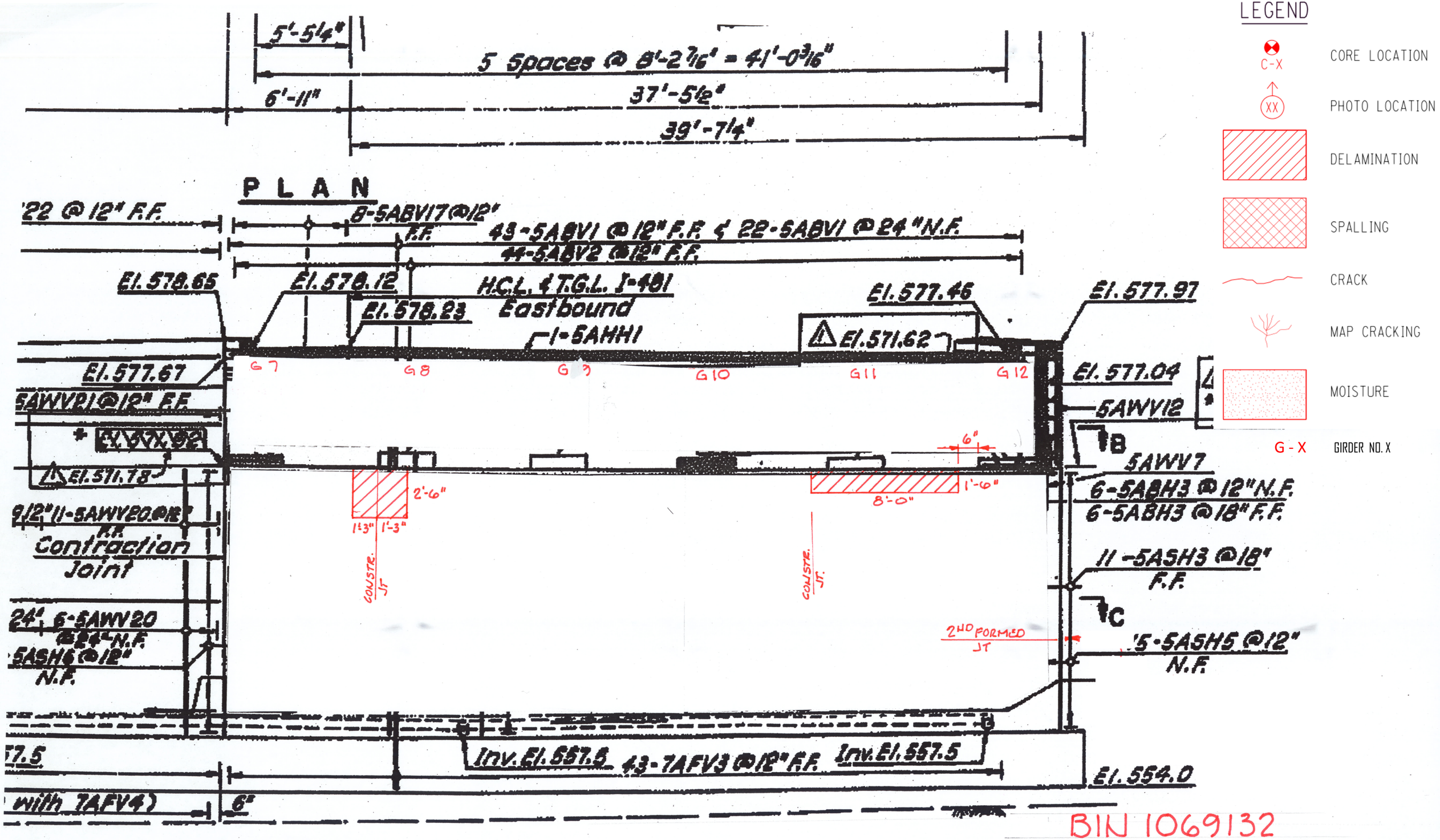

ELEVATION

LEGEND

- C-X — CORE LOCATION
- XX — PHOTO LOCATION
- DELAMINATION
- SPALLING
- CRACK
- MAP CRACKING
- MOISTURE
- G - X — GIRDER NO. X

BIN 1069132
I481 NB OVER QUARRY RD
EAST ABUTMENT

LEGEND

- C-X — CORE LOCATION
- XX — PHOTO LOCATION
- DELAMINATION
- SPALLING
- CRACK
- MAP CRACKING
- MOISTURE

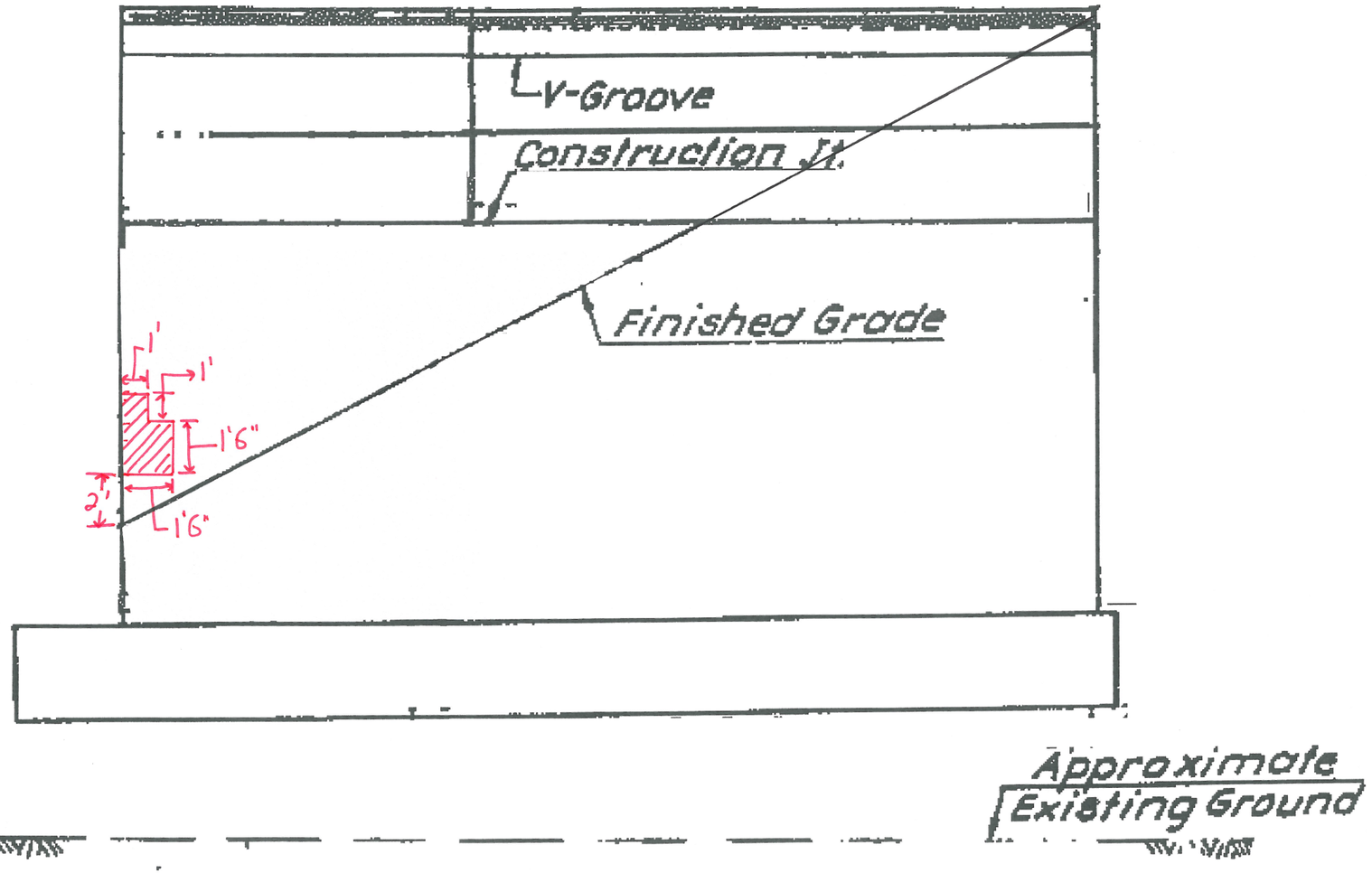

WINGWALL ELEVATION

BIN 1069132
EAST ABUTMENT
WINGWALL

IN-DEPTH PHOTO DOCUMENTATION

C&S Engineers, Inc.
499 Col. Eileen Collins Blvd.
Syracuse, New York 13212
Phone: (315) 455-2000
Fax: (315) 455-9667
www.cscos.com

I-481 Eastbound over Driveway to Quarry Road



DESCRIPTION: WEST ABUTMENT – LEFT CHEECKWALL – MAP CRACK FULL HEIGHT

PHOTO 1



DESCRIPTION: WEST ABUTMENT – BACKWALL – BETWEEN PEDESTALS 10 AND 11 – RUST STAINS (TYPICAL)

PHOTO 2

C&S Engineers, Inc.
499 Col. Eileen Collins Blvd.
Syracuse, New York 13212
Phone: (315) 455-2000
Fax: (315) 455-9667
www.cscos.com

I-481 Eastbound over Driveway to Quarry Road



DESCRIPTION: WEST ABUTMENT – STEM – BETWEEN PEDESTALS 10 AND 12 – DELAMINATED COCNRETE

PHOTO 3



DESCRIPTION: WEST ABUTMENT – STEM – BETWEEN PEDESTALS 9 AND 10 – DELAMINATED CONCRETE

PHOTO 4

C&S Engineers, Inc.
499 Col. Eileen Collins Blvd.
Syracuse, New York 13212
Phone: (315) 455-2000
Fax: (315) 455-9667
www.cscos.com

I-481 Eastbound over Driveway to Quarry Road



DESCRIPTION: WEST ABUTMENT – STEM – BELOW PEDESTALS 8 – DELAMINATED CONCRETE

PHOTO 5



DESCRIPTION: WEST ABUTMENT – PEDESTAL 9 – TYPICAL CONCRETE

PHOTO 6

C&S Engineers, Inc.
499 Col. Eileen Collins Blvd.
Syracuse, New York 13212
Phone: (315) 455-2000
Fax: (315) 455-9667
www.cscos.com

I-481 Eastbound over Driveway to Quarry Road



DESCRIPTION: WEST ABUTMENT – BEARING 9 - TYPICAL

PHOTO 7



DESCRIPTION: WEST ABUTMENT – BEARING 7 – MINOR RUST

PHOTO 8

C&S Engineers, Inc.
499 Col. Eileen Collins Blvd.
Syracuse, New York 13212
Phone: (315) 455-2000
Fax: (315) 455-9667
www.cscos.com

I-481 Eastbound over Driveway to Quarry Road



DESCRIPTION: SOUTHWEST WINGWALL – FACING NORTHWEST

PHOTO 9



DESCRIPTION: NORTHWEST WALL – FACING WEST

PHOTO 10

C&S Engineers, Inc.
499 Col. Eileen Collins Blvd.
Syracuse, New York 13212
Phone: (315) 455-2000
Fax: (315) 455-9667
www.cscos.com

I-481 Eastbound over Driveway to Quarry Road



DESCRIPTION: DECK UNDERSIDE – GENERAL – FACING EAST

PHOTO 11



DESCRIPTION: EAST ABUTMENT – STEM – BELOW PEDESTAL 8 – DELAMINATED CONCRETE

PHOTO 12

C&S Engineers, Inc.
499 Col. Eileen Collins Blvd.
Syracuse, New York 13212
Phone: (315) 455-2000
Fax: (315) 455-9667
www.cscos.com

I-481 Eastbound over Driveway to Quarry Road



DESCRIPTION: EAST ABUTMENT – BELOW PEDESTAL 11 – DELAMINATED CONCRETE

PHOTO 13



DESCRIPTION: EAST ABUTMENT – PEDESTAL 10 – CONCRETE (TYPICAL)

PHOTO 14

C&S Engineers, Inc.
499 Col. Eileen Collins Blvd.
Syracuse, New York 13212
Phone: (315) 455-2000
Fax: (315) 455-9667
www.cscos.com

I-481 Eastbound over Driveway to Quarry Road



DESCRIPTION: EAST ABUTMENT – BEARING 8 – TYPICAL RUST

PHOTO 15



DESCRIPTION: SOUTHEAST WINGWALL – FACING NORTH EAST

PHOTO 16

C&S Engineers, Inc.
499 Col. Eileen Collins Blvd.
Syracuse, New York 13212
Phone: (315) 455-2000
Fax: (315) 455-9667
www.cscos.com

I-481 Eastbound over Driveway to Quarry Road



DESCRIPTION: NORTHEAST WALL – FACING EAST

PHOTO 17



DESCRIPTION: BRIDGE DECK – END APPRAOCH FACING WEST

PHOTO 18

C&S Engineers, Inc.
499 Col. Eileen Collins Blvd.
Syracuse, New York 13212
Phone: (315) 455-2000
Fax: (315) 455-9667
www.cscos.com

I-481 Eastbound over Driveway to Quarry Road



DESCRIPTION: WEST ABUTMENT – FACING WEST

PHOTO 19



DESCRIPTION: EAST ABUTMENT – FACING EAST

PHOTO 20

C&S Engineers, Inc.
499 Col. Eileen Collins Blvd.
Syracuse, New York 13212
Phone: (315) 455-2000
Fax: (315) 455-9667
www.cscos.com

I-481 Eastbound over Driveway to Quarry Road



DESCRIPTION: GENERAL ELEVATION – FACING NORTH

PHOTO 21

DESCRIPTION:

PHOTO

1069132
Photo Log Map

LEGEND

XX — PHOTO LOCATION

XX — HIDDEN PHOTO LOCATION

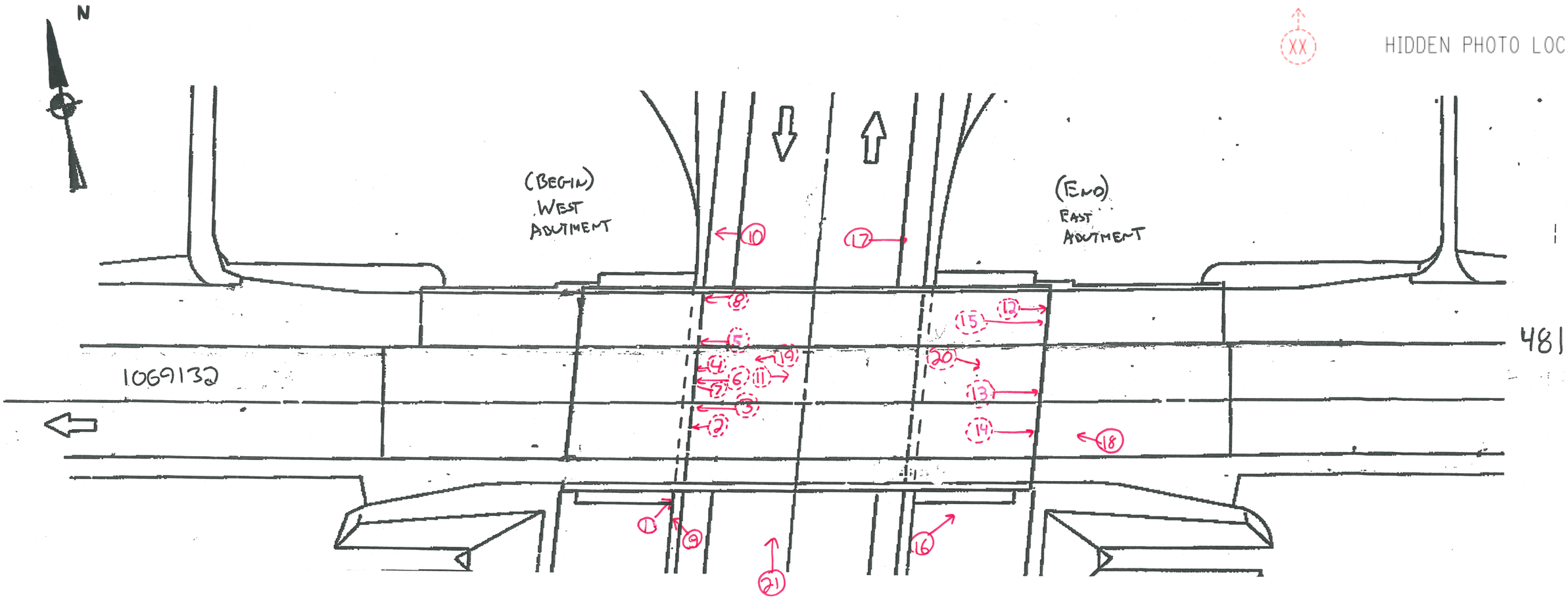

ASBESTOS DOCUMENTATION

ASBESTOS DOCUMENTATION FROM WATTS ARCHITECTURE & ENGINEERING, INC.

(WILL REPLACE BIN FOLDER ASBESTOS REPORT UPON COMPLETION)

ATHENICA
ENVIRONMENTAL SERVICES INC.
Tel (718) 784-7490
Fax (718) 784-4085

BULK (NOB) ASBESTOS ANALYSIS BY POLARIZED LIGHT MICROSCOPY AND TRANSMISSION ELECTRON MICROSCOPY

3

CLIENT: NYS DOT, Region 3
LABORATORY ID #: 04-04-106
DATES OF ANALYSIS: 04/29/04

PROJECT: Bin # 1069132
ANALYT. METHODOLOGIES: ELAP 198.1, ELAP 198.4
DATE OF REPORT: 04/30/04

LABORATORY RESULTS

CLIENT #	LAB. ID #	LOCATION	%ORG	%ASI	%AII	PLM RESULTS	TYPE OF ASBEST.	TEM RESULTS	TYPE OF ASBEST.	POSIT. / NEGAT.
01	04-04-106-01	Steel paint coat G-5 wed @ 3 meters form end bearing	41.52	3.95	54.53	**ND**	NA	**ND**	NA	**Negat.**
02	04-04-106-02	Steel paint coat G-3 bottom flange @ 5 meters from end bearing	48.27	1.79	49.94	**ND**	NA	**ND**	NA	**Negat.**
03	04-04-106-03	Steel paint coat G-6 bottom flange @ 3 meters form end bearing	36.04	17.11	46.84	**ND**	NA	**ND**	NA	**Negat.**

E. Sioukri

ANALYST
E. Sioukri

LABORATORY DIRECTOR
Spiro Dongaris

LABORATORY CERTIFICATION NUMBERS: NVLAP 101958, ELAP 10955

- Athenica Environmental Services Inc. (AES), is responsible only for information pertaining to samples taken by its employees.
- Samples will be stored for sixty (60) days. AES Inc., should be notified within this time frame for a true duplicate analysis.
- The report relates only to items tested. This report must not be used to claim product endorsement by NVLAP or any other agency of the U.S. Government. Test reports may not be reproduced except in full and with prior approval of AES Inc.
- The liability of Athenica Environmental Services Inc. with respect to the services charged, shall in no event exceed the amount of the invoice.

ATHENICA
ENVIRONMENTAL SERVICES INC.
45-09 GREENPOINT AVENUE
LONG ISLAND CITY, NY 11104
Tel. (718) 784-7490
Fax. (718) 784-4085

PROJECT NO. (ATHENICA FILE#) C003314 DATE 4/16/2004 106 9132

METHOD OF SHIPMENT U.S. MAIL INSPECTOR B. WAY

NUMBER OF SAMPLES 3 TYPE OF ANALYSIS REQUESTED ☐ PLM ☒ NOB-PLM ☒ NOB-TEM ☐ OTHERS

TURNAROUND TIME ☐ 6 HRS ☐ 12 HRS ☐ 24 HRS ☒ OTHER HRS

COMMENTS ATT: CHRISTOPHER ANDERSON
333 E. WASHINGTON ST. SYRACUSE, N.Y. 13202

HOM. AREA	SAMLPLE #	SAMPLE DESCRIPTION	SAMPLE LOCATION	FIELD COMMENTS	LABORATORY RESULTS		
					PLM	PLM-NOB	TEM-NOB
	01	STEEL PAINT COAT	G-5 WEB	@ 3METERS FROM END BEAR			
	02	"	G-3 BOTTOM FLANGE	@ 5METERS FROM END BEAR			
	03	"	G-6 BOTTOM FLANGE	@ 3METER FROM END BEARING			

TRANSMITTAL OF RESULTS :
☒ STANDARD
☐ TELEPHONE RESULTS TO
☐ FAX RESULTS TO

TELEPHONE # : (315) 428-4628
FAX # :

BATCH # : 04-04-106

CHAIN OF CUSTODY RECORD

RELINQUISHED BY :	Kurt Way	DATE :	4/16/2004	TIME :	10:00 AM
RECEIVED BY :	NWA/CO	DATE :	4/22/2004	TIME :	
ANALYST :	E Stalker	DATE :	4/29/2004	TIME :	

LABORATORY ACCREDITATION :
NVLAP# 101958 ELAP# 10955

NEW YORK STATE
DEPARTMENT OF TRANSPORTATION
D031085 P.I.N 3501.60

LEVEL 1 LOAD RATING
B.I.N. 1069132
I-481 NB OVER QUARRY ROAD

LOAD RATING SUMMARY TABLE (LOAD FACTOR)					
CONTROLLING MEMBER	CONTROLLING PARAMETER	LIVE LOAD	LIVE LOAD TYPE	INVENTORY RATING	OPERATING RATING
(G8) INTERIOR GIRDER	SERVICE	HS20-44	Axle Load	HS 34.1 (61.4 TONS)	HS 57.0 (102.6 TONS)
(G8) INTERIOR GIRDER	SERVICE	ALTERNATE MILITARY LOADING	Axle Load	2.250 (53.9 TONS)	3.757 (90.1 TONS)

DOES NOT INCLUDE FUTURE WEARING COURSE

ANALYSIS METHOD:LOAD FACTOR

RECOMMENDED POSTING AS-IS CONDITION: _____ Tons __X__ None

CALCULATED BY:

STATE OF NEW YORK JEFFREY M. REINA No. 081990 LICENSED PROFESSIONAL ENGINEER

DATE: 4-7-2014

QUALITY ASSURANCE BY:

STATE OF NEW YORK CHARLES F. STANTON IV 077396 LICENSED PROFESSIONAL ENGINEER

DATE: 4-7-2014

C&S COMPANIES

499 Col. Eileen Collins Blvd.
Syracuse, NY 13212
phone 315-455-2000
fax 315-455-9667
www.cscos.com

ENGINEERS
DESIGN BUILD
TECHNICAL RESOURCES
OPERATIONS

C&S Companies

C&S Engineers, Inc.
Syracuse Hancock International Airport
Syracuse, NY 13212
phone 315-455-2000
fax 315-455-9667
www.cscos.com

TECHNICAL MEMORANDUM

TO: FILE (190.514.001)

FROM: JESSICA S. BAUER, P.E.
NYSPE 084915

DATE: FEBRUARY 24, 2014

C&S PROJECT NO.: 190.514.001

RE: SEISMIC ASSESSMENT SUMMARY
NEW YORK STATE DEPARTMENT OF TRANSPORTATION
D031085; PIN 3501.60; I-81

BIN: 1069132 Seismic Assessment

This memorandum summarizes the seismic assessment conducted for BIN 1069132 as part of the Interstate 81 Project in Syracuse, NY. The purpose of the assessment is to determine if seismic retrofits are warranted at the superstructure to substructure connection, and if further seismic evaluation of the structure is required. This memorandum will give the assessment results, retrofits required and recommendations for further seismic evaluation of the structure.

ASSESSMENT PROCEDURE

The seismic assessment was performed in accordance with the FHWA Seismic Retrofitting Manual for Highway Structures: Part 1 - Bridges, January 2006. As per the referenced manual, seismic assessment was performed for both lower level and upper level earthquake ground motion. The lower level earthquake ground motion has a reasonable likelihood of occurrence within the life of the bridge (50% probability of exceedance within a 75 year bridge life). The upper level earthquake ground motion has a finite likelihood of occurrence within the life of the bridge (7% probability of exceedance within a 75 year bridge life).

Values for the spectral acceleration for the Syracuse area used in the assessment are as follows:

- Lower Level Earthquake Ground Motion for a Short Period (0.2 seconds): $S_S = 0.0251$
- Lower Level Earthquake Ground Motion for a Long Period (1.0 seconds): $S_1 = 0.0076$
- Upper Level Earthquake Ground Motion for a Short Period (0.2 seconds): $S_S = 0.139$
- Upper Level Earthquake Ground Motion for a Long Period (1.0 seconds): $S_1 = 0.047$

These values are considered constant and are the same for all seismic assessments of bridges in the Syracuse area.

The Site Class is based on the soil conditions at the bridge location. It was determined that this parameter has little effect on the results of the seismic assessment because the spectral

You created this PDF from an application that is not licensed to print to novaPDF printer (http://www.novapdf.com)

acceleration values for the Syracuse area are small. Based on this, a site class of D was used for all seismic assessments of bridges in the Syracuse area.

Bridge parameters used in the seismic assessment were retrieved from the record drawings and WinBolts data.

The seismic assessment takes into account the anticipated service life, importance, and the seismic exposure of the bridge to determine a seismic retrofit category (SRC). The SRC is then used to determine seismic evaluation methods and retrofit measures. There are four SRCs, A through D. Seismic retrofit category A is the lowest category; bridges in this category do not require retrofits or further seismic evaluation. Seismic retrofit category D is the highest category; bridges in this category requiring the most rigorous seismic evaluations and retrofits.

ASSESSMENT RESULTS
The SRC for the bridge is "**C**" for lower level earthquake ground motion and "**B**" for upper level earthquake ground motion.

RETROFITS REQUIRED
Bearing replacements and seat width improvements are not required at the abutments. Additional retrofits may be required if further seismic evaluation is needed.

RECOMMENDATIONS FOR FURTHER SEISMIC EVALUATION
No further seismic evaluation is required for lower level earthquake ground motion. For the upper level earthquake ground motion, it is recommended that the capacities of the bearings are checked as per Section 5.2 of the referenced manual.

Retrofit cost estimates will be provided after any further required seismic evaluations are completed.

You created this PDF from an application that is not licensed to print to novaPDF printer (http://www.novapdf.com)

E. Recommendations:

The purpose of this deck evaluation is to document and determine existing conditions of the deck. It will be used as a tool for developing the scope of work and cost estimates for the development and comparison of alternatives for the overall project.

There are no delaminated areas on the Begin approach slab, three delaminated areas on the deck and two delaminated areas on the End approach slab. The total delaminated area of the bridge deck is 1.41 % of the total deck area and the total delaminated area of the End approach slab is less than 1% of the total End approach slab area. Due to the age, condition and chloride-ion content of the bridge deck concrete in the 1" and 2" depths, the bridge deck should be rehabilitated or replaced to meet current design standards and to mitigate excessive future maintenance costs.

Option 1 – Scarify and Bridge Deck Overlay
The maximum service life this option would provide is 25 years. The design life of this project is 30 years (ETC + 30). This option does not meet the project objective of obtaining 30+ years of service life.

Option 2 – Bridge Deck Rehabilitation with 100% Deep Removal
This option will involve partial depth reconstruction by exposing the top mat of rebar over the entire bridge deck to remove the chloride contaminated concrete (100% deep removal). The existing bridge deck thickness is 9 ¼" with 3 ¼" of concrete cover over the top mat of reinforcing. The proposed partial depth reconstruction will include the addition of ¼" of concrete to provide the standard 9 ½" bridge deck thickness. The existing top mat of reinforcing bars will be removed and replaced to accommodate the standard 3" concrete cover. The existing non-conforming bridge railing will be removed and replaced with single-slope concrete barrier. The existing approach slabs will receive the same repair

treatment as the deck. The existing original armor bridge joints will be replaced with armorless bridge joints. The Level 1 Load rating for the final condition was found to be acceptable. This option would provide a service life of 35 years to the bridge deck. The construction cost of this option is $ 0.422 million.

Option 3 – Bridge Deck Replacement with Cast-In-Place Concrete
This option would involve the complete removal of the existing bridge deck, railing, bridge deck joints, and approach slabs. The bridge deck would be replaced with updated single-slope concrete barrier, new approach slabs and new armorless bridge joints. The new bridge deck would be 9 ½" standard thickness as compared to the 9 ¼" existing thickness. The Level 1 Load Rating for the final condition was found to be acceptable. This option would provide a service life of 40 years to the bridge deck. The construction cost of this option is $ 0.580 million.

Option 4 – Bridge Deck Replacement with Pre-cast Concrete Deck Panels
This option will have the highest construction cost of all the options; however, traffic control costs may be lower due to the reduced construction time. Comparison of accelerated construction versus conventional construction is beyond the scope of work for this project at this time.

IN-DEPTH INSPECTION REPORT

D031085 P.I.N. 3501.60

B.I.N. 1069141

TEAM LEADER	Bruce Opalka, P.E.	60413
		NYSPE LICENSE #

ASSISTANT TEAM LEADER	Andrew Fuller, P.E.
ASSISTANT TEAM LEADER	Logan Bessel, EIT
ASSISTANT TEAM LEADER	Michael Rode, EIT

FEATURE CARRIED	I - 481 Southbound
FEATURE CROSSED	NY Susquehanna & W Railroad

DATE FIELD WORK BEGAN	January 27, 2014
DATE FIELD WORK COMPLETED	January 29, 2014

TABLE OF CONTENTS

- TP 349 & 350
- IN-DEPTH CONDITION DOCUMENTATION
- IN-DEPTH PHOTO DOCUMENTATION
- ASBESTOS REPORT

TP 349 & TP 350

BRIDGE ELEMENT RATINGS

Inspection Date: 10/4/2013 RC: 33 BIN: 1069141

Bridge Ratings

Carried: 481I 481I33012015 Crossed: NY SUSQUEHNNA & W CheckValue: 1,818,967,713

Inspection Agency: 10 - NYSDOT Type of Inspection: 1 - BIENNIAL
GTMS: B02 -- Unpainted Steel Continuous - Stringer/Multi-Beam or Girder
POSTINGS: See Gen Rec Page 1 for Postings at time of inspection.
Further Investigation Needed: No
State Highway Number: 76-2 Milepoint: 2.11 AADT/Yr: 14636 / 2010
Orientation: 2 - Northeast Political Unit: 0233 - Town of DEWITT Year Built: 1980
Total Spans: 3 Ramp Bridge Attached To Span: NA BIN: NA
General Recommendation: 6 Computed Condition Rating: 5.125

Abutment Ratings:	**Beg Abut**	**End Abut**
Joint with Deck	5	4
Bearings, Bolts, Pads	6	6
Seats and Pedestals	4	5
Backwall	4	5
Stem (Breastwall)	5	5
Erosion or Scour	6	6
Footings	9	9
Piles	8	8
Recommendation	6	5

Wingwall Ratings:	**Beg Abut**	**End Abut**
Walls	5	5
Footings	9	9
Erosion or Scour	6	6
Piles	8	8

Channel Ratings:	**Channel**
Stream Alignment	8
Erosion and Scour	8
Waterway Opening	8
Bank Protection	8

Approach Ratings:	**Approaches**
Drainage	6
Embankment	6
Settlement	7
Erosion	4
Pavement	7
Guide Railing	6

Number of Flags Issued:

RED: 0 Yellow: 0 Safety: 0

Vulnerability Reviews Recommended: 1=Yes, 2=No, 3=NA, X=NotActive

Hydraulic: 3	Overload: X	Steel: 2
Collision: 2	Concrete: X	Seismic: X

Inspector's Signature: CheckValue: 1,818,967,713 Date: 10/4/2013

David Hann,PE () (Inspector ID:3000055)

Signed copy of this inspection report is available in the appropriate NYSDOT Regional Office

Reviewed By: Date: 11/14/2013

James R. Manning,PE () (QC ID:3000023)

Signed copy of this inspection report is available in the appropriate NYSDOT Regional Office

Inspection Date: 10/4/2013 RC: 33 BIN: 1069141

Span Ratings

Carried: 481I 481I33012015 Crossed: NY SUSQUEHNNA & W CheckValue: 1,818,967,713

Deck Element Ratings:	001	002	003
Wearing Surface	6	6	6
Curbs	6	6	6
Sidewalks, Fascias	4	3	3
Railings, Parapets	6	6	4
Scuppers	8	8	8
Gratings	8	8	8
Median	8	8	8
Mono Deck Surface	6	6	6

Superstructure Ratings:	001	002	003
Structural Deck	5	5	5
Primary Members	6	6	6
Secondary Members	6	6	6
Paint	4	4	4
Joints	8	8	8
Recommendation	6	6	6

Pier Ratings:	001	002	003
Bearings, Bolts, Pads	6	5	8
Pedestals	6	6	8
Top of Cap or Beam	6	6	8
Stem Solid Pier	6	6	8
Cap Beam	6	6	8
Pier Columns	6	6	8
Footings	9	9	8
Erosion or Scour	6	6	8
Piles	8	8	8
Recommendation	6	6	8

Utility Ratings:	001	002	003
Lighting	8	8	8
Sign Structure	8	8	8
Utilities and Support	8	8	8

Field Notes:

Field Date	Arrival	Departure	Temp (C)	Temp (F)	Weather Conditions
10/4/2013	12:30:00 PM	3:30:00 PM		60	Partial sunny

IN-DEPTH CONDITION DOCUMENTATION

IN DEPTH INSPECTION REPORT

BIN 1069141

- **In-Depth Condition:**

Visual Inspection: Miscellaneous concrete repairs were made to the abutments, bearing restoration, guide railing and joint replacement under contract D259214 (10/02).

Cracks, spalls, and other field observations are shown on the plans. Below is a brief summary of conditions for each feature.

Superstructure

- **Deck –** See Bridge Deck Evaluation Report.
- **Steel –** See Structural Steel Inspection Summary.
- **Bearings –** Bearings were restored under contract D259214 (10/02)

- **Substructure**
  - **West Abutment (Begin) –** There are large areas of delaminated concrete along the abutment and backwall. The south wing wall has moderate spalling and a significant vertical crack. With the exception of pedestal 3, pedestals appear in good condition. Pedestal 3 has major cracking and some spalled concrete. The area immediately below pedestal 3 is delaminated.

  - **Pier #1 (west pier) –** The pier, which has no joint in the deck above, is in good condition except for a single 3” by 3” by 2’ deep spall on the front face of pedestal #2 and a single small crack in the end face of pedestal #3. The capbeam and columns soundings are in good condition.

  - **Pier #2 (east pier) –** The pier, which has no joint in the deck above, is in good condition except for minor cracks in the front, right, and end faces of pedestal #5, and a thin hairline crack in the capbeam just

above the right edge of the right column on the beginning face. There is some map cracking with sound concrete in the right half of the right column on the end face. That portion of the capbeam which extends out on the right side and doesn't support any load has a few cracks with light hollowness on the end face.

- **East Abutment (End) –** Pedestals and abutment are in good condition. There is minor cracking on pedestal 2 and some delamination on pedestal 3. There is isolated delamination on the backwall.

STRUCTURAL STEEL INSPECTION SUMMARY

BIN 1069141

Special Emphasis Inspection Required

Non-Redundant/Fracture Critical Members – No
Pin and Hangers – No
Fatigue-Prone Welds – Yes
Non-Categorized Fatigue-Prone Details – No
Other (Specified in Text) – No

Special Emphasis Details:

Horizontal gusset plates welded to tension flanges of girders were inspected as required.

Overall Steel Condition:

Paint: Girders are the weathering steel type so no paint exists to report on, however, read section loss notes below.

Section Loss: The weathering steel is scaling in localized areas, particularly along bottom flanges with the fascia girders in worst condition.
Steel at the abutments showed some light to moderate scaling at the bottom flanges and the bottom half of the beam webs.

Due to the age of the steel a blanket 5% section loss should be used in load rating.

Girder Conditions: Except for the section loss outlined above the remaining girders are all in good condition on all spans.

Bearings: Pier #1 bearings are the expansion type with the top Teflon pad delaminating at the edges. Pier #2 fixed bearings appear in good condition.

D95042

FED. ROAD REG. NO.	STATE	FEDERAL AID PROJECT NO.	SHEET NO.	TOTAL SHEETS
1	N.Y.	~~I-IG-481-2 C(4)~~ I-UI-81-2 C(28)	431	571

INTERSTATE ROUTE CONNECTION 571
FOREST INTERCHANGE - JAMESVILLE
ONONDAGA COUNTY

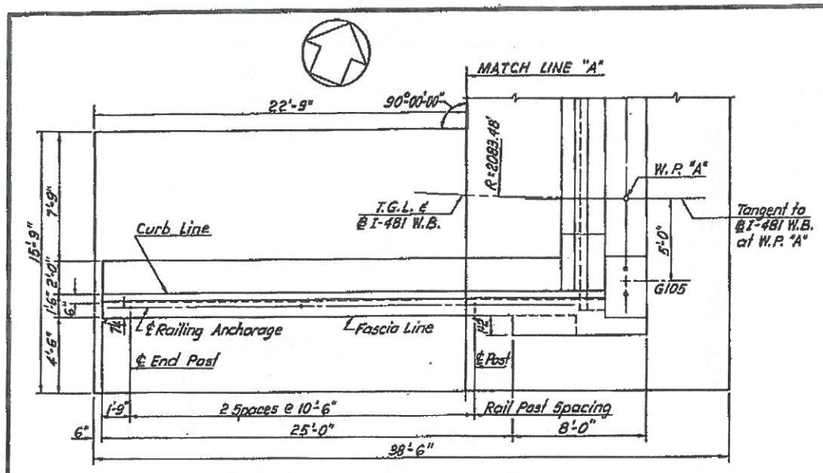

NOTE:
Railing not shown.

PLAN-SOUTHWEST WINGWALL
Scale: 4"=1'-0"

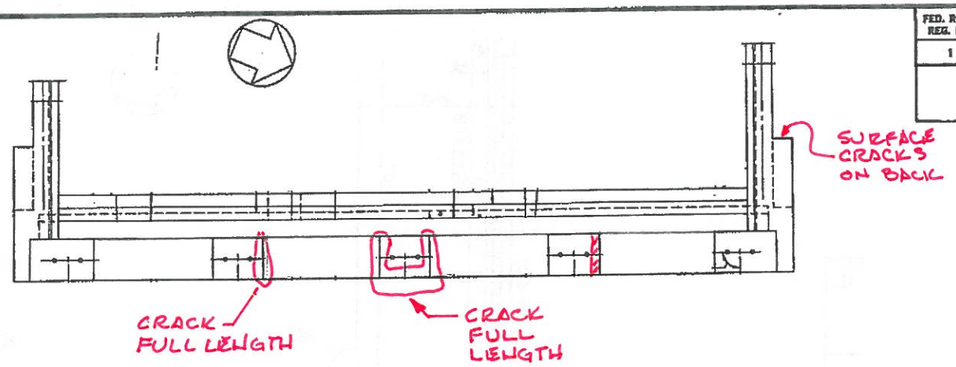

PLAN
Scale: 4"=1'-0"

LEGEND

- C-X — CORE LOCATION
- XX — PHOTO LOCATION
- DELAMINATION
- SPALLING
- CRACK
- MAP CRACKING
- MOISTURE

CORR. DECKING IS RUSTING OUT AT END OF DECK

ALONG THE LENGTH ON TOP OF BACKWALL A CORNER HAS BEEN REMOVE FOR JOINT REPAIR

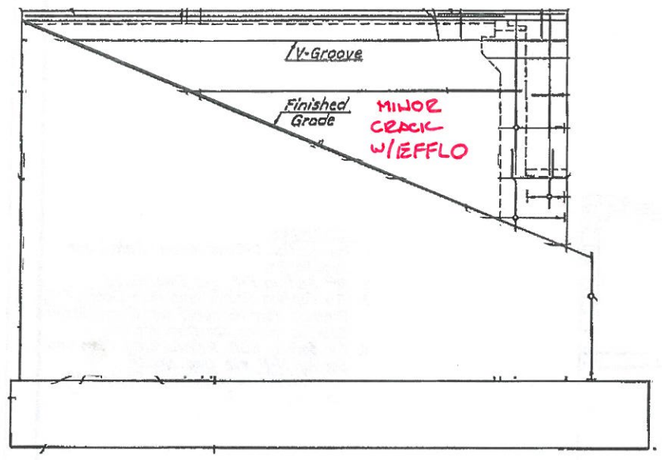

ELEVATION-SOUTHWEST WINGWALL
Scale: 4"=1'-0"

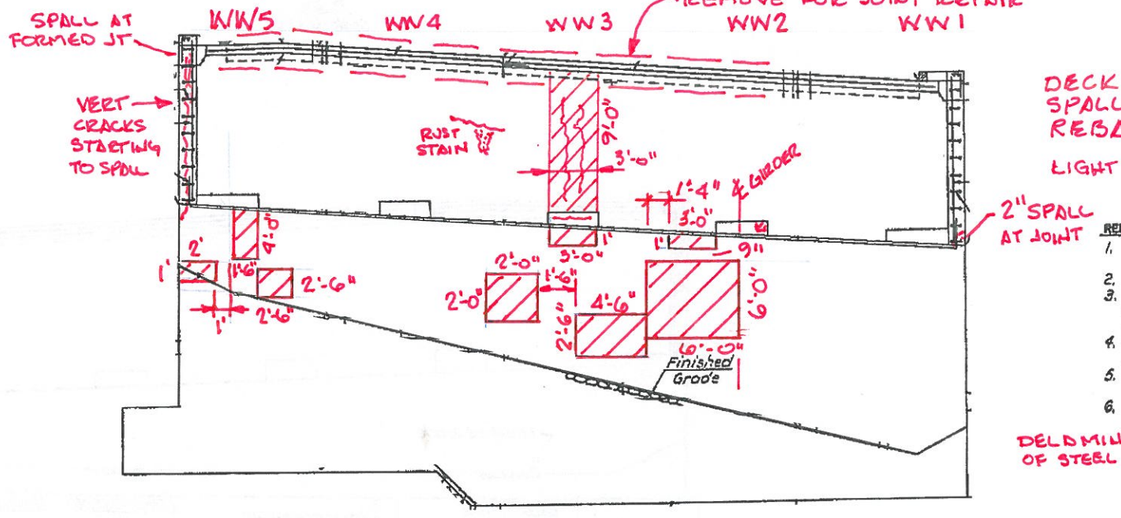

DECK HAUNCHES HAVE SPALLED AND EXPOSED REBAR - FULL WIDTH

LIGHT MAP CRACK INSIDE FACE CHEEK WALL (TYP.)

DELAMINATION ALONG BOTTOM OF STEEL BOTTOM FLANGE AT WW 1.

REFERENCES:

1. For Sections C-C, D-D and Header Detail, see Dwg. No. 24.
2. For Section E-E, see Dwg. No. 25.
3. For Footing Reinforcing Plan, Section B-B, Concrete Item Numbers and Quantities in Specific Pours, see Dwg. No. 26.
4. For Safety Walk Reinforcing Plan and Section A-A, see Dwg. No. 27.
5. For Additional Abutment References, see Dwg. No. 18.
6. For Bar List, see Dwg. Nos. 55 & 56.

NOTES:

1. Invert Elevations shown, are at Front Face of Abutment.
2. **Construction Joint Elevations shown, are at Front Face of Abutment.
3. *The Pedestals shall be constructed to their Plan Elevations only after the Abutments have been built, backfilled to roadway subgrade and a two (2) week waiting period observed.

ELEVATION
Scale: 4"=1'-0"

BEGIN ABUTMENT
BRIDGE NO. 6

I-481 OVER ERIE-LACKAWANNA RAILROAD
WEST ABUTMENT AND SOUTHWEST WINGWALL - WESTBOUND

Prepared and recommended GOODKIND & O'DEA, INC. Consulting Engineers
Date 12/1/75

DWG. NO.	SCALE	DATE	GOODKIND & O'DEA, INC. CONSULTING ENGINEERS
17	As noted	Nov. 1975	

BIN 1069141

As Changed to Reflect Construction
Revised by W.B.T. Crisbell
Bridge Checked by W. Rush
Revised by L. Wolfert
Plans Checked by [illegible]

D95042

FED. ROAD DIST. NO.	STATE	FEDERAL AID PROJECT NO.	SHEET NO.	TOTAL SHEETS
1	N.Y.	I-IG-481-2(24) I-UI-81-2(28)	446 R1	571

INTERSTATE ROUTE CONNECTION 571
FOREST INTERCHANGE - JAMESVILLE
ONONDAGA COUNTY

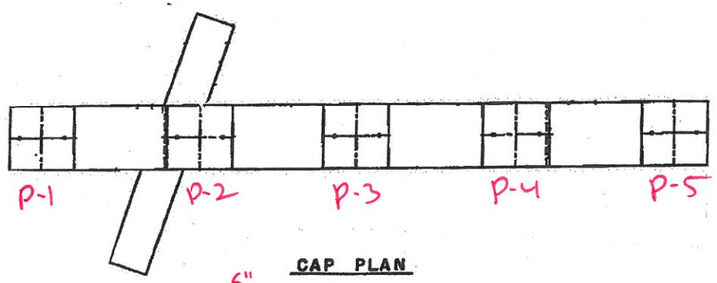

CAP PLAN

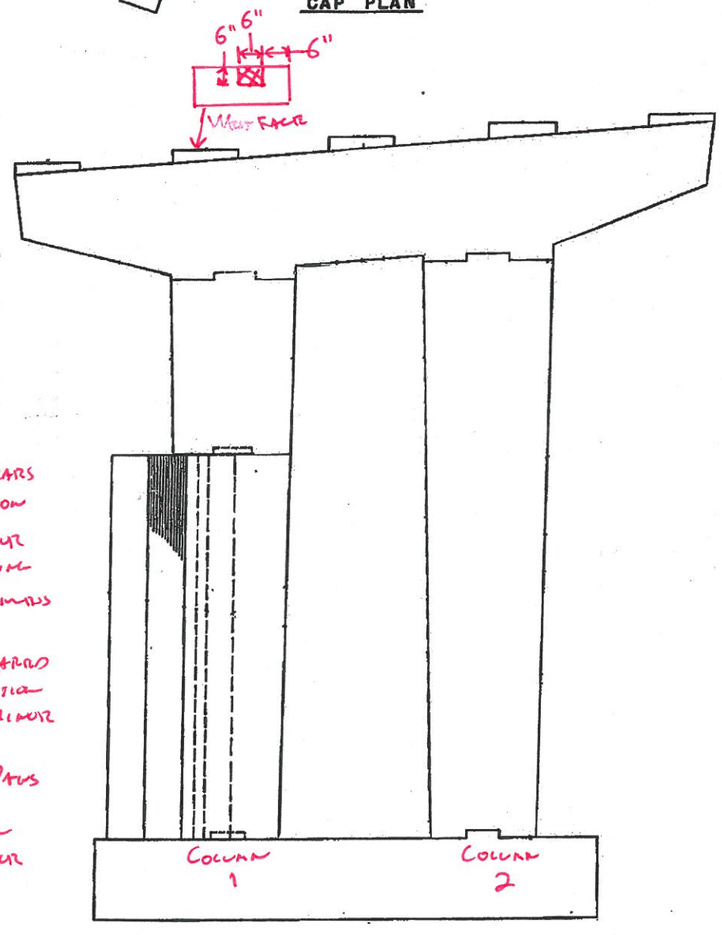

ELEVATION
WEST FACE

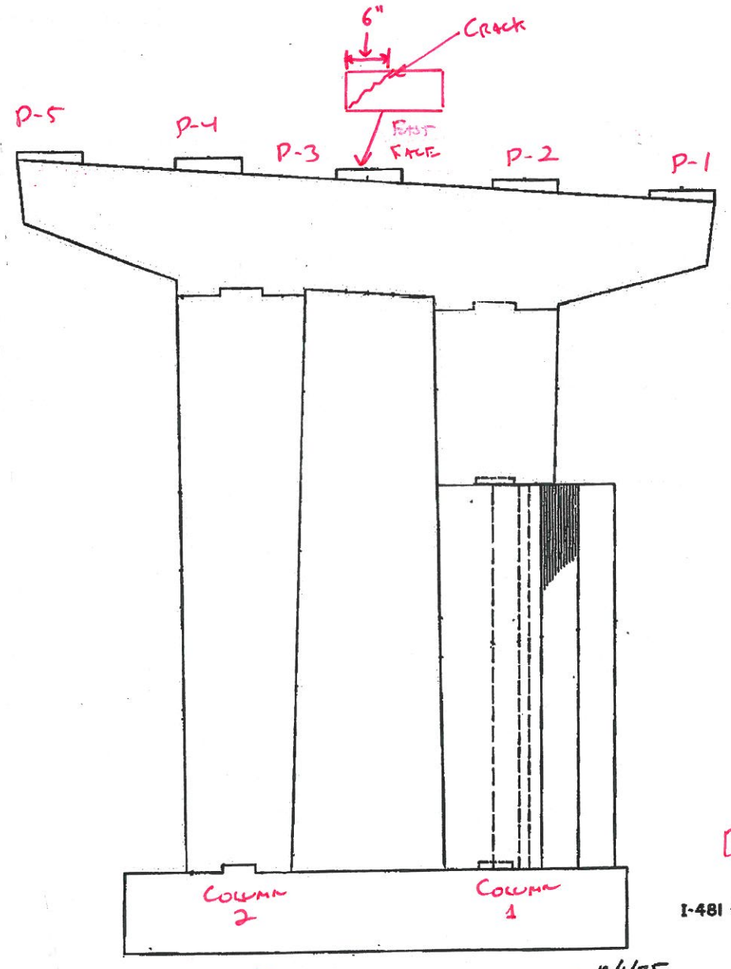

EAST FACE

LEGEND

- CORE LOCATION (C-X)
- PHOTO LOCATION (XX)
- DELAMINATION
- SPALLING
- CRACK
- MAP CRACKING
- MOISTURE

NOTES -

- CONCRETE APPEARS IN GOOD CONDITION WITH ONLY MINOR ISOLATED CRACKING AND SPALLING (LIMITED NOTED)
- BEARINGS APPEARED IN GOOD CONDITION WITH ONLY MINOR RUST.
- STEEL DECK PANS APPEARED IN GOOD CONDITION WITH ONLY MINOR RUST.

BIN 1069141

BRIDGE NO.6

I-481 OVER ERIE-LACKAWANNA RAILROAD

PIER 1 - WESTBOUND

Prepared and recommended
GOODKIND & O'DEA, INC.
Consulting Engineers
Date 12/1/75

DWG. NO.	SCALE	DATE	GOODKIND & O'DEA, INC. CONSULTING ENGINEERS
32	4"=10'	Nov. 1975	

D95042

FED. ROAD REG. NO.	STATE	FEDERAL AID PROJECT NO.	SHEET NO.	TOTAL SHEETS
1	N.Y.	I-IU-481-2(74) I-UI-81-2(128)	447 R1	571

INTERSTATE ROUTE CONNECTION 571
FOREST INTERCHANGE – JAMESVILLE
ONONDAGA COUNTY

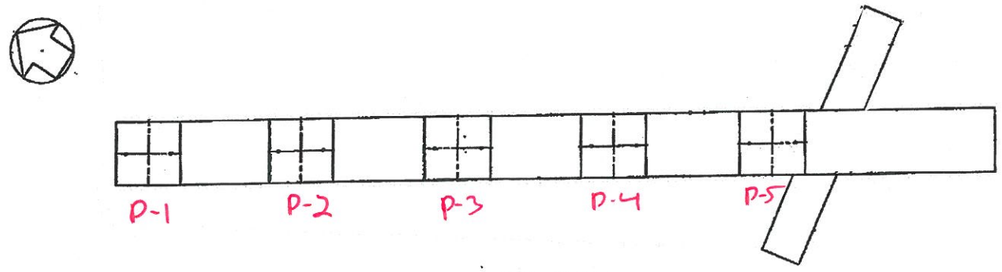

CAP PLAN

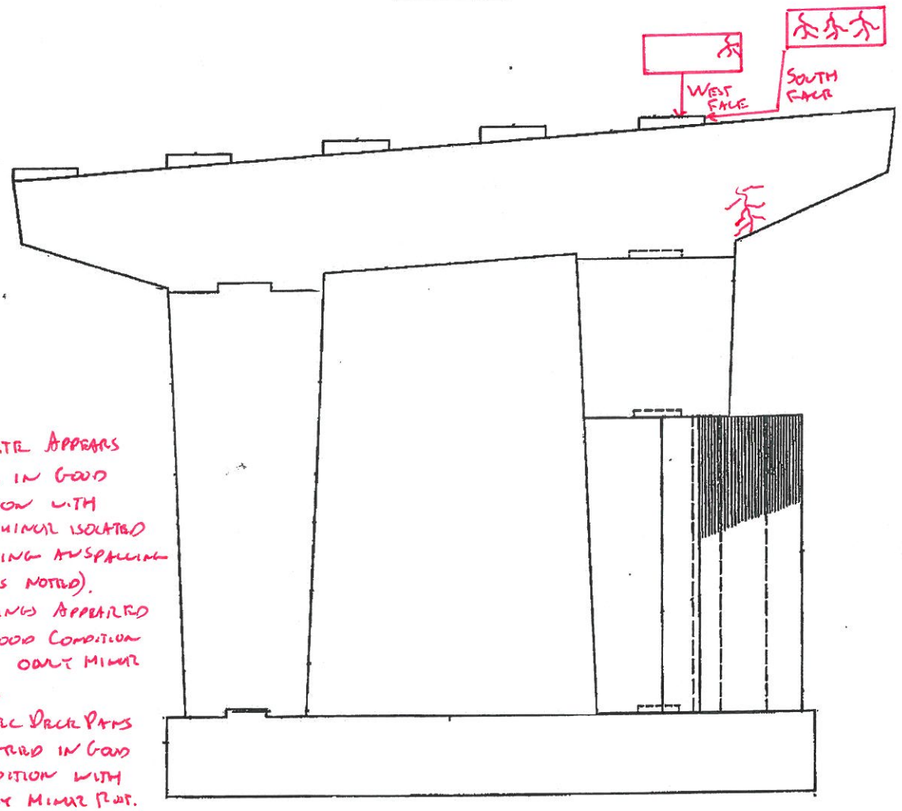

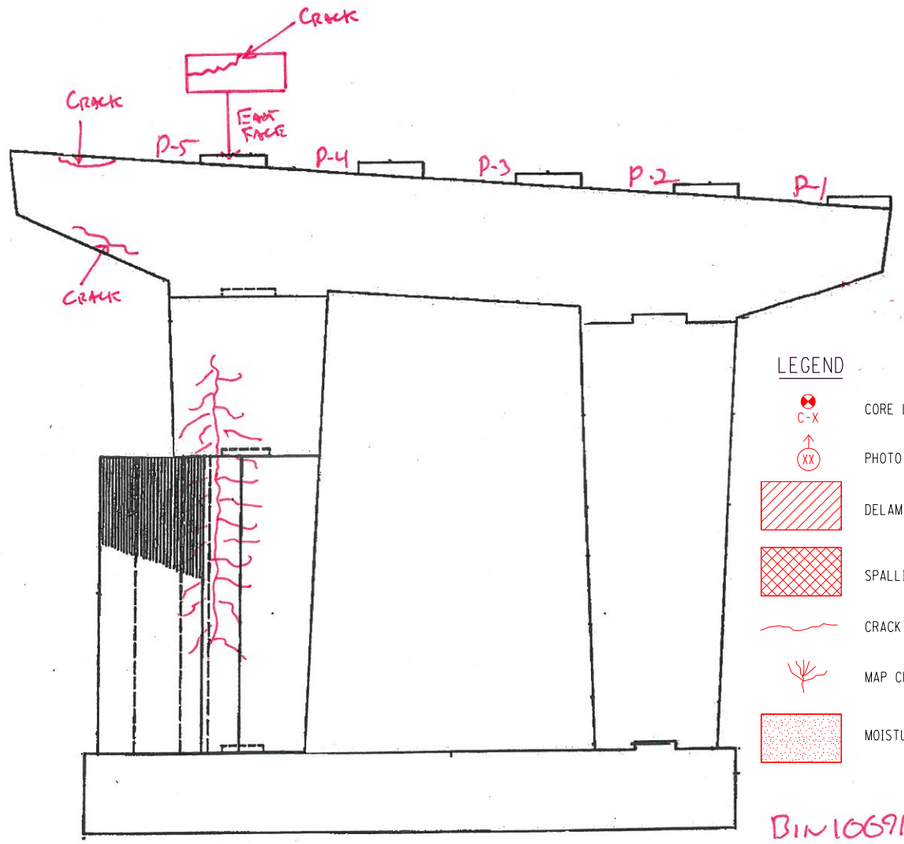

NOTES:
- CONCRETE APPEARS TO BE IN GOOD CONDITION WITH ONLY MINOR ISOLATED CRACKING AND SPALLING (UNLESS NOTED).
- BEARINGS APPEARED IN GOOD CONDITION WITH ONLY MINOR RUST.
- STEEL DECK PANS APPEARED IN GOOD CONDITION WITH ONLY MINOR RUST.

LEGEND

- C-X CORE LOCATION
- XX PHOTO LOCATION
- DELAMINATION
- SPALLING
- CRACK
- MAP CRACKING
- MOISTURE

BIN 1069141

ELEVATION

WEST FACE

EAST FACE

BRIDGE NO.6

I-481 OVER ERIE-LACKAWANNA RAILROAD

PIER 2 - WESTBOUND

Prepared and recommended
GOODKIND & O'DEA, INC.
Date 12/1/75
Consulting Engineers

DWG. NO.	SCALE	DATE	
33	4"=1'-0"	Nov. 1975	GOODKIND & O'DEA, INC. CONSULTING ENGINEERS

D95042

FED. ROAD REG. NO.	STATE	FEDERAL AID PROJECT NO.	SHEET NO.	TOTAL SHEETS
1	N.Y.	I-IC-481-2(129) I-IC-81-2(126)	434 R1	571

INTERSTATE ROUTE CONNECTION 571
FOREST INTERCHANGE - JAMESVILLE
ONONDAGA COUNTY

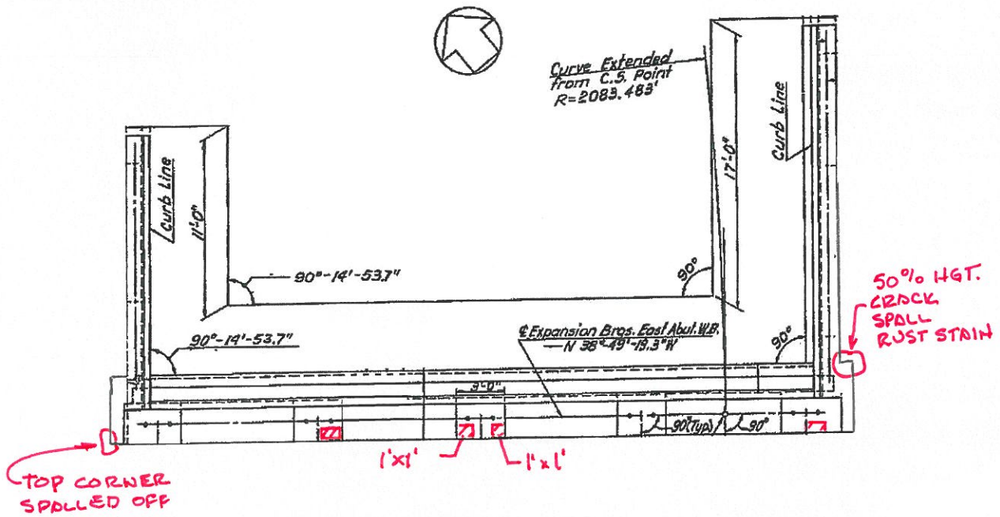

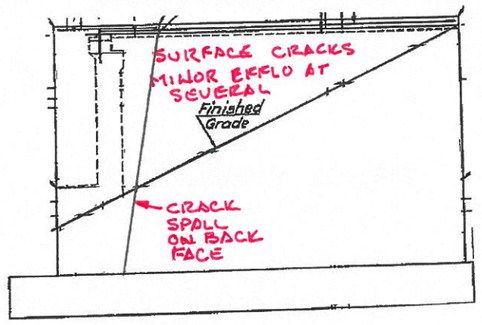

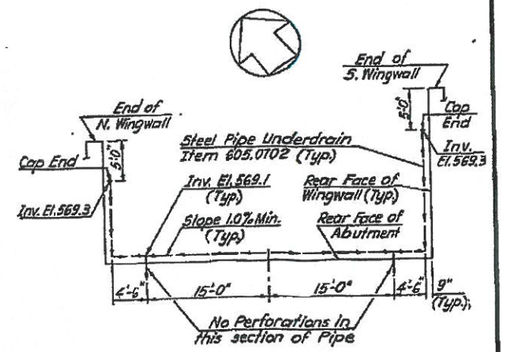

UNDERDRAIN PLAN AND FLOW DIAGRAM
Not to Scale

PLAN
Scale: 1/4"=1'-0"

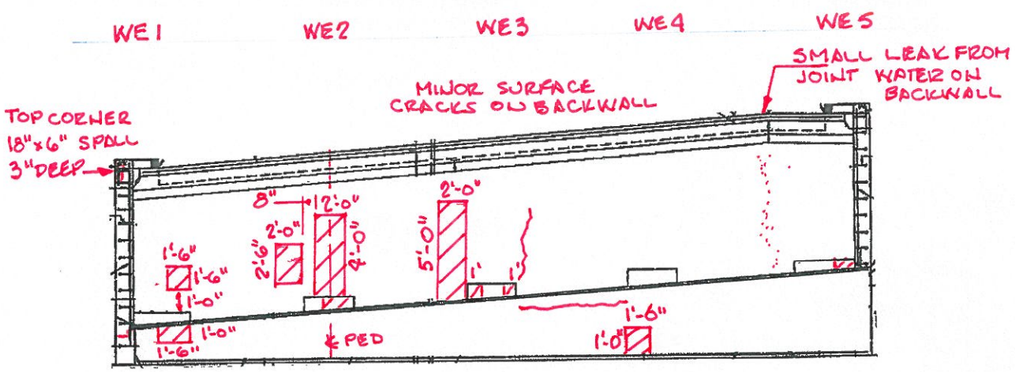

ELEVATION
Scale: 1/4"=1'-0"

SOUTHEAST WINGWALL
Scale: 1/4"=1'-0"

NOTE: Railing not shown.

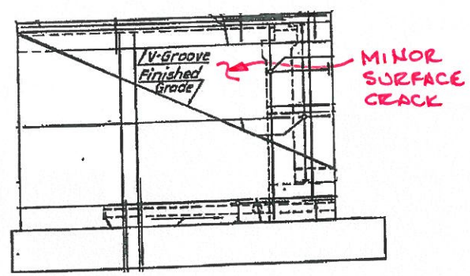

NORTHEAST WINGWALL
Scale: 1/4"=1'-0"

LEGEND

- C-X — CORE LOCATION
- XX — PHOTO LOCATION
- DELAMINATION
- SPALLING
- CRACK
- MAP CRACKING
- MOISTURE

NOTES:
1. Invert Elevations shown, are at Front Face of Abutment.
2. *Bridge Seat Elevations shown, are at Front Face of Backwall.
3. **Construction Joint Elevations shown, are at Front Face of Abutment.

Prepared and recommended GOODKIND & O'DEA, INC. Consulting Engineers
Date 12/1/75

END ABUTMENT
BRIDGE NO.6

I-481 OVER ERIE-LACKAWANNA RAILROAD

EAST ABUTMENT-WESTBOUND

DWG. NO.	SCALE	DATE	GOODKIND & O'DEA, INC. CONSULTING ENGINEERS
20	As noted	Nov. 1976	

BIN 1069141

In Charge of Design: J.D. Kirkpatrick
Design Checked by: M.J. Hill
Detailed by: L.M. Hopkins
Detail Checked by: J.D. Kirkpatrick

D95042

FED. ROAD REG. NO.	STATE	FEDERAL AID PROJECT NO.	SHEET NO.	TOTAL SHEETS
1	N.Y.	I-IU-481-2 (14) I-UI-81-2 (126)	455	571

INTERSTATE ROUTE CONNECTION 571
FOREST INTERCHANGE – JAMESVILLE
ONONDAGA COUNTY

SCALING

℄ Exp. Brgs. West Abut.
N 22°-12'-43.3" W

2 Bearing Stiffener Pls. @ Typ. End Diaphragm Radial to Girders (Typ.)

7"x7 Connection Pl. (Typ.)

7"x7 Intermediate Stiffener Pl. (Typ.)

FACIA SPALLS

D2 Typ. Intermediate Diaphragm except at Piers

Intermediate Diaphragms Radial to Girders (Typ.)

SEE DETAIL 3

℄ Exp. Brgs. ℄ Pier 1
N 27°-19'-37.3" W
MATCH LINE 1

∠ G1 G x 3/8 (Typ.)

G101
G102
G103
G104
G105

SEE DETAIL 4

W.P. 8
Sta. W136+14.00

9 Spaces @ 10'-1" = 90'-0" Radial (Typ.)

5'-0"

R= 2093.483'

℄ T.G.L. I-481 W.B.

W.P. 1
Sta. W138+00.0

d/2 d/2 d

2 Equal Spaces 3 Equal Spaces (Typ.)

10 Diaphragm Spaces @ 18'-7 3/16" = 186'-0" Along T.G.L.

2 Spaces @ 1/2 Normal Stiffener Spacing Typ. at all Supports.

SPAN 1

MATCH LINE 1

d d/2 d/2

D3

R= 2093.483'

℄ T.G.L. I-481 W.B.

SEE DETAIL 5

℄ Fixed Brgs. ℄ Pier 2
N 33°-42'-25.3" W
MATCH LINE 2

W.P. 2
Sta. W140+32.00

FACIA SPALL

FACIA SPALLING

12 Diaphragm Spaces @ 19'-4" = 232'-0" Along T.G.L.

MATCH LINE 2

FACIA SPALLS

SPAN 2

FACIA SPALL

℄ Exp. Brgs. East Abut.
N 38°-49'-19.3" W

SEE DETAIL 2

R= 2093.483'

℄ T.G.L. I-481 W.B.

Curve Extended from C.S. Point

W.P. "8"
Sta. W142+18.00
Offset 0.002' Lt.

C.S.

5'-0"

SCALING

10 Diaphragm Spaces @ 18'-7 3/16" = 186'-0" along T.G.L. to C.S. ; along Curve extended from C.S. Point

SPAN 3

NOTES:
100% HUMPS ON INSPECTION OF GUSSETT PLATES PERFORMED.
NO DEFECTS FOUND.

LEGEND

- CORE LOCATION (C-X)
- PHOTO LOCATION (XX)
- DELAMINATION
- SPALLING
- CRACK
- MAP CRACKING
- MOISTURE

BIN 1069141

BRIDGE NO.6

I-481 OVER ERIE-LACKAWANNA RAILROAD

FRAMING PLAN - WESTBOUND

Prepared and recommended
GOODKIND & O'DEA, INC.
Consulting Engineers

Date 12/1/75

DWG. NO.	SCALE	DATE	GOODKIND & O'DEA, INC. CONSULTING ENGINEERS
41	1"=10'	Nov. 1975	

In Charge of Design: J.F. Brainerd
Designed by: W.F. Gaskell
Drawn by: D.J. Kondziolka
Checked by: L. Wolff
Final Checked by: W.F. Gaskell

455

IN-DEPTH PHOTO DOCUMENTATION

C&S Engineers, Inc.
499 Col. Eileen Collins Blvd.
Syracuse, New York 13212
Phone: (315) 455-2000
Fax: (315) 455-9667
www.cscos.com

I-481 SB over NY S&W RR - BIN 1069141



DESCRIPTION: BRIDGE STRUCUTRE RIGHT-LOOKING END TO BEGIN

PHOTO 1



DESCRIPTION: BEGIN (WEST) ABUTMENT–LOOKING END TO BEGIN

PHOTO 2

C&S Engineers, Inc.
499 Col. Eileen Collins Blvd.
Syracuse, New York 13212
Phone: (315) 455-2000
Fax: (315) 455-9667
www.cscos.com

I-481 SB over NY S&W RR - BIN 1069141



DESCRIPTION: BEGIN (WEST) ABUTMENT – STEM – BETWEEN PEDESTALS 2 AND 3 – DELAMINATED CONCRETE

PHOTO 3



DESCRIPTION: BEGIN (WEST) ABUTMENT – STEM – BELOW PEDESTAL 3 – DELAMINATED CONCRETE

PHOTO 4

C&S Engineers, Inc.
499 Col. Eileen Collins Blvd.
Syracuse, New York 13212
Phone: (315) 455-2000
Fax: (315) 455-9667
www.cscos.com

I-481 SB over NY S&W RR - BIN 1069141

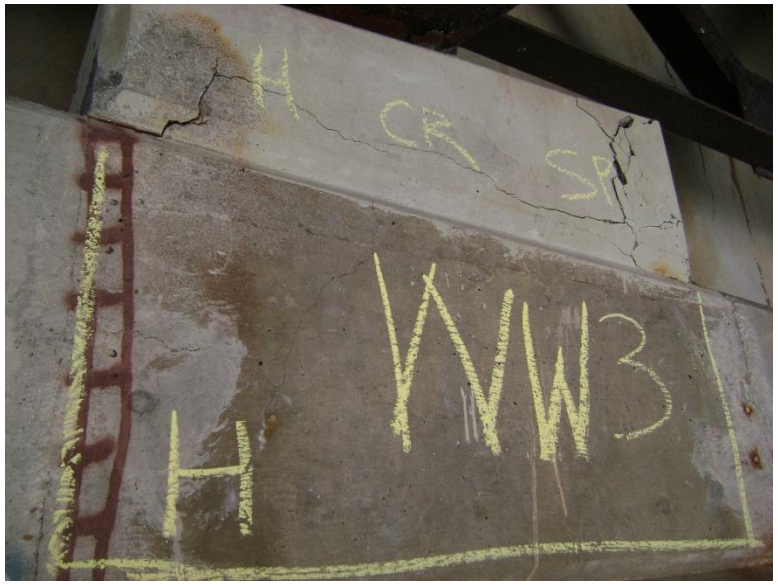

DESCRIPTION: BEGIN (WEST) ABUTMENT – PEDESTAL 3 AND STEM– DELAMINATED CONCRETE AND CRACKING

PHOTO 5



DESCRIPTION: BEGIN (WEST) ABUTMENT –STEM BELOW PEDISTAL 5–DELAMINATED CONCRETE

PHOTO 6

C&S Engineers, Inc.
499 Col. Eileen Collins Blvd.
Syracuse, New York 13212
Phone: (315) 455-2000
Fax: (315) 455-9667
www.cscos.com

I-481 SB over NY S&W RR - BIN 1069141



DESCRIPTION: BEGIN (WEST) ABUTMENT –TYPICAL BEARING

PHOTO 7



DESCRIPTION: BEGIN (WEST) ABUTMENT –TOP OF BACK WALL AND SPAN 1 DECK – BETWEEN PEDISTAL 3&4 – TYPICAL SPALLING OF CONCRETE AT INTERFACE

PHOTO 8

C&S Engineers, Inc.
499 Col. Eileen Collins Blvd.
Syracuse, New York 13212
Phone: (315) 455-2000
Fax: (315) 455-9667
www.cscos.com

I-481 SB over NY S&W RR - BIN 1069141



DESCRIPTION: BEGIN (WEST) ABUTMENT –SPAN 1 DECK PAN BETWEEN G1&G2 – SOME RUSTING DUE TO MOISTURE FROM DECK JOINT

PHOTO 9



DESCRIPTION: BEGIN ABUTMENT WING WALL CHEEK RIGHT-CRACKING AND DELAMINATION OF CONCRETE

PHOTO 10

C&S Engineers, Inc.
499 Col. Eileen Collins Blvd.
Syracuse, New York 13212
Phone: (315) 455-2000
Fax: (315) 455-9667
www.cscos.com

I-481 SB over NY S&W RR - BIN 1069141



DESCRIPTION: BEGIN (WEST) ABUTMENT – WING WALL LEFT - TYPICAL CONDITION

PHOTO 11



DESCRIPTION: BEGIN ABUTMENT - G1 AT PEDISTAL 1 – WEATHERING OF GIRDER

PHOTO 12

C&S Engineers, Inc.
499 Col. Eileen Collins Blvd.
Syracuse, New York 13212
Phone: (315) 455-2000
Fax: (315) 455-9667
www.cscos.com

I-481 SB over NY S&W RR - BIN 1069141



DESCRIPTION: SPAN 1 LOOKING END TO BEGIN FROM PIER 1 – TYPICAL CONDITION STEEL AND DECK PANS

PHOTO 13



DESCRIPTION: PIER 1 – END (EAST) FACE – LOOKING END TO BEGIN

PHOTO 14

C&S Engineers, Inc.
499 Col. Eileen Collins Blvd.
Syracuse, New York 13212
Phone: (315) 455-2000
Fax: (315) 455-9667
www.cscos.com

I-481 SB over NY S&W RR - BIN 1069141



DESCRIPTION: PIER 1 – PEDISTAL 3 – END FACE WITH MINOR CRACK – TYPICAL PIER EXPANSION BEARING

PHOTO 15



DESCRIPTION: PIER 1 – BEGIN (WEST) FACE – MINOR SPALL ON PEDESTAL 2

PHOTO 16

C&S Engineers, Inc.
499 Col. Eileen Collins Blvd.
Syracuse, New York 13212
Phone: (315) 455-2000
Fax: (315) 455-9667
www.cscos.com

I-481 SB over NY S&W RR - BIN 1069141



DESCRIPTION: PIER 2 – RIGHT FASCIA GIRDER – SCALING OF WEB STIFFENER – VIEWED TOWARD END

PHOTO 17



DESCRIPTION: SPAN 2 – RIGHT SIDE SPALL IN FASCIA – ABOVE FIRST PIER – VIEWED TOWARD BEGINNING

PHOTO 18

C&S Engineers, Inc.
499 Col. Eileen Collins Blvd.
Syracuse, New York 13212
Phone: (315) 455-2000
Fax: (315) 455-9667
www.cscos.com

I-481 SB over NY S&W RR - BIN 1069141



DESCRIPTION: SPAN 2 – RIGHT SIDE – TOP OF FASCIA IS SPALLED – END OF SPAN NEAR PIER 2 – VIEWED TOWARD END

PHOTO 19



DESCRIPTION: SPAN 2 – RIGHT SIDE SPALL IN FASCIA – ABOVE FIRST CONNECTION PLATE – VIEWED TOWARD END

PHOTO 20

C&S Engineers, Inc.
499 Col. Eileen Collins Blvd.
Syracuse, New York 13212
Phone: (315) 455-2000
Fax: (315) 455-9667
www.cscos.com

I-481 SB over NY S&W RR - BIN 1069141



DESCRIPTION: PIER 2 – END VIEW – EXTENTION OF CAPBEAM ON RIGHT SIDE – VIEWED TOWARD BEGINNING

PHOTO 21



DESCRIPTION: PIER 2 – PEDESTAL 2 – FIXED BEARING - VIEWED FROM END RIGHT – TYPICAL BRIDGE FIXED BEARING - PIER 2 ONLY

PHOTO 22

C&S Engineers, Inc.
499 Col. Eileen Collins Blvd.
Syracuse, New York 13212
Phone: (315) 455-2000
Fax: (315) 455-9667
www.cscos.com

I-481 SB over NY S&W RR - BIN 1069141



DESCRIPTION: PIER 2 – END VIEW – CRACK IN PEDESTAL 5 – RIGHT FASCIA PEDESTAL

PHOTO 23



DESCRIPTION: PIER 2 – END VIEW – CRACKS IN TOP & BOTTOM OF CAPBEAM EXTENTION

PHOTO 24

C&S Engineers, Inc.
499 Col. Eileen Collins Blvd.
Syracuse, New York 13212
Phone: (315) 455-2000
Fax: (315) 455-9667
www.cscos.com

I-481 SB over NY S&W RR - BIN 1069141



DESCRIPTION: PIER 2 – RIGHT COLUMN, END FACE– MAP CRACKING & MOISTURE STAINS FULL HEIGHT - RIGHT HALF (LEFT SIDE VIEWED FACE ON)

PHOTO 25



DESCRIPTION: END ABUTMENT (EAST) – GENERAL VIEW

PHOTO 26

C&S Engineers, Inc.
499 Col. Eileen Collins Blvd.
Syracuse, New York 13212
Phone: (315) 455-2000
Fax: (315) 455-9667
www.cscos.com

I-481 SB over NY S&W RR - BIN 1069141



DESCRIPTION: END ABUTMENT – PEDESTAL 1 AND BACKWALL ABOVE

PHOTO 27



DESCRIPTION: END ABUTMENT – BACKWALL BEHIND PEDESTAL 2

PHOTO 28

C&S Engineers, Inc.
499 Col. Eileen Collins Blvd.
Syracuse, New York 13212
Phone: (315) 455-2000
Fax: (315) 455-9667
www.cscos.com

I-481 SB over NY S&W RR - BIN 1069141



DESCRIPTION: END ABUTMENT – BACKWALL BEHIND PEDESTAL 3

PHOTO 29



DESCRIPTION: END ABUTMENT – END LEFT WING WALL – SPALL IN TOP CORNER

PHOTO 30

C&S Engineers, Inc.
499 Col. Eileen Collins Blvd.
Syracuse, New York 13212
Phone: (315) 455-2000
Fax: (315) 455-9667
www.cscos.com

I-481 SB over NY S&W RR - BIN 1069141



DESCRIPTION: END ABUTMENT – RIGHT WINGWALL – CRAK, SPALLING, AND STAINING

PHOTO 31



DESCRIPTION: BEGINNING ABUTMENT (WEST) – SCALING OF LEFT FASCIA GIRDER

PHOTO 32

C&S Engineers, Inc.
499 Col. Eileen Collins Blvd.
Syracuse, New York 13212
Phone: (315) 455-2000
Fax: (315) 455-9667
www.cscos.com

I-481 SB over NY S&W RR - BIN 1069141



DESCRIPTION: SPAN 1 – RIGHT FASCIA GIRDER – SCALING OF BOTTOM FLANGE – TYPICAL OF NUMEROUS GIRDERS

PHOTO 33



DESCRIPTION: END ABUTMENT (EAST) – SCALING OF GIRDER ABOVE PEDESTAL 3

PHOTO 34

1069141

I 481 WB/SB OVER N Y S & W R.R.

D95042

FED. ROAD REG. NO.	STATE	FEDERAL AID PROJECT NO.	SHEET NO.	TOTAL SHEETS
1	N.Y.	I-UI-81-2(126)	456	571

INTERSTATE ROUTE CONNECTION 571
FOREST INTERCHANGE - JAMESVILLE
ONONDAGA COUNTY

○→ INDICATES PHOTO WAS TAKEN BELOW THE BRIDGE DECK.

○→ INDICATES PHOTO WAS TAKEN ABOVE THE BRIDGE DECK

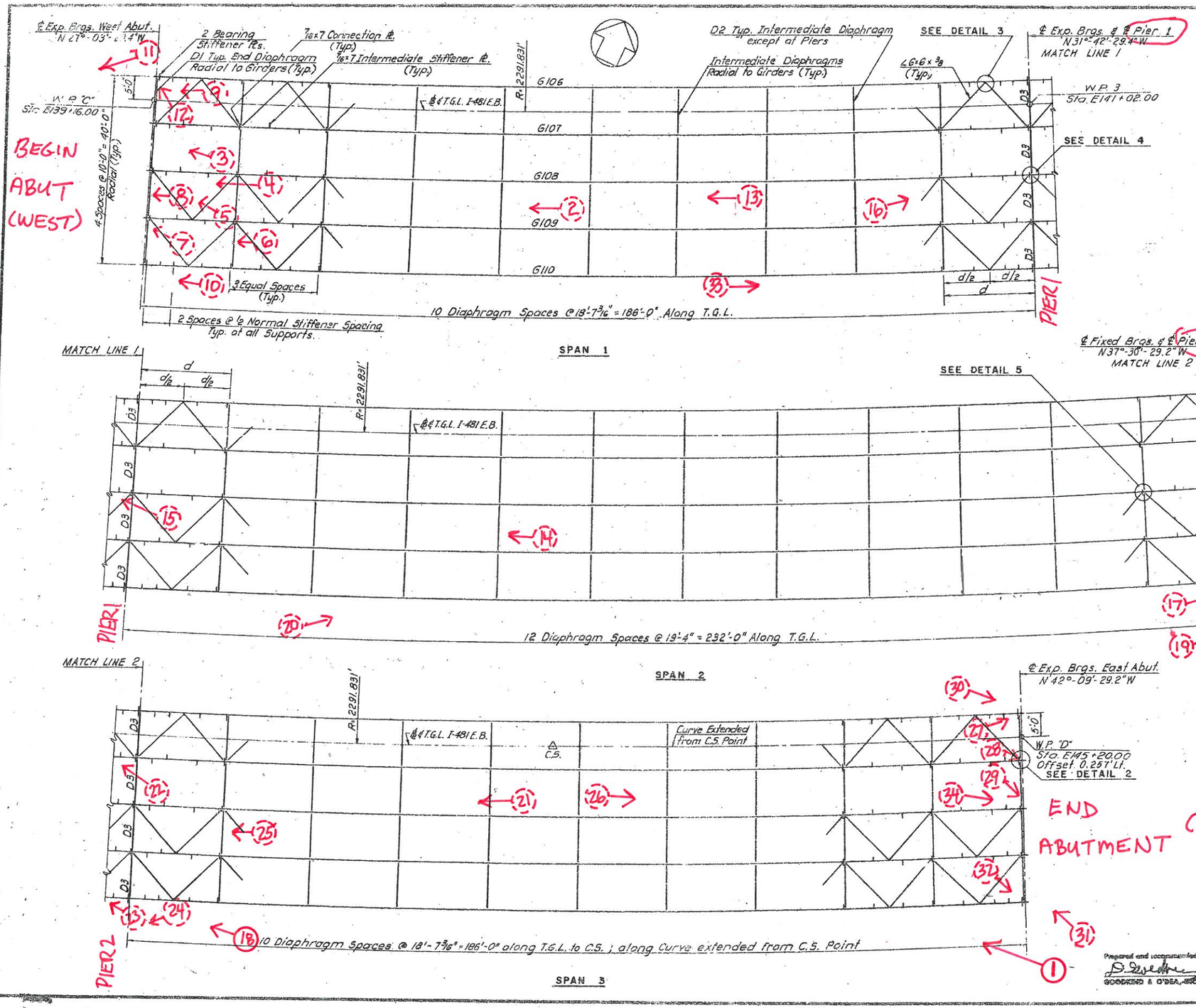

REFERENCES:
1. For Details 2 through 5, see Dwg. No. 45.
2. For Additional References see Dwg. No. 41.

PHOTO LOCATION PLAN

BRIDGE NO. 6

I-481 OVER ERIE-LACKAWANNA RAILROAD

FRAMING PLAN - EASTBOUND

Prepared and recommended
D. O'Dea
GOODKIND & O'DEA, INC. Consulting Engineers
Date 12-17-75

DWG. NO.	SCALE	DATE	GOODKIND & O'DEA, INC. CONSULTING ENGINEERS
42	1"=10'	Nov. 1975	

Detail Checked by [illegible]

ASBESTOS DOCUMENTATION

Asbestos Sampling Survey

Location:

BIN 1069141
Interstate Route I-481 South Bound
over CSX Railroad

Prepared for:

New York State
Department of Transportation

PIN 3056.13.111

LaBella Project No. 201001

August 2001

Table of Contents

Page

I. Project Summary 1

II. Site Description 1

III. Inspection Procedures 1

IV. Results 2

Certification 2

Figures and Table

I. Project Summary

In accordance with conditions of Term Agreement D012606, LaBella Associates, P.C. conducted an asbestos sampling survey of the Interstate Route I-481 south bound bridge over CSX Railroad. Based on laboratory analyses of bulk samples collected, no asbestos-containing materials were identified.

II. Site Description

The Site is located in Onondaga County, New York. For the purpose of this report, the Site consists of the Interstate Route I-481 south bound bridge over CSX Railroad. (See attached FIGURE 1 - Site Location Map).

III. Inspection Procedures

The following procedures were used to obtain the data for this Report:

A. A review of record drawings supplied by Region 3 personnel and a visual inspection of the subject structure were conducted to identify potential visible/accessible sources of asbestos-containing materials. Observations and notes were made to provide a description of the structure, and an estimate of the approximate amount, length, or area of ACM present.

B. Physical or operational constraints, which might affect the removal of the ACM, were identified and reported.

C. Bulk samples of suspected ACM were collected during the site inspection of the subject structure. Samples were taken from each homogeneous area that may contain ACM.

D. Samples were submitted for analysis. Preliminary PLM analyses of NOB materials were performed by LaBella Laboratories, a NYSDOH approved laboratory, to determine the presence and percentage of asbestos in each sample. TEM analyses of NOB materials, if necessary, were performed by AMA Analytical, Inc.

E. Lab results were used to determine the approximate location, type, and amount of the verified ACM.

F. A drawing of the structure at the Site was created, in order to show sample locations and the approximate locations and amounts of confirmed ACM observed in accessible locations.

Only accessible areas were inspected. Inaccessible areas, such as areas within the bridge or the approaches to the bridge were not included in this inspection. No investigation was conducted by LaBella Associates to determine the presence of underground utilities on or in the immediate vicinity of the Site. Actual sample locations are shown in the attached FIGURE 2. Results of bulk sample analyses are tabulated in the attached TABLE.

IV. Results

BIN 1069141 Interstate Route I-481 South Bound over CSX Railroad

Based on laboratory analyses of bulk samples collected, no asbestos-containing materials were identified.

Certification

LaBella Associates, P.C. certifies the accuracy of this report, to the best of our knowledge, based on the information collected as described in the Inspection Procedures Section of this investigation.

Figures & Table

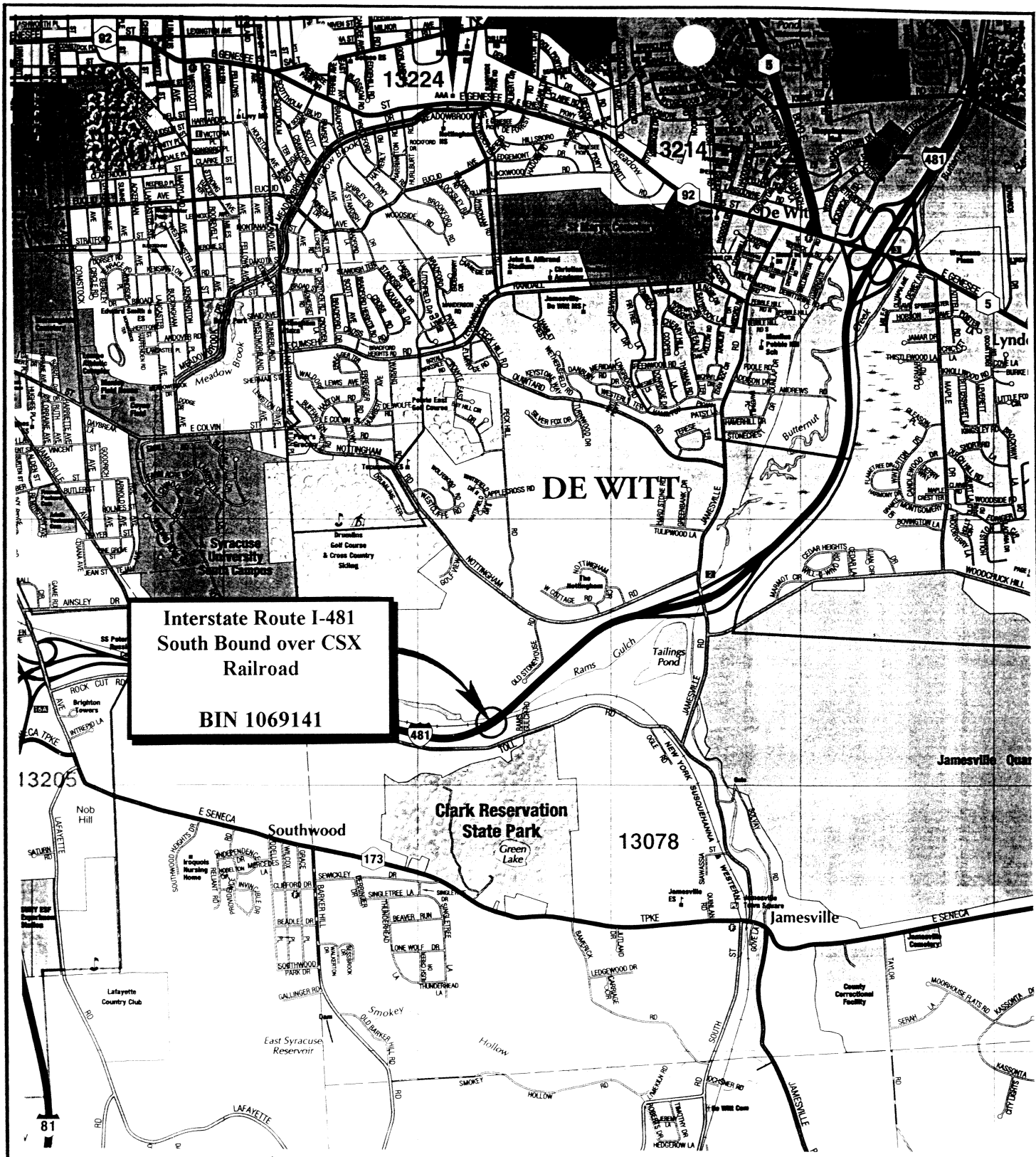

N

FIGURE 1
Site Location Map

Interstate Route I-481 South Bound over CSX Railroad
Onondaga County, New York

LABELLA

PROJECT NO. 201001

NOTE: NO ASBESTOS-CONTAINING MATERIALS IDENTIFIED.

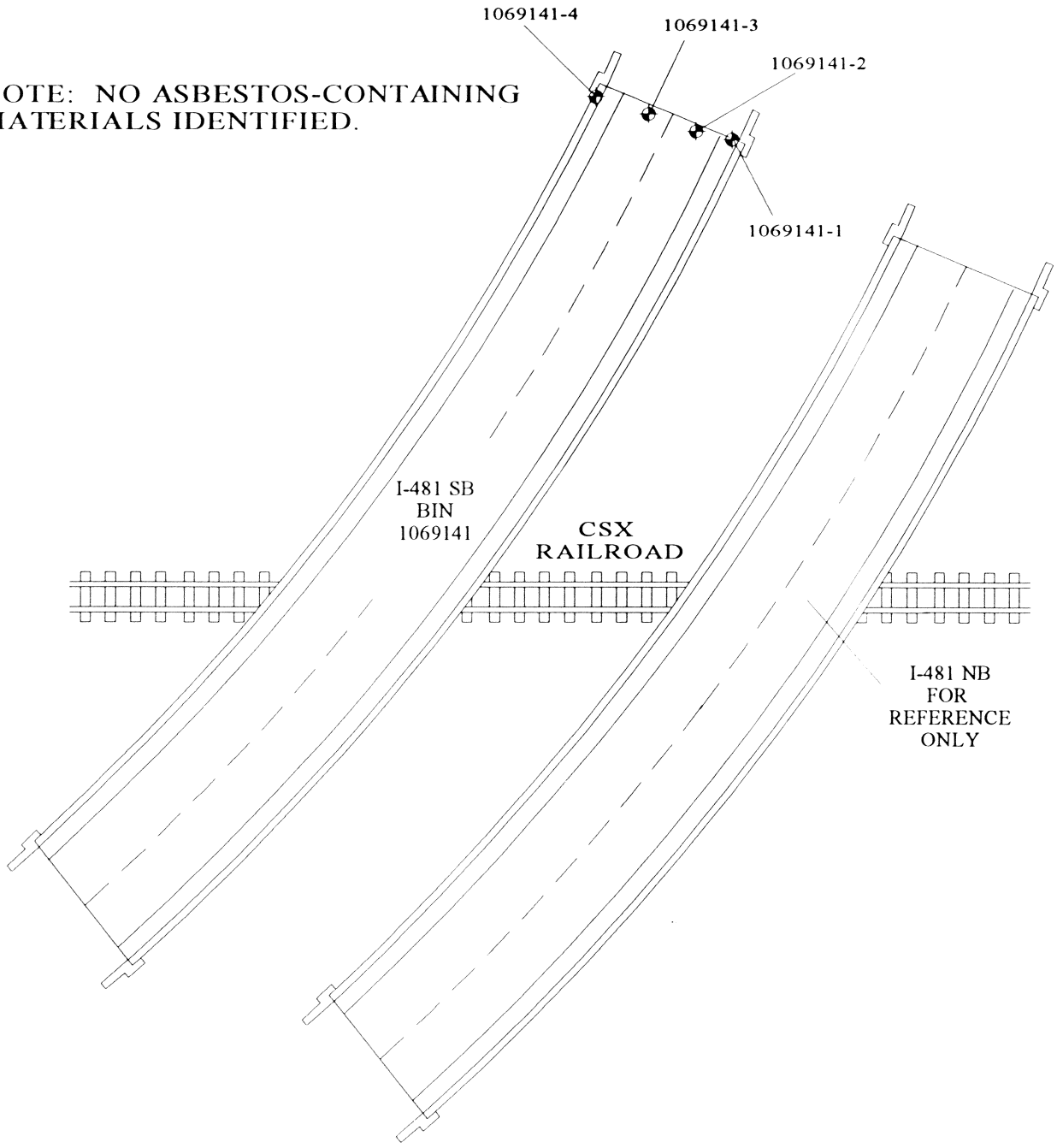

LEGEND

◆ 1069141-1 SAMPLE LOCATION

NORTH

PROJECT TITLE: ASBESTOS SAMPLING SURVEY
19 BRIDGES ALONG INTERSTATE I-481
ONONDAGA COUNTY, NEW YORK

PROJECT NO. 201001

PIN 3056.13.111

FIGURE TITLE: FIGURE 2 BIN 1069141
I-481 SB OVER CSX RAILROAD
SAMPLE LOCATIONS &
CONFIRMED ACM

NOT TO SCALE

DATE AUGUST, 2001

Bulk Sample Results Table

Asbestos Sampling Survey
BIN 1069141
Interstate Route I-481 SB over CSX Railroad
Onondaga County, New York
LaBella Project # 201001
PIN 3056.13.111

Sample #	Sample Location	Type of Material	Results % Asbestos	Amount of Material	Specification Item No.
1069141-1	East End of Bridge in Expansion Joint	Joint Repair Material	None Detected	N/A	N/A
1069141-2	East End of Bridge Beneath Bearing	Bearing Pad	None Detected	N/A	N/A
1069141-3	East End of Bridge on Pedestal	Gray Masonry Coating	None Detected	N/A	N/A
1069141-4	East End of Bridge on I-Beam	White Caulking Compound	None Detected	N/A	N/A

ASBESTOS DOCUMENTATION FROM WATTS ARCHITECTURE & ENGINEERING, INC.

(WILL REPLACE BIN FOLDER ASBESTOS REPORT UPON COMPLETION)

NEW YORK STATE
DEPARTMENT OF TRANSPORTATION
D031085 P.I.N 3501.60

LEVEL 1 LOAD RATING
B.I.N. 1069141
I-481 Southbound over NY S&W Railroad

LOAD RATING SUMMARY TABLE (LOAD FACTOR)				
CONTROLLING MEMBER	**CONTROLLING PARAMETER**	**LIVE LOAD**	**INVENTORY RATING**	**OPERATING RATING**
EXTERIOR GIRDER G105	FLEXURE	HS20-44	HS 40.4 (72.7 TONS)	HS 67.4 (121.3 TONS)
EXTERIOR GIRDER G105	FLEXURE	ALTERNATE MILITARY LOADING	3.3 (79.2 TONS)	5.5 (132.0 TONS)

DOES NOT INCLUDE FUTURE WEARING COURSE

ANALYSIS METHOD:LOAD FACTOR

RECOMMENDED POSTING AS-IS CONDITION: _____ Tons __X__ None

CALCULATED BY:

STATE OF NEW YORK JESSICA S. BAUER LICENSED PROFESSIONAL ENGINEER No. 084915

DATE: 3/27/15

QUALITY ASSURANCE BY:

STATE OF NEW YORK PAUL F. BYRNE LICENSED PROFESSIONAL ENGINEER 055928

DATE: 3/27/15

C&S COMPANIES®

499 Col. Eileen Collins Blvd.
Syracuse, NY 13212
phone 315-455-2000
fax 315-455-9667
www.cscos.com

ENGINEERS
DESIGN BUILD
TECHNICAL RESOURCES
OPERATIONS

C&S Companies

C&S Engineers, Inc.
Syracuse Hancock International Airport
Syracuse, NY 13212
phone 315-455-2000
fax 315-455-9667
www.cscos.com

TECHNICAL MEMORANDUM

TO: FILE (190.514.001)

FROM: JESSICA S. BAUER, P.E.
NYSPE 084915

DATE: FEBRUARY 24, 2014

C&S PROJECT NO.: 190.514.001

RE: SEISMIC ASSESSMENT SUMMARY
NEW YORK STATE DEPARTMENT OF TRANSPORTATION
D031085; PIN 3501.60; I-81

BIN: 1069141 Seismic Assessment

This memorandum summarizes the seismic assessment conducted for BIN 1069141 as part of the Interstate 81 Project in Syracuse, NY. The purpose of the assessment is to determine if seismic retrofits are warranted at the superstructure to substructure connection, and if further seismic evaluation of the structure is required. This memorandum will give the assessment results, retrofits required and recommendations for further seismic evaluation of the structure.

ASSESSMENT PROCEDURE

The seismic assessment was performed in accordance with the FHWA Seismic Retrofitting Manual for Highway Structures: Part 1 - Bridges, January 2006. As per the referenced manual, seismic assessment was performed for both lower level and upper level earthquake ground motion. The lower level earthquake ground motion has a reasonable likelihood of occurrence within the life of the bridge (50% probability of exceedance within a 75 year bridge life). The upper level earthquake ground motion has a finite likelihood of occurrence within the life of the bridge (7% probability of exceedance within a 75 year bridge life).

Values for the spectral acceleration for the Syracuse area used in the assessment are as follows:

- Lower Level Earthquake Ground Motion for a Short Period (0.2 seconds): $S_S = 0.0251$
- Lower Level Earthquake Ground Motion for a Long Period (1.0 seconds): $S_1 = 0.0076$
- Upper Level Earthquake Ground Motion for a Short Period (0.2 seconds): $S_S = 0.139$
- Upper Level Earthquake Ground Motion for a Long Period (1.0 seconds): $S_1 = 0.047$

These values are considered constant and are the same for all seismic assessments of bridges in the Syracuse area.

The Site Class is based on the soil conditions at the bridge location. It was determined that this parameter has little effect on the results of the seismic assessment because the spectral

You created this PDF from an application that is not licensed to print to novaPDF printer (http://www.novapdf.com)

acceleration values for the Syracuse area are small. Based on this, a site class of D was used for all seismic assessments of bridges in the Syracuse area.

Bridge parameters used in the seismic assessment were retrieved from the record drawings and WinBolts data.

The seismic assessment takes into account the anticipated service life, importance, and the seismic exposure of the bridge to determine a seismic retrofit category (SRC). The SRC is then used to determine seismic evaluation methods and retrofit measures. There are four SRCs, A through D. Seismic retrofit category A is the lowest category; bridges in this category do not require retrofits or further seismic evaluation. Seismic retrofit category D is the highest category; bridges in this category requiring the most rigorous seismic evaluations and retrofits.

ASSESSMENT RESULTS

The SRC for the bridge is "**C**" for lower level earthquake ground motion and "**B**" for upper level earthquake ground motion.

RETROFITS REQUIRED

Bearing replacements are not required at the abutments or piers. Seat width improvements are required at the abutments. Additional retrofits may be required if further seismic evaluation is needed.

RECOMMENDATIONS FOR FURTHER SEISMIC EVALUATION

For the lower level earthquake ground motion, it is recommended that capacity/demand ratios for bridge components are calculated as per Section 5.4 of the referenced manual. For the upper level earthquake ground motion, it is recommended that the capacities of the bearings are checked as per Section 5.2 of the referenced manual.

Retrofit cost estimates will be provided after any further required seismic evaluations are completed.

You created this PDF from an application that is not licensed to print to novaPDF printer (http://www.novapdf.com)

C&S Engineers, Inc.
Syracuse Hancock International Airport
Syracuse, NY 13212
phone 315-455-2000
fax 315-455-9667
www.cscos.com

TECHNICAL MEMORANDUM

TO: **FILE (190.514.001)**

FROM: **PAUL BYRNE, P.E.**
NYSPE 055928

DATE: **MARCH 19, 2015**

C&S PROJECT NO.: 190.514.001

RE: **NEW YORK STATE DEPARTMENT OF TRANSPORTATION**
D031085; PIN 3501.60; I-81 Opportunities, BIN 1069141 Fatigue Evaluation

---

This memorandum documents a fatigue evaluation conducted for the existing Interstate 81 Viaduct Project. Existing structures with AASHTO Category D, E, and E' fatigue-prone details require 100% hands-on inspection unless proven to be exempt. The purpose of the evaluation is to assess the remaining life of fatigue-prone components.

EVALUATION PROCEDURES

The fatigue evaluation was performed in accordance with the AASHTO Guide Specification for Fatigue Evaluations of Existing Steel Bridges, 1990. Fatigue-prone welds identified in the biennial inspection reports were located on record drawings and confirmed visually in the field. Additional information concerning fatigue-prone welds located in BIN folders was also obtained and reviewed prior to inspection.

EVALUATION RESULTS

The results of the fatigue evaluation of the controlling span (Span 2) of the existing bridge are shown below. The remaining safe fatigue life of the fatigue components for girder G105 in span 2 have been **exhausted.**

Fatigue Detail Location	Remaining Safe Fatigue Life (Years)	Remaining Mean Fatigue Life (Years)
Span 2, Exterior Girders G101, Gusset Plate at Bot. Flange, Midspan	8.26	114.70
Span 2, Interior Girders G102, Gusset Plate at Bot. Flange, Midspan	52.24	331.11
Span 2, Interior Girders G103, Gusset Plate at Bot. Flange, Midspan	144.49	785.06
Span 2, Interior Girders G104, Gusset Plate at Bot. Flange, Midspan	42.52	283.26
Span 2, Exterior Girders G105, Gusset Plate at Bot. Flange, Midspan	-1.17	68.28

E. Recommendations:

The purpose of this deck evaluation is to document and determine existing conditions of the deck. It will be used as a tool for developing the scope of work and cost estimates for the development and comparison of alternatives for the overall project.

The total damaged area was less than 1% of the total deck area. Due to the age, condition and high chloride-ion content of the bridge deck concrete, the bridge deck should be rehabilitated or replaced to meet current standards and to mitigate excessive future maintenance costs.

Option 1 – Scarify and Bridge Deck Overlay

The maximum service life this option would provide is 25 years. The design life of this project is 30 years (ETC +30). This option does not meet the project objectives of obtaining 30+ years of service life.

Option 2 – Bridge Deck Rehabilitation with 100% Deep Removal

This option will involve partial depth reconstruction with top mat rebar exposure of the entire bridge deck to remove chloride contaminated concrete (100% deep removal). The existing bridge deck thickness is 9 ¼" with 3 ¼" of concrete cover over the top mat of reinforcing. The proposed partial depth reconstruction will include the addition of ¼" of concrete to provide the standard of 9 ½" bridge deck thickness. The existing top mat of reinforcing bars will be removed and replaced with standard 3" of concrete cover. The existing non-conforming bridge railing will be removed and replaced with single-slope concrete barrier. The existing approach slabs will receive the same repair treatment as the deck. The existing deteriorated bridge joints will be replaced with armorless bridge joints. This

option would provide a service life of 35 years to the bridge deck. The construction cost of this option is $1.97 million.

Option 3 – Bridge Deck Replacement with Cast-In-Place Concrete

This option will involve the complete demolition of the existing bridge deck, 2-rail bridge railing, bridge deck joints and approach slabs. The bridge deck would be replaced with a new concrete deck, new single-slope concrete barrier and new armorless bridge joints. The approach slabs will also be replaced under this option. The new bridge deck would be 9 ½" standard thickness as compared to the 9 ¼" existing thickness. This option would provide a service life of 40 years to the bridge deck. The construction cost of this option is $2.43 million.

Option 4 – Bridge Deck Replacement with Pre-cast Concrete Deck Panels

This option will have the highest construction cost of all of the options however; traffic control costs may be lower due to reduced construction time. Comparison of accelerated construction to conventional construction is beyond the scope of work for this project at this time.

IN-DEPTH INSPECTION REPORT

D031085 P.I.N. 3501.60

B.I.N. 1069142

TEAM LEADER	Bruce Opalka, P.E.	60413
		NYSPE LICENSE #

ASSISTANT TEAM LEADER	Drew Fuller, PE
ASSISTANT TEAM LEADER	Charles Brooks, P.E.
ASSISTANT TEAM LEADER	Logan Bessel, EIT

FEATURE CARRIED	I-481 EB
FEATURE CROSSED	NY Susquehanna & W

DATE FIELD WORK BEGAN	January 27,2014
DATE FIELD WORK COMPLETED	January 29, 2014

TABLE OF CONTENTS

- TP 349 & 350
- IN-DEPTH CONDITION DOCUMENTATION
- IN-DEPTH PHOTO DOCUMENTATION
- ASBESTOS REPORT

TP 349 & TP 350

BRIDGE ELEMENT RATINGS

Inspection Date: 10/4/2013 RC: 33 BIN: 1069142

Bridge Ratings

Carried: 481I 481I33012015 Crossed: NY SUSQUEHNNA & W CheckValue: 1,818,927,211

Inspection Agency: 10 - NYSDOT Type of Inspection: 1 - BIENNIAL
GTMS: B02 -- Unpainted Steel Continuous - Stringer/Multi-Beam or Girder
POSTINGS: See Gen Rec Page 1 for Postings at time of inspection.
Further Investigation Needed: No
State Highway Number: 76-2 Milepoint: 2.11 AADT/Yr: 14636 / 2010
Orientation: 2 - Northeast Political Unit: 0233 - Town of DEWITT Year Built: 1980
Total Spans: 3 Ramp Bridge Attached To Span: NA BIN: NA
General Recommendation: 6 Computed Condition Rating: 4.903

Abutment Ratings:	**Beg Abut**	**End Abut**
Joint with Deck	6	6
Bearings, Bolts, Pads	7	6
Seats and Pedestals	4	4
Backwall	5	4
Stem (Breastwall)	5	5
Erosion or Scour	6	6
Footings	9	9
Piles	8	8
Recommendation	6	5

Wingwall Ratings:	**Beg Abut**	**End Abut**
Walls	5	5
Footings	9	9
Erosion or Scour	6	6
Piles	8	8

Channel Ratings:	**Channel**
Stream Alignment	8
Erosion and Scour	8
Waterway Opening	8
Bank Protection	8

Approach Ratings:	**Approaches**
Drainage	6
Embankment	6
Settlement	7
Erosion	5
Pavement	7
Guide Railing	5

Number of Flags Issued:

RED: 0 Yellow: 0 Safety: 0

Vulnerability Reviews Recommended: 1=Yes, 2=No, 3=NA, X=NotActive

Hydraulic: 3	Overload: X	Steel: 2
Collision: 2	Concrete: X	Seismic: X

Inspector's Signature: CheckValue: 1,818,927,211 Date: 10/4/2013

David Hann,PE () (Inspector ID:3000055)

Signed copy of this inspection report is available in the appropriate NYSDOT Regional Office

Reviewed By: Date: 11/15/2013

James R. Manning,PE () (QC ID:3000023)

Signed copy of this inspection report is available in the appropriate NYSDOT Regional Office

Inspection Date: 10/4/2013 RC: 33 BIN: 1069142

Span Ratings

Carried: 481I 481I33012015 Crossed: NY SUSQUEHNNA & W CheckValue: 1,818,927,211

Deck Element Ratings:	001	002	003
Wearing Surface	6	6	5
Curbs	6	6	6
Sidewalks, Fascias	4	4	4
Railings, Parapets	5	6	5
Scuppers	8	6	6
Gratings	8	8	8
Median	8	8	8
Mono Deck Surface	6	6	6

Superstructure Ratings:	001	002	003
Structural Deck	5	6	5
Primary Members	6	6	6
Secondary Members	6	6	6
Paint	4	4	4
Joints	8	8	8
Recommendation	6	6	6

Pier Ratings:	001	002	003
Bearings, Bolts, Pads	4	6	8
Pedestals	6	5	8
Top of Cap or Beam	6	6	8
Stem Solid Pier	6	6	8
Cap Beam	4	5	8
Pier Columns	6	6	8
Footings	9	9	8
Erosion or Scour	6	6	8
Piles	8	8	8
Recommendation	5	6	8

Utility Ratings:	001	002	003
Lighting	8	8	8
Sign Structure	8	8	8
Utilities and Support	8	8	8

Field Notes:

Field Date	Arrival	Departure	Temp (C)	Temp (F)	Weather Conditions
10/4/2013	8:00:00 AM	12:30:00 PM		55	Overcast

IN-DEPTH CONDITION DOCUMENTATION

IN DEPTH INSPECTION REPORT

BIN 1069142

- **In-Depth Condition:**

Visual Inspection: Miscellaneous concrete repairs were made to the abutments, bearing restoration, guide railing and joint replacement under contract D259214 (10/02).

Cracks, spalls, and other field observations are shown on the plans. Below is a brief summary of conditions for each feature.

Superstructure

- **Deck –** See Bridge Deck Evaluation Report.
- **Steel –** See Structural Steel Inspection Summary.
- **Bearings –** Bearings were restored under contract D259214 (10/02)

Substructure

- **West Abutment (Begin) –** There is spalling along the underside of the joint with the worst at the top of the back wall above pedestal 1. The pedestals are in fair to good condition with some light to moderate delamination. The backwall has moderate delamination in between pedestals. The top corner of the abutment between pedestals 3 and 4 and pedestals 4 and 5 are delaminated and have a deep horizontal crack.

- **Pier #1 (west pier) –** There is heavy spalling to 3" deep for the top 24" by 8' long on the beginning face of the pier capbeam for that portion which extends out from the left column and doesn't support any load . The first pedestal sits over the column so the spalling at this time is not a major concern. The same condition exists on the opposite side of the capbeam but with no spalling and basically all hollowness. Pedestal #1 has some minor cracking on the front (begin) face as does #5 on the right face. There are very fine cracks on the bottom of the

capbeam below ped #5. Rest of capbeam and columns in good condition.

- **Pier #2 (east pier) –** Except for minor cracking on the beginning faces of pedestals #1 & #5 the capbeam and columns are in good condition.

- **East Abutment (End) –** All pedestals show significant deterioration. Signs of significant water infiltration through the joint are present. Pedestals 1, 2, and 3 have significant spalling. Pedestals 1 and 2 have exposed rebar. Pedestals 4 and 5 have delaminated concrete. The back walls have moderate delamination. The abutment between pedestals 3 and 4 have significant delaminationon the bottom half of the abutment.

STRUCTURAL STEEL INSPECTION SUMMARY

BIN 1069142

Special Emphasis Inspection Required
Non-Redundant/Fracture Critical Members – No
Pin and Hangers – No
Fatigue-Prone Welds – Yes
Non-Categorized Fatigue-Prone Details – No
Other (Specified in Text) – No

Special Emphasis Details:
Horizontal gusset plates welded to bottom flanges of girders were inspected as required.

Overall Steel Condition:

Paint: Girders are the weathering steel type so no paint exists to report on, however, read section loss notes below.

Section Loss: The weathering steel is scaling in localized areas, particularly along bottom flanges with the fascia girders in worst condition.
Steel at the abutments showed some moderate scaling at the bottom flanges and the bottom half of the beam webs.

Due to the age of the steel a blanket 5% section loss should be used in load rating.

Girder Conditions: A thin horizontal crack was found in a defective weld between the bottom flange of a girder and the horizontal gusset plate. This occurred on Span #2 in girder #4 in the sixth (6th) gusset plate from the end of the span. NYSDOT was notified on January 28, 2014 about this condition. Except for the cracked weld and section loss outlined above the remaining girders are all in good condition on all spans.

Bearings: Pier #1 bearings are the expansion type with the top Teflon pad delaminating at the edges. Pier #2 fixed bearings appear in good condition.

D95042

FED. ROAD REG. NO.	STATE	FEDERAL AID PROJECT NO.	SHEET NO.	TOTAL SHEETS
1	N.Y.	I-IC(481)-2(74) I-111-81.2(126)	435	571

INTERSTATE ROUTE CONNECTION 571
FOREST INTERCHANGE - JAMESVILLE
ONONDAGA COUNTY

NOTE
Railing not shown.

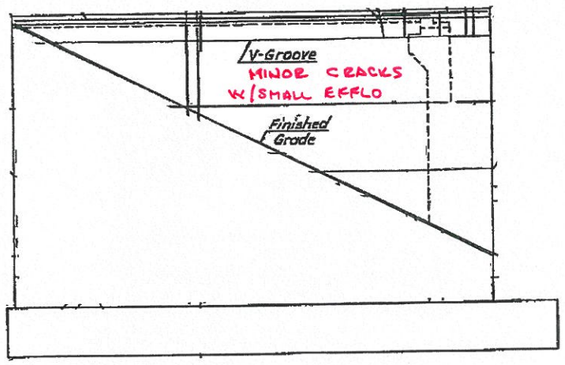

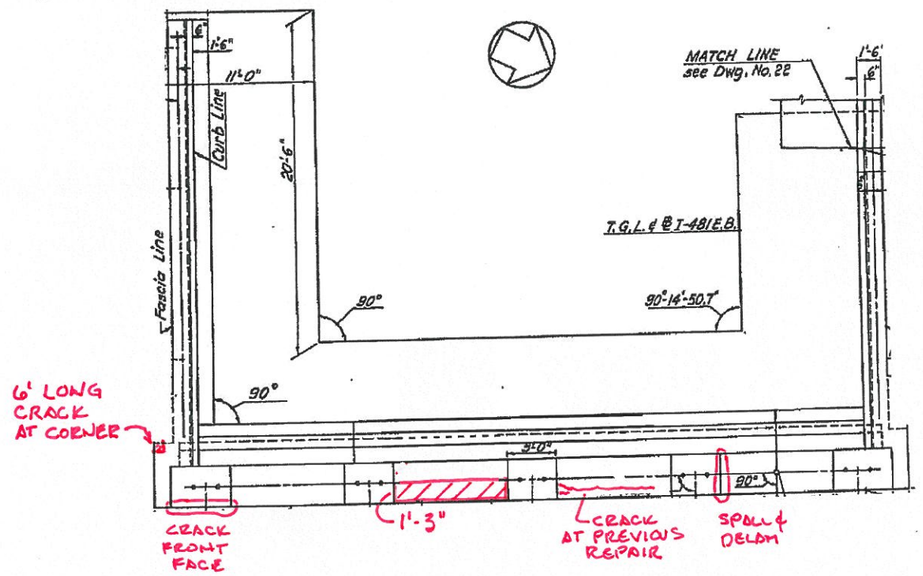

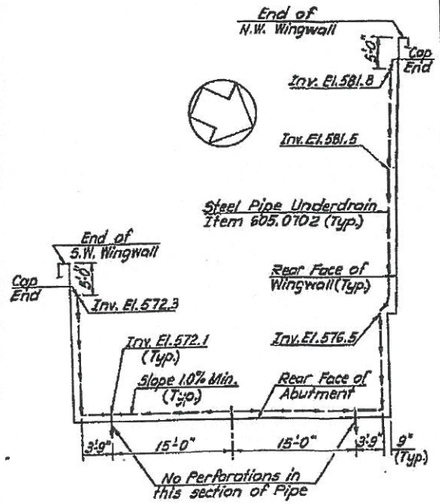

UNDERDRAIN PLAN AND FLOW DIAGRAM
Not to Scale

PLAN
Scale: 1/4"=1'-0"

ELEVATION-SOUTHWEST WINGWALL
Scale: 1/4"=1'-0"

LEGEND

- C-X — CORE LOCATION
- XX — PHOTO LOCATION
- DELAMINATION
- SPALLING
- CRACK
- MAP CRACKING
- MOISTURE

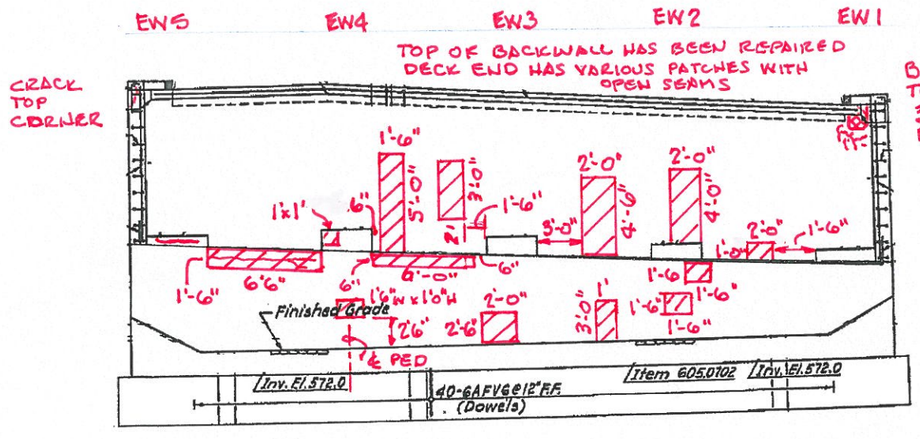

ELEVATION
Scale: 1/4"=1'-0"

NOTES:
1. Invert Elevations shown, are at Front Face of Abutment.
2. ** Construction Joint Elevations shown, are at Front Face of Abutment.
3. *Pedestals shall be constructed to their Plan Elevations only after the Abutments have been built, backfilled to the roadway subgrade, and a two(2) week waiting period observed.

REFERENCES:
1. For Section Q-Q and Header Detail, see Dwg. No. 24.
2. For Section F-F, see Dwg. No. 25.
3. For Footing Reinforcing Plan, Section P-P, Concrete Item Numbers and Quantities in Specific Fours, see Dwg. No. 29.
4. For Safety Walk Reinforcing Plan and Section N-N, see Dwg. No. 30.
5. For Additional Abutment References, see Dwg. No. 18.

Prepared and recommended
J.O. Goodkind
GOODKIND & O'DEA, INC.

Date: 12/1/75
Consulting Engineers

BRIDGE NO. 6

I-481 OVER ERIE-LACKAWANNA RAILROAD

WEST ABUTMENT AND SOUTHWEST WINGWALL - EASTBOUND

DWG. NO.	SCALE	DATE	GOODKIND & O'DEA, INC. CONSULTING ENGINEERS
21	As noted	Nov. 1975	

BIN 1069142

435

D95042

FED. ROAD REG. NO.	STATE	FEDERAL AID PROJECT NO.	SHEET NO.	TOTAL SHEETS.
1	N.Y.	I-IG-481-2(24) I-IG-81-2(128)	448	571

INTERSTATE ROUTE CONNECTION 571
FOREST INTERCHANGE - JAMESVILLE
ONONDAGA COUNTY

LEGEND

- C-X — CORE LOCATION
- XX — PHOTO LOCATION
- DELAMINATION
- SPALLING
- CRACK
- MAP CRACKING
- MOISTURE

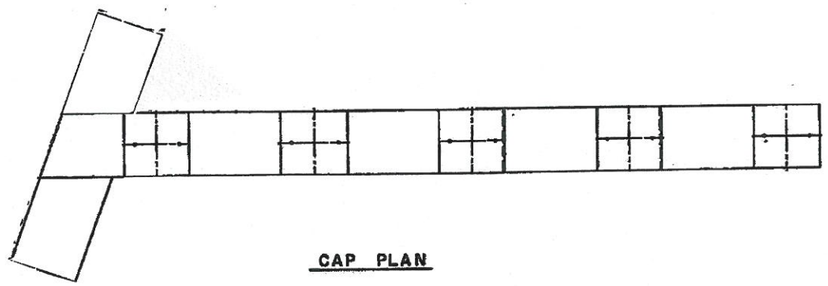

CAP PLAN

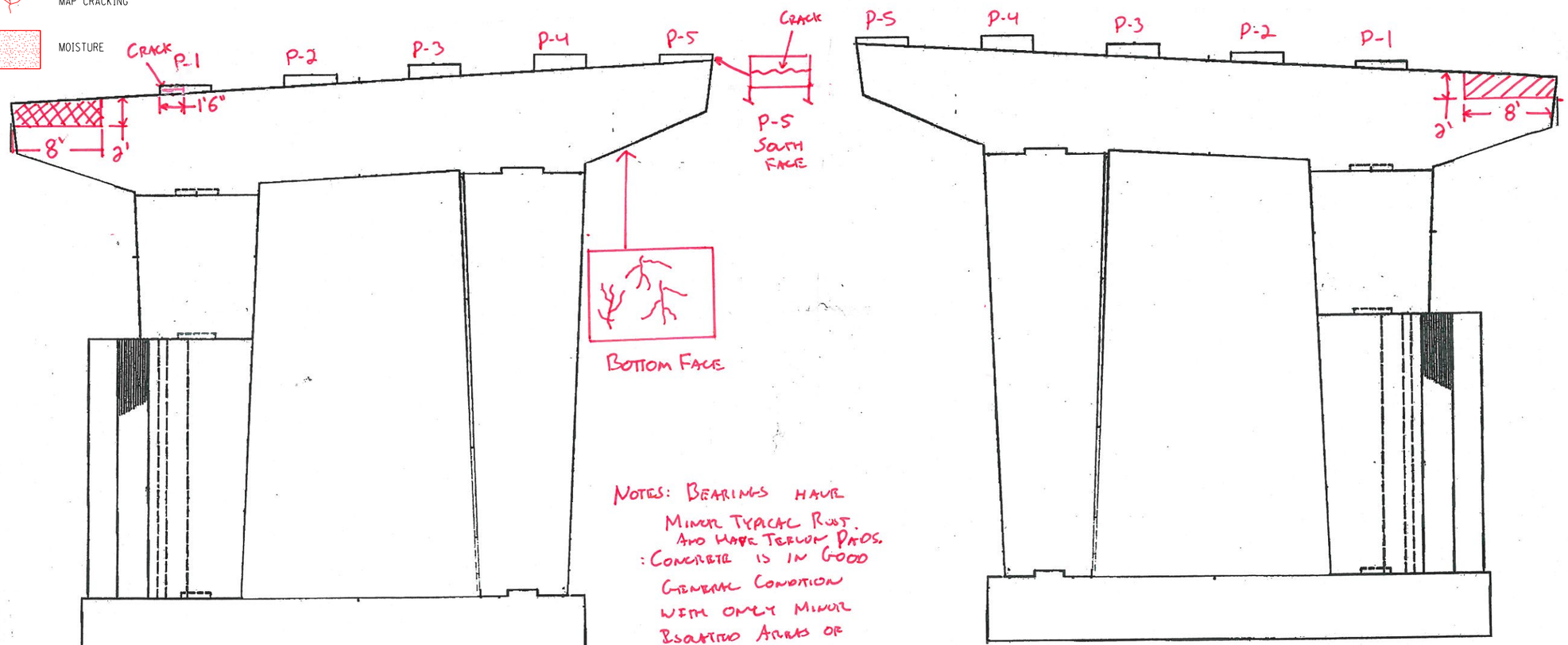

ELEVATION

I-481 OVER ERIE-LACKAWANNA RAILROAD
PIER 1 - EASTBOUND
BIN 1069142

Prepared and recommended GOODKIND & O'DEA, INC. Consulting Engineers
Date 12/1/75

DWG. NO.	SCALE	DATE	GOODKIND & O'DEA, INC. CONSULTING ENGINEERS
54	4"=1'-0"	Nov. 1976	

448

D95042

FED. ROAD REG. NO.	STATE	FEDERAL AID PROJECT NO.	SHEET NO.	TOTAL SHEETS
1	N.Y.	I-IG-481-2(74) I-IG-81-2(128)	449	571

INTERSTATE ROUTE CONNECTION 571
FOREST INTERCHANGE – JAMESVILLE
ONONDAGA COUNTY

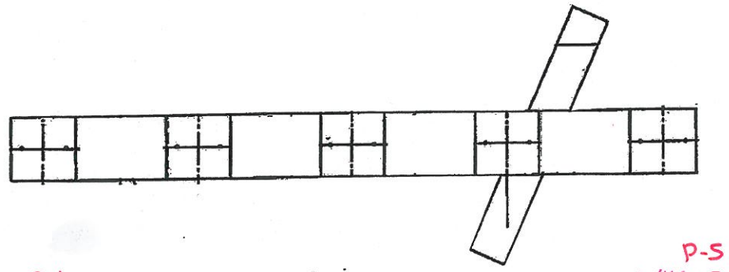

CAP PLAN

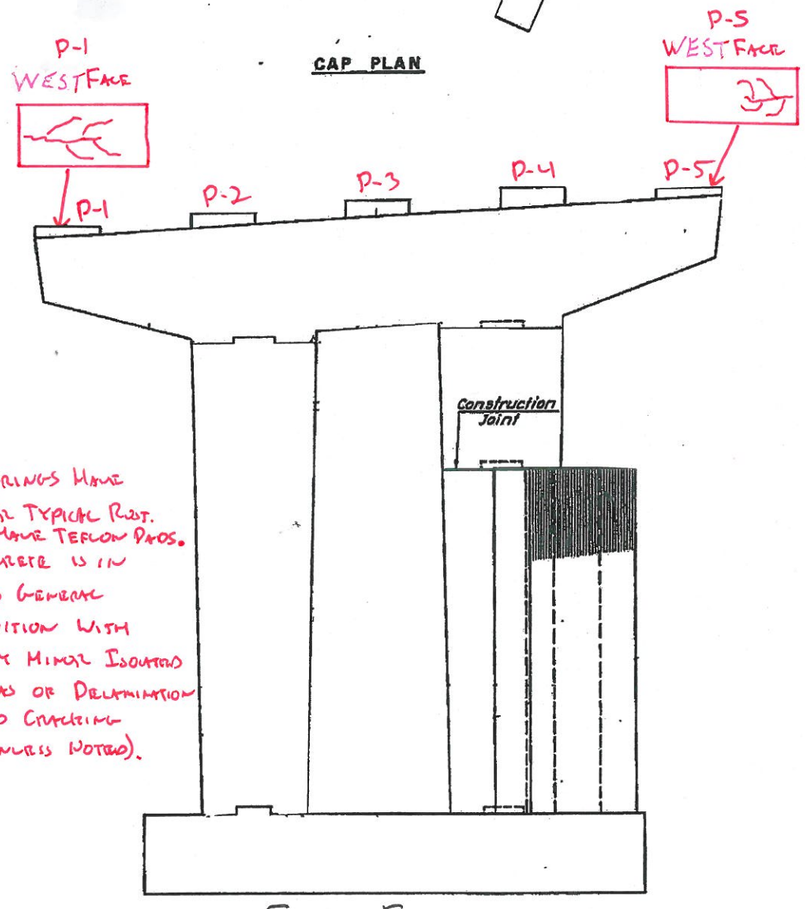

EAST FACE
ELEVATION

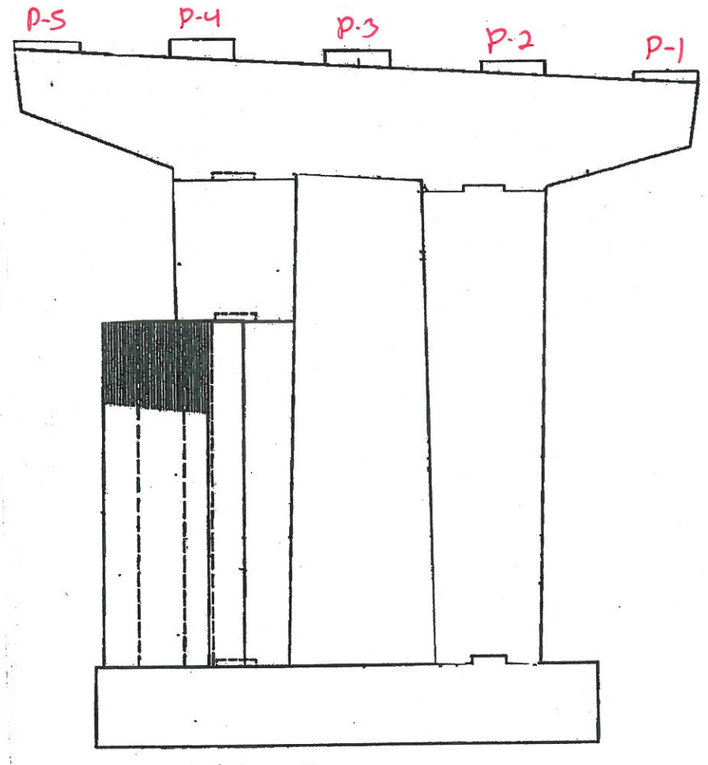

WEST FACE

NOTES: BEARINGS HAVE MINOR TYPICAL RUST. AND HAVE TEFLON PADS.
: CONCRETE IS IN GOOD GENERAL CONDITION WITH ONLY MINOR ISOLATED AREAS OF DELAMINATION AND CRACKING (UNLESS NOTED).

LEGEND

- C-X — CORE LOCATION
- XX — PHOTO LOCATION
- DELAMINATION
- SPALLING
- CRACK
- MAP CRACKING
- MOISTURE

BRIDGE NO.6
I-481 OVER ERIE-LACKAWANNA RAILROAD
PIER 2 – EASTBOUND
BIN 1069142

Prepared and recommended GOODKIND & O'DEA, INC. Consulting Engineers
Date 12/1/75

DWG. NO.	SCALE	DATE	GOODKIND & O'DEA, INC. CONSULTING ENGINEERS
35	4'-1/4"	Nov. 1975	

D95042

FED. ROAD REG. NO.	STATE	FEDERAL AID PROJECT NO.	SHEET NO.	TOTAL SHEETS.
1	N.Y.	I-IC-481-2(74) I-UI-81-2(128)	437	571

INTERSTATE ROUTE CONNECTION 571
FOREST INTERCHANGE – JAMESVILLE
ONONDAGA COUNTY

NOTE:
Railing not shown.

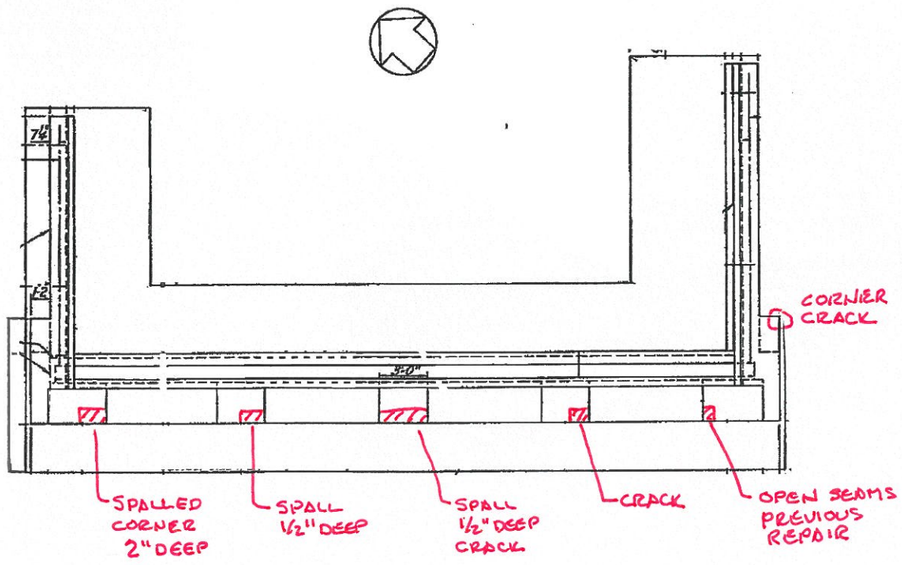

PLAN
Scale: 4"=1'-0"

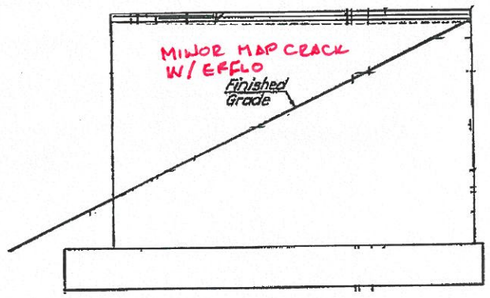

ELEVATION-SOUTHEAST WINGWALL
Scale: 4"=1'-0"

NOTE
Railing not shown.

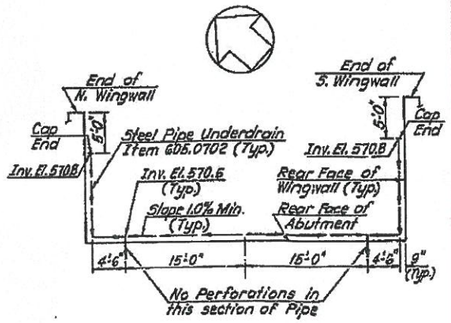

UNDERDRAIN PLAN AND FLOW DIAGRAM
Not to Scale

LEGEND

- C-X — CORE LOCATION
- XX — PHOTO LOCATION
- DELAMINATION
- SPALLING
- CRACK
- MAP CRACKING
- MOISTURE

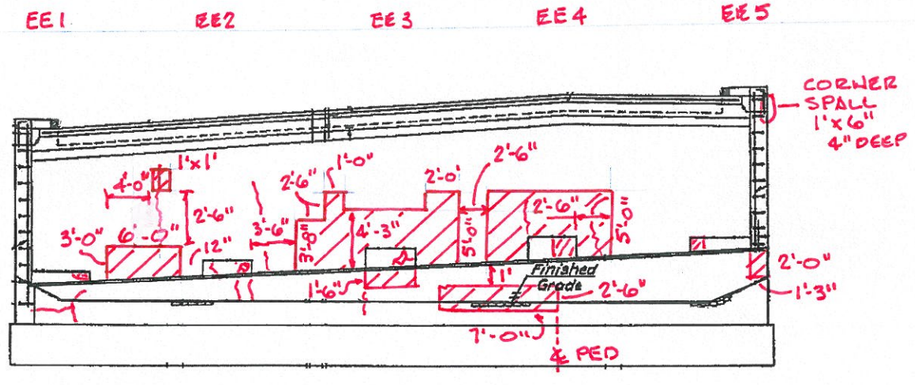

ELEVATION
Scale: 4"=1'-0"

NOTES:
1. Invert Elevations shown, are of Front Face of Abutment.
2. Bridge Seat Elevation shown, is at front Face of Backwall.
3. *Pedestals shall be constructed to their Plan Elevations only after the Abutments have been built, backfilled to roadway subgrade and a two (2) week waiting period observed.

℄ ▽-℄ Construction Joint Elevation shown, is at Front Face of Abutment.

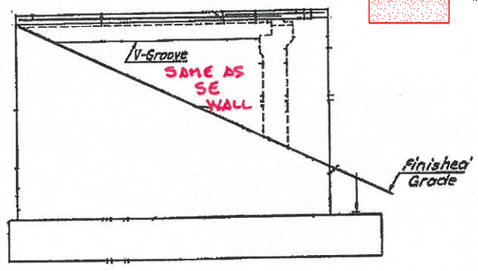

ELEVATION - NORTHEAST WINGWALL
Scale: ¼"=1'-0"

REFERENCES:
1. For Sections G-G, H'-H', M-M and Header Detail, see Dwg. No. 25.
2. For Sections R-R, S-S, Footing Reinforcing Plan, Safety Walk Reinforcing Plan, Concrete Item Numbers and Quantities in Specific Pours, see Dwg. No. 31.
3. For Additional Abutment References, see Dwg. No. 18.

Prepared and recommended
GOODKIND & O'DEA, INC.
Date 12/1/75
Consulting Engineers

BRIDGE NO.6

I-481 OVER ERIE-LACKAWANNA RAILROAD

EAST ABUTMENT-EASTBOUND

DWG. NO.	SCALE	DATE	GOODKIND & O'DEA, INC. CONSULTING ENGINEERS
23	As noted	Nov. 1975	

BIN 1069142

D95042

FED. ROAD REG. NO.	STATE	FEDERAL AID PROJECT NO.	SHEET NO.	TOTAL SHEETS
1	N.Y.	I-IG-481-2(74) I-UI-81-2(128)	456	571

INTERSTATE ROUTE CONNECTION 571
FOREST INTERCHANGE - JAMESVILLE
ONONDAGA COUNTY

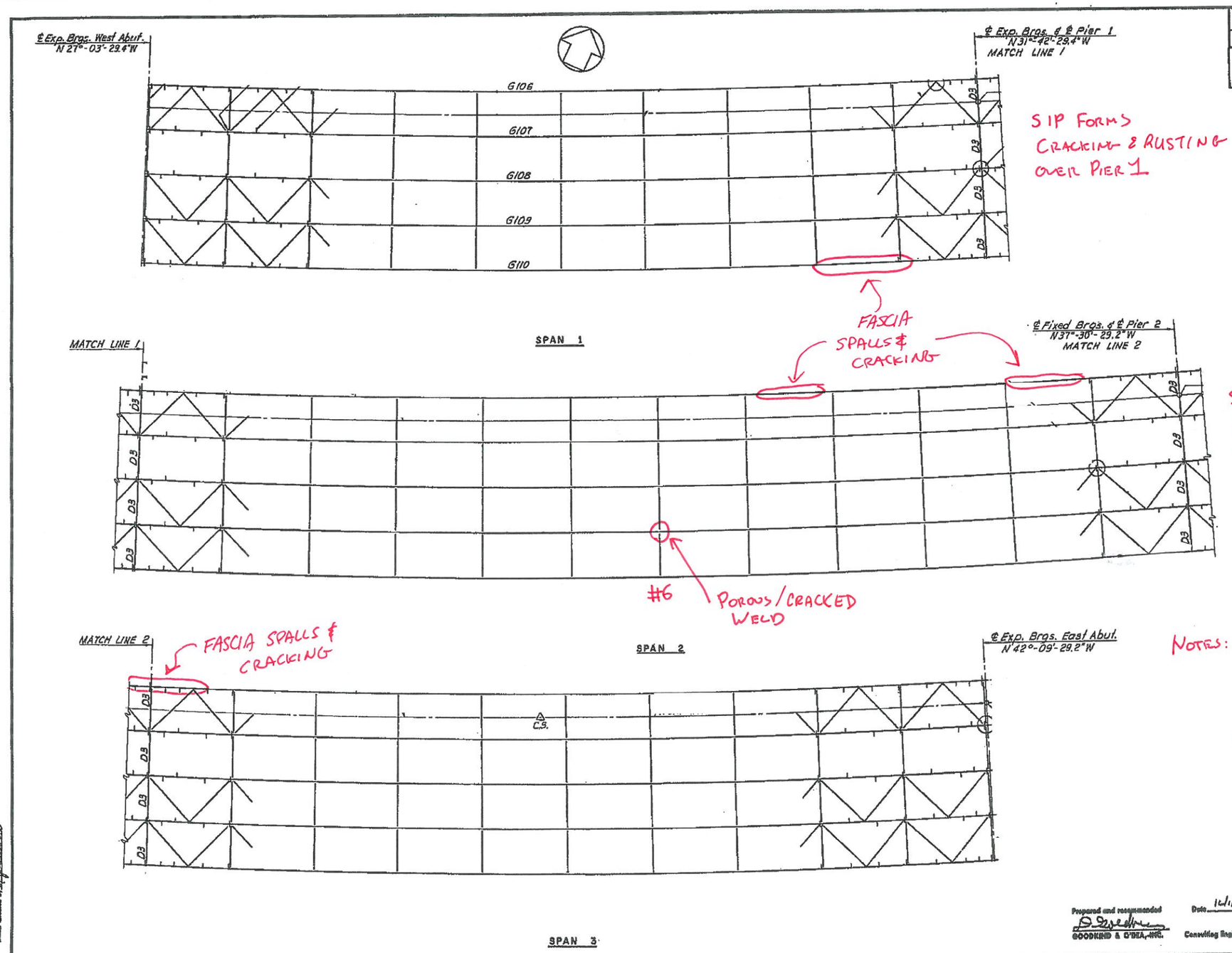

LEGEND

- C-X CORE LOCATION
- XX PHOTO LOCATION
- DELAMINATION
- SPALLING
- CRACK
- MAP CRACKING
- MOISTURE

NOTES: 100% INSPECTION OF GUSSET PLATES PERFORMED. SEE DIAGRAMS FOR FINDINGS.

: PAINT CONDITION => SCALING ON THE BOTTOM FLANGES AND FACIAS

BIN 1069142

BRIDGE NO.6

I-481 OVER ERIE-LACKAWANNA RAILROAD

FRAMING PLAN - EASTBOUND

Prepared and recommended
GOODKIND & O'DEA, INC.
Date 10/1/75
Consulting Engineers

DWG. NO.	SCALE	DATE	
42	1"=10'	Nov. 1975	GOODKIND & O'DEA, INC. CONSULTING ENGINEERS

In Charge of O.P. Bunsiman
Designed by D.B. Crisbell
Design Checked by J.M. Kondowire
Detailed by L. Volkoff
Detail Checked by [illegible]

IN-DEPTH PHOTO DOCUMENTATION

C&S Engineers, Inc.
499 Col. Eileen Collins Blvd.
Syracuse, New York 13212
Phone: (315) 455-2000
Fax: (315) 455-9667
www.cscos.com

I-481 NB over NY S&W RR - BIN 1069142



DESCRIPTION: BRIDGE STRUCTURE LEFT-LOOKING END TO BEGIN

PHOTO 1



DESCRIPTION: BEGIN (WEST) ABUTMENT–LOOKING END TO BEGIN

PHOTO 2

C&S Engineers, Inc.
499 Col. Eileen Collins Blvd.
Syracuse, New York 13212
Phone: (315) 455-2000
Fax: (315) 455-9667
www.cscos.com

I-481 NB over NY S&W RR - BIN 1069142



DESCRIPTION: BEGIN (WEST) ABUTMENT – BACKWALL SPALL NEXT TO LEFT WINGWALL

PHOTO 3



DESCRIPTION: BEGIN (WEST) ABUTMENT – PEDESTAL 1 – TYPICAL BEARING

PHOTO 4

C&S Engineers, Inc.
499 Col. Eileen Collins Blvd.
Syracuse, New York 13212
Phone: (315) 455-2000
Fax: (315) 455-9667
www.cscos.com

I-481 NB over NY S&W RR - BIN 1069142



DESCRIPTION: BEGIN (WEST) ABUTMENT – PEDESTAL 2 – HOLLOWED CONCRETE AND CRACKING

PHOTO 5



DESCRIPTION: BEGIN (WEST) ABUTMENT – BELOW PEDISTAL 3–DELAMINATED CONCRETE

PHOTO 6

C&S Engineers, Inc.
499 Col. Eileen Collins Blvd.
Syracuse, New York 13212
Phone: (315) 455-2000
Fax: (315) 455-9667
www.cscos.com

I-481 NB over NY S&W RR - BIN 1069142



DESCRIPTION: BEGIN (WEST) ABUTMENT – CRACKING IN STEM BETWEEN PEDESTALS 4 & 5

PHOTO 7



DESCRIPTION: BEGIN (WEST) ABUTMENT – CRACKING IN STEM BETWEEN PEDESTALS 4 & 5

PHOTO 8

C&S Engineers, Inc.
499 Col. Eileen Collins Blvd.
Syracuse, New York 13212
Phone: (315) 455-2000
Fax: (315) 455-9667
www.cscos.com

I-481 NB over NY S&W RR - BIN 1069142



DESCRIPTION: BEGIN (WEST) ABUTMENT – CRACKING IN STEM BELOW PEDESTAL 5

PHOTO 9



DESCRIPTION: BEGIN (WEST) ABUTMENT – BACKWALL SPALL NEXT TO RIGHT WINGWALL

PHOTO 10

C&S Engineers, Inc.
499 Col. Eileen Collins Blvd.
Syracuse, New York 13212
Phone: (315) 455-2000
Fax: (315) 455-9667
www.cscos.com

I-481 NB over NY S&W RR - BIN 1069142



DESCRIPTION: BEGIN (WEST) ABUTMENT – WING WALL RIGHT - TYPICAL CONDITION

PHOTO 11



DESCRIPTION: PIER 1 –GENERAL CONFIGURATION-HORIZONTAL GUSSET PLATE WELDED TO BOTTOM FLANGES (TYPICAL) - VIEWED FROM BEGIN

PHOTO 12

C&S Engineers, Inc.
499 Col. Eileen Collins Blvd.
Syracuse, New York 13212
Phone: (315) 455-2000
Fax: (315) 455-9667
www.cscos.com

I-481 NB over NY S&W RR - BIN 1069142



DESCRIPTION: PIER 1- SPALLING IN EXTENTION OF CAPBEAM ON LEFT SIDE. VIEWED FROM BEGINNING FACE

PHOTO 13



DESCRIPTION: PIER 1 – MINOR CRACKING IN PEDESTAL 1 – VIEWED FROM BEGIN LEFT

PHOTO 14

C&S Engineers, Inc.
499 Col. Eileen Collins Blvd.
Syracuse, New York 13212
Phone: (315) 455-2000
Fax: (315) 455-9667
www.cscos.com

I-481 NB over NY S&W RR - BIN 1069142



DESCRIPTION: PIER 1 – BEARING 2 – TYPICAL PIER EXPANSION BEARING – VIEWED FROM BEGINNIG

PHOTO 15



DESCRIPTION: PIER 1 – STAINING AND HOLLOWNESS IN EXTENSION OF CAPBEAM – VIEWED FROM END LEFT

PHOTO 16

C&S Engineers, Inc.
499 Col. Eileen Collins Blvd.
Syracuse, New York 13212
Phone: (315) 455-2000
Fax: (315) 455-9667
www.cscos.com

I-481 NB over NY S&W RR - BIN 1069142



DESCRIPTION: PIER 1 – RUST THRUS IN VALLEYS OF SIP FORMS – THIS ONLY OVER PIER 1 – VIEWED FROM BEGIN TO END

PHOTO 17

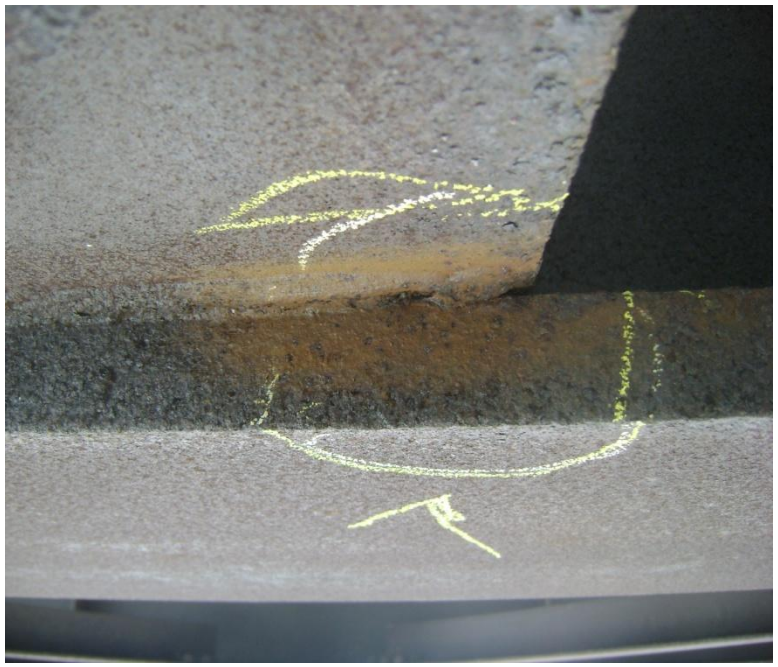

DESCRIPTION: SPAN 2 – CRACK FOUND IN WELD BETWEEN GUSSET PLATE & FLANGE IN G-4 @ 6TH PLATE FROM END- VIEWED FROM LEFT SIDE

PHOTO 18

C&S Engineers, Inc.
499 Col. Eileen Collins Blvd.
Syracuse, New York 13212
Phone: (315) 455-2000
Fax: (315) 455-9667
www.cscos.com

I-481 NB over NY S&W RR - BIN 1069142



DESCRIPTION: SPAN 2 – RIGHT FASCIA GIRDER – SCALING OF GIRDER – TYPICAL – VIEWED FROM BEGIN TO END

PHOTO 19



DESCRIPTION: PIER 2 – GENERAL CONFIGURATION – VIEWED FROM BEGINNING

PHOTO 20

C&S Engineers, Inc.
499 Col. Eileen Collins Blvd.
Syracuse, New York 13212
Phone: (315) 455-2000
Fax: (315) 455-9667
www.cscos.com

I-481 NB over NY S&W RR - BIN 1069142



DESCRIPTION: PIER 2 – PEDESTAL 1 – MINOR CRACKING – VIEWED FROM BEGINNING

PHOTO 21



DESCRIPTION: PIER 2 – BEARING 4 – FIXED BEARING - VIEWED FROM BEGIN LEFT – TYPICAL BRIDGE FIXED BEARING - PIER 2 ONLY

PHOTO 22

C&S Engineers, Inc.
499 Col. Eileen Collins Blvd.
Syracuse, New York 13212
Phone: (315) 455-2000
Fax: (315) 455-9667
www.cscos.com

I-481 NB over NY S&W RR - BIN 1069142



DESCRIPTION: PIER 2 – BEGIN VIEW – CRACK IN PEDESTAL 5 – RIGHT FASCIA PEDESTAL

PHOTO 23



DESCRIPTION: SPAN 3 – LEFT SIDE – TYPICAL SPALLING IN FASCIA – VIEWED FROM END TOWARD PIER 2

PHOTO 24

C&S Engineers, Inc.
499 Col. Eileen Collins Blvd.
Syracuse, New York 13212
Phone: (315) 455-2000
Fax: (315) 455-9667
www.cscos.com

I-481 NB over NY S&W RR - BIN 1069142



DESCRIPTION: SPAN 3 – RIGHT FASCIA GIRDER, G-5 – TYPICAL SCALLING OF GIRDERS – VIEWED FROM BEGIN TO END

PHOTO 25



DESCRIPTION: END ABUTMENT (EAST) – GENERAL VIEW

PHOTO 26

C&S Engineers, Inc.
499 Col. Eileen Collins Blvd.
Syracuse, New York 13212
Phone: (315) 455-2000
Fax: (315) 455-9667
www.cscos.com

I-481 NB over NY S&W RR - BIN 1069142



DESCRIPTION: END ABUTMENT – PEDESTAL 1 – SPALLS & CRACKING OF PEDESTAL

PHOTO 27



DESCRIPTION: END ABUTMENT – PEDESTAL 2 – SPALLING AND SURROUDING HOLLOWNESS

PHOTO 28

C&S Engineers, Inc.
499 Col. Eileen Collins Blvd.
Syracuse, New York 13212
Phone: (315) 455-2000
Fax: (315) 455-9667
www.cscos.com

I-481 NB over NY S&W RR - BIN 1069142



DESCRIPTION: END ABUTMENT – PEDESTAL 3 – SPALLS AND SURROUNDING HOLLOWNESS

PHOTO 29



DESCRIPTION: END ABUTMENT – HOLLOWNESS BETWEEN PEDESTALS 3 & 4 – VIEWED FROM LEFT OF PEDESTAL 4

PHOTO 30

C&S Engineers, Inc.
499 Col. Eileen Collins Blvd.
Syracuse, New York 13212
Phone: (315) 455-2000
Fax: (315) 455-9667
www.cscos.com

I-481 NB over NY S&W RR - BIN 1069142



DESCRIPTION: END ABUTMENT – PEDESTAL 5 – LOCALIZED MAP CRACKING AND STAINS

PHOTO 31



DESCRIPTION: END ABUTMENT (EAST) – TYPICAL END WINGWALL – CRACKS AND SPALLING AT TOP

PHOTO 32

C&S Engineers, Inc.
499 Col. Eileen Collins Blvd.
Syracuse, New York 13212
Phone: (315) 455-2000
Fax: (315) 455-9667
www.cscos.com

I-481 NB over NY S&W RR - BIN 1069142



DESCRIPTION: STRUCTURE DECK LOOKING END TO BEGIN

PHOTO 33

DESCRIPTION:

PHOTO

B/N 1069141

I 481 EB/NB / NYS & W RR

D95042

FED. ROAD REG. NO.	STATE	FEDERAL AID PROJECT NO.	SHEET NO.	TOTAL SHEETS
1	N.Y.	I-IG-481-2(74) I-UI-81-2(283)	456	571

INTERSTATE ROUTE CONNECTION 571
FOREST INTERCHANGE - JAMESVILLE
ONONDAGA COUNTY

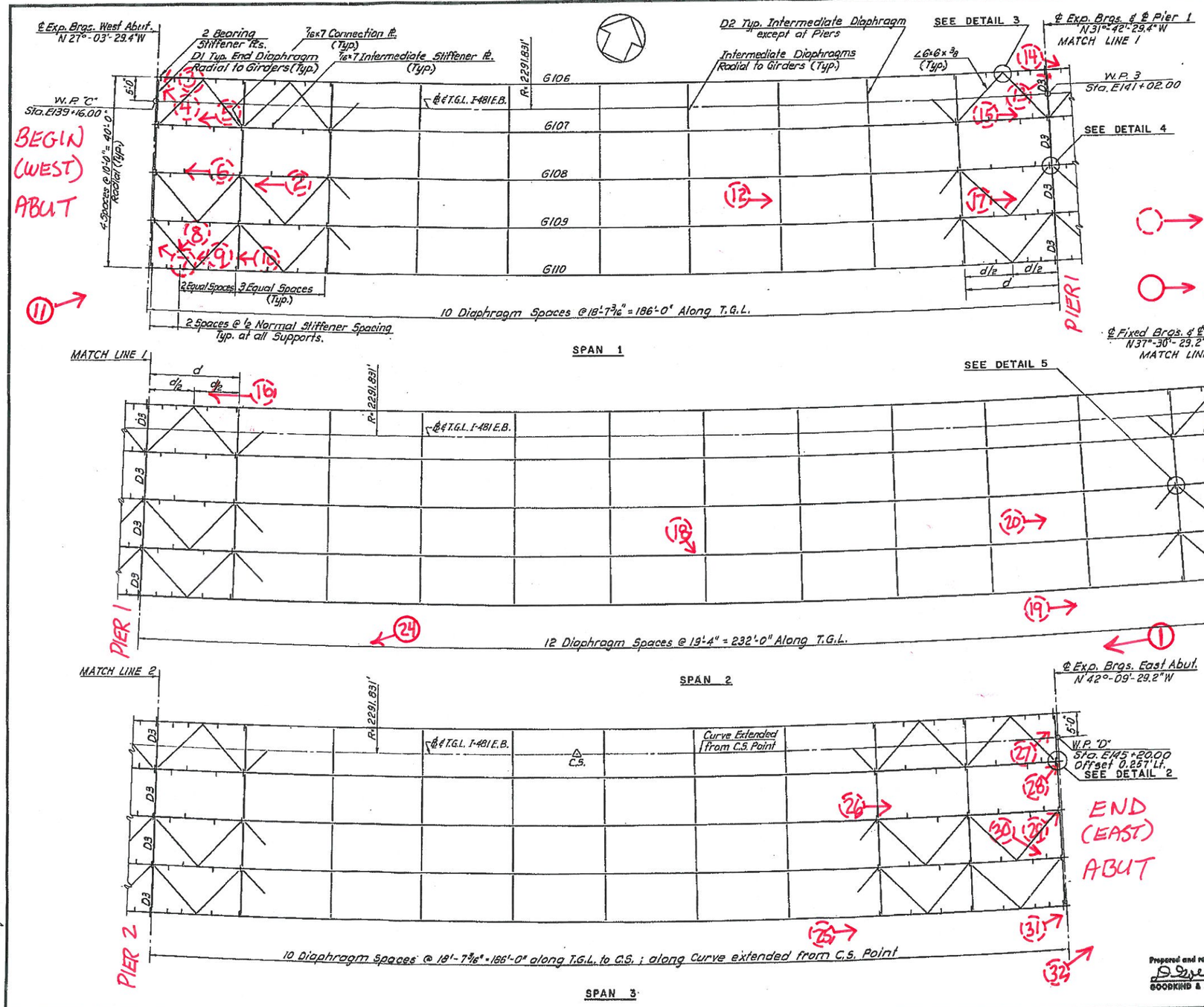

○ → INDICATES PHOTO WAS TAKEN BELOW BRIDGE DECK

○ → INDICATES PHOTO WAS TAKEN ABOVE BRIDGE DECK

REFERENCES:
1. For Details 2 through 5, see Dwg. No. 45.
2. For Additional References, see Dwg. No. 41.

PHOTO LOCATION PLAN

BRIDGE NO. 6

I-481 OVER ERIE-LACKAWANNA RAILROAD

FRAMING PLAN - EASTBOUND

Prepared and recommended
GOODKIND & O'DEA, INC.
Consulting Engineers

Date 12/1/75

DWG. NO.	SCALE	DATE	GOODKIND & O'DEA, INC. CONSULTING ENGINEERS
42	1"=10'	Nov. 1975	

In Charge of J.P. Donahue
Designed by P.B.C. / S.E.H.
Drafted by L. Yokoyama
Detail Checked by W.A.S. / J.T.F.

456

ASBESTOS DOCUMENTATION

Asbestos Sampling Survey

Location:

BIN 1069142
Interstate Route I-481 North Bound
over CSX Railroad

Prepared for:

New York State
Department of Transportation

PIN 3056.13.111

LaBella Project No. 201001

August 2001

Table of Contents

Page

I. Project Summary 1

II. Site Description 1

III. Inspection Procedures 1

IV. Results 2

Certification 2

Figures and Table

I. Project Summary

In accordance with conditions of Term Agreement D012606, LaBella Associates, P.C. conducted an asbestos sampling survey of the Interstate Route I-481 north bound bridge over CSX Railroad. Based on laboratory analyses of bulk samples collected, no asbestos-containing materials were identified.

II. Site Description

The Site is located in Onondaga County, New York. For the purpose of this report, the Site consists of the Interstate Route I-481 north bound bridge over CSX Railroad. (See attached FIGURE 1 - Site Location Map).

III. Inspection Procedures

The following procedures were used to obtain the data for this Report:

A. A review of record drawings supplied by Region 3 personnel and a visual inspection of the subject structure were conducted to identify potential visible/accessible sources of asbestos-containing materials. Observations and notes were made to provide a description of the structure, and an estimate of the approximate amount, length, or area of ACM present.

B. Physical or operational constraints, which might affect the removal of the ACM, were identified and reported.

C. Bulk samples of suspected ACM were collected during the site inspection of the subject structure. Samples were taken from each homogeneous area that may contain ACM.

D. Samples were submitted for analysis. Preliminary PLM analyses of NOB materials were performed by LaBella Laboratories, a NYSDOH approved laboratory, to determine the presence and percentage of asbestos in each sample. TEM analyses of NOB materials, if necessary, were performed by AMA Analytical, Inc.

E. Lab results were used to determine the approximate location, type, and amount of the verified ACM.

F. A drawing of the structure at the Site was created, in order to show sample locations and the approximate locations and amounts of confirmed ACM observed in accessible locations.

Only accessible areas were inspected. Inaccessible areas, such as areas within the bridge or the approaches to the bridge were not included in this inspection. No investigation was conducted by LaBella Associates to determine the presence of underground utilities on or in the immediate vicinity of the Site. Actual sample locations are shown in the attached FIGURE 2. Results of bulk sample analyses are tabulated in the attached TABLE.

IV. Results

BIN 1069142 Interstate Route I-481 North Bound over CSX Railroad

Based on laboratory analyses of bulk samples collected, no asbestos-containing materials were identified.

Certification

LaBella Associates, P.C. certifies the accuracy of this report, to the best of our knowledge, based on the information collected as described in the Inspection Procedures Section of this investigation.

Figures & Table

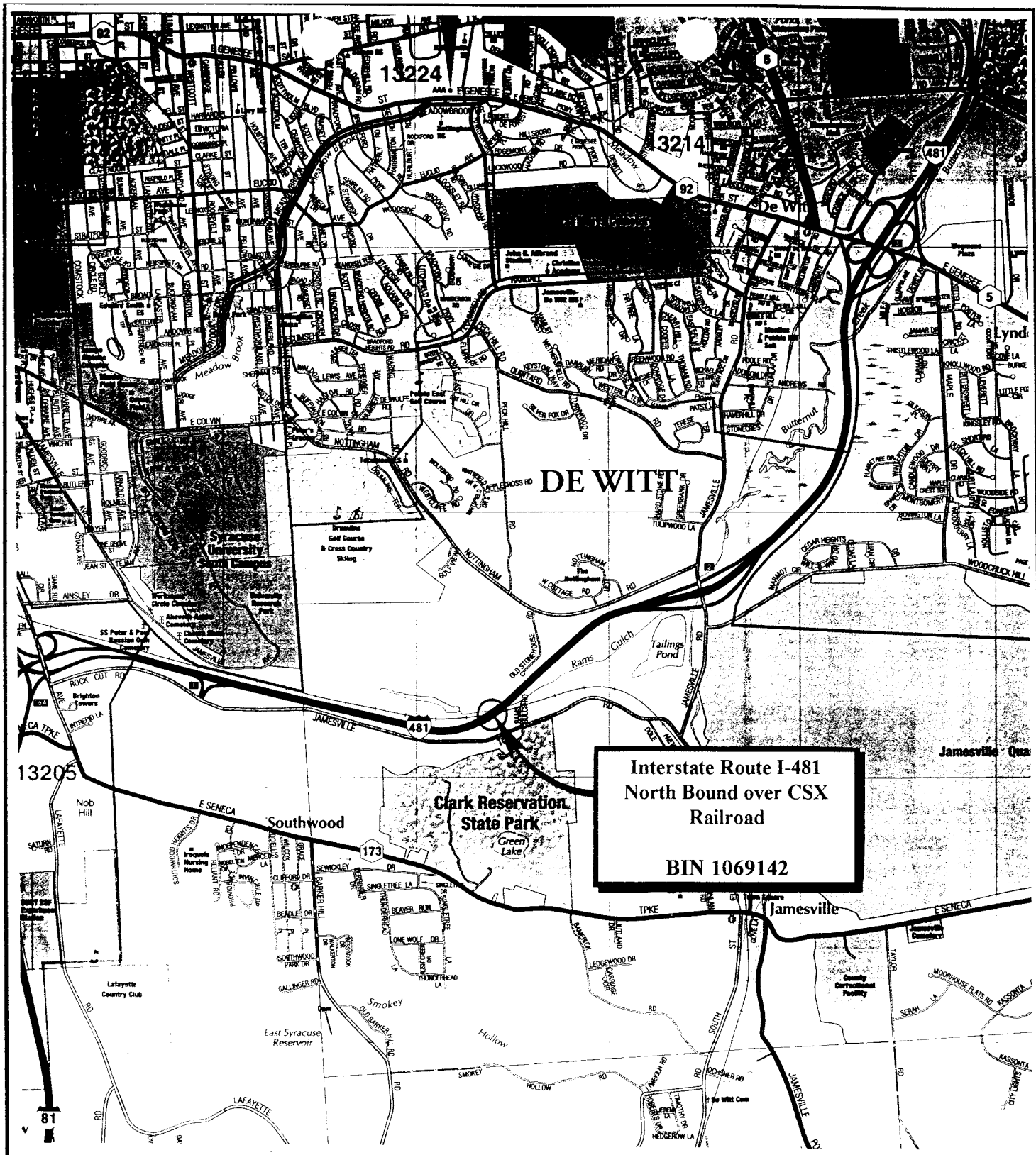

FIGURE 1
Site Location Map

Interstate Route I-481 North Bound over CSX Railroad
Onondaga County, New York

LABELLA

PROJECT NO. 201001

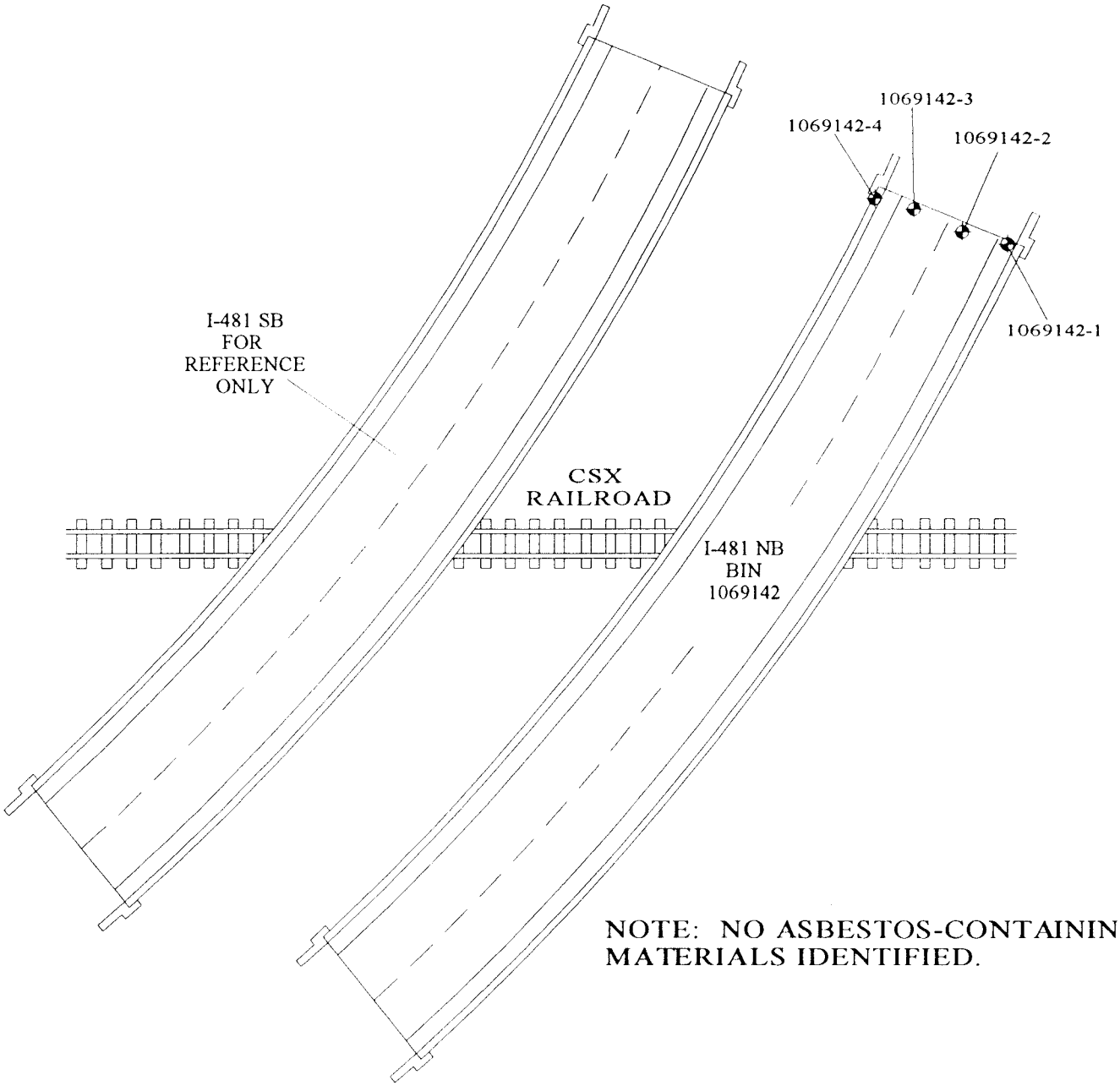

NOTE: NO ASBESTOS-CONTAINING MATERIALS IDENTIFIED.

LEGEND

◆ 1069142-1 SAMPLE LOCATION

NORTH

PROJECT TITLE: ASBESTOS SAMPLING SURVEY
19 BRIDGES ALONG INTERSTATE I-481
ONONDAGA COUNTY, NEW YORK

PROJECT NO. 201001

PIN 3056.13.111

FIGURE TITLE: FIGURE 2 BIN 1069142
I-481 NB OVER CSX RAILROAD
SAMPLE LOCATIONS &
CONFIRMED ACM

NOT TO SCALE

DATE: AUGUST, 2001

Bulk Sample Results Table

Asbestos Sampling Survey
BIN 1069142
Interstate Route I-481 North Bound
over CSX Railroad
Onondaga County, New York
LaBella Project # 201001
PIN 3056.13.111

Sample #	Sample Location	Type of Material	Results % Asbestos	Amount of Material	Specification Item No.
1069142-1	East End of Bridge in Expansion Joint	Joint Repair Material	None Detected	N/A	N/A
1069142-2	East End of Bridge Beneath Bearing	Bearing Pad	None Detected	N/A	N/A
1069142-3	East End of Bridge on Pedestal	Gray Masonry Coating	None Detected	N/A	N/A
1069142-4	East End of Bridge on I-Beam	White Caulking Compound	None Detected	N/A	N/A

ASBESTOS DOCUMENTATION FROM WATTS ARCHITECTURE & ENGINEERING, INC.

NEW YORK STATE
DEPARTMENT OF TRANSPORTATION
D031085 P.I.N 3501.60

LEVEL 1 LOAD RATING
B.I.N. 1069142
I-481 Northbound over NYS&W Railroad

LOAD RATING SUMMARY TABLE (LOAD FACTOR)				
CONTROLLING MEMBER	**CONTROLLING PARAMETER**	**LIVE LOAD**	**INVENTORY RATING**	**OPERATING RATING**
SPAN 1 EXTERIOR GIRDER G110	FLEXURE	HS20-44	HS 40.6 (73.0 TONS)	HS 67.8 (122.0 TONS)
SPAN 3 EXTERIOR GIRDER G110	FLEXURE	ALTERNATE MILITARY LOADING	3.2 (76.8 TONS)	5.4 (129.6 TONS)

DOES NOT INCLUDE FUTURE WEARING COURSE

ANALYSIS METHOD:LOAD FACTOR

RECOMMENDED POSTING AS-IS CONDITION: _____ Tons __X__ None

CALCULATED BY:



DATE: 4/02/15

QUALITY ASSURANCE BY:



DATE: 4/01/15

ENGINEERS
DESIGN BUILD
TECHNICAL RESOURCES
OPERATIONS

C&S Companies

C&S Engineers, Inc.
Syracuse Hancock International Airport
Syracuse, NY 13212
phone 315-455-2000
fax 315-455-9667
www.cscos.com

TECHNICAL MEMORANDUM

TO: FILE (190.514.001)

FROM: JESSICA S. BAUER, P.E.
NYSPE 084915

DATE: FEBRUARY 24, 2014

C&S PROJECT NO.: 190.514.001

RE: SEISMIC ASSESSMENT SUMMARY
NEW YORK STATE DEPARTMENT OF TRANSPORTATION
D031085; PIN 3501.60; I-81

BIN: 1069142 Seismic Assessment

This memorandum summarizes the seismic assessment conducted for BIN 1069142 as part of the Interstate 81 Project in Syracuse, NY. The purpose of the assessment is to determine if seismic retrofits are warranted at the superstructure to substructure connection, and if further seismic evaluation of the structure is required. This memorandum will give the assessment results, retrofits required and recommendations for further seismic evaluation of the structure.

ASSESSMENT PROCEDURE

The seismic assessment was performed in accordance with the FHWA Seismic Retrofitting Manual for Highway Structures: Part 1 - Bridges, January 2006. As per the referenced manual, seismic assessment was performed for both lower level and upper level earthquake ground motion. The lower level earthquake ground motion has a reasonable likelihood of occurrence within the life of the bridge (50% probability of exceedance within a 75 year bridge life). The upper level earthquake ground motion has a finite likelihood of occurrence within the life of the bridge (7% probability of exceedance within a 75 year bridge life).

Values for the spectral acceleration for the Syracuse area used in the assessment are as follows:

- Lower Level Earthquake Ground Motion for a Short Period (0.2 seconds): $S_S = 0.0251$
- Lower Level Earthquake Ground Motion for a Long Period (1.0 seconds): $S_1 = 0.0076$
- Upper Level Earthquake Ground Motion for a Short Period (0.2 seconds): $S_S = 0.139$
- Upper Level Earthquake Ground Motion for a Long Period (1.0 seconds): $S_1 = 0.047$

These values are considered constant and are the same for all seismic assessments of bridges in the Syracuse area.

The Site Class is based on the soil conditions at the bridge location. It was determined that this parameter has little effect on the results of the seismic assessment because the spectral

You created this PDF from an application that is not licensed to print to novaPDF printer (http://www.novapdf.com)

acceleration values for the Syracuse area are small. Based on this, a site class of D was used for all seismic assessments of bridges in the Syracuse area.

Bridge parameters used in the seismic assessment were retrieved from the record drawings and WinBolts data.

The seismic assessment takes into account the anticipated service life, importance, and the seismic exposure of the bridge to determine a seismic retrofit category (SRC). The SRC is then used to determine seismic evaluation methods and retrofit measures. There are four SRCs, A through D. Seismic retrofit category A is the lowest category; bridges in this category do not require retrofits or further seismic evaluation. Seismic retrofit category D is the highest category; bridges in this category requiring the most rigorous seismic evaluations and retrofits.

ASSESSMENT RESULTS

The SRC for the bridge is "**C**" for lower level earthquake ground motion and "**B**" for upper level earthquake ground motion.

RETROFITS REQUIRED

Bearing replacements are not required at the abutments or piers. Seat width improvements are required at the abutments. Additional retrofits may be required if further seismic evaluation is needed.

RECOMMENDATIONS FOR FURTHER SEISMIC EVALUATION

For the lower level earthquake ground motion, it is recommended that capacity/demand ratios for bridge components are calculated as per Section 5.4 of the referenced manual. For the upper level earthquake ground motion, it is recommended that the capacities of the bearings are checked as per Section 5.2 of the referenced manual.

Retrofit cost estimates will be provided after any further required seismic evaluations are completed.

You created this PDF from an application that is not licensed to print to novaPDF printer (http://www.novapdf.com)

ENGINEERS
DESIGN BUILD
TECHNICAL RESOURCES
OPERATIONS

C&S Engineers, Inc.
Syracuse Hancock International Airport
Syracuse, NY 13212
phone 315-455-2000
fax 315-455-9667
www.cscos.com

TECHNICAL MEMORANDUM

TO: **FILE (190.514.001)**

FROM: **PAUL BYRNE, P.E.**
NYSPE 055928

DATE: **APRIL 2, 2015**

C&S PROJECT NO.: 190.514.001

RE: **NEW YORK STATE DEPARTMENT OF TRANSPORTATION**
D031085; PIN 3501.60; I-81 Opportunities, BIN 1069142 Fatigue Evaluation

---

This memorandum documents a fatigue evaluation conducted for the existing Interstate 81 Viaduct Project. Existing structures with AASHTO Category D, E, and E' fatigue-prone details require 100% hands-on inspection unless proven to be exempt. The purpose of the evaluation is to assess the remaining life of fatigue-prone components.

EVALUATION PROCEDURES

The fatigue evaluation was performed in accordance with the AASHTO Guide Specification for Fatigue Evaluations of Existing Steel Bridges, 1990. Fatigue-prone welds identified in the biennial inspection reports were located on record drawings and confirmed visually in the field. Additional information concerning fatigue-prone welds located in BIN folders was also obtained and reviewed prior to inspection.

EVALUATION RESULTS

The results of the fatigue evaluation of the controlling span (Span 2) of the existing bridge are shown below. The remaining safe fatigue life of the fatigue component for girder G105 at midspan of span 2 has been **exhausted.**

Fatigue Detail Location	Remaining Safe Fatigue Life (Years)	Remaining Mean Fatigue Life (Years)
Span 2, Exterior Girder G106, Gusset Plate at Bottom Flange, Midspan	8.32	115.00
Span 2, Interior Girder G107, Gusset Plate at Bottom Flange, Midspan	46.65	303.60
Span 2, Interior Girder G108, Gusset Plate at Bottom Flange, Midspan	136.37	745.08
Span 2, Interior Girder G109, Gusset Plate at Bottom Flange, Midspan	38.10	261.54
Span 2, Exterior Girder G110, Gusset Plate at Bottom Flange, Midspan	-0.34	72.40

E. Recommendations:

The purpose of this deck evaluation is to document and determine existing conditions of the deck. It will be used as a tool for developing the scope of work and cost estimates for the development and comparison of alternatives for the overall project.

The total damaged area is less than 1% of the total deck area. Due to the age, condition and high chloride-ion content of the bridge deck concrete, the bridge deck should be rehabilitated or replaced to meet current standards and to mitigate excessive future maintenance costs.

Option 1 – Scarify and Bridge Deck Overlay

The maximum service life this option would provide is 25 years. The design life of this project is 30 years (ETC +30). This option does not meet the project objectives of obtaining 30+ years of service life.

Option 2 – Bridge Deck Rehabilitation with 100% Deep Removal

This option will involve partial depth reconstruction with top mat rebar exposure of the entire bridge deck to remove chloride-ion contaminated concrete (100% deep removal). The existing bridge deck thickness is 9 ¼" with 3" of concrete cover over the top mat of reinforcing. The proposed partial depth reconstruction will include the addition of ¼" of concrete to provide the standard 9 ½" bridge deck thickness. The existing top mat of reinforcing bars will be removed and replaced with standard 3" of concrete cover. The existing non-conforming bridge railing will be removed and replaced with single-slope concrete barrier. The existing approach slabs will receive the same repair treatment as the deck. The existing bridge joints will be replaced with armorless bridge joints. This option would provide a service life of 35 years to the bridge deck. The construction cost of this option is $1.97 million.

Option 3 – Bridge Deck Replacement with Cast-In-Place Concrete

This option will involve the complete demolition of the existing bridge deck, 2-rail bridge railing, bridge deck joints and approach slabs. The bridge deck will be replaced with a new concrete deck, new single-slope concrete barrier and new armorless bridge joints. The approach slabs will also be replaced under this option. The new bridge deck would have a 9 ½" standard thickness as compared to the 9 ¼" existing thickness. This option would provide a service life of 40 years to the bridge deck. The construction cost of this option is $2.43 million.

Option 4 – Bridge Deck Replacement with Pre-cast Concrete Deck Panels

This option will have the highest construction cost of all of the options however; traffic control costs may be lower due to reduced construction time. Comparison of accelerated construction to conventional construction is beyond the scope of work for this project at this time.

IN-DEPTH INSPECTION REPORT

D031085 P.I.N. 3501.60

B.I.N. 1069151

TEAM LEADER Andrew J. Fuller, P.E. 59848
NYSPE LICENSE #

ASSISTANT TEAM LEADER Jeffrey M. Reina, P.E.
ASSISTANT TEAM LEADER Logan Bessel
ASSISTANT TEAM LEADER Jerome Getter

FEATURE CARRIED I - 481 Southbound
FEATURE CROSSED Jamesville Road

DATE FIELD WORK BEGAN December 18, 2013
DATE FIELD WORK COMPLETED February 6, 2014

TABLE OF CONTENTS

- TP 349 & 350
- IN-DEPTH CONDITION DOCUMENTATION
- IN-DEPTH PHOTO DOCUMENTATION
- ASBESTOS REPORT

TP 349 & TP 350

BRIDGE ELEMENT RATINGS

Inspection Date: 5/31/2013 RC: 33 BIN: 1069151

Bridge Ratings

Carried: 481I 481I33012026 Crossed: JAMESVILLE RD CR7 CheckValue: 1,822,674,000

Inspection Agency: 10 - NYSDOT Type of Inspection: 1 - BIENNIAL
GTMS: 402 -- Steel Continuous - Stringer/Multi-Beam or Girder
POSTINGS: See Gen Rec Page 1 for Postings at time of inspection.
Further Investigation Needed: No
State Highway Number: 76-2 Milepoint: 3.21 AADT/Yr: 16400 / 2010
Orientation: 2 - Northeast Political Unit: 0233 - Town of DEWITT Year Built: 1980
Total Spans: 2 Ramp Bridge Attached To Span: NA BIN: NA
General Recommendation: 5 Computed Condition Rating: 4.958

Abutment Ratings:	Beg Abut	End Abut
Joint with Deck	4	5
Bearings, Bolts, Pads	6	6
Seats and Pedestals	6	7
Backwall	5	4
Stem (Breastwall)	6	5
Erosion or Scour	5	5
Footings	9	9
Piles	9	9
Recommendation	5	5

Wingwall Ratings:	Beg Abut	End Abut
Walls	6	6
Footings	9	9
Erosion or Scour	6	6
Piles	9	9

Channel Ratings:	Channel
Stream Alignment	5
Erosion and Scour	5
Waterway Opening	6
Bank Protection	5

Approach Ratings:	Approaches
Drainage	4
Embankment	6
Settlement	5
Erosion	5
Pavement	4
Guide Railing	5

Number of Flags Issued:

RED: 0 Yellow: 0 Safety: 0

Vulnerability Reviews Recommended: 1=Yes, 2=No, 3=NA, X=NotActive

Hydraulic: 2 Overload: X Steel: 2
Collision: 2 Concrete: X Seismic: X

Inspector's Signature: CheckValue: 1,822,674,000 Date: 5/31/2013

Peter Riehlman,PE () (Inspector ID:3000052)

Signed copy of this inspection report is available in the appropriate NYSDOT Regional Office

Reviewed By: Date: 7/10/2013

James R. Manning,PE () (QC ID:3000023)

Signed copy of this inspection report is available in the appropriate NYSDOT Regional Office

Inspection Date: 5/31/2013 RC: 33 BIN: 1069151

Span Ratings

Carried: 481I 481I33012026 Crossed: JAMESVILLE RD CR7 CheckValue: 1,822,674,000

Deck Element Ratings:	001	002
Wearing Surface	4	4
Curbs	4	4
Sidewalks, Fascias	5	5
Railings, Parapets	5	5
Scuppers	8	8
Gratings	8	8
Median	8	8
Mono Deck Surface	5	4

Superstructure Ratings:	001	002
Structural Deck	5	5
Primary Members	5	5
Secondary Members	5	5
Paint	4	4
Joints	8	8
Recommendation	5	5

Pier Ratings:	001	002
Bearings, Bolts, Pads	5	8
Pedestals	6	8
Top of Cap or Beam	6	8
Stem Solid Pier	8	8
Cap Beam	5	8
Pier Columns	6	8
Footings	9	8
Erosion or Scour	5	8
Piles	9	8
Recommendation	6	8

Utility Ratings:	001	002
Lighting	8	8
Sign Structure	8	6
Utilities and Support	8	8

Field Notes:

Field Date	Arrival	Departure	Temp (C)	Temp (F)	Weather Conditions
5/21/2013	10:00:00 AM	12:30:00 PM		80	ptly.cldy.
5/28/2013	9:00:00 AM	10:30:00 AM		65	ptly cldy
5/31/2013	9:30:00 AM	12:15:00 PM		85	ptly cldy.

IN-DEPTH CONDITION DOCUMENTATION

BIN 1069151

Visual Inspection

The bridge was constructed in 1980. The deck joints were replaced in 1995 under contract D256745. In 2006 under contract D260442, miscellaneous concrete repairs were made, new bearings were installed, and a new deck overlay and bridge joints were placed.

Cracks, spalls, and other field observations are shown on the plans. Below is a brief summary of conditions for each feature.

Superstructure

Deck – See Bridge Deck Evaluation Report

Steel – See Structural Steel Inspection Summary

Bearings – Bearing elements typically have minor rust scale.

Substructure

West Abutment – The concrete backwall and pedestals contained only minor isolated areas of delaminated concrete and cracking. The stem had delaminated concrete on the top surface next to pedestal 3, on the west face between pedestals 3 and 4, and next to pedestal 5. Between pedestal 6 and wingwall the stem had cracked around an existing patch. The wingwalls had minor isolated areas of delaminated concrete and cracking.

Pier 1 – The concrete pedestals contained only minor isolated areas of delaminated concrete and cracking. The cap beam had spalling with exposed rebar on the edge below pedestal 1 and below pedestal 3. The bottom face of the cap beam below pedestal 6 was delaminated and contained a small area of spalling concrete. The south column had an area of delaminated concrete on the west face.

East Abutment – The concrete pedestals contained only minor isolated areas of delaminated concrete and cracking. The stem had minor cracking below

pedestals 1 and 6, and rust staining below pedestals 1, 5, and 6. The backwall had spalling concrete above pedestals 1 and around pedestal 5. The wingwalls had minor isolated areas of delaminated concrete and cracking.

BIN 1069151

Special Emphasis Inspection Required

Non-Redundant/Fracture Critical Members – No

Pin and Hangers – No

Fatigue-Prone Welds – Yes

Non-Categorized Fatigue-Prone Details – No

Other (Specified in Text) – No

Special Emphasis Details

Gusset plate welds require 100% hands-on inspection. No defects were observed.

Overall Steel Condition

Isolated pockets of up to 20% section loss were observed on the bottom flanges of the fascia girders. An existing gusset plate weld repair was observed in bay 2 of span 2, 2nd crossframe from the east abutment. Exterior girders displayed the most significant deterioration. The interior girders were less deteriorated.

Paint

The lower outer fascia flanges, top surface, were pitted and flacking for the full lengths. The bottom flanges of the fascia girders contained the most paint deterioration, specifically the top surface of the bottom flange, which contained widespread paint delamination with isolated pockets of pitting rust.

Section Loss

Due to the age of the steel, a blanket 5% section loss to the bottom flanges should be used in conjunction with localized areas of greater section loss of the fascia girders in load rating.

DATE

CHECKED BY

DRAFTED BY CADD

CHECKED BY

LEGEND

- C-X — CORE LOCATION
- XX — PHOTO LOCATION
- DELAMINATION
- SPALLING
- CRACK
- MAP CRACKING
- MOISTURE

REPLACE EXISTING ABUTMENT JOINT

STA. "W" 196+29.00
BRIDGE BEGINS

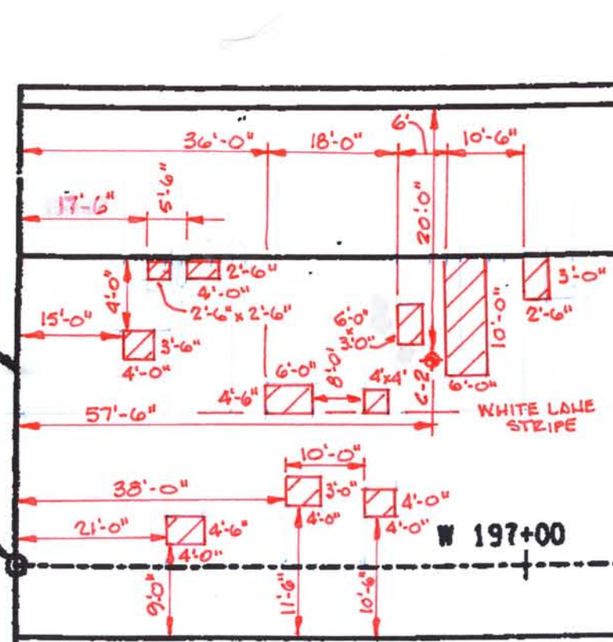

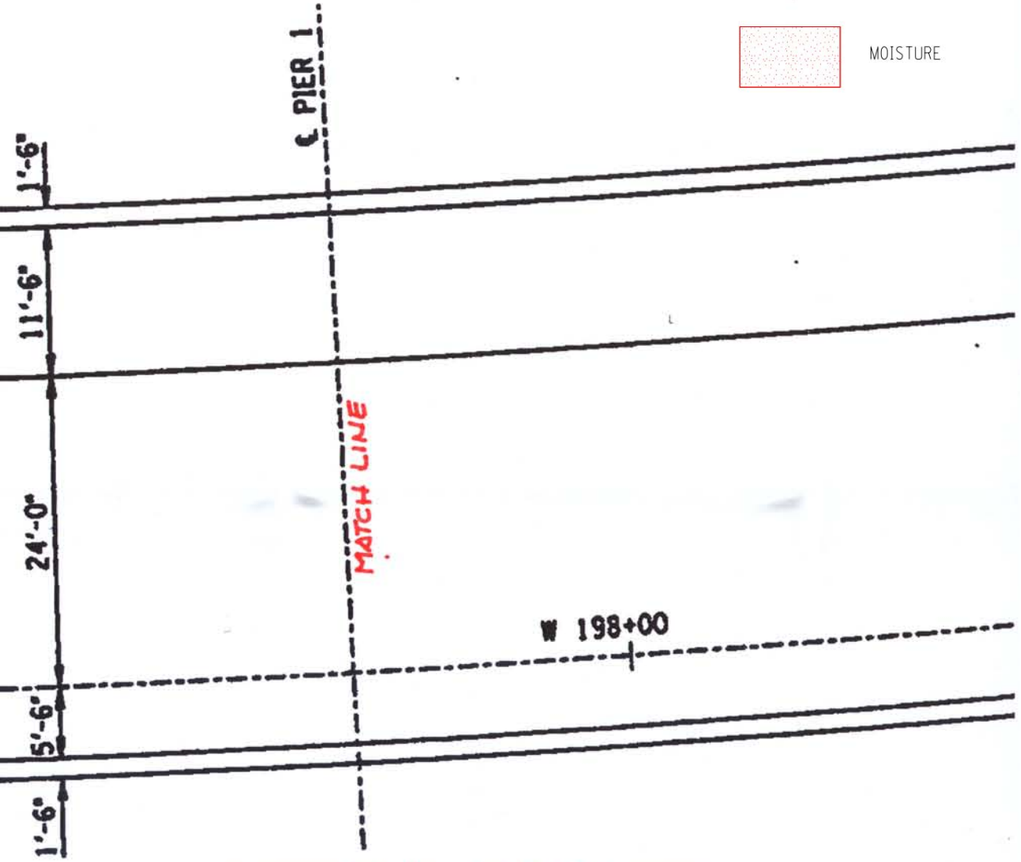

BIN 1069151
BRIDGE DECK - SPAN 1

I-481 SB OVER JAMESVILLE ROAD

PLAN VIEW

FED. ROAD REG. NO.
1
INTE

LEGEND

- CORE LOCATION
- PHOTO LOCATION
- DELAMINATION
- SPALLING
- CRACK
- MAP CRACKING
- MOISTURE

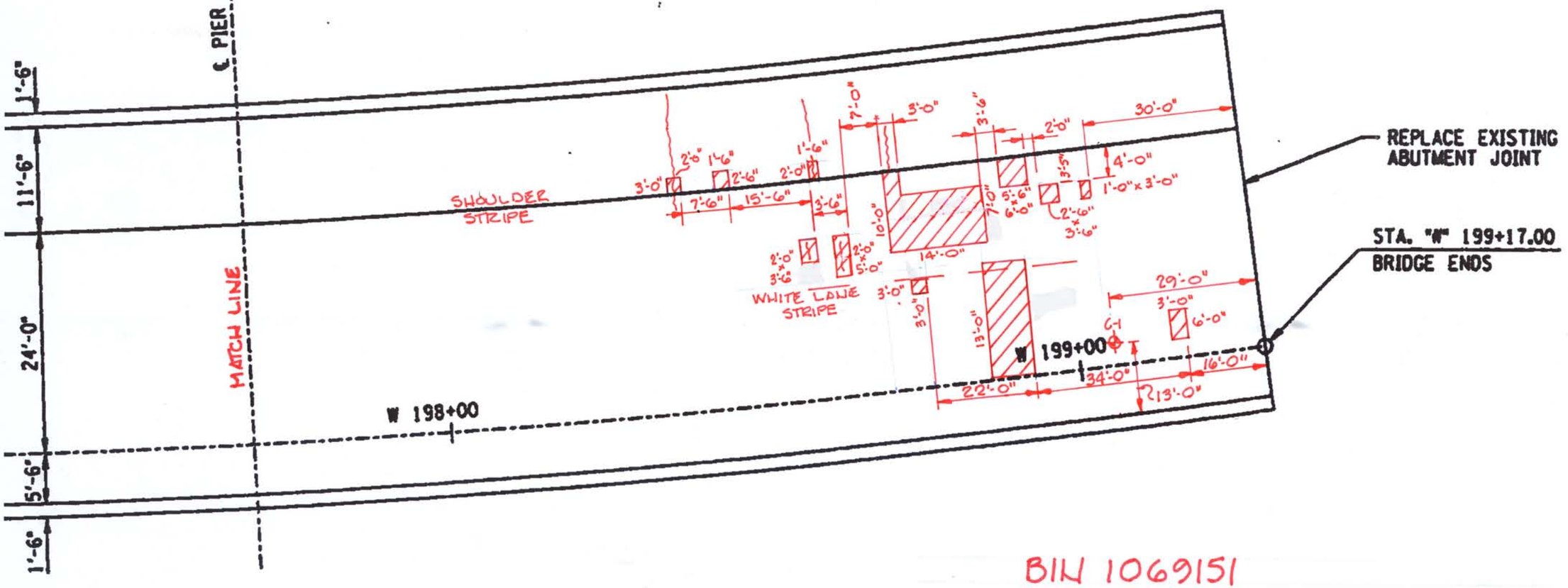

BIN 1069151
BRIDGE DECK - SPAN 2

I-481 SB OVER JAMESVILLE ROAD

PLAN VIEW

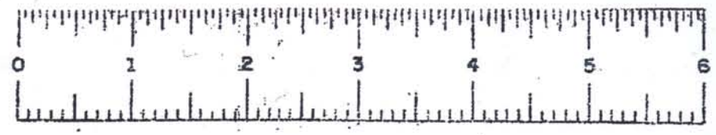

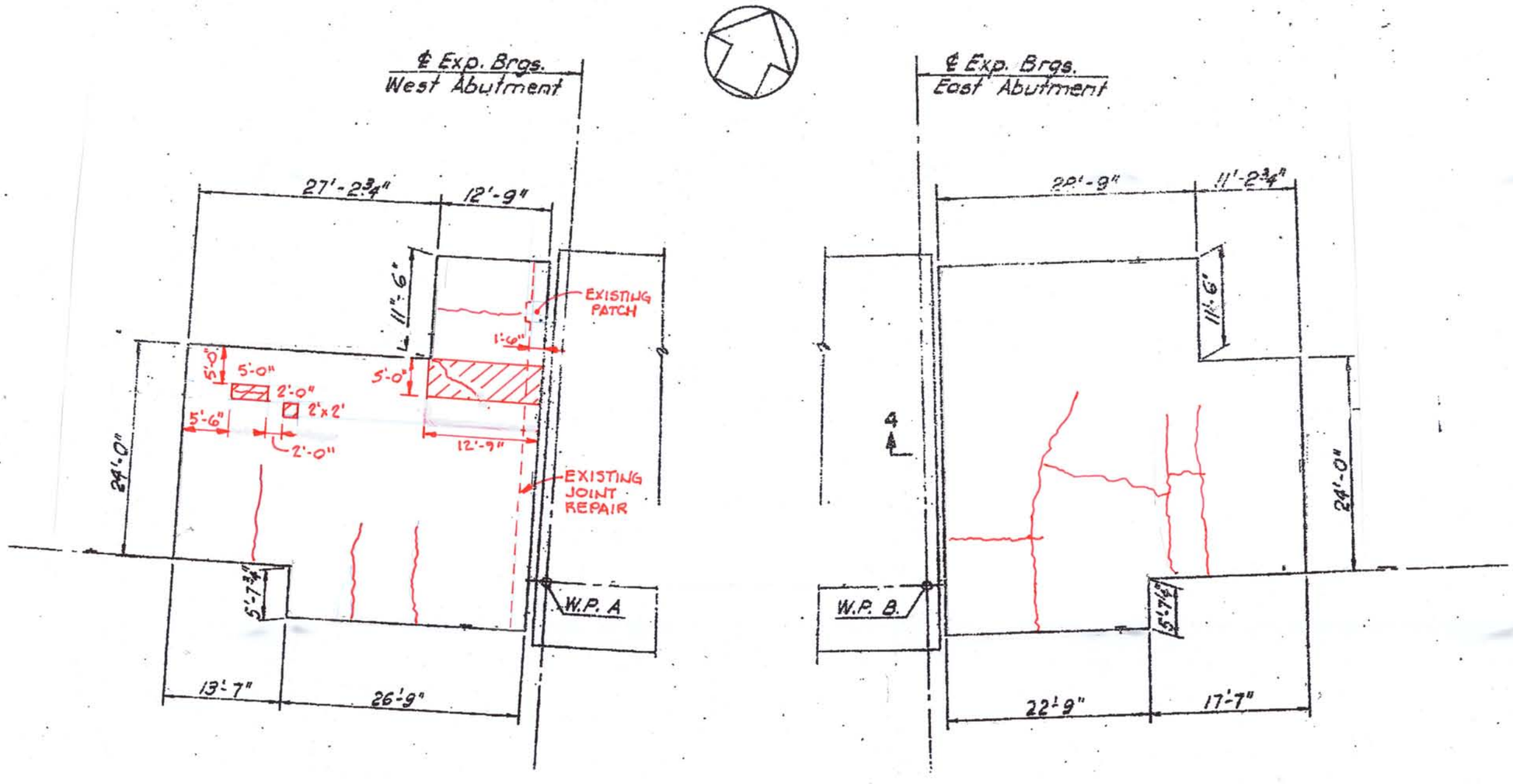

APPROACH SLAB PLAN

BIN 1069151

BRIDGE DECK - APPROACH SLABS

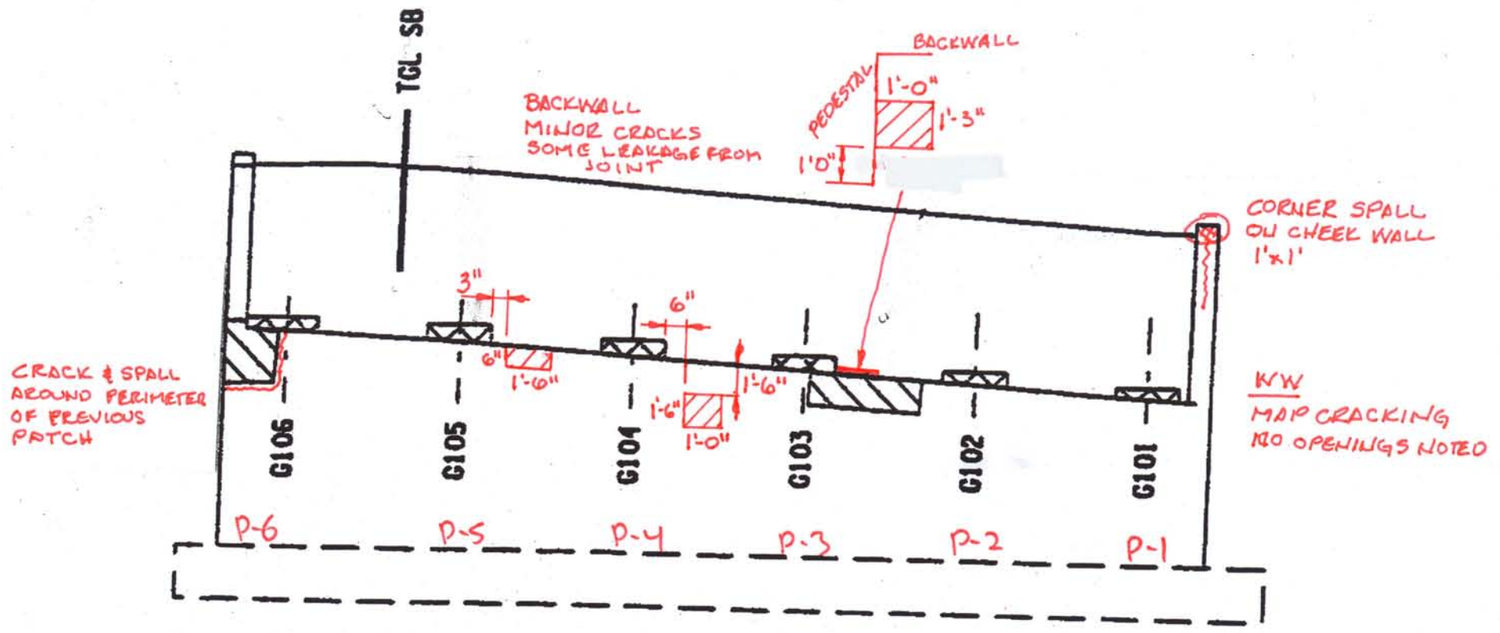

I-481 SB OVER JAMESVILLE RD.
WEST ABUTMENT ELEVATION

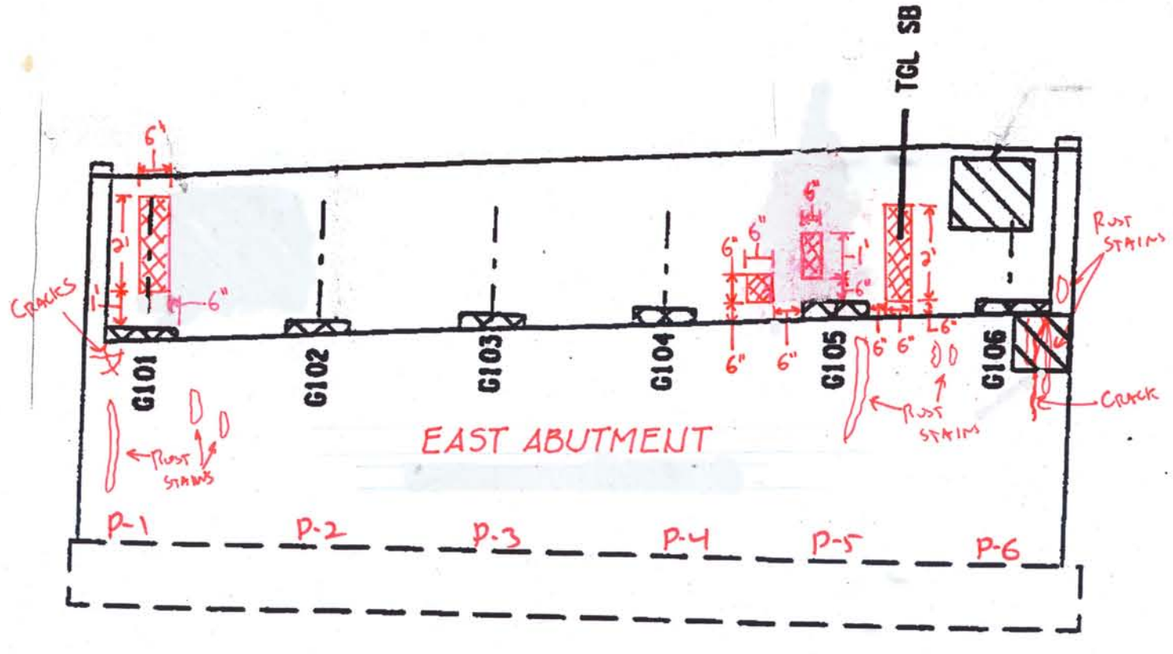

BIN 106915
RT 481 SB OVER
JAMESVILLE ROAD

REG. NO.	S
1	
P.I.N. 3804.9	
I-481	
REHABILITATI	

LEGEND

- C-X — CORE LOCATION
- (D) — PHOTO LOCATION
- DELAMINATION
- SPALLING
- CRACK
- MAP CRACKING
- MOISTURE

LEGEND

CORE LOCATION

PHOTO LOCATION

DELAMINATION

SPALLING

CRACK

MAP CRACKING

MOISTURE

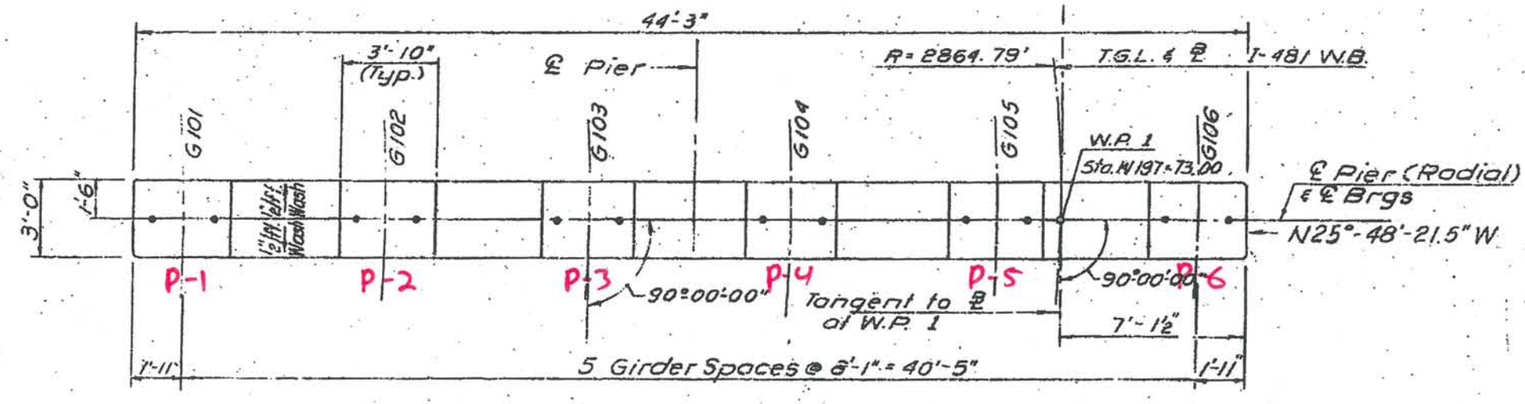

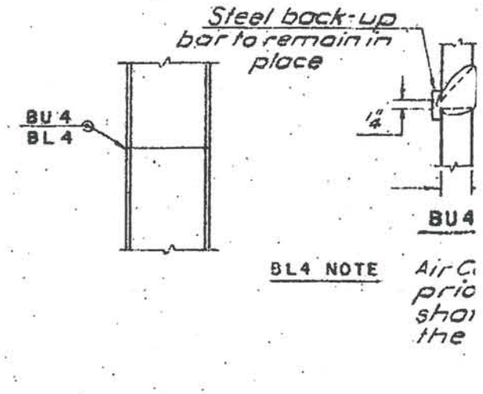

STEEL SPLICE F

Not

CAP PLAN

Scale: ¼" = 1'-0"

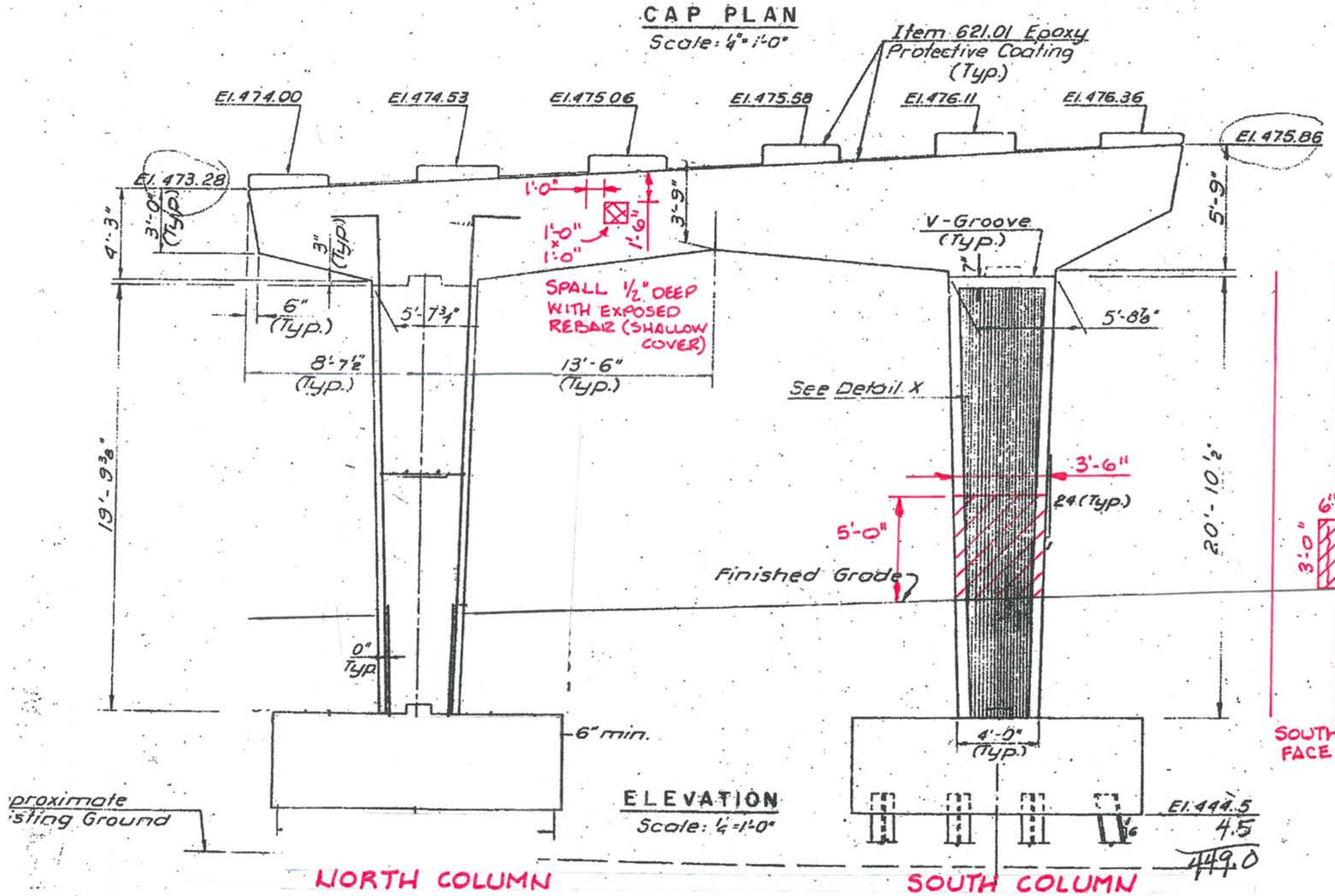

ELEVATION

Scale: ¼" = 1'-0"

NORTH COLUMN

SOUTH COLUMN

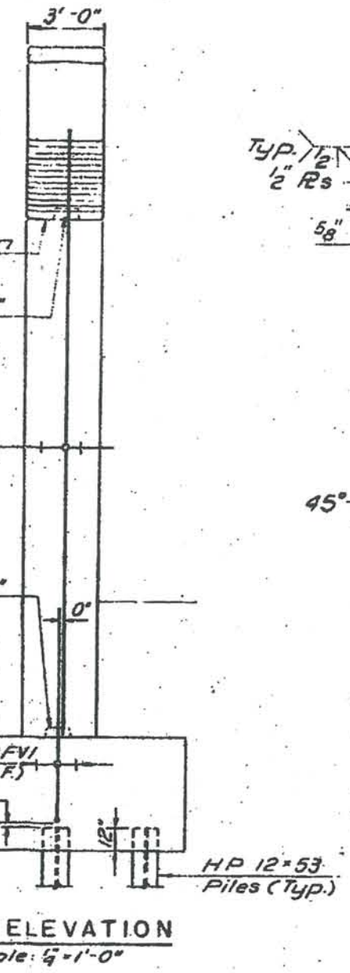

END ELEVATION

Scale: ¼" = 1'-0"

BIN 1069151

EAST FACE

PIER 1

LEGEND

- CORE LOCATION (C-X)
- PHOTO LOCATION (X)
- DELAMINATION
- SPALLING
- CRACK
- MAP CRACKING
- MOISTURE

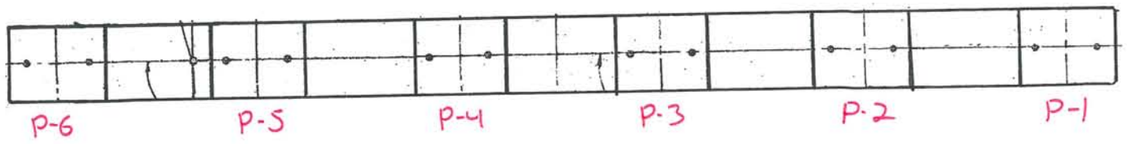

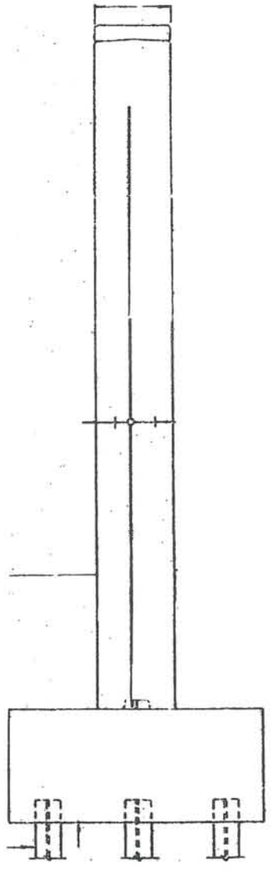

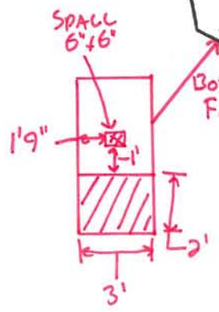

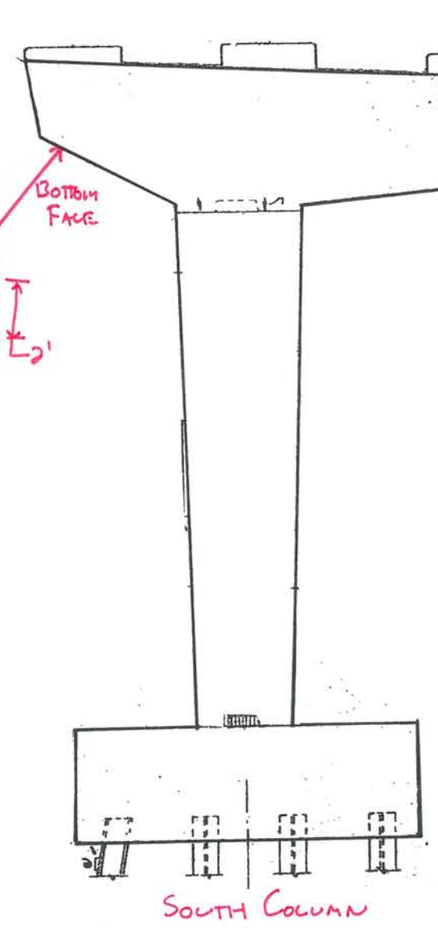

SOUTH COLUMN

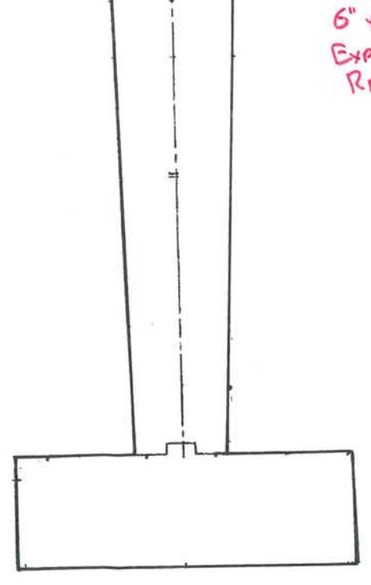

NORTH COLUMN

BIN 1069151
I 481 SB
OVER
JAMESVILLE ROAD
PIER 1

WEST FACE

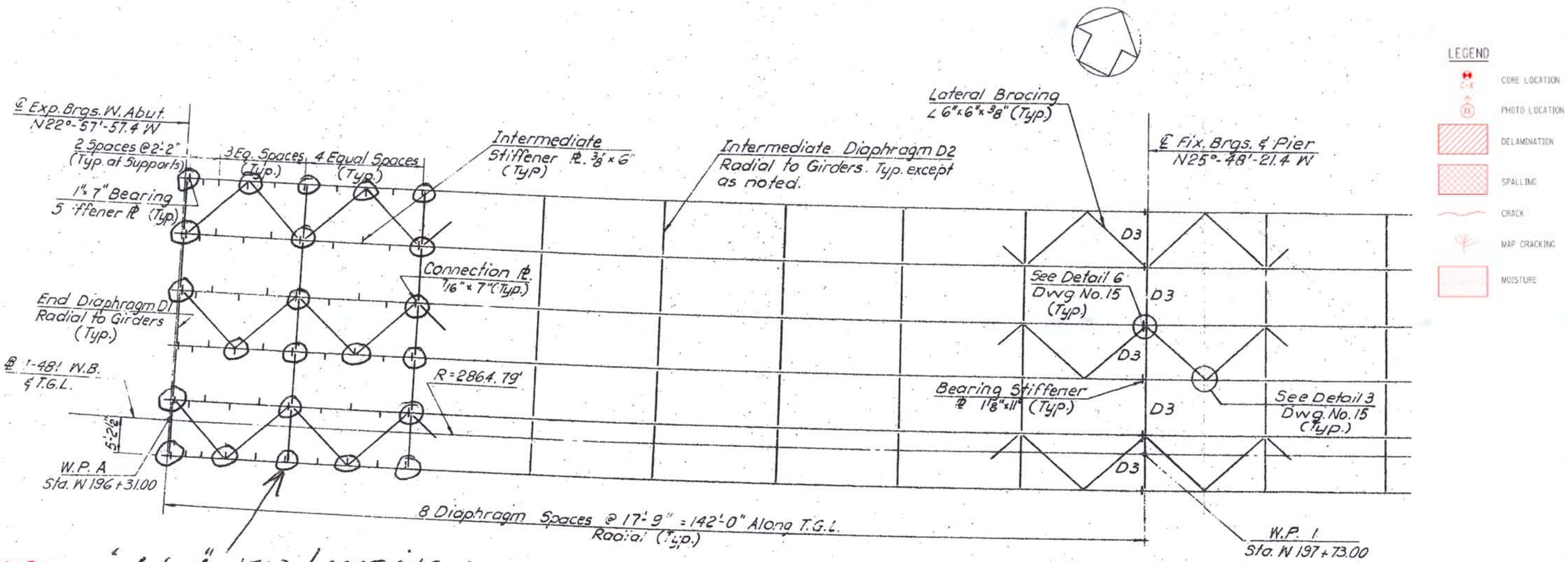

NOTES:
100% HANDS-ON INSPECTION OF GUSSET PLATES PERFORMED.
NO DEFECTS IN WELDS WERE OBSERVED.

"D & E" WELD LOCATIONS AT EACH CROSS-MEMBER & EACH STIFFENER

FRAMING PLAN
Scale: 1" = 10'

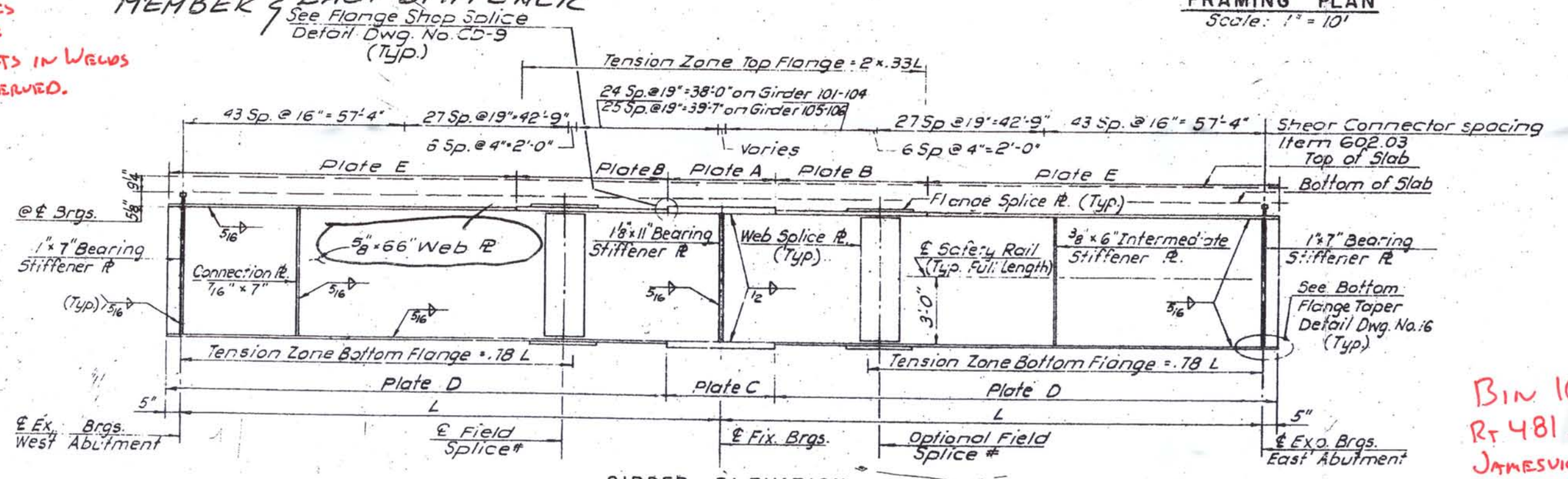

GIRDER ELEVATION
Not to Scale

See Notes 4 and 5 Dwg No. 15.

BIN 1069151
RT 481 SB OVER JAMESVILLE ROAD
SPAN 1

1069151 SPAN 2

D95042

SPAN 2 FATIGUE INSPECTION completed 12/20/13

FED. ROAD REG. NO.	STATE	FEDERAL AID PROJECT NO.	SHEET NO.	TOTAL SHEETS
1	N. Y.	I-IG-481-2(74) I-III-81-2(126)	490	571

INTERSTATE ROUTE CONNECTION 571
FOREST INTERCHANGE - JAMESVILLE
ONONDAGA COUNTY

NOTE:

Girder Webs, Flanges, Stiffeners, Connection Plates, Splice Plates and Diaphragms shall conform to current A.S.T.M. Designation A 36.

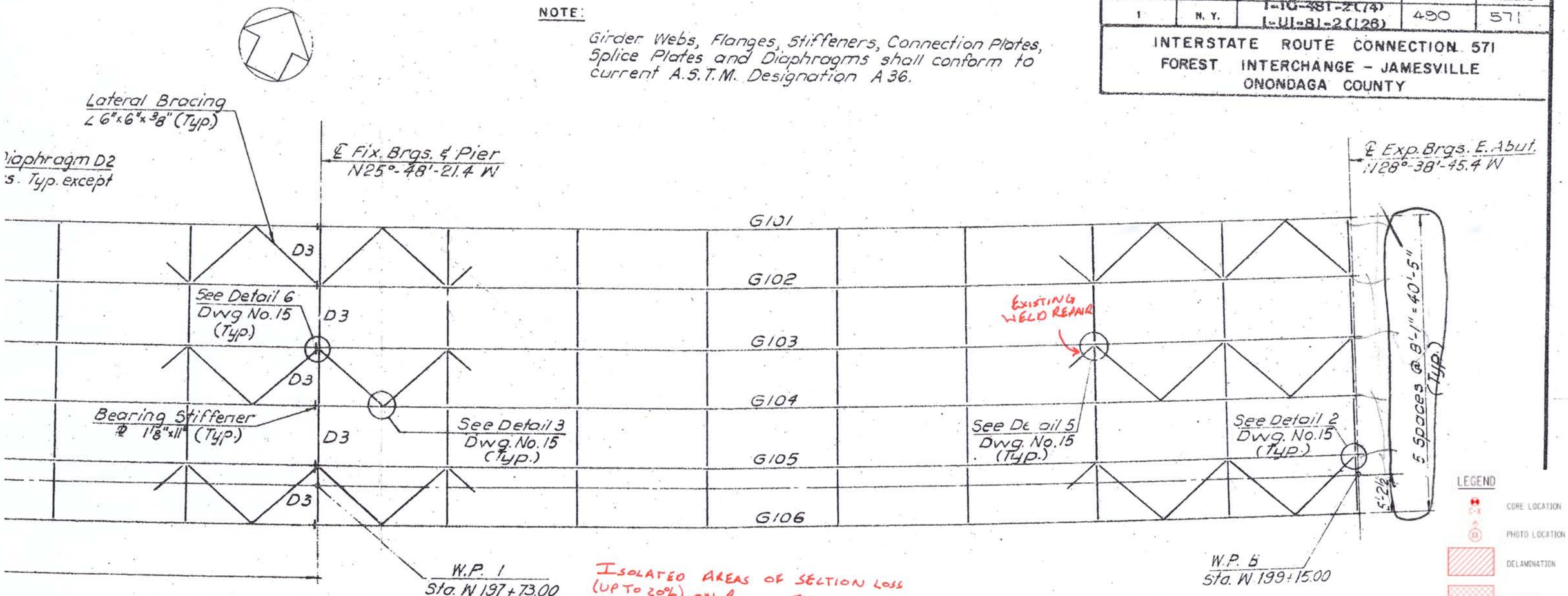

ISOLATED AREAS OF SECTION LOSS (UP TO 20%) ON BOTTOM FLANGE OF FASCIA GIRDERS.

FRAMING PLAN
Scale: 1" = 10'

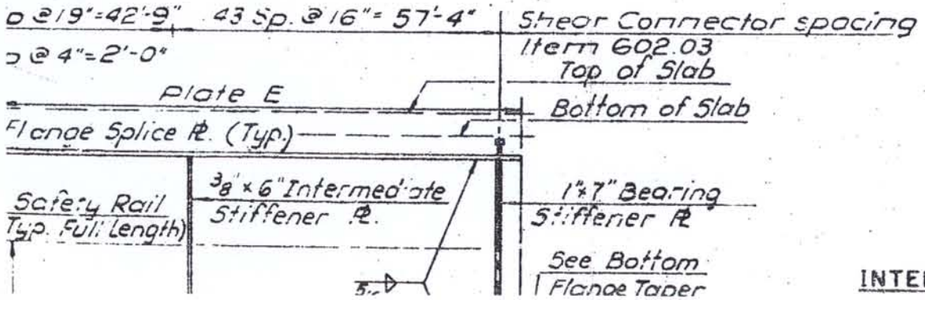

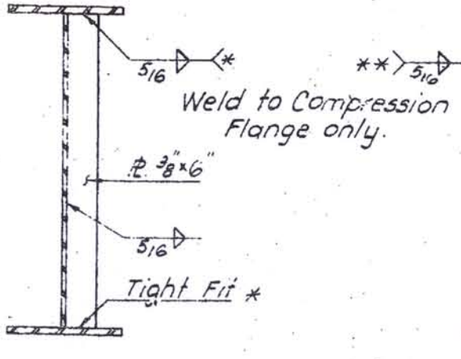

INTERMEDIATE STIFFENER

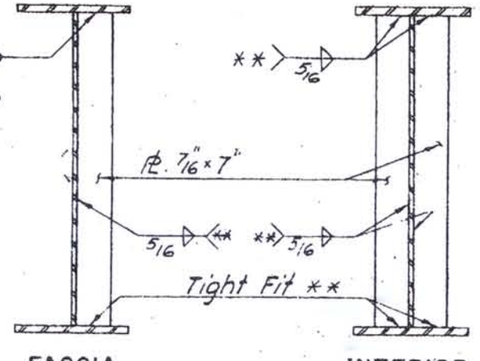

FASCIA **INTERIOR**
CONNECTION PLATES

LEGEND
CORE LOCATION
PHOTO LOCATION
DELAMINATION
SPALLING
CRACK
MAP CRACKING
MOISTURE

BIN 1069151
RT 481 SB OVER
JAMESVILLE ROAD
SPAN 2

LEGEND:

*-Tight fit in Tension Zone; Weld in Compression Zone. See Girder Elevations for limits of Tension Zones.

**-See Superstructure Notes

IN-DEPTH PHOTO DOCUMENTATION

C&S Engineers, Inc.
499 Col. Eileen Collins Blvd.
Syracuse, New York 13212
Phone: (315) 455-2000
Fax: (315) 455-9667
www.cscos.com

I-481 SB over Jamesville Rd - BIN 1069151



DESCRIPTION: WEST ABUTMENT – EAST CHEEKWALL – CORNER SPALL

PHOTO 1



DESCRIPTION: WEST ABUTMENT – TOP OF STEM – BETWEEN PEDESTALS 2 AND 3 – DELAMINATED CONCRETE

PHOTO 2

C&S Engineers, Inc.
499 Col. Eileen Collins Blvd.
Syracuse, New York 13212
Phone: (315) 455-2000
Fax: (315) 455-9667
www.cscos.com

I-481 SB over Jamesville Rd - BIN 1069151



DESCRIPTION: WEST ABUTMENT – STEM – BETWEEN PEDESTALS 3 AND 4 – DELAMINATED CONCRETE

PHOTO 3



DESCRIPTION: WEST ABUTMENT – STEM – BELOW PEDESTAL 5 – DELAMINATED CONCRETE

PHOTO 4

C&S Engineers, Inc.
499 Col. Eileen Collins Blvd.
Syracuse, New York 13212
Phone: (315) 455-2000
Fax: (315) 455-9667
www.cscos.com

I-481 SB over Jamesville Rd - BIN 1069151



DESCRIPTION: WEST ABUTMENT – STEM – BELOW PEDESTAL 6 – CRACK AND SPALL AROUND EXISTING PATCH

PHOTO 5



DESCRIPTION: WEST ABUTMENT – PEDESTAL 6 – TYPICAL CONCRETE

PHOTO 6

C&S Engineers, Inc.
499 Col. Eileen Collins Blvd.
Syracuse, New York 13212
Phone: (315) 455-2000
Fax: (315) 455-9667
www.cscos.com

I-481 SB over Jamesville Rd - BIN 1069151



DESCRIPTION: WEST ABUTMENT – BEARING 3 - TYPICAL

PHOTO 7



DESCRIPTION: WEST ABUTMENT – BETWEEN PEDESTALS 2 AND 3 –STEEL DECK PLANS – TYPICAL CONDITIONS

PHOTO 8

C&S Engineers, Inc.
499 Col. Eileen Collins Blvd.
Syracuse, New York 13212
Phone: (315) 455-2000
Fax: (315) 455-9667
www.cscos.com

I-481 SB over Jamesville Rd - BIN 1069151



DESCRIPTION: SPAN 1 – WEST ABUTMENT FACING EAST - TYPICAL

PHOTO 9



DESCRIPTION: SPAN 1 – BAY 5 – WEST ABUTMENT FACING EAST - TYPICAL

PHOTO 10

C&S Engineers, Inc.
499 Col. Eileen Collins Blvd.
Syracuse, New York 13212
Phone: (315) 455-2000
Fax: (315) 455-9667
www.cscos.com

I-481 SB over Jamesville Rd - BIN 1069151



DESCRIPTION: PIER 1 – EAST FACE – CAP BEAM – BELOW PEDESTAL 3 – DELAMINATED CONCRETE

PHOTO 11



DESCRIPTION: PIER 1 – WEST FACE – PEDESTAL 2 – TYPICAL CONCRETE

PHOTO 12

C&S Engineers, Inc.
499 Col. Eileen Collins Blvd.
Syracuse, New York 13212
Phone: (315) 455-2000
Fax: (315) 455-9667
www.cscos.com

I-481 SB over Jamesville Rd - BIN 1069151



DESCRIPTION: PIER 1 – PEDESTAL 4 – TYPICAL BEARING

PHOTO 13



DESCRIPTION: PIER 1 – BETWEEN PEDESTAL 1 AND 2 – FACING WEST - TYPICAL STEEL AND STEEL DECK PANS

PHOTO 14

C&S Engineers, Inc.
499 Col. Eileen Collins Blvd.
Syracuse, New York 13212
Phone: (315) 455-2000
Fax: (315) 455-9667
www.cscos.com

I-481 SB over Jamesville Rd - BIN 1069151

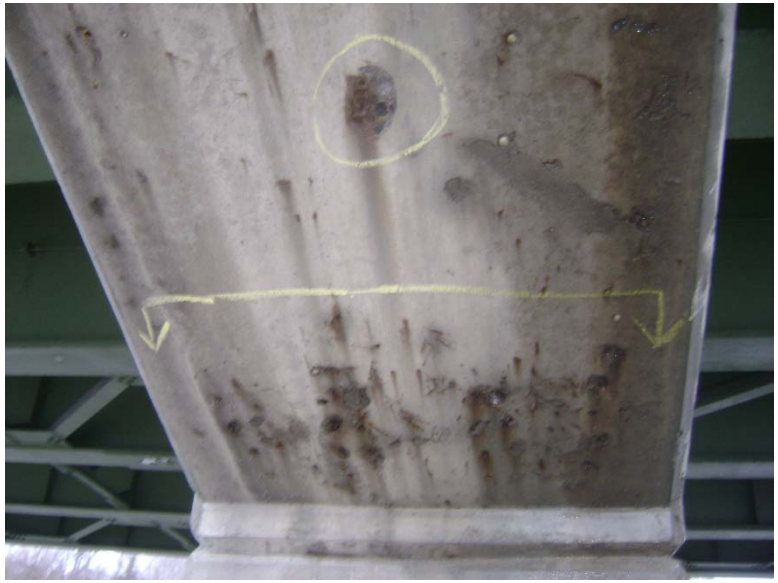

DESCRIPTION: PIER 1 – CAP BEAM – BOTTOM FACE BELOW PEDESTAL 6 – DELAMINATED AND SPALLED CONCRETE

PHOTO 15



DESCRIPTION: SPAN 2 – GIRDER 6 - FACING EAST – OUTSIDE FACIA GIRDER – BOTTOM FLANGE – DETERIORATION

PHOTO 16

C&S Engineers, Inc.
499 Col. Eileen Collins Blvd.
Syracuse, New York 13212
Phone: (315) 455-2000
Fax: (315) 455-9667
www.cscos.com

I-481 SB over Jamesville Rd - BIN 1069151



DESCRIPTION: SPAN 2 – FACING WEST – GIRDER 6 – FACIA GIRDER – BOTTOM FLANGE – DETERIORATION

PHOTO 17



DESCRIPTION: EAST ABUTMENT – NORTH CHEEKWALL – STEM – MINOR CRACKING

PHOTO 18

C&S Engineers, Inc.
499 Col. Eileen Collins Blvd.
Syracuse, New York 13212
Phone: (315) 455-2000
Fax: (315) 455-9667
www.cscos.com

I-481 SB over Jamesville Rd - BIN 1069151



DESCRIPTION: EAST ABUTMENT – STEM – BELOW PEDESTAL 6 – MINOR CRACKING AND RUST STAINS

PHOTO 19



DESCRIPTION: EAST ABUTMENT – BACKWALL – BEHIND PEDESTAL 1 – SPALLING CONCRETE

PHOTO 20

C&S Engineers, Inc.
499 Col. Eileen Collins Blvd.
Syracuse, New York 13212
Phone: (315) 455-2000
Fax: (315) 455-9667
www.cscos.com

I-481 SB over Jamesville Rd - BIN 1069151



DESCRIPTION: EAST ABUTMENT – BACKWALL – BEHIND PEDESTAL 5 – SPALLING CONCRETE

PHOTO 21



DESCRIPTION: EAST ABUTMENT – BACKWALL – BEHIND PEDESTAL 5 – SPALLING CONCRETE

PHOTO 22

C&S Engineers, Inc.
499 Col. Eileen Collins Blvd.
Syracuse, New York 13212
Phone: (315) 455-2000
Fax: (315) 455-9667
www.cscos.com

I-481 SB over Jamesville Rd - BIN 1069151



DESCRIPTION: WEST ABUTMENT – FACING WEST

PHOTO 23



DESCRIPTION: SOUTHWEST WINGWALL – FACING NORTH

PHOTO 24

C&S Engineers, Inc.
499 Col. Eileen Collins Blvd.
Syracuse, New York 13212
Phone: (315) 455-2000
Fax: (315) 455-9667
www.cscos.com

I-481 SB over Jamesville Rd - BIN 1069151



DESCRIPTION: PIER 1 – FACING SOUTH

PHOTO 25



DESCRIPTION: EAST ABUTMENT AND NORTHEAST WINGWALL – FACING EAST

PHOTO 26

C&S Engineers, Inc.
499 Col. Eileen Collins Blvd.
Syracuse, New York 13212
Phone: (315) 455-2000
Fax: (315) 455-9667
www.cscos.com

I-481 SB over Jamesville Rd - BIN 1069151



DESCRIPTION: BRIDGE DECK – END APPROACH – FACING SOUTHWEST

PHOTO 27



DESCRIPTION: ELEVATION – FACING SOUTH

PHOTO 28

PHOTOLOG MAP

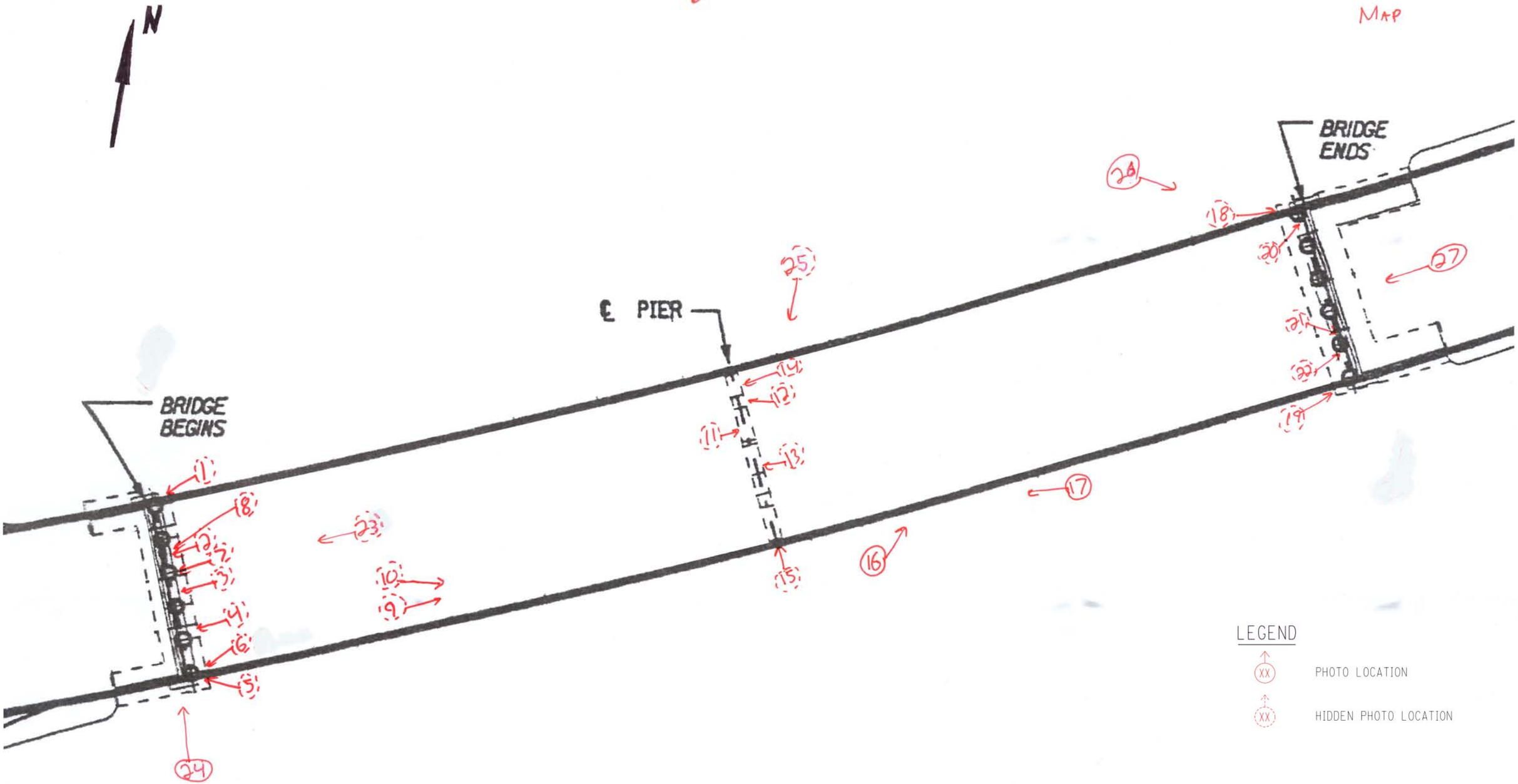

BIN 1069151
I 481 SB OVER
JAMESVILLE ROAD

ASBESTOS DOCUMENTATION

ASBESTOS DOCUMENTATION FROM WATTS ARCHITECTURE & ENGINEERING, INC.

(WILL REPLACE BIN FOLDER ASBESTOS REPORT UPON COMPLETION)

HUDSON ENVIRONMENTAL SERVICES, INC.
Mail: 22 Hudson Falls Rd., So. Glens Falls, NY 12803
Delivery: 211 Ferry Blvd., So. Glens Falls, NY 12803
Phone: 518/747-1060 Fax: 518/747-1062

ANALYTICAL TEST RESULTS
N.Y.S.D.O.H. LAB ID#11140
*ANALYZED BY N.Y.S.D.O.H. LAB ID#10898

CLIENT: NYSDOT
DATE SAMPLED: 04/09/03
SAMPLE DESCRIPTION: See Below
TIME SAMPLED: 11:00 AM
MATRIX: Solid
DATE SAMPLE RECD: 04/21/03
LOCATION: BIN 1069151
TYPE SAMPLE: Grab
H.E.S. #: See Below
SAMPLER: K.Cook/NYSDOT

NOB BULK MATERIAL ANALYSIS FOR ASBESTOS

HES LAB ID#: 030421K	K01	K02	K03
LAB ID#: E03	981	982	983
CLIENT: SAMPLE ID/DESCRIPTION	1069151, 01 G1 Span 2 10M AHD of pier	1069151, 02 G6 Span 2 @ 2/3 L from pier	1069151, 03 G1 Span 1 @ Beg
COLOR	Green	Green	Green
HOMOGENEOUS(YES/NO)	Yes	Yes	Yes
ORGANIC %	35	35	37
ACID-SOLUBLE INORGANICS %	16	18	14
INSOL NON-ASBESTOS INORGANIC %	49	47	49
ASBESTOS ANALYSIS			
CHRYSOTILE %			
AMOSITE %			
CROCIDOLITE %			
OTHER AMPHIBOLE %			
TOTAL ASBESTOS % (PLM)	ND	ND	ND
ASBESTOS ANALYSIS			
TYPE OF ASBESTOS			
PERCENTAGE OF ASBESTOS (TEM)	ND	ND	ND
TOTAL	100	100	100

R-3 DESIGN GRO
MAY 5 2003
R.D.E.
Highway Design
Landscape
Envir. Liaison

Approval By: [signature]
Date: 4/30/03

Hudson Environmental Services, Inc. certifies that the services provided were performed in accordance with the New York State Department of Health, Environmental Laboratory Approval Program certification manual. In the event of an error, HES's sole responsibility will be to perform reanalysis at its own expense. HES, Inc. assumes no other liability for damages incurred from the interpretation or use of the analysis provided.

(OVER)

HUDSON ENVIRONMENTAL SERVICES, INC.

Mail: 22 Hudson Falls Road, South Glens Falls, NY 12803
Delivery: 211 Ferry Blvd., South Glens Falls, NY 12803
Phone: 518/747-1060 Fax: 518/747-1062

CHAIN OF CUSTODY RECORD/ Lab Work Request

ient NYS Dept. of Transportation-Region 3
ient Contact/Person # Christopher Anderson
oject Location B.I.N.
urchase Order
ES Contact William Frawley

Mail Address NYS Dept. of Transportation
333 E. Washington Street
Syracuse, NY 13202
Phone # (315) 428-4628

HES Use Only Lab ID	Sample ID / Description	Date Collected	TIME A=a.m. P=p.m.	SAMPLE TYPE C=Composite G=Grab MATRIX	C	G	# Conts.	ANALYSIS REQUIRED
030421K01	1069151-01; G1		A P	SO		X	1	Asbestos Bulk - NOB
	span 2; 10m AHD of pier		A P					
K02	1069151-02, G6		A P	"		X	1	" " "
	span 2; @ 2/3 L from pier		A P					
K03	1069151-03, G1		A P	"		X	1	" " "
	Span 1, at Beg		A P					
			A P					
			A P					

Matrix: S - Soil, SE - Sediment, SO - Solid, SL - Sludge, O - Oil, DW - Drinking Water, GW - Ground Water, SW - Surface Water, L - Leachate, A - Air, WS - Wipe, DS - Drum Solids, DL - Drum Liquids, X - Other, WW - Waste Water

Special Instructions: Bridge coating - If PLM negative, TEM confirmation on all.

Sampled by: (Signature) [signature]	Date/Time 4/9/03; 11:00a	Received by: (Signature) [signature]	Date/Time 4/24/03 12:[illegible]
Relinquished by: (Signature)	Date/Time	Received by: (Signature)	Date/Time
Relinquished by: (Signature)	Date/Time	Received by: (Signature)	Date/Time
Dispatched by: (Signature)	Method of Shipment:		Date/Time
Received at Laboratory: [signature]	Date/Time 4/12/03 1:30pm	Turnaround Time: Normal	Lab Approval:

HES Use Only

Samples Were:
1. Shipped or Hand Delivered NOTES:
2. [illegible] NOTES:
3. Received Broken/Leaking (Improperly Sealed) Y N NOTES:
4. Properly Preserved NOTES: Y N
5. Received Within Holding Times Y N NOTES:

COC Tape Was:
1. Present on Outer Package Y N
2. Unbroken on Outer Package Y N
3. Present on Sample Y N
4. Unbroken on Sample NOTES: Y N

COC Record Was:
1. Present upon Receipt of Samples Y N

Discrepancies Between Sample Labels and COC Record? Y N NOTES:

WHITE - Lab Copy YELLOW - Sampler Copy PINK - Generator Copy

Asbestos Sampling Survey

Location:

BIN 1069151
Interstate Route I-481 South Bound
over CR 7 and Butternut Creek

Prepared for:

New York State
Department of Transportation

PIN 3056.13.111

LaBella Project No. 201001

August 2001

Table of Contents

Page

I. Project Summary 1

II. Site Description 1

III. Inspection Procedures 1

IV. Results 2

Certification 2

Figures and Table

I. Project Summary

In accordance with conditions of Term Agreement D012606, LaBella Associates, P.C. conducted an asbestos sampling survey of the Interstate Route I-481 south bound bridge over CR 7 and Butternut Creek. Based on laboratory analyses of bulk samples collected, no asbestos-containing materials were identified.

II. Site Description

The Site is located in Onondaga County, New York. For the purpose of this report, the Site consists of the Interstate Route I-481 south bound bridge over CR 7 and Butternut Creek. (See attached FIGURE 1 - Site Location Map).

III. Inspection Procedures

The following procedures were used to obtain the data for this Report:

A. A review of record drawings supplied by Region 3 personnel and a visual inspection of the subject structure were conducted to identify potential visible/accessible sources of asbestos-containing materials. Observations and notes were made to provide a description of the structure, and an estimate of the approximate amount, length, or area of ACM present.

B. Physical or operational constraints, which might affect the removal of the ACM, were identified and reported.

C. Bulk samples of suspected ACM were collected during the site inspection of the subject structure. Samples were taken from each homogeneous area that may contain ACM.

D. Samples were submitted for analysis. Preliminary PLM analyses of NOB materials were performed by LaBella Laboratories, a NYSDOH approved laboratory, to determine the presence and percentage of asbestos in each sample. TEM analyses of NOB materials, if necessary, were performed by AMA Analytical, Inc.

E. Lab results were used to determine the approximate location, type, and amount of the verified ACM.

F. A drawing of the structure at the Site was created, in order to show sample locations and the approximate locations and amounts of confirmed ACM observed in accessible locations.

Only accessible areas were inspected. Inaccessible areas, such as areas within the bridge or the approaches to the bridge were not included in this inspection. No investigation was conducted by LaBella Associates to determine the presence of underground utilities on or in the immediate vicinity of the Site. Actual sample locations are shown in the attached FIGURE 2. Results of bulk sample analyses are tabulated in the attached TABLE.

IV. Results

BIN 1069151 Interstate Route I-481 South Bound over CR 7 and Butternut Creek

Based on laboratory analyses of bulk samples collected, no asbestos-containing materials were identified.

Certification

LaBella Associates, P.C. certifies the accuracy of this report, to the best of our knowledge, based on the information collected as described in the Inspection Procedures Section of this investigation.

Figures & Table

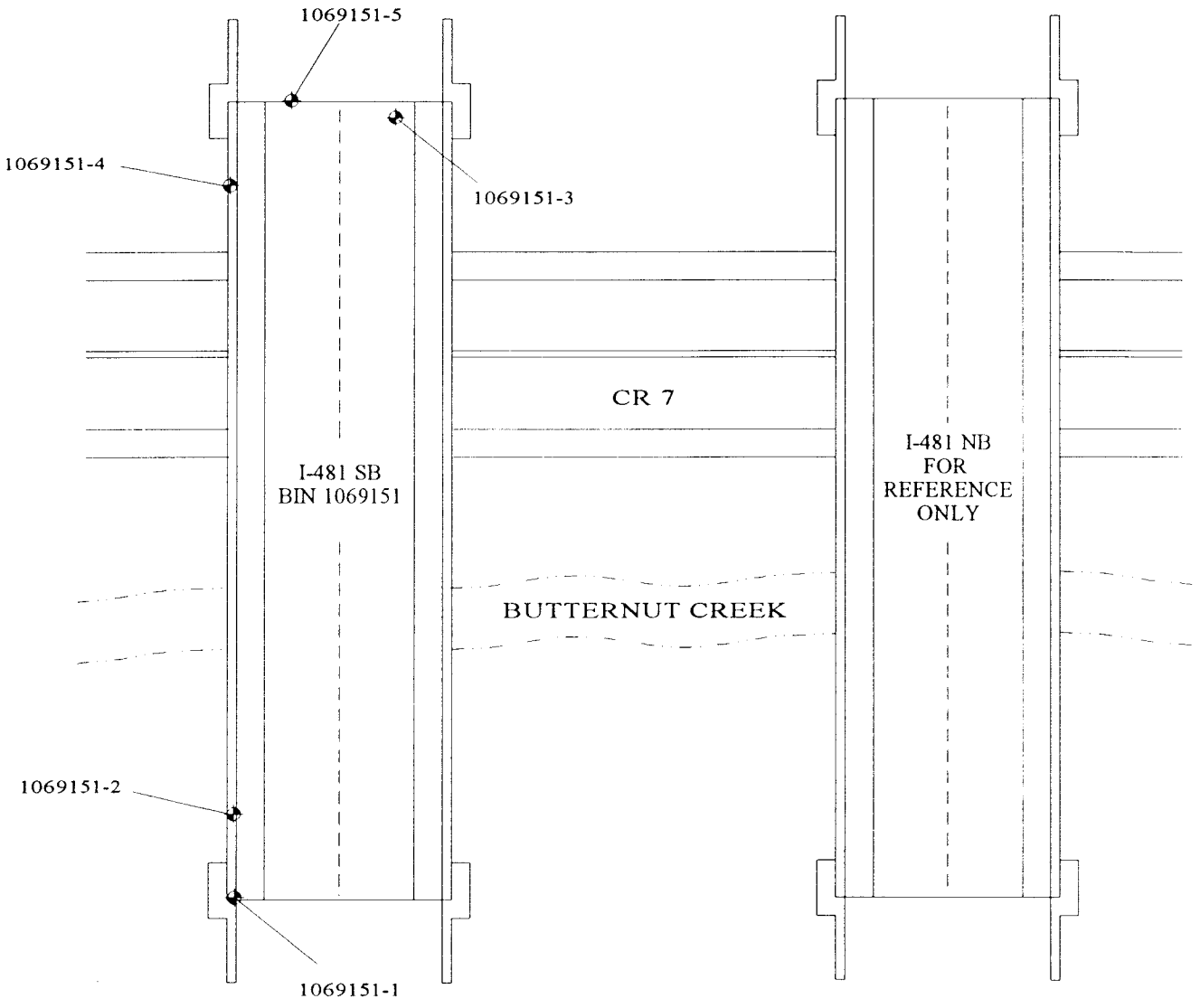

NOTE: NO ASBESTOS-CONTAINING MATERIALS IDENTIFIED.

LEGEND

◆ 1069151-1 SAMPLE LOCATION

NORTH	PROJECT TITLE: ASBESTOS SAMPLING SURVEY 19 BRIDGES ALONG INTERSTATE I-481 ONONDAGA COUNTY, NEW YORK	PROJECT NO. 201001 PIN 3056.13.111
	FIGURE TITLE: FIGURE 2 BIN 1069151 I-481 SB OVER CR 7 & BUTTERNUT CREEK SAMPLE LOCATIONS & CONFIRMED ACM	NOT TO SCALE DATE: AUGUST, 2001

Bulk Sample Results Table

Asbestos Sampling Survey
BIN 1069151
Interstate Route I-481 South Bound
over CR 7 and Butternut Creek
Onondaga County, New York
LaBella Project # 201001
PIN 3056.13.111

Sample #	Sample Location	Type of Material	Results % Asbestos	Amount of Material	Specification Item No.
1069151-1	West End of Bridge in Expansion Joint	Black Joint Repair Material	None Detected	N/A	N/A
1069151-2	North Side of Bridge on Guide Rail	Black Construction Adhesive	None Detected	N/A	N/A
1069151-3	East End of Bridge Beneath Bearing	Bearing Pad	None Detected	N/A	N/A
1069151-4	East End of Bridge on I-Beam	Green Paint	None Detected	N/A	N/A
1069151-5	East End of Bridge on Pedestal	Gray Masonry Coating	None Detected	N/A	N/A

NEW YORK STATE
DEPARTMENT OF TRANSPORTATION
D031085 P.I.N 3501.60

LEVEL 1 LOAD RATING
B.I.N. 1069151
I-481 SB over Jamesville Road

LOAD RATING SUMMARY TABLE (LOAD FACTOR)					
CONTROLLING MEMBER	**CONTROLLING PARAMETER**	**LIVE LOAD**	**LIVE LOAD TYPE**	**INVENTORY RATING**	**OPERATING RATING**
(G5) INTERIOR GIRDER	DESIGN FLEXURE	HS20-44	Lane	HS 24.7 (44.4 TONS)	HS 41.2 (74.2 TONS)
(G5) INTERIOR GIRDER	DESIGN FLEXURE	ALTERNATE MILITARY LOADING	Axle Load	2.716 (65.1 TONS)	4.536 (108.8 TONS)

DOES NOT INCLUDE FUTURE WEARING COURSE

ANALYSIS METHOD:LOAD FACTOR

RECOMMENDED POSTING AS-IS CONDITION: _____ Tons __X__ None

CALCULATED BY:

STATE OF NEW YORK JESSICA S. BAUER No. 084915 LICENSED PROFESSIONAL ENGINEER

DATE: 06/10/14

QUALITY ASSURANCE BY:

STATE OF NEW YORK PAUL F. BYRNE 055928 LICENSED PROFESSIONAL ENGINEER

DATE: 06/10/14

C&S COMPANIES®

499 Col. Eileen Collins Blvd.
Syracuse, NY 13212
phone 315-455-2000
fax 315-455-9667
www.cscos.com

ENGINEERS
DESIGN BUILD
TECHNICAL RESOURCES
OPERATIONS

C&S Engineers, Inc.
Syracuse Hancock International Airport
Syracuse, NY 13212
phone 315-455-2000
fax 315-455-9667
www.cscos.com

TECHNICAL MEMORANDUM

TO: FILE (190.514.001)

FROM: JESSICA S. BAUER, P.E.
NYSPE 084915

DATE: MARCH 7, 2014

C&S PROJECT NO.: 190.514.001

RE: SEISMIC ASSESSMENT SUMMARY
NEW YORK STATE DEPARTMENT OF TRANSPORTATION
D031085; PIN 3501.60; I-81

BIN: 1069151 Seismic Assessment

This memorandum summarizes the seismic assessment conducted for BIN 1069151 as part of the Interstate 81 Project in Syracuse, NY. The purpose of the assessment is to determine if seismic retrofits are warranted at the superstructure to substructure connection, and if further seismic evaluation of the structure is required. This memorandum will give the assessment results, retrofits required and recommendations for further seismic evaluation of the structure.

ASSESSMENT PROCEDURE

The seismic assessment was performed in accordance with the FHWA Seismic Retrofitting Manual for Highway Structures: Part 1 - Bridges, January 2006. As per the referenced manual, seismic assessment was performed for both lower level and upper level earthquake ground motion. The lower level earthquake ground motion has a reasonable likelihood of occurrence within the life of the bridge (50% probability of exceedance within a 75 year bridge life). The upper level earthquake ground motion has a finite likelihood of occurrence within the life of the bridge (7% probability of exceedance within a 75 year bridge life).

Values for the spectral acceleration for the Syracuse area used in the assessment are as follows:

- Lower Level Earthquake Ground Motion for a Short Period (0.2 seconds): $S_S = 0.0251$
- Lower Level Earthquake Ground Motion for a Long Period (1.0 seconds): $S_1 = 0.0076$
- Upper Level Earthquake Ground Motion for a Short Period (0.2 seconds): $S_S = 0.139$
- Upper Level Earthquake Ground Motion for a Long Period (1.0 seconds): $S_1 = 0.047$

These values are considered constant and are the same for all seismic assessments of bridges in the Syracuse area.

The Site Class is based on the soil conditions at the bridge location. It was determined that this parameter has little effect on the results of the seismic assessment because the spectral

acceleration values for the Syracuse area are small. Based on this, a site class of D was used for all seismic assessments of bridges in the Syracuse area.

Bridge parameters used in the seismic assessment were retrieved from the record drawings and WinBolts data.

The seismic assessment takes into account the anticipated service life, importance, and the seismic exposure of the bridge to determine a seismic retrofit category (SRC). The SRC is then used to determine seismic evaluation methods and retrofit measures. There are four SRCs, A through D. Seismic retrofit category A is the lowest category; bridges in this category do not require retrofits or further seismic evaluation. Seismic retrofit category D is the highest category; bridges in this category requiring the most rigorous seismic evaluations and retrofits.

ASSESSMENT RESULTS

The SRC for the bridge is "**C**" for lower level earthquake ground motion and "**B**" for upper level earthquake ground motion.

RETROFITS REQUIRED

Bearing replacements and seat width improvements are not required at the abutments or pier. Additional retrofits may be required if further seismic evaluation is needed.

RECOMMENDATIONS FOR FURTHER SEISMIC EVALUATION

For the lower level earthquake ground motion, it is recommended that capacity/demand ratios for bridge components are calculated as per Section 5.4 of the referenced manual. For the upper level earthquake ground motion, it is recommended that the capacities of the bearings are checked as per Section 5.2 of the referenced manual.

Retrofit cost estimates will be provided after any further required seismic evaluations are completed.

ENGINEERS
DESIGN BUILD
TECHNICAL RESOURCES
OPERATIONS

C&S Engineers, Inc.
Syracuse Hancock International Airport
Syracuse, NY 13212
phone 315-455-2000
fax 315-455-9667
www.cscos.com

TECHNICAL MEMORANDUM

TO: **FILE (190.514.001)**

FROM: **PAUL BYRNE, P.E.**
NYSPE 055928

DATE: **JUNE 9, 2014**

C&S PROJECT NO.: 190.514.001

RE: **NEW YORK STATE DEPARTMENT OF TRANSPORTATION**
D031085; PIN 3501.60; I-81 Opportunities, BIN 1069151 Fatigue Evaluation

---

This memorandum documents a fatigue evaluation conducted for the existing Interstate 81 Viaduct Project. Existing structures with AASHTO Category D, E, and E' fatigue-prone details require 100% hands-on inspection unless proven to be exempt. The purpose of the evaluation is to assess the remaining life of fatigue-prone components.

EVALUATION PROCEDURES

The fatigue evaluation was performed in accordance with the AASHTO Guide Specification for Fatigue Evaluations of Existing Steel Bridges, 1990. Fatigue-prone welds identified in the biennial inspection reports were located on record drawings and confirmed visually in the field. Additional information concerning fatigue-prone welds located in BIN folders was also obtained and reviewed prior to inspection.

EVALUATION RESULTS

The results of the fatigue evaluation of the existing bridge are shown below. The remaining safe fatigue life of the fatigue components has **not been exhausted**.

Fatigue Detail Location	Remaining Safe Fatigue Life (Years)	Remaining Mean Fatigue Life (Years)
Span 1, Interior Girders, Gusset Plate at Bottom Flange	52.15	335.03
Span 1, Interior Girders, Gusset Plate at Top Flange	891.03	4462.94
Span 1, Exterior Girders, Gusset Plate at Bottom Flange	43.46	292.25
Span 1, Exterior Girders, Gusset Plate at Top Flange	876.89	4393.36

E. Recommendations:

The purpose of this deck evaluation is to document and determine existing conditions of the deck. It will be used as a tool for developing the scope of work and cost estimates for the development and comparison of alternatives for the overall project.

The total delaminated area is approximately 6% of the total deck area. Due to the age, condition and high chloride-ion content of the bridge deck concrete, the bridge deck should be rehabilitated or replaced to meet current standards and to mitigate excessive future maintenance costs.

Option 1 – Scarify and Bridge Deck Overlay
The maximum service life this option would provide is 25 years. The design life of this project is 30 years (ETC +30). This option does not meet the project objective of obtaining 30+ years of service life.

Option 2 – Bridge Deck Rehabilitation with 100% Deep Removal
This option will involve partial depth reconstruction with top mat rebar exposure of the entire bridge deck to remove the chloride contaminated concrete (100% deep removal). The existing bridge deck thickness is 9 ¼" with 3 ¼" of concrete cover over the top mat of reinforcing. The proposed partial depth reconstruction will include the addition of ¼" of concrete to provide the standard 9 ½" bridge deck thickness. The existing top mat of reinforcing bars will be removed and replaced to accommodate the standard 3" of concrete cover. The existing non-conforming bridge railing will be removed and replaced with new single-slope concrete bridge barrier. The existing approach slabs will receive the same repair treatment as the deck. The existing deteriorated bridge joints will be replaced with armorless bridge joints. The Level 1 Load Rating for the final condition was found to be acceptable. This option would provide a service life of 35 years to the bridge deck. The construction cost of this option is $1.25 million.

Option 3 – Bridge Deck Replacement with Cast-In-Place Concrete

This option would involve the complete demolition of the existing bridge deck, 2-rail bridge rail, bridge deck joints and approach slabs. The bridge deck will be replaced with a new concrete deck, single-slope barrier and new armorless bridge joints. The approach slabs would also be replaced under this option. The new bridge deck would be 9 ½" standard thickness as compared to the 9 ¼" existing thickness. The Level 1 Load Rating for the final condition was found to be acceptable. This option would provide a service life of 40 years to the bridge deck. The construction cost of this option is $1.46 million.

Option 4 – Bridge Deck Replacement with Pre-cast Concrete Deck Panels

This option will have the highest construction cost of all of the options however; traffic control costs may be lower due to reduced construction time. Comparison of accelerated construction to conventional construction is beyond the scope of work for this project at this time.

IN-DEPTH INSPECTION REPORT

D031085 P.I.N. 3501.60

B.I.N. 1069152

TEAM LEADER Andrew J. Fuller, P.E. 59848
NYSPE LICENSE #

ASSISTANT TEAM LEADER Jeffrey M. Reina, P.E.
ASSISTANT TEAM LEADER Logan Bessel
ASSISTANT TEAM LEADER Jerome Getter

FEATURE CARRIED I - 481 Northbound
FEATURE CROSSED Jamesville Road

DATE FIELD WORK BEGAN December 19 , 2013
DATE FIELD WORK COMPLETED February 6. 2014

TABLE OF CONTENTS

- TP 349 & 350
- IN-DEPTH CONDITION DOCUMENTATION
- IN-DEPTH PHOTO DOCUMENTATION
- ASBESTOS REPORT

TP 349 & TP 350

BRIDGE ELEMENT RATINGS

Inspection Date: 5/9/2011 RC: 33 BIN: 1069152

Bridge Ratings

Carried: 481I 481I33012026 Crossed: JAMESVILLE RD CR7 CheckValue: 1,777,522,238

Inspection Agency: 10 - NYSDOT Type of Inspection: 1 - BIENNIAL
GTMS: 402 -- Steel Continuous - Stringer/Multi-Beam or Girder
POSTINGS: See Gen Rec Page 1 for Postings at time of inspection.
Further Investigation Needed: No
State Highway Number: 76-2 Milepoint: 3.3 AADT/Yr: 12585 / 2007
Orientation: 2 - Northeast Political Unit: 0233 - Town of DEWITT Year Built: 1980
Total Spans: 2 Ramp Bridge Attached To Span: NA BIN: NA
General Recommendation: 5 Computed Condition Rating: 4.986

Abutment Ratings:	Beg Abut	End Abut
Joint with Deck	6	6
Bearings, Bolts, Pads	6	6
Seats and Pedestals	6	6
Backwall	5	5
Stem (Breastwall)	5	5
Erosion or Scour	5	5
Footings	9	9
Piles	9	9
Recommendation	6	6

Wingwall Ratings:	Beg Abut	End Abut
Walls	5	5
Footings	9	9
Erosion or Scour	6	6
Piles	9	9

Channel Ratings:	Channel
Stream Alignment	5
Erosion and Scour	6
Waterway Opening	6
Bank Protection	6

Approach Ratings:	Approaches
Drainage	4
Embankment	5
Settlement	4
Erosion	4
Pavement	3
Guide Railing	5

Number of Flags Issued:

RED: 0 Yellow: 0 Safety: 0

Vulnerability Reviews Recommended: 1=Yes, 2=No, 3=NA, X=NotActive

Hydraulic: 2	Overload: X	Steel: 2
Collision: 2	Concrete: X	Seismic: X

Inspector's Signature: CheckValue: 1,777,522,238 Date: 5/9/2011

David Hann,PE () (Inspector ID:3000055)

Signed copy of this inspection report is available in the appropriate NYSDOT Regional Office

Reviewed By: Date: 6/28/2011

James R. Manning,PE () (QC ID:3000023)

Signed copy of this inspection report is available in the appropriate NYSDOT Regional Office

Inspection Date: 5/9/2011 RC: 33 BIN: 1069152

Span Ratings

Carried: 481I 481I33012026 Crossed: JAMESVILLE RD CR7 CheckValue: 1,777,522,238

Deck Element Ratings:	001	002
Wearing Surface	4	4
Curbs	4	5
Sidewalks, Fascias	5	5
Railings, Parapets	5	5
Scuppers	8	8
Gratings	8	8
Median	8	8
Mono Deck Surface	6	6

Superstructure Ratings:	001	002
Structural Deck	5	5
Primary Members	5	5
Secondary Members	5	5
Paint	4	4
Joints	8	8
Recommendation	6	6

Pier Ratings:	001	002
Bearings, Bolts, Pads	5	8
Pedestals	5	8
Top of Cap or Beam	6	8
Stem Solid Pier	8	8
Cap Beam	5	8
Pier Columns	6	8
Footings	9	8
Erosion or Scour	6	8
Piles	9	8
Recommendation	6	8

Utility Ratings:	001	002
Lighting	8	8
Sign Structure	8	8
Utilities and Support	8	8

Field Notes:

Field Date	Arrival	Departure	Temp (C)	Temp (F)	Weather Conditions
4/27/2011	10:00:00 AM	3:00:00 PM		70	Mostly sunny
4/28/2011	10:00:00 AM	11:00:00 AM		70	Partly cloudy
5/4/2011	8:30:00 AM	2:30:00 PM		45	Overcast
5/9/2011	8:30:00 AM	1:30:00 PM		65	Sunny

IN-DEPTH CONDITION DOCUMENTATION

IN DEPTH INSPECTION REPORT

BIN 1069152

Visual Inspection

The bridge was constructed in 1980. The deck joints were replaced in 1995 under contract D256745. In 2006 under contract D260442, miscellaneous concrete repairs were made, new bearings were installed, and a new deck overlay and bridge joints were placed.

Cracks, spalls, and other field observations are shown on the plans. Below is a brief summary of conditions for each feature.

Superstructure

Deck – See Bridge Deck Evaluation Report

Steel – See Structural Steel Inspection Summary

Bearings – Bearing elements typically had minor rust scale. The outer bearings on the pier had moderate rust buildup.

Substructure

West Abutment – The concrete pedestals contained only minor isolated areas of delaminated concrete and cracking. The stem contained delamination between pedestals 2 to 3 and 4 to 5. The backwall had delaminated concrete near pedestals 1, 5, and 6. The wingwalls had minor isolated areas of delaminated concrete and cracking.

Pier 1 – The concrete cap beam, pedestals and columns contained only minor isolated areas of delaminated concrete and cracking.

East Abutment – The concrete backwall, stem, and pedestals contained only minor isolated areas of delaminated concrete. The stem contained some cracking around existing concrete repairs. The wingwalls had minor isolated areas of delaminated concrete and cracking.

BIN 1069152

Special Emphasis Inspection Required

Non-Redundant/Fracture Critical Members – No

Pin and Hangers – No

Fatigue-Prone Welds – Yes

Non-Categorized Fatigue-Prone Details – No

Other (Specified in Text) – No

Special Emphasis Details

Gusset plate welds require 100% hands-on inspection. No defects were observed.

Overall Steel Condition

Isolated pockets of up to 20% section loss were observed on the bottom flanges of the fascia girders. Exterior girders displayed the most significant deterioration. The interior girders were less deteriorated.

Paint

The lower outer fascia flanges, top surface, were pitted and flacking for the full lengths. The bottom flanges of the fascia girders contained the most paint deterioration, specifically the top surface of the bottom flange, which contained widespread paint delamination with isolated pockets of pitting rust.

Section Loss

Due to the age of the steel, a blanket 5% section loss to the bottom flanges should be used in conjunction with localized areas of greater section loss of the fascia girders in load rating.

.

DRAWN BY CADD CHECKED BY DATE

ESTIMATED BY CHECKED BY DATE

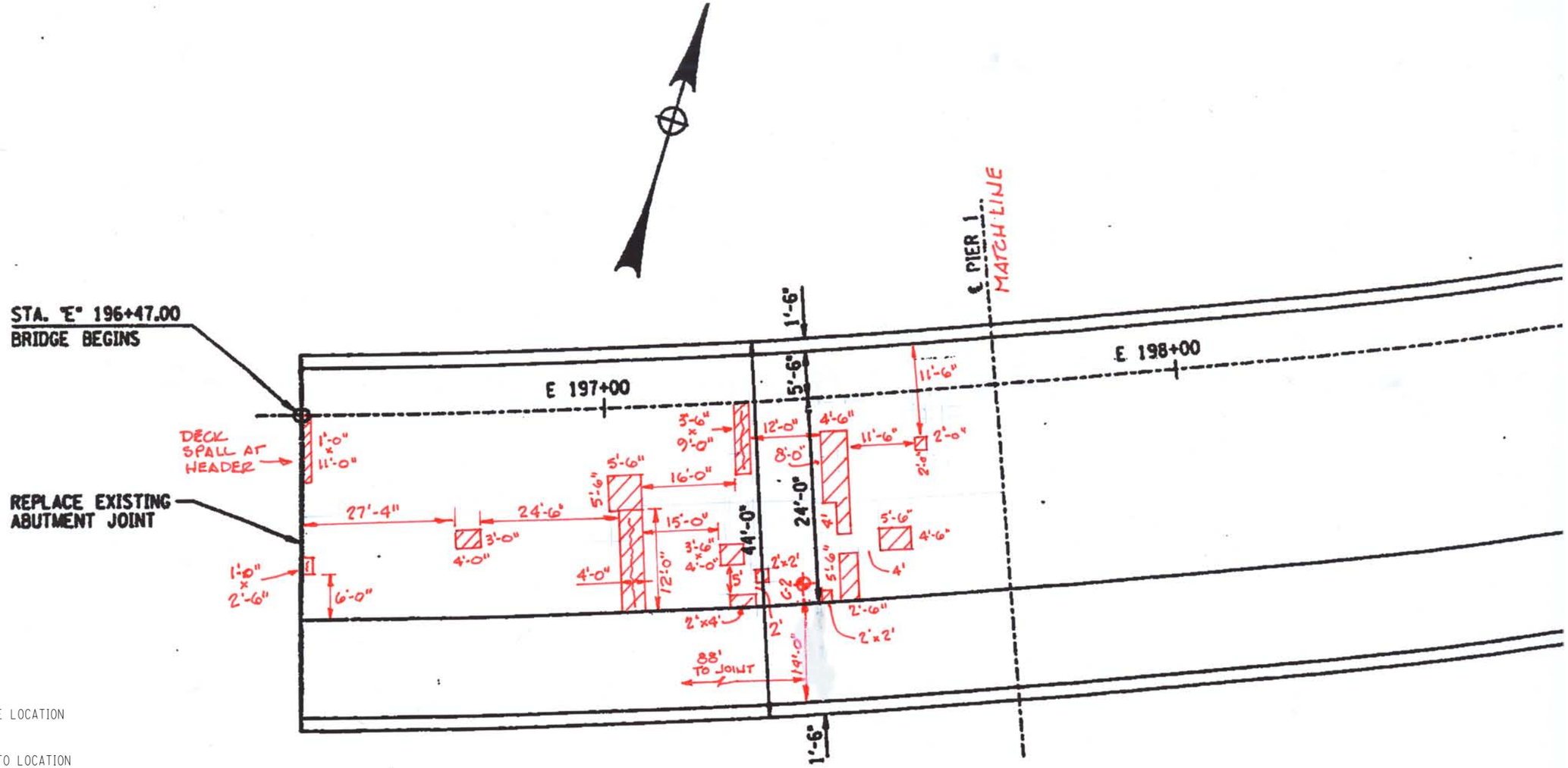

LEGEND

- C-X — CORE LOCATION
- XX — PHOTO LOCATION
- DELAMINATION
- SPALLING
- CRACK
- MAP CRACKING
- MOISTURE

I-481 NB OVER JAMESVILLE ROAD

PLAN VIEW

BIN 1069152
I 481 NB OVER
JAMESVILLE ROAD
BRIDGE DECK - SPAN 1



FED. ROAD REG. NO.	STA
1	N.
INTERSTA	

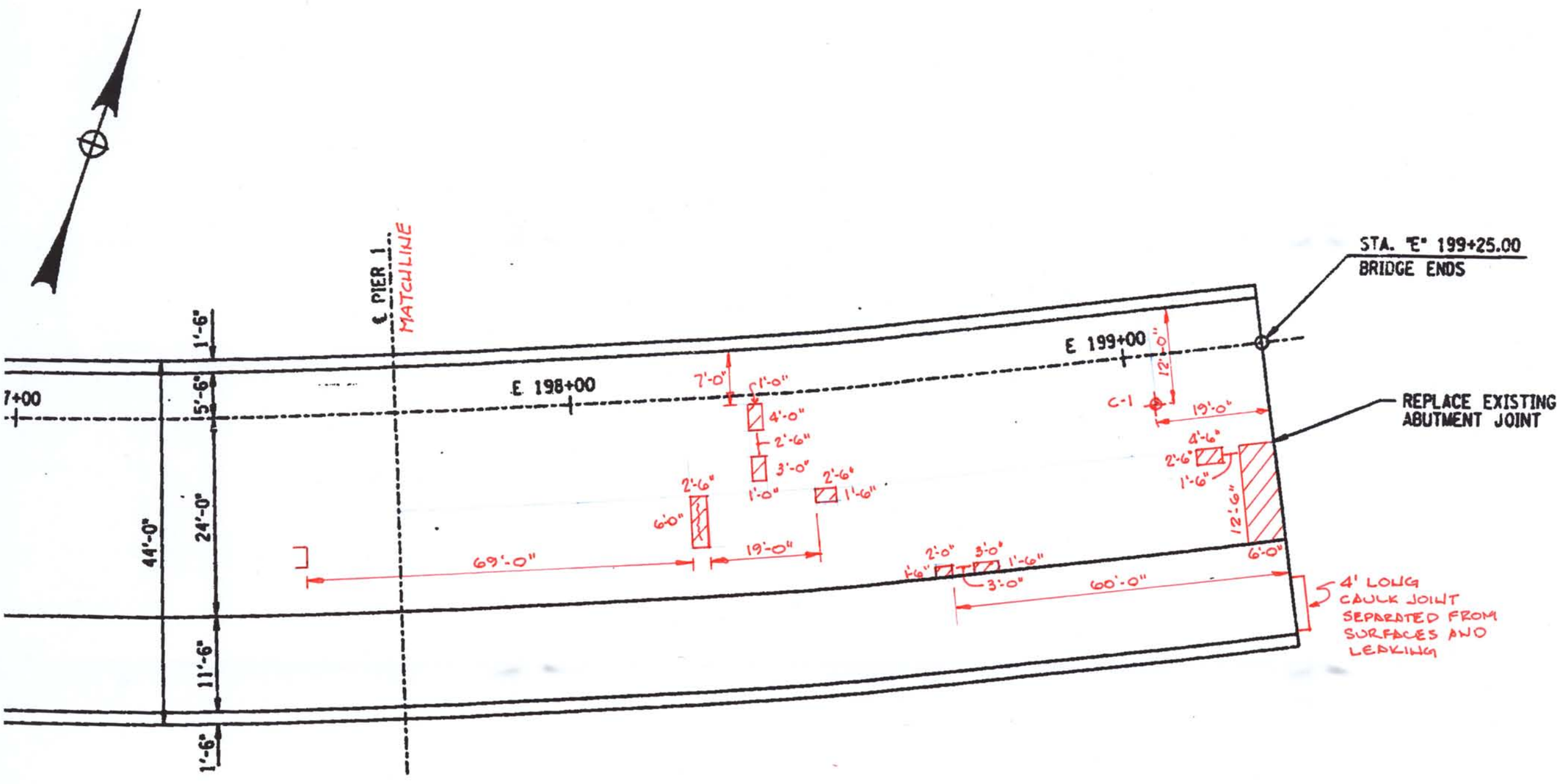

LEGEND

- CORE LOCATION
- PHOTO LOCATION
- DELAMINATION
- SPALLING
- CRACK
- MAP CRACKING
- MOISTURE

I-481 NB OVER JAMESVILLE ROAD

PLAN VIEW

BIN 1069152
I481 NB over
Jamesville Road
Bridge Deck - Span 2

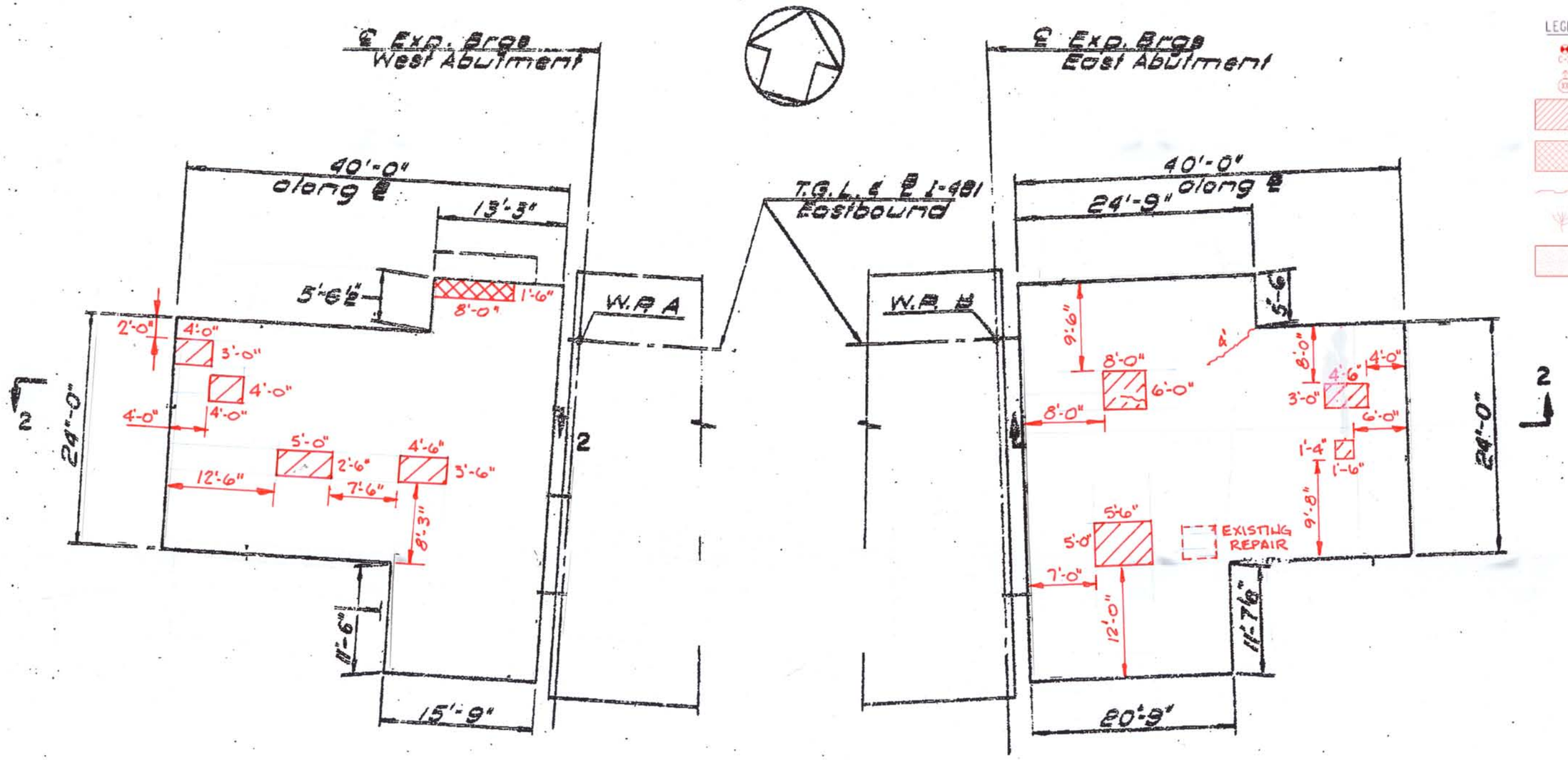

APPROACH SLAB PLANS

BIN 1069152
I-481 NB over
JANESVILLE ROAD
BRIDGE DECK-APPROACH SLABS

DRAFTED BY J. PAPA CHECKED BY

ESTIMATED BY CHECKED BY J. FOX

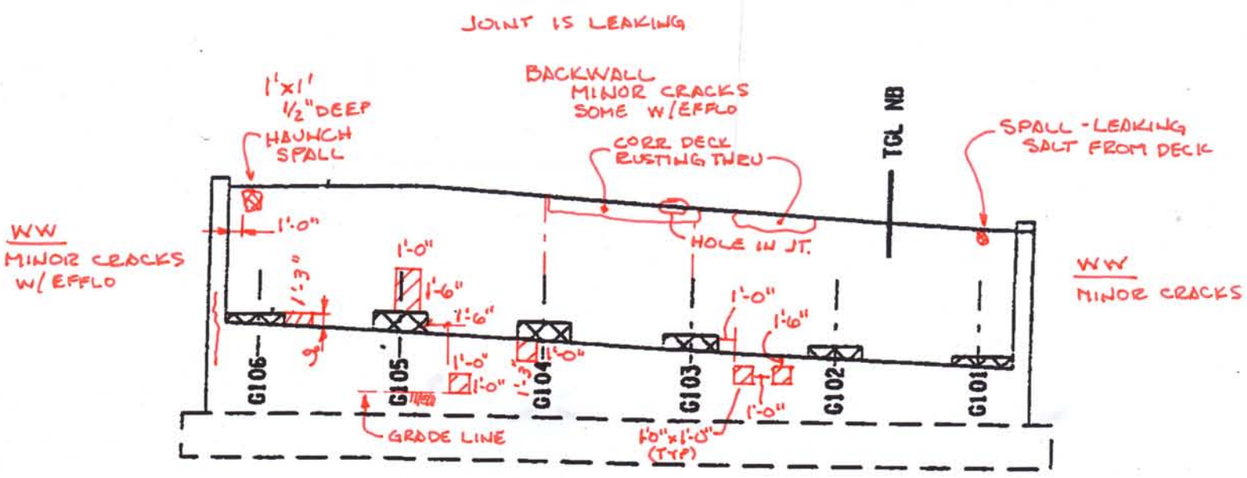

I-481 NB OVER JAMESVILLE RD.
WEST ABUTMENT ELEVATION

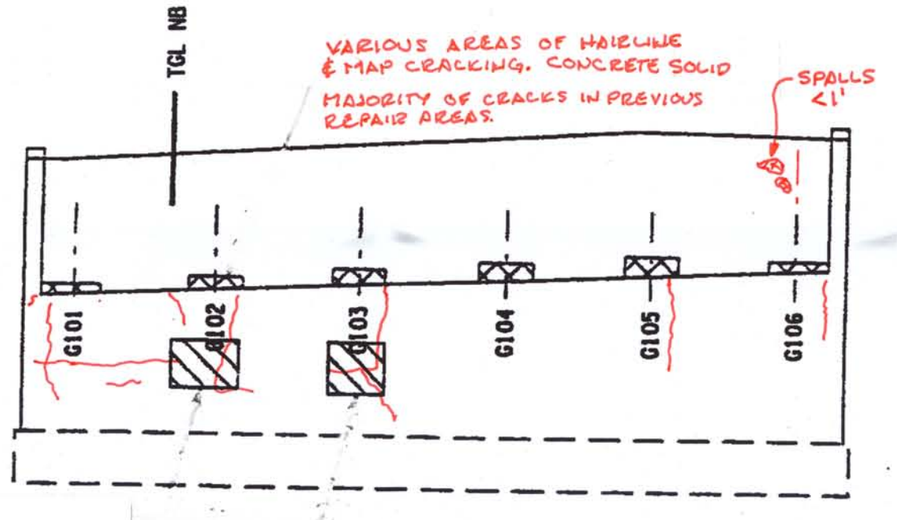

I-481 NB OVER JAMESVILLE RD.
EAST ABUTMENT ELEVATION

BIN 1069152

LEGEND

- CORE LOCATION (C-X)
- PHOTO LOCATION (XX)
- DELAMINATION
- SPALLING
- CRACK
- MAP CRACKING
- MOISTURE

LEGEND

LEGEND

- C-X — CORE LOCATION
- XX — PHOTO LOCATION
- DELAMINATION
- SPALLING
- CRACK
- MAP CRACKING
- MOISTURE

NOTES: CONCRETE APPEARS TO BE IN GOOD CONDITION WITH ONLY MINOR ISOLATED DELAMINATION AND CRACKING

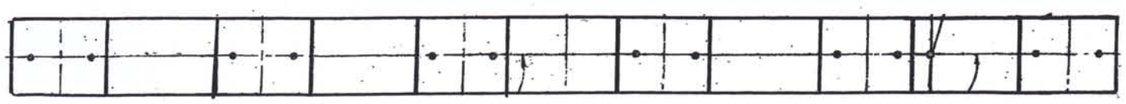

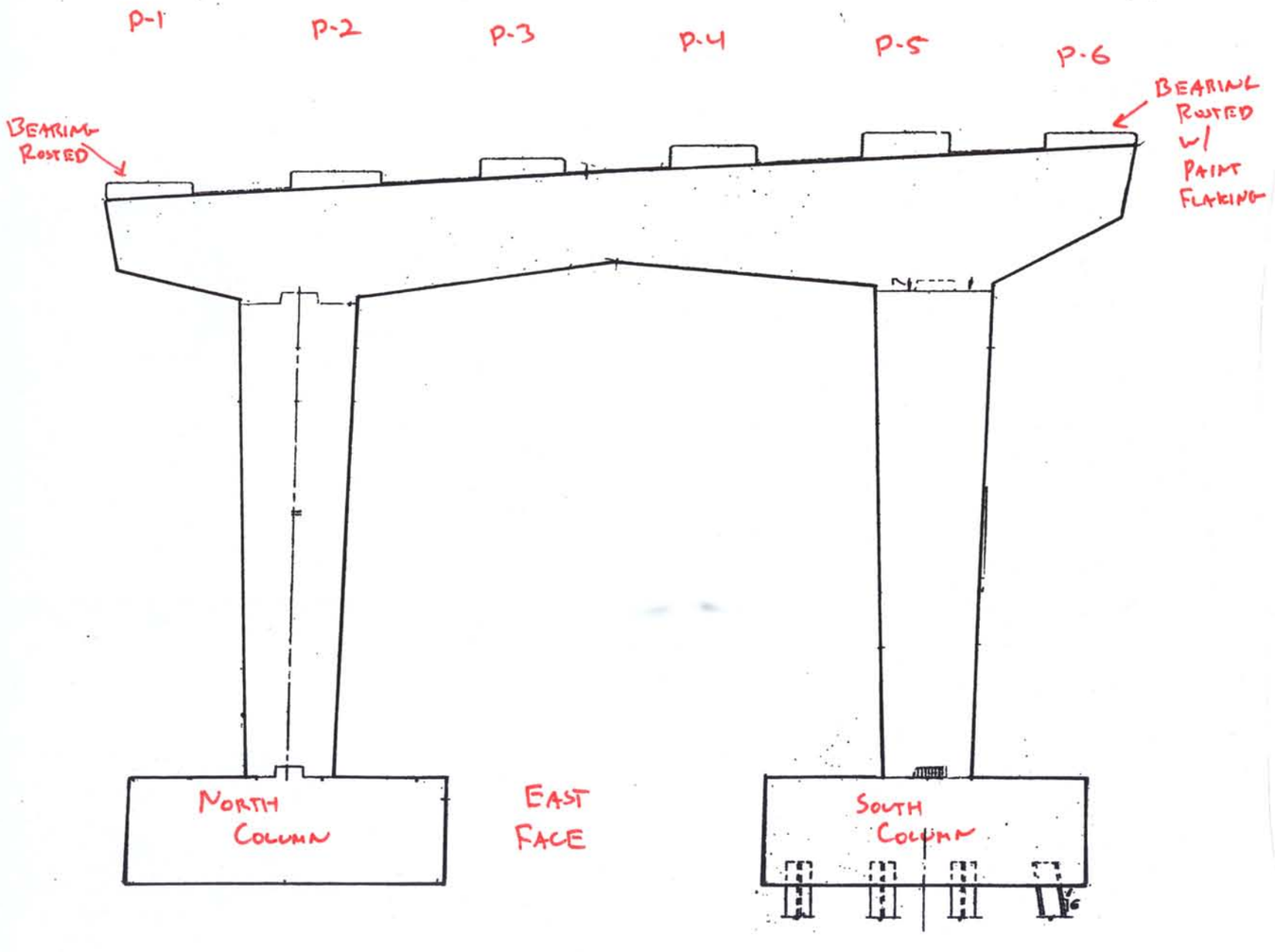

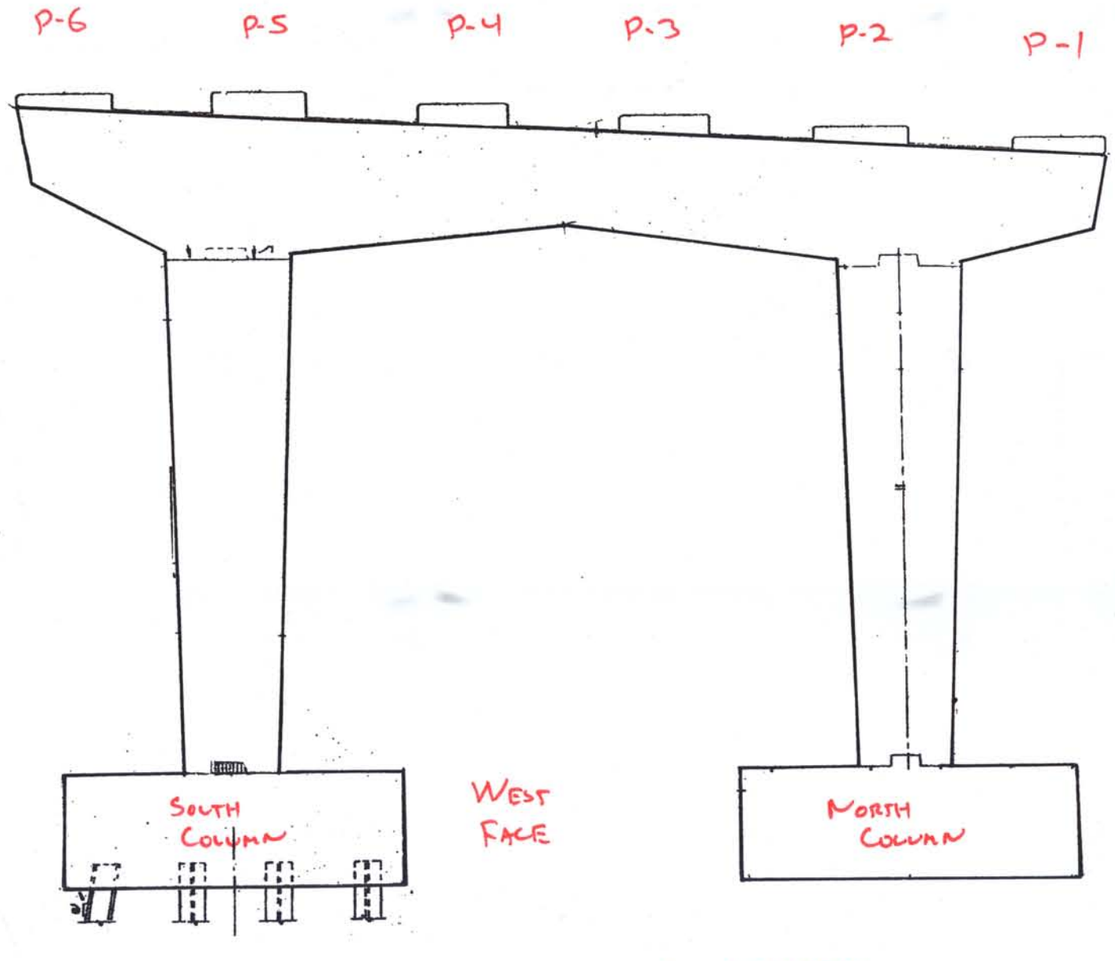

BIN 1069152
I-481 NB over JAMESVILLE ROAD
PIER 1

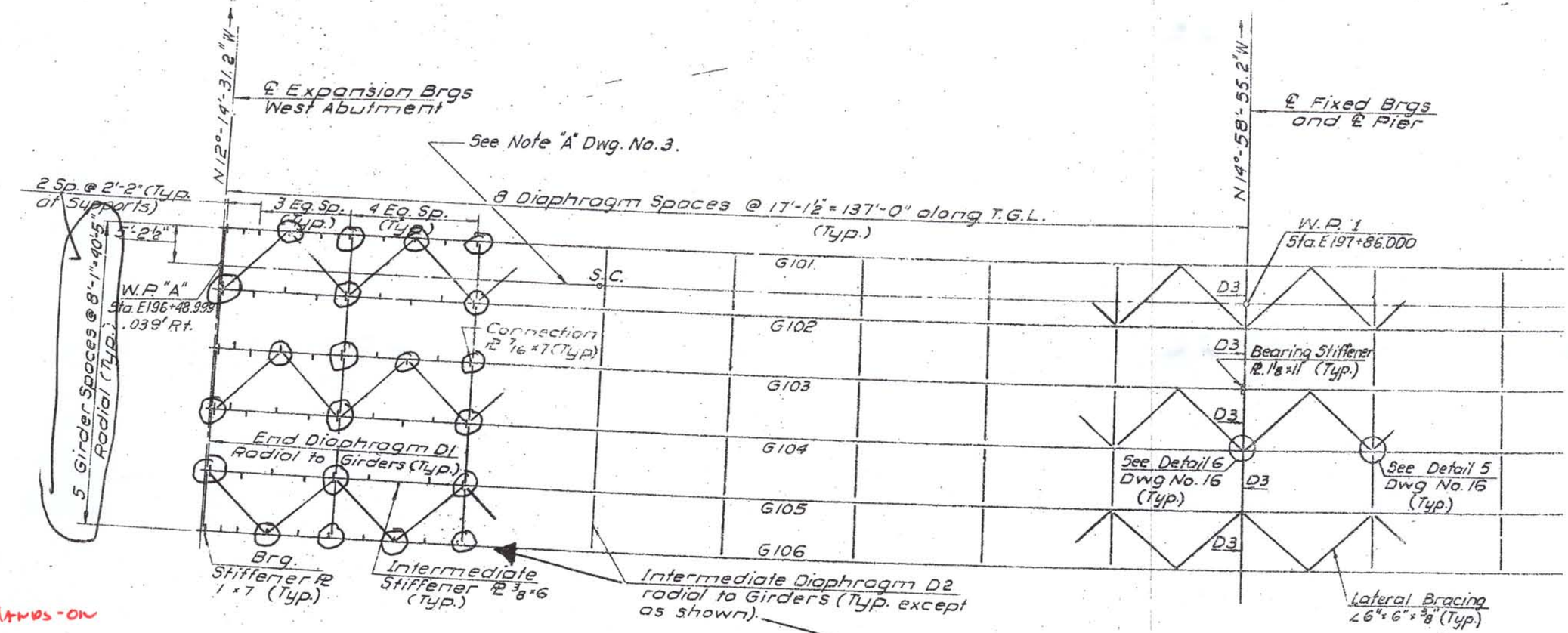

NOTES:
100% HANDS-ON INSPECTION OF GUSSET PLATES PERFORMED. NO DEFECTS IN WELDS WERE OBSERVED.

FRAMING PLAN
Scale: 1" = 10'

"Ø & E" WELDS ARE AT EACH CROSS-MEMBER OR EA. STIFFENER

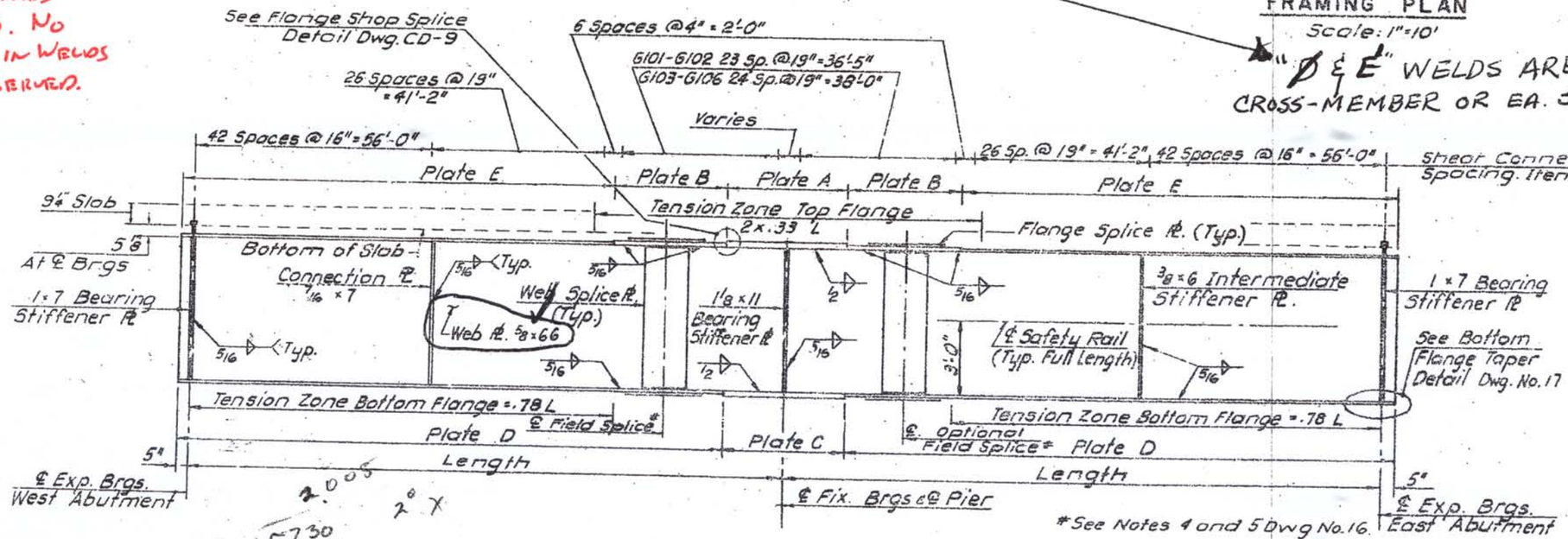

GIRDER ELEVATION
Not to Scale

BIN 1069152
RT 481/NB OVER JAMESVILLE ROAD
SPAN 1

1069152

D36042

SPAN 2 FATIGUE Inspection completed 12/20/13

FED. ROAD REG. NO.	STATE	FEDERAL AID PROJECT NO.	SHEET NO.	TOTAL SHEETS
1	N. Y.	I-IG-481-2(74) I-III-81-2(129)	515	571

INTERSTATE ROUTE CONNECTION 571
FOREST INTERCHANGE - JAMESVILLE
ONONDAGA COUNTY

LEGEND
- CORE LOCATION (C-X)
- PHOTO LOCATION (XX)
- DELAMINATION
- SPALLING
- CRACK
- MAP CRACKING
- MOISTURE

N14°-58'-55.2"W

℄ Fixed Brgs and ℄ Pier

BEARING RUSTED.
W.P. 1
Sta. E197+86.000

R=2864.79'

See Detail 3 Dwg. No. 16 (Typ.)

10' FASCIA CRACK, SPALL AND HOLLOW SOUNDING

N17°-43'-19.2"W

℄ Expansion Brgs East Abutment

H.C.L., P.O.R., T.G.L. ℄ I-481 Eastbound

5'-2½"

W.P. "B"
Sta. E199+23.000

See Detail 2 Dwg. No. 16. (Typ.)

D3 Bearing Stiffener Pl. 1⅛×11 (Typ.)

See Detail 6 Dwg No. 16 (Typ.)

See Detail 5 Dwg No. 16 (Typ.)

Lateral Bracing ∠6"×6"×⅜" (Typ.)

BEARING RUSTED WITH SOME PAINT FLAKING

ISOLATED AREAS ON BOTTOM FLANGE OF FASCIA GIRDERS SHOWING 20% SECTION LOSS.

NOTE:
Girder Webs, Flanges, Stiffeners, Connection Plates, Splice Pl's and Diaphragms shall conform to Current A.S.T.M. Designation A 36.

FRAMING PLAN
Scale: 1"=10'

"Ø & E" WELDS ARE AT EACH CROSS-MEMBER OR EA. STIFFENER

'9" = 41'-2", 42 Spaces @ 16" = 56'-0"

Shear Connector Spacing. Item 602.03

Plate E

ge Splice Pl. (Typ.)

⅜×6 Intermediate Stiffener Pl.

1×7 Bearing Stiffener Pl

ty Rail

See Bottom

5/16 *

Pl. ⅜×6

5/16

Tight Fit *

** 5/16

Pl. 7/16×7

5/16

Tight Fit **

BIN 1069152
RT 481 NB over JAMESVILLE ROAD
SPAN 2

LEGEND:
* Tight fit in Tension Zone. Weld in Compression Zone See Girder Elevations for limits of Tension Zones
** See Superstructure Notes 3

IN-DEPTH PHOTO DOCUMENTATION

C&S Engineers, Inc.
499 Col. Eileen Collins Blvd.
Syracuse, New York 13212
Phone: (315) 455-2000
Fax: (315) 455-9667
www.cscos.com

I-481 NB over Jamesville Rd - BIN 1069152



DESCRIPTION: WEST ABUTMENT – BACKWALL – BETWEEN PEDESTAL 1 AND CHEEKWALL – SPALLING CONCRETE WITH SALT STAINING

PHOTO 1



DESCRIPTION: WEST ABUTMENT – STEM – BETWEEN PEDESTALS 2 AND 3 – DELAMINATED CONCRETE

PHOTO 2

C&S Engineers, Inc.
499 Col. Eileen Collins Blvd.
Syracuse, New York 13212
Phone: (315) 455-2000
Fax: (315) 455-9667
www.cscos.com

I-481 NB over Jamesville Rd - BIN 1069152



DESCRIPTION: WEST ABUTMENT – STEM – BELOW PEDESTAL 4 – DELAMINATED CONCRETE

PHOTO 3



DESCRIPTION: WEST ABUTMENT – STEM – BETWEEN PEDESTAL 4 AND 5 - DELAMINATION

PHOTO 4

C&S Engineers, Inc.
499 Col. Eileen Collins Blvd.
Syracuse, New York 13212
Phone: (315) 455-2000
Fax: (315) 455-9667
www.cscos.com

I-481 NB over Jamesville Rd - BIN 1069152



DESCRIPTION: WEST ABUTMENT – BACKWALL – ABOVE PEDESTAL 5 – DELAMINATED CONCRETE

PHOTO 5



DESCRIPTION: WEST ABUTMENT – BACKWALL – PEDESTAL 6 – DELAMINATED CONCRETE

PHOTO 6

C&S Engineers, Inc.
499 Col. Eileen Collins Blvd.
Syracuse, New York 13212
Phone: (315) 455-2000
Fax: (315) 455-9667
www.cscos.com

I-481 NB over Jamesville Rd - BIN 1069152



DESCRIPTION: WEST ABUTMENT – BACKWALL – ABOVE PEDESTAL 6 – SPALLING ON HAUNCH

PHOTO 7



DESCRIPTION: WEST ABUTMENT – STEEL DECKPAN – BETWEEN PEDESTALS 3 AND 4 – RUST ALONG EDGES

PHOTO 8

C&S Engineers, Inc.
499 Col. Eileen Collins Blvd.
Syracuse, New York 13212
Phone: (315) 455-2000
Fax: (315) 455-9667
www.cscos.com

I-481 NB over Jamesville Rd - BIN 1069152



DESCRIPTION: WEST ABUTMENT – PEDESTAL 2 – TYPICAL CONCRETE AND BEARING

PHOTO 9



DESCRIPTION: SPAN 1 – BAY 5 – AT PIER 1 FACING WEST – TYPICAL STEEL AND DECK PANS

PHOTO 10

C&S Engineers, Inc.
499 Col. Eileen Collins Blvd.
Syracuse, New York 13212
Phone: (315) 455-2000
Fax: (315) 455-9667
www.cscos.com

I-481 NB over Jamesville Rd - BIN 1069152



DESCRIPTION: SPAN 1 – BAY 5 – AT PIER 1 FACING WEST – TYPICAL STEEL

PHOTO 11



DESCRIPTION: PIER 1 – WEST FACE – PEDESTAL 1 – BEARING - RUST (SIMILAR TO BEARING 6)

PHOTO 12

C&S Engineers, Inc.
499 Col. Eileen Collins Blvd.
Syracuse, New York 13212
Phone: (315) 455-2000
Fax: (315) 455-9667
www.cscos.com

I-481 NB over Jamesville Rd - BIN 1069152



DESCRIPTION: PIER 1 – WEST FACE – BEARING 3-TYPICAL OF INNER BEARINGS

PHOTO 13



DESCRIPTION: SPAN 2 – GIRDER 1 – AT EAST ABUTMENT FACING WEST – STEEL PITTING AND PAINT FLAKING

PHOTO 14

C&S Engineers, Inc.
499 Col. Eileen Collins Blvd.
Syracuse, New York 13212
Phone: (315) 455-2000
Fax: (315) 455-9667
www.cscos.com

I-481 NB over Jamesville Rd - BIN 1069152



DESCRIPTION: SPAN 2 – GIRDER 6 – AT EAST ABUTMENT FACING WEST – STEEL PITTING AND PAINT FLAKING

PHOTO 15



DESCRIPTION: EAST ABUTMENT – BACKWALL – BETWEEN PEDESTAL 1 AND CHEEKWALL – SPALLING IN HAUNCH

PHOTO 16

C&S Engineers, Inc.
499 Col. Eileen Collins Blvd.
Syracuse, New York 13212
Phone: (315) 455-2000
Fax: (315) 455-9667
www.cscos.com

I-481 NB over Jamesville Rd - BIN 1069152



DESCRIPTION: EAST ABUTMENT – STEM – CRACKING AROUND EXISTING REPAIRS (TYPICAL)

PHOTO 17



DESCRIPTION: EAST ABUTMENT – BACKWALL – BEHIND PEDESTAL 6 - SPALLING

PHOTO 18

C&S Engineers, Inc.
499 Col. Eileen Collins Blvd.
Syracuse, New York 13212
Phone: (315) 455-2000
Fax: (315) 455-9667
www.cscos.com

I-481 NB over Jamesville Rd - BIN 1069152



DESCRIPTION: EAST ABUTMENT – PEDESTAL AND BEARING 2 - TYPICAL

PHOTO 19



DESCRIPTION: NORTHWEST WINGWALL – FACING SOUTH – MINOR MAP CRACKING (TYPICAL)

PHOTO 20

C&S Engineers, Inc.
499 Col. Eileen Collins Blvd.
Syracuse, New York 13212
Phone: (315) 455-2000
Fax: (315) 455-9667
www.cscos.com

I-481 NB over Jamesville Rd - BIN 1069152



DESCRIPTION: WEST ABUTMENT – FACING WEST

PHOTO 21



DESCRIPTION: PIER 1 – FACING NORTH

PHOTO 22

C&S Engineers, Inc.
499 Col. Eileen Collins Blvd.
Syracuse, New York 13212
Phone: (315) 455-2000
Fax: (315) 455-9667
www.cscos.com

I-481 NB over Jamesville Rd - BIN 1069152



DESCRIPTION: EAST ABUTMENT

PHOTO 23

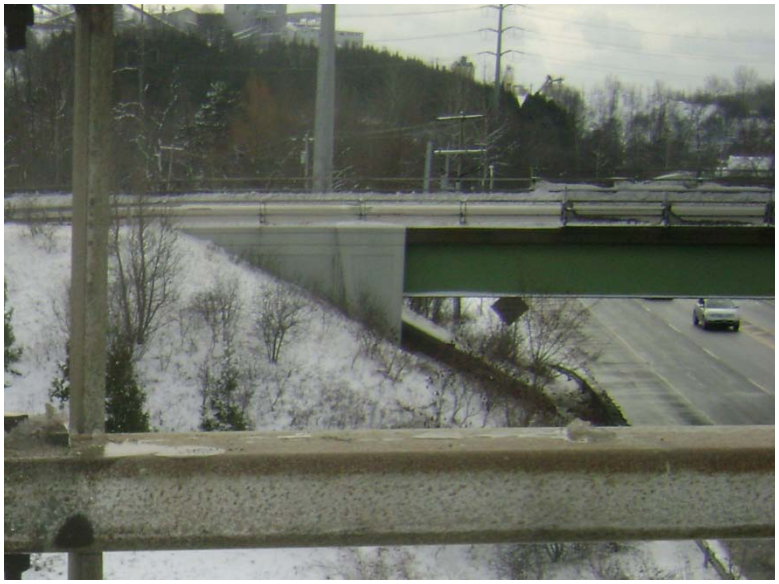

DESCRIPTION: NORTHEAST WINGWALL – FACING SOUTH

PHOTO 24

C&S Engineers, Inc.
499 Col. Eileen Collins Blvd.
Syracuse, New York 13212
Phone: (315) 455-2000
Fax: (315) 455-9667
www.cscos.com

I-481 NB over Jamesville Rd - BIN 1069152



DESCRIPTION: BRIDGE DECK – BEGIN APPROACH – FACING NORTHEAST

PHOTO 25



DESCRIPTION: BRIDGE ELEVATION – FACING NORTH

PHOTO 26

PHOTO LOG MAP

LEGEND

(XX) PHOTO LOCATION

(XX) HIDDEN PHOTO LOCATION

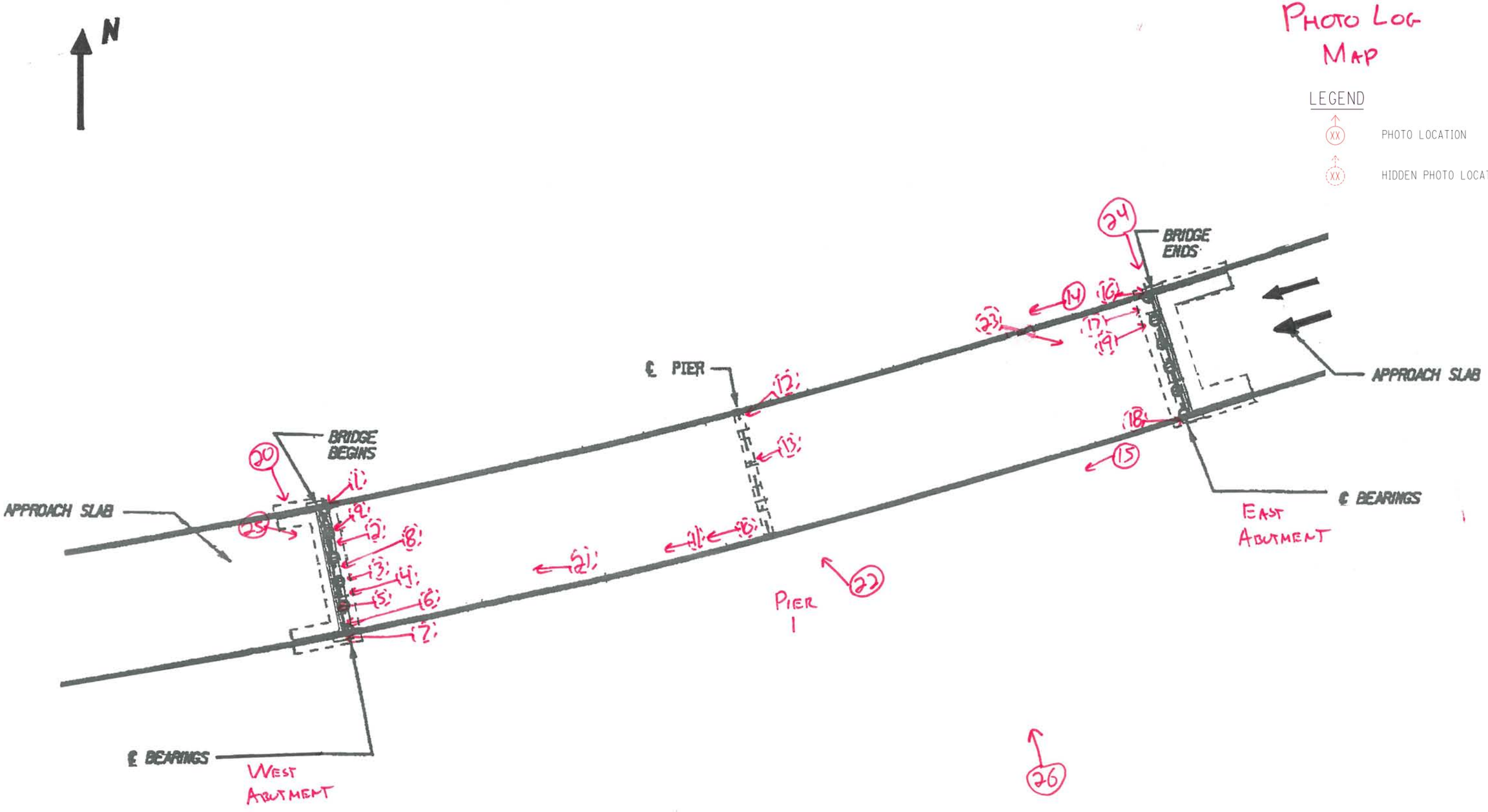

BIN 1069152
I 481 NB OVER
JAMESVILLE ROAD

ASBESTOS DOCUMENTATION

ASBESTOS DOCUMENTATION FROM WATTS ARCHITECTURE & ENGINEERING, INC.

(WILL REPLACE BIN FOLDER ASBESTOS REPORT UPON COMPLETION)

Asbestos Sampling Survey

Location:

BIN 1069152
Interstate Route I-481 North Bound
over CR 7 and Butternut Creek

Prepared for:

New York State
Department of Transportation

PIN 3056.13.111

LaBella Project No. 201001

August 2001

Table of Contents

Page

I. Project Summary 1

II. Site Description 1

III. Inspection Procedures 1

IV. Results 2

Certification 2

Figures and Table

I. Project Summary

In accordance with conditions of Term Agreement D012606, LaBella Associates, P.C. conducted an asbestos sampling survey of the Interstate Route I-481 north bound bridge over CR 7 and Butternut Creek. Based on laboratory analyses of bulk samples collected, no asbestos-containing materials were identified.

II. Site Description

The Site is located in Onondaga County, New York. For the purpose of this report, the Site consists of the Interstate Route I-481 north bound bridge over CR 7 and Butternut Creek. (See attached FIGURE 1 - Site Location Map).

III. Inspection Procedures

The following procedures were used to obtain the data for this Report:

A. A review of record drawings supplied by Region 3 personnel and a visual inspection of the subject structure were conducted to identify potential visible/accessible sources of asbestos-containing materials. Observations and notes were made to provide a description of the structure, and an estimate of the approximate amount, length, or area of ACM present.

B. Physical or operational constraints, which might affect the removal of the ACM, were identified and reported.

C. Bulk samples of suspected ACM were collected during the site inspection of the subject structure. Samples were taken from each homogeneous area that may contain ACM.

D. Samples were submitted for analysis. Preliminary PLM analyses of NOB materials were performed by LaBella Laboratories, a NYSDOH approved laboratory, to determine the presence and percentage of asbestos in each sample. TEM analyses of NOB materials, if necessary, were performed by AMA Analytical, Inc.

E. Lab results were used to determine the approximate location, type, and amount of the verified ACM.

F. A drawing of the structure at the Site was created, in order to show sample locations and the approximate locations and amounts of confirmed ACM observed in accessible locations.

Only accessible areas were inspected. Inaccessible areas, such as areas within the bridge or the approaches to the bridge were not included in this inspection. No investigation was conducted by LaBella Associates to determine the presence of underground utilities on or in the immediate vicinity of the Site. Actual sample locations are shown in the attached FIGURE 2. Results of bulk sample analyses are tabulated in the attached TABLE.

IV. Results

BIN 1069152 Interstate Route I-481 North Bound over CR 7 and Butternut Creek

Based on laboratory analyses of bulk samples collected, no asbestos-containing materials were identified.

Certification

LaBella Associates, P.C. certifies the accuracy of this report, to the best of our knowledge, based on the information collected as described in the Inspection Procedures Section of this investigation.

Figures & Table



N

FIGURE 1
Site Location Map

Interstate Route I-481 North Bound over CR 7 and Butternut Creek Onondaga County, New York

LABELLA

PROJECT NO. 201001

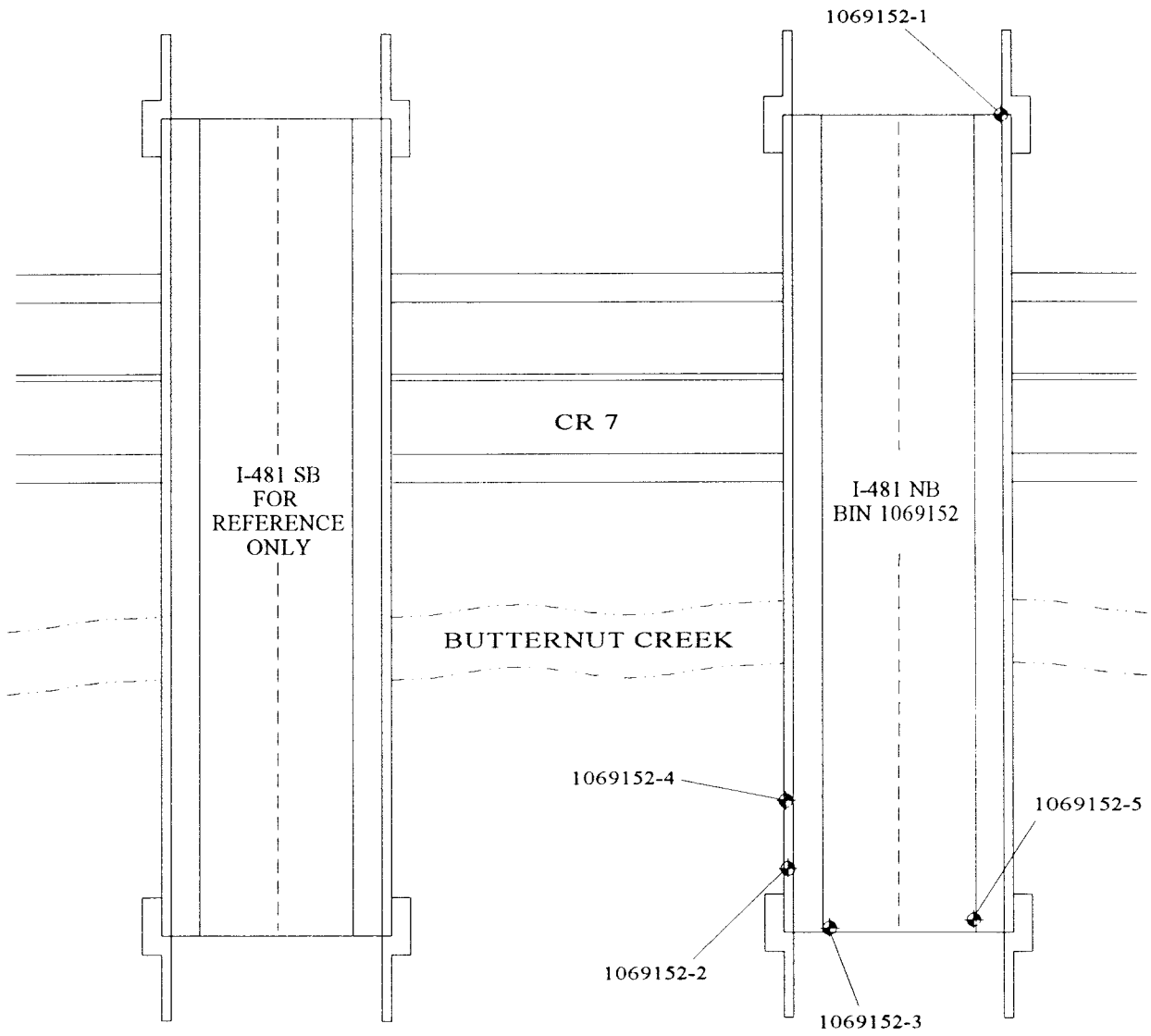

NOTE: NO ASBESTOS-CONTAINING MATERIALS IDENTIFIED.

LEGEND

◆ 1069152-1 SAMPLE LOCATION

NORTH

PROJECT TITLE: ASBESTOS SAMPLING SURVEY 19 BRIDGES ALONG INTERSTATE I-481 ONONDAGA COUNTY, NEW YORK	PROJECT NO. 201001 PIN 3056.13.111
FIGURE TITLE: FIGURE 2 BIN 1069152 I-481 NB OVER CR 7 & BUTTERNUT CREEK SAMPLE LOCATIONS & CONFIRMED ACM	NOT TO SCALE DATE: AUGUST, 2001

Bulk Sample Results Table

Asbestos Sampling Survey
BIN 1069152
Interstate Route I-481 North Bound
over CR 7 and Butternut Creek
Onondaga County, New York
LaBella Project # 201001
PIN 3056.13.111

Sample #	Sample Location	Type of Material	Results % Asbestos	Amount of Material	Specification Item No.
1069152-1	East End of Bridge in Expansion Joint	Black Joint Repair Material	None Detected	N/A	N/A
1069152-2	West End of Bridge on Guide Rail	Brown Construction Adhesive	None Detected	N/A	N/A
1069152-3	West End of Bridge Beneath Bearing	Bearing Pad	None Detected	N/A	N/A
1069152-4	West End of Bridge on I-Beam	Green Paint	None Detected	N/A	N/A
1069152-5	West End of Bridge on Pedestal	Gray Masonry Coating	None Detected	N/A	N/A

HUDSON ENVIRONMENTAL SERVICES, INC.
Mail: 22 Hudson Falls Rd., So. Glens Falls, NY 12803
Delivery: 211 Ferry Blvd., So. Glens Falls, NY 12803
Phone: 518/747-1060 Fax: 518/747-1062

Sampled in 8/1/02 was not Detected For Dem Dum

Rep

ANALYTICAL TEST RESULTS
N.Y.S.D.O.H. LAB ID#11140
*ANALYZED BY N.Y.S.D.O.H. LAB ID#10898

CLIENT: NYSDOT

DATE SAMPLED: 04/09/03

SAMPLE DESCRIPTION: See Below

TIME SAMPLED: 11:00 AM

MATRIX: Solid

DATE SAMPLE RECD: 04/21/03

LOCATION: BIN 1069152

TYPE SAMPLE: Grab

H.E.S. #: See Below

SAMPLER: K.Cook/NYSDOT

NOB BULK MATERIAL ANALYSIS FOR ASBESTOS

HES LAB ID#: 030421L	L01	L02	L03
LAB ID#: E03	984	985	986
CLIENT: SAMPLE ID/DESCRIPTION	1069152, 01 G6 Span 2 10M AHD of pier	1069152, 02 G1 Span 2 1/2 from Beg	1069152, 03 G1 Span 1 1M From Beg
COLOR	Green	Green	Green
HOMOGENEOUS(YES/NO)	Yes	Yes	Yes
ORGANIC %	49	52	50
ACID-SOLUBLE INORGANICS %	14	12	11
INSOL NON-ASBESTOS INORGANIC %	37	36	39
ASBESTOS ANALYSIS			
CHRYSOTILE %			
AMOSITE %			
CROCIDOLITE %			
OTHER AMPHIBOLE %			
TOTAL ASBESTOS % (PLM)	ND	ND	ND
ASBESTOS ANALYSIS			
TYPE OF ASBESTOS			
PERCENTAGE OF ASBESTOS (TEM)	ND	ND	ND
TOTAL	100	100	100

R-3 DESIGN GROU
MAY 5 2003
P.D.E.
Highway Design
Landscape
Env Liaison
Geotech
Hydr
Struc
Survey

Approval By: M L Hanley

Date: 4/30/03

Hudson Environmental Services, Inc. certifies that the services provided were performed in accordance with the New York State Department of Health, Environmental Laboratory Approval Program certification manual. In the event of an error, HES's sole responsibility will be to perform reanalysis at its own expense. HES, Inc. assumes no other liability for damages incurred from the interpretation or use of the analysis provided.

(OVER)

HUDSON ENVIRONMENTAL SERVICES, INC.

Mail: 22 Hudson Falls Road, South Glens Falls, NY 12803
Delivery: 211 Ferry Blvd., South Glens Falls, NY 12803
Phone: 518/747-1060 Fax: 518/747-1062

CHAIN OF CUSTODY RECORD/ Lab Work Request

Client: NYS Dept. of Transportation-Region 3
Client Contact/Person #: Christopher Anderson
Project Location: B.I.N.
Purchase Order:
HES Contact: William Frawley

Mail Address: NYS Dept. of Transportation
333 E. Washington Street
Syracuse, NY 13202
Phone #: (315) 428-4628

HES Use Only Lab ID	Sample ID / Description	Date Collected	TIME A=a.m. P=p.m.	SAMPLE TYPE C=Composite G=Grab MATRIX	C	G	# Conts.	ANALYSIS REQUIRED
030424 L01	1069152-01; G6 span 2; 10m AHD of pier		A P	SO		X	1	Asbestos Bulk - NOB
L02	1069152-02; G1 span 2; 1/2 length		A P	SO		X		" " "
L03	1069152-03; G1 span 1; 1m from Brg		A P	SO		X		" " "

Matrix: B - Soil, SE - Sediment, SO - Solid, SL - Sludge, O - Oil, DW - Drinking Water, GW - Ground Water, SW - Surface Water, L - Leachate, A - Air, Wt - Wipe, DS - Drum Solids, DL - Drum Liquids, X - Other, WW - Waste Water

Special Instructions: Bridge coating - If PLM negative, TEM confirmation on all.

Sampled by: (Signature) [signature]	Date/Time 4/9/03; 11:00A	Received by: (Signature) [signature]	Date/Time 4/24/03 12-mlm
Relinquished by: (Signature)	Date/Time	Received by: (Signature)	Date/Time
Relinquished by: (Signature)	Date/Time	Received by: (Signature)	Date/Time
Dispatched by: (Signature)	Method of Shipment:		Date/Time
Received by Laboratory: [signature]	Date/Time 4/24/03 1:35PM	Turnaround Time: Normal	Lab Approval:

WHITE - Lab Copy YELLOW - Sampler Copy PINK - Generator Copy

HES Use Only

Samples Were:
1. Shipped or Hand Delivered NOTES:
2. Ambient or Chilled NOTES:
3. Received Broken/Leaking (Improperly Sealed) Y N NOTES:
4. Properly Preserved NOTES: Y N
5. Received Within Holding Times Y N NOTES:

COC Tape Was:
1. Present on Outer Package Y N
2. Unbroken on Outer Package Y N
3. Present on Sample Y N
4. Unbroken on Sample NOTES: Y N

COC Record Was:
1. Present upon Receipt of Samples Y N

Discrepancies Between Sample Labels and COC Record? Y N NOTES:

NEW YORK STATE
DEPARTMENT OF TRANSPORTATION
D031085 P.I.N 3501.60

LEVEL 1 LOAD RATING
B.I.N. 1069152
I-481 NB over Jamesville Road

LOAD RATING SUMMARY TABLE (LOAD FACTOR)					
CONTROLLING MEMBER	**CONTROLLING PARAMETER**	**LIVE LOAD**	**LIVE LOAD TYPE**	**INVENTORY RATING**	**OPERATING RATING**
(G5) INTERIOR GIRDER	DESIGN FLEXURE	HS20-44	Lane	HS 27.2 (49.0 TONS)	HS 45.4 (81.8 TONS)
(G5) INTERIOR GIRDER	DESIGN FLEXURE	ALTERNATE MILITARY LOADING	Axle Load	2.879 (69.1 TONS)	4.808 (115.4 TONS)

DOES NOT INCLUDE FUTURE WEARING COURSE

ANALYSIS METHOD:LOAD FACTOR

RECOMMENDED POSTING AS-IS CONDITION: _____ Tons __X__ None

CALCULATED BY:

STATE OF NEW YORK JESSICA S. BAUER No. 084915 LICENSED PROFESSIONAL ENGINEER

DATE: 06/10/14

QUALITY ASSURANCE BY:

STATE OF NEW YORK PAUL F. BYRNE 055928 LICENSED PROFESSIONAL ENGINEER

DATE: 06/10/14

C&S COMPANIES®

499 Col. Eileen Collins Blvd.
Syracuse, NY 13212
phone 315-455-2000
fax 315-455-9667
www.cscos.com

C&S Engineers, Inc.
Syracuse Hancock International Airport
Syracuse, NY 13212
phone 315-455-2000
fax 315-455-9667
www.cscos.com

TECHNICAL MEMORANDUM

TO: FILE (190.514.001)

FROM: JESSICA S. BAUER, P.E.
NYSPE 084915

DATE: MARCH 7, 2014

C&S PROJECT NO.: 190.514.001

RE: SEISMIC ASSESSMENT SUMMARY
NEW YORK STATE DEPARTMENT OF TRANSPORTATION
D031085; PIN 3501.60; I-81

BIN: 1069152 Seismic Assessment

This memorandum summarizes the seismic assessment conducted for BIN 1069152 as part of the Interstate 81 Project in Syracuse, NY. The purpose of the assessment is to determine if seismic retrofits are warranted at the superstructure to substructure connection, and if further seismic evaluation of the structure is required. This memorandum will give the assessment results, retrofits required and recommendations for further seismic evaluation of the structure.

ASSESSMENT PROCEDURE

The seismic assessment was performed in accordance with the FHWA Seismic Retrofitting Manual for Highway Structures: Part 1 - Bridges, January 2006. As per the referenced manual, seismic assessment was performed for both lower level and upper level earthquake ground motion. The lower level earthquake ground motion has a reasonable likelihood of occurrence within the life of the bridge (50% probability of exceedance within a 75 year bridge life). The upper level earthquake ground motion has a finite likelihood of occurrence within the life of the bridge (7% probability of exceedance within a 75 year bridge life).

Values for the spectral acceleration for the Syracuse area used in the assessment are as follows:

- Lower Level Earthquake Ground Motion for a Short Period (0.2 seconds): $S_S = 0.0251$
- Lower Level Earthquake Ground Motion for a Long Period (1.0 seconds): $S_1 = 0.0076$
- Upper Level Earthquake Ground Motion for a Short Period (0.2 seconds): $S_S = 0.139$
- Upper Level Earthquake Ground Motion for a Long Period (1.0 seconds): $S_1 = 0.047$

These values are considered constant and are the same for all seismic assessments of bridges in the Syracuse area.

The Site Class is based on the soil conditions at the bridge location. It was determined that this parameter has little effect on the results of the seismic assessment because the spectral

acceleration values for the Syracuse area are small. Based on this, a site class of D was used for all seismic assessments of bridges in the Syracuse area.

Bridge parameters used in the seismic assessment were retrieved from the record drawings and WinBolts data.

The seismic assessment takes into account the anticipated service life, importance, and the seismic exposure of the bridge to determine a seismic retrofit category (SRC). The SRC is then used to determine seismic evaluation methods and retrofit measures. There are four SRCs, A through D. Seismic retrofit category A is the lowest category; bridges in this category do not require retrofits or further seismic evaluation. Seismic retrofit category D is the highest category; bridges in this category requiring the most rigorous seismic evaluations and retrofits.

ASSESSMENT RESULTS

The SRC for the bridge is "**C**" for lower level earthquake ground motion and "**B**" for upper level earthquake ground motion.

RETROFITS REQUIRED

Bearing replacements and seat width improvements are not required at the abutments or pier. Additional retrofits may be required if further seismic evaluation is needed.

RECOMMENDATIONS FOR FURTHER SEISMIC EVALUATION

For the lower level earthquake ground motion, it is recommended that capacity/demand ratios for bridge components are calculated as per Section 5.4 of the referenced manual. For the upper level earthquake ground motion, it is recommended that the capacities of the bearings are checked as per Section 5.2 of the referenced manual.

Retrofit cost estimates will be provided after any further required seismic evaluations are completed.

ENGINEERS
DESIGN BUILD
TECHNICAL RESOURCES
OPERATIONS

C&S Engineers, Inc.
Syracuse Hancock International Airport
Syracuse, NY 13212
phone 315-455-2000
fax 315-455-9667
www.cscos.com

TECHNICAL MEMORANDUM

TO: **FILE (190.514.001)**

FROM: **PAUL BYRNE, P.E.**
NYSPE

DATE: **JUNE 10, 2014**

C&S PROJECT NO.: 190.514.001

RE: **NEW YORK STATE DEPARTMENT OF TRANSPORTATION**
D031085; PIN 3501.60; I-81 Opportunities, BIN 1069152 Fatigue Evaluation

---

This memorandum documents a fatigue evaluation conducted for the existing Interstate 81 Viaduct Project. Existing structures with AASHTO Category D, E, and E' fatigue-prone details require 100% hands-on inspection unless proven to be exempt. The purpose of the evaluation is to assess the remaining life of fatigue-prone components.

EVALUATION PROCEDURES

The fatigue evaluation was performed in accordance with the AASHTO Guide Specification for Fatigue Evaluations of Existing Steel Bridges, 1990. Fatigue-prone welds identified in the biennial inspection reports were located on record drawings and confirmed visually in the field. Additional information concerning fatigue-prone welds located in BIN folders was also obtained and reviewed prior to inspection.

EVALUATION RESULTS

The results of the fatigue evaluation of the existing bridge are shown below. The remaining safe fatigue life of the fatigue components have **not been exhausted**.

Fatigue Detail Location	Remaining Safe Fatigue Life (Years)	Remaining Mean Fatigue Life (Years)
Span 1, Interior Girders, Gusset Plate at Bottom Flange	58.70	367.29
Span 1, Interior Girders, Gusset Plate at Top Flange	964.18	4822.89
Span 1, Exterior Girders, Gusset Plate at Bottom Flange	49.41	321.55
Span 1, Exterior Girders, Gusset Plate at Top Flange	949.00	4748.19

E. Recommendations:

The purpose of this deck evaluation is to document and determine existing conditions of the deck. It will be used as a tool for developing the scope of work and cost estimates for the development and comparison of alternatives for the overall project.

The total damaged area is approximately 4% of the total deck area. Due to the age, condition and high chloride-ion content of the bridge deck concrete, the bridge deck should be rehabilitated or replaced to meet current standards and to mitigate excessive future maintenance costs.

Option 1 – Scarify and Bridge Deck Overlay
The maximum service life this option would provide is 25 years. The design life of this project is 30 years (ETC+30). This option does not meet the project objective of obtaining 30+ years of service life.

Option 2 – Bridge Deck Rehabilitation with 100% Deep Removal
This option will involve partial depth reconstruction with top mat rebar exposure of the entire bridge deck to remove the chloride contaminated concrete (100% deep removal). The existing bridge deck thickness is 9 ¼" with 3 ¼" of concrete cover over the top mat of reinforcing. The proposed partial depth reconstruction will include the additional ¼" of concrete to provide the standard 9 ½" bridge deck thickness. The existing top mat of reinforcing bars will be removed and replaced to accommodate the standard 3" of concrete cover. The existing 2-rail bridge railing will be removed and replaced with new single-slope concrete bridge barrier. The existing approach slabs will receive the same treatment as the deck. The existing bridge joints will be replaced with new armorless bridge joints and seals. The Level 1 Load Rating for the final condition was found to be

acceptable. This option would provide a service life of 35 years to the bridge deck. The construction cost of this option is $ 1.09 million.

Option 3 – Bridge Deck Replacement with Cast-In-Place Concrete
This option would involve the complete demolition of the existing bridge deck, 2-rail bridge rail, and bridge deck joints. The bridge deck will be replaced with a new concrete deck, single-slope barrier and new armorless bridge joints. The approach slabs would also be replaced under this option. The new bridge deck would be 9 ½" standard thickness as compared to the 9 ¼" existing thickness. The Level 1 Load Rating was found to be acceptable. This option would provide a service life of 40 years to the bridge deck. The construction cost of this option is $ 1.26 million.

Option 4 – Bridge Deck Replacement with Pre-cast Concrete Deck Panels
This option will have the highest construction cost of all the options, however; traffic control costs may be lower due to reduced construction time. Comparison of accelerated construction to conventional construction is beyond the scope of work for this project at this time.

IN-DEPTH INSPECTION REPORT

D031085 P.I.N. 3501.60

B.I.N. 1069160

TEAM LEADER	Bruce Opalka, P.E.	60413
		NYSPE LICENSE #

ASSISTANT TEAM LEADER	Charles Brooks, P.E.
ASSISTANT TEAM LEADER	Mike Rode
ASSISTANT TEAM LEADER	Dustin Trivisonno

FEATURE CARRIED	ENT. To I481 WB
FEATURE CROSSED	BUTTERNUT CREEK

DATE FIELD WORK BEGAN	January 15,2014
DATE FIELD WORK COMPLETED	January 15, 2014

TABLE OF CONTENTS

- TP 349 & 350
- IN-DEPTH CONDITION DOCUMENTATION
- IN-DEPTH PHOTO DOCUMENTATION
- ASBESTOS REPORT

TP 349 & TP 350

BRIDGE ELEMENT RATINGS

Inspection Date: 6/14/2012 RC: 33 BIN: 1069160

Bridge Ratings

Carried: ENT. TO I481 WB Crossed: BUTTERNUT CREEK CheckValue: 1,779,217,001

Inspection Agency: 10 - NYSDOT Type of Inspection: 1 - BIENNIAL
GTMS: 119 -- Concrete - Culvert
POSTINGS: See Gen Rec Page 1 for Postings at time of inspection.
Further Investigation Needed: No
State Highway Number: 000000 Milepoint: 0 AADT/Yr: 2510 / 1997
Orientation: 1 - North Political Unit: 0233 - Town of DEWITT Year Built: 1980
Total Spans: 2 Ramp Bridge Attached To Span: NA BIN: NA
General Recommendation: 6 Computed Condition Rating: 5.659

Abutment Ratings:	Beg Abut	End Abut
Joint with Deck	8	8
Bearings, Bolts, Pads	8	8
Seats and Pedestals	6	6
Backwall	8	8
Stem (Breastwall)	6	6
Erosion or Scour	6	5
Footings	6	6
Piles	8	8
Recommendation	6	6

Wingwall Ratings:	Beg Abut	End Abut
Walls	6	6
Footings	9	9
Erosion or Scour	6	6
Piles	8	8

Channel Ratings:	Channel
Stream Alignment	5
Erosion and Scour	5
Waterway Opening	5
Bank Protection	6

Approach Ratings:	Approaches
Drainage	6
Embankment	6
Settlement	6
Erosion	5
Pavement	5
Guide Railing	5

Number of Flags Issued:

RED: 0 Yellow: 0 Safety: 0

Vulnerability Reviews Recommended: 1=Yes, 2=No, 3=NA, X=NotActive

Hydraulic: 2	Overload: X	Steel: 2
Collision: 3	Concrete: X	Seismic: X

Inspector's Signature: CheckValue: 1,779,217,001 Date: 6/14/2012

Bruce Opalka,PE () (Inspector ID:3000038)

Signed copy of this inspection report is available in the appropriate NYSDOT Regional Office

Reviewed By: Date: 8/6/2012

James R. Manning,PE () (QC ID:3000023)

Signed copy of this inspection report is available in the appropriate NYSDOT Regional Office

Inspection Date: 6/14/2012 RC: 33 BIN: 1069160

Span Ratings

Carried: ENT. TO I481 WB **Crossed: BUTTERNUT CREEK** **CheckValue: 1,779,217,001**

Deck Element Ratings:	001	002
Wearing Surface	5	5
Curbs	8	8
Sidewalks, Fascias	8	8
Railings, Parapets	6	6
Scuppers	8	8
Gratings	8	8
Median	8	8
Mono Deck Surface	8	8

Superstructure Ratings:	001	002
Structural Deck	8	8
Primary Members	5	5
Secondary Members	8	8
Paint	8	8
Joints	8	8
Recommendation	5	5

Pier Ratings:	001	002
Bearings, Bolts, Pads	8	8
Pedestals	8	8
Top of Cap or Beam	6	8
Stem Solid Pier	6	8
Cap Beam	8	8
Pier Columns	8	8
Footings	6	8
Erosion or Scour	6	8
Piles	8	8
Recommendation	6	8

Utility Ratings:	001	002
Lighting	8	8
Sign Structure	8	8
Utilities and Support	8	8

Field Notes:

Field Date	Arrival	Departure	Temp (C)	Temp (F)	Weather Conditions
6/14/2012	1:00:00 PM	3:00:00 PM	24	75	sunny

IN-DEPTH CONDITION DOCUMENTATION

IN DEPTH INSPECTION REPORT

BIN 1069160

- **In-Depth Condition:**

Visual Inspection:

Cracks, spalls, and other field observations are shown on the plans. Below is a ` brief summary of conditions for each feature.

Superstructure

- **Deck –** There is no Bridge Deck to evaluate. Structure is a two cell curved concrete box culvert.
- **Steel –** There is no Structural Steel to inspect. Structure is a two cell curved concrete box culvert.
- **Bearings –** There are no bearings for this structure. Structure is a two cell curved concrete box culvert.

Substructure

- Structure is a two cell curved concrete box culvert with nine individual pours from left to the right. The bridge is orientated North. The inlet is on the left and outlet on the right.

- **CELL #1 –** Pours 1& 2 have two thin full height cracks with associated hollowness on the pier face. Pour 3 in good condition. Pours 4 &5 have 2/3 hairline cracks across the top slab with minor efflorescence seepage through the cracks. Some cracks extend down through both walls. Pours 6 & 7 in good condition with minor seepage through ceiling joint between the two pours. Pour 8 has three thin full height cracks on the pier wall and pour 9 has a single full height crack in the beginning wall.

- **Cell #2 –** Pours 1 & 2 in good condition. Pour 3 has thin crack across top slab and extends to midheight down the end wall with efflorescence seepage. Pour 4 has two similar cracks as in pour 3. Pour 5 has a thin vertical crack in pier wall. Pours 6-8 in good condition. Pour 9 has single hairline vertical crack for 3' from the bottom near end of abutment wall.

- **Fascias/Wing Walls –** Begin wing wall right has cracking, spalling, and delamination for nearly full height in beginning abutment wall and construction joint with wingwall for 3" wide.

1069160 481 / BUTTERNUT

FIELD NOTES

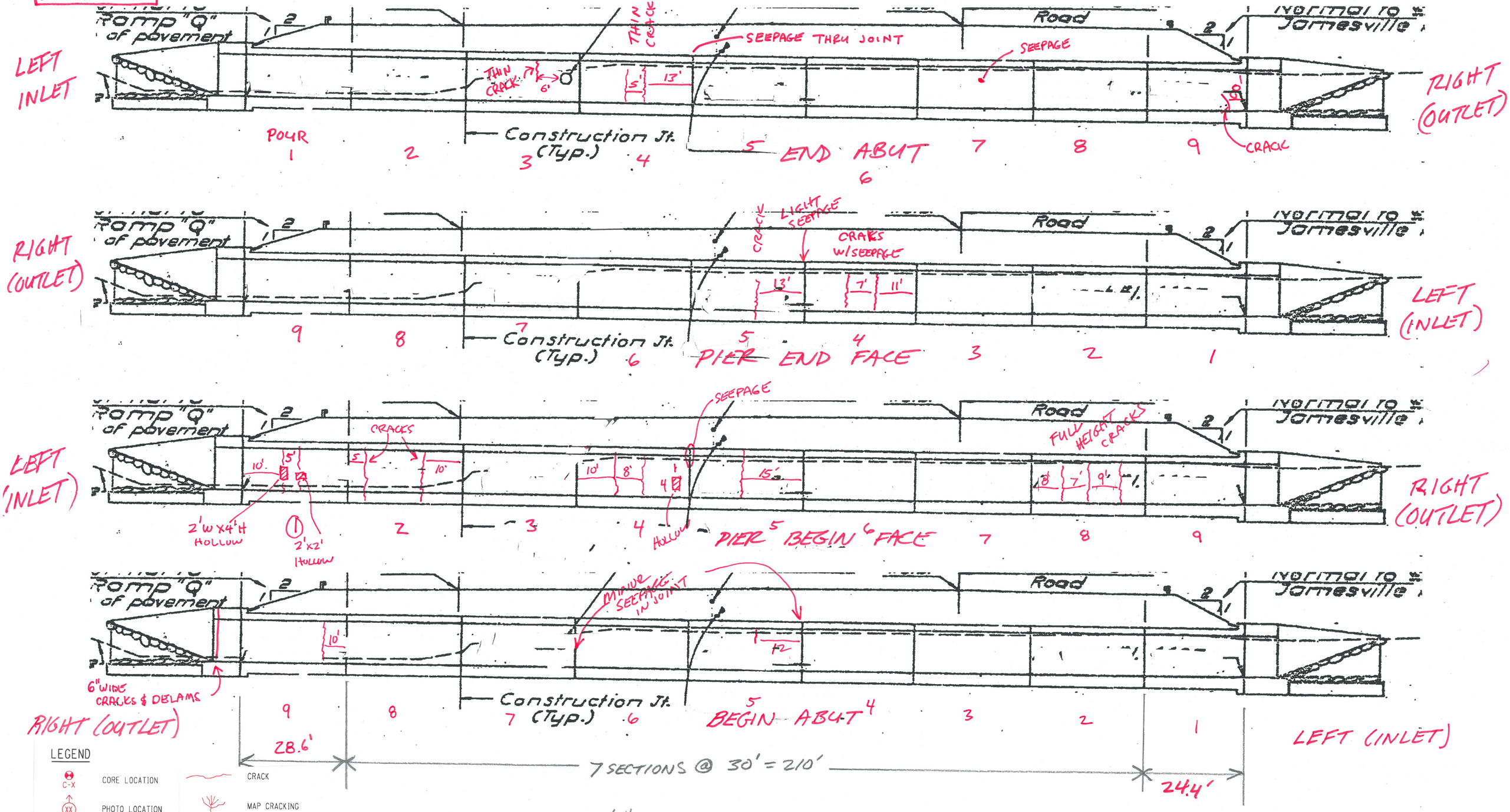

LEGEND

- C-X — CORE LOCATION
- XX — PHOTO LOCATION
- DELAMINATION
- SPALLING
- CRACK
- MAP CRACKING
- MOISTURE

CRACKS ARE TYPICALLY < 1/16"

DELAMINATIONS ARE TYPICALLY THIN SURFACE DELAMS

1069160 ENT TO 481 WB OVER BUTTERNUT CRK

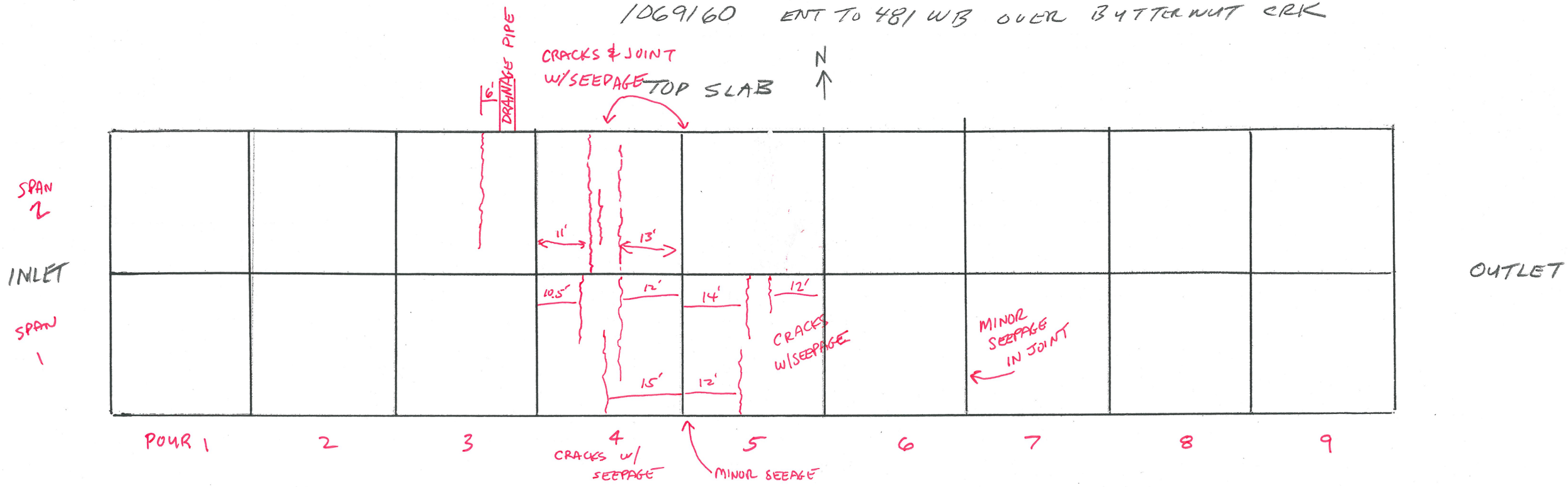

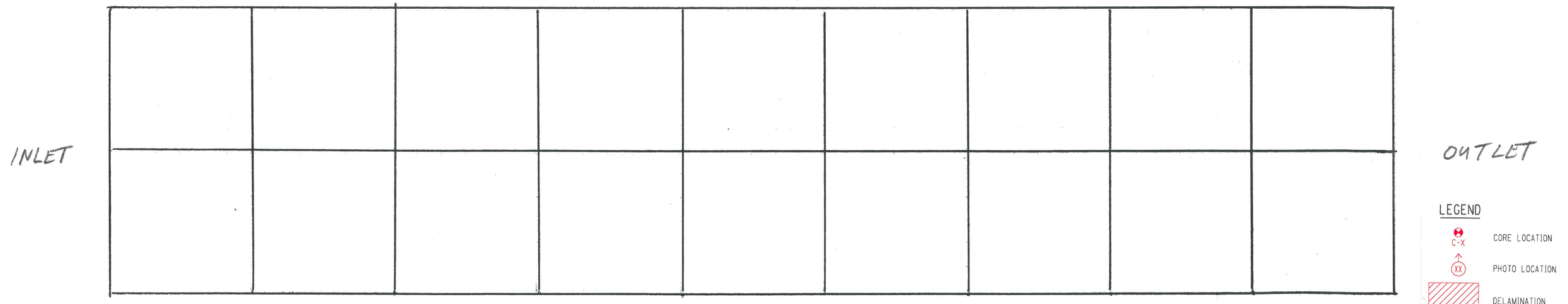

NOTE: FLOWING WATER & SEDIMENT DID NOT PERMIT FOR THE INSPECTION OF BOTTOM SLAB.

BOTTOM SLAB N

IN-DEPTH PHOTO DOCUMENTATION

PHOTO LOCATION PLAN

1069160 481 / BUTTERNUT

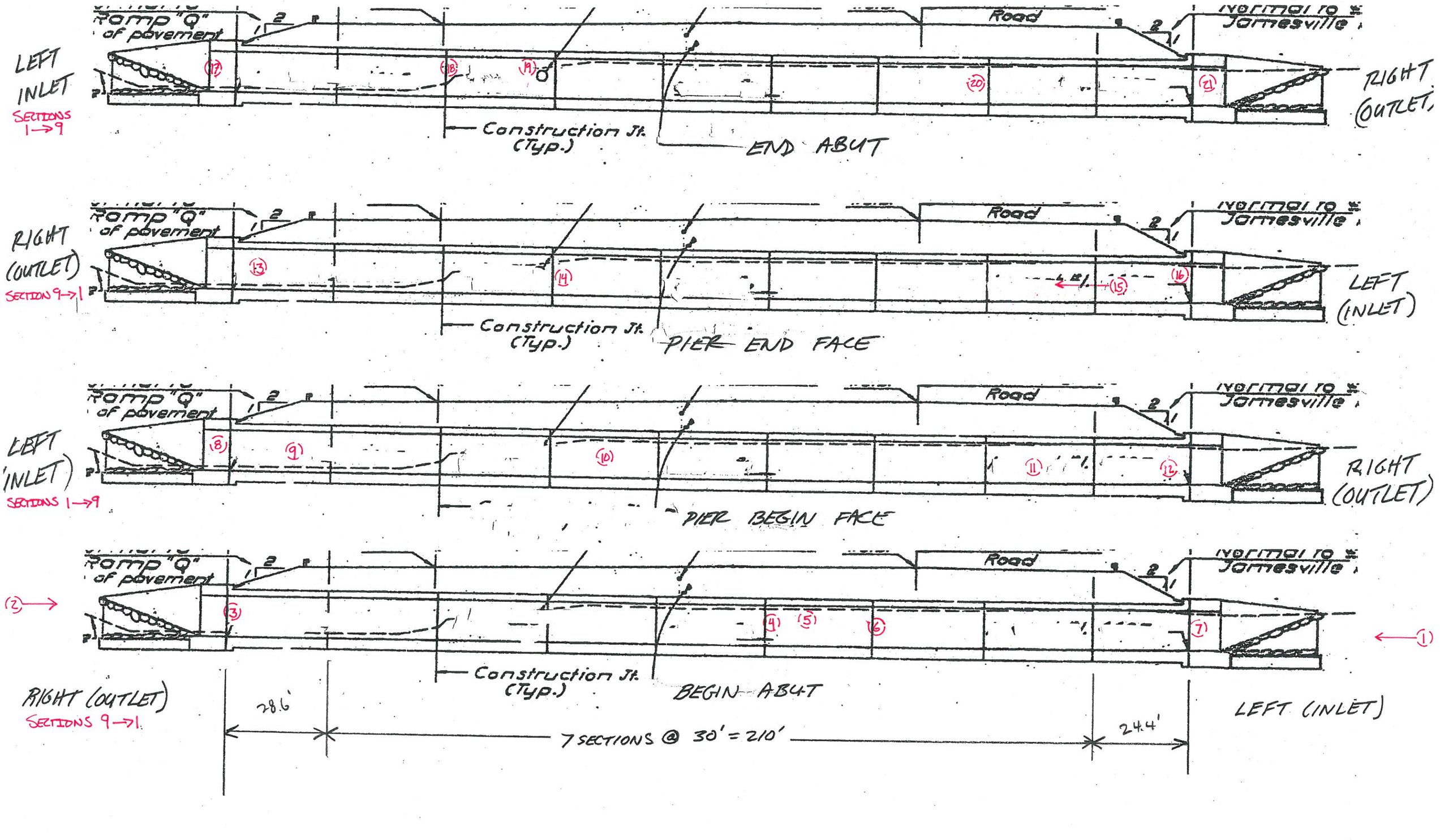

Ramp To I481 WB over Butternut Creek– BIN 1069160



DESCRIPTION: ELEVATION LEFT

PHOTO 1



DESCRIPTION: ELEVATION RIGHT

PHOTO 2



DESCRIPTION: BEGIN ABUTMENT & WING WALL RIGHT – CRACKING AND DELAMINATION AT JOINT.

PHOTO 3



DESCRIPTION: BEGIN ABUTMENT -SEEPAGE AT CONSTRUCTION JOINT 4&5.

PHOTO 4



DESCRIPTION: BEGIN ABUTMENT AND TOP SLAB-CRACKING WITH SEEPAGE AT SECTION 4.

PHOTO 5

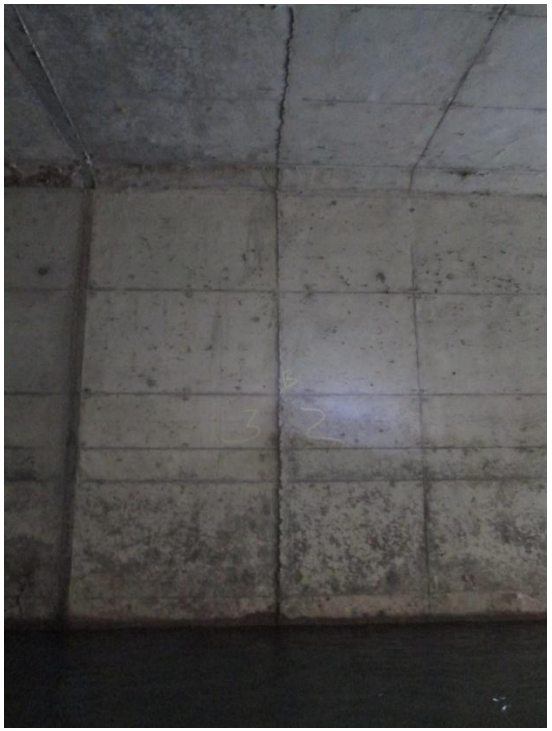

DESCRIPTION: BEGIN ABUTMENT CONSTRUCTION JOINT BETWEEN SECTIONS 2&3-TYPICAL CONDITION OF JOINTS.

PHOTO 6



DESCRIPTION: BEGIN ABUTMENT & WING WALL LEFT.

PHOTO 7



DESCRIPTION: BEGIN PIER LEFT SECTION 1.

PHOTO 8



DESCRIPTION: BEGIN PIER SECTION 1-ISOLATED DELAMINATION AND CRACKING.

PHOTO 9



DESCRIPTION: BEGIN PIER SECTION 4- PIER WALL &UPPER SLAB CRACKING AND SEEPAGE

PHOTO 10



DESCRIPTION: BEGIN PIER SECTION 8-MINOR VERTICAL CRACKING FULL HEIGHT.

PHOTO 11



DESCRIPTION: BEGIN PIER SECTION 9 RIGHT.

PHOTO 12



DESCRIPTION: END PIER SECTION 9 RIGHT.

PHOTO 13



DESCRIPTION: END PIER CONSTRUCTION JOINT BETWEEN SECTIONS 6&7-TYPICAL CONDITION AT JOINTS.

PHOTO 14



DESCRIPTION: END PIER LOOKING LEFT TO RIGHT FROM SECTION 1.

PHOTO 15



DESCRIPTION: END PIER SECTION 1 LEFT.

PHOTO 16



DESCRIPTION: END ABUT MENT AND WING WALL JOINT LEFT-DELAMINATION AND CRACKING AT CONSTRUCTION JOINT.

PHOTO 17



DESCRIPTION: END ABUTMENT CONSTRUCTION JOINT BETWEEN SECTIONS 2&3- TYPICAL CONDITION.

PHOTO 18



DESCRIPTION: END ABUTMENT SECTION 3- CRACKING AND SEEPAGE ADJACENT TO CULVERT INLET LEFT.

PHOTO 19



DESCRIPTION: END ABUTMENT CONSTRUCTION JOINT BETWEEN SECTIONS 7&8- TYPICAL CONDITION.

PHOTO 20



DESCRIPTION: END ABUTMENT AND WING WALL RIGHT.

PHOTO 21

DESCRIPTION:

PHOTO

ASBESTOS DOCUMENTATION

ASBESTOS DOCUMENTATION FROM WATTS ARCHITECTURE & ENGINEERING, INC.

(WILL BE PROVIDED UPON COMPLETION)

NEW YORK STATE
DEPARTMENT OF TRANSPORTATION
D031085 P.I.N 3501.60

LEVEL 1 LOAD RATING
B.I.N. 1069160
ENT. TO I-481 WB OVER BUTTERNUT CREEK

LOAD RATING SUMMARY TABLE (LOAD FACTOR)					
CONTROLLING MEMBER	**CONTROLLING PARAMETER**	**LIVE LOAD**	**LIVE LOAD TYPE**	**INVENTORY RATING**	**OPERATING RATING**
TOP SLAB SECTION A TO C	SHEAR	HS-20	TRUCK	1.57 (56 TONS)	2.62 (94 TONS)
TOP SLAB SECTION D TO F	SHEAR	HS-20	TRUCK	1.57 (56 TONS)	2.62 (94 TONS)
TOP SLAB SECTION G TO I	SHEAR	HS-20	TRUCK	1.57 (56 TONS)	2.62 (94 TONS)

DOES NOT INCLUDE FUTURE WEARING COURSE

ANALYSIS METHOD:LOAD FACTOR

RECOMMENDED POSTING AS-IS CONDITION: _____ Tons __X__ None

CALCULATED BY:

DATE: March 25, 2014

QUALITY ASSURANCE BY:

STATE OF NEW YORK ★ JAMES FITZPATRICK CRAIG ★ 078434 ★ LICENSED PROFESSIONAL ENGINEER

DATE: 4-16-14

C&S COMPANIES®

499 Col. Eileen Collins Blvd.
Syracuse, NY 13212
phone 315-455-2000
fax 315-455-9667
www.cscos.com

IN-DEPTH INSPECTION REPORT

D031085 P.I.N. 3501.60

B.I.N. 1069170

TEAM LEADER	Bruce Opalka, P.E.	60413
		NYSPE LICENSE #

ASSISTANT TEAM LEADER	Charles Brooks, P.E.
ASSISTANT TEAM LEADER	Mike Rode
ASSISTANT TEAM LEADER	Dustin Trivisonno

FEATURE CARRIED	EXT. from I481 EB
FEATURE CROSSED	BUTTERNUT CREEK

DATE FIELD WORK BEGAN	January 15,2014
DATE FIELD WORK COMPLETED	January 15, 2014

TABLE OF CONTENTS

- TP 349 & 350
- IN-DEPTH CONDITION DOCUMENTATION
- IN-DEPTH PHOTO DOCUMENTATION
- ASBESTOS REPORT

TP 349 & TP 350

BRIDGE ELEMENT RATINGS

Inspection Date: 6/14/2012 RC: 33 BIN: 1069170

Bridge Ratings

Carried: EXIT FROM I481 EB Crossed: BUTTERNUT CREEK CheckValue: 1,779,241,324

Inspection Agency: 10 - NYSDOT Type of Inspection: 1 - BIENNIAL
GTMS: 119 -- Concrete - Culvert
POSTINGS: See Gen Rec Page 1 for Postings at time of inspection.
Further Investigation Needed: No
State Highway Number: 000000 Milepoint: 0 AADT/Yr: 2407 / 1997
Orientation: 3 - East Political Unit: 0233 - Town of DEWITT Year Built: 1980
Total Spans: 2 Ramp Bridge Attached To Span: NA BIN: NA
General Recommendation: 6 Computed Condition Rating: 5.907

Abutment Ratings:	Beg Abut	End Abut
Joint with Deck	8	8
Bearings, Bolts, Pads	8	8
Seats and Pedestals	6	6
Backwall	8	8
Stem (Breastwall)	6	6
Erosion or Scour	5	6
Footings	6	9
Piles	8	8
Recommendation	6	6

Wingwall Ratings:	Beg Abut	End Abut
Walls	6	6
Footings	9	9
Erosion or Scour	5	5
Piles	8	8

Channel Ratings:	Channel
Stream Alignment	3
Erosion and Scour	5
Waterway Opening	4
Bank Protection	5

Approach Ratings:	Approaches
Drainage	6
Embankment	6
Settlement	6
Erosion	6
Pavement	6
Guide Railing	4

Number of Flags Issued:

RED: 0 Yellow: 0 Safety: 0

Vulnerability Reviews Recommended: 1=Yes, 2=No, 3=NA, X=NotActive

Hydraulic: 2	Overload: X	Steel: 3
Collision: 3	Concrete: X	Seismic: X

Inspector's Signature: CheckValue: 1,779,241,324 Date: 6/14/2012

Bruce Opalka,PE () (Inspector ID:3000038)

Signed copy of this inspection report is available in the appropriate NYSDOT Regional Office

Reviewed By: Date: 8/6/2012

James R. Manning,PE () (QC ID:3000023)

Signed copy of this inspection report is available in the appropriate NYSDOT Regional Office

Inspection Date: 6/14/2012 RC: 33 BIN: 1069170

Span Ratings

Carried: EXIT FROM I481 EB **Crossed: BUTTERNUT CREEK** **CheckValue: 1,779,241,324**

Deck Element Ratings:	001	002
Wearing Surface	5	5
Curbs	8	8
Sidewalks, Fascias	6	6
Railings, Parapets	6	6
Scuppers	8	8
Gratings	8	8
Median	8	8
Mono Deck Surface	8	8

Superstructure Ratings:	001	002
Structural Deck	8	8
Primary Members	6	6
Secondary Members	8	8
Paint	8	8
Joints	8	8
Recommendation	6	6

Pier Ratings:	001	002
Bearings, Bolts, Pads	8	8
Pedestals	8	8
Top of Cap or Beam	6	8
Stem Solid Pier	6	8
Cap Beam	8	8
Pier Columns	8	8
Footings	6	8
Erosion or Scour	6	8
Piles	8	8
Recommendation	6	8

Utility Ratings:	001	002
Lighting	8	8
Sign Structure	8	8
Utilities and Support	8	8

Field Notes:

Field Date	Arrival	Departure	Temp (C)	Temp (F)	Weather Conditions
6/14/2012	8:00:00 AM	10:00:00 AM	21	70	sunny

IN-DEPTH CONDITION DOCUMENTATION

IN DEPTH INSPECTION REPORT

BIN 1069170

- **In-Depth Condition:**

Visual Inspection:

Cracks, spalls, and other field observations are shown on the plans. Below is a brief summary of conditions for each feature.

Superstructure

- **Deck –** There is no Bridge Deck to evaluate. Structure is a two cell concrete box culvert.
- **Steel –** There is no Structural Steel to inspect. Structure is a two cell concrete box culvert.
- **Bearings –** There are no bearings for this structure. Structure is a two cell concrete box culvert.

Substructure

- Structure is a two cell concrete box culvert. The bridge is orientated East. The inlet is on the right and outlet on the left.

- **Beginning Abutment –** Left half has two full height vertical cracks with no efflorescence seepage. There two small areas, one in each half, of very shallow hollowness.
- **Pier –** Begin and end pier faces with full height tight cracks with no efflorescence seepage through the cracks on all walls. Isolated areas of very shallow hollowness on all walls.
- **End Abutment -** 2 full height tight cracks with no efflorescence seepage through the cracks on left wall. Isolated areas of very shallow hollowness on both walls

1069170 481 OFF RAMP
BUTTERNUT CRK
ORIGINTATED EAST

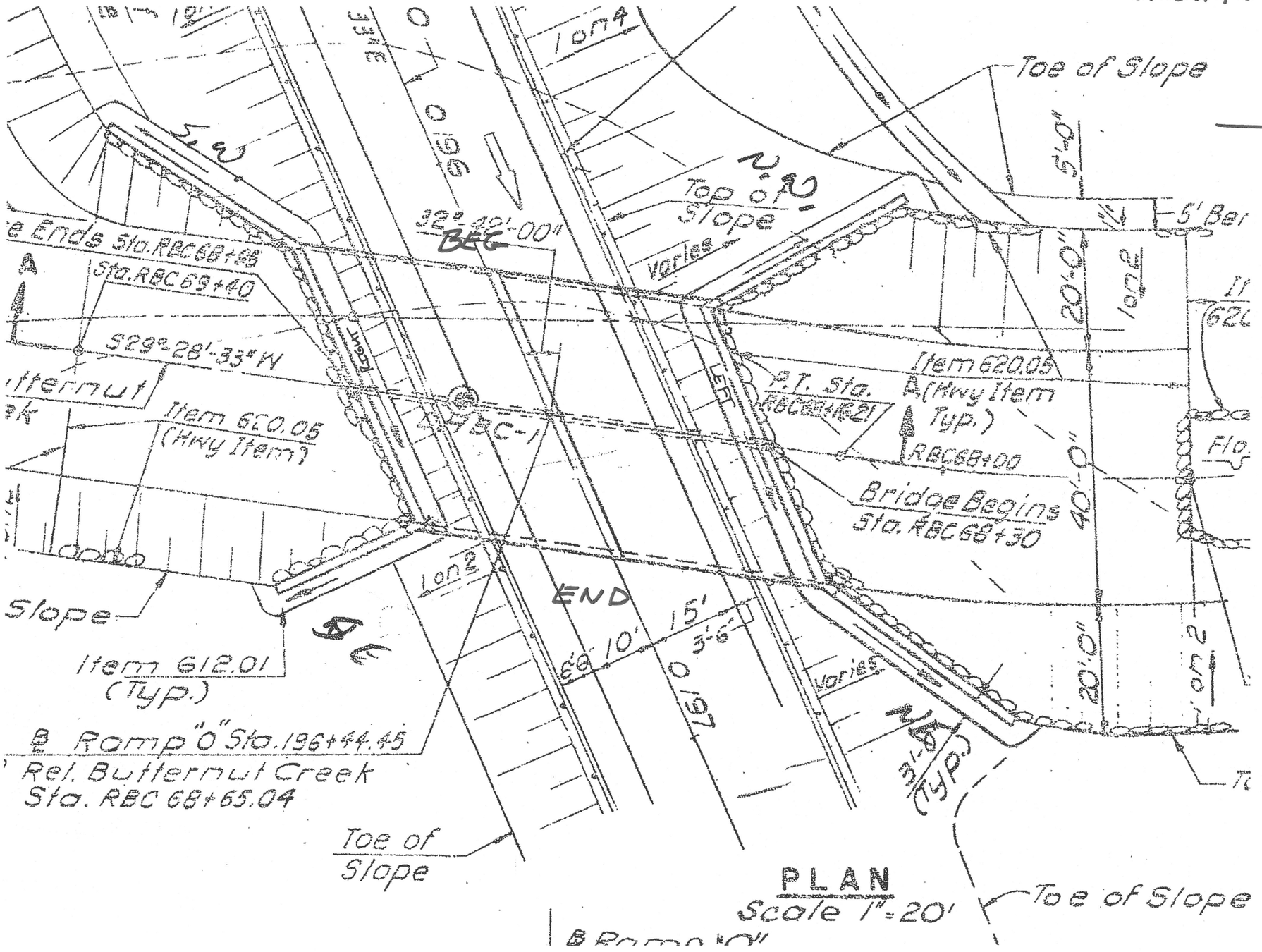

1069170 481 OFF RAMP

BUTTERNUT CRK

ORIENTATED EAST

GENERAL NOTES:

CONCRETE APPEARS TO BE IN GOOD CONDITION WITH ISOLATED AREAS OF SPALLING.

AREAS OF DELAMINATION SOUNDED TO BE SHALLOW.

RIGHT INLET

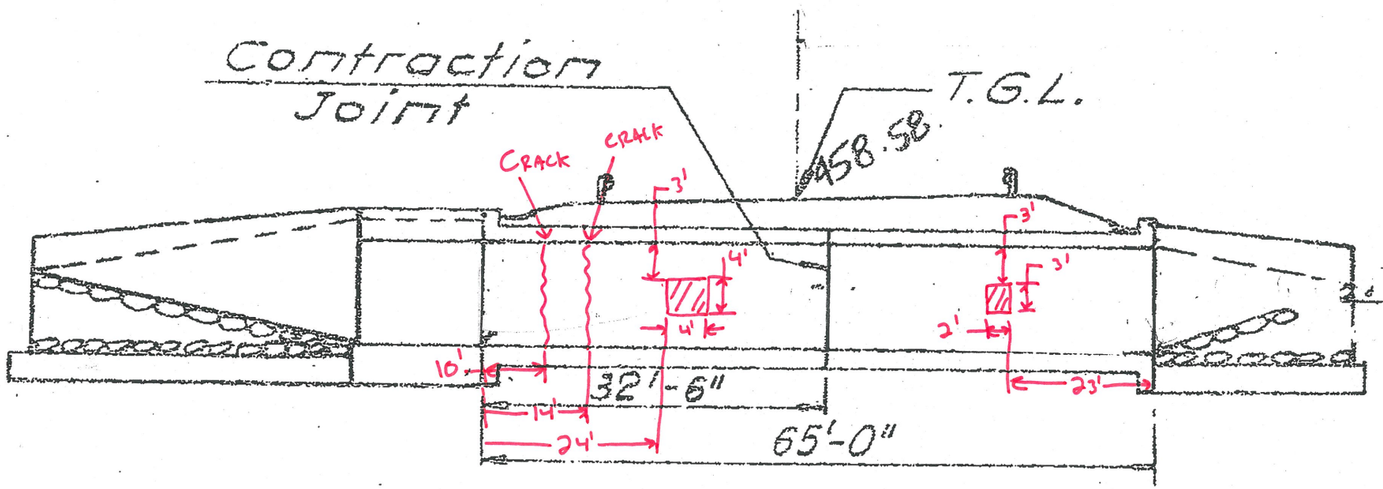

LEFT OUTLET

Datum Elev. 420.0 BEGINNING STEM

LEGEND

- C-X — CORE LOCATION
- XX — PHOTO LOCATION
- DELAMINATION
- SPALLING
- CRACK
- MAP CRACKING
- MOISTURE

LEFT OUTLET

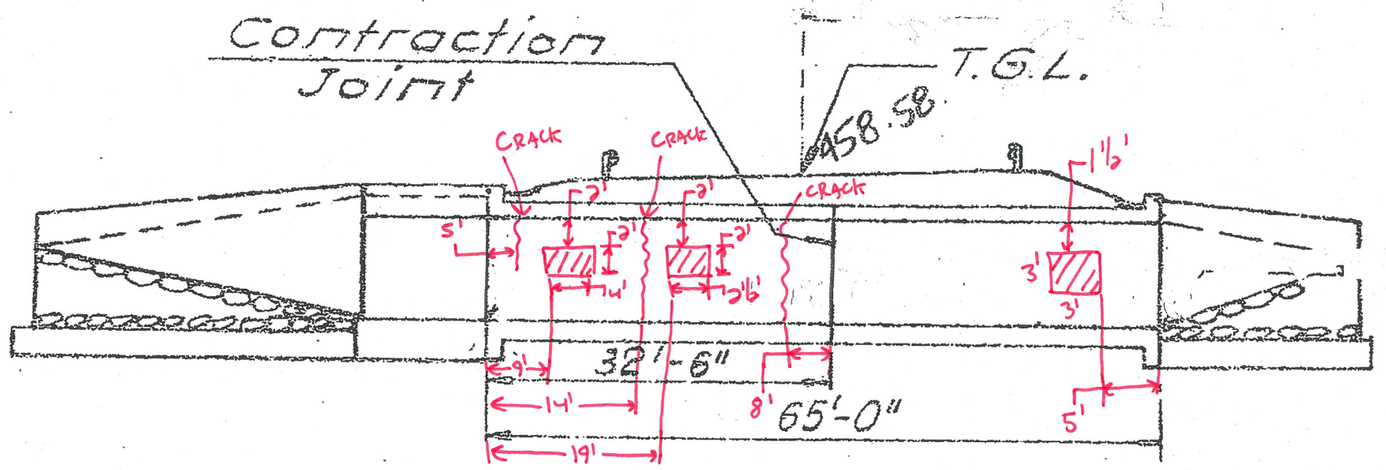

RIGHT INLET

Datum Elev. 420.0 END STEM

1069170 481 OFF RAMP

BUTTERNUT CRK

PRIGNTED EAST

GENERAL NOTES:

CONCRETE APPEARS TO BE IN GOOD CONDITION WITH ISOLATED AREAS OF SPALLING.

AREAS OF DELAMINATION SOUNDED TO BE SHALLOW.

LEFT OUTLET

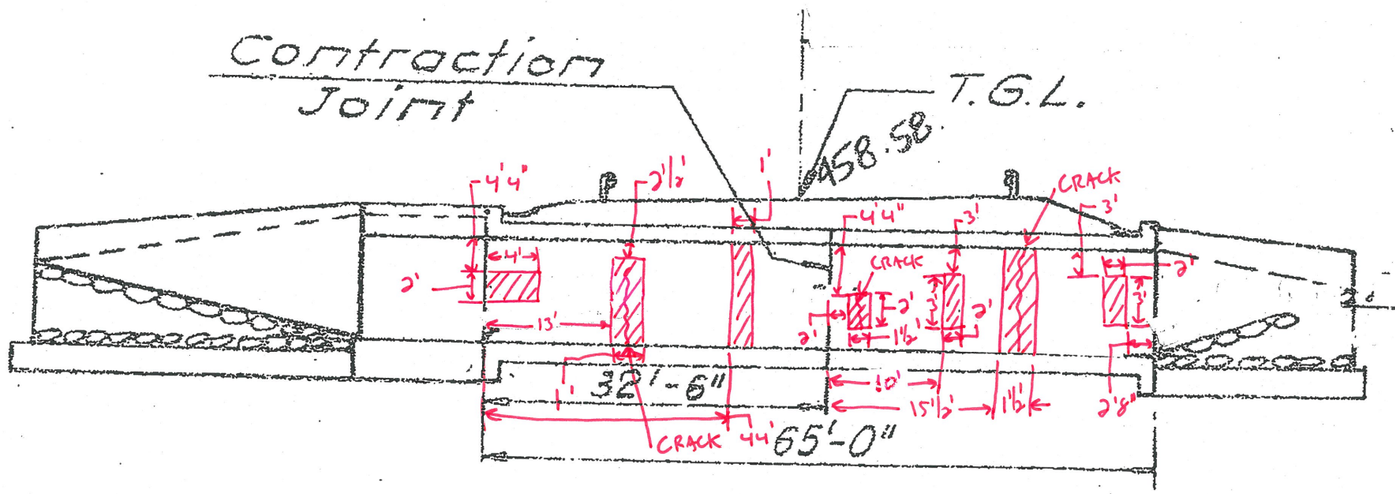

RIGHT INLET

Datum Elev. 420.0 PIER BEGINNING FACE

LEGEND

- C-X — CORE LOCATION
- XX — PHOTO LOCATION
- DELAMINATION
- SPALLING
- CRACK
- MAP CRACKING
- MOISTURE

RIGHT INLET

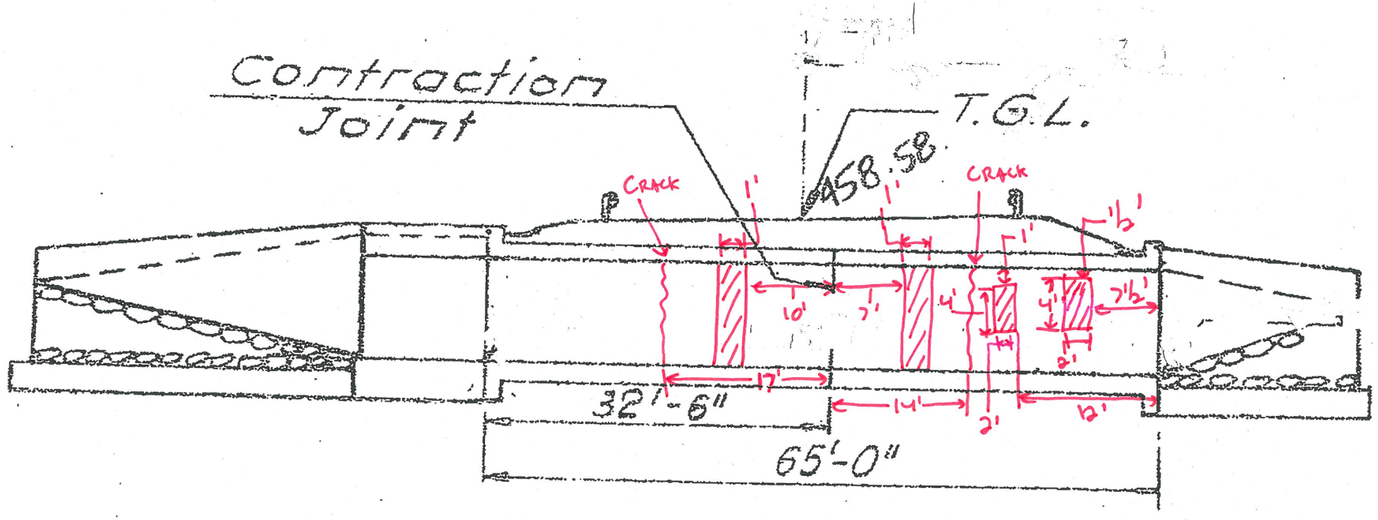

Datum Elev. 420.0 PIER END FACE

LEFT OUTLET

IN-DEPTH PHOTO DOCUMENTATION

PHOTO LOCATION PLANS

1069170 481 OFF RAMP
BUTTERNUT CRK
ORIGINATED EAST

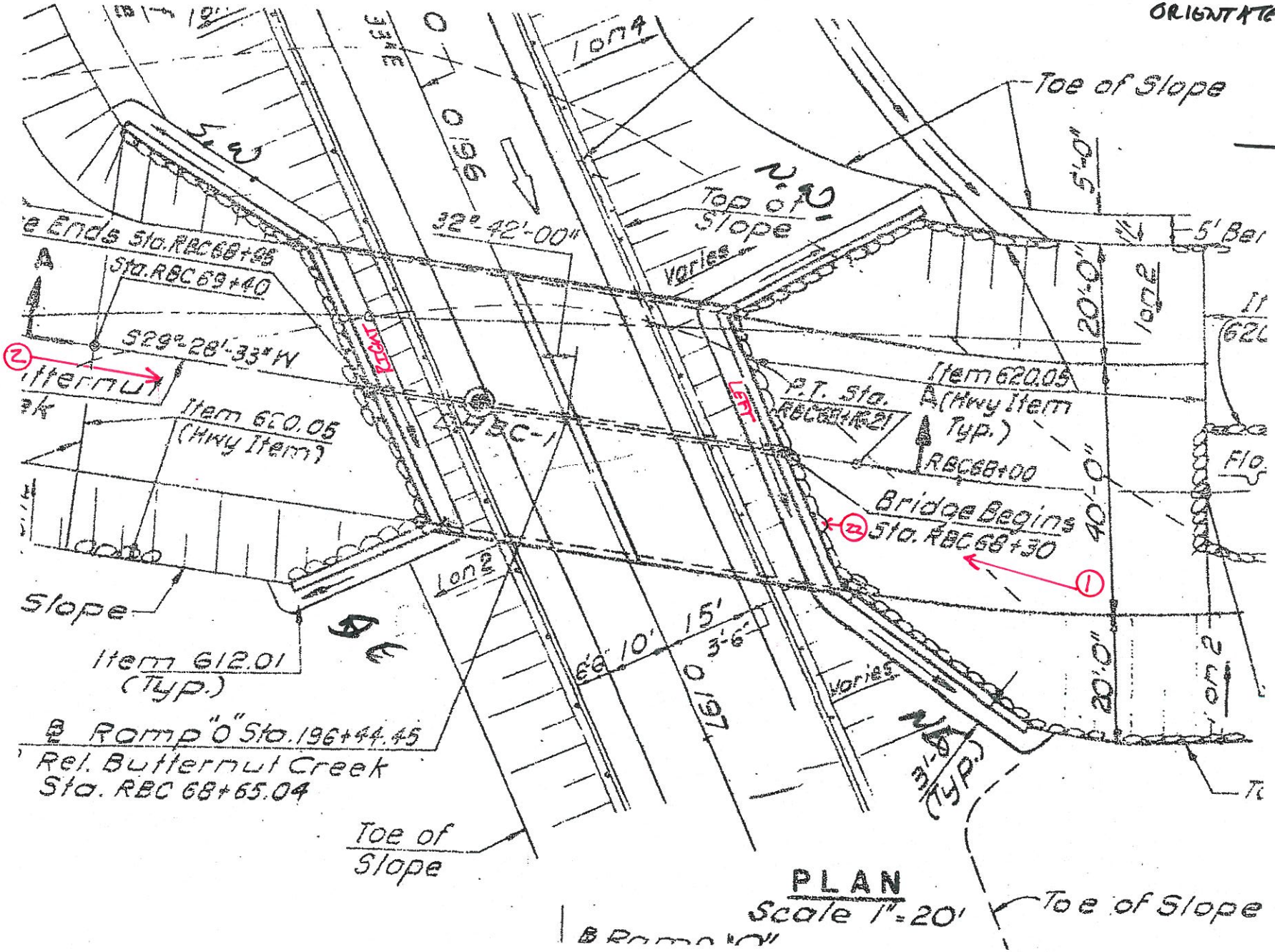

(1)

1069170 481 OFF RAMP
BUTTERNUT CRK
ORIENTATED EAST

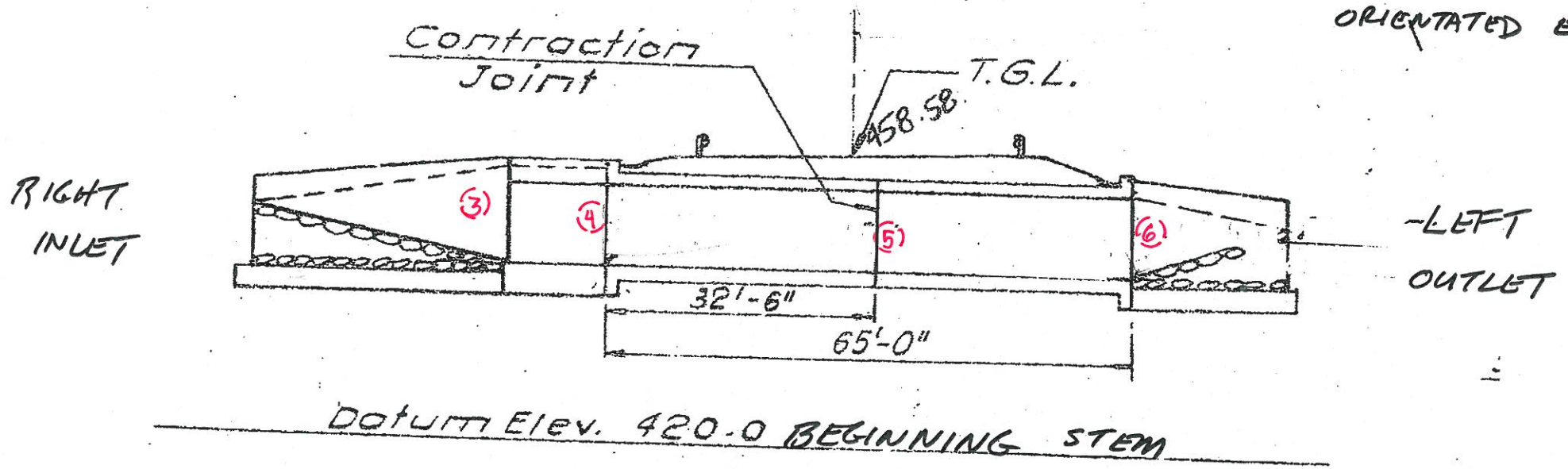

Datum Elev. 420.0 BEGINNING STEM

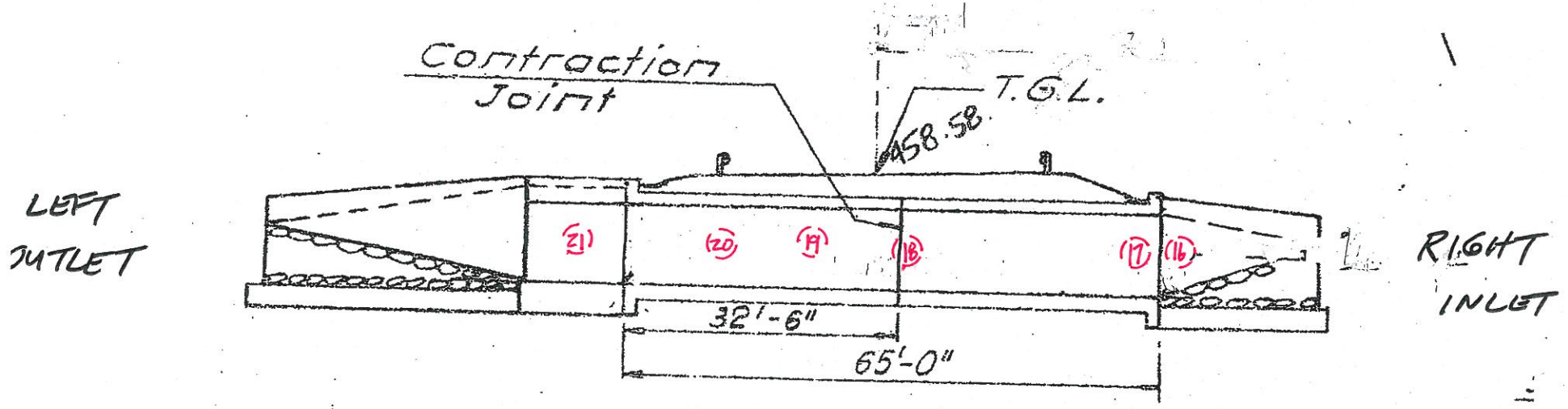

Datum Elev. 420.0 END STEM

1069170 481 OFF RAMP

BUTTERNUT CRK

ORIENTED EAST

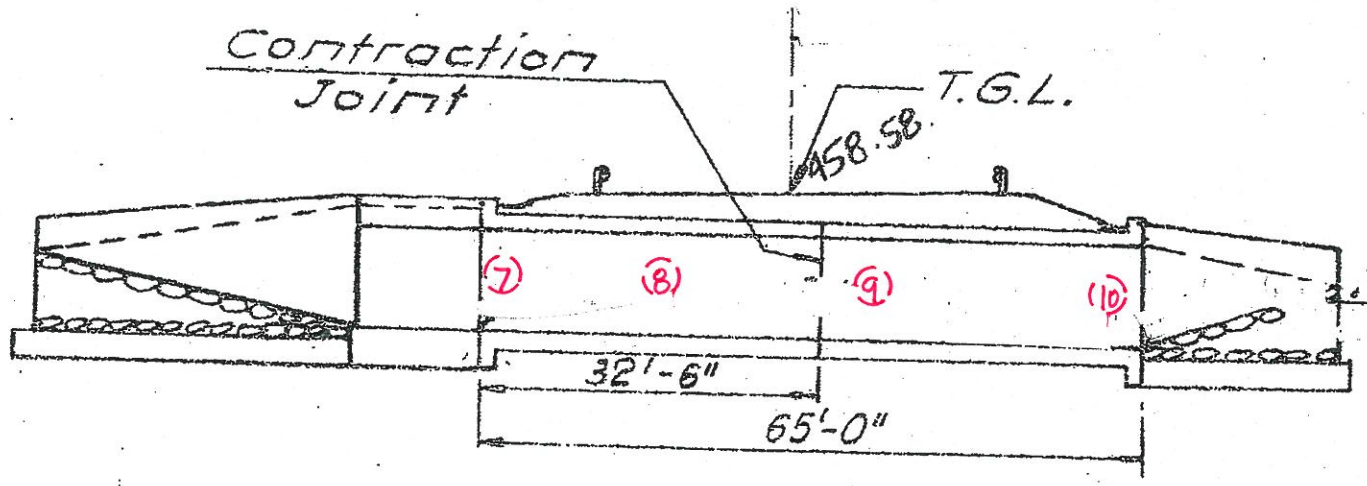

Datum Elev. 420.0 PIER BEGINNING FACE

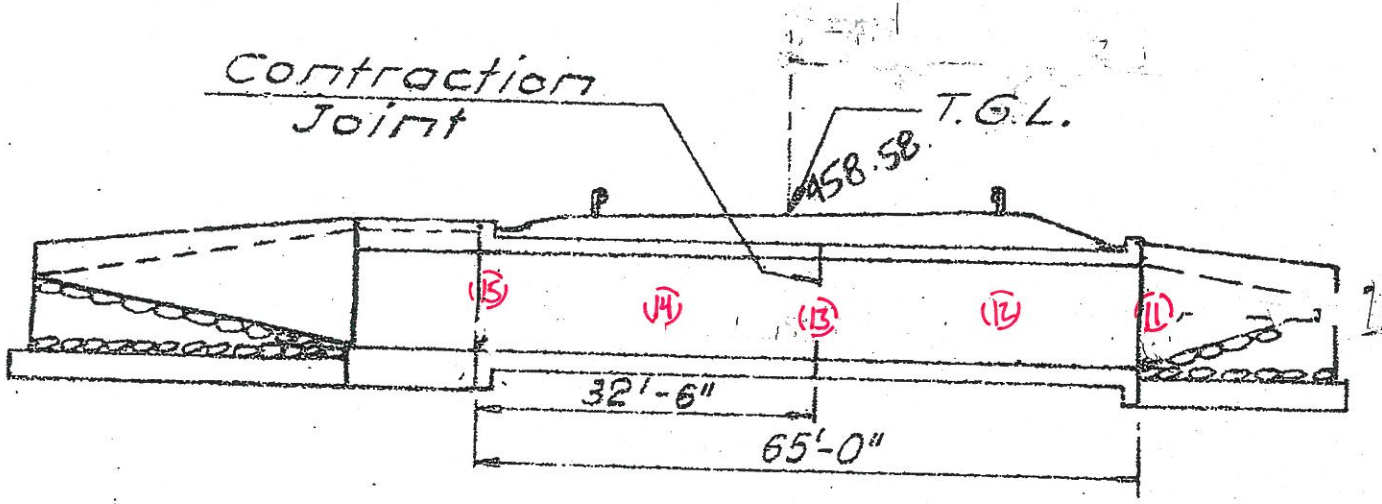

Datum Elev. 420.0 PIER END FACE

Exit from I481 EB over Butternut Creek– BIN 1069170



DESCRIPTION: ELEVATION LEFT

PHOTO 1



DESCRIPTION: ELEVATION RIGHT

PHOTO 2



DESCRIPTION: BEGIN STEM WING WALL LEFT.

PHOTO 3



DESCRIPTION: BEGIN STEM LEFT.

PHOTO 4



DESCRIPTION: BEGIN STEM CONSTRUCTION JOINT BETWEEN SECTION 1&2-ISOLATED DELAMINATION AND CRACKING SECTION 1.

PHOTO 5



DESCRIPTION: BEGIN STEM AND WING WALL RIGHT.

PHOTO 6



DESCRIPTION: BEGIN PIER LEFT-SECTION 1 – ISOLATED DELAMINATION.

PHOTO 7



DESCRIPTION: BEGIN PIER LEFT - SECTION 1- ISOLATED CRACKING AND DELAMINATION.

PHOTO 8



DESCRIPTION: BEGIN PIER CONSTRUCTION JOINT BETWEEN SECTIONS 1&2-ISOLATED DELAMINATION AND CRACKING SECTION 2 RIGHT.

PHOTO 9



DESCRIPTION: BEGIN PIER SECTION 2 RIGHT-ISOLATED DELAMINATION.

PHOTO 10



DESCRIPTION: END PIER LEFT SECTION 1.

PHOTO 11



DESCRIPTION: END PIER SECTION 1-ISOLATED CRACKING AND DELAMINATION-TYPICAL OF SECTION.

PHOTO 12



DESCRIPTION: END PIER CONSTRUCTION JOINT SECTIONS 1&2..

PHOTO 13



DESCRIPTION: END PIER SECTION 2 RIGHT – TYPICAL MINOR CRACKING.

PHOTO 14



DESCRIPTION: END PIER SECTION 2 AND RIGHT FASCIA.

PHOTO 15



DESCRIPTION: END STEM AND WING WALL RIGHT.

PHOTO 16



DESCRIPTION: END STEM SECTION 1 LOOKING RIGHT TO LEFT-ISOLATED CRACKING AND DELAMINATION.

PHOTO 17



DESCRIPTION: END STEM CONSTRUCTION JOINT SECTIONS 1&2.

PHOTO 18



DESCRIPTION: END PIER SECTION 1 LOOKING RIGHT TO LEFT-ISOLATED CRACKING AND DELAMINATION.

PHOTO 19



DESCRIPTION: END PIER SECTION 1 LOOKING RIGHT TO LEFT-ISOLATED CRACKING AND DELAMINATION.

PHOTO 20

Exit from I481 EB over Butternut Creek– BIN 1069170



DESCRIPTION: END PIER AND WING WALL LEFT.

PHOTO 21



DESCRIPTION: LEFT FASICA AND END TOP SLAB- TYPICAL ALL LOCATIONS.

PHOTO 22

ASBESTOS DOCUMENTATION

ASBESTOS DOCUMENTATION FROM WATTS ARCHITECTURE & ENGINEERING, INC.

(WILL BE PROVIDED UPON COMPLETION)

NEW YORK STATE
DEPARTMENT OF TRANSPORTATION
D031085 P.I.N 3501.60

LEVEL 1 LOAD RATING
B.I.N. 1069170
ENT. TO I-481 EB OVER BUTTERNUT CREEK

LOAD RATING SUMMARY TABLE (LOAD FACTOR)					
CONTROLLING MEMBER	**CONTROLLING PARAMETER**	**LIVE LOAD**	**LIVE LOAD TYPE**	**INVENTORY RATING**	**OPERATING RATING**
TOP SLAB	SHEAR	HS-20	TRUCK	0.71 (25 TONS)	1.19 (42 TONS)
TOP SLAB	SHEAR	H-20 **	TRUCK	0.81 (16.2 TONS)	1.36 (27.2 TONS)

**NOTE – AN H-20 LFD ANALYSIS WAS PERFORMED TO CONFIRM POSTING REQUIREMENTS AS OUTLINED IN EI 05-34

DOES NOT INCLUDE FUTURE WEARING COURSE

ANALYSIS METHOD:LOAD FACTOR

RECOMMENDED POSTING AS-IS CONDITION: _____ Tons __X__ None

CALCULATED BY:

DATE: April 3, 2014

QUALITY ASSURANCE BY:

STATE OF NEW YORK ★ JAMES FITZPATRICK CRAIG ★ 078434 ★ LICENSED PROFESSIONAL ENGINEER

DATE: 4-16-14

C&S COMPANIES®

499 Col. Eileen Collins Blvd.
Syracuse, NY 13212
phone 315-455-2000
fax 315-455-9667
www.cscos.com

IN-DEPTH INSPECTION REPORT

D031085 P.I.N. 3501.60

ELEMENT SPECIFIC BRIDGE WORK

B.I.N. 1031529

TEAM LEADER Andrew P. Thompson 84914
NYSPE LICENSE #

ASSISTANT TEAM LEADER Mike Savino

FEATURE CARRIED I-81

FEATURE CROSSED E. Calthrop Avenue

DATE FIELD WORK BEGAN 3/31/14

DATE FIELD WORK COMPLETED 4/1/14

TABLE OF CONTENTS

- STRUCTURE IDENTIFICATION
- INTRODUCTION
- PROJECT LOCATION MAP
- IN-DEPTH CONDITION DOCUMENTATION
- PLANS & SKETCHES
- IN-DEPTH PHOTO DOCUMENTATION
- ASBESTOS SAMPLING SURVEY
- LATEST BIENNIAL INSPECTION REPORT

STRUCTURE IDENTIFICATION

a. Bridge Identification Number (BIN): 1031529
b. Reference Marker: 81I 3303 2021
c. Region: NYSDOT Region 3
d. County: Onondaga
e. Town: City of Syracuse
f. Feature Carried: I-81
g. Feature Crossed: E. Calthrop Avenue

INTRODUCTION

a. Bridge History
   i. Year Built: 1965
   ii. Bridge Type: Three Span, Steel Multi-girder
   iii. Span Lengths:
      Span 1 Length: 34 feet
      Span 2 Length: 65 feet
      Span 3 Length: 42 feet
   iv. Out-to-Out Width: 100 feet
   v. Structural Ratings and Rankings
      1. Federal Sufficiency: 93.7 (September 2013)
      2. Condition Rating: 5.651 (September 2013)
      3. General Recommendation: 6
   vi. Live Load Posting (HS25): No
   vii. National Highway System (NHS): Yes
   viii. Previous work Done: Wearing surface overlay (1985). Paint metal surfaces (1985,2003). Conc. overlay NB (1990). Repair steel superstructure (1992,2003). Seal substructure (2003). Conc. substructure repairs & bearing restoration (2008). Deck & joint replacement (2012).
   ix. Planned Future Work: N/A
b. Highway Classification
   i. Functional Classification: Urban Principle Arterial - Interstate
   ii. Traffic Volumes

YEAR	AADT Projected
2014	53455
2034	79432
2054	118031

PROJECT LOCATION MAP

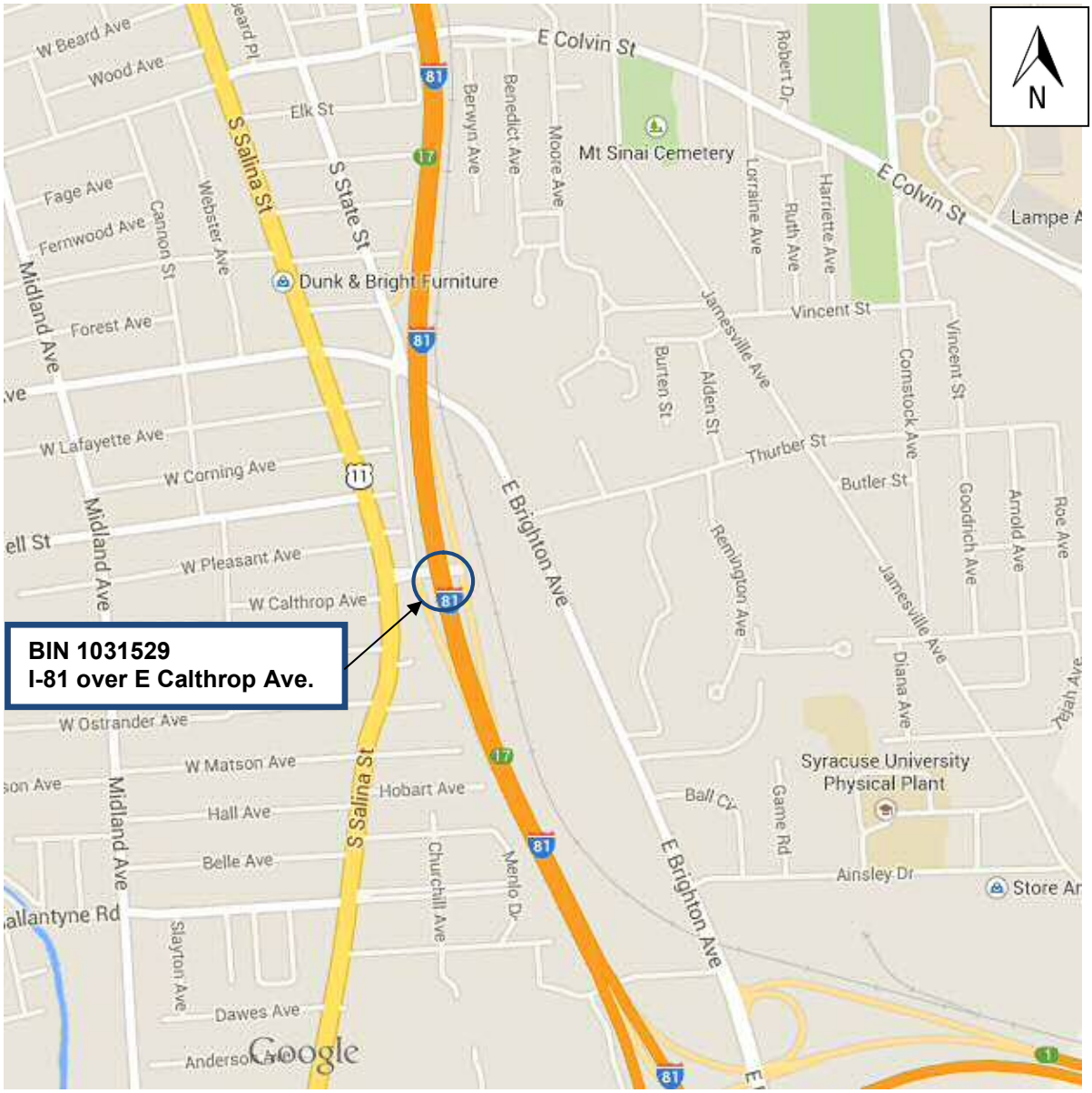

IN-DEPTH CONDITION DOCUMENTATION

NYS DEPT. OF TRANSPORTATION BRIDGE

BIN 1031529

SHEET: 1 OF 3

DATE: 4/1/2014

FEATURE CARRIED: I-81
FEATURE CROSSED: E. CALTHROP AVE.

TEAM LEADER: A.THOMPSON

A. TEAM LEADER: M. SAVINO

ITEM	REMARKS	PHOTO N0.
	The deck was replaced in 2012. Deck and top side elements were not inspected as part of this in-depth inspection.	
TP 349-24	Begin Abutment – Bearings: The fascia bearings and bearings 7 and 8 have rust and delamination but are functioning (Photo 1). The remainder of the bearings are in good condition.	1
TP 349-26	Begin Abutment – Seats and Pedestals: The bridge has stub abutments with no bridge seats. There is a 16” x 5” hollow area on the right face of Pedestal 3 that extends to the top 5” (Photo 2). Pedestal 9 has an 18” x 9” hollow area on the right face at the bottom (Photo 3). There is a 16” x 6” hollow area on the left face of Pedestal 11 that extends to the top 5” (Photo 4). The remainder of the pedestals are in good condition.	2-4
TP 349-28	Begin Abutment – Backwalls: There is one hollow area at the right measuring 2.5’ long x 16” high (Photo 5). The remainder of the backwall is in good condition.	5
TP 349-25	End Abutment – Bearings: The end abutment bearings are expansion sliding on bronze plates. The bronze plates are bowed due to pack rust on bearings 1-11 with bearing 10 being the most severe (Photo 6). Bearings 12-14 are in good condition with only minor surface rust.	6
TP 349-27	End Abutment – Seats and Pedestals: The bridge has stub abutments with no bridge seats. There is an 18” x 27” hollow area on the left face of Pedestal 10 (Photo 7). The remaining pedestals are in good condition.	7
TP 350-28	Spans 1 - 3 - Superstructure – Primary Members: Fascia Girder 14 in Span 2 had impact damage that was repaired in 1992. There is currently less severe impact damage resulting in the web being out of plumb and the bottom flange being deformed (Photos 8, 9, 10, 11). The girder was given a hands-on inspection and no cracks were found (Photo 12). The 2013 Level II Load Rating included top flange section loss in Span 1 discovered when the deck was removed. Girder 1 had 15% section loss to its top flange for the entire span length. Girder 6 had the same section loss as Girder 1. Girder 7 had 50% section loss for the first 3’; then 15% section loss for the next 22.44’; and finally 20% section loss for the last 8.48’. The section loss is not visible from below (Photo 13).	8-13

ITEM	REMARKS	PHOTO N0.
TP 350-30	Spans 1 through 3 - Superstructure – Paint: The tops of the fascia outside bottom flanges have +/-20% paint failure in all spans (Photo 14). The fascia outside web faces typically have +/-5% paint failure except Spans 1 and 2 near Pier 1 on the left where the bottom 5” has failed and has rust, delamination and minor pitting (Photos 15 and 16). There is no significant section loss to the overall height of the web at this location. Interior and fascia bottom faces of bottom flanges have areas of top coat failure exposing the bottom coat (Photo 8). Ends of girders and end diaphragms have up to 50% paint failure in locations of previously leaky joints (Photo 17).	8,14-17
TP 350-33	Pier 1 – Bearings: The begin row of bearings on Pier 1 are expansion sliding on bronze plates. The bronze plates appear in good condition with no significant distortion. The bearing plates in both rows have up to 50% paint failure, rust staining, and minor rust and delamination (Photo 18).	18
TP 350-37	Pier 1 – Cap Beam: There are several hollow sounding areas detailed in the Pier 1 Deterioration Sketch including a 3.7 square foot hollow area on the underside at the right and 2.5 square foot hollow area in the end face over Column 4 adjacent to Pedestal 9 (Photo 19). The cap beam also has areas of hairline and map cracking.	19
TP 350-38	Pier 1 Columns: There are hollow areas in the Column 6 end and left faces as detailed in the Pier 1 Deterioration Sketch (Photo 20). The remainder of the columns have hairline cracking but sound solid.	20
TP 350-33	Pier 2 – Bearings: The begin row of bearings on Pier 2 are expansion sliding on bronze plates. The bronze plates appear in good condition with no significant distortion. The bearing plates in both rows have up to 50% paint failure, rust staining, and minor rust and delamination (Photo 21).	21
TP 350-37	Pier 2 – Cap Beam: There are several hollow sounding areas detailed in the Pier 2 Deterioration Sketch including a 6.0 square foot cracked and hollow area on the begin face over Column 3 and a 3.3 square foot hollow area on the begin face under fascia Pedestal 14 (Photo 22). The cap beam also has areas of hairline and map cracking.	22
TP 350-38	Pier 2 Columns: There are hollow areas in the Column 5 begin face as detailed in the Pier 2 Deterioration Sketch (Photo 22). The remainder of the columns have areas of hairline cracking but sound solid.	22

ITEM	REMARKS	PHOTO N0.
	Special Emphasis Inspection Required Non-Redundant/Fracture Critical Members - No Pin and Hangers - No Fatigue-Prone Welds - Yes Non-Categorized Fatigue-Prone Details - No Other - No Category E welds – Span 2 interior girders – welds at ends of cover plates (Photo 23). Category D and E welds - angles welded to bottom flanges in Span 2 near begin and end (Photo 24 and 25). Category D welds at clips to junction box Girder 1 at end of Span 2 (Photo 26).	23-26

PLANS & SKETCHES

P.I.N. 0471

FED. RD. REG. NO.	STATE	FEDERAL AID PROJECT NO.	SHEET NO.	TOTAL SHEETS
1	NEW YORK	I-81-2(80)	201	26

INTERSTATE ROUTE 505
SYRACUSE CITY LINE TO SIZER STREET

B Opalka 3/85
Team Leader Opalka 9/90
3/1/89
P.J.B. 1989
P.J.R. 9/91
Opalka 9/13/93

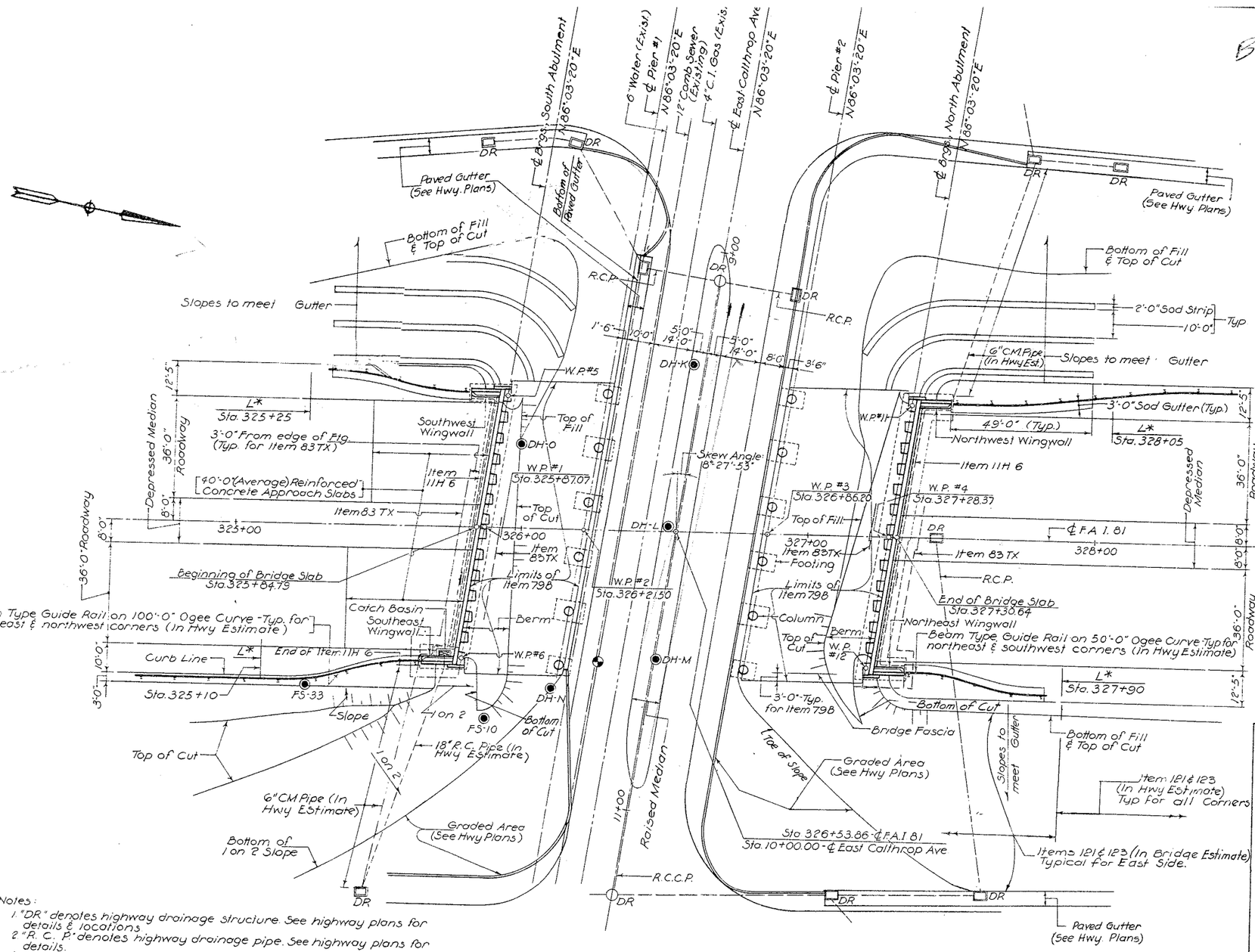

Notes:
1. "DR" denotes highway drainage structure. See highway plans for details & locations.
2. "R. C. P." denotes highway drainage pipe. See highway plans for details.
3. Grading and Layout Plan shown with bridge superstructure & cap beams of piers removed.
4. All existing utilities shown in "Grading and Layout Plan" to be abandoned.

GRADING AND LAYOUT PLAN
SCALE: 1" = 20'

Point of Min. Vertical Clearance
Location of Boring
L* Denotes Limits of Items 121, 123 & 124 in Bridge Estimate.

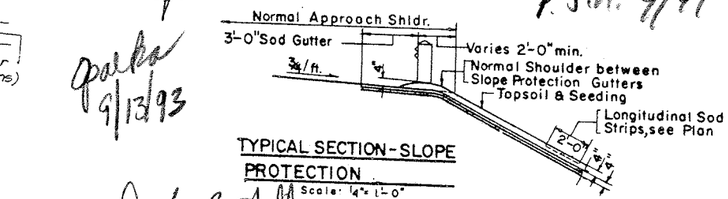

TYPICAL SECTION - SLOPE PROTECTION
Scale: ¼" = 1'-0"

Typ. for all corners except Southeast corner.

Douglas P Hillegas 8/29/95
Douglas P Hillegas 11/25/97
Douglas P Hillegas 11/4/99

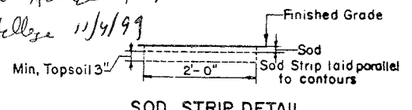

SOD STRIP DETAIL
Douglas P Hillegas 11/6/01 Scale: ¾" = 1'-0"

Stacy M Cole 10/17/02

1 17 Traverse Isolation 15/16/09

RMLN 2013

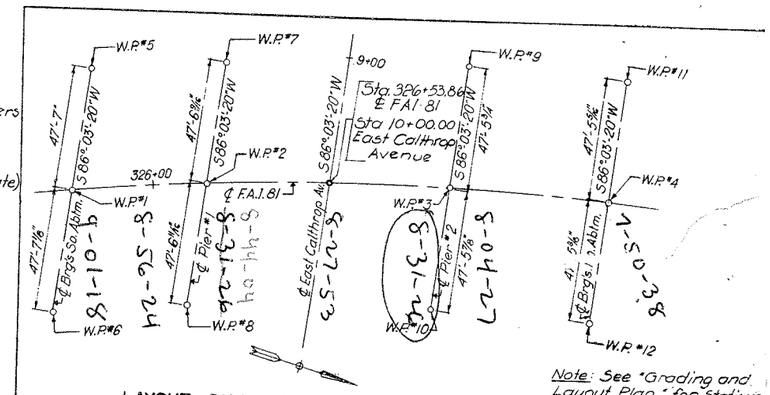

LAYOUT DIAGRAM FOR WORKING POINTS
N.T.S.

Note: See "Grading and Layout Plan" for Stations of Primary Working points.

PREPARED AND RECOMMENDED BY LEONARD S. WEGMAN CO.
BY Leonard Stanwell
N.Y.S. P.E. LIC. 23287 12-9-63

F.A.I. 81 OVER EAST CALTHROP AVENUE
GRADING AND LAYOUT PLAN

DRAWN BY:	CHECKED BY:	LEONARD S. WEGMAN CO. ENGINEERS	SCALE AS NOTED
HL	FG / LS		
REVIEWED BY: Leonard Stanwell	DATE 12-9-63	235 EAST 45TH STREET, NEW YORK 17, N.Y.	DWG. NO. F-2

DRIVE PRINT, INC., BROOKLYN 17, N.Y. REPRODUCIBLE NO. 4606

F.I.C. 64-7

FED. RD. REG. NO.	STATE	FEDERAL AID PROJECT NO.	SHEET NO.
1	NEW YORK	I-81-2(80)	202

INTERSTATE ROUTE 505
SYRACUSE CITY LINE TO SIZER ST

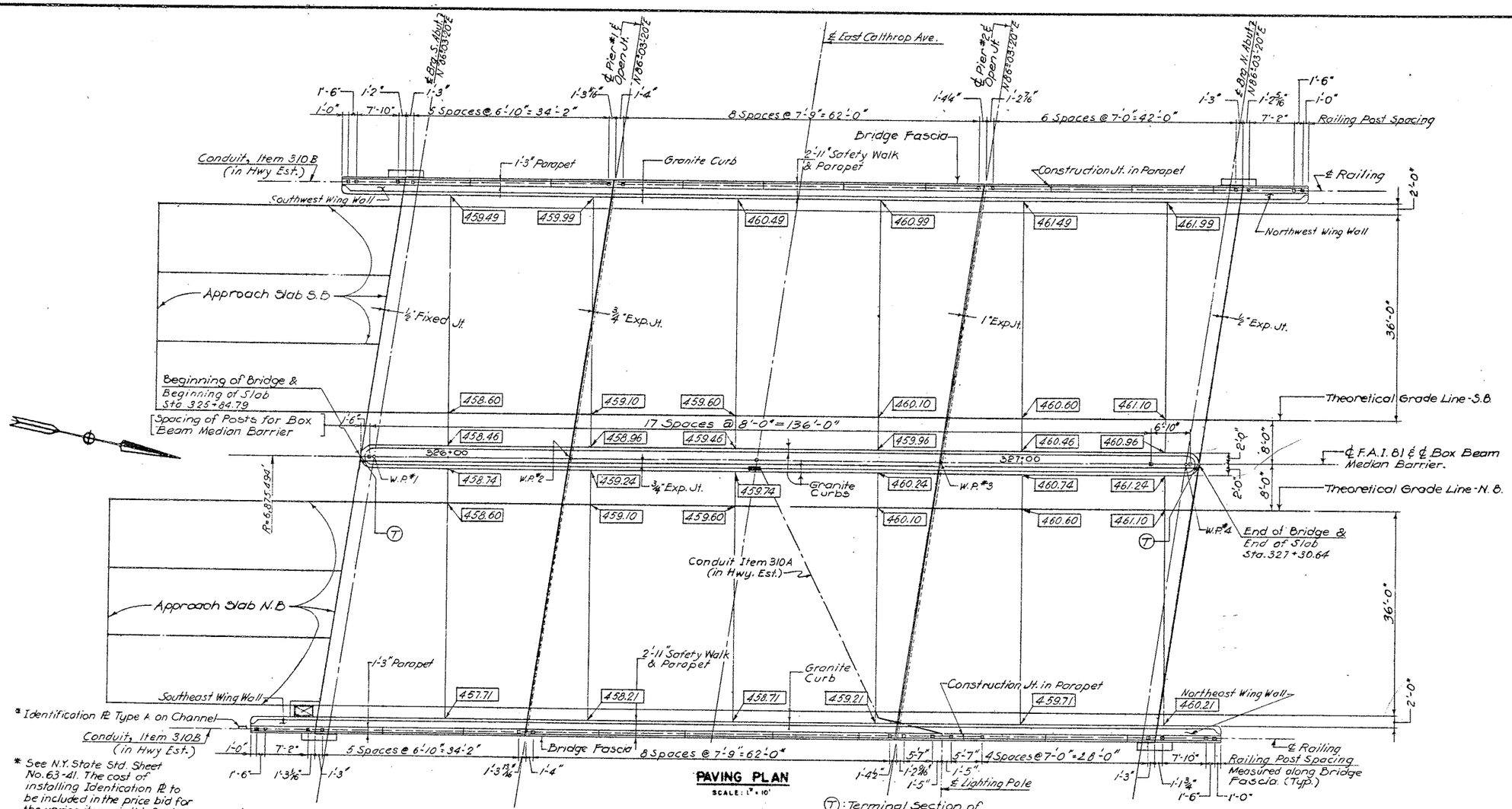

PAVING PLAN
SCALE: 1" = 10'

(T): Terminal Section of Box Beam Median Barrier See sheet No. F-21 for Details

: Top of pavement elevation, (25' intervals)

NOTE: EACH CONDUIT PASSING THROUGH AN EXPANSION JOINT SHALL BE PROVIDED WITH AN EXPANSION FITTING. THE EXPANSION FITTING DETAIL IS SHOWN ON DWG. NO. LD-1. PAYMENT OF FURNISHING AND INSTALLING EXPANSION FITTINGS SHALL BE INCLUDED IN CONDUIT ITEMS (IN HWY. ESTIMATE).

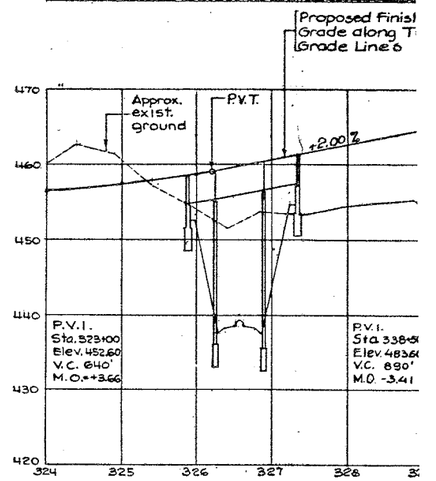

F.A.I. 81

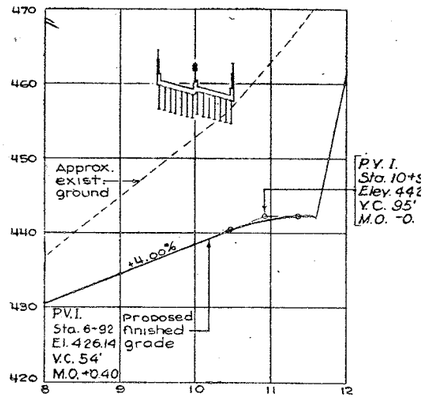

EAST CALTHROP AVE

PROFILES
SCALE

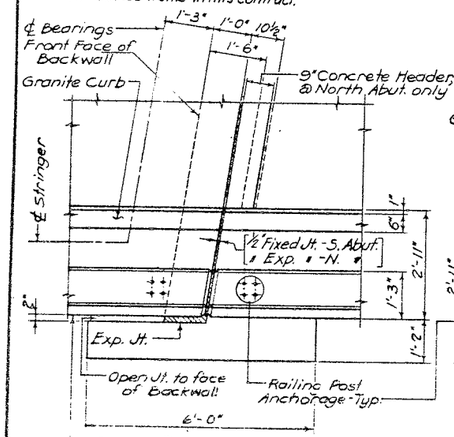

PARTIAL PLAN OF EXPANSION JOINT AT ABUTMENT

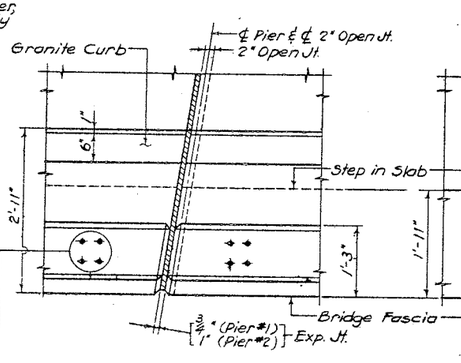

PARTIAL PLAN - AT TOP OF SAFETY WALK AND PARAPET
SCALE: 3/4" = 1'-0"

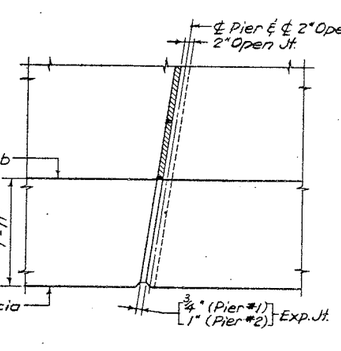

PARTIAL PLAN - AT TOP OF SLAB UNDER SAFETY WALK
SCALE: 3/4" = 1'-0"

EXPANSION JOINT OVER PIER

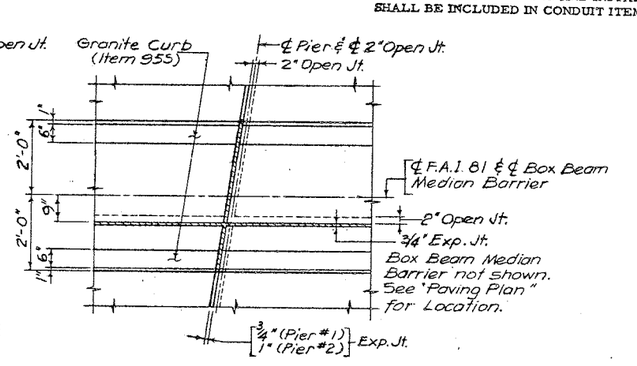

PARTIAL PLAN - AT TOP OF RAISED MALL
SCALE: 1" = 1'-0"

NOTES:
1. ALL DIMENSIONS
2. FOR LOCATION NOS. F-17 &
3. SEE DWG
4. SEE
5.
6.

PREPARED AND RECOMMENDED BY
LEONARD S. WEGMAN CO.
BY
N.Y.S. P.E. LIC. 23287 DATE 12

FED. RD. REG. NO.	STATE	FEDERAL AID PROJECT NO.	SHEET NO.
1	NEW YORK	I-81-2(80)	204

INTERSTATE ROUTE 505
SYRACUSE CITY LINE TO SIZER STRE

9-01-18

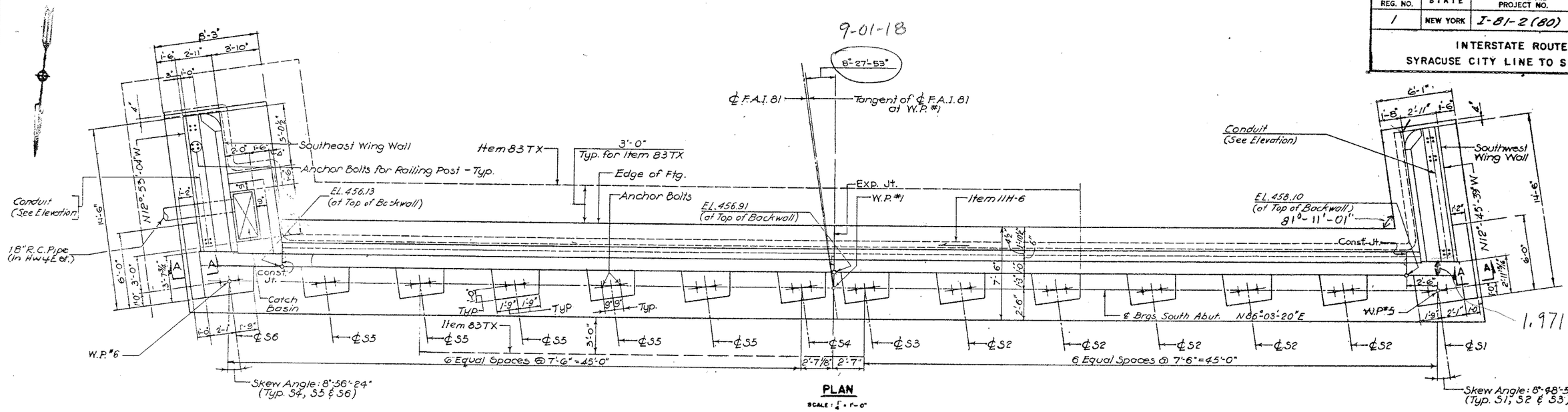

PLAN
SCALE: 1/4" = 1'-0"

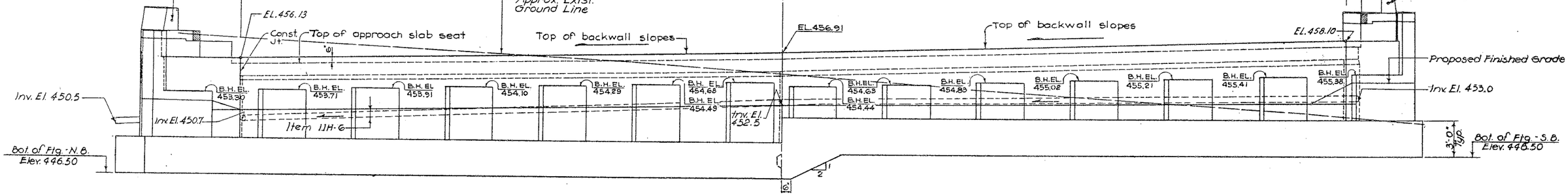

ELEVATION
SCALE: 1/4" = 1'-0"

SUBSTRUCTURE NOTES

1. TOP OF BACKWALLS ON WHICH ASBESTOS SHEET PACKING IS TO BE PLACED SHALL BE STEEL TROWEL FINISHED.
2. BITUMINOUS MATERIAL, ITEM 61, SHALL BE APPLIED TO THE BACKS OF ALL ABUTMENTS AND WINGWALLS ABOVE TOP OF FOOTINGS, WHERE FILL IS IN CONTACT WITH THE WALLS.
3. EPOXY PROTECTIVE COATING FOR CONCRETE SHALL BE APPLIED TO THE FOLLOWING SURFACES:
   ABUTMENTS - ALL EXPOSED PEDESTAL SURFACES, BRIDGE SEATS; EXPOSED VERTICAL SURFACES OF BACKWALL AND CURTAIN WALLS FACING THE SUPERSTRUCTURE.
   PIERS - ALL PEDESTAL SURFACES AND THE TOP SURFACES OF PIER BETWEEN PEDESTALS INCLUDING THE EDGE CHAMFER AT TOP EDGE OF PIER.
4. THE MAXIMUM FOUNDATION PRESSURES FOR DESIGN PURPOSES: ABUTMENT - 1.5 TONS PER SQUARE FOOT; PIER - 5 TONS PER SQUARE FOOT.
5. UNLESS OTHERWISE SHOWN, THE MINIMUM CONCRETE COVER FOR REINFORCING STEEL IN THE SUBSTRUCTURE SHALL BE AS FOLLOWS:

FOOTINGS (INCLUDING UNFORMED BOTTOM)	3"
WALLS ABOVE FOOTINGS	2"
BEAMS AND COLUMNS OF PIERS	2"

6. ITEM 83TX TO BE USED ONLY WHERE DEPTH OF EXCAVATION EXCEEDS 5 FEET.

NOTES:
1. TOP OF BACKWALL IS HORIZONTAL WITHIN THE AREAS MARKED "H", AND SLOPED WITHIN THE AREAS MARKED "S".
2. TYPICAL ABUTMENT SECTION, TYPICAL WING WALL SECTION AND WING WALL ELEVATION ARE SHOWN ON DWG. NO. F-7.
3. SECTION A-A AND DETAILS OF JOINTS AND CATCH BASIN ARE SHOWN ON DWG. NO. F-8.
4. ADDITIONAL PAYMENT ITEMS AND LIMITS FOR ABUTMENT AND WING WALLS ARE SHOWN ON DWG. NOS. F-2, F-4 & F-7.
5. FOR SPACING OF RAILING POSTS AND RAILING DETAILS SEE DWG. NOS. F-17 & F-18.

PREPARED AND RECOMMENDED BY LEONARD S. WEGMAN CO.
BY _____
N.Y.S. P.E. LIC. 23287 DATE 12-9-63

F.A.I. 81 OVER EAST CALTHROP AVENUE
SOUTH ABUTMENT

DRAWN BY:	CHECKED BY:	LEONARD S. WEGMAN CO. ENGINEERS	SCALE AS NOTED
S.B. M.B.	WNL F.A.	235 EAST 43TH STREET, NEW YORK 17, N.Y.	DWG. NO. F-4
REVIEWED BY:	DATE 12-9-63		

F.I.C. 64-7

FED. RD. REG. NO.	STATE	FEDERAL AID PROJECT NO.	SHEET NO.	TOTAL SHEETS
1	NEW YORK	I-81-2 (80)	205	289

INTERSTATE ROUTE 505
SYRACUSE CITY LINE TO SIZER STREET

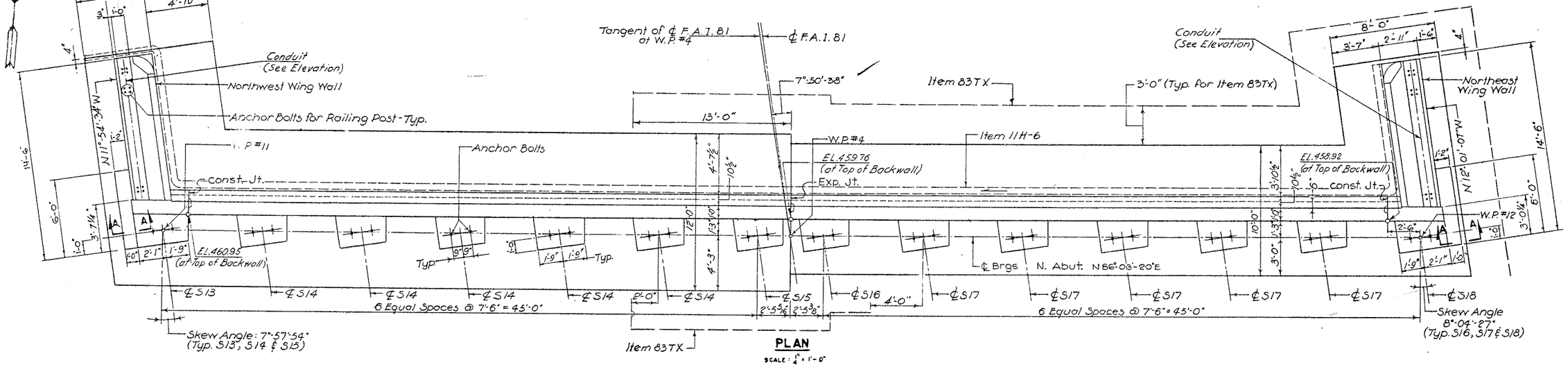

PLAN
SCALE: 1/4" = 1'-0"

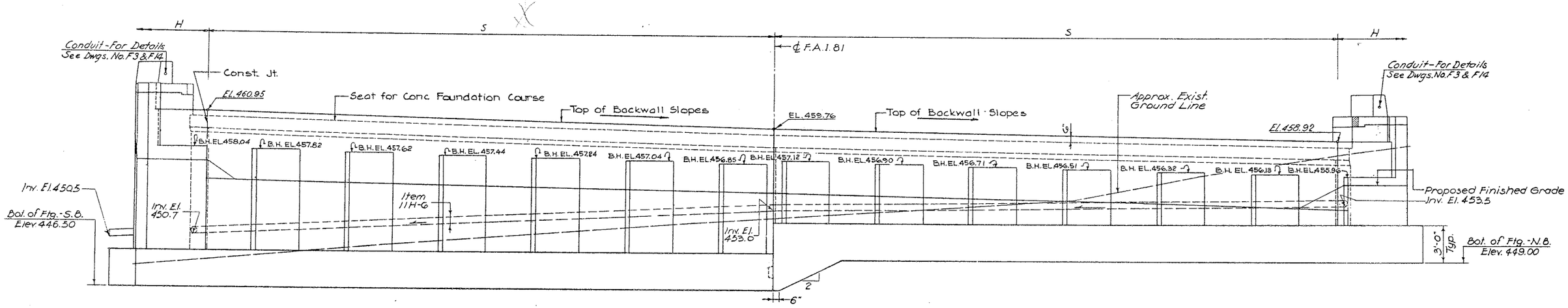

ELEVATION
Scale: 1/4" = 1'-0"

NOTES:
1. FOR SUBSTRUCTURE NOTES SEE DWG. NO. F-5.
2. TYPICAL ABUTMENT SECTION, TYPICAL WING WALL SECTION AND WING WALL ELEVATION ARE SHOWN ON DWG. NO. F-7.
3. SECTION A-A AND DETAILS OF JOINTS ARE SHOWN ON DWG. NO. F-8.
4. TOP OF BACKWALL IS HORIZONTAL WITHIN THE AREAS MARKED "H" AND SLOPED WITHIN THE AREAS MARKED "S".
5. ADDITIONAL PAYMENT ITEMS AND LIMITS FOR ABUTMENT AND WING WALLS ARE SHOWN ON DWG. NOS. F-2, F-4 & F-7.
6. FOR SPACING OF RAILING POSTS AND RAILING DETAILS SEE DWG. NOS. F-17 & F-18.

459.76
44825
11 51

F.A.I. 81 OVER EAST CALTHROP AVENUE
NORTH ABUTMENT

PREPARED AND RECOMMENDED BY LEONARD S. WEGMAN CO.
BY [signature]
N.Y.S.P.E. LIC. 23287 DATE 12-9-63

DRAWN BY: MB HL	CHECKED BY: WNL [signature]	LEONARD S. WEGMAN CO. ENGINEERS 235 EAST 45TH STREET, NEW YORK 17, N.Y.	SCALE AS NOTED
REVIEWED BY: [signature]	DATE 12-9-63		DWG. NO. F-6

F.I.C. 64-7

FED. RD. REG. NO.	STATE	FEDERAL AID PROJECT NO.	SHEET NO.	T SH
1	NEW YORK	I-81-2(80)	210	2

INTERSTATE ROUTE 505
SYRACUSE CITY LINE TO SIZER STREE

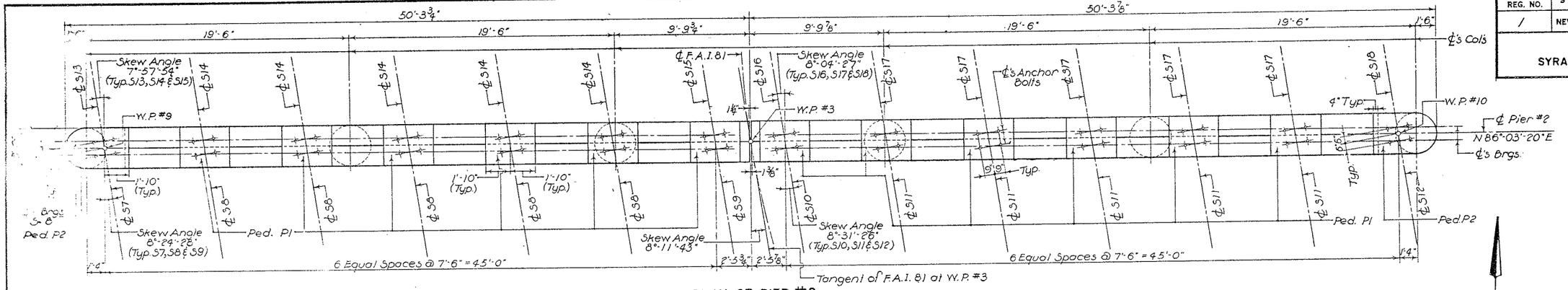

PLAN OF PIER #2

SCALE: 1/4" = 1'-0"

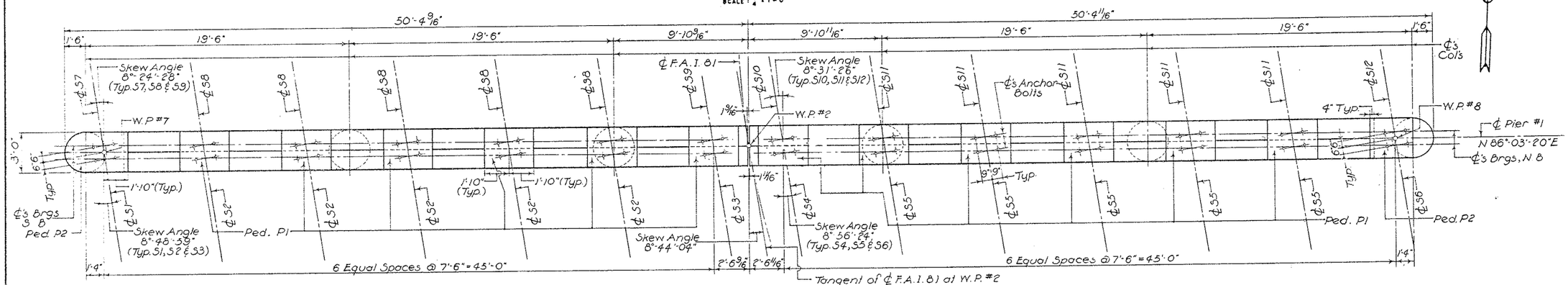

PLAN OF PIER #1

SCALE: 1/4" = 1'-0"

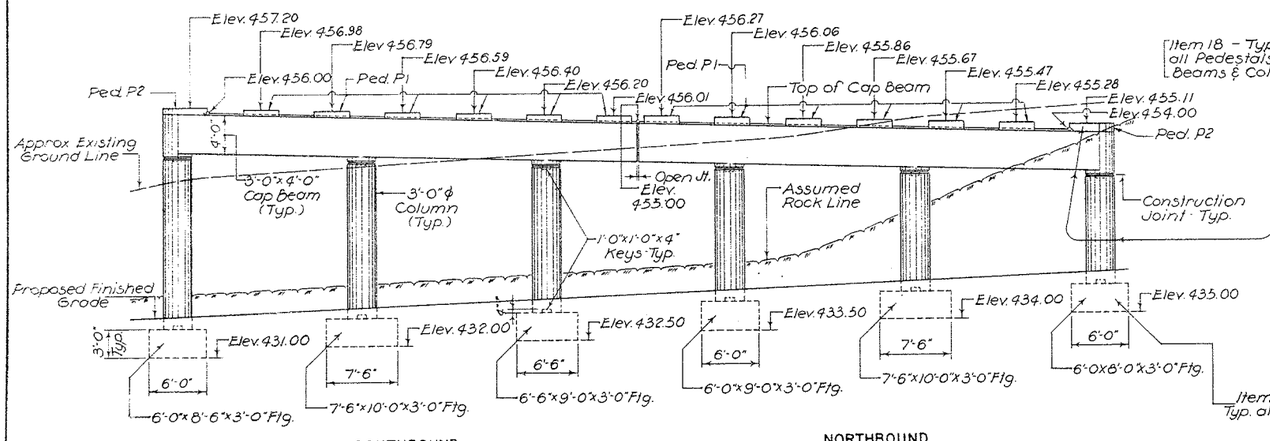

ELEVATION OF PIER #2

SCALE 1/8" = 1'-0"

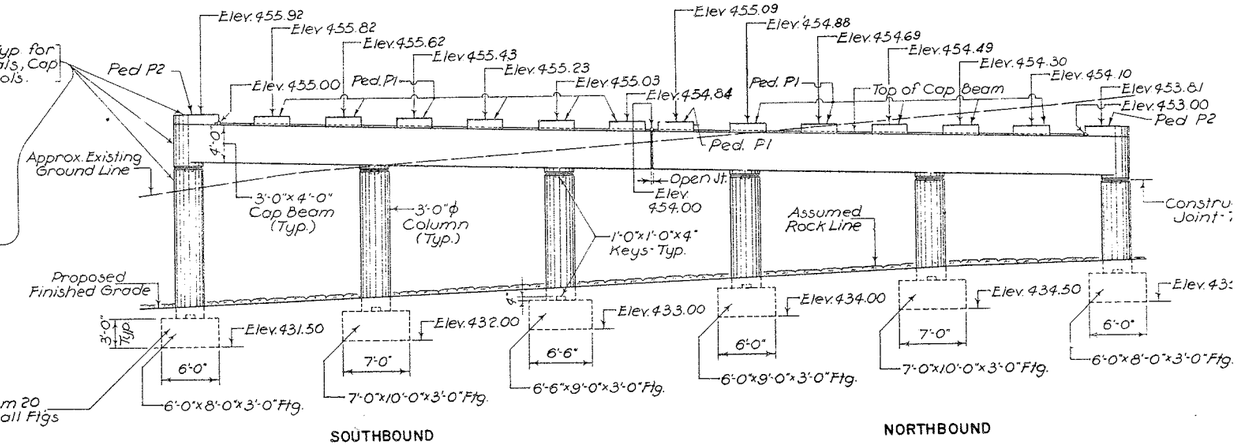

ELEVATION OF PIER #1

SCALE: 1/8" = 1'-0"

NOTE:
ALL DISINTEGRATED OR SHATTERED MATERIAL SHALL BE REMOVED TO LINES AND LEVELS ORDERED BY THE ENGINEER. WHERE SOUND ROCK IS FOUND BELOW THE PLANNED LEVELS OF THE BOTTOM OF FOOTINGS BACKFILL OF CLASS B CONCRETE SHALL BE INSTALLED TO THE LEVELS SHOWN ON PLANS. PAYMENT FOR THIS ADDITIONAL CONCRETE WILL BE MADE AT THE UNIT PRICE BID FOR CLASS B CONCRETE. ROCK REMOVED BELOW THE LEVELS DIRECTED BY THE ENGINEER AND OUTSIDE THE NEAT LINES MUST BE REPLACED BY BACKFILL OF CLASS B CONCRETE FOR WHICH NO PAYMENT WILL BE MADE

NOTES:
1. SEE DWG. NO. F-5 FOR SUBSTRUCTURE NOTES.
2. FOR ADDITIONAL PAYMENT ITEMS AND LIMITS SEE DWG. NOS. F-2 & F-4.
3. SEE DWG. NO. F-13 FOR BEARING PEDESTAL DETAILS
4. PED. = PEDESTAL.

F.A.I. 81 OVER EAST CALTHROP AVENUE
PIERS

PREPARED AND RECOMMENDED BY
LEONARD S. WEGMAN CO.
BY _____
N.Y.S. P.E. LIC. 23287 DATE 12-9-63

DRAWN BY:	CHECKED BY:	LEONARD S. WEGMAN CO. ENGINEERS	SCALE AS NOTE
HL	WNL	235 EAST 45th STREET, NEW YORK 17, N.Y.	DWG. NO.
REVIEWED BY:	DATE		
	12-9-63		

F.I.C. 64-7

FED. RD. REG. NO.	STATE	FEDERAL AID PROJECT NO.	SHEET NO.	TOTAL SHEETS
1	NEW YORK	I-81-2(80)	214	289

INTERSTATE ROUTE 505
SYRACUSE CITY LINE TO SIZER STREET

I81 SB

curb reveal both sides ± 8¼" See D 250712 & D 500578 for mono-Deck Rehab.

I-81 NB

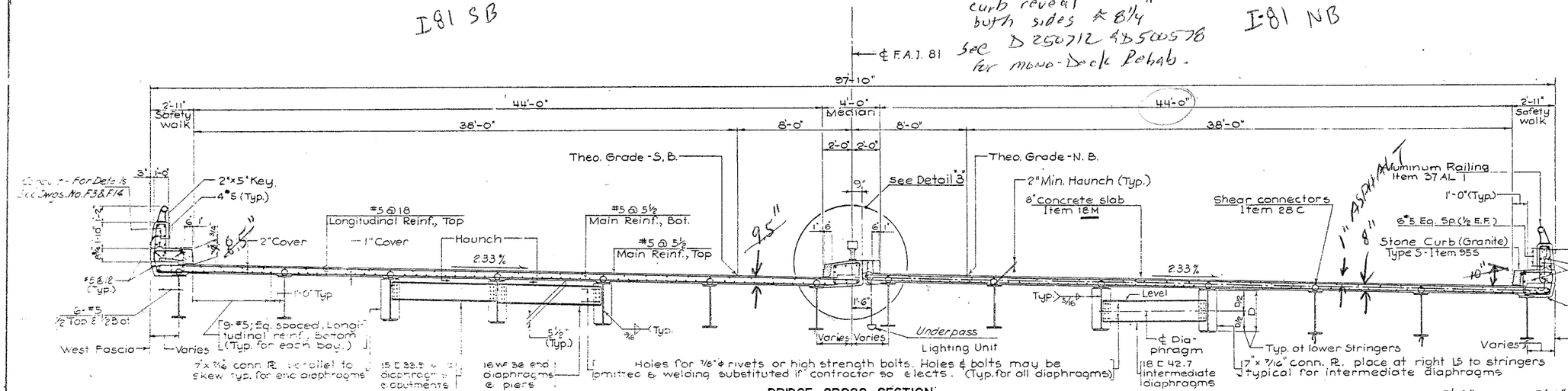

BRIDGE CROSS SECTION
SCALE: ¼" = 1'-0"

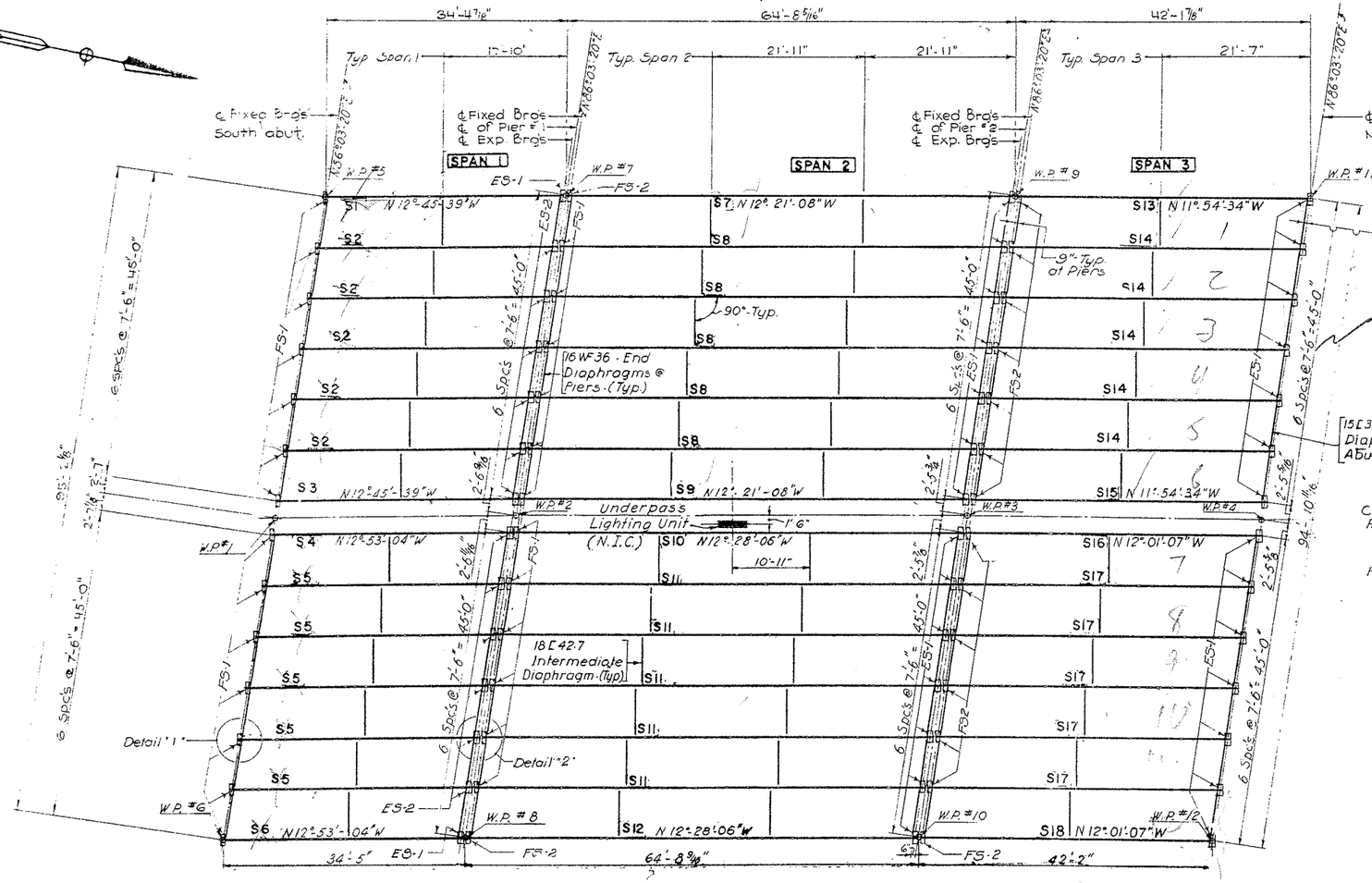

FRAMING PLAN
SCALE: 1" = 10'

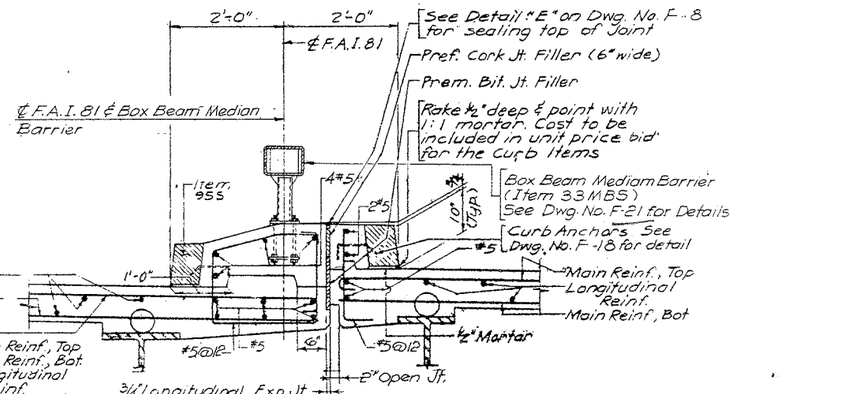

DETAIL "3"

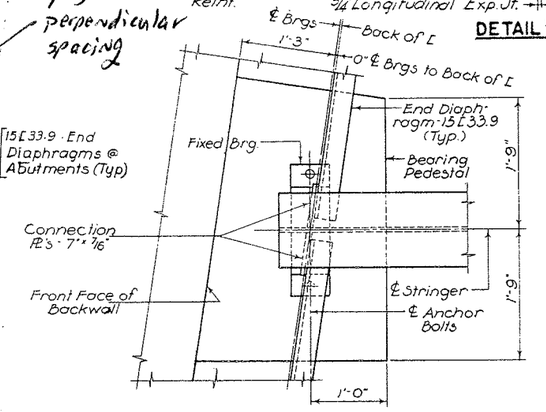

DETAIL "1"
SCALE: 1" = 1'-0"

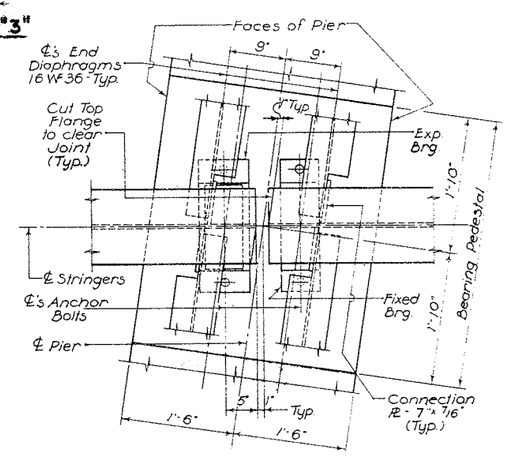

DETAIL "2"
SCALE: 1" = 1'-0"

PREPARED AND RECOMMENDED BY LEONARD S. WEGMAN CO.
BY Herbert Leonard
N.Y.S. P.E. LIC. 23287 DATE 12-9-63

F.A.I. 81 OVER EAST CALTHROP AVENUE
BRIDGE CROSS SECTION AND FRAMING PLAN

DRAWN BY:	CHECKED BY:	LEONARD S. WEGMAN CO. ENGINEERS	SCALE AS NOTED
MB HL	JC & PL	235 EAST 45TH STREET, NEW YORK 17, N.Y.	DWG. NO. F-15
REVIEWED BY:	DATE		
Leonard Wegman	12-9-63		

Pete Kiddleburn 12/2/05
Bruce 9/19/07
Tony Cole 10/15/09

1031529

FED ROAD REG. NO.	STATE	CONTRACT NO.	SHEET NO.	TOTAL SHEETS
1	N.Y.	D259742	537	788

INTERSTATE ROUTE 505 ONONDAGA INTERCHANGE
BRIDGE REHABILITATION PROJECT (ELEMENT SPECIFIC)
VARIOUS BRIDGES ON INTERSTATES 81 & 690
CITY OF SYRACUSE
ONONDAGA COUNTY
P.I.N. 3804.66 B.I.N. 1031529

NOTES:

STRUCTURAL LIFTING SHALL BE IN PLACE PRIOR TO SUBSTRUCTURE WORK AT NOTED LOCATIONS AND REMAIN UNTIL ITS COMPLETION.

CONTRACTOR SHALL COORDINATE WITH NIAGARA MOHAWK TO REMOVE AND REINSTALL LIGHT FIXTURES AND CONDUITS TO MAKE NEEDED REPAIRS TO THE SUBSTRUCTURES.

NO DECORATIVE FINISHES WILL BE INSTALLED UNDER THIS CONTRACT.

ALL JOINT WORK AND EXPANSION RELIEF REPAIRS SHALL BE COMPLETED PRIOR TO ANY STRUCTURAL LIFTING OR BEARING WORK.

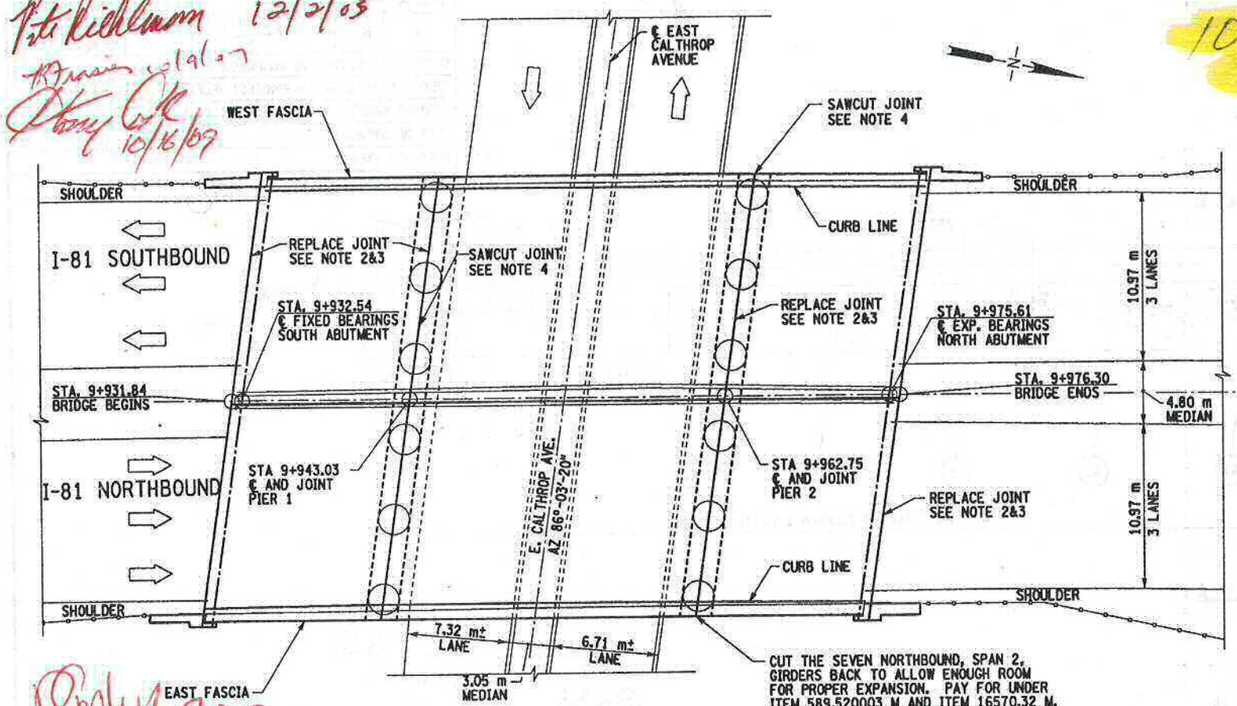

PLAN
2 0 5 10 m

P.V.I. STA. 9+845.04
ELEV. = 137.952
V.C. = 195.072 m
M.C. = +1.116 m

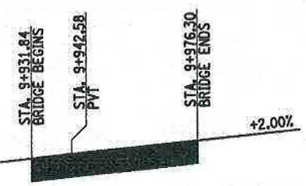



LOCATION MAP
SYRACUSE WEST QUADRANGLE

PROFILE 81 OVER E. CALTHROP AVE.
NTS

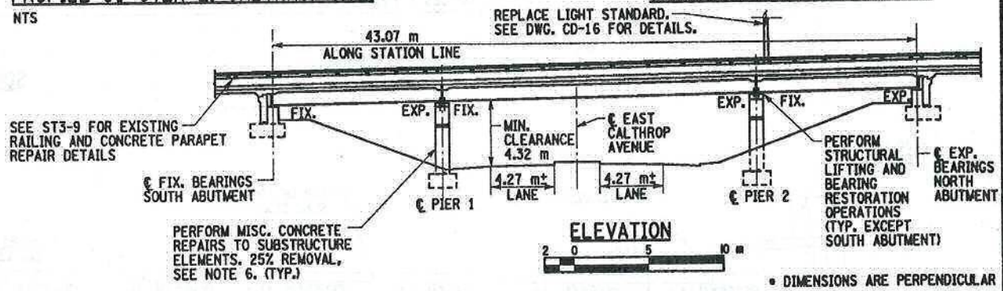

ELEVATION
2 0 5 10 m

* DIMENSIONS ARE PERPENDICULAR

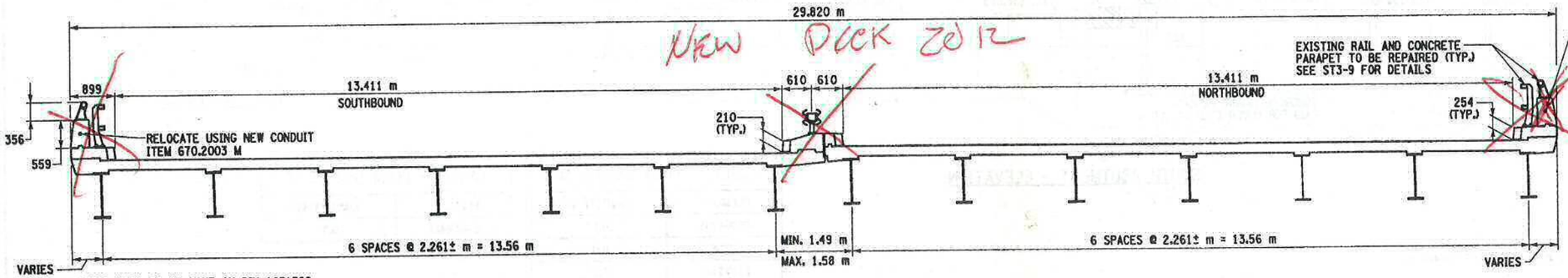

TYPICAL BRIDGE SECTION
0 1 2 3 m

ELEMENT SPECIFIC WORK TO BE DONE ON BIN 1031529:

1. ESTABLISH M&PT SCHEMES.
2. REMOVE ARMORED COMPRESSION SEAL JOINTS AT THE FOLLOWING LOCATIONS:
   - SOUTH ABUTMENT
   - PIER 1
   - PIER 2
   - NORTH ABUTMENT
3. INSTALL NEW ARMORLESS BRIDGE JOINT SYSTEM AT THE FOLLOWING LOCATIONS:
   - SOUTH ABUTMENT
   - PIER 1
   - PIER 2
   - NORTH ABUTMENT
4. SAWCUT CONCRETE TO PROVIDE ADEQUATE SPACE FOR PROPER EXPANSION AND CONTRACTION OF THE PROPOSED JOINTS, ITEM 02520.20 M.
   - PIER 1
   - PIER 2
5. CONTRACTOR SHALL COORDINATE RELOCATION OF CONDUIT & REPLACEMENT OF LIGHT STANDARDS WITH NIAGARA MOHAWK.
6. PERFORM CONCRETE REPAIRS FOR THE FOLLOWING SUBSTRUCTURE ELEMENTS:
   - SOUTH ABUTMENT - BACKWALL, PEDESTALS
   - PIER 1 - CAP BEAM, COLUMNS, AND PEDESTALS
   - PIER 2 - CAP BEAM, COLUMNS, AND PEDESTALS (STRUCTURAL LIFTING REQUIRED)
   - NORTH ABUTMENT - BACKWALL, PEDESTALS

   UNSUPPORTED COLUMNS, CAP BEAMS OR PEDESTALS WILL BE REPAIRED ONLY 25% AT A TIME.
7. REMOVE AND REPLACE PEDESTAL IN KIND AT THE FOLLOWING LOCATIONS:
   - PIER 1 - PEDESTAL 1
   - PIER 2 - PEDESTAL 2
   - NORTH ABUTMENT - PEDESTAL 12
8. REPAIR CRACKS IN THE SUBSTRUCTURES WITH INJECTION GROUTING.
9. ALL BEARINGS THAT DO NOT RECEIVE RESTORATION SHALL RECEIVE MAINTENANCE PAINTING AND LUBRICATION, TIGHTEN NUTS ON ANCHOR BOLTS AS NECESSARY.
10. REPLACE APPROXIMATELY 8 SM OF CONCRETE PAVING BLOCKS AT THE TOP RIGHT OF THE BEGIN ABUTMENT
11. PERFORM LOW STEEL FIXED BEARING RESTORATION AT THE FOLLOWING LOCATION:
    - PIER 1 - BEARINGS 1 - 14
    - PIER 2 - BEARINGS 1 - 14

    RESTORATION WORK SHALL INCLUDE THE FOLLOWING ITEMS:
    (1) STRUCTURAL LIFTING UNDER LIVE LOAD
    (2) REPLACEMENT OF SHEARED ANCHOR BOLTS AS NEEDED (IF PEDESTAL IS NOT SCHEDULED FOR REPLACEMENT, REMOVE TOP 150 mm OF CONCRETE PEDESTAL, ITEM 580.01 M AND ITEM 555.09 M)
    (3) COMMERCIAL BLAST CLEAN TO NEAR WHITE FINISH
    (4) MAINTENANCE PAINTING
    (5) BEARING LUBRICATION
    NOTE: FIXED BEARINGS SHALL NOT BE DISASSEMBLED UNLESS A.O.B.E.
12. PERFORM LOW STEEL EXPANSION BEARING RESTORATIONS AT THE FOLLOWING LOCATIONS:
    - PIER 1 - BEARINGS 1 - 14
    - PIER 2 - BEARINGS 1 - 14
    - NORTH ABUTMENT - BEARINGS 1 - 14

    RESTORATION WORK SHALL INCLUDE THE FOLLOWING ITEMS:
    (1) STRUCTURAL LIFTING UNDER LIVE LOAD
    (2) REPLACEMENT OF BRONZE EXP. BEARING PLATE
    (3) COMMERCIAL BLAST CLEAN TO NEAR WHITE FINISH
    (4) MAINTENANCE PAINTING
    (5) BEARING LUBRICATION
13. APPLY CONCRETE PROTECTIVE SEALER TO ALL EXPOSED SUBSTRUCTURE AND PARAPET AREAS.
14. PERFORM CONCRETE REPAIRS FOR PARAPETS AND INSTALL LIGHTING CONDUIT AND CONDUCTOR ALONG BACK EDGE OF PARAPET AND CAST IRON JUNCTION BOXES AT EACH LIGHT STANDARD IN ORDER TO MAINTAIN HIGHWAY LIGHTING AFTER THE PARAPET SECTIONS HAVE BEEN CUT.
15. COLUMN AND STEM REPAIR AREAS EXTEND PAST EXISTING GRADE AND THEREFORE, CONCRETE PAVING BLOCKS AND ASPHALT WORK IS REQUIRED AT THE BASE OF THE COLUMNS FOR THE FOLLOWING SUBSTRUCTURES:
    - PIER 1, 2
    - NORTH ABUTMENT
16. SEE DWG. BR-2 FOR DETAILS FOR PLACEMENT OF GALVANIC ANODES IN PEDESTAL REPAIR AREAS, ITEM 16582.99 M.

APPROXIMATE LOCATION OF EXISTING 50 mm ø CONDUIT. WEST PARAPET SIMILAR. RELOCATE USING NEW CONDUIT ITEM 670.2003 M. SEE NOTE 5 & CD-1 (TYP.)

SPECIAL NOTE: ALL DIMENSIONS ARE SHOWN IN MILLIMETERS UNLESS OTHERWISE NOTED

B.I.N. 1031529

AS BUILT REVISIONS

SIGNATURE DATE

INTERSTATE 81
OVER
E. CALTHROP AVE.

PLAN, ELEVATION AND TYPICAL SECTION

STATE OF NEW YORK
DEPARTMENT OF TRANSPORTATION

FILENAME	REGION	DATE	DRAWING NO.
380466CB_G1A	3	OCT. 2004	ST3-1

Stantec

DESIGN SUPERVISOR RON NORTHROP JOB MANAGER RON NORTHROP DESIGNED BY LOWELL LINGO CHECKED BY LOWELL LINGO DRAFTED BY RJ LAMPHEAR CHECKED BY LOWELL LINGO

DESIGN SUPERVISOR RON NORTHROP JOB MANAGER RON NORTHROP DESIGNED BY LOWELL LINGO DRAFTED BY RJ LAMPHEAR ESTIMATED BY LOWELL LINGO CHECKED BY RON NORTHROP CHECKED BY LOWELL LINGO

FED ROAD REG. NO.	STATE	CONTRACT NO.	SHEET NO.	TOTAL SHEETS
1	N.Y.	D259742	538	788

INTERSTATE ROUTE 505 ONONDAGA INTERCHANGE
BRIDGE REHABILITATION PROJECT (ELEMENT SPECIFIC)
VARIOUS BRIDGES ON INTERSTATES 81 & 690
CITY OF SYRACUSE
ONONDAGA COUNTY
P.I.N. 3804.66 B.I.N. 1031529

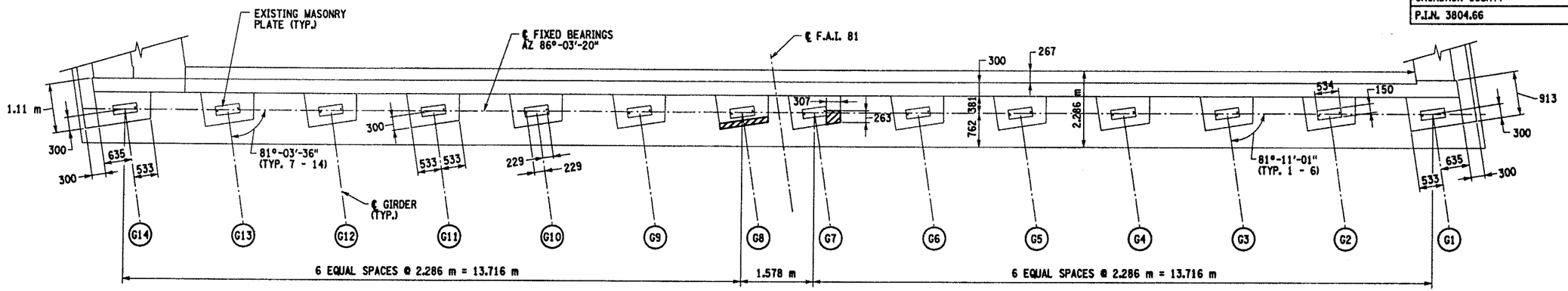

SOUTH ABUTMENT PLAN

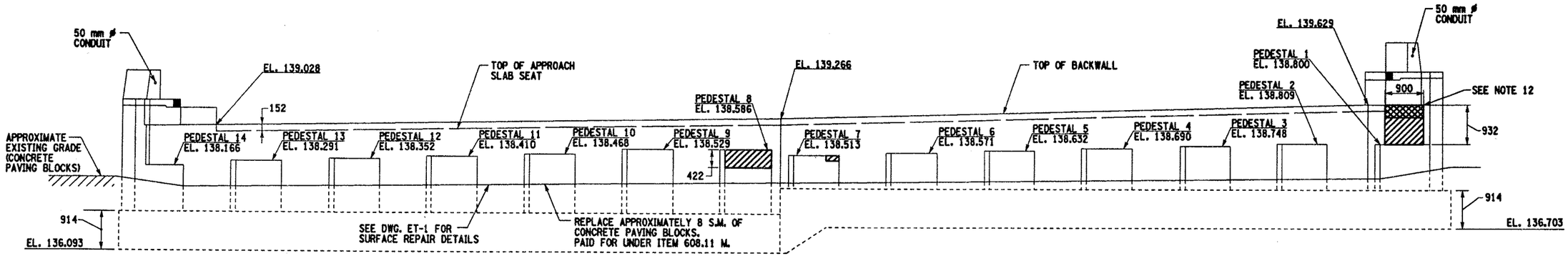

SOUTH ABUTMENT - ELEVATION

TABLE - ITEM 11555.8198 M	
ELEMENT	QUANTITY (M)
PIER	0.8

TABLE - ITEM 582.05 M	
ELEMENT	QUANTITY (CM)
PEDESTAL	0.1
ABUTMENT	0.0
BACKWALL	0.1

TABLE - ITEM 582.07 M	
ELEMENT	QUANTITY (SM)
BACKWALL	0.3

LIST OF ITEMS USED:

ITEM 11555.8198 M - CRACK REPAIR (3 mm OR WIDER) BY INJECTION OF PORTLAND CEMENT GROUT, (M)

ITEM 18559.1696 M - PROTECTIVE SEALING OF STRUCTURAL CONCRETE, (SM)

ITEM 16570.32 M - LOCALIZED PAINTING OF BARE STRUCTURAL STEEL, (SM)

ITEM 16570.76 M - LOCAL VACUUM CONTAINED CLEANING STRUCTURAL STEEL - IRREGULAR SURFACES, (SM)

ITEM 582.05 M - REMOVAL OF STRUCTURAL CONCRETE REPLACEMENT WITH CLASS A CONCRETE, (CM)

ITEM 582.07 M - REMOVAL OF STRUCTURAL CONCRETE REPLACEMENT WITH VERTICAL AND OVERHEAD PATCHING MATERIAL, (SM)

ITEM 10564.11 M - REMOVE, STORE AND RESET DIAPHRAGMS ON STRUCTURE (EA)

LEGEND:

AREA OF PROPOSED WORK; ITEM 582.05 M REMOVAL OF STRUCTURAL CONCRETE TO AT LEAST 40 mm BEHIND REINFORCEMENT- REPLACE WITH CLASS A CONCRETE.

AREA OF PROPOSED WORK; ITEM 582.07 M REMOVAL OF STRUCTURAL CONCRETE - AT LEAST 40 mm BEHIND REINFORCEMENT REPLACE WITH VERTICAL AND OVERHEAD PATCHING MATERIAL.

NOTES:

1. ALL DIMENSIONS SHOWN FOR CONCRETE REMOVAL ARE APPROXIMATE AND SHALL BE FIELD VERIFIED BY THE CONTRACTOR AND EIC.
2. ALL DIMENSIONS SHOWN FOR EXISTING ABUTMENT ARE APPROXIMATE AND SHALL BE FIELD VERIFIED BY THE CONTRACTOR AND EIC.
3. CONCRETE REMOVAL TO LIMITS SHOWN INCLUDES SOUND CONCRETE AROUND THE PERIMETER OF THE DETERIORATED CONCRETE, A.O.B.E.
4. WHEN REMOVING EXISTING CONCRETE, SAWCUT 5 mm MIN. TO PRODUCE NEAT REMOVAL LINES. ANY COST TO BE INCLUDED IN THE BID PRICE FOR ITEM 582.05 M AND 582.07 M.
5. ELEVATIONS ARE GIVEN FOR REFERENCE ONLY.
6. FOR REMOVAL DETAILS SEE DWG. BR-1.
7. RESTORE TO ORIGINAL DIMENSIONS.
8. PEDESTALS NUMBERED FROM WEST TO EAST.
9. NO DECORATIVE FINISHES WILL BE INSTALLED UNDER THIS CONTRACT.
10. REFER TO CONTRACT F.I.C. 65-28 FOR ORIGINAL CONSTRUCTION DETAILS.
11. SEE DRAWING BR-2 FOR DETAILS FOR PLACEMENT OF GALVANIC ANODES IN PEDESTAL AREAS.
12. THE CONTRACTOR SHALL REMOVE AND REINSTALL THE END DIAPHRAGM FOR ACCESS TO THIS REPAIR AREA LOCATED ON THE BACKWALL. TO BE PAID UNDER ITEM 10564.11 M.
13. ALL BEARINGS THAT DO NOT RECEIVE RESTORATION SHALL RECEIVE MAINTENANCE PAINTING AND LUBRICATION, TIGHTEN NUTS ON ANCHOR BOLTS AS NECESSARY.

0.5 0 1 2 3 m

Stantec

B.I.N. 1031529

SPECIAL NOTE: ALL DIMENSIONS ARE SHOWN IN MILLIMETERS UNLESS OTHERWISE NOTED

AS BUILT REVISIONS

SIGNATURE DATE

INTERSTATE 81
OVER
E. CALTHROP AVE.

SOUTH ABUTMENT

STATE OF NEW YORK
DEPARTMENT OF TRANSPORTATION

FILENAME	REGION	DATE	DRAWING NO.
380466CB_A1A	3	OCT. 2004	ST3-2

FED ROAD REG. NO.	STATE	CONTRACT NO.	SHEET NO.	TOTAL SHEETS
1	N.Y.	D259742	539	788

INTERSTATE ROUTE 505 ONONDAGA INTERCHANGE
BRIDGE REHABILITATION PROJECT (ELEMENT SPECIFIC)
VARIOUS BRIDGES ON INTERSTATES 81 & 690
CITY OF SYRACUSE
ONONDAGA COUNTY
P.I.N. 3804.66 B.I.N. 1031529

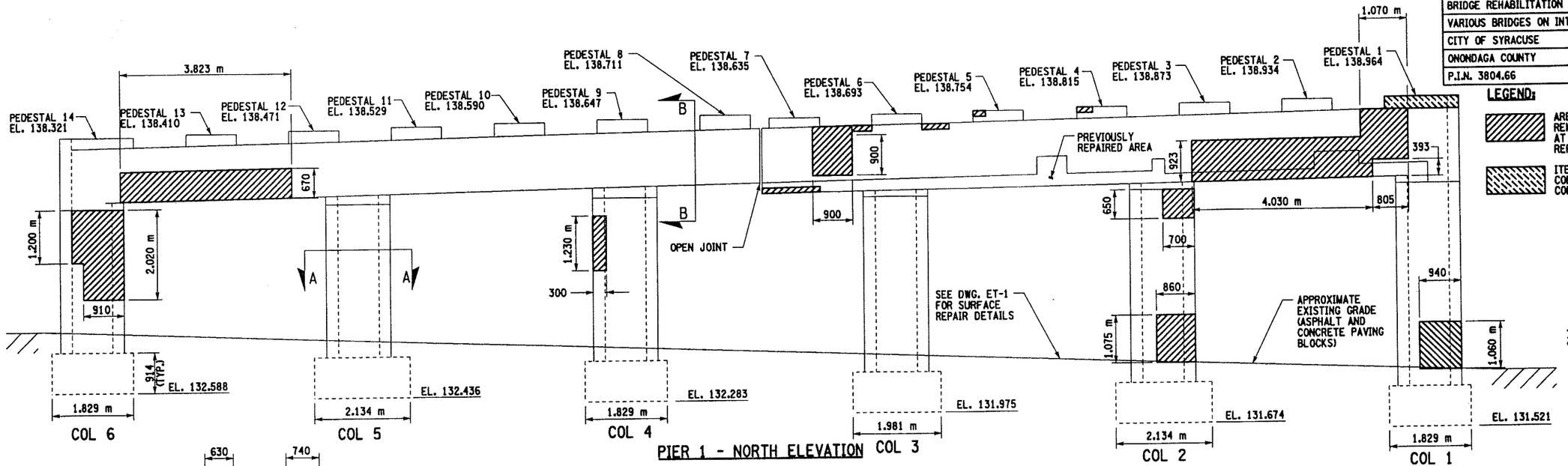

PIER 1 - NORTH ELEVATION

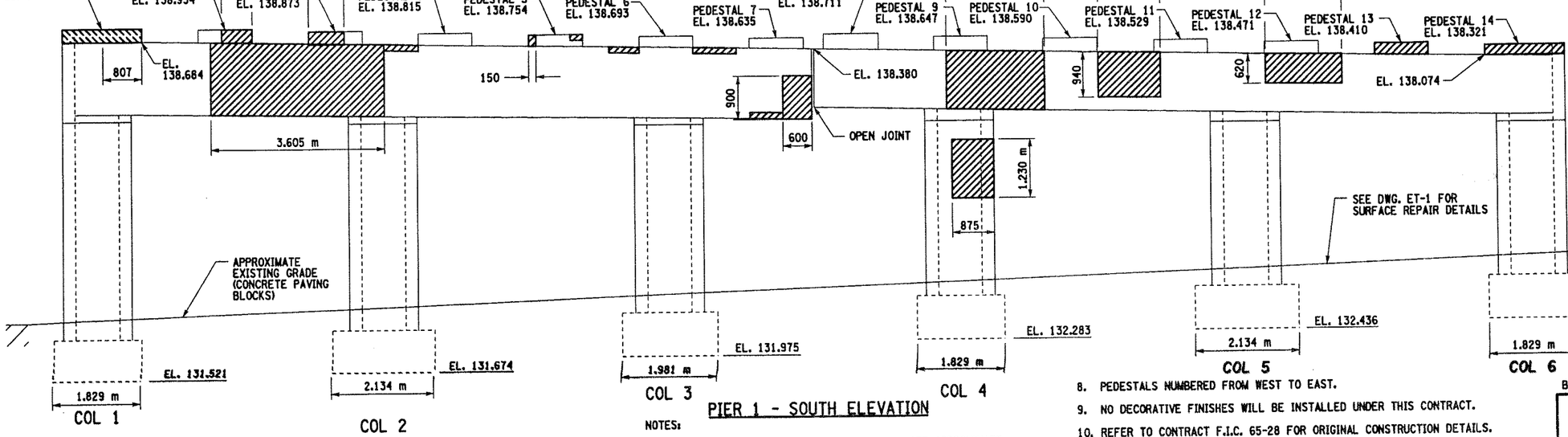

PIER 1 - SOUTH ELEVATION

LEGEND:

AREA OF PROPOSED WORK; ITEM 582.05 M REMOVAL OF STRUCTURAL CONCRETE TO AT LEAST 40mm BEHIND REINFORCEMENT- REPLACE WITH CLASS A CONCRETE.

ITEM 580.01 M - REMOVAL OF STRUCTURAL CONCRETE (CM) AND ITEM 555.09 M - CONCRETE FOR STRUCTURES, CLASS HP (CM)

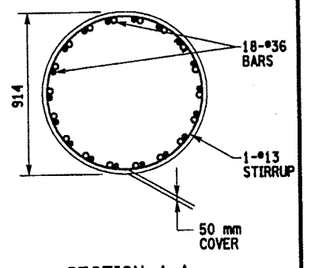

SECTION A-A
NTS

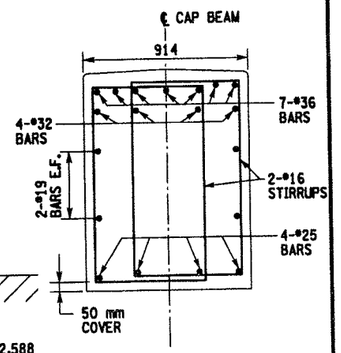

SECTION B-B
NTS

SPECIAL NOTE: ALL DIMENSIONS ARE SHOWN IN MILLIMETERS UNLESS OTHERWISE NOTED

LIST OF ITEMS USED:

ITEM 555.09 M - CONCRETE FOR STRUCTURES, CLASS HP, (CM)

ITEM 11555.8198 M - CRACK REPAIR (3 mm OR WIDER) BY INJECTION OF PORTLAND CEMENT GROUT, (M)

ITEM 18559.1696 M - PROTECTIVE SEALING OF STRUCTURAL CONCRETE, (SM)

ITEM 15565.4302 M - BRIDGE BEARING RESTORATION (EA)

ITEM 580.01 M - REMOVAL OF STRUCTURAL CONCRETE, (CM)

ITEM 582.05 M - REMOVAL OF STRUCTURAL CONCRETE REPLACEMENT WITH CLASS A CONCRETE, (CM)

ITEM 585.01 M - STRUCTURAL LIFTING OPERATIONS - TYPE A (LIFTING FROM PIER SEAT)

NOTES:

1. ALL DIMENSIONS SHOWN FOR CONCRETE REMOVAL ARE APPROXIMATE AND SHALL BE FIELD VERIFIED BY THE CONTRACTOR AND EIC.
2. ALL DIMENSIONS SHOWN FOR EXISTING PIER ARE APPROXIMATE AND SHALL BE FIELD VERIFIED BY THE CONTRACTOR AND EIC.
3. CONCRETE REMOVAL TO LIMITS SHOWN INCLUDES SOUND CONCRETE AROUND THE PERIMETER OF THE DETERIORATED CONCRETE, A.O.B.E.
4. WHEN REMOVING EXISTING CONCRETE, SAWCUT 5 mm MIN. TO PRODUCE NEAT REMOVAL LINES. ANY COST TO BE INCLUDED IN THE BID PRICE FOR ITEM 582.05 M.
5. ELEVATIONS ARE GIVEN FOR REFERENCE ONLY.
6. FOR REMOVAL DETAILS SEE DWG. BR-1.
7. RESTORE TO ORIGINAL DIMENSIONS.
8. PEDESTALS NUMBERED FROM WEST TO EAST.
9. NO DECORATIVE FINISHES WILL BE INSTALLED UNDER THIS CONTRACT.
10. REFER TO CONTRACT F.I.C. 65-28 FOR ORIGINAL CONSTRUCTION DETAILS.
11. SEE DRAWING BR-2 FOR DETAILS FOR PLACEMENT OF GALVANIC ANODES IN PEDESTAL AREAS.
12. STRUCTURAL LIFTING OPERATIONS FOR BEARING RESTORATION (ITEM 585.01 M - TYPE A LIFTING FROM PIER SEAT) SEE DWG. NO. TSL-1.
13. PERFORM LOW FIXED BEARING RESTORATION TO BEARINGS 1 - 14 (ITEM 15565.4302 M) SEE DWG. NO. BR-5.
14. PERFORM LOW EXPANSION BEARING RESTORATION TO BEARINGS 1 - 14 (ITEM 15565.4302 M) SEE DWG. NO. BR-5.

0.5 0 1 2 3 m

Stantec

B.I.N. 1031529

AS BUILT REVISIONS

SIGNATURE DATE

INTERSTATE 81
OVER
E. CALTHROP AVE.

PIER 1 (1 OF 2)

STATE OF NEW YORK
DEPARTMENT OF TRANSPORTATION

FILENAME	REGION	DATE	DRAWING NO.
380466CB_P1A	3	OCT. 2004	ST3-3

DESIGN SUPERVISOR RON NORTHROP - JOB MANAGER RON NORTHROP DESIGNED BY LOWELL LINGO CHECKED BY RON NORTHROP ESTIMATED BY LOWELL LINGO DRAFTED BY RJ LAMPHEAR CHECKED BY LOWELL LINGO

FED ROAD REG. NO.	STATE	CONTRACT NO.	SHEET NO.	TOTAL SHEETS
1	N.Y.	D259742	540	788

INTERSTATE ROUTE 505 ONONDAGA INTERCHANGE
BRIDGE REHABILITATION PROJECT (ELEMENT SPECIFIC)
VARIOUS BRIDGES ON INTERSTATES 81 & 690
CITY OF SYRACUSE
ONONDAGA COUNTY
P.I.N. 3804.66 B.I.N. 1031529

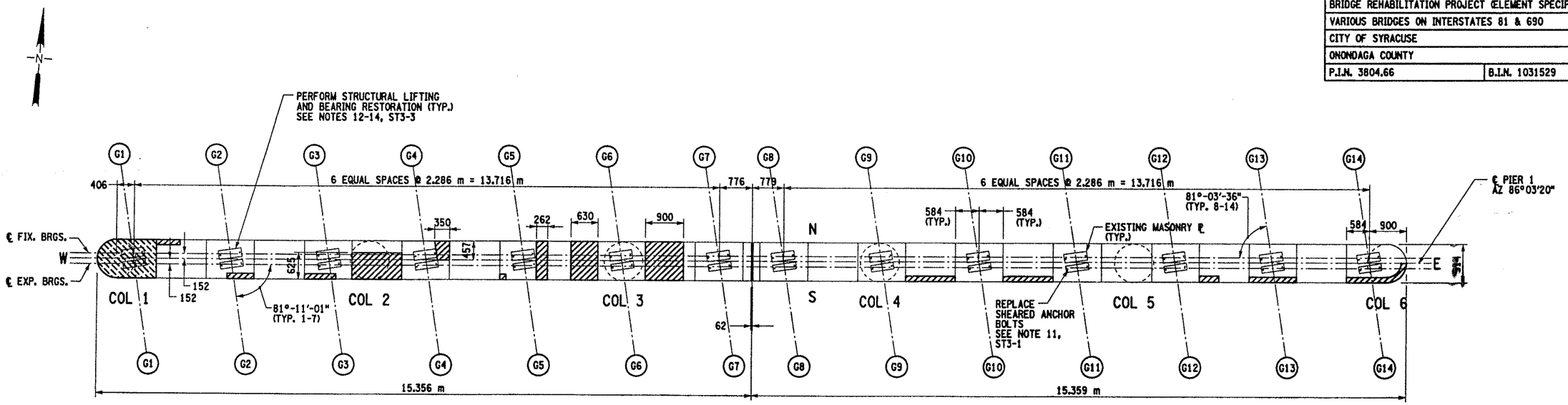

PIER 1 - TOP OF CAP BEAM PLAN

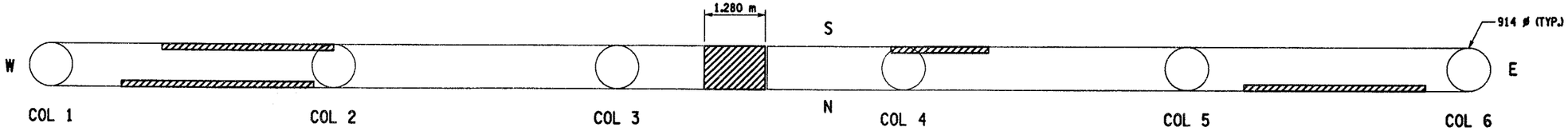

PIER 1 - UNDERSIDE OF CAP BEAM PLAN

LIST OF ITEMS USED:

ITEM 555.09 M - CONCRETE FOR STRUCTURES, CLASS HP, (CM)

ITEM 11555.8198 M - CRACK REPAIR (3 mm OR WIDER) BY INJECTION OF PORTLAND CEMENT GROUT, (M)

ITEM 18559.1696 M - PROTECTIVE SEALING OF STRUCTURAL CONCRETE, (SM)

ITEM 15565.4302 M - BRIDGE BEARING RESTORATION (EA)

ITEM 580.01 M - REMOVAL OF STRUCTURAL CONCRETE, (CM)

ITEM 582.05 M - REMOVAL OF STRUCTURAL CONCRETE REPLACEMENT WITH CLASS A CONCRETE, (CM)

ITEM 585.01 M - STRUCTURAL LIFTING OPERATIONS - TYPE A (LIFTING FROM PIER SEAT)

LEGEND:

AREA OF PROPOSED WORK; ITEM 582.05 M REMOVAL OF STRUCTURAL CONCRETE TO AT LEAST 40mm BEHIND REINFORCEMENT- REPLACE WITH CLASS A CONCRETE.

ITEM 580.01 M - REMOVAL OF STRUCTURAL CONCRETE (CM) AND ITEM 555.09 M - CONCRETE FOR STRUCTURES, CLASS HP (CM)

TABLE - ITEM 582.05 M	
ELEMENT	QUANTITY (CM)
PEDESTAL	0.2
PIER	3.6

TABLE - ITEM 555.09 M	
ELEMENT	QUANTITY (CM)
PEDESTAL	0.4

TABLE OF STRUCTURAL LIFTING					
LOCATION	ITEM	QTY (EA)	DL (KN)	LL+I (KN)	TOTAL (KN)
PED. 1-14 FIX.	585.01 M	14	101	314	415
PED. 1-14 EXP.	585.01 M	14	198	359	557

TABLE - ITEM 11555.8198 M	
ELEMENT	QUANTITY (SM)
PIER	2.7

0.5 0 1 2 3 m

Stantec

SPECIAL NOTE: ALL DIMENSIONS ARE SHOWN IN MILLIMETERS UNLESS OTHERWISE NOTED

B.I.N. 1031529

AS BUILT REVISIONS

SIGNATURE DATE

INTERSTATE 81
OVER
E. CALTHROP AVE.
PIER 1 (2 OF 2)

STATE OF NEW YORK
DEPARTMENT OF TRANSPORTATION

FILENAME	REGION	DATE	DRAWING NO.
380466CB_P1B	3	OCT. 2004	ST3-4

DESIGN SUPERVISOR RON NORTHROP JOB MANAGER RON NORTHROP DESIGNED BY LOWELL LINGO CHECKED BY LOWELL LINGO DRAFTED BY RJ LAMPHEAR CHECKED BY LOWELL LINGO ESTIMATED BY RON NORTHROP

DESIGN SUPERVISOR RON NORTHROP JOB MANAGER RON NORTHROP DESIGNED BY LOWELL LINGO CHECKED BY RON NORTHROP ESTIMATED BY LOWELL LINGO DRAFTED BY RJ LAMPHEAR CHECKED BY LOWELL LINGO

FED ROAD REG. NO.	STATE	CONTRACT NO.	SHEET NO.	TOTAL SHEETS
1	N.Y.	D259742	541	788

INTERSTATE ROUTE 505 ONONDAGA INTERCHANGE
BRIDGE REHABILITATION PROJECT (ELEMENT SPECIFIC)
VARIOUS BRIDGES ON INTERSTATES 81 & 690
CITY OF SYRACUSE
ONONDAGA COUNTY
P.I.N. 3804.66 B.I.N. 1031529

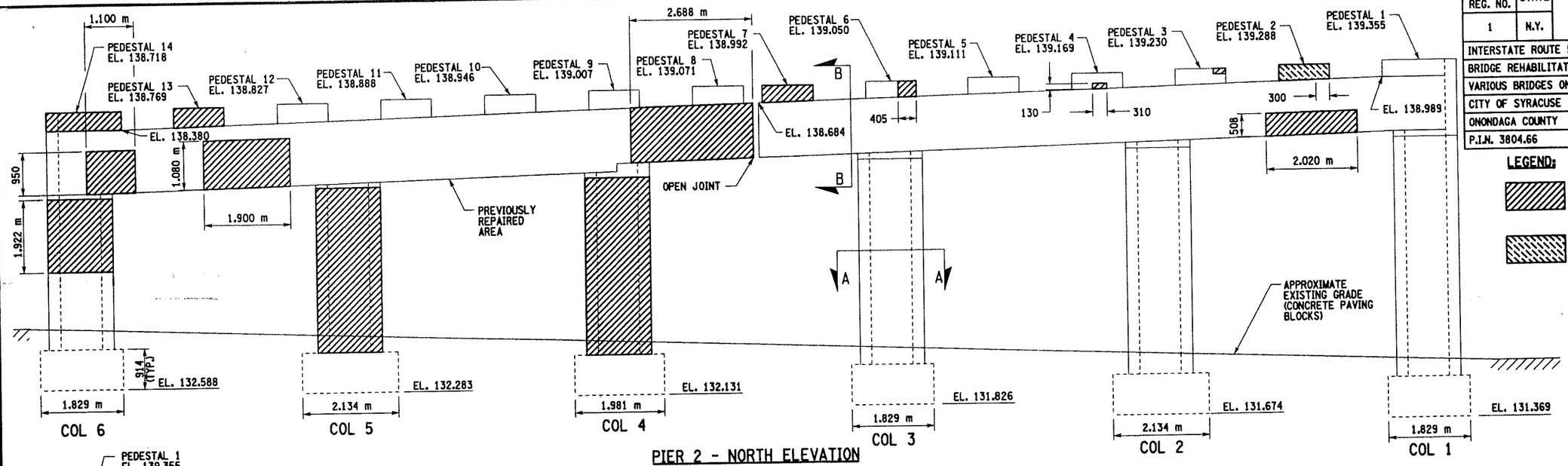

PIER 2 - NORTH ELEVATION

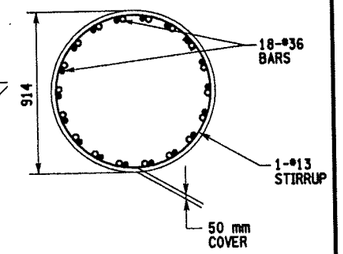

SECTION A-A
NTS

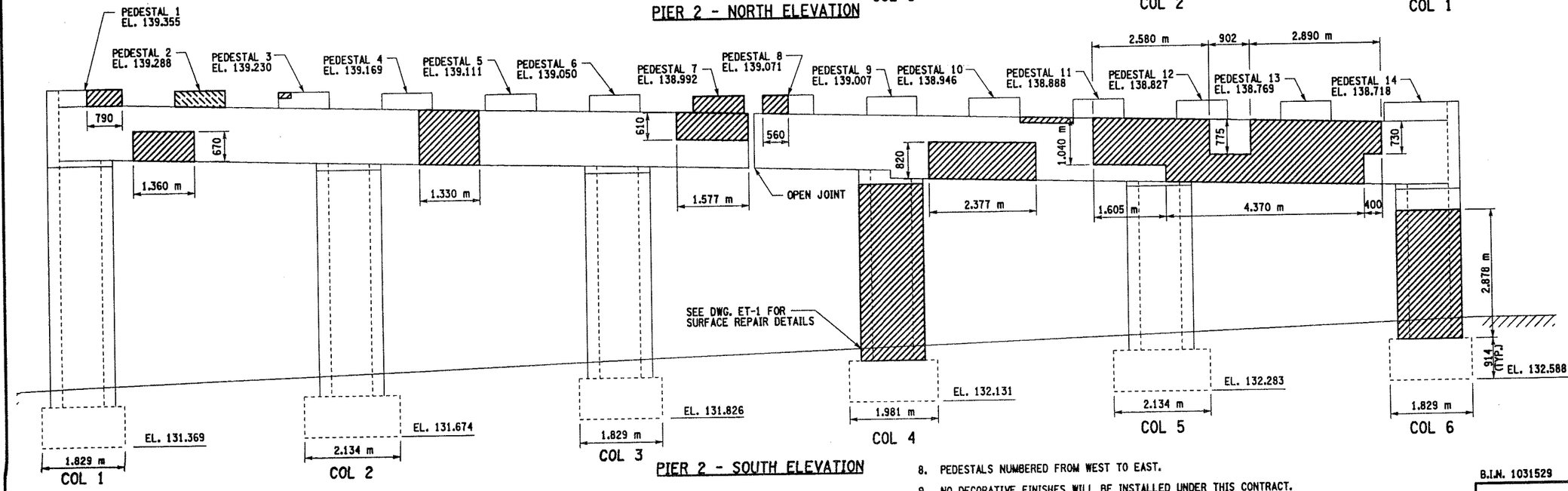

PIER 2 - SOUTH ELEVATION

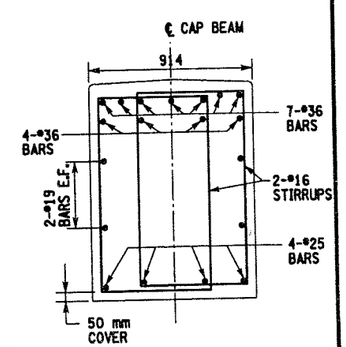

SECTION B-B
NTS

LEGEND:

AREA OF PROPOSED WORK; ITEM 582.05 M REMOVAL OF STRUCTURAL CONCRETE TO AT LEAST 40mm BEHIND REINFORCEMENT- REPLACE WITH CLASS A CONCRETE.

ITEM 580.01 M - REMOVAL OF STRUCTURAL CONCRETE (CM) AND ITEM 555.09 M - CONCRETE FOR STRUCTURES, CLASS HP (CM)

LIST OF ITEMS USED:

ITEM 555.09 M - CONCRETE FOR STRUCTURES, CLASS HP, (CM)

ITEM 11555.8198 M - CRACK REPAIR (3 mm OR WIDER) BY INJECTION OF PORTLAND CEMENT GROUT, (M)

ITEM 18559.1696 M - PROTECTIVE SEALING OF STRUCTURAL CONCRETE, (SM)

ITEM 15565.4302 M - BRIDGE BEARING RESTORATION (EA)

ITEM 580.01 M - REMOVAL OF STRUCTURAL CONCRETE, (CM)

ITEM 582.05 M - REMOVAL OF STRUCTURAL CONCRETE REPLACEMENT WITH CLASS A CONCRETE, (CM)

ITEM 585.01 M - STRUCTURAL LIFTING OPERATIONS - TYPE A (LIFTING FROM PIER SEAT)

ITEM 585.03 M - STRUCTURAL LIFTING OPERATIONS - TYPE C (LIFTING FROM FOOTING)

NOTES:

1. ALL DIMENSIONS SHOWN FOR CONCRETE REMOVAL ARE APPROXIMATE AND SHALL BE FIELD VERIFIED BY THE CONTRACTOR AND EIC.
2. ALL DIMENSIONS SHOWN FOR EXISTING PIER ARE APPROXIMATE AND SHALL BE FIELD VERIFIED BY THE CONTRACTOR AND EIC.
3. CONCRETE REMOVAL TO LIMITS SHOWN INCLUDES SOUND CONCRETE AROUND THE PERIMETER OF THE DETERIORATED CONCRETE, A.O.B.E.
4. WHEN REMOVING EXISTING CONCRETE, SAWCUT 5 mm MIN. TO PRODUCE NEAT REMOVAL LINES. ANY COST TO BE INCLUDED IN THE BID PRICE FOR ITEM 582.05 M.
5. ELEVATIONS ARE GIVEN FOR REFERENCE ONLY.
6. FOR REMOVAL DETAILS SEE DWG. BR-1.
7. RESTORE TO ORIGINAL DIMENSIONS.
8. PEDESTALS NUMBERED FROM WEST TO EAST.
9. NO DECORATIVE FINISHES WILL BE INSTALLED UNDER THIS CONTRACT.
10. REFER TO CONTRACT F.I.C. 65-28 FOR ORIGINAL CONSTRUCTION DETAILS.
11. SEE DRAWING BR-2 FOR DETAILS FOR PLACEMENT OF GALVANIC ANODES IN PEDESTAL AREAS.
12. STRUCTURAL LIFTING OPERATIONS FOR BEARING RESTORATION (ITEM 585.01 M - TYPE A LIFTING FROM PIER SEAT) SEE DWG. NO. TSL-1.
13. PERFORM LOW FIXED BEARING RESTORATION TO BEARINGS 1 - 16 (ITEM 15565.4302 M) SEE DWG. NO. BR-5.
14. STRUCTURAL LIFTING OPERATIONS FOR CONCRETE RESTORATION (ITEM 585.03 M - TYPE C LIFTING FROM FOOTING) SEE DWG. NO. TSL-1.
15. PERFORM LOW EXPANSION BEARING RESTORATION TO BEARINGS 1 - 16 (ITEM 15565.4302 M) SEE DWG. NO. BR-5.

0.5 0 1 2 3 m

SPECIAL NOTE: ALL DIMENSIONS ARE SHOWN IN MILLIMETERS UNLESS OTHERWISE NOTED

B.I.N. 1031529

AS BUILT REVISIONS

SIGNATURE DATE

INTERSTATE 81
OVER
E. CALTHROP AVE.

PIER 2 (1 OF 2)

STATE OF NEW YORK
DEPARTMENT OF TRANSPORTATION

Stantec

FILENAME	REGION	DATE	DRAWING NO.
380466CB_P2A	3	OCT. 2004	ST3-5

DESIGN SUPERVISOR RON NORTHROP JOB MANAGER RON NORTHROP ESTIMATED BY LOWELL LINGO DRAFTED BY RJ LAMPHEAR CHECKED BY LOWELL LINGO DESIGNED BY LOWELL LINGO CHECKED BY

FED ROAD REG. NO.	STATE	CONTRACT NO.	SHEET NO.	TOTAL SHEETS
1	N.Y.	D259742	542	788

INTERSTATE ROUTE 505 ONONDAGA INTERCHANGE
BRIDGE REHABILITATION PROJECT (ELEMENT SPECIFIC)
VARIOUS BRIDGES ON INTERSTATES 81 & 690
CITY OF SYRACUSE
ONONDAGA COUNTY
P.I.N. 3804.66 B.I.N. 1031529

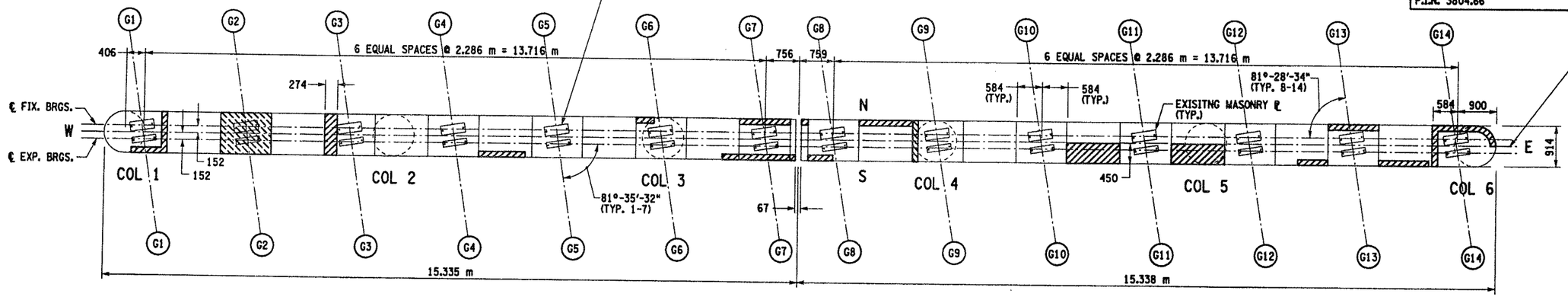

PIER 1 - TOP OF CAP BEAM PLAN

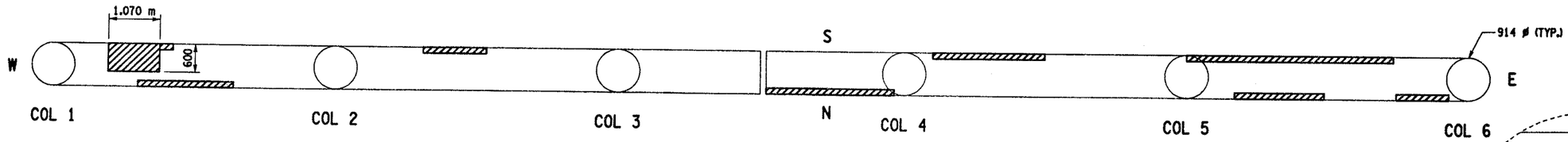

PIER 1 - UNDERSIDE OF CAP BEAM PLAN

PEDESTAL 1 RIGHT FACE

PEDESTAL 9 LEFT FACE

PEDESTAL 14 LEFT FACE

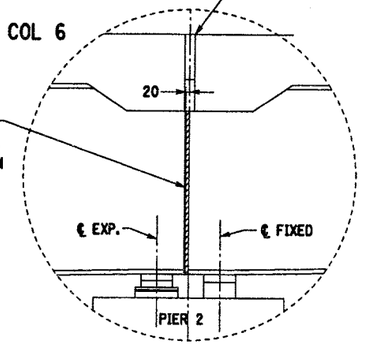

GIRDER REMOVAL DETAIL
NTS

LIST OF ITEMS USED:

ITEM 02520.20 M - SAWCUTTING BRIDGE JOINTS, (M)

ITEM 555.09 M - CONCRETE FOR STRUCTURES, CLASS HP, (CM)

ITEM 11555.8198 M - CRACK REPAIR (3 mm OR WIDER) BY INJECTION OF PORTLAND CEMENT GROUT, (M)

ITEM 18559.1696 M - PROTECTIVE SEALING OF STRUCTURAL CONCRETE, (SM)

ITEM 15565.4302 M - BRIDGE BEARING RESTORATION, (EA)

ITEM 16570.32 M - LOCALIZED PAINTING OF BARE STRUCTURAL STEEL, (SM)

ITEM 580.01 M - REMOVAL OF STRUCTURAL CONCRETE, (CM)

ITEM 582.05 M - REMOVAL OF STRUCTURAL CONCRETE REPLACEMENT WITH CLASS A CONCRETE, (CM)

ITEM 585.01 M - STRUCTURAL LIFTING OPERATIONS - TYPE A (LIFTING FROM PIER SEAT)

ITEM 585.03 M - STRUCTURAL LIFTING OPERATIONS - TYPE C (LIFTING FROM FOOTING)

ITEM 589.520003 M - REMOVAL OF EXISTING STEEL, (EA)

LEGEND:

AREA OF PROPOSED WORK; ITEM 582.05 M REMOVAL OF STRUCTURAL CONCRETE TO AT LEAST 40mm BEHIND REINFORCEMENT- REPLACE WITH CLASS A CONCRETE.

ITEM 580.01 M - REMOVAL OF STRUCTURAL CONCRETE (CM) AND ITEM 555.09 M - CONCRETE FOR STRUCTURES, CLASS HP (CM)

TABLE - ITEM 582.05 M	
ELEMENT	QUANTITY (CM)
PEDESTAL	0.5
PIER	5.7

TABLE OF STRUCTURAL LIFTING

LOCATION	ITEM	QTY (EA)	DL (KN)	LL+I (KN)	TOTAL (KN)
PED. 1-7 EXP.	585.01 M	7	198	359	557
PED. 1-7 FIX.	585.01 M	7	125	335	460
PED. 8-14 EXP.	585.03 M	7	198	359	557
PED. 8-14 FIX.	585.03 M	7	125	335	460

TABLE - ITEM 555.09 M	
ELEMENT	QUANTITY (CM)
PEDESTAL	0.4

TABLE - ITEM 11555.8198 M	
ELEMENT	QUANTITY (SM)
PIER	14.5

0.5 0 1 2 3 m

Stantec

B.I.N. 1031529

SPECIAL NOTE: ALL DIMENSIONS ARE SHOWN IN MILLIMETERS UNLESS OTHERWISE NOTED

AS BUILT REVISIONS

SIGNATURE DATE

INTERSTATE 81
OVER
E. CALTHROP AVE.
PIER 2 (2 OF 2)

STATE OF NEW YORK
DEPARTMENT OF TRANSPORTATION

FILENAME	REGION	DATE	DRAWING NO.
380466CB_P2B	3	OCT. 2004	ST3-6

FED ROAD REG. NO.	STATE	CONTRACT NO.	SHEET NO.	TOTAL SHEETS
1	N.Y.	D259742	543	788

INTERSTATE ROUTE 505 ONONDAGA INTERCHANGE
BRIDGE REHABILITATION PROJECT (ELEMENT SPECIFIC)
VARIOUS BRIDGES ON INTERSTATES 81 & 690
CITY OF SYRACUSE
ONONDAGA COUNTY
P.I.N. 3804.66 | B.I.N. 1031529

DESIGN SUPERVISOR RON NORTHROP ESTIMATED BY LOWELL LINGO DRAFTED BY RJ LAMPHEAR CHECKED BY LOWELL LINGO
JOB MANAGER RON NORTHROP DESIGNED BY RON NORTHROP CHECKED BY LOWELL LINGO

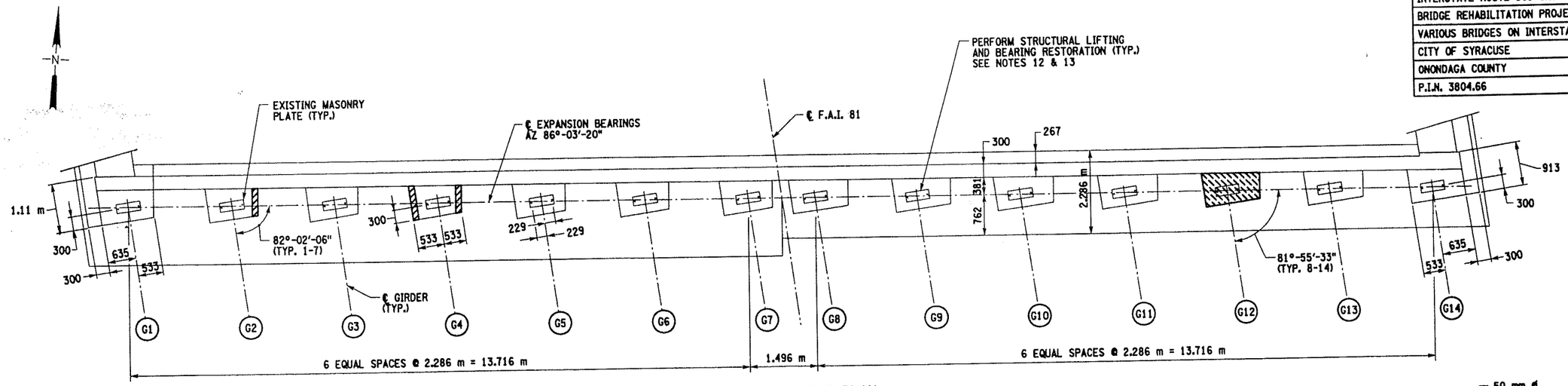

NORTH ABUTMENT PLAN

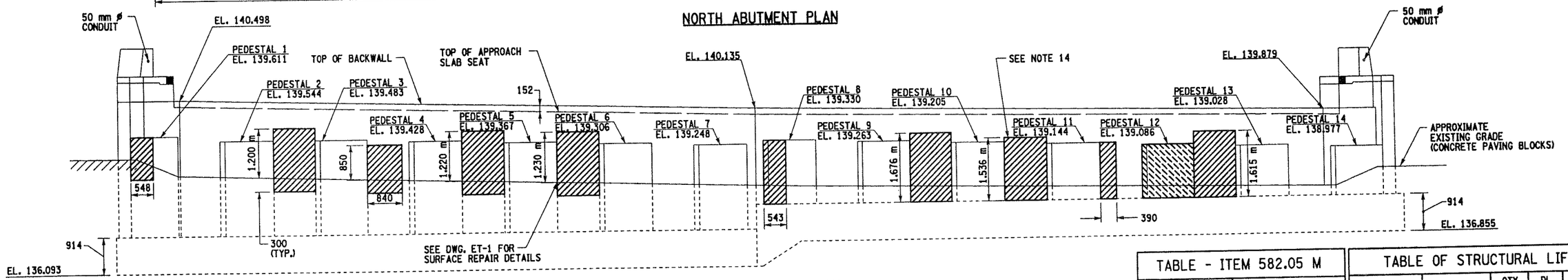

NORTH ABUTMENT - ELEVATION

TABLE - ITEM 11555.8198 M	
ELEMENT	QUANTITY (M)
PIER	2.6

TABLE - ITEM 582.05 M	
ELEMENT	QUANTITY (CM)
PEDESTAL	0.4
ABUTMENT	0.0
BACKWALL	1.4

TABLE OF STRUCTURAL LIFTING					
LOCATION	ITEM	QTY (EA)	DL (KN)	LL+I (KN)	TOTAL (KN)
PED. 1-14 EXP.	585.02 M	14	125	335	460

TABLE - ITEM 555.09 M	
ELEMENT	QUANTITY (CM)
PEDESTAL	1.2

LIST OF ITEMS USED:

ITEM 555.09 M - CONCRETE FOR STRUCTURES, CLASS HP, (CM)

ITEM 11555.8198 M - CRACK REPAIR (3 mm OR WIDER) BY INJECTION OF PORTLAND CEMENT GROUT, (M)

ITEM 18559.1696 M - PROTECTIVE SEALING OF STRUCTURAL CONCRETE, (SM)

ITEM 15565.4302 M - BRIDGE BEARING RESTORATION (EA)

ITEM 580.01 M - REMOVAL OF STRUCTURAL CONCRETE, (CM)

ITEM 582.05 M - REMOVAL OF STRUCTURAL CONCRETE REPLACEMENT WITH CLASS A CONCRETE, (CM)

ITEM 585.02 M - STRUCTURAL LIFTING OPERATIONS - TYPE B (LIFTING FROM ABUTMENT SEAT)

ITEM 10564.11 M - REMOVE, STORE AND RESET DIAPHRAGMS OF STRUCTURE, (EA)

LEGEND:

AREA OF PROPOSED WORK; ITEM 582.05 M REMOVAL OF STRUCTURAL CONCRETE TO AT LEAST 40 mm BEHIND REINFORCEMENT- REPLACE WITH CLASS A CONCRETE.

ITEM 580.01 M - REMOVAL OF STRUCTURAL CONCRETE (CM) AND ITEM 555.09 M - CONCRETE FOR STRUCTURES, CLASS HP (CM)

PED. 2 RIGHT FACE | PED. 4 LEFT FACE | PED. 4 RIGHT FACE | PED. 11 RIGHT FACE

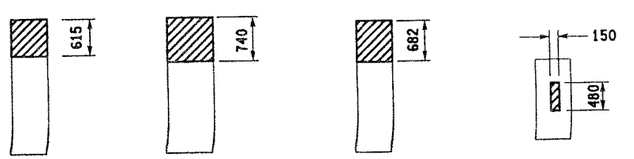

PEDESTAL ELEVATIONS

NOTES:

1. ALL DIMENSIONS SHOWN FOR CONCRETE REMOVAL ARE APPROXIMATE AND SHALL BE FIELD VERIFIED BY THE CONTRACTOR AND EIC.
2. ALL DIMENSIONS SHOWN FOR EXISTING ABUTMENT ARE APPROXIMATE AND SHALL BE FIELD VERIFIED BY THE CONTRACTOR AND EIC.
3. CONCRETE REMOVAL TO LIMITS SHOWN INCLUDES SOUND CONCRETE AROUND THE PERIMETER OF THE DETERIORATED CONCRETE, A.O.B.E.
4. WHEN REMOVING EXISTING CONCRETE, SAWCUT 5 mm MIN. TO PRODUCE NEAT REMOVAL LINES. ANY COST TO BE INCLUDED IN THE BID PRICE FOR ITEM 582.05 M.
5. ELEVATIONS ARE GIVEN FOR REFERENCE ONLY.
6. FOR REMOVAL DETAILS SEE DWG. BR-1.
7. RESTORE TO ORIGINAL DIMENSIONS.
8. PEDESTALS NUMBERED FROM WEST TO EAST.
9. NO DECORATIVE FINISHES WILL BE INSTALLED UNDER THIS CONTRACT.
10. REFER TO CONTRACT F.I.C. 65-28 FOR ORIGINAL CONSTRUCTION DETAILS.
11. SEE DRAWING BR-2 FOR DETAILS FOR PLACEMENT OF GALVANIC ANODES IN PEDESTAL AREAS.
12. STRUCTURAL LIFTING OPERATIONS FOR BEARING RESTORATION (ITEM 585.02 M - TYPE B LIFTING FROM ABUTMENT SEAT) SEE DWG. NO. TSL-1.
13. PERFORM LOW EXPANSION BEARING RESTORATION TO BEARINGS 1 - 14 (ITEM 15565.4302 M) SEE DWG. NO. BR-5.
14. THE CONTRACTOR SHALL REMOVE AND REINSTALL THE END DIAPHRAGM FOR ACCESS TO THIS REPAIR AREA LOCATED ON THE BACKWALL. TO BE PAID UNDER ITEM 10564.11 M.

0.5 0 1 2 3 m

Stantec

SPECIAL NOTE: ALL DIMENSIONS ARE SHOWN IN MILLIMETERS UNLESS OTHERWISE NOTED

B.I.N. 1031529

AS BUILT REVISIONS

SIGNATURE DATE

INTERSTATE 81
OVER
E. CALTHROP AVE.

NORTH ABUTMENT

STATE OF NEW YORK
DEPARTMENT OF TRANSPORTATION

FILENAME	REGION	DATE	DRAWING NO.
380466CB_A1B	3	OCT. 2004	ST3-7

BD 186 (1)

BRIDGE INSPECT AND CONDITION REPORT

SHEET ___ OF ___

BIN 1031529

FEATURE CARRIED: I81 NB & SB

FEATURE CROSSED: Calthrop Ave

INSPECTED BY ___ TITLE ___ DATE 3/19/85

Category E' Weld Locations

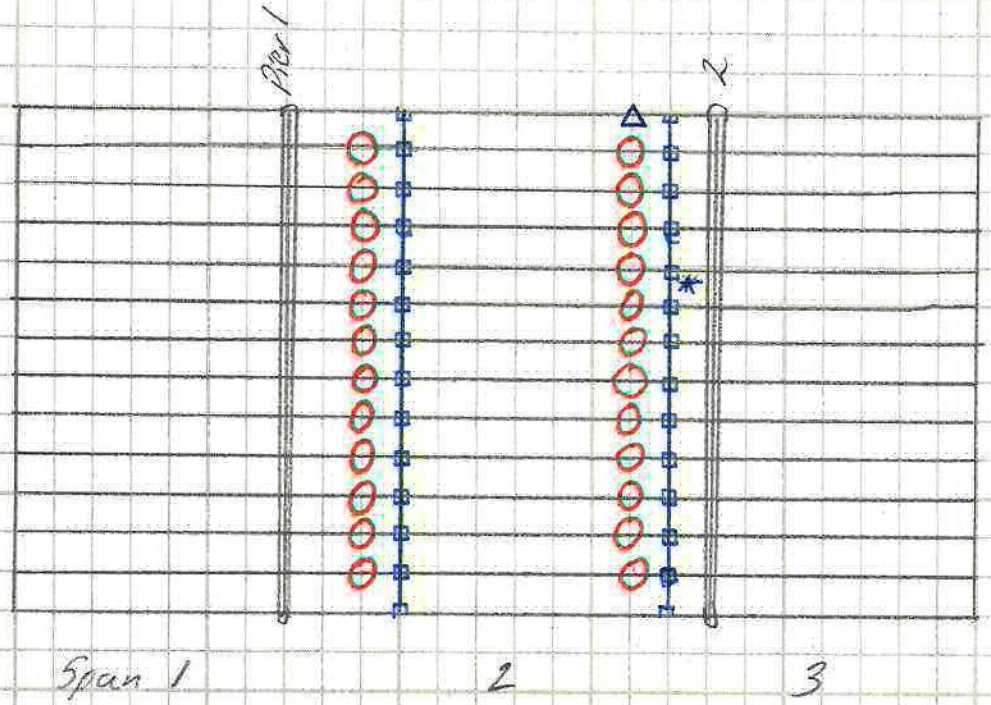

□ - 3½" D WELD LOCATIONS (* NOTE: END SPAN 2, BAY 5 at G5 IS A 7" CATEGORY E WELD)
↑ (SEE PHOTO 1)

△ 4" D WELD LOCATION AT UTILITY JUNCTION BOX CONNECTION TO FASCIA GIRDER WEB (SEE PHOTO 2)

BIN: 1031529
I81 / E. CALTHROP AVENUE

PIER 1 DETERIORATION SKETCH

NOT TO SCALE

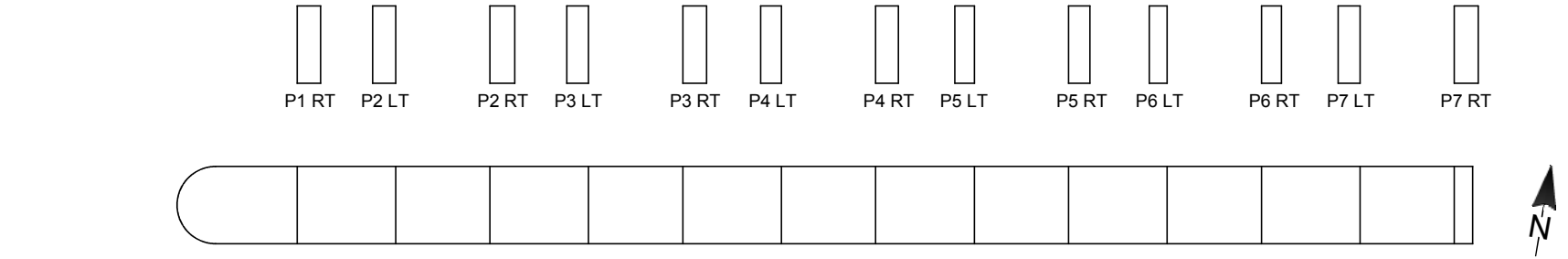

PLAN

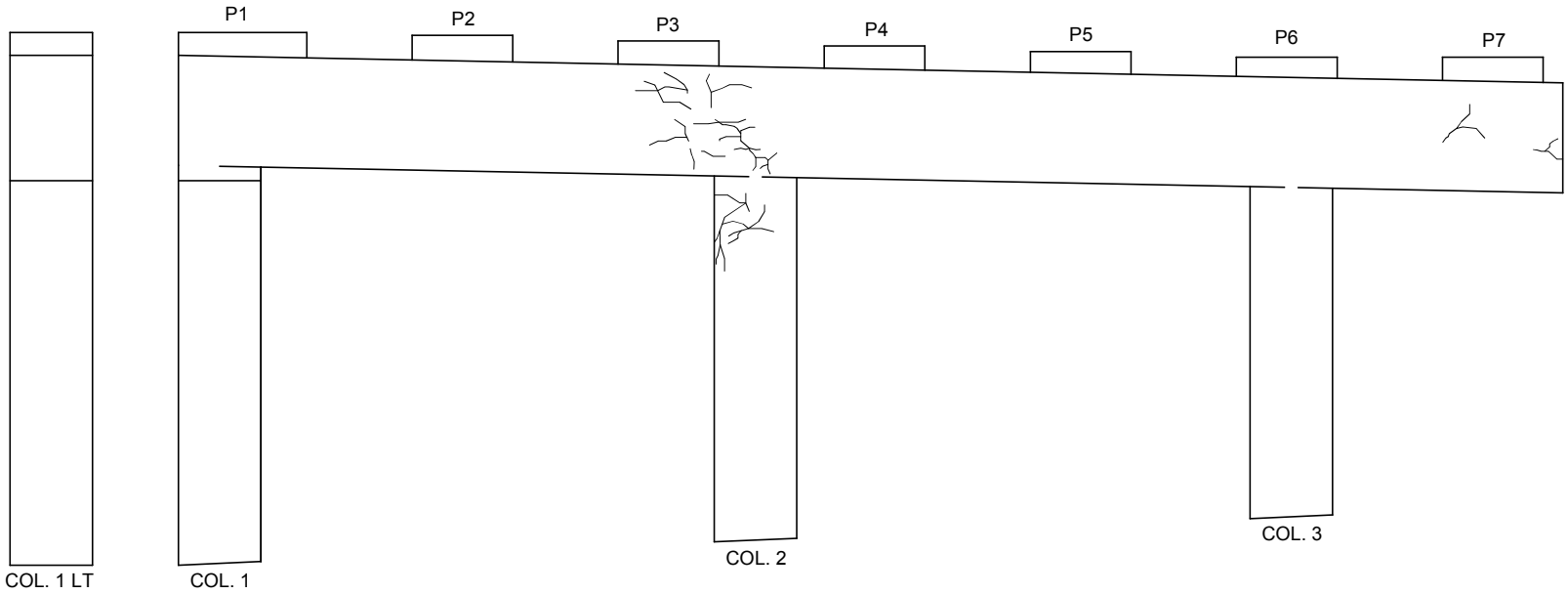

PIER 1 BEGIN LEFT ELEVATION

LEGEND

- Hollow Concrete
- Spall
- Crack
- Hairline Crack

BIN: 1031529
I81 / E. CALTHROP AVENUE

PIER 1 DETERIORATION SKETCH

NOT TO SCALE

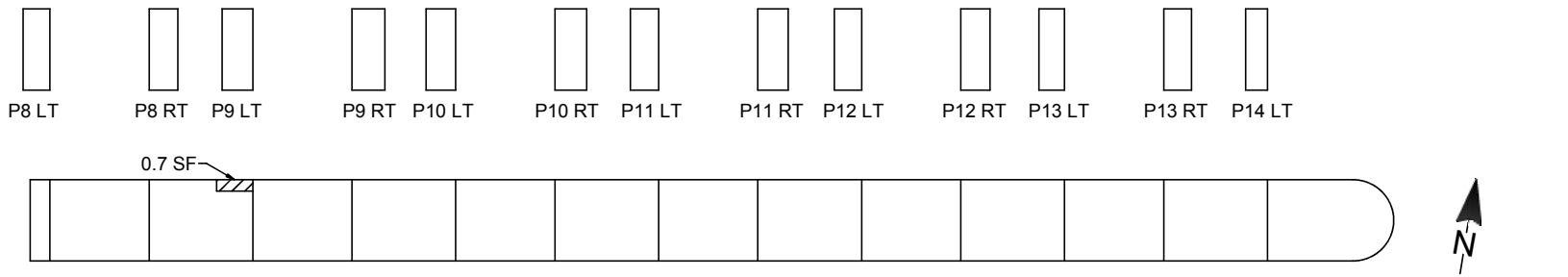

PLAN

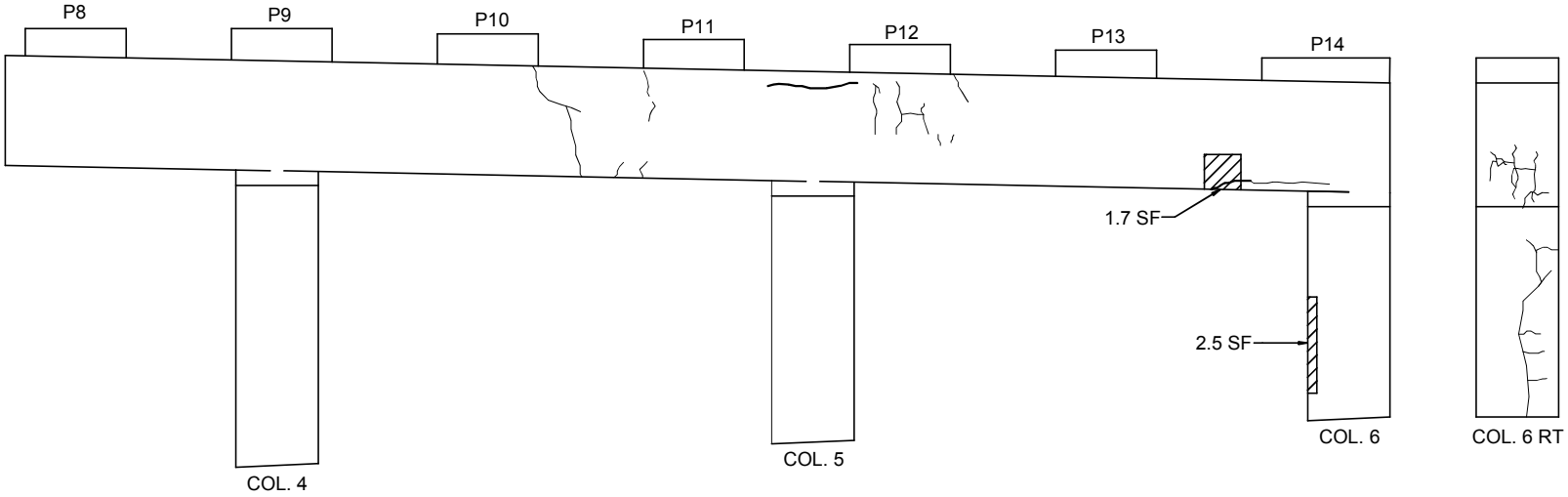

PIER 1 BEGIN RIGHT ELEVATION

LEGEND

- Hollow Concrete
- Spall
- Crack
- Hairline Crack

BIN: 1031529
I81 / E. CALTHROP AVENUE

PIER 1 DETERIORATION SKETCH

NOT TO SCALE

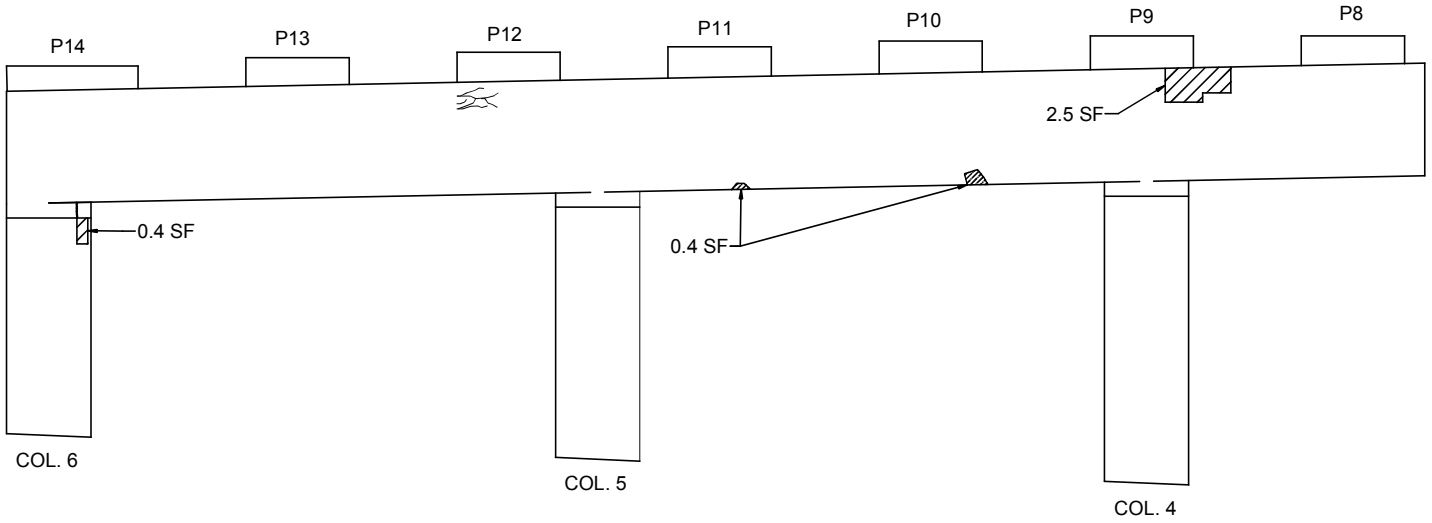

PIER 1 END RIGHT ELEVATION

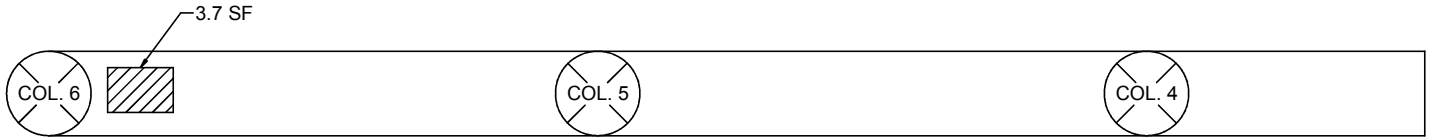

UNDERSIDE OF CAPBEAM

LEGEND
Hollow Concrete
Spall
Crack
Hairline Crack

BIN: 1031529
I81 / E. CALTHROP AVENUE

PIER 1 DETERIORATION SKETCH

NOT TO SCALE

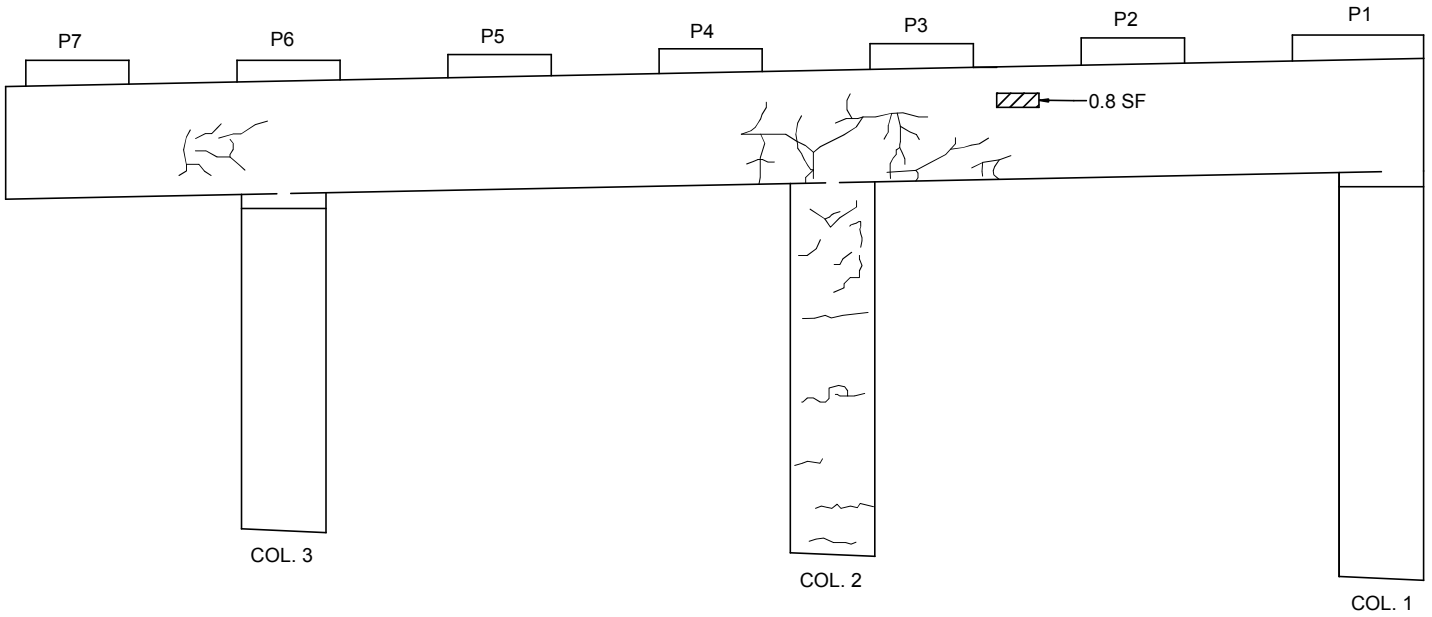

PIER 1 END LEFT ELEVATION



UNDERSIDE OF CAPBEAM

LEGEND

- Hollow Concrete
- Spall
- Crack
- Hairline Crack

BIN: 1031529
I81 / E. CALTHROP AVENUE

PIER 2 DETERIORATION SKETCH

NOT TO SCALE

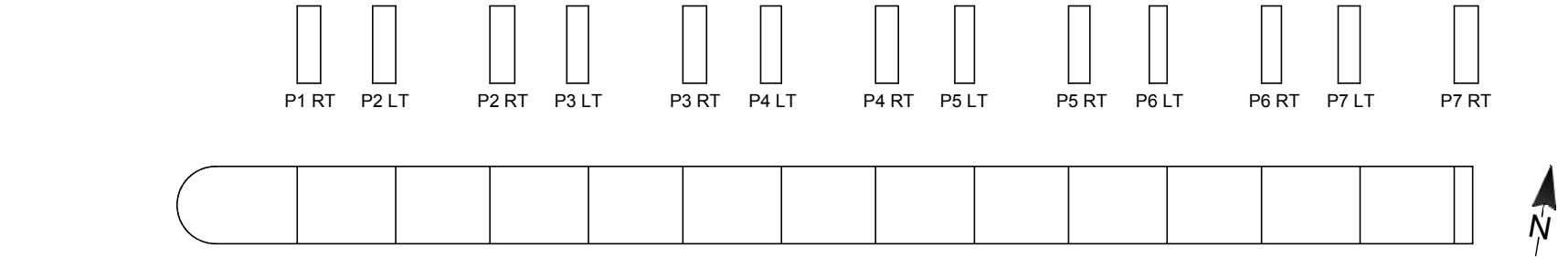

PLAN

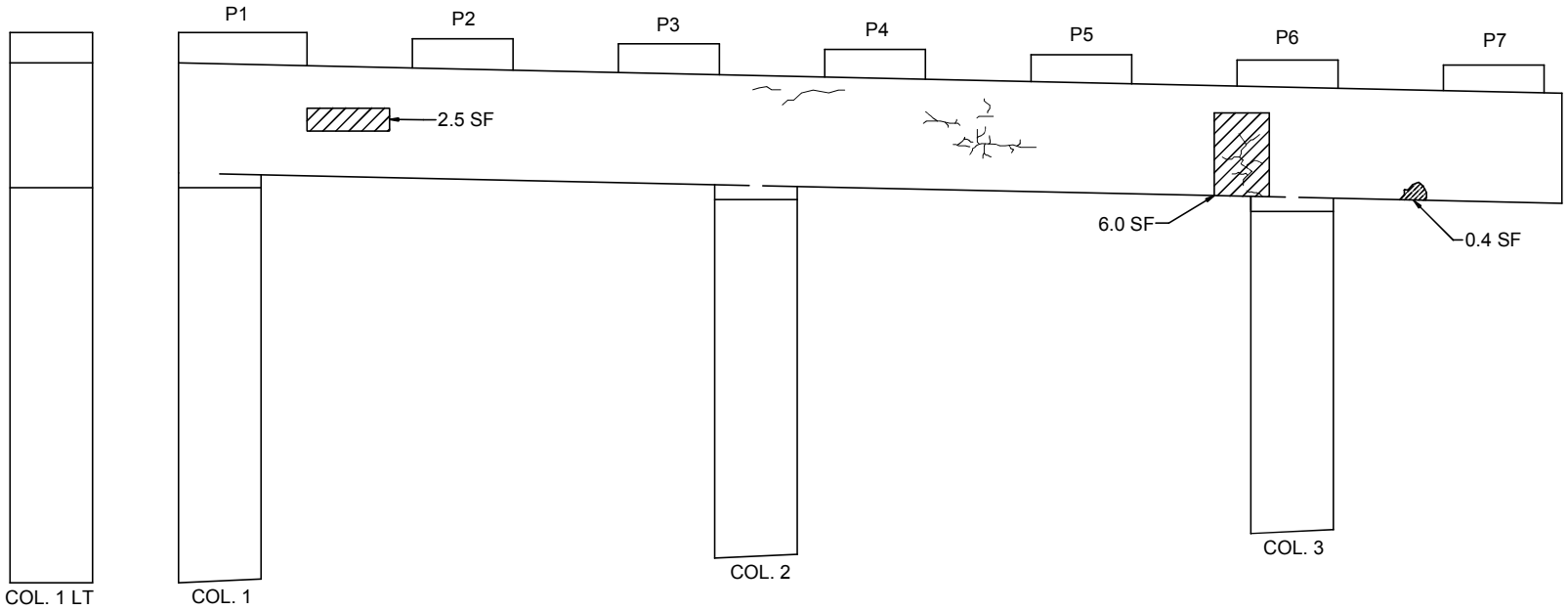

PIER 2 BEGIN LEFT ELEVATION

LEGEND

- Hollow Concrete
- Spall
- Crack
- Hairline Crack

BIN: 1031529
I81 / E. CALTHROP AVENUE

PIER 2 DETERIORATION SKETCH

NOT TO SCALE

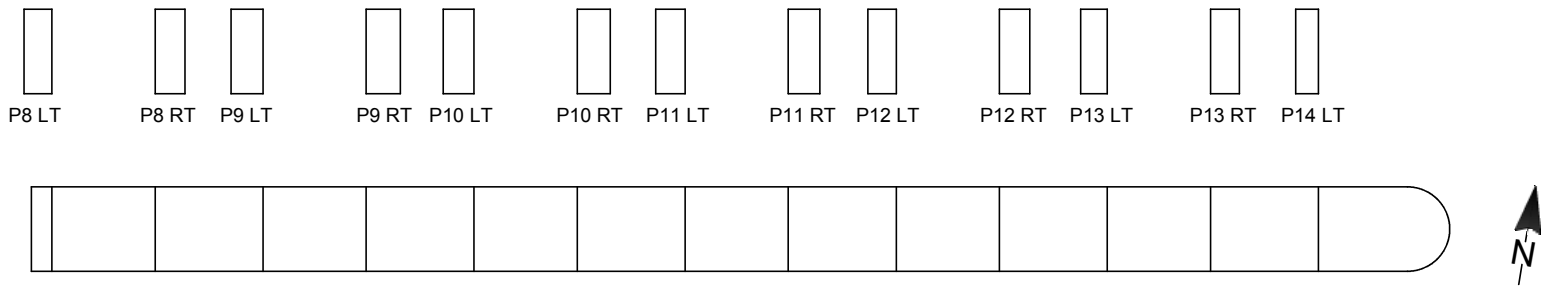

PLAN

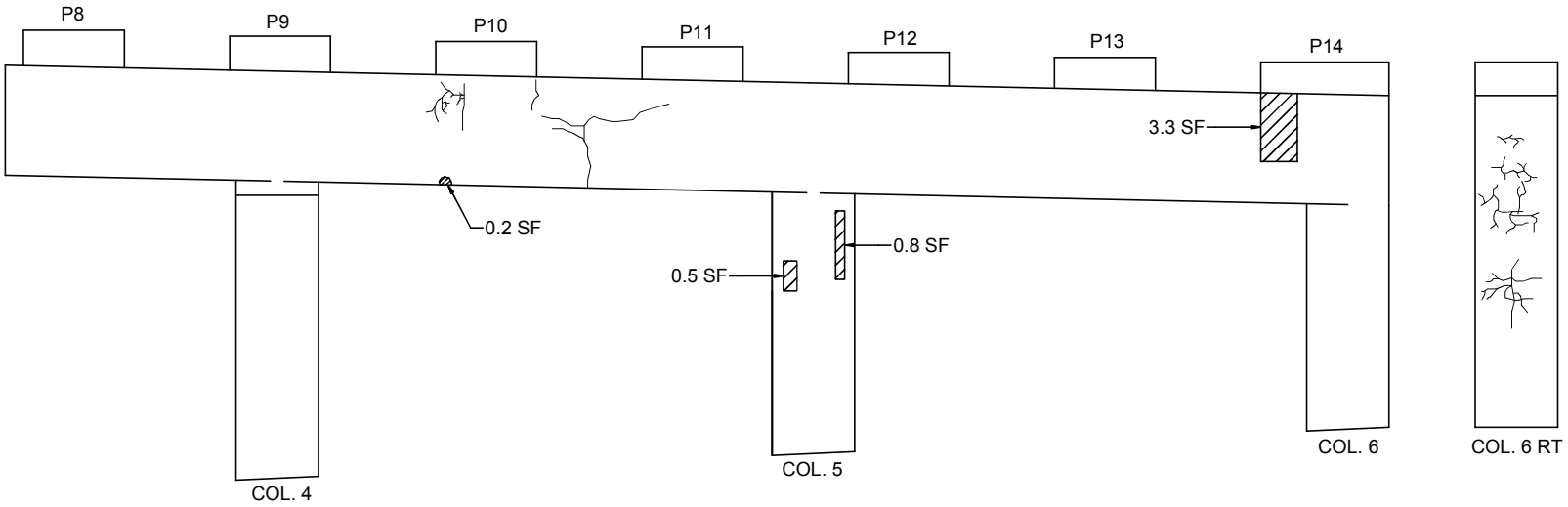

PIER 2 BEGIN RIGHT ELEVATION

LEGEND

- Hollow Concrete
- Spall
- Crack
- Hairline Crack

BIN: 1031529
I81 / E. CALTHROP AVENUE

PIER 2 DETERIORATION SKETCH

NOT TO SCALE

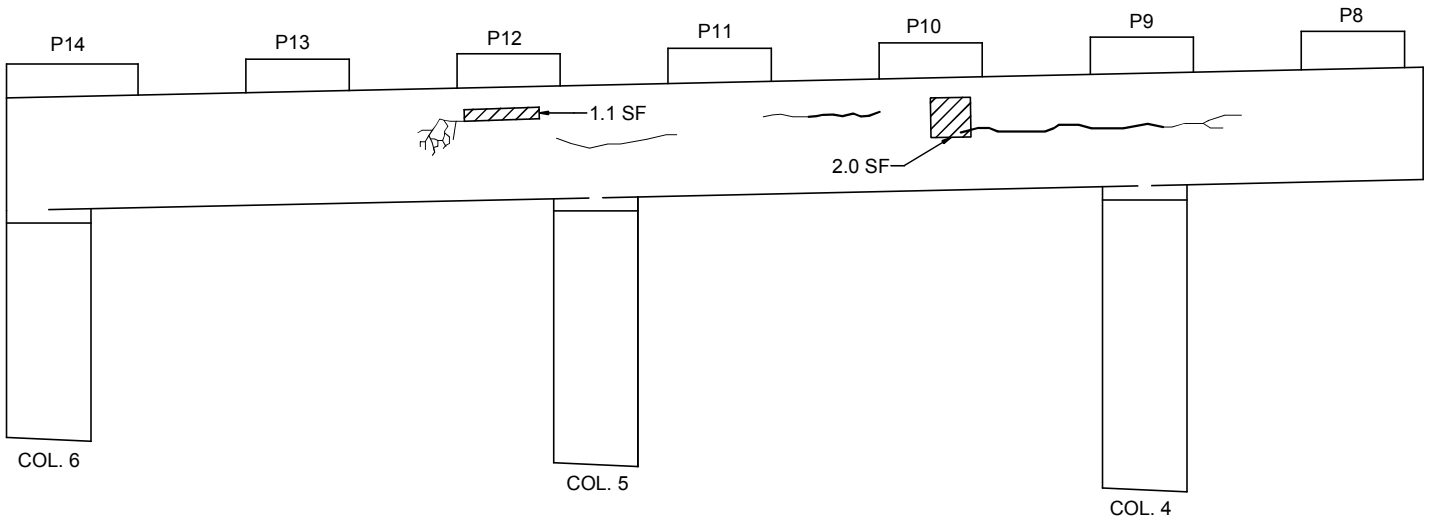

PIER 2 END RIGHT ELEVATION



UNDERSIDE OF CAPBEAM

LEGEND

- Hollow Concrete
- Spall
- Crack
- Hairline Crack

BIN: 1031529
I81 / E. CALTHROP AVENUE

PIER 2 DETERIORATION SKETCH

NOT TO SCALE

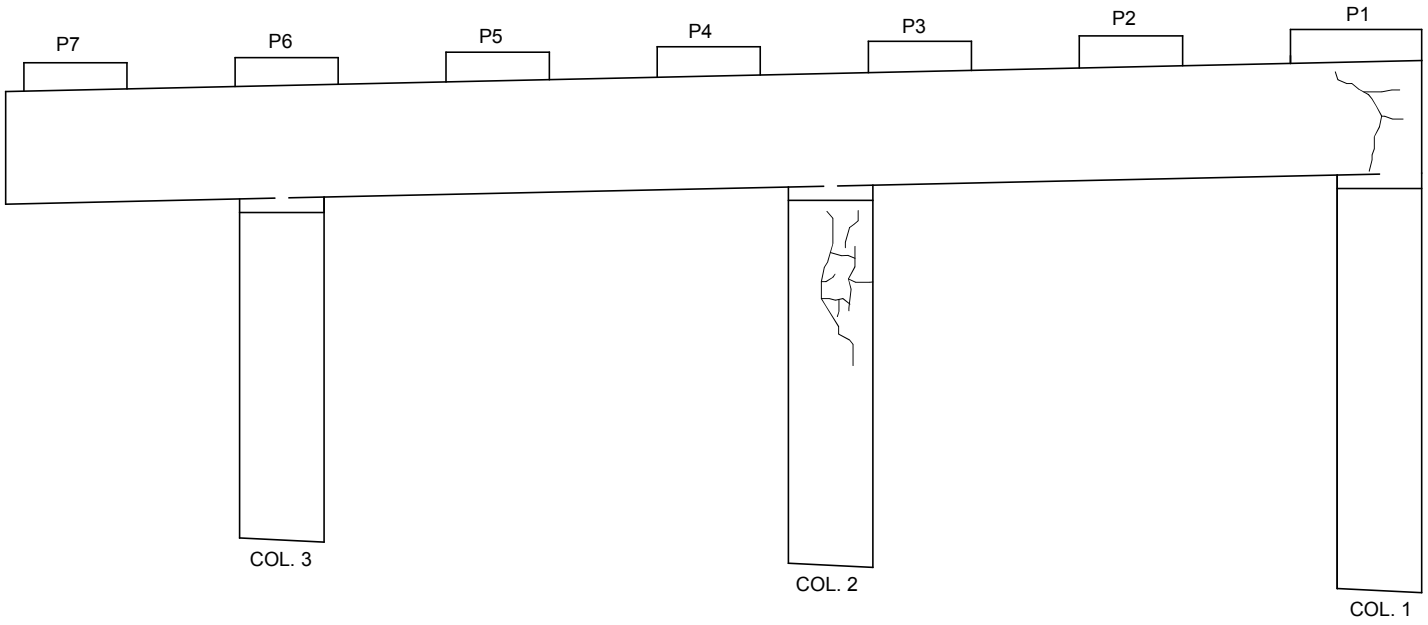

PIER 2 END LEFT ELEVATION



UNDERSIDE OF CAPBEAM

LEGEND

- Hollow Concrete
- Spall
- Crack
- Hairline Crack

IN-DEPTH PHOTO DOCUMENTATION

BIN: 1031529
I81 / E. CALTHROP AVENUE

DECK DETERIORATION PLAN

NOT TO SCALE

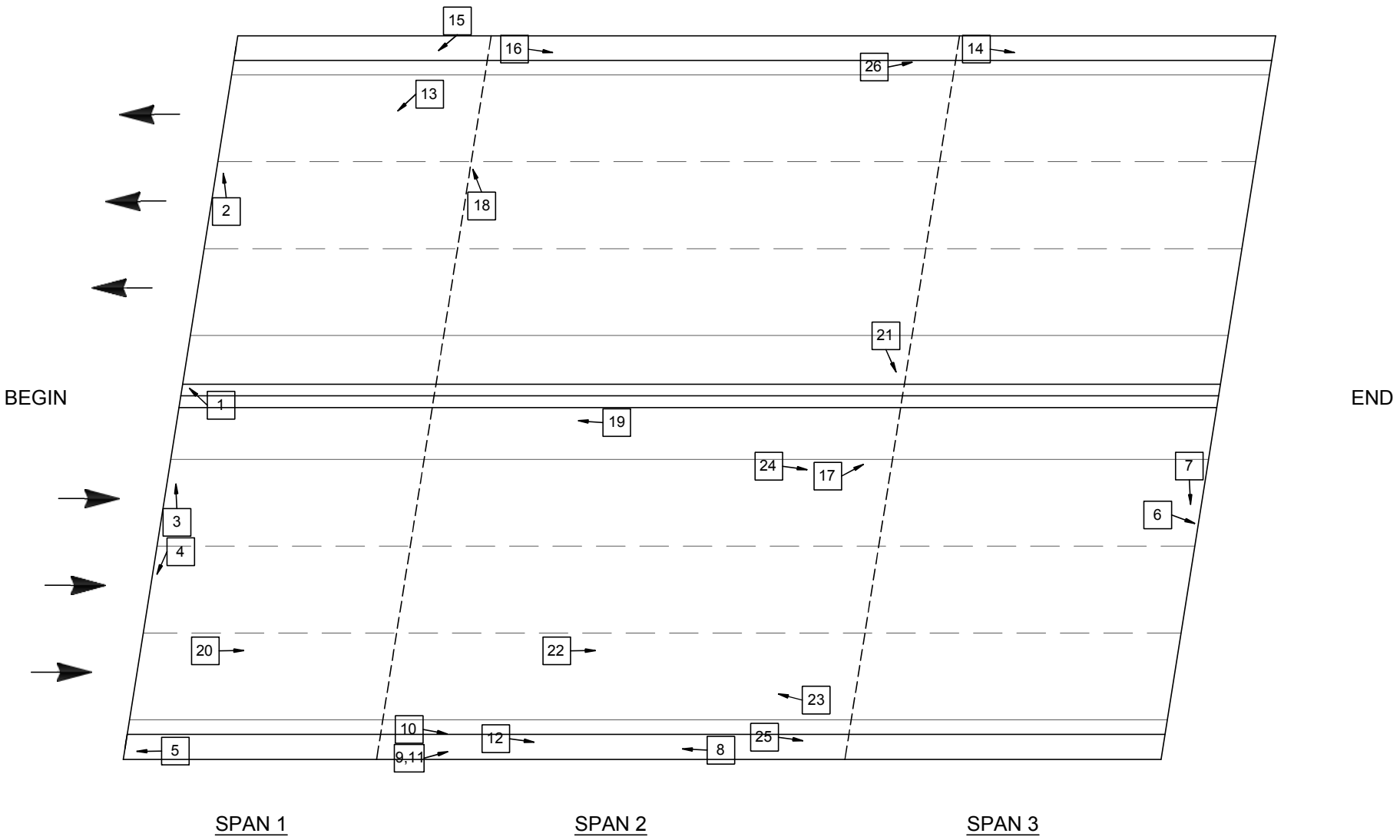

In-Depth Inspection Photos

I81 over E. Calthrop Ave., BIN 1031529



DESCRIPTION: BEGIN BEARING 7 RIGHT

PHOTO 1



DESCRIPTION: BEGIN PEDESTAL 3 RIGHT

PHOTO 2



DESCRIPTION: BEGIN PEDESTAL 9 RIGHT

PHOTO 3



DESCRIPTION: BEGIN PEDESTAL 11 LEFT

PHOTO 4

In-Depth Inspection Photos

I81 over E. Calthrop Ave., BIN 1031529



DESCRIPTION: BEGIN BACKWALL RIGHT

PHOTO 5



DESCRIPTION: END BEARING 10

PHOTO 6

In-Depth Inspection Photos

I81 over E. Calthrop Ave., BIN 1031529

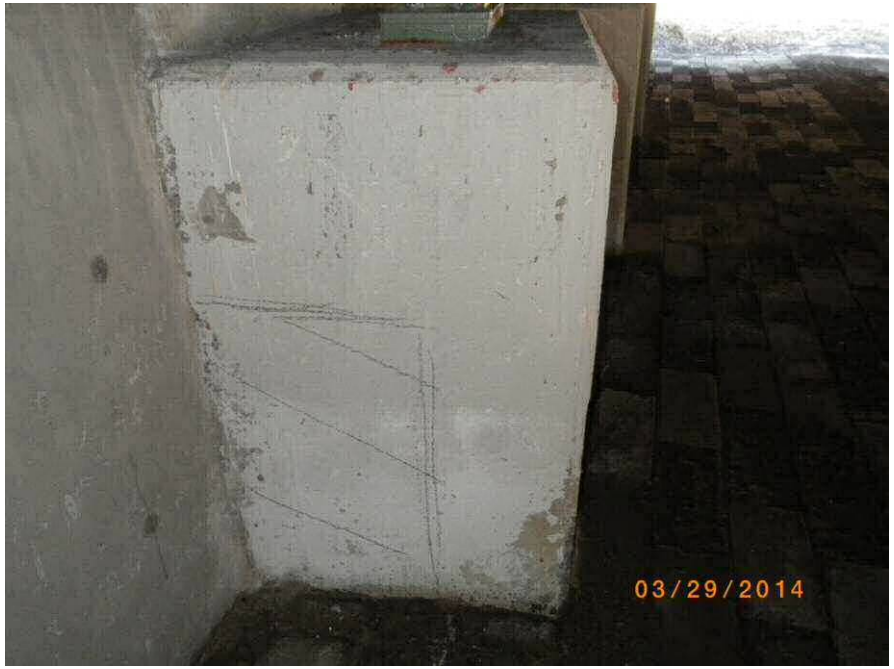

DESCRIPTION: END PEDESTAL 10 LEFT

PHOTO 7



DESCRIPTION: SPAN 2 GIRDER 14 (E-B)

PHOTO 8



DESCRIPTION: SPAN 2 GIRDER 14 (B-E)

PHOTO 9



DESCRIPTION: SPAN 2 GIRDER 14 (B-E)

PHOTO 10

In-Depth Inspection Photos

I81 over E. Calthrop Ave., BIN 1031529



DESCRIPTION: SPAN 2 GIRDER 14 (B-E)

PHOTO 11



DESCRIPTION: SPAN 2 GIRDER 14 DIAPHRAGM 2

PHOTO 12



DESCRIPTION: SPAN 1 LEFT (E-B)

PHOTO 13



DESCRIPTION: SPAN 3 GIRDER 1 (B-E)

PHOTO 14

In-Depth Inspection Photos

I81 over E. Calthrop Ave., BIN 1031529



DESCRIPTION: SPAN 1 GIRDER 1 FROM END

PHOTO 15

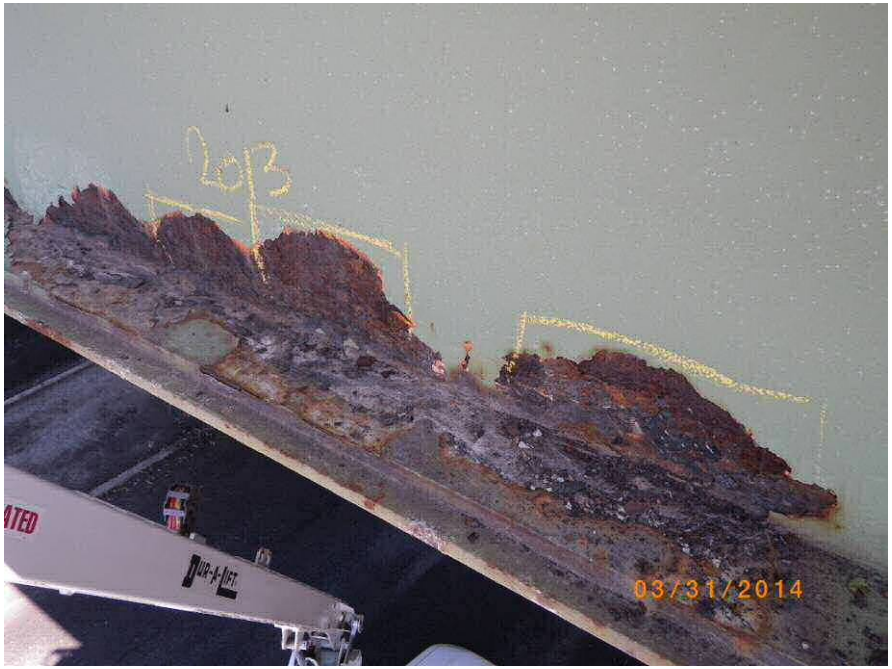

DESCRIPTION: SPAN 2 GIRDER 1 FROM BEGIN

PHOTO 16

In-Depth Inspection Photos

I81 over E. Calthrop Ave., BIN 1031529



DESCRIPTION: PIER 2 BAY 8

PHOTO 17



DESCRIPTION: PIER 1 BEARING 3 RIGHT

PHOTO 18

In-Depth Inspection Photos

I81 over E. Calthrop Ave., BIN 1031529



DESCRIPTION: PIER 1 COLUMNS 3 & 4

PHOTO 19



DESCRIPTION: PIER 1 COLUMNS 5 & 6

PHOTO 20

In-Depth Inspection Photos

I81 over E. Calthrop Ave., BIN 1031529



DESCRIPTION: PIER 2 BEARING 7 BEGIN LEFT

PHOTO 21



DESCRIPTION: PIER 2 COLUMNS 5 & 6

PHOTO 22

In-Depth Inspection Photos

I81 over E. Calthrop Ave., BIN 1031529



DESCRIPTION: SPAN 2 GIRDER 13 NEAR END

PHOTO 23



DESCRIPTION: SPAN 2 GIRDER 9 NEAR END (B-E)

PHOTO 24

In-Depth Inspection Photos

I81 over E. Calthrop Ave., BIN 1031529



DESCRIPTION: SPAN 2 GIRDER 14 NEAR END (B-E)

PHOTO 25



DESCRIPTION: SPAN 2 GIRDER 1 NEAR END (B-E)

PHOTO 26

ASBESTOS SAMPLING SURVEY

Asbestos Sampling Survey

Location:
BIN 1-03152-9
Interstate Route 81 over Calthrop Avenue

Prepared for:
New York State
Department of Transportation

PIN 3804.00.101

LaBella Project No. 97132

May, 1998

Asbestos Sampling Survey

Location:

16 Bridges,
Onondaga County, New York

Prepared for:

New York State
Department of Transportation

PIN 3804.00.101

LaBella Project No. 97132

May, 1998

LaBella Associates, P.C.
300 State Street
Rochester, NY 14614-1098

Table of Contents

Bridge Identification Number and Description — Tab Number

BIN 1-09367-1
Interstate Route 481South Bound over Kirkville Road 1

BIN 1-09367-2
Interstate Route 481North Bound over Kirkville Road 2

BIN 1-09357-1
Interstate Route 481South Bound over Conrail 3

BIN 1-09357-2
Interstate Route 481North Bound over Conrail 4

BIN 1-05115-9
Interstate Route 690 over Peat Street 4

BIN 1-03155-9
Interstate Route 81 over Castle Street 6

BIN 1-03152-9
Interstate Route 81 over Calthrop Avenue 7

BIN 1-05001-0
West Street-Herald Place Ramp over Onondaga Creek 8

BIN 1-05079-0
West Street South Bound over Interstate Route 690 9

BIN 1-05078-0
West Street North Bound over Interstate Route 690 10

BIN 1-05402-0
Interstate Route 690 West Bound over Clinton Street 11

BIN 1-05085-2
Interstate Route 690 East Bound over Franklin Street 12

Table of Contents (continued)

Bridge Identification Number and Description — Tab Number

BIN 1-05095-A

Interstate Route 690 West Bound Ramp over State Street 13

BIN 1-05092-1

Interstate Route 690 West Bound Ramp to Interstate Route 81 North Bound over Willow Street 14

BIN 1-05092-2

Interstate Route 690 West Bound over Willow Street 15

BIN 1-05100-A

Interstate Route 690 East Bound to Interstate Route 81 South Bound over State Street 16

Table of Contents

Page

I. Project Summary 1

II. Site Description 1

III. Inspection Procedures 1

IV. Results 2

Certification 2

Figures and Table

I. Project Summary

In accordance with conditions of Term Agreement D010010, LaBella Associates, P.C. conducted an asbestos sampling survey of the Interstate Route 81 Bridge over Calthrop Avenue. Based on laboratory analyses of bulk samples collected, the following material was determined to contain asbestos:

BIN 1-03152-9 Interstate Route 81 over Calthrop Avenue

Type of Material	Estimated Amount
Caulking Compound	3 Linear Meters

II. Site Description

The Site is located in Onondaga County, New York. For the purpose of this report, the Site consists of the Interstate Route 81 Bridge over Calthrop Avenue (See attached FIGURE 1 - Site Location Map).

III. Inspection Procedures

The following procedures were used to obtain the data for this Report:

A. A review of record drawings supplied by Region 3 personnel and a visual inspection of the subject structure were conducted to identify potential visible/accessible sources of asbestos-containing materials. Observations and notes were made to provide a description of the structure, and an estimate of the approximate amount, length, or area of ACM present.

B. Physical or operational constraints which might affect the removal of the ACM were identified and reported.

C. Bulk samples of suspected ACM were collected during the site inspection of the subject structure. Samples were taken from each homogeneous area that may contain ACM.

D. Samples were submitted for analysis. Preliminary PLM analyses of NOB materials were performed by LaBella Laboratories, a NYSDOH approved laboratory, to determine the presence and percentage of asbestos in each sample. TEM analyses of NOB materials, if necessary, were performed by EMSL Analytical, Inc. or New York Testing Laboratories, Inc.

E. Lab results were used to determine the approximate location, type, and amount of the verified ACM.

F. A drawing of the structure at the Site was created, in order to show sample locations and the approximate locations and amounts of confirmed ACM observed in accessible locations.

Only accessible areas were inspected. Inaccessible areas, such as areas within the bridge or the approaches to the bridge were not included in this inspection. No investigation was conducted by LaBella Associates to determine the presence of underground utilities on or in the immediate vicinity of the Site. Actual sample locations are shown in the attached FIGURE 2. Results of bulk sample analyses are tabulated in the attached TABLE.

IV. Results

BIN 1-03152-9 Interstate Route 81 over Calthrop Avenue

Caulking Compound

Asbestos-containing caulking compound is located in the following areas of the bridge:

- Around a few guide rail base plates (widely scattered)
- Around lighting conduit in expansion joints in parapet walls

The caulking compound around the lighting conduit is only visible in the expansion joints in the west parapet, due to the relatively large gap at these joints. For estimating purposes, this caulking compound is assumed to be located in all the expansion joints on both parapets, even though its presence cannot be visually confirmed.

It is estimated that the total amount of this caulking compound on the bridge is approximately 3 linear meters. This estimate is based on field observations made at the time of the site visit.

The approximate locations of this material are shown in the attached FIGURE 2. Analytical results of bulk samples collected are summarized in the attached TABLE.

Certification

LaBella Associates, P.C. certifies the accuracy of this report, to the best of our knowledge, based on the information collected as described in the Inspection Procedures Section of this investigation.

Figures & Table

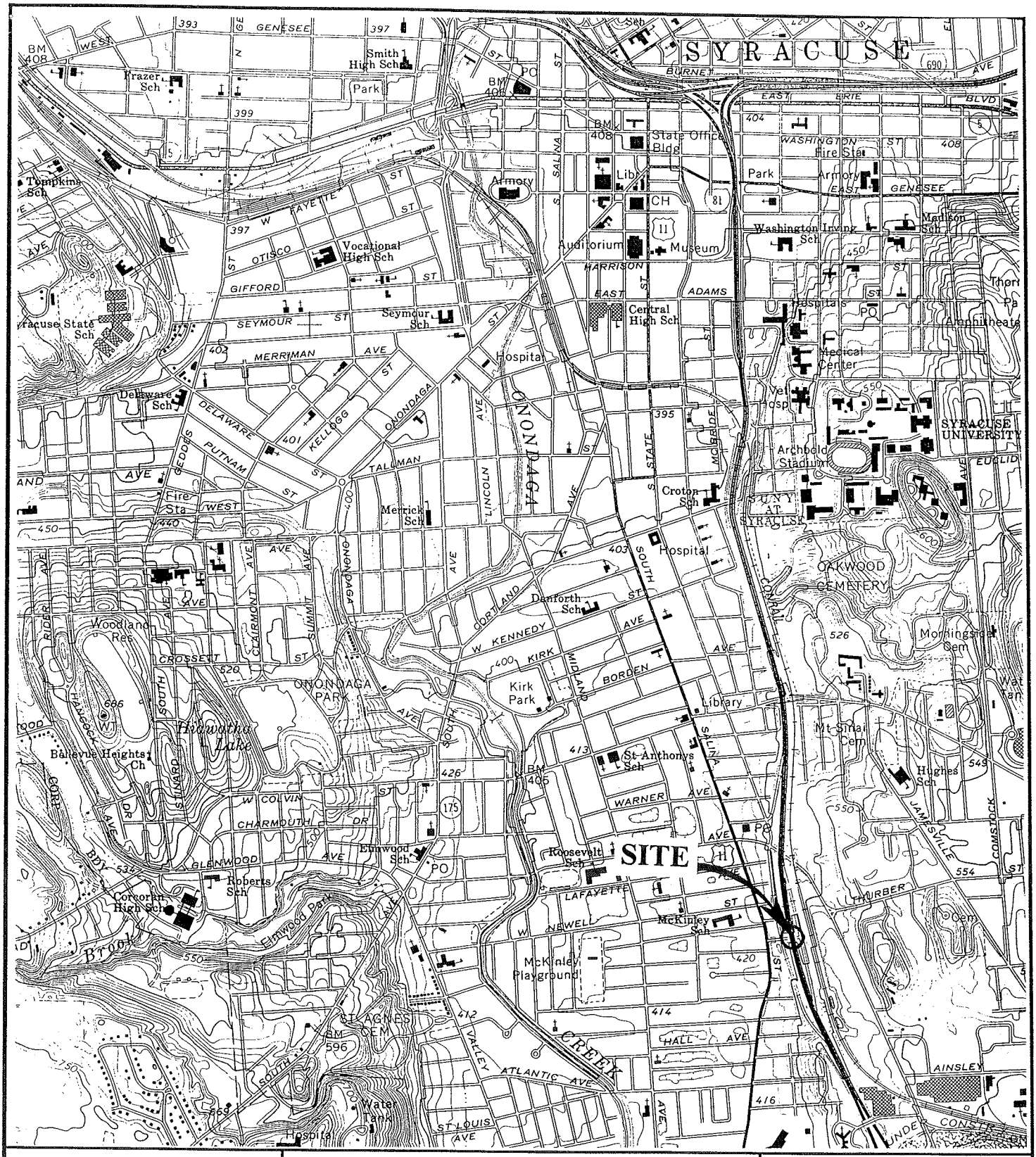

N

SCALE: 1" = 2000'

FIGURE 1
Site Location Map

I-81 OVER
CALTHROP AVENUE

BIN 1-03152-9

LABELLA

PROJECT NO. 97132

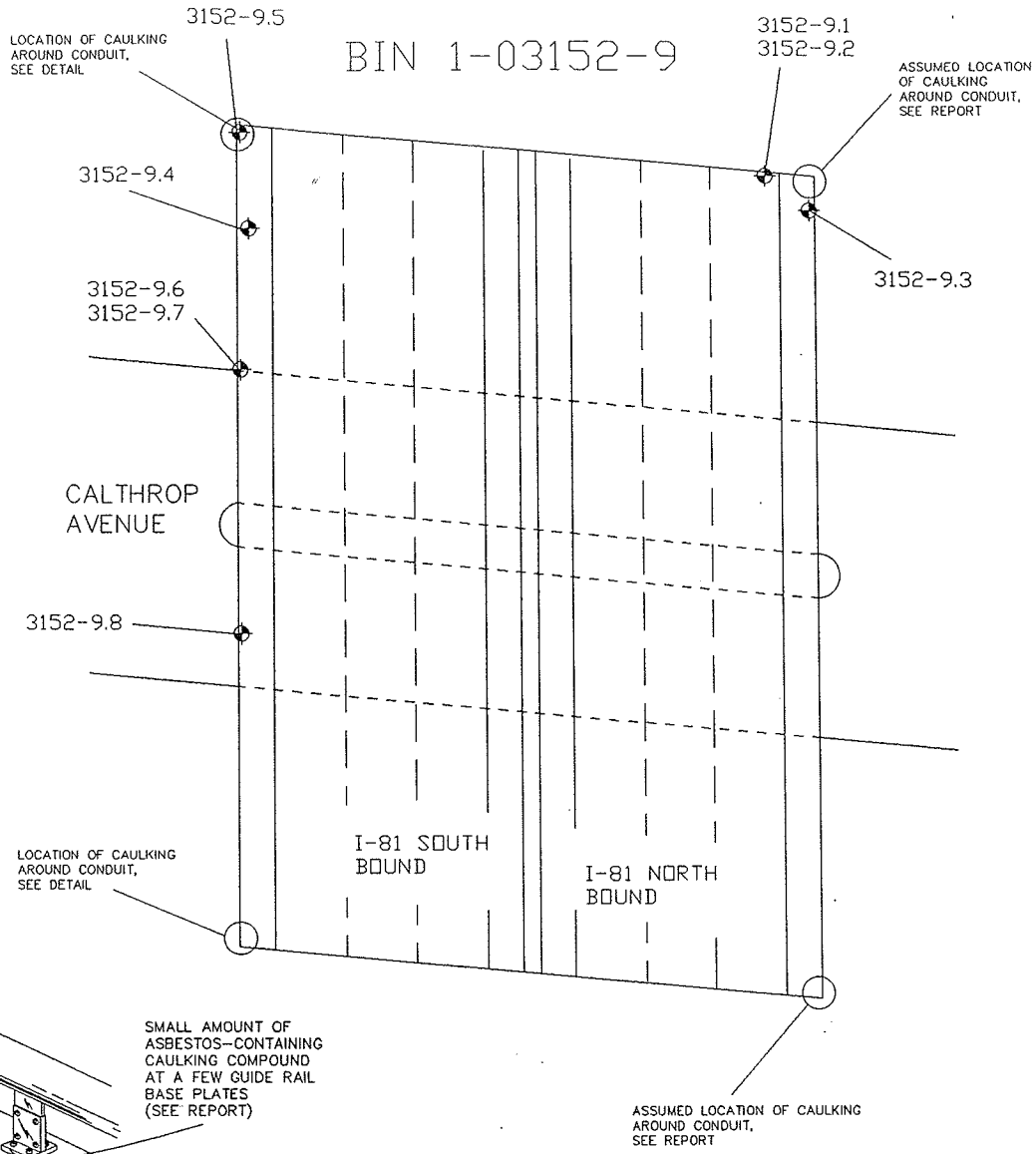

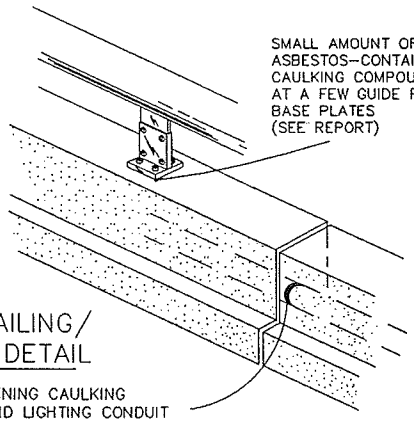

TYPICAL RAILING/ PARAPET DETAIL

ASBESTOS-CONTAINING CAULKING COMPOUND AROUND LIGHTING CONDUIT IN EXPANSION JOINTS OF PARAPET

LEGEND

◆ 3152-9.1 SAMPLE LOCATION

NORTH

PROJECT TITLE: ASBESTOS SAMPLING SURVEY
16 BRIDGES,
ONONDAGA COUNTY, NEW YORK

PROJECT NO. 97132

PIN 3804.00.101

FIGURE 2
I-81 OVER CALTHROP AVENUE
BIN 1-03152-9
SAMPLE LOCATIONS AND CONFIRMED ACM

NOT TO SCALE

DATE: MAY, 1998

Bulk Sample Results Table

Asbestos Sampling Survey
BIN 1-03152-9
Interstate Route 81 over Calthrop Avenue
Onondaga County, New York
LaBella Project # 97132
PIN 3804.00.101

Sample #	Sample Location	Type of Material	Results % Asbestos	Amount of Material	Specification Item No.
3152-9.1	North End of Bridge on Back Wall	Masonry Coating	None Detected	N/A	N/A
3152-9.2	North End of Bridge Under Bearing	Bearing Pad	None Detected	N/A	N/A
3152-9.3	North End of Bridge on East I Beam	Green Paint	None Detected	N/A	N/A
3152-9.4	**West Parapet, at Base of Guide Rail**	**Caulking Compound**	**10% Chrysotile**	**2 Linear Meters**	**15202.0629 (M)**
3152-9.5	**West Parapet Around Conduit, in Expansion Joint**	**Caulking Compound**	**16% Chrysotile**	**1 Linear Meter**	**15202.0629 (M)**
3152-9.6	West Parapet, in Expansion Joint	Joint Filler	None Detected	N/A	N/A
3152-9.7	West Parapet, in Expansion Joint	Joint Sealer	None Detected	N/A	N/A
3152-9.8	West Parapet, in Expansion Joint	Joint Sealer	None Detected	N/A	N/A

LATEST BIENNIAL INSPECTION REPORT

Inspection Date: 9/17/2013 RC: 33 BIN: 1031529

Bridge Ratings

Carried: 81I 81I33032021 Crossed: E CALTHROP AVENUE CheckValue: 1,820,776,859

Inspection Agency: 10 - NYSDOT Type of Inspection: 1 - BIENNIAL
GTMS: 302 -- Steel - Stringer/Multi-Beam or Girder
POSTINGS: See Gen Rec Page 1 for Postings at time of inspection.
Further Investigation Needed: No
State Highway Number: 64-7 Milepoint: 17.08 AADT/Yr: 48400 / 2009
Orientation: 1 - North Political Unit: 2055 - City of SYRACUSE Year Built: 1965
Total Spans: 3 Ramp Bridge Attached To Span: NA BIN: NA
General Recommendation: 6 Computed Condition Rating: 5.651

Abutment Ratings:	**Beg Abut**	**End Abut**
Joint with Deck	7	7
Bearings, Bolts, Pads	5	5
Seats and Pedestals	6	6
Backwall	6	6
Stem (Breastwall)	8	8
Erosion or Scour	6	6
Footings	9	9
Piles	8	8
Recommendation	6	6

Wingwall Ratings:	**Beg Abut**	**End Abut**
Walls	5	5
Footings	9	9
Erosion or Scour	6	6
Piles	8	8

Channel Ratings:	**Channel**
Stream Alignment	8
Erosion and Scour	8
Waterway Opening	8
Bank Protection	8

Approach Ratings:	**Approaches**
Drainage	6
Embankment	6
Settlement	7
Erosion	6
Pavement	6
Guide Railing	7

Number of Flags Issued:

RED: 0 Yellow: 0 Safety: 0

Vulnerability Reviews Recommended: 1=Yes, 2=No, 3=NA, X=NotActive

Hydraulic: 3	Overload: X	Steel: 2
Collision: 2	Concrete: X	Seismic: X

Inspector's Signature: CheckValue: 1,820,776,859 Date: 9/17/2013

Dennis Conley,PE () (Inspector ID:3000063)

Signed copy of this inspection report is available in the appropriate NYSDOT Regional Office

Reviewed By: Date: 10/16/2013

James R. Manning,PE () (QC ID:3000023)

Signed copy of this inspection report is available in the appropriate NYSDOT Regional Office

Inspection Date: 9/17/2013 RC: 33 BIN: 1031529

Span Ratings

Carried: 81I 81I33032021 Crossed: E CALTHROP AVENUE CheckValue: 1,820,776,859

Deck Element Ratings:	001	002	003
Wearing Surface	7	7	7
Curbs	8	8	8
Sidewalks, Fascias	7	7	7
Railings, Parapets	7	7	7
Scuppers	8	8	8
Gratings	8	8	8
Median	7	7	7
Mono Deck Surface	8	8	8

Superstructure Ratings:	001	002	003
Structural Deck	7	7	7
Primary Members	5	5	5
Secondary Members	6	5	6
Paint	4	4	4
Joints	7	7	8
Recommendation	6	6	6

Pier Ratings:	001	002	003
Bearings, Bolts, Pads	5	5	8
Pedestals	5	5	8
Top of Cap or Beam	5	5	8
Stem Solid Pier	8	8	8
Cap Beam	5	5	8
Pier Columns	5	5	8
Footings	9	9	8
Erosion or Scour	6	6	8
Piles	8	8	8
Recommendation	5	5	8

Utility Ratings:	001	002	003
Lighting	8	8	8
Sign Structure	7	8	7
Utilities and Support	7	7	7

Field Notes:

Field Date	Arrival	Departure	Temp (C)	Temp (F)	Weather Conditions
9/16/2013	8:30:00 AM	10:30:00 AM		70	light rain
9/17/2013	1:00:00 PM	3:00:00 PM		64	sunny

Inspection Date: 9/17/2013 RC: 33 BIN: 1031529

Inspection Notes

Carried: 81I 81I33032021 Crossed: E CALTHROP AVENUE CheckValue: 1,820,776,859

Note ID: 311310315290005

General Note for Bridge
Referenced Photos:
2013 - 100% hands-on inspection was performed on 09/16/2013.

Note ID: 311310315290000

Beg Abut -- Abutment: Joint with Deck -- Rated 7, Was 5
Approaches: Drainage -- Rated 6, Was 5
Approaches: Settlement -- Rated 7, Was 5
Approaches: Pavement -- Rated 6, Was 3
Approaches: Guide Railing -- Rated 7, Was 5
End Abut -- Abutment: Joint with Deck -- Rated 7, Was 5
Referenced Photos: "1"
2013 - Contractual work resulted in improved rating for component.

Note ID: 311310315290002

Span 001 -- Deck Elements: Wearing Surface -- Rated 7, Was 4
Span 001 -- Deck Elements: Sidewalks, Fascias -- Rated 7, Was 4
Span 001 -- Deck Elements: Railings, Parapets -- Rated 7, Was 6
Span 001 -- Deck Elements: Median -- Rated 7, Was 5
Span 001 -- Superstructure: Structural Deck -- Rated 7, Was 4
Span 001 -- Superstructure: Joints -- Rated 7, Was 4
Span 001 -- Utilities: Sign Structure -- Rated 7, Was 5
Span 001 -- Utilities: Utilities and Support -- Rated 7, Was 8
Span 002 -- Deck Elements: Wearing Surface -- Rated 7, Was 4
Span 002 -- Deck Elements: Sidewalks, Fascias -- Rated 7, Was 4
Span 002 -- Deck Elements: Railings, Parapets -- Rated 7, Was 6
Span 002 -- Deck Elements: Median -- Rated 7, Was 5
Span 002 -- Superstructure: Structural Deck -- Rated 7, Was 4
Span 002 -- Superstructure: Joints -- Rated 7, Was 4
Span 002 -- Utilities: Utilities and Support -- Rated 7, Was 4
Span 003 -- Deck Elements: Wearing Surface -- Rated 7, Was 4
Span 003 -- Deck Elements: Sidewalks, Fascias -- Rated 7, Was 4
Span 003 -- Deck Elements: Railings, Parapets -- Rated 7, Was 6
Span 003 -- Deck Elements: Median -- Rated 7, Was 5
Span 003 -- Superstructure: Structural Deck -- Rated 7, Was 4
Span 003 -- Utilities: Sign Structure -- Rated 7, Was 5
Span 003 -- Utilities: Utilities and Support -- Rated 7, Was 8
Referenced Photos: "1", "2", "7", "6"
2013 - Contractual work resulted in improved rating for component.

Note ID: 311310315290003

Span 001 -- Deck Elements: Curbs -- Rated 8, Was 5
Span 002 -- Deck Elements: Curbs -- Rated 8, Was 5
Span 003 -- Deck Elements: Curbs -- Rated 8, Was 5
Referenced Photos: "1"
2013 - Contractual work has removed component.

Inspection Notes

Carried: 81I 81I33032021 Crossed: E CALTHROP AVENUE CheckValue: 1,820,776,859

Note ID: 311310315290003 - continued

Note ID: 311310315290001

Span 001 -- Deck Elements: Mono Deck Surface -- Rated 8, Was 5
Span 002 -- Deck Elements: Mono Deck Surface -- Rated 8, Was 5
Span 003 -- Deck Elements: Mono Deck Surface -- Rated 8, Was 5
Referenced Photos: "1"
2013 - BIN was rehbilitated with precast deck panels.

Note ID: 311310315290007

Span 001 -- Superstructure: Paint -- Rated 4, Was 5
Span 002 -- Superstructure: Paint -- Rated 4, Was 4
Span 003 -- Superstructure: Paint -- Rated 4, Was 5
Referenced Photos: "3"
2013 - Paint on all spans has concentrated rust locations with pitted steel.

Note ID: 311310315290008

Span 002 -- Superstructure: Primary Members -- Rated 5, Was 5
Referenced Photos: "4"
2013 - Span 2 Right Fascia Girder With slight impact damage.

Note ID: 311310315290004

Span 002 -- Utilities: Lighting -- Rated 8, Was 4
Referenced Photos: "5", "6"
2013 - Maintenance work has removed component.

Inspection Date: 9/17/2013 RC: 33 BIN: 1031529

Inspection Photos in Photo Number Order

Carried: 81I 81I33032021 Crossed: E CALTHROP AVENUE CheckValue: 1,820,776,859

New Joint, pavement Deck Barriers, looking from left to right



Photo Number: 1 Photo Filename: 13EndJtPavtSet.jpg

Parapetes Left Side Typical, looking from end to begin



Photo Number: 2 Photo Filename: 13ParapetLt.jpg

Inspection Date: 9/17/2013 RC: 33 BIN: 1031529

Inspection Photos in Photo Number Order

Carried: 81I 81I33032021 Crossed: E CALTHROP AVENUE CheckValue: 1,820,776,859

Paint, left fascia Typical, looking from begin to end



Photo Number: 3 Photo Filename: 13PaintLt.jpg

Span 2 Right Fascia Girder With slight impact damage.



Photo Number: 4 Photo Filename: 13PmRt.jpg

Inspection Date: 9/17/2013 RC: 33 BIN: 1031529

Inspection Photos in Photo Number Order

Carried: 81I 81I33032021 Crossed: E CALTHROP AVENUE CheckValue: 1,820,776,859

Utiity support was Removed, looking from left to right



Photo Number: 5 Photo Filename: 13UtilFix.jpg

All of old lighting was removed, new conduit on left fascia



Photo Number: 6 Photo Filename: 13UtilLeft.jpg

Inspection Date: 9/17/2013 RC: 33 BIN: 1031529

Inspection Photos in Photo Number Order

Carried: 81I 81I33032021 Crossed: E CALTHROP AVENUE CheckValue: 1,820,776,859

New sign on end approach (typ of begin), looking from end to begin



Photo Number: 7 Photo Filename: 13EndApproach.jpg

No Photo

Inspection Date: 9/17/2013 RC: 33 BIN: 1031529

Inspection Sketches in Sketch SysID Order

Carried: 81I 81I33032021 Crossed: E CALTHROP AVENUE CheckValue: 1,820,776,859

Sketch ID: 311310315290000 Sketch Filename: LdRatNCL.13

General Sketch for Bridge
Referenced Photos:

Load rating.

Region 3 LoadRatingFieldCheckForm

NYSDOT BRIDGE INSPECTION REPORT			
SHEET	1	OF	1

LOAD RATING FIELD CHECK FORM

BIN:	1031529	Insp. Date:	09/17/2013

Dead Load - Note Changes since Last load Rating or state "NONE":

BIN was rehabilitated. New precast deck panels with parapets and concrete median barrier.

Section Loss -Note Changes since Last load Rating or state "NONE":

NONE

Additional Notes:

NONE

Attachments:

Team Leader: Dennis Conley

Inspection Date: 9/17/2013 RC: 33 BIN: 1031529

Gen. Rec., Postings, Federal Ratings, etc.

Carried: 81I 81I33032021 Crossed: E CALTHROP AVENUE CheckValue: 1,820,776,859

Overall Condition:

GENERAL RECOMMENDATION: 6

Computed Condition Rating: 5.651

Problems Requiring Action:

NO Further Investigation Needed

NO Flags Issued

POSTINGS:

Inspector Confirmed existing Posting data as correct.
Posted Vertical Clearance ON the bridge is: No Posting
Posted Vertical Clearance UNDER the bridge is: No Posting
No Load Restriction is posted on this bridge

Overloads Observed:

NO Overload Vehicles were observed on this bridge

FEDERAL RATINGS:

NBI Deck Condition: 9
NBI Superstruct Condition: 7
NBI Substruct Condition: 7
NBI Channel Condition: N
NBI Culvert Condition: N

Diving Inspection Needs:

Diving Inspection Required? No Date of Last Diving Inspection: No Date

Inventory Problems:

Inventory Problems Exist? No

Miscellaneous:

Time Required to Inspect Bridge: 4 Hours

Lane Closure Needs: By Contract for 1 Hours

No Railroad Flagging Required

No Pedestrian Fence

There is a Snow Fence present

The BIN Plate is in OK condition

Inspection Date: 9/17/2013 RC: 33 BIN: 1031529

Gen. Rec., Postings, Federal Ratings, etc.

Carried: 81I 81I33032021 Crossed: E CALTHROP AVENUE CheckValue: 1,820,776,859

Special Emphasis Inspection Required:

Non-Redundant/Fracture Critical Members - No
Pin and Hangers - No
Fatigue-Prone Welds - Yes
Non-Categorized Fatigue-Prone Details - No
Other (Specified in Text) - Yes

Special Emphasis Details:

E welds, interior girders, span #2, beginning and end
D and E welds, light support angles welded to lower flanges, span #2, beginning and end
D welds, clips on junction box, girder 1 at end of span #2
Concrete haunch detail, all spans

General Notes To the Next Inspector:

BIN was rehabilitated under Contract D262116. Note that the parapets on the precast deck panels are missaligned by upto 1".

Improvements Observed:

Inspection Date: 9/17/2013 RC: 33 BIN: 1031529

Review Progress and Personnel Present at Inspection

Carried: 81I 81I33032021 Crossed: E CALTHROP AVENUE CheckValue: 1,820,776,859

Inspection Submission Status:

Submitted to QC Engineer on: 9/18/2013
QC Submission Number: 153313

QC Review Completed: 10/16/2013
QC Engineer: James R. Manning

Submitted to Liaison Engineer on: 10/24/2013
Liaison Submission Number: 53345

Liaison Review Completed: 11/22/2013
Liaison Engineer: TODD M. HERMANN

Submitted for BIIS Processing on: 11/22/2013
BIIS Submission Number: .kp1

Current Status: Keypunched, Sent to BIIS
Check Value: 1,820,776,859

Personnel Present During Inspection:

Dennis Conley - Team Leader
Steve Grabosky - Assistant Team Leader
D. Buckland - WZTC
A. Norland - WZTC
D. Rudney - WZTC

Inspection Date: 9/17/2013 RC: 33 BIN: 1031529

Inspection Access Requirements

Carried: 81I 81I33032021 Crossed: E CALTHROP AVENUE CheckValue: 1,820,776,859

Equipment Required for Inspection

No Access Requirement Changes Noted During This Inspection.
This Listing is from the Inventory Database.

ACCESS CATEGORIES FOR ENTIRE BRIDGE
Required: Walking, Small Lift, Lane Closure, Shadow Vehicle

ACCESS CATEGORIES FOR SPAN 1
Required: Walking

ACCESS CATEGORIES FOR SPAN 2
Required: Walking, Small Lift, Lane Closure, Shadow Vehicle

ACCESS CATEGORIES FOR SPAN 3
Required: Walking

Inspection Date: 9/17/2013 RC: 33 BIN: 1031529

Culvert Measurements

Carried: 81I 81I33032021 Crossed: E CALTHROP AVENUE CheckValue: 1,820,776,859

Culvert Measurements

CULVERT DIMENSIONS FOR SPAN 1
LOCATION: L1
Line AF: 0.00 feet
Line FE: 0.00 feet
Line CF: 0.00 feet
Line AD: 0.00 feet
Line BE: 0.00 feet

COMMENTS:
No Comments Provided.

Standard Photos **RC: 33 BIN: 1031529**

Carried: 81I 81I33032021 Crossed: E CALTHROP AVENUE

1031529_LOCATION_MAP.JPG

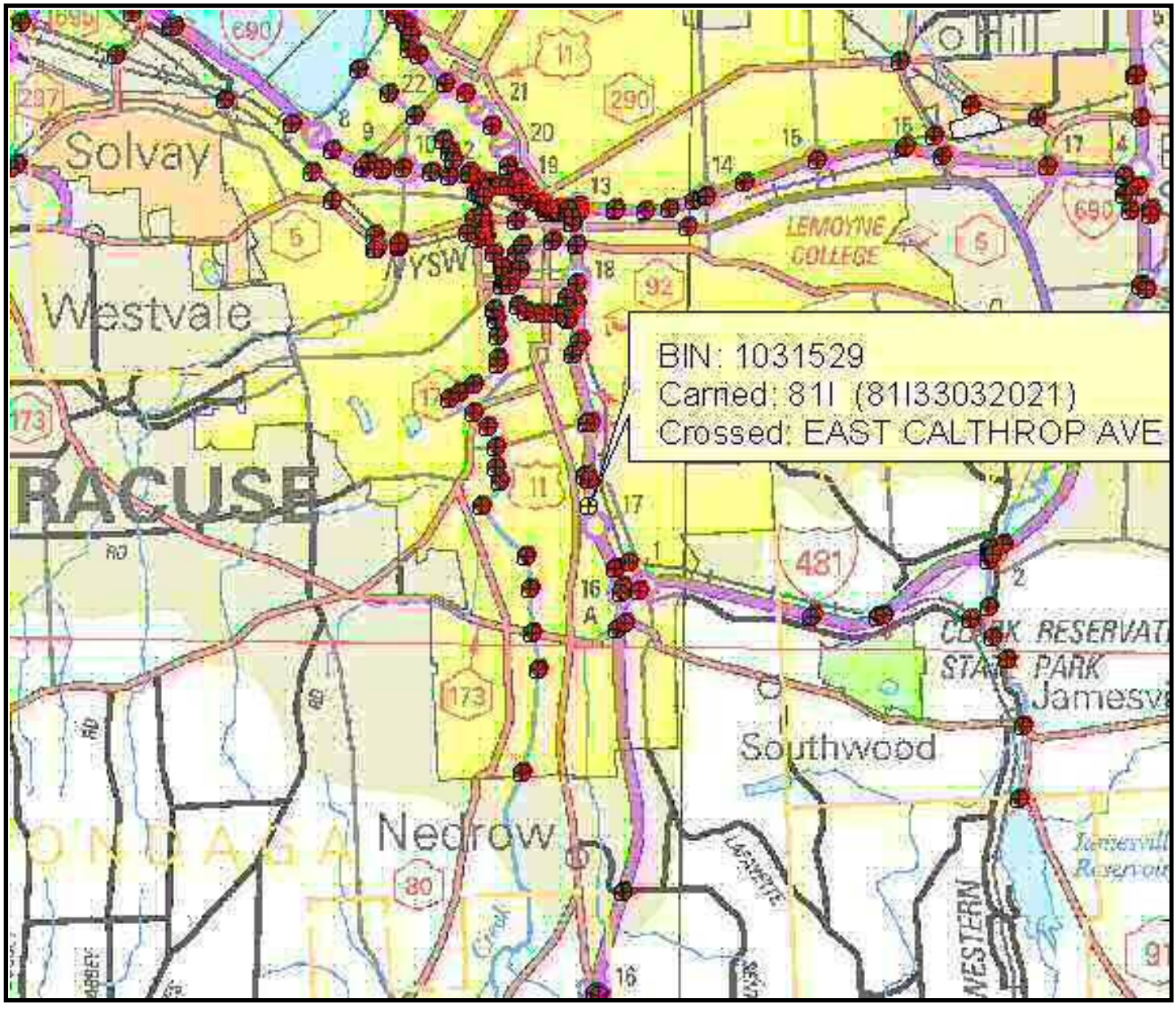

Standard Photos **RC: 33 BIN: 1031529**

Carried: 81I 81I33032021 Crossed: E CALTHROP AVENUE

1031529_QUAD_MAP.JPG

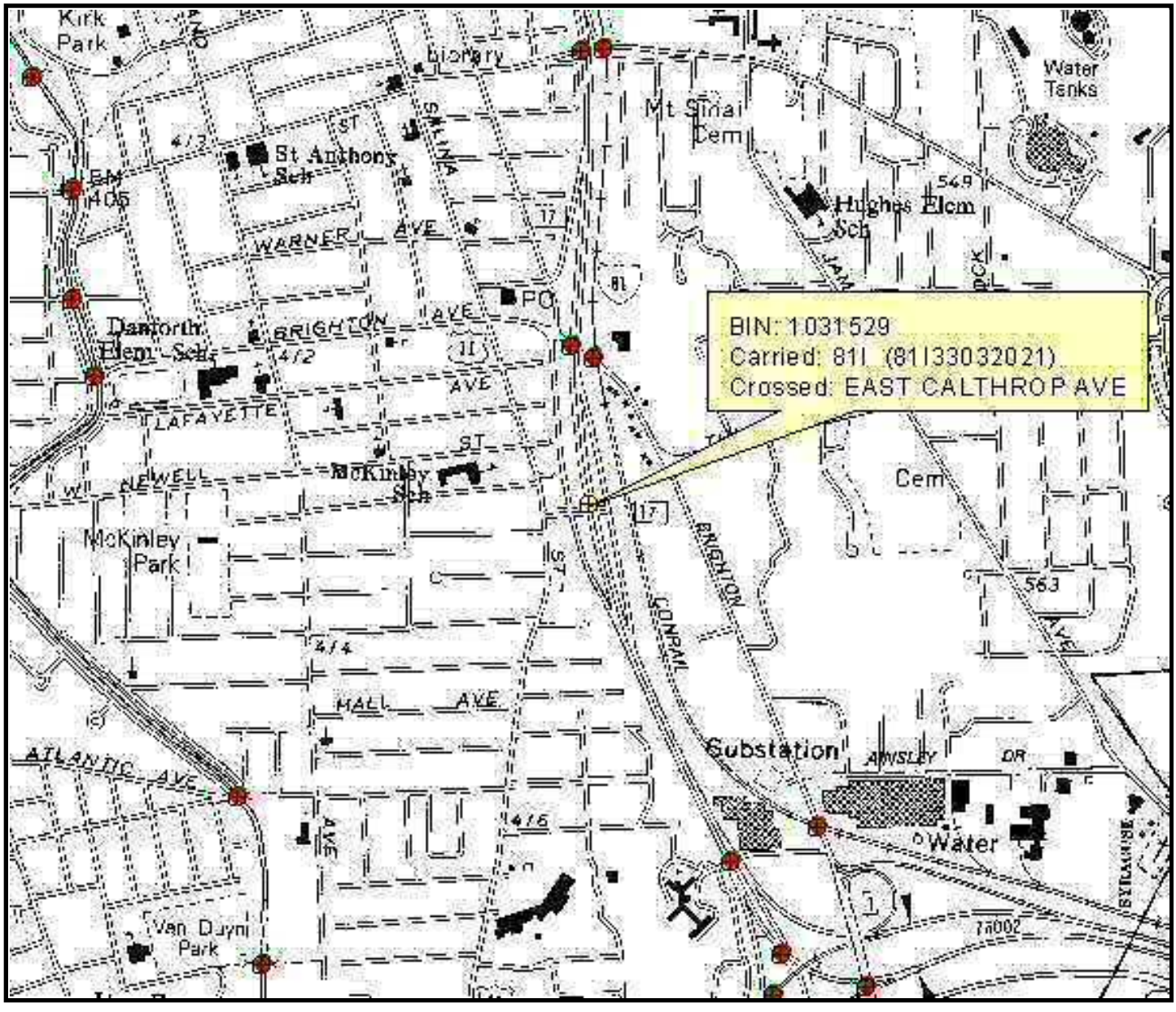

Standard Photos **RC: 33 BIN: 1031529**

Carried: 81I 81I33032021 Crossed: E CALTHROP AVENUE

13BeginAbutment.jpg



Standard Photos **RC: 33 BIN: 1031529**

Carried: 81I 81I33032021 Crossed: E CALTHROP AVENUE

13BeginApproach.jpg



Standard Photos **RC: 33 BIN: 1031529**

Carried: 81I 81I33032021 Crossed: E CALTHROP AVENUE

13EndApproach.jpg



13EndLeftWingwall.jpg

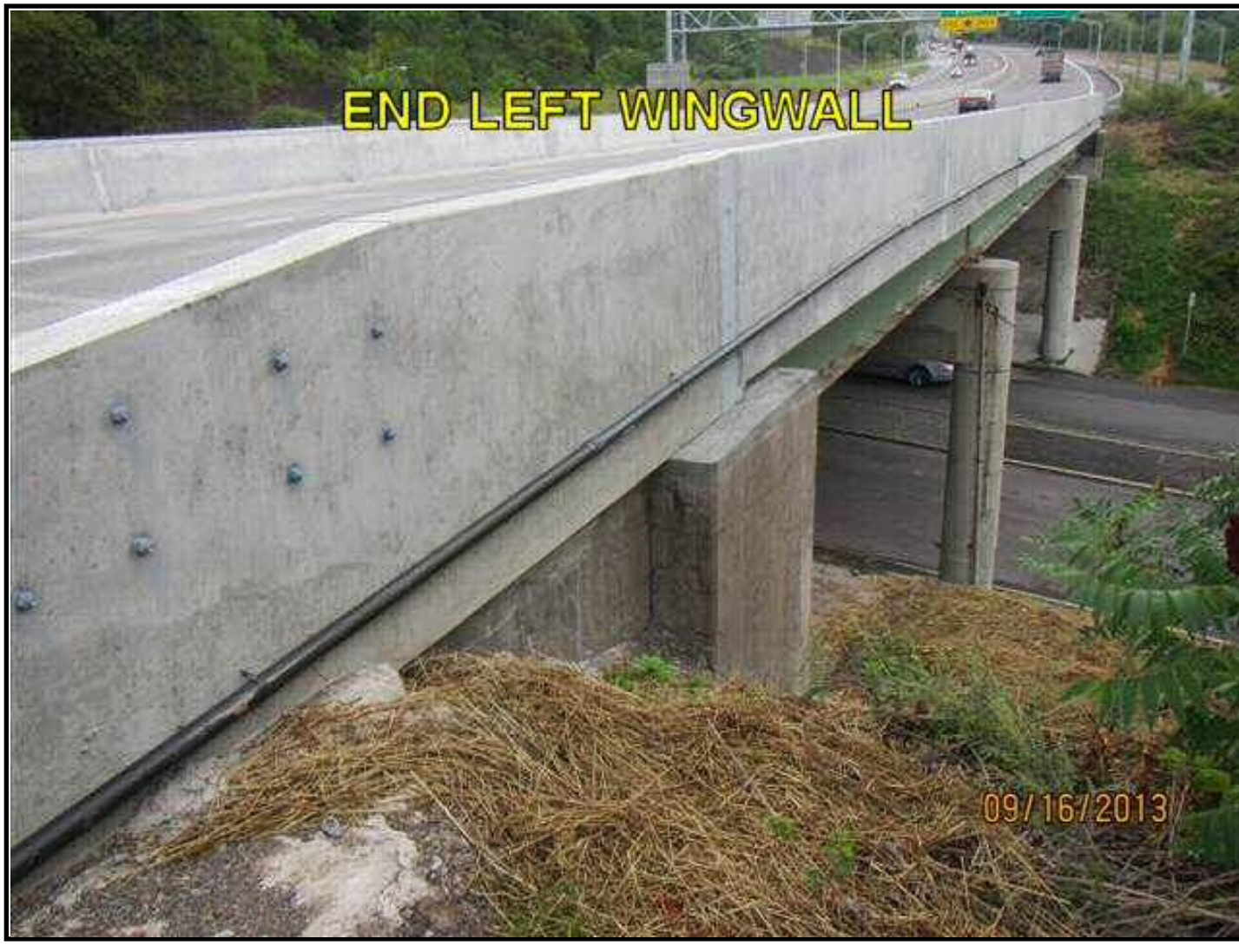

Standard Photos **RC: 33 BIN: 1031529**

Carried: 81I 81I33032021 Crossed: E CALTHROP AVENUE

13F2Left.jpg



Standard Photos **RC: 33 BIN: 1031529**

Carried: 81I 81I33032021 Crossed: E CALTHROP AVENUE

13F2Right.jpg

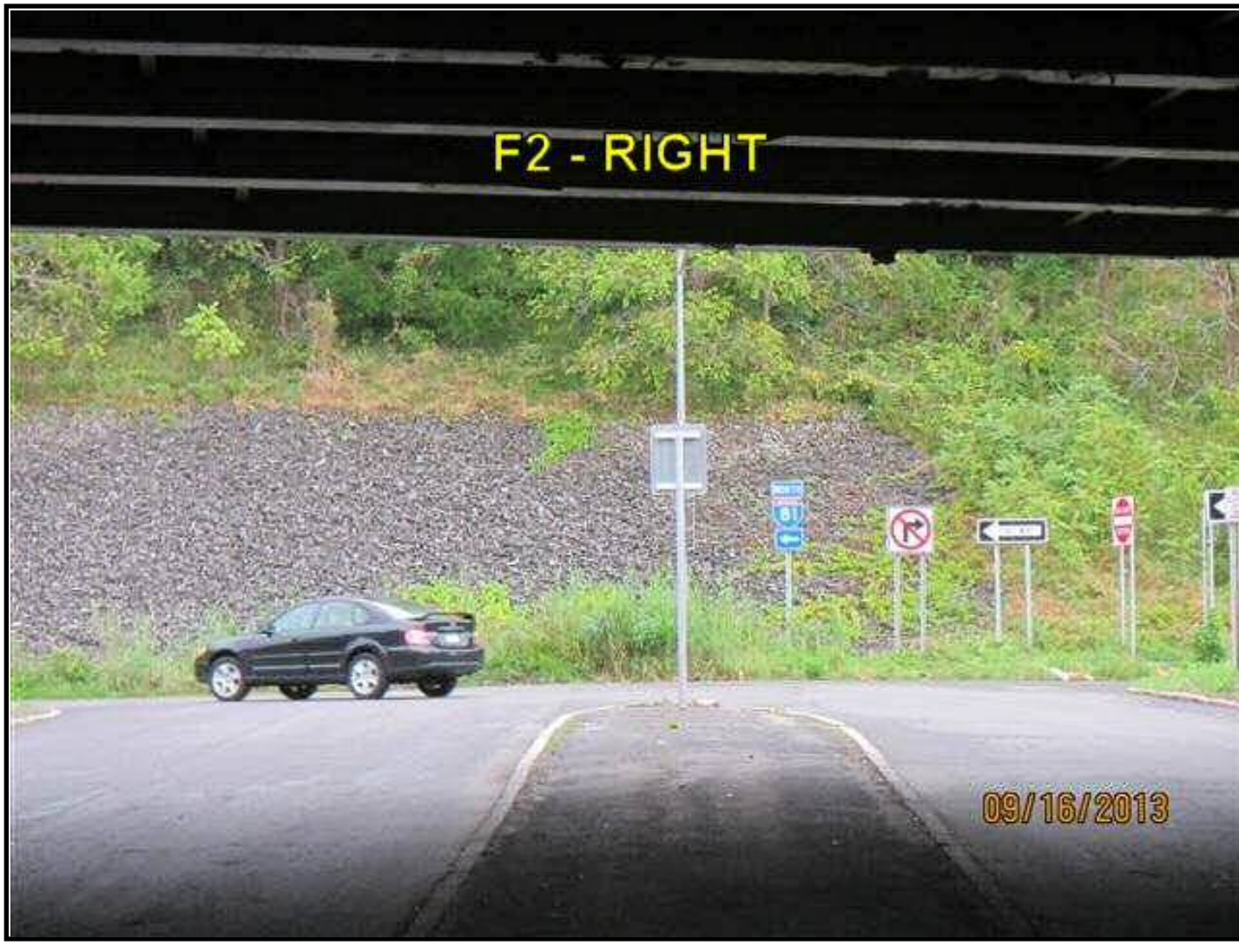

13LeftElevation.jpg



13Pier2.jpg



Standard Photos **RC: 33 BIN: 1031529**

Carried: 81I 81I33032021 Crossed: E CALTHROP AVENUE

13Underside.jpg



LOAD RATING

D031085 P.I.N. 3501.60

B.I.N. 1031529

FEATURE CARRIED: **I-81 Southbound/Northbound**

FEATURE CROSSED: **E. Calthrop Ave.**

TABLE OF CONTENTS

- LOAD RATING SUMMARY
- FIGURES (BRIDGE CROSS SECTION, FRAMING PLAN, AND GIRDER ELEVATION)
- AASHTOWARE BRIDGE RATING (FORMERLY VIRTIS) INPUT DATA
- AASHTOWARE BRIDGE RATING (FORMERLY VIRTIS) OUTPUT DATA
- RECORD DRAWINGS

Notes and Assumptions:

1. Load rating analysis of existing superstructure was performed by using AASHTOWare Bridge Rating software per project scope.
2. Based on In-depth bridge inspection report dated 4/1/2014, there was no significant section loss observed for the existing girders (except span 1 girders, top flange section loss as noted). However, due to the age of the steel a blanket 5% section loss was included in load rating.
3. Substructure is not included in the load rating analysis unless otherwise noted.

LOAD RATING SUMMARY

LEVEL 1 LOAD RATING SUMMARY SHEET

Region/County Region 3/Onondaga BIN 1031529
Feature(s) Carried and Crossed I-81 Southbound and Northbound/E. Calthrop Ave.
Date of field inspection upon which Level 1 rating is based 4/1/2014

OVERALL BRIDGE RATTNGS (BASED ON LOWEST RATED ELEMENTS):

Total number of rating units 1

	H inventory	H operating	HS inventory	HS operating
Rating	H 43.89 (tons)	H 73.30 (tons)	HS 55.72 (tons)	HS 93.06 (tons)
Lowest rated element	Span 2 (NB), Girder G1 (S10 plan)	Span 2 (NB), Girder G1 (S10 plan)	Span 2 (NB), Girder G1 (S10 plan)	Span 2 (NB), Girder G1 (S10 plan)

Analysis method LFR Comments

Individual Rating Unit Level 1 values:

Rating unit span(s) 1

Main member ratings

	H inventory	H operating	HS inventory	HS operating
Rating	H (tons)	H (tons)	HS (tons)	HS (tons)
Lowest rated element				

Analysis method Comments

Floorbeam ratings

	H inventory	H operating	HS inventory	HS operating
Rating	H (tons)	H (tons)	HS (tons)	HS (tons)
Lowest rated element				

Analysis method Comments

Stringer ratings

	H inventory	H operating	HS inventory	HS operating
Rating	H 43.89 (tons)	H 73.30 (tons)	HS 55.72 (tons)	HS 93.06 (tons)
Lowest rated element	Span 2 (NB), Girder G1 (S10 plan)	Span 2 (NB), Girder G1 (S10 plan)	Span 2 (NB), Girder G1 (S10 plan)	Span 2 (NB), Girder G1 (S10 plan)

Analysis method LFR Comments

Certified by Date

Quality Control Engineer Signature Date
Agency or Company represented by certifier

Note:
-If connection ratings govern, record them under stringer ratings for stringer – floorbeam connection, floorbeam ratings for floorbeam-main member connections, etc.
-When Level 1 results indicated the need for load posting or other corrective action, the NYSDOT Regional Structures Engineer shall be notified immediately.
-Load ratings should be filed in the regional office within 60 days of completion of calculations.
-Bridges shall be flagged based on Level I results in accordance with the current NYSDOT flagging procedure.
-Bridge load posting, closure, etc. determinations shall be made as results are being produced.

Bridge Name: 1031529
NBI Structure ID: 1031529
Bridge ID: 1031529

Analyzed By: BrR
Analyze Date: Tuesday, April 15, 2014 10:54:17
Analysis Engine: AASHTO LFR Engine Version 6.5.0.3001
Analysis Preference Setting: None

Report By: brr
Report Date: Tuesday, April 15, 2014 11:21:02

Structure Definition Name: Span 2 (NB)
Member Name: G1 (S10 plan designation)
Member Alternative Name: 5% Section Loss

Load Factor Rating Summary

Live Load		Rating Factor	Controls	Capacity (Ton)	Location Span	Location (ft)	Percent	Impact	Lane
H 20-44	Inventory	2.194	Service - Steel	43.89	1	31.85	50.0	As Requested	As Requested
	Operating	3.665	Service - Steel	73.30	1	31.85	50.0	As Requested	As Requested
HS 20-44	Inventory	1.548	Service - Steel	55.72	1	31.85	50.0	As Requested	As Requested
	Operating	2.585	Service - Steel	93.06	1	31.85	50.0	As Requested	As Requested

Note:
"N/A" indicates not applicable
"**" indicates not available

Member Rating Results Report

	Bridge Id	Structure	Member	Vehicle	Rating Level	Rating Factor	Capacity (Ton)	Location (ft)	Rating Method	Up To Date	DB
	1031529	Loc_001	G1 (S1 plan designation)	H 20-44	Inventory	3.63	72.56	16.950	LFD	☒	☐
	1031529	Loc_001	G1 (S1 plan designation)	H 20-44	Operating	6.06	121.17	16.950	LFD	☒	☐
	1031529	Loc_001	G2 (S2 plan designation)	H 20-44	Inventory	3.04	60.90	16.950	LFD	☒	☐
	1031529	Loc_001	G2 (S2 plan designation)	H 20-44	Operating	5.09	101.70	16.950	LFD	☒	☐
	1031529	Loc_001	G6 (S2 plan designation)	H 20-44	Inventory	3.03	60.53	16.950	LFD	☒	☐
	1031529	Loc_001	G6 (S2 plan designation)	H 20-44	Operating	5.05	101.09	16.950	LFD	☒	☐
	1031529	Loc_001	G7 (S3 plan designation)	H 20-44	Inventory	2.89	57.71	16.950	LFD	☒	☐
	1031529	Loc_001	G7 (S3 plan designation)	H 20-44	Operating	4.82	96.38	16.950	LFD	☒	☐
	1031529	Loc_002	G1 (S7 plan designation)	H 20-44	Inventory	2.20	43.94	31.838	LFD	☒	☐
	1031529	Loc_002	G1 (S7 plan designation)	H 20-44	Operating	3.67	73.38	31.838	LFD	☒	☐
	1031529	Loc_002	G2 (S8 plan designation)	H 20-44	Inventory	2.80	56.01	31.839	LFD	☒	☐
	1031529	Loc_002	G2 (S8 plan designation)	H 20-44	Operating	4.68	93.53	31.839	LFD	☒	☐
	1031529	Loc_002	G7 (S9 plan designation)	H 20-44	Inventory	2.70	54.04	31.839	LFD	☒	☐
	1031529	Loc_002	G7 (S9 plan designation)	H 20-44	Operating	4.51	90.24	31.839	LFD	☒	☐
	1031529	Loc_003	G1 (S13 plan designation)	H 20-44	Inventory	2.50	50.00	20.825	LFD	☒	☐
	1031529	Loc_003	G1 (S13 plan designation)	H 20-44	Operating	4.17	83.50	20.825	LFD	☒	☐
	1031529	Loc_003	G2 (S14 plan designation)	H 20-44	Inventory	3.10	61.92	20.825	LFD	☒	☐
	1031529	Loc_003	G2 (S14 plan designation)	H 20-44	Operating	5.17	103.41	20.825	LFD	☒	☐
	1031529	Loc_003	G7 (S15 plan designation)	H 20-44	Inventory	2.96	59.19	20.825	LFD	☒	☐
	1031529	Loc_003	G7 (S15 plan designation)	H 20-44	Operating	4.94	98.84	20.825	LFD	☒	☐
	1031529	Loc_004	G1 (S4 plan designation)	H 20-44	Inventory	2.88	57.67	16.955	LFD	☒	☐
	1031529	Loc_004	G1 (S4 plan designation)	H 20-44	Operating	4.82	96.31	16.955	LFD	☒	☐
	1031529	Loc_004	G2 (S5 plan designation)	H 20-44	Inventory	3.01	60.17	16.955	LFD	☒	☐
	1031529	Loc_004	G2 (S5 plan designation)	H 20-44	Operating	5.02	100.48	16.955	LFD	☒	☐
	1031529	Loc_004	G7 (S6 plan designation)	H 20-44	Inventory	3.62	72.46	16.955	LFD	☒	☐
	1031529	Loc_004	G7 (S6 plan designation)	H 20-44	Operating	6.05	121.00	16.955	LFD	☒	☐
	1031529	Loc_005	G1 (S10 plan designation)	H 20-44	Inventory	2.19	43.89	31.850	LFD	☒	☐
	1031529	Loc_005	G1 (S10 plan designation)	H 20-44	Operating	3.67	73.30	31.850	LFD	☒	☐
	1031529	Loc_005	G2 (S11 plan designation)	H 20-44	Inventory	2.75	54.99	31.850	LFD	☒	☐
	1031529	Loc_005	G2 (S11 plan designation)	H 20-44	Operating	4.59	91.84	31.850	LFD	☒	☐
	1031529	Loc_005	G7 (S12 plan designation)	H 20-44	Inventory	2.21	44.16	31.850	LFD	☒	☐
	1031529	Loc_005	G7 (S12 plan designation)	H 20-44	Operating	3.69	73.74	31.850	LFD	☒	☐
	1031529	Loc_006	G1 (S16 plan designation)	H 20-44	Inventory	2.73	54.56	20.830	LFD	☒	☐

Member Rating Results Report

	Bridge Id	Structure	Member	Vehicle	Rating Level	Rating Factor	Capacity (Ton)	Location (ft)	Rating Method	Up To Date	DB
	1031529	Loc_006	G1 (S16 plan designation)	H 20-44	Operating	4.56	91.12	20.830	LFD	☒	☐
	1031529	Loc_006	G2 (S17 plan designation)	H 20-44	Inventory	3.36	67.10	20.830	LFD	☒	☐
	1031529	Loc_006	G2 (S17 plan designation)	H 20-44	Operating	5.60	112.06	20.830	LFD	☒	☐
	1031529	Loc_006	G7 (S18 plan designation)	H 20-44	Inventory	2.72	54.46	20.830	LFD	☒	☐
	1031529	Loc_006	G7 (S18 plan designation)	H 20-44	Operating	4.55	90.95	20.830	LFD	☒	☐
	1031529	Loc_001	G1 (S1 plan designation)	HS 20-44	Inventory	3.04	109.30	13.560	LFD	☒	☐
	1031529	Loc_001	G1 (S1 plan designation)	HS 20-44	Operating	5.07	182.52	13.560	LFD	☒	☐
	1031529	Loc_001	G2 (S2 plan designation)	HS 20-44	Inventory	2.54	91.56	13.560	LFD	☒	☐
	1031529	Loc_001	G2 (S2 plan designation)	HS 20-44	Operating	4.25	152.90	13.560	LFD	☒	☐
	1031529	Loc_001	G6 (S2 plan designation)	HS 20-44	Inventory	2.53	91.02	13.560	LFD	☒	☐
	1031529	Loc_001	G6 (S2 plan designation)	HS 20-44	Operating	4.22	152.00	13.560	LFD	☒	☐
	1031529	Loc_001	G7 (S3 plan designation)	HS 20-44	Inventory	2.42	87.19	20.340	LFD	☒	☐
	1031529	Loc_001	G7 (S3 plan designation)	HS 20-44	Operating	4.04	145.60	20.340	LFD	☒	☐
	1031529	Loc_002	G1 (S7 plan designation)	HS 20-44	Inventory	1.55	55.78	31.838	LFD	☒	☐
	1031529	Loc_002	G1 (S7 plan designation)	HS 20-44	Operating	2.59	93.16	31.838	LFD	☒	☐
	1031529	Loc_002	G2 (S8 plan designation)	HS 20-44	Inventory	1.98	71.10	31.839	LFD	☒	☐
	1031529	Loc_002	G2 (S8 plan designation)	HS 20-44	Operating	3.30	118.74	31.839	LFD	☒	☐
	1031529	Loc_002	G7 (S9 plan designation)	HS 20-44	Inventory	1.91	68.60	31.839	LFD	☒	☐
	1031529	Loc_002	G7 (S9 plan designation)	HS 20-44	Operating	3.18	114.57	31.839	LFD	☒	☐
	1031529	Loc_003	G1 (S13 plan designation)	HS 20-44	Inventory	1.92	69.08	20.825	LFD	☒	☐
	1031529	Loc_003	G1 (S13 plan designation)	HS 20-44	Operating	3.20	115.36	20.825	LFD	☒	☐
	1031529	Loc_003	G2 (S14 plan designation)	HS 20-44	Inventory	2.38	85.55	20.825	LFD	☒	☐
	1031529	Loc_003	G2 (S14 plan designation)	HS 20-44	Operating	3.97	142.87	20.825	LFD	☒	☐
	1031529	Loc_003	G7 (S15 plan designation)	HS 20-44	Inventory	2.27	81.77	20.825	LFD	☒	☐
	1031529	Loc_003	G7 (S15 plan designation)	HS 20-44	Operating	3.79	136.55	20.825	LFD	☒	☐
	1031529	Loc_004	G1 (S4 plan designation)	HS 20-44	Inventory	2.42	87.08	13.564	LFD	☒	☐
	1031529	Loc_004	G1 (S4 plan designation)	HS 20-44	Operating	4.04	145.43	13.564	LFD	☒	☐
	1031529	Loc_004	G2 (S5 plan designation)	HS 20-44	Inventory	2.51	90.45	13.564	LFD	☒	☐
	1031529	Loc_004	G2 (S5 plan designation)	HS 20-44	Operating	4.20	151.06	13.564	LFD	☒	☐
	1031529	Loc_004	G7 (S6 plan designation)	HS 20-44	Inventory	3.03	109.12	20.346	LFD	☒	☐
	1031529	Loc_004	G7 (S6 plan designation)	HS 20-44	Operating	5.06	182.24	20.346	LFD	☒	☐
	1031529	Loc_005	G1 (S10 plan designation)	HS 20-44	Inventory	1.55	55.72	31.850	LFD	☒	☐
	1031529	Loc_005	G1 (S10 plan designation)	HS 20-44	Operating	2.59	93.06	31.850	LFD	☒	☐

Member Rating Results Report

	Bridge Id	Structure	Member	Vehicle	Rating Level	Rating Factor	Capacity (Ton)	Location (ft)	Rating Method	Up To Date	DB
	1031529	Loc_005	G2 (S11 plan designation)	HS 20-44	Inventory	1.94	69.82	31.850	LFD	☒	☐
	1031529	Loc_005	G2 (S11 plan designation)	HS 20-44	Operating	3.24	116.60	31.850	LFD	☒	☐
	1031529	Loc_005	G7 (S12 plan designation)	HS 20-44	Inventory	1.56	56.06	31.850	LFD	☒	☐
	1031529	Loc_005	G7 (S12 plan designation)	HS 20-44	Operating	2.60	93.63	31.850	LFD	☒	☐
	1031529	Loc_006	G1 (S16 plan designation)	HS 20-44	Inventory	2.09	75.37	20.830	LFD	☒	☐
	1031529	Loc_006	G1 (S16 plan designation)	HS 20-44	Operating	3.50	125.87	20.830	LFD	☒	☐
	1031529	Loc_006	G2 (S17 plan designation)	HS 20-44	Inventory	2.58	92.69	20.830	LFD	☒	☐
	1031529	Loc_006	G2 (S17 plan designation)	HS 20-44	Operating	4.30	154.80	20.830	LFD	☒	☐
	1031529	Loc_006	G7 (S18 plan designation)	HS 20-44	Inventory	2.09	75.23	20.830	LFD	☒	☐
	1031529	Loc_006	G7 (S18 plan designation)	HS 20-44	Operating	3.49	125.64	20.830	LFD	☒	☐

FIGURES

(BRIDGE CROSS SECTION, FRAMING PLAN, AND GIRDER ELEVATION)

1031529
1031529 - Span 1 (SB)
81I 81I33032021 / E. Calthrop Ave.
04/15/14

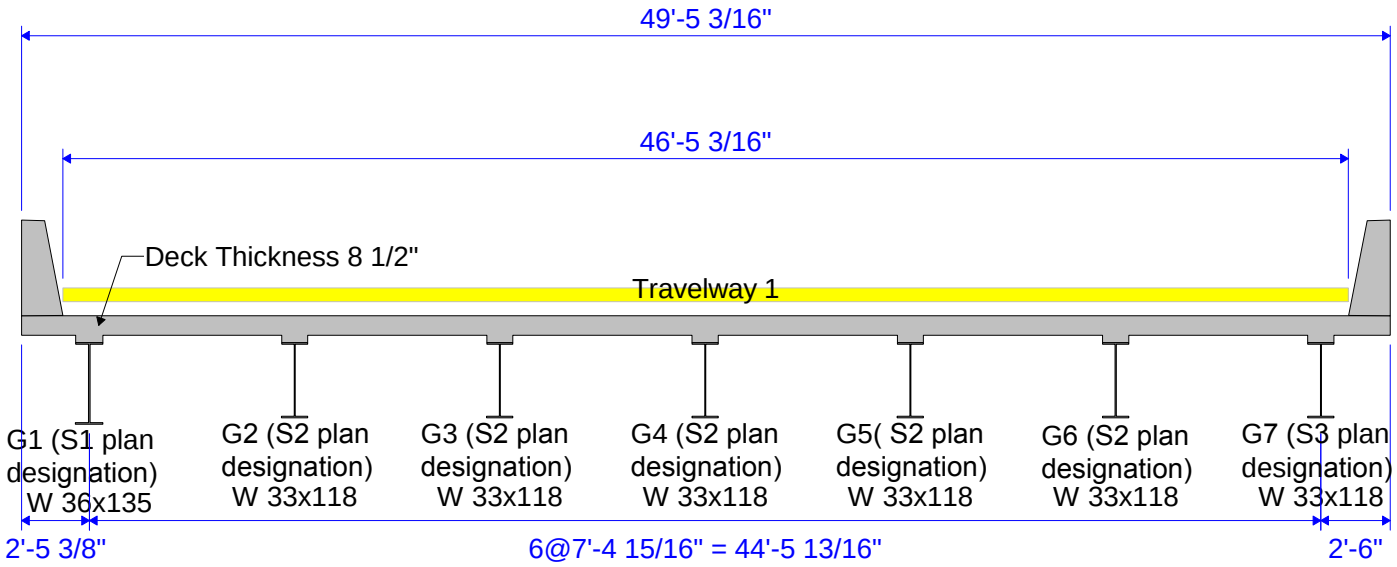

1031529
1031529 - Span 1 (SB)
81I 81I33032021 / E. Calthrop Ave.
04/15/14

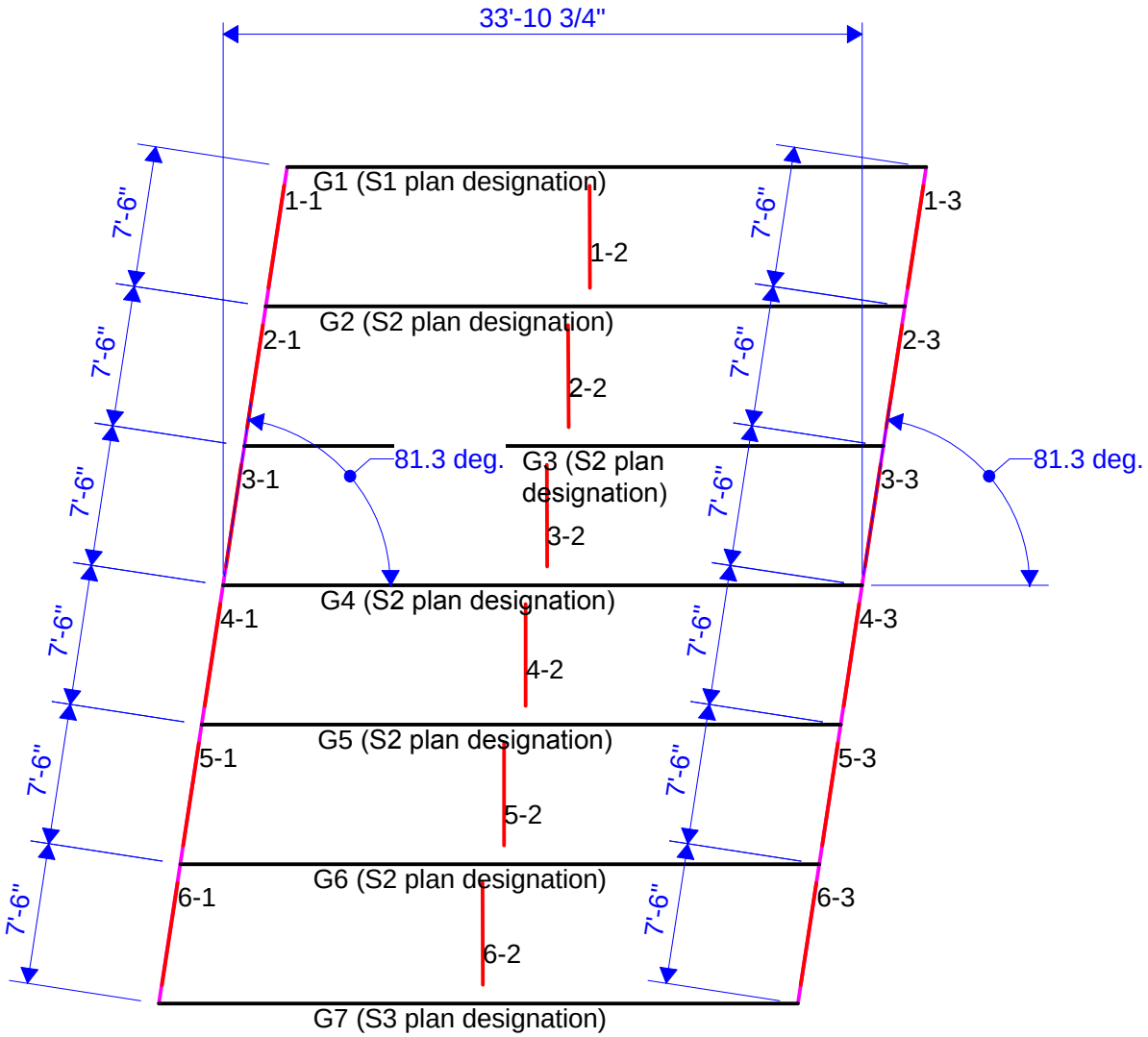

1031529
1031529 - Span 1 (NB)
81I 81I33032021 / E. Calthrop Ave.
04/15/14

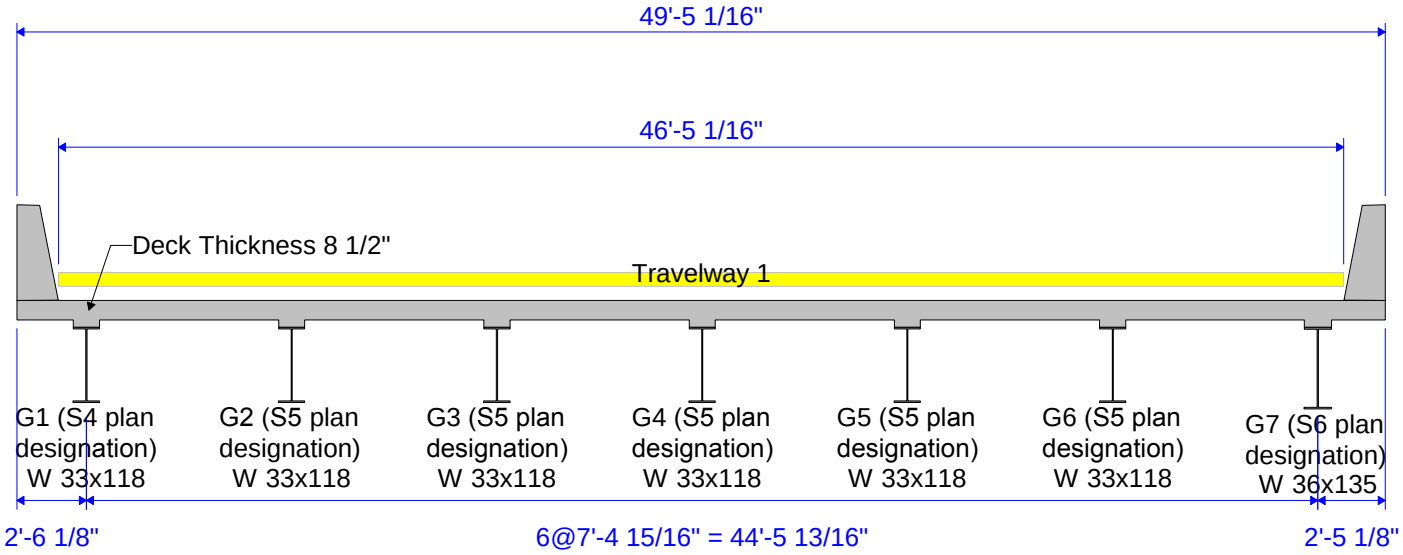

1031529
1031529 - Span 1 (NB)
81I 81I33032021 / E. Calthrop Ave.
04/15/14

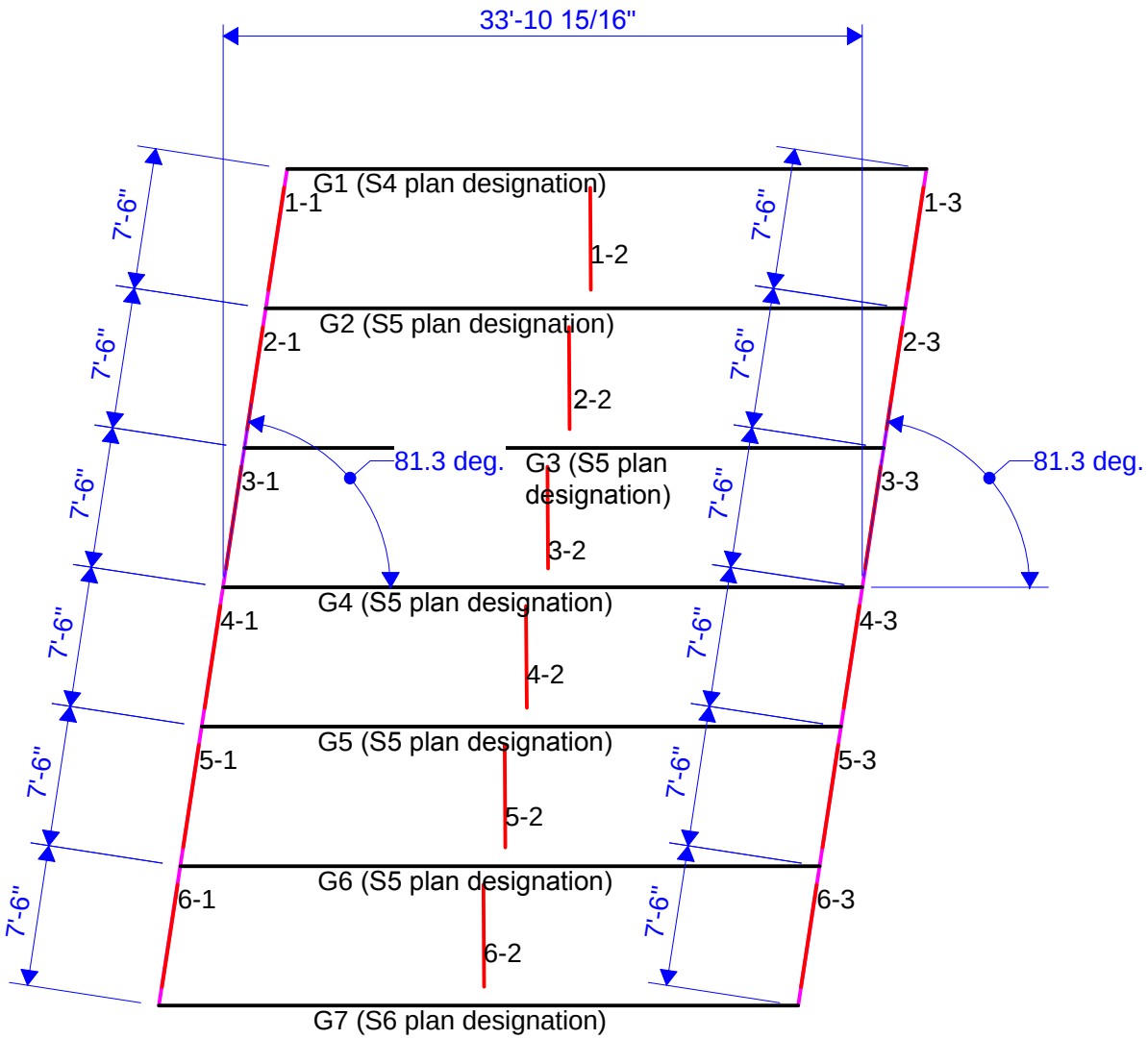

1031529
1031529 - Span 2 (SB)
81I 81I33032021 / E. Calthrop Ave.
04/15/14

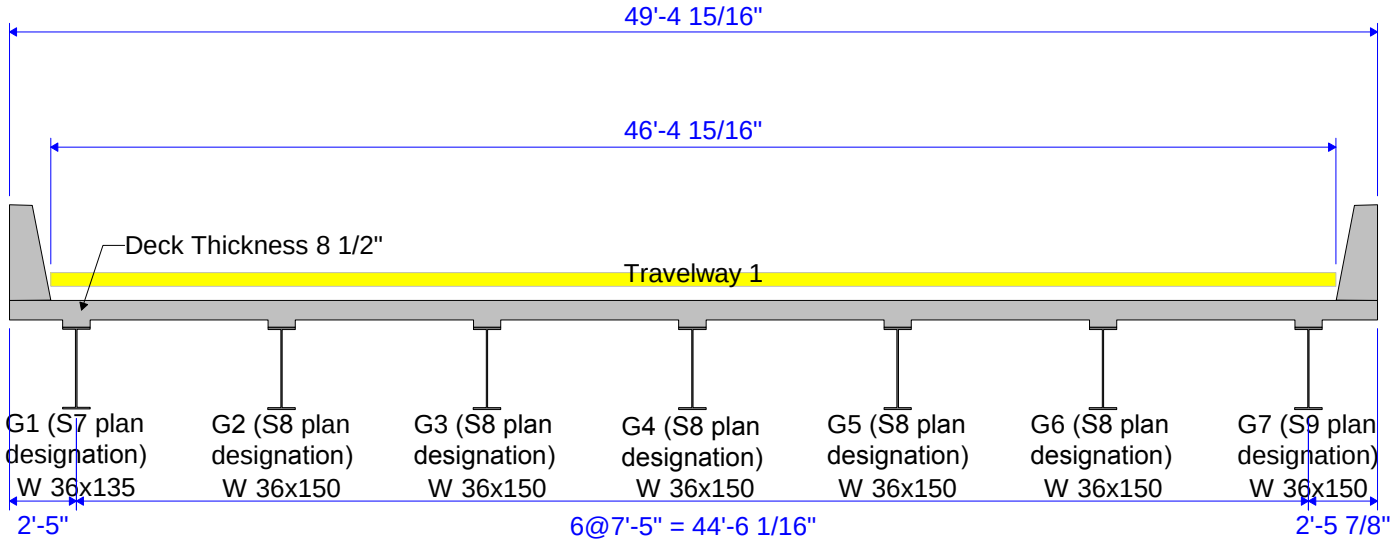

1031529
1031529 - Span 2 (SB)
81I 81I33032021 / E. Calthrop Ave.
04/15/14

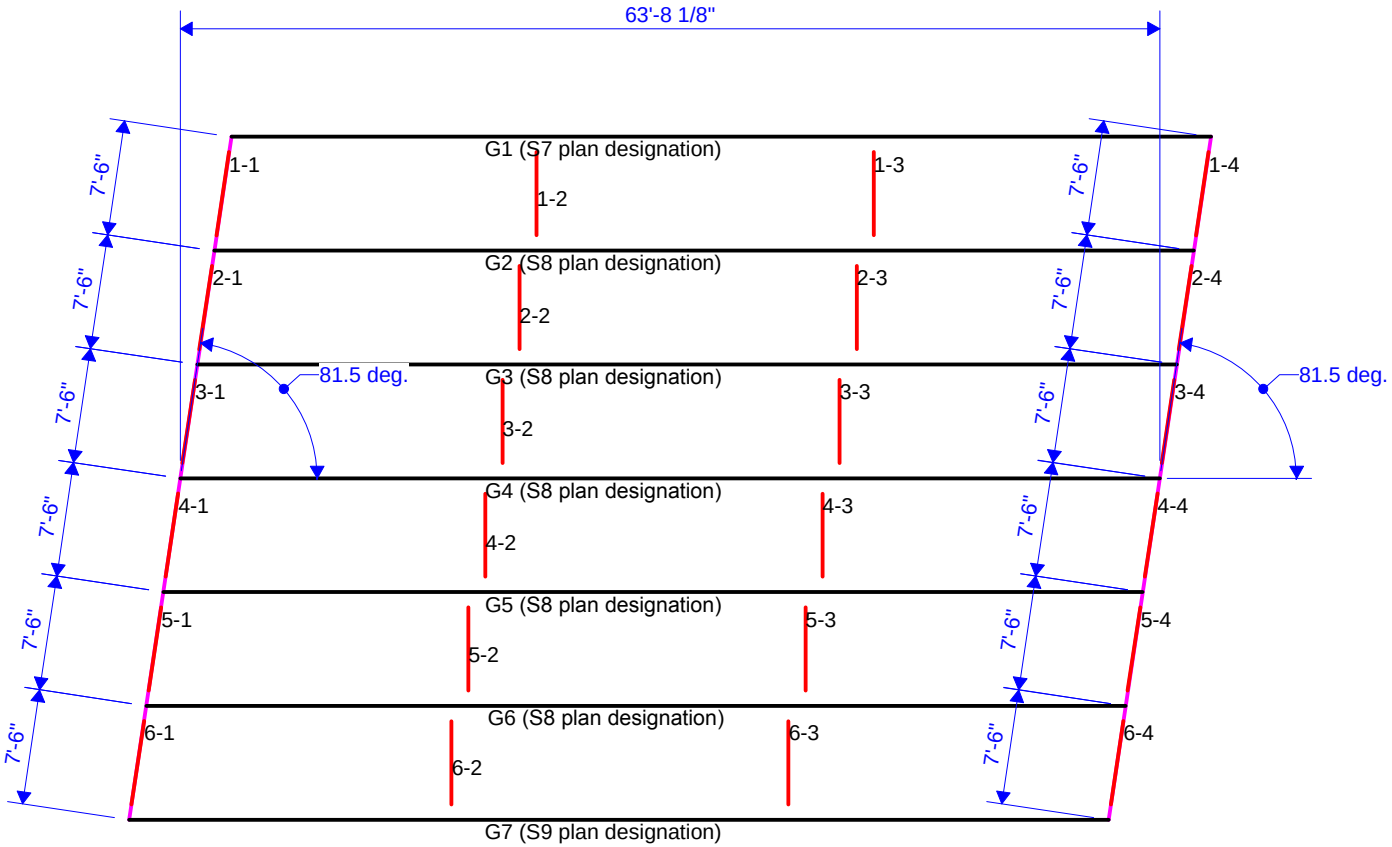

1031529
1031529 - Span 2 (NB)
81I 81I33032021 / E. Calthrop Ave.
04/15/14

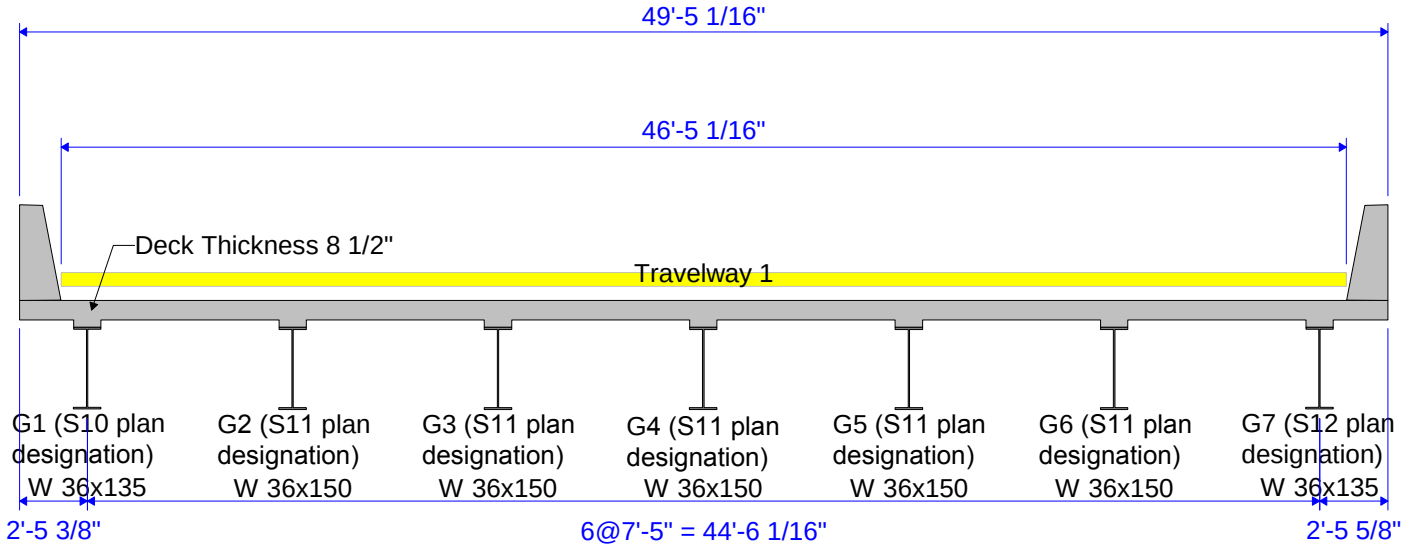

1031529
1031529 - Span 2 (NB)
81I 81I33032021 / E. Calthrop Ave.
04/15/14

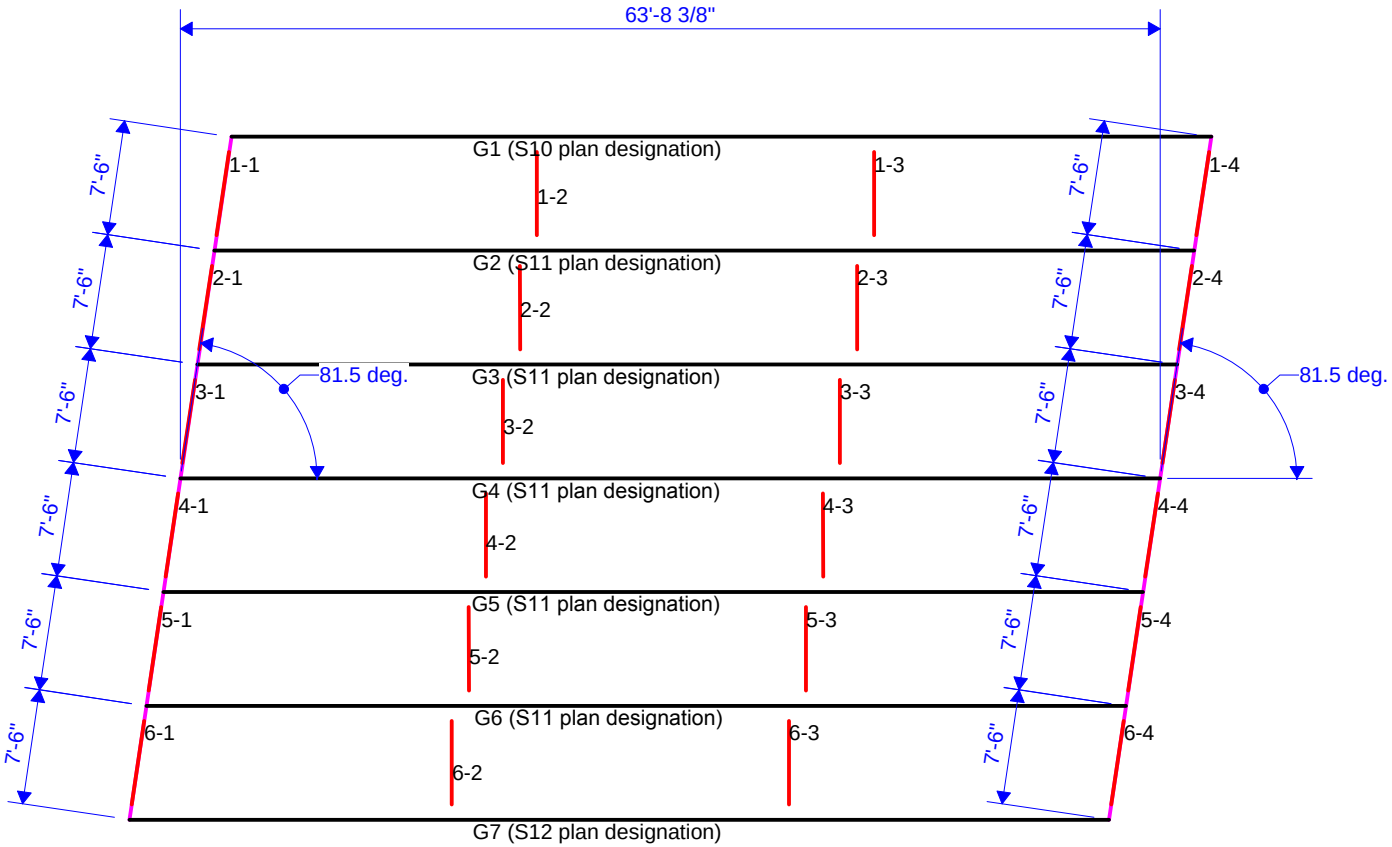

1031529
1031529 - Span 3 (SB)
81I 81I33032021 / E. Calthrop Ave.
04/15/14

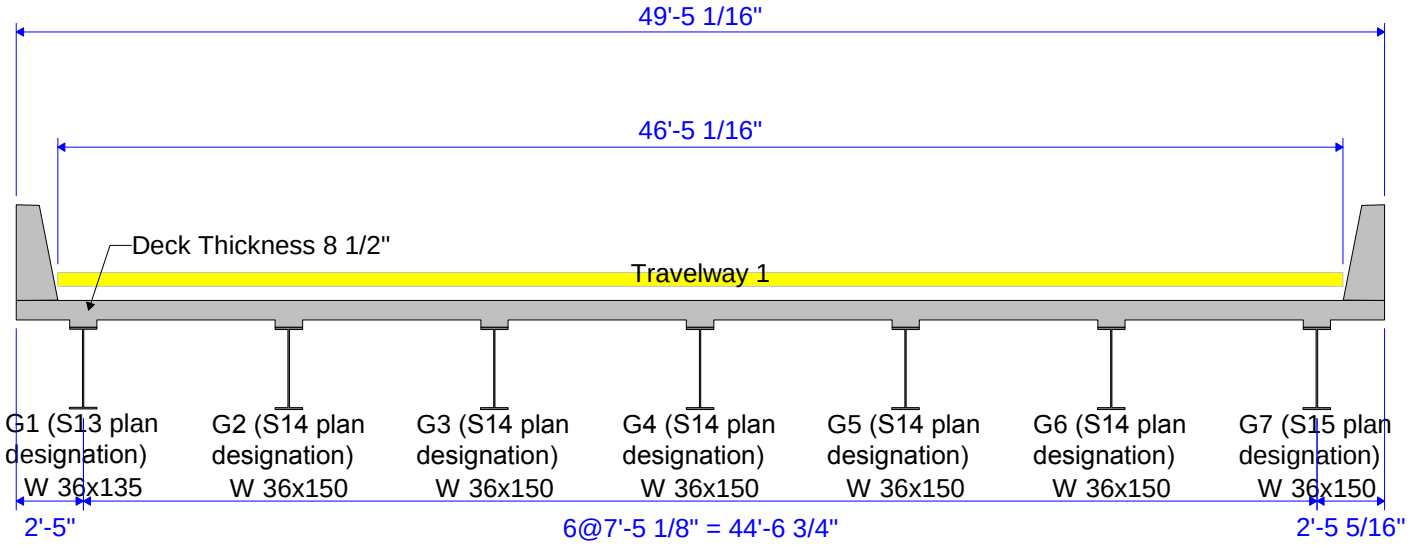

1031529
1031529 - Span 3 (SB)
81I 81I33032021 / E. Calthrop Ave.
04/15/14

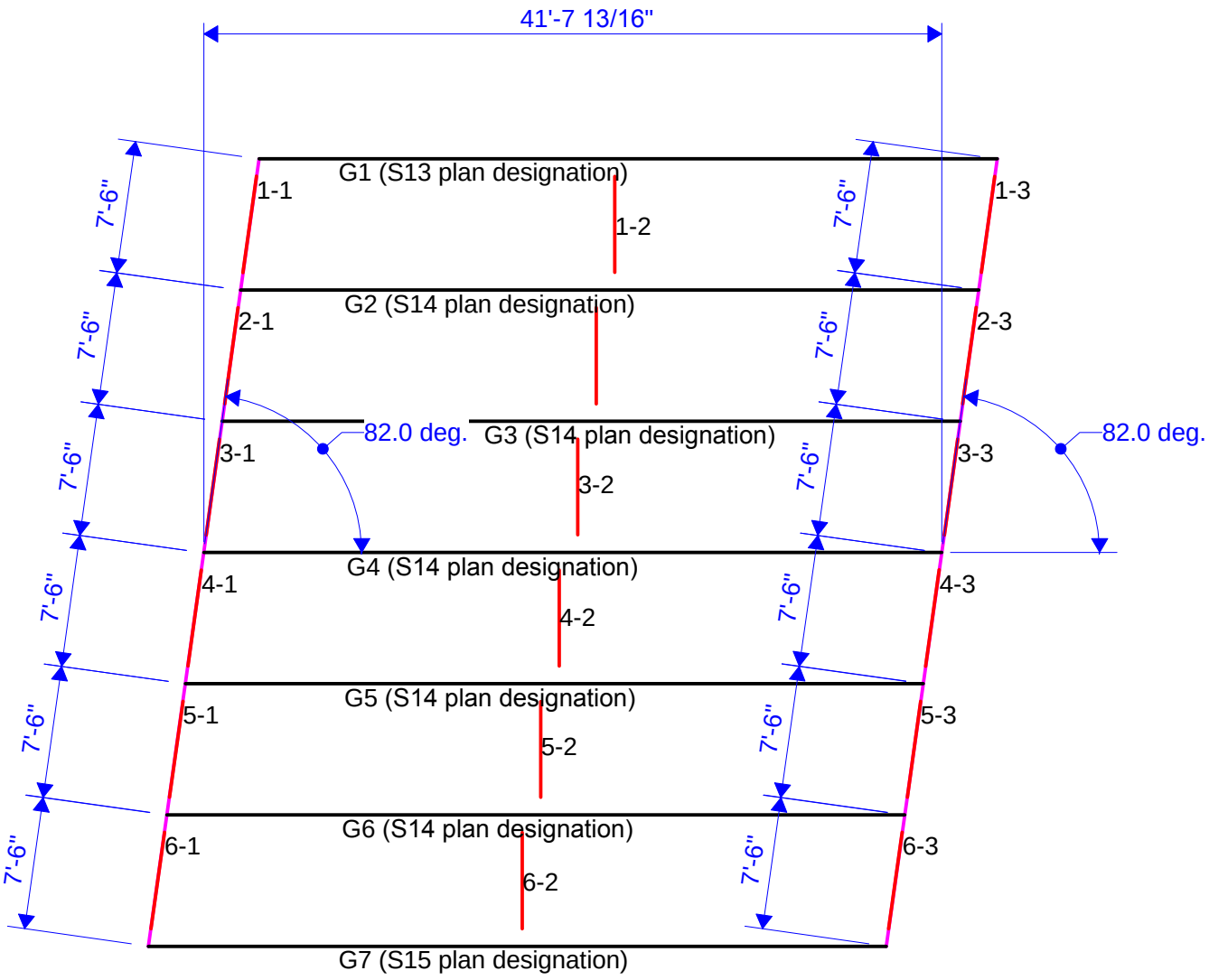

1031529
1031529 - Span 3 (NB)
81I 81I33032021 / E. Calthrop Ave.
04/15/14

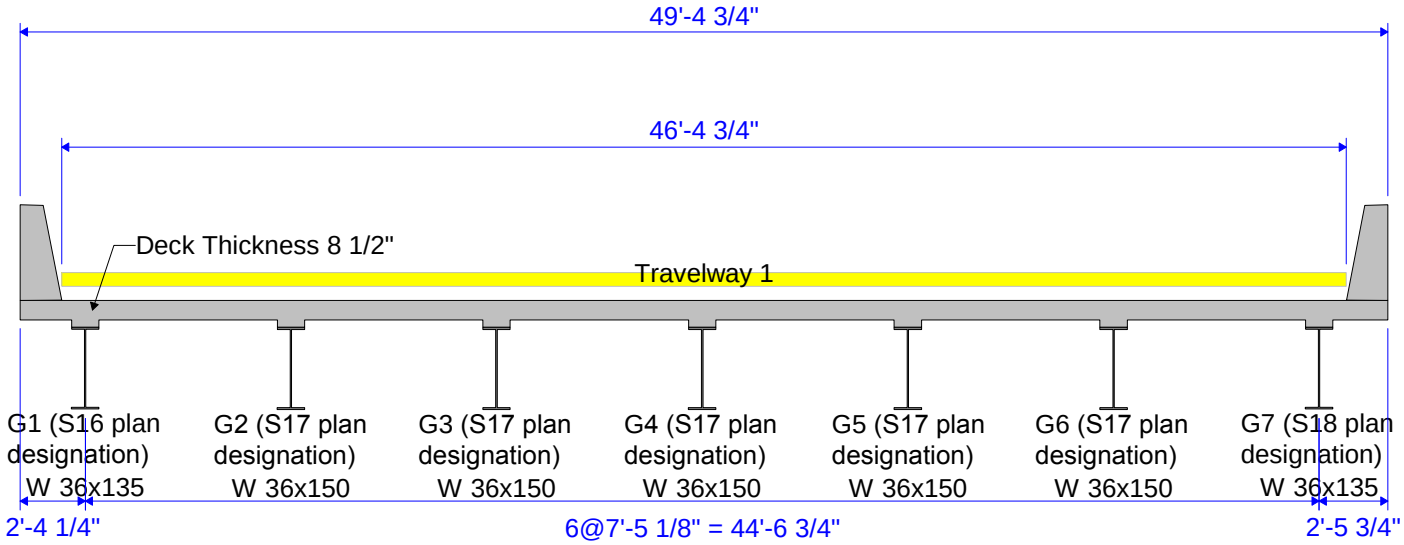

1031529
1031529 - Span 3 (NB)
81I 81I33032021 / E. Calthrop Ave.
04/15/14

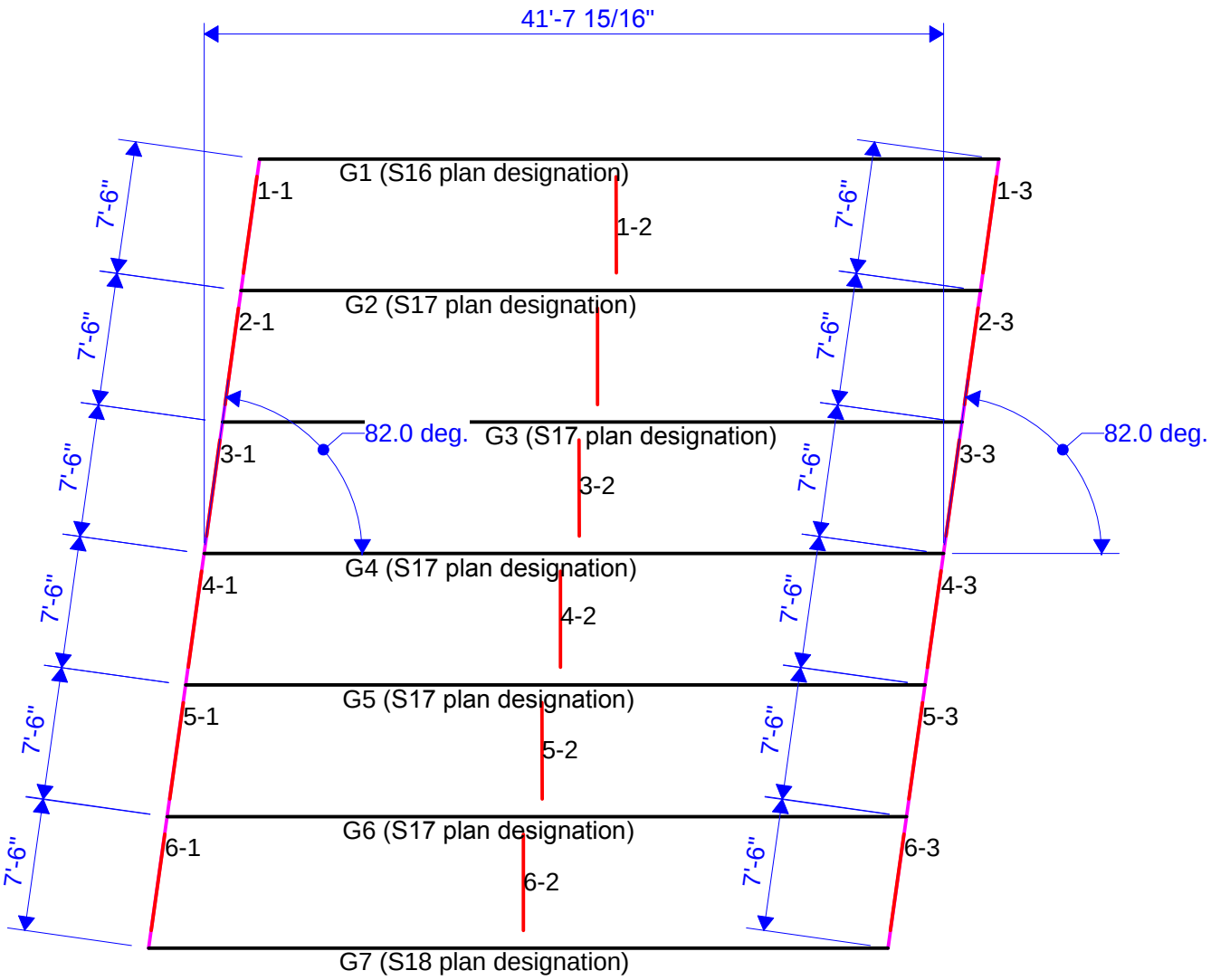

1031529
1031529 - Span 2 (NB) - G1 (S10 plan designation)
81I 81I33032021 / E. Calthrop Ave.
04/15/14

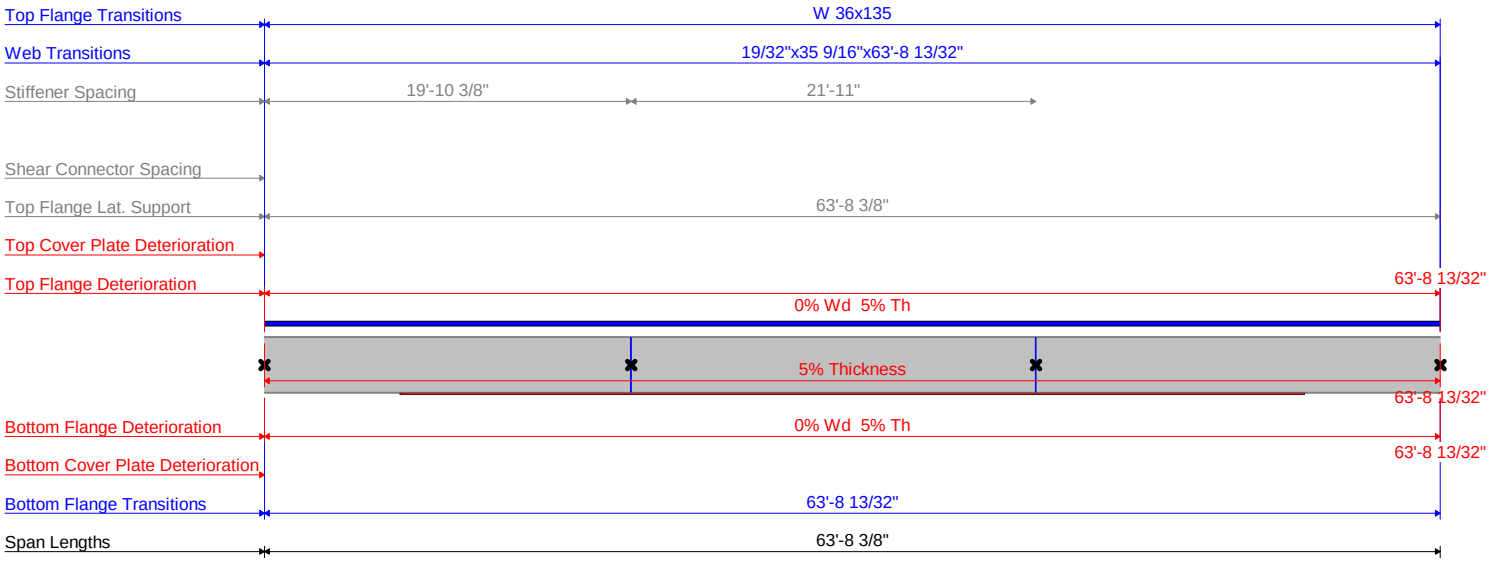

Notes:
* All flange length dimensions are horiz. (length along flange may differ).
* Transverse stiffener pairs shown in red.
* Single transverse stiffener shown in blue.
* Bearing stiffeners shown in green.
* Dimensioning starts and ends at CL bearings.
* X denotes cross frame locations.

AASHTOWARE BRIDGE RATING (FORMERLY VIRTIS)

INPUT DATA

Username: brr
Date: Tuesday, April 15, 2014 11:22:58

Bridge ID 1031529 1031529

NBI Structure ID (8): 1031529
Description: Updated by R. Liptack, 4/9/2014
Checked by K. Chau, 4/11/2014

Comments: Due to the age of the steel, a blanket 5% section loss is included in load rating. Span lengths and typical sections were updated.

Updated by M. Kostakis 11/07/2013:
Checked by M. Macie, 2/4/2014
2013 changes:
1. Accelarated Bridge Deck Replacement - precast panels.
2013 Note:
Section Losses added to top flanges of G1, G6 and G7 of Location 1(South bound span 1) on 7/31/13. These losses measured after deck was removed for replacement.
Original Comments:
Built underFIC 64-7. Deck rehabbed SB 1984 under D250712; NB 1988 D500578
Note: Parapets removed in 2007 under D259742.
This three span bridge is two separate, identical structures side by side, therefor this model has 6 spans (Location 1,2,3,4,5,6).
Updated by R3. 12/05/2011.

Description

Location:	Syracuse
Total Length:	141.00 *(ft)*
Facility Carried:	81I 81I33032021
Route Number:	I81
Feature Intersected:	E. Calthrop Ave.
Mi Post:	*(mi)*
Units:	US Customary
Year Built:	1964
Recent ADTT:	50805
District:	
County:	
Owner:	State Highway Agency
National Highway System:	1 On the NHS
Functional Class:	11 Urban Interstate

Global Reference Point

X Coordinate:	0.000 *(ft)*
Y Coordinate:	0.000 *(ft)*
Elevation:	*(ft)*
Longitude:	*(Degrees)*
Latitude:	*(Degrees)*

Materials

Structural Steel

Name:	**AASHTO M 94(1961)**
Description:	AASHTO M 94(1961) or ASTM A 7(1967)
Specified minimum yield strength (Fy):	33.000 *(ksi)*
Specified minimum tensile strength (Fu):	60.000 *(ksi)*
Coefficient of thermal expansion:	0.0000065000 *(1/F)*
Density:	0.4900 *(kcf)*
Modulus of elasticity (E):	29000.00 *(ksi)*

Concrete

Name:	**4000 psi**
Description:	4.0 ksi
Specified compressive strength at 28 days (f'c):	4.000 *(ksi)*
Initial specified compressive strength (f'ci):	4.000 *(ksi)*
Coefficient of thermal expansion:	0.0000060000 *(1/F)*
Density (for dead loads):	0.150 *(kcf)*
Density (for modulus of elasticity):	0.145 *(kcf)*
Modulus of elasticity (Ec):	3644.15 *(ksi)*
Poisson's ratio:	0.200
Modulus of rupture:	0.480 *(ksi)*
Shear factor:	1.000
Composition of concrete:	Normal
Initial modulus of elasticity (Eci):	3644.15 *(ksi)*

No rebar materials.

No prestressing strand materials.

No timber materials.

Beam Shapes

Steel Shapes

No steel angles.

No steel channels.

Steel I Shapes

Name:	**W 36x135**
Description:	W 36x135 Imported from AISC Tables (1994)
Depth (d):	35.5500 *(in)*
Flange width (bf):	11.9500 *(in)*
Flange thickness (tf):	0.7900 *(in)*

Web thickness (tw):		0.6000 *(in)*
k:		1.6875 *(in)*
k1:		*(in)*
Cross sectional area:		39.700 *(in^2)*
Nominal load:		135.000 *(lb/ft)*
Ixx:		7800.000 *(in^4)*
Iyy:		225.000 *(in^4)*
Zx:		509.000 *(in^3)*
Zy:		59.700 *(in^3)*
Nominal Depth:		36.0000 *(in)*
Type:		W Shape
Name:	**W 33x118**	
Description:	W 33x118 Imported from AISC Tables (1994)	
Depth (d):		32.8600 *(in)*
Flange width (bf):		11.4800 *(in)*
Flange thickness (tf):		0.7400 *(in)*
Web thickness (tw):		0.5500 *(in)*
k:		1.5625 *(in)*
k1:		*(in)*
Cross sectional area:		34.700 *(in^2)*
Nominal load:		118.000 *(lb/ft)*
Ixx:		5900.000 *(in^4)*
Iyy:		187.000 *(in^4)*
Zx:		415.000 *(in^3)*
Zy:		51.300 *(in^3)*
Nominal Depth:		33.0000 *(in)*
Type:		W Shape
Name:	**W 36x150**	
Description:	W 36x150 Imported from AISC Tables (1994)	
Depth (d):		35.8500 *(in)*
Flange width (bf):		11.9750 *(in)*
Flange thickness (tf):		0.9400 *(in)*
Web thickness (tw):		0.6250 *(in)*
k:		1.8750 *(in)*
k1:		*(in)*
Cross sectional area:		44.200 *(in^2)*
Nominal load:		150.000 *(lb/ft)*
Ixx:		9040.000 *(in^4)*
Iyy:		270.000 *(in^4)*
Zx:		581.000 *(in^3)*
Zy:		70.900 *(in^3)*
Nominal Depth:		36.0000 *(in)*
Type:		W Shape

No steel structural tee shapes.

Prestressed Shapes

No prestressed shapes.

Timber Shapes

No timber shapes.

Appurtenances

Parapets

Name:	**Single-Slope Barrier**	
Description:	NYSDOT Standard Single-Slope Barrier	
X1:	10.0000	*(in)*
X2:	8.0000	*(in)*
X3:	0.0000	*(in)*
Y1:	0.3750	*(in)*
Y2:	41.1250	*(in)*
Y3:	0.0000	*(in)*
Y4:	0.0000	*(in)*
Distance to Center of Gravity of Load:		*(in)*
Additional Load:		*(kip/ft)*
Concrete Density:	0.1500	*(kcf)*

No concrete medians.

No concrete generics.

No steel railings.

Impact

Standard Impact Factor

Type:	Standard - AASHTO

LRFD Dynamic Load Allowance

Fatigue and fracture limit states:	15.0	*(%)*
All other limit states:	33.0	*(%)*

Factors

Factors - LFD

Name:	2002 AASHTO Std. Specifications
Description:	AASHTO Standard Specifications for Highway Bridges, 17th Edition, 2002

Load Factors

Load Group	Gamma D		(L+I)n	(L+I)p	CF	E	B
Inventory	1.300	1.000	1.670	0.000	1.000	1.000	1.000
Operating	1.300	1.000	1.000	0.000	1.000	1.000	1.000

Load Group	SF	W	WL	LF	R+S+T	EQ	ICE
Inventory	1.000	0.000	0.000	0.000	0.000	0.000	0.000
Operating	1.000	0.000	0.000	0.000	0.000	0.000	0.000

Resistance Factors

Reinforced concrete:	
Flexure:	0.900
Reinforced concrete:	
Shear:	0.850
Prestressed concrete:	
Flexure:	1.000
Prestressed concrete:	
Shear:	0.900
Prestressed concrete:	
Flexure in Non-P/S Components:	0.900
Steel:	
Flexure:	1.000
Steel:	
Shear:	1.000
Steel:	
Bearing Stiffeners:	1.000

No LRFD Factors specified.

Bridge Alternatives Alternative 1

Reference Line
Reference Line Length: *(ft)*
Starting Station: *(ft)*
Bearing: N 90^ 0' 0.00" E
Global Positioning
Distance: 0.000 *(ft)*
Offset: 0.000 *(ft)*
Elevation: *(ft)*

Structures
Name: Loc_001
Description:

Structure Alternatives
Name: Alt 1
Description:
Superstructure Definition: Span 1 (SB)

Structures
Name: Loc_002
Description:

Structure Alternatives
Name: Alt 1
Description:
Superstructure Definition: Span 2 (SB)

Structures
Name: Loc_003
Description:

Structure Alternatives
Name: Alt 1
Description:
Superstructure Definition: Span 3 (SB)

Structures
Name: Loc_004
Description:

Structure Alternatives
Name: Alt 1
Description:
Superstructure Definition: Span 1 (NB)

Structures
Name: Loc_005
Description:

Structure Alternatives
Name: Loc_005
Description:
Superstructure Definition: Span 2 (NB)

Structures
Name: Loc_006
Description:

Structure Alternatives
Name: Alt 1
Description:
Superstructure Definition: Span 3 (NB)

Superstructure Definition Span 1 (SB)

Definition
Units: US Customary
Number of spans: 1
Number of girders: 7

Span	Length *(ft)*
1	33.9000

Frame Structure Simplified Definition:

Support	Frame Connection
1	
2	

Girder Spacing Display Type: Along Support
Average Humidity: 70.000 *(%)*

Analysis

Default Library Factors
Factor Override
Analysis Module
Analysis Method: ASD
Analysis Module:
Analysis Module Component:
Properties:

Analysis Method: LFD
Analysis Module:
Analysis Module Component:
Properties:

Analysis Method: LRFD
Analysis Module:
Analysis Module Component:
Properties:

Analysis Method: LRFR
Analysis Module:
Analysis Module Component:
Properties:

Analysis Method: Distribution Factors
Analysis Module:
Analysis Module Component:
Properties:

Default rating method: LFD

Impact

Standard Impact Factor
Type: Standard - AASHTO
LRFD Dynamic Load Allowance
Fatigue and fracture limit states: 15.0 *(%)*
All other limit states: 33.0 *(%)*

Structure Framing Plan Details

Layout

	Skew

Support	*(Degrees)*
1	8.7000
2	8.7000

Girder Spacing Orientation: Along Support

Girder Bay	Girder Spacing Start *(ft)*	End *(ft)*
1	7.5000	7.5000
2	7.5000	7.5000
3	7.5000	7.5000
4	7.5000	7.5000
5	7.5000	7.5000
6	7.5000	7.5000

Diaphragms

Girder Bay 1

Distance Left Girder *(ft)*	Distance Right Girder *(ft)*	Diaphragm Spacing *(ft)*	Number of Spaces	Diaphragm Weight *(kip)*
0.00	0.00	0.00	1	0.2450
16.04	17.20	0.00	1	0.3200
33.90	33.90	0.00	1	0.2700

Girder Bay 2

Distance Left Girder *(ft)*	Distance Right Girder *(ft)*	Diaphragm Spacing *(ft)*	Number of Spaces	Diaphragm Weight *(kip)*
0.00	0.00	0.00	1	0.2450
16.04	17.20	0.00	1	0.3200
33.90	33.90	0.00	1	0.2700

Girder Bay 3

Distance Left Girder *(ft)*	Distance Right Girder *(ft)*	Diaphragm Spacing *(ft)*	Number of Spaces	Diaphragm Weight *(kip)*
0.00	0.00	0.00	1	0.2450
16.04	17.20	0.00	1	0.3200
33.90	33.90	0.00	1	0.2700

Girder Bay 4

Distance Left Girder *(ft)*	Distance Right Girder *(ft)*	Diaphragm Spacing *(ft)*	Number of Spaces	Diaphragm Weight *(kip)*
0.00	0.00	0.00	1	0.2450
16.04	17.20	0.00	1	0.3200
33.90	33.90	0.00	1	0.2700

Girder Bay 5

Distance Left Girder *(ft)*	Distance Right Girder *(ft)*	Diaphragm Spacing *(ft)*	Number of Spaces	Diaphragm Weight *(kip)*
0.00	0.00	0.00	1	0.2450
16.04	17.20	0.00	1	0.3200
33.90	33.90	0.00	1	0.2700

Girder Bay 6

Distance Left Girder (ft)	Distance Right Girder (ft)	Diaphragm Spacing (ft)	Number of Spaces	Diaphragm Weight (kip)
0.00	0.00	0.00	1	0.2450
16.04	17.20	0.00	1	0.3200
33.90	33.90	0.00	1	0.2700

Structure Typical Section

Deck

Left start width: 24.69 *(ft)*
Left end width: 24.69 *(ft)*
Right start width: 24.74 *(ft)*
Right end width: 24.74 *(ft)*
Left start overhang: 2.45 *(ft)*
Left end overhang: 2.45 *(ft)*

Deck (Cont'd)

Deck concrete: 4000 psi
Total deck thickness: 8.5000 *(in)*
Deck crack control parameter: *(kip/in)*
Sustained modular ratio factor: 3.000

Parapet

Name	Load Case	Measure To	Measured From	Distance At Start	Distance At End	Front Face Orientation
Single-Sl...	Concret...	Back	Left Ed...			Right
Single-Sl...	Concret...	Back	Right E...			Left

Lane Position

Offset Left Start: -23.19 *(ft)*
Offset Left End: -23.19 *(ft)*
Offset Right Start: 23.24 *(ft)*
Offset Right End: 23.24 *(ft)*

Wearing Surface

Wearing surface material:
Description:
Wearing surface thickness: *(in)*
Wearing surface density: *(pcf)*
Load case:

Load Case Description

Load Case Name	Description	Stage	Type	Time (Days)
Concrete Deck		Non-composite (Sta...	D,DC	
parapet+sidewalk		Composite (long te...	D,DC	
utilities		Composite (long te...	D,DC	
wearing surface		Composite (long te...	D,DW	

Superstructure Loads

DL Distribution

Stage 1 Dead Load Distribution: Tributary Area

Stage 2 Dead Load Distribution: Uniformly to All Girders

Stiffener Definitions

Transverse Stiffeners

Name:	Single Connection
Stiffener number:	Single
Plate Width:	7.0000 *(in)*
Plate Thickness:	0.4375 *(in)*
Material:	AASHTO M 94(1961)
Top Gap:	*(in)*
Bottom Gap:	*(in)*
Top Weld:	
Web Weld:	
Bottom Weld:	

Name:	Double Connection
Stiffener number:	Pair
Plate Width:	7.0000 *(in)*
Plate Thickness:	0.4375 *(in)*
Material:	AASHTO M 94(1961)
Top Gap:	*(in)*
Bottom Gap:	*(in)*
Top Weld:	
Web Weld:	
Bottom Weld:	

No prestress stress limits.

No prestress properties.

No vertical shear reinforcement definitions.

No horizontal shear reinforcement definitions.

Member G1 (S1 plan designation)

Link with: None
Description:

Existing: 5% Section Loss -
Current: 5% Section Loss -
Number of Spans: 1

Span Number	Span Length *(ft)*
1	33.900000

Support	Frame Connection
1	

2

Pedestrian load: *(lb/ft)*

Member Loads

Member Loads - Settlement

Support Number	Horizontal *(in)*	Vertical *(in)*	Rotational *(Radians)*	Load Case Name
1				
2				

Support Constraints

General

Support Number	Support Type	X Translation	Y Translation	Z Rotation
1	Pinned	Fixed	Fixed	Free
2	Roller	Free	Fixed	Free

Elastic

Support Number	X Translation *(kip/ft)*	Y Translation *(kip/ft)*	Z Rotation *(kip-in/rad)*	Override Computed Z Rotation
1				
2				

Member Alternative 5% Section Loss

Description:

Description

Material Type: Steel
Girder Type: Rolled
Member units: US Customary
Girder property input method: Schedule based
Left end X: 5.0000 *(in)*
Right end X: 5.0000 *(in)*
Additional Self Load: *(kip/ft)*
Additional Self Load %: *(%)*

Analysis Module

Analysis Method: ASD
Analysis Module: AASHTO ASD
Analysis Module Component:
Properties:

Analysis Method: LFD
Analysis Module: AASHTO LFD
Analysis Module Component:
Properties:

Analysis Method: LRFD
Analysis Module: AASHTO LRFD
Analysis Module Component:

Properties:

Analysis Method: LRFR
Analysis Module: AASHTO LRFR
Analysis Module Component:
Properties:

Analysis Method: Distribution Factors
Analysis Module:
Analysis Module Component:
Properties:

Default rating method: LFD

Factors
Factor Override
LRFD:
LFD:
ASD Factors

	Inventory	Operating
Structural steel		
Concrete		
PS Concrete Comp.		
PS Concrete Tens.		
PS Moment Cap.		
Reinforcement		
Bearing Stiffener		
Stirrup		
Timber	NA	

Default Materials
Structural steel: AASHTO M 94(1961)
Deck concrete: 4000 psi
Deck reinforcement:
Welds:
Bolts:

Impact
Standard Impact Factor
Type: Standard - AASHTO
LRFD Dynamic Load Allowance
Fatigue and fracture limit states: 15.0 *(%)*
All other limit states: 33.0 *(%)*

Live Load Distribution
Standard

	Distribution Factor (Wheels)			
Lanes Loaded	Shear	Shear at Supports	Moment	Deflection

1 Lane	1.267	0.907	1.267	0.286
Multi-Lane	1.267	0.907	1.267	0.771

Girder Profile

Shape

Shape:	W 36x135
Distance:	0.00 *(ft)*
Length:	33.90 *(ft)*
Material:	AASHTO M 94(1961)

Deck Profile

Deck Concrete

Material (LRFD)	Distance n *(ft)*	Length *(ft)*	Total Thickness *(in)*	Structural Thickness *(in)*	Effective Width (Std) *(in)*	Effective Width *(in)*
4000 psi	0.00	33.90		8.0000	73.8582	73.8582

Shear Connectors

Start Distance *(ft)*	Length *(ft)*	Connector Name	Number per Row	Number of Spaces	Transverse Spacing *(in)*
0.00	33.90	Composite			

Haunch Profile

Haunch Type:	Flange edges
Embedded flange:	FALSE

Distance *(ft)*	Length *(ft)*	Z1 *(in)*	Z2 *(in)*	Z3 *(in)*	Z4 *(in)*	Y1 *(in)*	Y2 *(in)*
0.00	33.90	0.0000	0.0000	0.0000	0.0000	3.2500	3.2500

Bracing Ranges

Lateral Support

Distance *(ft)*	Length *(ft)*
0.00	33.90

Stiffener Ranges

Transverse Stiffener Ranges (Location)

Name	Distance *(ft)*	Number	Spacing *(in)*
Single Connection	16.04	1	0.0000

Bearing Stiffener Locations

Top Flange Deterioration

Width Loss *(%)*	Thickness Loss *(%)*	Start Distance *(ft)*	Length *(ft)*

	15.0	0.00	33.90

Bottom Flange Deterioration

Width Loss (%)	Thickness Loss (%)	Start Distance (ft)	Length (ft)
	5.0	0.00	33.90

Web Deterioration

Thickness Loss (%)	Start Distance (ft)	Length (ft)
5.0	0.00	33.90

Member Alternative As-Built

Description:

Description

Material Type: Steel
Girder Type: Rolled
Member units: US Customary
Girder property input method: Schedule based
Left end X: 5.0000 *(in)*
Right end X: 5.0000 *(in)*
Additional Self Load: *(kip/ft)*
Additional Self Load %: *(%)*

Analysis Module

Analysis Method: ASD
Analysis Module: AASHTO ASD
Analysis Module Component:
Properties:

Analysis Method: LFD
Analysis Module: AASHTO LFD
Analysis Module Component:
Properties:

Analysis Method: LRFD
Analysis Module: AASHTO LRFD
Analysis Module Component:
Properties:

Analysis Method: LRFR
Analysis Module: AASHTO LRFR
Analysis Module Component:
Properties:

Analysis Method: Distribution Factors
Analysis Module:
Analysis Module Component:
Properties:

Default rating method: LFD

Factors
Factor Override
LRFD:
LFD:
ASD Factors

	Inventory	Operating
Structural steel		
Concrete		
PS Concrete Comp.		
PS Concrete Tens.		
PS Moment Cap.		
Reinforcement		
Bearing Stiffener		
Stirrup		
Timber	NA	

Default Materials
Structural steel: AASHTO M 94(1961)
Deck concrete: 4000 psi
Deck reinforcement:
Welds:
Bolts:

Impact
Standard Impact Factor
Type: Standard - AASHTO
LRFD Dynamic Load Allowance
Fatigue and fracture limit states: 15.0 *(%)*
All other limit states: 33.0 *(%)*

Live Load Distribution
Standard

D i s t r i b u t i o n F a c t o r (Wheels)

Lanes Loaded	Shear	Shear at Supports	Moment	Deflection
1 Lane	1.267	0.907	1.267	0.286
Multi-Lane	1.267	0.907	1.267	0.771

Girder Profile

Shape
Shape: W 36x135
Distance: 0.00 *(ft)*
Length: 33.90 *(ft)*
Material: AASHTO M 94(1961)

Deck Profile

Deck Concrete

Material (LRFD)	Distance n	Length	Total Thickness	Structural Thickness	Effective Width (Std)	Effective Width
	(ft)	*(ft)*	*(in)*	*(in)*	*(in)*	*(in)*
4000 psi	0.00	33.90		8.0000	73.8582	73.8582

Shear Connectors

Start Distance	Length	Connector Name	Number per Row	Number of Spaces	Transverse Spacing
(ft)	*(ft)*				*(in)*
0.00	33.90	Composite			

Haunch Profile

Haunch Type: Flange edges

Embedded flange: FALSE

Distance	Length	Z1	Z2	Z3	Z4	Y1	Y2
(ft)	*(ft)*	*(in)*	*(in)*	*(in)*	*(in)*	*(in)*	*(in)*
0.00	33.90	0.0000	0.0000	0.0000	0.0000	3.2500	3.2500

Bracing Ranges

Lateral Support

Distance	Length
(ft)	*(ft)*
0.00	33.90

Stiffener Ranges

Transverse Stiffener Ranges (Location)

Name	Distance	Number	Spacing
	(ft)		*(in)*
Single Connection	16.04	1	0.0000

Bearing Stiffener Locations

Top Flange Deterioration

Width Loss	Thickness Loss	Start Distance	Length
(%)	*(%)*	*(ft)*	*(ft)*
	15.0	0.00	33.90

Bottom Flange Deterioration

Width Loss	Thickness Loss	Start Distance	Length
(%)	*(%)*	*(ft)*	*(ft)*

Member G2 (S2 plan designation)

Link with: None

Description:

Existing: 5% Section Loss -
Current: 5% Section Loss -
Number of Spans: 1

Span Number	Span Length *(ft)*
1	33.900000

Support	Frame Connection
1	
2	

Pedestrian load: 0.000 *(lb/ft)*

Member Loads

Member Loads - Settlement

Support Number	Horizontal *(in)*	Vertical *(in)*	Rotational *(Radians)*	Load Case Name
1				
2				

Support Constraints

General

Support Number	Support Type	X Translation	Y Translation	Z Rotation
1	Pinned	Fixed	Fixed	Free
2	Roller	Free	Fixed	Free

Elastic

Support Number	X Translation *(kip/ft)*	Y Translation *(kip/ft)*	Z Rotation *(kip-in/rad)*	Override Computed Z Rotation
1				
2				

Member Alternative 5% Section Loss

Description:

Description

Material Type: Steel
Girder Type: Rolled
Member units: US Customary
Girder property input method: Schedule based
Left end X: 5.0000 *(in)*
Right end X: 5.0000 *(in)*
Additional Self Load: *(kip/ft)*
Additional Self Load %: *(%)*

Analysis Module

Analysis Method: ASD
Analysis Module: AASHTO ASD
Analysis Module Component:

Properties:

Analysis Method: LFD
Analysis Module: AASHTO LFD
Analysis Module Component:
Properties:

Analysis Method: LRFD
Analysis Module: AASHTO LRFD
Analysis Module Component:
Properties:

Analysis Method: LRFR
Analysis Module: AASHTO LRFR
Analysis Module Component:
Properties:

Analysis Method: Distribution Factors
Analysis Module:
Analysis Module Component:
Properties:

Default rating method: LFD

Factors
Factor Override
LRFD:
LFD:
ASD Factors

	Inventory	Operating
Structural steel		
Concrete		
PS Concrete Comp.		
PS Concrete Tens.		
PS Moment Cap.		
Reinforcement		
Bearing Stiffener		
Stirrup		
Timber	NA	

Default Materials
Structural steel: AASHTO M 94(1961)
Deck concrete: 4000 psi
Deck reinforcement:
Welds:
Bolts:

Impact
Standard Impact Factor

Type:	Standard - AASHTO
LRFD Dynamic Load Allowance	
Fatigue and fracture limit states:	15.0 *(%)*
All other limit states:	33.0 *(%)*

Live Load Distribution

Standard

Distribution Factor (Wheels)

Lanes Loaded	Shear	Shear at Supports	Moment	Deflection
1 Lane	1.059	1.191	1.059	0.286
Multi-Lane	1.348	1.642	1.348	0.771

Girder Profile

Shape

Shape:	W 33x118
Distance:	0.00 *(ft)*
Length:	33.90 *(ft)*
Material:	AASHTO M 94(1961)

Deck Profile

Deck Concrete

Material (LRFD)	Distance	Length	Total Thickness	Structural Thickness	Effective Width (Std)	Effective Width
	(ft)	*(ft)*	*(in)*	*(in)*	*(in)*	*(in)*
4000 psi	0.00	33.90		8.0000	90.0000	90.0000

Shear Connectors

Start Distance *(ft)*	Length *(ft)*	Connector Name	Number per Row	Number of Spaces	Transverse Spacing *(in)*
0.00	33.90	Composite			

Haunch Profile

Haunch Type:	Flange edges
Embedded flange:	FALSE

Distance *(ft)*	Length *(ft)*	Z1 *(in)*	Z2 *(in)*	Y1 *(in)*
0.00	33.90	0.0000	0.0000	3.2500

Bracing Ranges

Lateral Support

Distance *(ft)*	Length *(ft)*
0.00	33.90

Stiffener Ranges

Transverse Stiffener Ranges (Location)

Name	Distance (ft)	Number	Spacing (in)
Single Connection	16.04	1	0.0000
Single Connection	17.20	1	0.0000

Bearing Stiffener Locations

Top Flange Deterioration

Width Loss (%)	Thickness Loss (%)	Start Distance (ft)	Length (ft)
	5.0	0.00	33.90

Bottom Flange Deterioration

Width Loss (%)	Thickness Loss (%)	Start Distance (ft)	Length (ft)
	5.0	0.00	33.90

Web Deterioration

Thickness Loss (%)	Start Distance (ft)	Length (ft)
5.0	0.00	33.90

Member Alternative As-Built

Description:

Description

Material Type: Steel
Girder Type: Rolled
Member units: US Customary
Girder property input method: Schedule based
Left end X: 5.0000 *(in)*
Right end X: 5.0000 *(in)*
Additional Self Load: *(kip/ft)*
Additional Self Load %: *(%)*

Analysis Module

Analysis Method: ASD
Analysis Module: AASHTO ASD
Analysis Module Component:
Properties:

Analysis Method: LFD
Analysis Module: AASHTO LFD
Analysis Module Component:
Properties:

Analysis Method: LRFD
Analysis Module: AASHTO LRFD

Analysis Module Component:
Properties:

Analysis Method: LRFR
Analysis Module: AASHTO LRFR
Analysis Module Component:
Properties:

Analysis Method: Distribution Factors
Analysis Module:
Analysis Module Component:
Properties:

Default rating method: LFD

Factors
Factor Override
LRFD:
LFD:
ASD Factors

	Inventory	Operating
Structural steel		
Concrete		
PS Concrete Comp.		
PS Concrete Tens.		
PS Moment Cap.		
Reinforcement		
Bearing Stiffener		
Stirrup		
Timber	NA	

Default Materials
Structural steel: AASHTO M 94(1961)
Deck concrete: 4000 psi
Deck reinforcement:
Welds:
Bolts:

Impact
Standard Impact Factor
Type: Standard - AASHTO
LRFD Dynamic Load Allowance
Fatigue and fracture limit states: 15.0 *(%)*
All other limit states: 33.0 *(%)*

Live Load Distribution
Standard

	Distribution Factor (Wheels)	
Lanes		Shear at

Loaded	Shear	Supports	Moment	Deflection
1 Lane	1.059	1.191	1.059	0.286
Multi-Lane	1.348	1.642	1.348	0.771

Girder Profile

Shape

Shape:	W 33x118
Distance:	0.00 *(ft)*
Length:	33.90 *(ft)*
Material:	AASHTO M 94(1961)

Deck Profile

Deck Concrete

Material (LRFD)	Distance n *(ft)*	Length *(ft)*	Total Thickness *(in)*	Structural Thickness *(in)*	Effective Width (Std) *(in)*	Effective Width *(in)*
4000 psi	0.00	33.90		8.0000	90.0000	90.0000

Shear Connectors

Start Distance *(ft)*	Length *(ft)*	Connector Name	Number per Row	Number of Spaces	Transverse Spacing *(in)*
0.00	33.90	Composite			

Haunch Profile

Haunch Type:	Flange edges
Embedded flange:	FALSE

Distance *(ft)*	Length *(ft)*	Z1 *(in)*	Z2 *(in)*	Y1 *(in)*
0.00	33.90	0.0000	0.0000	3.2500

Bracing Ranges

Lateral Support

Distance *(ft)*	Length *(ft)*
0.00	33.90

Stiffener Ranges

Transverse Stiffener Ranges (Location)

Name	Distance *(ft)*	Number	Spacing *(in)*
Single Connection	16.04	1	0.0000
Single Connection	17.20	1	0.0000

Bearing Stiffener Locations

Member G3

Link with: G2 (S2 plan designation)
Description:

Existing:
Current:
Number of Spans: 1

Span Number	Span Length *(ft)*
1	33.900000

Support	Frame Connection
1	
2	

Pedestrian load: *(lb/ft)*

Member G4

Link with: G2 (S2 plan designation)
Description:

Existing:
Current:
Number of Spans: 1

Span Number	Span Length *(ft)*
1	33.900000

Support	Frame Connection
1	
2	

Pedestrian load: *(lb/ft)*

Member G5

Link with: G2 (S2 plan designation)
Description:

Existing:
Current:
Number of Spans: 1

Span Number	Span Length *(ft)*
1	33.900000

Support	Frame Connection
1	

2

Pedestrian load: *(lb/ft)*

Member G6 (S2 plan designation)

Link with: None
Description:

Existing: 5% Section Loss -
Current: 5% Section Loss -
Number of Spans: 1

Span Number	Span Length *(ft)*
1	33.900000

Support	Frame Connection
1	
2	

Pedestrian load: 0.000 *(lb/ft)*

Member Loads

Member Loads - Settlement

Support Number	Horizontal *(in)*	Vertical *(in)*	Rotational *(Radians)*	Load Case Name
1				
2				

Support Constraints

General

Support Number	Support Type	X Translation	Y Translation	Z Rotation
1	Pinned	Fixed	Fixed	Free
2	Roller	Free	Fixed	Free

Elastic

Support Number	X Translation *(kip/ft)*	Y Translation *(kip/ft)*	Z Rotation *(kip-in/rad)*	Override Computed Z Rotation
1				
2				

Member Alternative 5% Section Loss

Description:
Description
Material Type: Steel
Girder Type: Rolled
Member units: US Customary
Girder property input method: Schedule based

Left end X: 5.0000 *(in)*
Right end X: 5.0000 *(in)*
Additional Self Load: *(kip/ft)*
Additional Self Load %: *(%)*
Analysis Module
Analysis Method: ASD
Analysis Module: AASHTO ASD
Analysis Module Component:
Properties:

Analysis Method: LFD
Analysis Module: AASHTO LFD
Analysis Module Component:
Properties:

Analysis Method: LRFD
Analysis Module: AASHTO LRFD
Analysis Module Component:
Properties:

Analysis Method: LRFR
Analysis Module: AASHTO LRFR
Analysis Module Component:
Properties:

Analysis Method: Distribution Factors
Analysis Module:
Analysis Module Component:
Properties:

Default rating method: LFD

Factors
Factor Override
LRFD:
LFD:
ASD Factors

	Inventory	Operating
Structural steel		
Concrete		
PS Concrete Comp.		
PS Concrete Tens.		
PS Moment Cap.		
Reinforcement		
Bearing Stiffener		
Stirrup		
Timber	NA	

Default Materials

Structural steel:	AASHTO M 94(1961)
Deck concrete:	4000 psi
Deck reinforcement:	
Welds:	
Bolts:	

Impact

Standard Impact Factor

Type:	Standard - AASHTO

LRFD Dynamic Load Allowance

Fatigue and fracture limit states:	15.0 *(%)*
All other limit states:	33.0 *(%)*

Live Load Distribution

Standard

Distribution Factor (Wheels)

Lanes Loaded	Shear	Shear at Supports	Moment	Deflection
1 Lane	1.059	1.191	1.059	0.286
Multi-Lane	1.348	1.649	1.348	0.771

Girder Profile

Shape

Shape:	W 33x118
Distance:	0.00 *(ft)*
Length:	33.90 *(ft)*
Material:	AASHTO M 94(1961)

Deck Profile

Deck Concrete

Material (LRFD)	Distance	Length	Total Thickness	Structural Thickness	Effective Width (Std)	Effective Width
	(ft)	*(ft)*	*(in)*	*(in)*	*(in)*	*(in)*
4000 psi	0.00	33.90		8.0000	90.0000	90.0000

Shear Connectors

Start Distance *(ft)*	Length *(ft)*	Connector Name	Number per Row	Number of Spaces	Transverse Spacing *(in)*
0.00	33.90	Composite			

Haunch Profile

Haunch Type:	Flange edges
Embedded flange:	FALSE

Distance *(ft)*	Length *(ft)*	Z1 *(in)*	Z2 *(in)*	Y1 *(in)*
0.00	33.90	0.0000	0.0000	3.2500

Bracing Ranges

Lateral Support

Distance	Length
(ft)	*(ft)*
0.00	33.90

Stiffener Ranges

Transverse Stiffener Ranges (Location)

Name	Distance	Number	Spacing
	(ft)		*(in)*
Single Connection	16.04	1	0.0000
Single Connection	17.20	1	0.0000

Bearing Stiffener Locations

Top Flange Deterioration

Width Loss	Thickness Loss	Start Distance	Length
(%)	*(%)*	*(ft)*	*(ft)*
	15.0	0.00	33.90

Bottom Flange Deterioration

Width Loss	Thickness Loss	Start Distance	Length
(%)	*(%)*	*(ft)*	*(ft)*
	5.0	0.00	33.90

Web Deterioration

Thickness Loss	Start Distance	Length
(%)	*(ft)*	*(ft)*
5.0	0.00	33.90

Member Alternative As-Built

Description:

Description

Material Type: Steel
Girder Type: Rolled
Member units: US Customary
Girder property input method: Schedule based
Left end X: 5.0000 *(in)*
Right end X: 5.0000 *(in)*
Additional Self Load: *(kip/ft)*
Additional Self Load %: *(%)*

Analysis Module

Analysis Method: ASD
Analysis Module: AASHTO ASD
Analysis Module Component:
Properties:

Analysis Method: LFD
Analysis Module: AASHTO LFD
Analysis Module Component:
Properties:

Analysis Method: LRFD
Analysis Module: AASHTO LRFD
Analysis Module Component:
Properties:

Analysis Method: LRFR
Analysis Module: AASHTO LRFR
Analysis Module Component:
Properties:

Analysis Method: Distribution Factors
Analysis Module:
Analysis Module Component:
Properties:

Default rating method: LFD

Factors
Factor Override
LRFD:
LFD:
ASD Factors

	Inventory	Operating
Structural steel		
Concrete		
PS Concrete Comp.		
PS Concrete Tens.		
PS Moment Cap.		
Reinforcement		
Bearing Stiffener		
Stirrup		
Timber	NA	

Default Materials
Structural steel: AASHTO M 94(1961)
Deck concrete: 4000 psi
Deck reinforcement:
Welds:
Bolts:

Impact
Standard Impact Factor
Type: Standard - AASHTO

LRFD Dynamic Load Allowance

Fatigue and fracture limit states:	15.0 *(%)*
All other limit states:	33.0 *(%)*

Live Load Distribution

Standard

Distribution Factor (Wheels)

Lanes Loaded	Shear	Shear at Supports	Moment	Deflection
1 Lane	1.059	1.191	1.059	0.286
Multi-Lane	1.348	1.649	1.348	0.771

Girder Profile

Shape

Shape:	W 33x118
Distance:	0.00 *(ft)*
Length:	33.90 *(ft)*
Material:	AASHTO M 94(1961)

Deck Profile

Deck Concrete

Material (LRFD)	Distance n	Length	Total Thickness	Structural Thickness	Effective Width (Std)	Effective Width
	(ft)	*(ft)*	*(in)*	*(in)*	*(in)*	*(in)*
4000 psi	0.00	33.90		8.0000	90.0000	90.0000

Shear Connectors

Start Distance *(ft)*	Length *(ft)*	Connector Name	Number per Row	Number of Spaces	Transverse Spacing *(in)*
0.00	33.90	Composite			

Haunch Profile

Haunch Type:	Flange edges
Embedded flange:	FALSE

Distance *(ft)*	Length *(ft)*	Z1 *(in)*	Z2 *(in)*	Y1 *(in)*
0.00	33.90	0.0000	0.0000	3.2500

Bracing Ranges

Lateral Support

Distance *(ft)*	Length *(ft)*
0.00	33.90

Stiffener Ranges

Transverse Stiffener Ranges (Location)

Name	Distance (ft)	Number	Spacing (in)
Single Connection	16.04	1	0.0000
Single Connection	17.20	1	0.0000

Bearing Stiffener Locations

Top Flange Deterioration

Width Loss (%)	Thickness Loss (%)	Start Distance (ft)	Length (ft)
	15.0	0.00	33.90

Bottom Flange Deterioration

Width Loss (%)	Thickness Loss (%)	Start Distance (ft)	Length (ft)

Member G7 (S3 plan designation)

Link with: None
Description:

Existing: 5% Section Loss -
Current: 5% Section Loss -
Number of Spans: 1

Span Number	Span Length (ft)
1	33.900000

Support	Frame Connection
1	
2	

Pedestrian load: *(lb/ft)*

Member Loads

Member Loads - Settlement

Support Number	Horizontal (in)	Vertical (in)	Rotational (Radians)	Load Case Name
1				
2				

Support Constraints

General

Support Number	Support Type	X Translation	Y Translation	Z Rotation
1	Pinned	Fixed	Fixed	Free
2	Roller	Free	Fixed	Free

Elastic

Support Number	X Translation *(kip/ft)*	Y Translation *(kip/ft)*	Z Rotation *(kip-in/rad)*	Override Computed Z Rotation
1				
2				

Member Alternative 5% Section Loss

Description:

Description

Material Type: Steel
Girder Type: Rolled
Member units: US Customary
Girder property input method: Schedule based
Left end X: 5.0000 *(in)*
Right end X: 5.0000 *(in)*
Additional Self Load: *(kip/ft)*
Additional Self Load %: *(%)*

Analysis Module

Analysis Method: ASD
Analysis Module: AASHTO ASD
Analysis Module Component:
Properties:

Analysis Method: LFD
Analysis Module: AASHTO LFD
Analysis Module Component:
Properties:

Analysis Method: LRFD
Analysis Module: AASHTO LRFD
Analysis Module Component:
Properties:

Analysis Method: LRFR
Analysis Module: AASHTO LRFR
Analysis Module Component:
Properties:

Analysis Method: Distribution Factors
Analysis Module:
Analysis Module Component:
Properties:

Default rating method: LFD

Factors

Factor Override

LRFD:
LFD:

ASD Factors

	Inventory	Operating
Structural steel		
Concrete		
PS Concrete Comp.		
PS Concrete Tens.		
PS Moment Cap.		
Reinforcement		
Bearing Stiffener		
Stirrup		
Timber	NA	

Default Materials

Structural steel:	AASHTO M 94(1961)
Deck concrete:	4000 psi
Deck reinforcement:	
Welds:	
Bolts:	

Impact

Standard Impact Factor

Type:	Standard - AASHTO

LRFD Dynamic Load Allowance

Fatigue and fracture limit states:	15.0 *(%)*
All other limit states:	33.0 *(%)*

Live Load Distribution

Standard

	Distribution Factor (Wheels)			
Lanes Loaded	Shear	Shear at Supports	Moment	Deflection
1 Lane	1.267	0.921	1.267	0.286
Multi-Lane	1.267	0.921	1.267	0.771

Girder Profile

Shape

Shape:	W 33x118
Distance:	0.00 *(ft)*
Length:	33.90 *(ft)*
Material:	AASHTO M 94(1961)

Deck Profile

Deck Concrete

Material (LRFD)	Distance	Length	Total Thickness	Structural Thickness	Effective Width (Std)	Effective Width
	(ft)	*(ft)*	*(in)*	*(in)*	*(in)*	*(in)*
4000 psi	0.00	33.90		8.0000	75.0000	75.0000

Shear Connectors

Start Distance (ft)	Length (ft)	Connector Name	Number per Row	Number of Spaces	Transverse Spacing (in)
0.00	33.90	Composite			

Haunch Profile

Haunch Type: Flange edges
Embedded flange: FALSE

Distance (ft)	Length (ft)	Z1 (in)	Z2 (in)	Z3 (in)	Z4 (in)	Y1 (in)	Y2 (in)
0.00	33.90	0.0000	0.0000	0.0000	0.0000	3.2500	3.2500

Bracing Ranges

Lateral Support

Distance (ft)	Length (ft)
0.00	33.90

Stiffener Ranges

Transverse Stiffener Ranges (Location)

Name	Distance (ft)	Number	Spacing (in)
Single Connection	17.20	1	0.0000

Bearing Stiffener Locations

Top Flange Deterioration

Width Loss (%)	Thickness Loss (%)	Start Distance (ft)	Length (ft)
	50.0	0.00	3.00
	15.0	3.00	22.44
	20.0	25.44	8.46

Bottom Flange Deterioration

Width Loss (%)	Thickness Loss (%)	Start Distance (ft)	Length (ft)
	5.0	0.00	33.90

Web Deterioration

Thickness Loss (%)	Start Distance (ft)	Length (ft)
5.0	0.00	33.90

Member Alternative **As-Built**

Description:

Description

Material Type:	Steel
Girder Type:	Rolled
Member units:	US Customary
Girder property input method:	Schedule based
Left end X:	5.0000 *(in)*
Right end X:	5.0000 *(in)*
Additional Self Load:	*(kip/ft)*
Additional Self Load %:	*(%)*

Analysis Module

Analysis Method:	ASD
Analysis Module:	AASHTO ASD
Analysis Module Component:	
Properties:	

Analysis Method:	LFD
Analysis Module:	AASHTO LFD
Analysis Module Component:	
Properties:	

Analysis Method:	LRFD
Analysis Module:	AASHTO LRFD
Analysis Module Component:	
Properties:	

Analysis Method:	LRFR
Analysis Module:	AASHTO LRFR
Analysis Module Component:	
Properties:	

Analysis Method:	Distribution Factors
Analysis Module:	
Analysis Module Component:	
Properties:	

Default rating method: LFD

Factors

Factor Override

LRFD:

LFD:

ASD Factors

	Inventory	Operating
Structural steel		
Concrete		
PS Concrete Comp.		
PS Concrete Tens.		
PS Moment Cap.		
Reinforcement		
Bearing Stiffener		

Stirrup	
Timber	NA

Default Materials

Structural steel:	AASHTO M 94(1961)
Deck concrete:	4000 psi
Deck reinforcement:	
Welds:	
Bolts:	

Impact

Standard Impact Factor

Type:	Standard - AASHTO

LRFD Dynamic Load Allowance

Fatigue and fracture limit states:	15.0 *(%)*
All other limit states:	33.0 *(%)*

Live Load Distribution

Standard

Distribution Factor (Wheels)

Lanes Loaded	Shear	Shear at Supports	Moment	Deflection
1 Lane	1.267	0.921	1.267	0.286
Multi-Lane	1.267	0.921	1.267	0.771

Girder Profile

Shape

Shape:	W 33x118
Distance:	0.00 *(ft)*
Length:	33.90 *(ft)*
Material:	AASHTO M 94(1961)

Deck Profile

Deck Concrete

Material (LRFD)	Distance *(ft)*	Length *(ft)*	Total Thickness *(in)*	Structural Thickness *(in)*	Effective Width (Std) *(in)*	Effective Width *(in)*
4000 psi	0.00	33.90		8.0000	75.0000	75.0000

Shear Connectors

Start Distance *(ft)*	Length *(ft)*	Connector Name	Number per Row	Number of Spaces	Transverse Spacing *(in)*
0.00	33.90	Composite			

Haunch Profile

Haunch Type:	Flange edges

Embedded flange: FALSE

Distance (ft)	Length (ft)	Z1 (in)	Z2 (in)	Z3 (in)	Z4 (in)	Y1 (in)	Y2 (in)
0.00	33.90	0.0000	0.0000	0.0000	0.0000	3.2500	3.2500

Bracing Ranges

Lateral Support

Distance (ft)	Length (ft)
0.00	33.90

Stiffener Ranges

Transverse Stiffener Ranges (Location)

Name	Distance (ft)	Number	Spacing (in)
Single Connection	17.20	1	0.0000

Bearing Stiffener Locations

Top Flange Deterioration

Width Loss (%)	Thickness Loss (%)	Start Distance (ft)	Length (ft)
	50.0	0.00	3.00
	15.0	3.00	22.44
	20.0	25.44	8.46

Bottom Flange Deterioration

Width Loss (%)	Thickness Loss (%)	Start Distance (ft)	Length (ft)

Superstructure Definition Span 2 (SB)

Definition

Units: US Customary

Number of spans: 1

Number of girders: 7

Span	Length (ft)
1	63.6770

Frame Structure Simplified Definition:

Support	Frame Connection
1	
2	

Girder Spacing Display Type: Along Support

Average Humidity: 70.000 (%)

Analysis

Default Library Factors

Factor Override

Analysis Module
Analysis Method: ASD
Analysis Module:
Analysis Module Component:
Properties:

Analysis Method: LFD
Analysis Module:
Analysis Module Component:
Properties:

Analysis Method: LRFD
Analysis Module:
Analysis Module Component:
Properties:

Analysis Method: LRFR
Analysis Module:
Analysis Module Component:
Properties:

Analysis Method: Distribution Factors
Analysis Module:
Analysis Module Component:
Properties:

Default rating method: LFD

Impact
Standard Impact Factor
Type: Standard - AASHTO
LRFD Dynamic Load Allowance
Fatigue and fracture limit states: 15.0 *(%)*
All other limit states: 33.0 *(%)*

Structure Framing Plan Details
Layout

Support	Skew *(Degrees)*
1	8.5000
2	8.5000

Girder Spacing Orientation: Along Support

Girder Bay	Girder Spacing Start *(ft)*	End *(ft)*
1	7.5000	7.5000
2	7.5000	7.5000
3	7.5000	7.5000
4	7.5000	7.5000

5	7.5000	7.5000
6	7.5000	7.5000

Diaphragms

Girder Bay 1

Distance Left Girder *(ft)*	Distance Right Girder *(ft)*	Diaphragm Spacing *(ft)*	Number of Spaces	Diaphragm Weight *(kip)*
0.00	0.00	0.00	1	0.2700
19.84	20.95	21.92	1	0.3200
19.84	20.95	0.00	1	0.3200
63.68	63.68	0.00	1	0.2700

Girder Bay 2

Distance Left Girder *(ft)*	Distance Right Girder *(ft)*	Diaphragm Spacing *(ft)*	Number of Spaces	Diaphragm Weight *(kip)*
0.00	0.00	0.00	1	0.2700
19.84	20.95	21.92	1	0.3200
19.84	20.95	0.00	1	0.3200
63.68	63.68	0.00	1	0.2700

Girder Bay 3

Distance Left Girder *(ft)*	Distance Right Girder *(ft)*	Diaphragm Spacing *(ft)*	Number of Spaces	Diaphragm Weight *(kip)*
0.00	0.00	0.00	1	0.2700
19.84	20.95	21.92	1	0.3200
19.84	20.95	0.00	1	0.3200
63.68	63.68	0.00	1	0.2700

Girder Bay 4

Distance Left Girder *(ft)*	Distance Right Girder *(ft)*	Diaphragm Spacing *(ft)*	Number of Spaces	Diaphragm Weight *(kip)*
0.00	0.00	0.00	1	0.2700
19.84	20.95	0.00	1	0.3200
19.84	20.95	21.92	1	0.3200
63.68	63.68	0.00	1	0.2700

Girder Bay 5

Distance Left Girder *(ft)*	Distance Right Girder *(ft)*	Diaphragm Spacing *(ft)*	Number of Spaces	Diaphragm Weight *(kip)*
0.00	0.00	0.00	1	0.2700
19.84	20.95	21.92	1	0.3200
19.84	20.95	0.00	1	0.3200
63.68	63.68	0.00	1	0.2700

Girder Bay 6

Distance Left Girder *(ft)*	Distance Right Girder *(ft)*	Diaphragm Spacing *(ft)*	Number of Spaces	Diaphragm Weight *(kip)*
0.00	0.00	0.00	1	0.2700
19.84	20.95	21.92	1	0.3200
19.84	20.95	0.00	1	0.3200

63.68	63.68	0.00	1	0.2700

Structure Typical Section

Deck

Left start width: 24.67 *(ft)*
Left end width: 24.67 *(ft)*
Right start width: 24.74 *(ft)*
Right end width: 24.74 *(ft)*
Left start overhang: 2.42 *(ft)*
Left end overhang: 2.42 *(ft)*

Deck (Cont'd)

Deck concrete: 4000 psi
Total deck thickness: 8.5000 *(in)*
Deck crack control parameter: *(kip/in)*
Sustained modular ratio factor: 3.000

Parapet

Name	Load Case	Measure To	Measured From	Distance At Start	Distance At End	Front Face Orientation
Single-Sl...	Concret...	Back	Left Ed...			Right
Single-Sl...	Concret...	Back	Right E...			Left

Lane Position

Offset Left Start: -23.17 *(ft)*
Offset Left End: -23.17 *(ft)*
Offset Right Start: 23.24 *(ft)*
Offset Right End: 23.24 *(ft)*

Wearing Surface

Wearing surface material:
Description:
Wearing surface thickness: *(in)*
Wearing surface density: *(pcf)*
Load case:

Load Case Description

Load Case Name	Description	Stage	Type	Time *(Days)*
Concrete Deck		Non-composite (Sta...	D,DC	
parapet+sidewalk		Composite (long te...	D,DC	
utilities		Composite (long te...	D,DW	
wearing surface		Composite (long te...	D,DC	

Superstructure Loads

DL Distribution

Stage 1 Dead Load Distribution: Tributary Area
Stage 2 Dead Load Distribution: Uniformly to All Girders

Stiffener Definitions

Transverse Stiffeners

Name:	Single Connection
Stiffener number:	Single
Plate Width:	7.0000 *(in)*
Plate Thickness:	0.4375 *(in)*
Material:	AASHTO M 94(1961)
Top Gap:	*(in)*
Bottom Gap:	*(in)*
Top Weld:	
Web Weld:	
Bottom Weld:	

Name:	Double Connection
Stiffener number:	Pair
Plate Width:	7.0000 *(in)*
Plate Thickness:	0.4375 *(in)*
Material:	AASHTO M 94(1961)
Top Gap:	*(in)*
Bottom Gap:	*(in)*
Top Weld:	
Web Weld:	
Bottom Weld:	

No prestress stress limits.

No prestress properties.

No vertical shear reinforcement definitions.

No horizontal shear reinforcement definitions.

Member G1 (S7 plan designation)

Link with: None
Description:

Existing: 5% Section Loss -
Current: 5% Section Loss -
Number of Spans: 1

Span Number	Span Length *(ft)*
1	63.677000

Support	Frame Connection
1	
2	

Pedestrian load: *(lb/ft)*

Member Loads

Member Loads - Settlement

Support Number	Horizontal *(in)*	Vertical *(in)*	Rotational *(Radians)*	Load Case Name
1				
2				

Support Constraints

General

Support Number	Support Type	X Translation	Y Translation	Z Rotation
1	Pinned	Fixed	Fixed	Free
2	Roller	Free	Fixed	Free

Elastic

Support Number	X Translation *(kip/ft)*	Y Translation *(kip/ft)*	Z Rotation *(kip-in/rad)*	Override Computed Z Rotation
1				
2				

Member Alternative As-Built

Description:

Description

Material Type: Steel
Girder Type: Rolled
Member units: US Customary
Girder property input method: Schedule based
Left end X: 5.0000 *(in)*
Right end X: 5.0000 *(in)*
Additional Self Load: *(kip/ft)*
Additional Self Load %: *(%)*

Analysis Module

Analysis Method: ASD
Analysis Module: AASHTO ASD
Analysis Module Component:
Properties:

Analysis Method: LFD
Analysis Module: AASHTO LFD
Analysis Module Component:
Properties:

Analysis Method: LRFD
Analysis Module: AASHTO LRFD
Analysis Module Component:
Properties:

Analysis Method: LRFR
Analysis Module: AASHTO LRFR
Analysis Module Component:
Properties:

Analysis Method: Distribution Factors
Analysis Module:
Analysis Module Component:
Properties:

Default rating method: LFD

Factors
Factor Override
LRFD:
LFD:
ASD Factors

	Inventory	Operating
Structural steel		
Concrete		
PS Concrete Comp.		
PS Concrete Tens.		
PS Moment Cap.		
Reinforcement		
Bearing Stiffener		
Stirrup		
Timber	NA	

Default Materials
Structural steel: AASHTO M 94(1961)
Deck concrete: 4000 psi
Deck reinforcement:
Welds:
Bolts:

Impact
Standard Impact Factor
Type: Standard - AASHTO
LRFD Dynamic Load Allowance
Fatigue and fracture limit states: 15.0 *(%)*
All other limit states: 33.0 *(%)*

Live Load Distribution
Standard

D i s t r i b u t i o n F a c t o r (Wheels)

Lanes Loaded	Shear	Shear at Supports	Moment	Deflection
1 Lane	1.277	0.921	1.277	0.286
Multi-Lane	1.277	0.921	1.277	0.771

Girder Profile

Shape

Shape: W 36x135
Distance: 0.00 *(ft)*
Length: 63.68 *(ft)*
Material: AASHTO M 94(1961)

Flange Cover Plates

Plate	Begin Width *(in)*	End Width *(in)*	Thickness *(in)*	Distance *(ft)*	Length *(ft)*	Material	
1 (Bot...		16.000...	16.000...	0.7500	0.00	63.68	AASHTO M ...

Deck Profile

Deck Concrete

Material (LRFD)	Distance n *(ft)*	Length *(ft)*	Total Thickness *(in)*	Structural Thickness *(in)*	Effective Width (Std) *(in)*	Effective Width *(in)*
4000 psi	0.00	63.68		8.0000	74.0004	74.0004

Shear Connectors

Start Distance *(ft)*	Length *(ft)*	Connector Name	Number per Row	Number of Spaces	Transverse Spacing *(in)*
0.00	63.68	Composite			

Haunch Profile

Haunch Type: Flange edges
Embedded flange: FALSE

Distance *(ft)*	Length *(ft)*	Z1 *(in)*	Z2 *(in)*	Z3 *(in)*	Z4 *(in)*	Y1 *(in)*	Y2 *(in)*
0.00	63.68	0.0000	0.0000	0.0000	0.0000	3.2500	3.2500

Bracing Ranges

Lateral Support

Distance *(ft)*	Length *(ft)*
0.00	63.68

Stiffener Ranges

Transverse Stiffener Ranges (Location)

Name	Distance *(ft)*	Number	Spacing *(in)*
Single Connection	19.84	1	0.0000
Single Connection	41.76	1	0.0000

Bearing Stiffener Locations

Member Alternative 5% Section Loss

Description:

Description

Material Type:	Steel
Girder Type:	Rolled
Member units:	US Customary
Girder property input method:	Schedule based
Left end X:	5.0000 *(in)*
Right end X:	5.0000 *(in)*
Additional Self Load:	*(kip/ft)*
Additional Self Load %:	*(%)*

Analysis Module

Analysis Method:	ASD
Analysis Module:	AASHTO ASD
Analysis Module Component:	
Properties:	

Analysis Method:	LFD
Analysis Module:	AASHTO LFD
Analysis Module Component:	
Properties:	

Analysis Method:	LRFD
Analysis Module:	AASHTO LRFD
Analysis Module Component:	
Properties:	

Analysis Method:	LRFR
Analysis Module:	AASHTO LRFR
Analysis Module Component:	
Properties:	

Analysis Method:	Distribution Factors
Analysis Module:	
Analysis Module Component:	
Properties:	

Default rating method: LFD

Factors

Factor Override

LRFD:

LFD:

ASD Factors

	Inventory	Operating
Structural steel		
Concrete		
PS Concrete Comp.		
PS Concrete Tens.		
PS Moment Cap.		
Reinforcement		
Bearing Stiffener		

Stirrup
Timber NA

Default Materials

Structural steel: AASHTO M 94(1961)
Deck concrete: 4000 psi
Deck reinforcement:
Welds:
Bolts:

Impact

Standard Impact Factor
Type: Standard - AASHTO
LRFD Dynamic Load Allowance
Fatigue and fracture limit states: 15.0 *(%)*
All other limit states: 33.0 *(%)*

Live Load Distribution

Standard

D i s t r i b u t i o n F a c t o r (Wheels)

Lanes Loaded	Shear	Shear at Supports	Moment	Deflection
1 Lane	1.277	0.921	1.277	0.286
Multi-Lane	1.277	0.921	1.277	0.771

Girder Profile

Shape

Shape: W 36x135
Distance: 0.00 *(ft)*
Length: 63.68 *(ft)*
Material: AASHTO M 94(1961)

Flange Cover Plates

Plate	Begin Width *(in)*	End Width *(in)*	Thickness *(in)*	Distance *(ft)*	Length *(ft)*	Material	
1 (Bot...		16.000...	16.000...	0.7500	0.00	63.68	AASHTO M ...

Deck Profile

Deck Concrete

Material (LRFD)	Distance n *(ft)*	Length *(ft)*	Total Thickness *(in)*	Structural Thickness *(in)*	Effective Width (Std) *(in)*	Effective Width *(in)*
4000 psi	0.00	63.68		8.0000	74.0004	74.0004

Shear Connectors

Start	Connector	Number	Number of	Transverse

Distance (ft)	Length (ft)	Name	per Row	Spaces	Spacing (in)
0.00	63.68	Composite			

Haunch Profile

Haunch Type: Flange edges
Embedded flange: FALSE

Distance (ft)	Length (ft)	Z1 (in)	Z2 (in)	Z3 (in)	Z4 (in)	Y1 (in)	Y2 (in)
0.00	63.68	0.0000	0.0000	0.0000	0.0000	3.2500	3.2500

Bracing Ranges

Lateral Support

Distance (ft)	Length (ft)
0.00	63.68

Stiffener Ranges

Transverse Stiffener Ranges (Location)

Name	Distance (ft)	Number	Spacing (in)
Single Connection	19.84	1	0.0000
Single Connection	41.76	1	0.0000

Bearing Stiffener Locations

Top Flange Deterioration

Width Loss (%)	Thickness Loss (%)	Start Distance (ft)	Length (ft)
	5.0	0.00	63.68

Bottom Flange Deterioration

Width Loss (%)	Thickness Loss (%)	Start Distance (ft)	Length (ft)
	5.0	0.00	63.68

Web Deterioration

Thickness Loss (%)	Start Distance (ft)	Length (ft)
5.0	0.00	63.68

Member G2 (S8 plan designation)

Link with: None
Description:

Existing: 5% Section Loss -
Current: 5% Section Loss -

Number of Spans: 1

Span Number	Span Length *(ft)*
1	63.677000

Support	Frame Connection
1	
2	

Pedestrian load: 0.000 *(lb/ft)*

Member Loads

Member Loads - Settlement

Support Number	Horizontal *(in)*	Vertical *(in)*	Rotational *(Radians)*	Load Case Name
1				
2				

Support Constraints

General

Support Number	Support Type	X Translation	Y Translation	Z Rotation
1	Pinned	Fixed	Fixed	Free
2	Roller	Free	Fixed	Free

Elastic

Support Number	X Translation *(kip/ft)*	Y Translation *(kip/ft)*	Z Rotation *(kip-in/rad)*	Override Computed Z Rotation
1				
2				

Member Alternative As-Built

Description:

Description

Material Type: Steel
Girder Type: Rolled
Member units: US Customary
Girder property input method: Schedule based
Left end X: 5.0000 *(in)*
Right end X: 5.0000 *(in)*
Additional Self Load: *(kip/ft)*
Additional Self Load %: *(%)*

Analysis Module

Analysis Method: ASD
Analysis Module: AASHTO ASD
Analysis Module Component:
Properties:

Analysis Method: LFD
Analysis Module: AASHTO LFD
Analysis Module Component:
Properties:

Analysis Method: LRFD
Analysis Module: AASHTO LRFD
Analysis Module Component:
Properties:

Analysis Method: LRFR
Analysis Module: AASHTO LRFR
Analysis Module Component:
Properties:

Analysis Method: Distribution Factors
Analysis Module:
Analysis Module Component:
Properties:

Default rating method: LFD

Factors
Factor Override
LRFD:
LFD:
ASD Factors

	Inventory	Operating
Structural steel		
Concrete		
PS Concrete Comp.		
PS Concrete Tens.		
PS Moment Cap.		
Reinforcement		
Bearing Stiffener		
Stirrup		
Timber	NA	

Default Materials
Structural steel: AASHTO M 94(1961)
Deck concrete: 4000 psi
Deck reinforcement:
Welds:
Bolts:

Impact
Standard Impact Factor
Type: Standard - AASHTO
LRFD Dynamic Load Allowance

Fatigue and fracture limit states:	15.0 *(%)*
All other limit states:	33.0 *(%)*

Live Load Distribution

Standard

Distribution Factor (Wheels)

Lanes Loaded	Shear	Shear at Supports	Moment	Deflection
1 Lane	1.060	1.191	1.060	0.286
Multi-Lane	1.349	1.650	1.349	0.771

Girder Profile

Shape

Shape:	W 36x150
Distance:	0.00 *(ft)*
Length:	63.68 *(ft)*
Material:	AASHTO M 94(1961)

Flange Cover Plates

Plate	Begin Width *(in)*	End Width *(in)*	Thickness *(in)*	Distance *(ft)*	Length *(ft)*	Material	
1 (Bot...		16.000...	16.000...	0.7500	8.34	47.00	AASHTO M ...

Deck Profile

Deck Concrete

Material (LRFD)	Distance n *(ft)*	Length *(ft)*	Total Thickness *(in)*	Structural Thickness *(in)*	Effective Width (Std) *(in)*	Effective Width *(in)*
4000 psi	0.00 7.10...	63.68		8.0000	89.0328	89.0328

Shear Connectors

Start Distance *(ft)*	Length *(ft)*	Connector Name	Number per Row	Number of Spaces	Transverse Spacing *(in)*
0.00	63.68	Composite			

Haunch Profile

Haunch Type:	Flange edges
Embedded flange:	FALSE

Distance *(ft)*	Length *(ft)*	Z1 *(in)*	Z2 *(in)*	Y1 *(in)*
0.00	63.68	0.0000	0.0000	3.2500

Bracing Ranges

Lateral Support

Distance	Length

(ft)	*(ft)*
0.00	63.68

Stiffener Ranges

Transverse Stiffener Ranges (Location)

Name	Distance *(ft)*	Number	Spacing *(in)*
Single Connection	19.84	1	0.0000
Single Connection	20.95	1	0.0000
Single Connection	41.76	1	0.0000
Single Connection	42.87	1	0.0000

Bearing Stiffener Locations

Member Alternative 5% Section Loss

Description:

Description

Material Type: Steel
Girder Type: Rolled
Member units: US Customary
Girder property input method: Schedule based
Left end X: 5.0000 *(in)*
Right end X: 5.0000 *(in)*
Additional Self Load: *(kip/ft)*
Additional Self Load %: *(%)*

Analysis Module

Analysis Method: ASD
Analysis Module: AASHTO ASD
Analysis Module Component:
Properties:

Analysis Method: LFD
Analysis Module: AASHTO LFD
Analysis Module Component:
Properties:

Analysis Method: LRFD
Analysis Module: AASHTO LRFD
Analysis Module Component:
Properties:

Analysis Method: LRFR
Analysis Module: AASHTO LRFR
Analysis Module Component:
Properties:

Analysis Method: Distribution Factors
Analysis Module:
Analysis Module Component:

Properties:

Default rating method: LFD

Factors
Factor Override
LRFD:
LFD:
ASD Factors

	Inventory	Operating
Structural steel		
Concrete		
PS Concrete Comp.		
PS Concrete Tens.		
PS Moment Cap.		
Reinforcement		
Bearing Stiffener		
Stirrup		
Timber	NA	

Default Materials
Structural steel: AASHTO M 94(1961)
Deck concrete: 4000 psi
Deck reinforcement:
Welds:
Bolts:

Impact
Standard Impact Factor
Type: Standard - AASHTO
LRFD Dynamic Load Allowance
Fatigue and fracture limit states: 15.0 *(%)*
All other limit states: 33.0 *(%)*

Live Load Distribution
Standard

D i s t r i b u t i o n F a c t o r (Wheels)

Lanes Loaded	Shear	Shear at Supports	Moment	Deflection
1 Lane	1.060	1.191	1.060	0.286
Multi-Lane	1.349	1.650	1.349	0.771

Girder Profile

Shape
Shape: W 36x150
Distance: 0.00 *(ft)*
Length: 63.68 *(ft)*
Material: AASHTO M 94(1961)

Flange Cover Plates

Plate	Begin Width (in)	End Width (in)	Thickness (in)	Distance (ft)	Length (ft)	Material	
1 (Bot...		16.000...	16.000...	0.7500	8.34	47.00	AASHTO M ...

Deck Profile

Deck Concrete

Material (LRFD)	Distance n (ft)	Length (ft)	Total Thickness (in)	Structural Thickness (in)	Effective Width (Std) (in)	Effective Width (in)
4000 psi	0.00 7.10...	63.68		8.0000	89.0328	89.0328

Shear Connectors

Start Distance (ft)	Length (ft)	Connector Name	Number per Row	Number of Spaces	Transverse Spacing (in)
0.00	63.68	Composite			

Haunch Profile

Haunch Type: Flange edges

Embedded flange: FALSE

Distance (ft)	Length (ft)	Z1 (in)	Z2 (in)	Y1 (in)
0.00	63.68	0.0000	0.0000	3.2500

Bracing Ranges

Lateral Support

Distance (ft)	Length (ft)
0.00	63.68

Stiffener Ranges

Transverse Stiffener Ranges (Location)

Name	Distance (ft)	Number	Spacing (in)
Single Connection	19.84	1	0.0000
Single Connection	20.95	1	0.0000
Single Connection	41.76	1	0.0000
Single Connection	42.87	1	0.0000

Bearing Stiffener Locations

Top Flange Deterioration

Width Loss (%)	Thickness Loss (%)	Start Distance (ft)	Length (ft)

5.0	0.00	63.68

Bottom Flange Deterioration

Width Loss *(%)*	Thickness Loss *(%)*	Start Distance *(ft)*	Length *(ft)*
	5.0	0.00	63.68

Web Deterioration

Thickness Loss *(%)*	Start Distance *(ft)*	Length *(ft)*
5.0	0.00	63.68

Member G3

Link with: G2 (S8 plan designation)
Description:

Existing:
Current:
Number of Spans: 1

Span Number	Span Length *(ft)*
1	63.677000

Support	Frame Connection
1	
2	

Pedestrian load: *(lb/ft)*

Member G4

Link with: G2 (S8 plan designation)
Description:

Existing:
Current:
Number of Spans: 1

Span Number	Span Length *(ft)*
1	63.677000

Support	Frame Connection
1	
2	

Pedestrian load: *(lb/ft)*

Member G5

Link with: G2 (S8 plan designation)
Description:

Existing:
Current:
Number of Spans: 1

Span Number	Span Length *(ft)*
1	63.677000

Support	Frame Connection
1	
2	

Pedestrian load: *(lb/ft)*

Member G6

Link with: G2 (S8 plan designation)
Description:

Existing:
Current:
Number of Spans: 1

Span Number	Span Length *(ft)*
1	63.677000

Support	Frame Connection
1	
2	

Pedestrian load: *(lb/ft)*

Member G7 (S9 plan designation)

Link with: None
Description:

Existing: 5% Section Loss -
Current: 5% Section Loss -
Number of Spans: 1

Span Number	Span Length *(ft)*
1	63.677000

Support	Frame Connection

1
2

Pedestrian load: *(lb/ft)*

Member Loads

Member Loads - Settlement

Support Number	Horizontal *(in)*	Vertical *(in)*	Rotational *(Radians)*	Load Case Name
1				
2				

Support Constraints

General

Support Number	Support Type	X Translation	Y Translation	Z Rotation
1	Pinned	Fixed	Fixed	Free
2	Roller	Free	Fixed	Free

Elastic

Support Number	X Translation *(kip/ft)*	Y Translation *(kip/ft)*	Z Rotation *(kip-in/rad)*	Override Computed Z Rotation
1				
2				

Member Alternative **As-Built**

Description:

Description

Material Type: Steel
Girder Type: Rolled
Member units: US Customary
Girder property input method: Schedule based
Left end X: 5.0000 *(in)*
Right end X: 5.0000 *(in)*
Additional Self Load: *(kip/ft)*
Additional Self Load %: *(%)*

Analysis Module

Analysis Method: ASD
Analysis Module: AASHTO ASD
Analysis Module Component:
Properties:

Analysis Method: LFD
Analysis Module: AASHTO LFD
Analysis Module Component:
Properties:

Analysis Method: LRFD
Analysis Module: AASHTO LRFD

Analysis Module Component:
Properties:

Analysis Method: LRFR
Analysis Module: AASHTO LRFR
Analysis Module Component:
Properties:

Analysis Method: Distribution Factors
Analysis Module:
Analysis Module Component:
Properties:

Default rating method: LFD

Factors
Factor Override
LRFD:
LFD:
ASD Factors

	Inventory	Operating
Structural steel		
Concrete		
PS Concrete Comp.		
PS Concrete Tens.		
PS Moment Cap.		
Reinforcement		
Bearing Stiffener		
Stirrup		
Timber	NA	

Default Materials
Structural steel: AASHTO M 94(1961)
Deck concrete: 4000 psi
Deck reinforcement:
Welds:
Bolts:

Impact
Standard Impact Factor
Type: Standard - AASHTO
LRFD Dynamic Load Allowance
Fatigue and fracture limit states: 15.0 *(%)*
All other limit states: 33.0 *(%)*

Live Load Distribution
Standard

	Distribution Factor (Wheels)	
Lanes		Shear at

Loaded	Shear	Supports	Moment	Deflection
1 Lane	1.277	0.921	1.277	0.286
Multi-Lane	1.277	0.921	1.277	0.771

Girder Profile

Shape

Shape:	W 36x150
Distance:	0.00 *(ft)*
Length:	63.68 *(ft)*
Material:	AASHTO M 94(1961)

Flange Cover Plates

Plate	Begin Width *(in)*	End Width *(in)*	Thickness *(in)*	Distance *(ft)*	Length *(ft)*	Material	
1 (Bot...		16.000...	16.000...	0.8750	7.84	48.00	AASHTO M ...

Deck Profile

Deck Concrete

Material (LRFD)	Distance n *(ft)*	Length *(ft)*	Total Thickness *(in)*	Structural Thickness *(in)*	Effective Width (Std) *(in)*	Effective Width *(in)*
4000 psi	0.00	63.68		8.0000	74.8800	74.8800

Shear Connectors

Start Distance *(ft)*	Length *(ft)*	Connector Name	Number per Row	Number of Spaces	Transverse Spacing *(in)*
0.00	63.68	Composite			

Haunch Profile

Haunch Type:	Flange edges
Embedded flange:	FALSE

Distance *(ft)*	Length *(ft)*	Z1 *(in)*	Z2 *(in)*	Z3 *(in)*	Z4 *(in)*	Y1 *(in)*	Y2 *(in)*
0.00	63.68	0.0000	0.0000	0.0000	0.0000	3.2500	3.2500

Bracing Ranges

Lateral Support

Distance *(ft)*	Length *(ft)*
0.00	63.68

Stiffener Ranges

Transverse Stiffener Ranges (Location)

Name	Distance *(ft)*	Number	Spacing *(in)*
Single Connection	20.95	1	0.0000

Single Connection	42.87	1	0.0000

Bearing Stiffener Locations

Member Alternative 5% Section Loss

Description:

Description

Material Type: Steel
Girder Type: Rolled
Member units: US Customary
Girder property input method: Schedule based
Left end X: 5.0000 *(in)*
Right end X: 5.0000 *(in)*
Additional Self Load: *(kip/ft)*
Additional Self Load %: *(%)*

Analysis Module

Analysis Method: ASD
Analysis Module: AASHTO ASD
Analysis Module Component:
Properties:

Analysis Method: LFD
Analysis Module: AASHTO LFD
Analysis Module Component:
Properties:

Analysis Method: LRFD
Analysis Module: AASHTO LRFD
Analysis Module Component:
Properties:

Analysis Method: LRFR
Analysis Module: AASHTO LRFR
Analysis Module Component:
Properties:

Analysis Method: Distribution Factors
Analysis Module:
Analysis Module Component:
Properties:

Default rating method: LFD

Factors

Factor Override

LRFD:
LFD:

ASD Factors

	Inventory	Operating

Structural steel	
Concrete	
PS Concrete Comp.	
PS Concrete Tens.	
PS Moment Cap.	
Reinforcement	
Bearing Stiffener	
Stirrup	
Timber	NA

Default Materials

Structural steel:	AASHTO M 94(1961)
Deck concrete:	4000 psi
Deck reinforcement:	
Welds:	
Bolts:	

Impact

Standard Impact Factor

Type:	Standard - AASHTO

LRFD Dynamic Load Allowance

Fatigue and fracture limit states:	15.0 *(%)*
All other limit states:	33.0 *(%)*

Live Load Distribution

Standard

Distribution Factor (Wheels)

Lanes Loaded	Shear	Shear at Supports	Moment	Deflection
1 Lane	1.277	0.921	1.277	0.286
Multi-Lane	1.277	0.921	1.277	0.771

Girder Profile

Shape

Shape:	W 36x150
Distance:	0.00 *(ft)*
Length:	63.68 *(ft)*
Material:	AASHTO M 94(1961)

Flange Cover Plates

Plate	Begin Width *(in)*	End Width *(in)*	Thickness *(in)*	Distance *(ft)*	Length *(ft)*	Material	
1 (Bot...		16.000...	16.000...	0.8750	7.84	48.00	AASHTO M ...

Deck Profile

Deck Concrete

	Total	Structural	Effective	Effective

Material (LRFD)	Distance n	Length	Thickness	Thickness	Width (Std)	Width
	(ft)	*(ft)*	*(in)*	*(in)*	*(in)*	*(in)*
4000 psi	0.00	63.68		8.0000	74.8800	74.8800

Shear Connectors

Start Distance *(ft)*	Length *(ft)*	Connector Name	Number per Row	Number of Spaces	Transverse Spacing *(in)*
0.00	63.68	Composite			

Haunch Profile

Haunch Type: Flange edges

Embedded flange: FALSE

Distance *(ft)*	Length *(ft)*	Z1 *(in)*	Z2 *(in)*	Z3 *(in)*	Z4 *(in)*	Y1 *(in)*	Y2 *(in)*
0.00	63.68	0.0000	0.0000	0.0000	0.0000	3.2500	3.2500

Bracing Ranges

Lateral Support

Distance *(ft)*	Length *(ft)*
0.00	63.68

Stiffener Ranges

Transverse Stiffener Ranges (Location)

Name	Distance *(ft)*	Number	Spacing *(in)*
Single Connection	20.95	1	0.0000
Single Connection	42.87	1	0.0000

Bearing Stiffener Locations

Top Flange Deterioration

Width Loss *(%)*	Thickness Loss *(%)*	Start Distance *(ft)*	Length *(ft)*
	5.0	0.00	63.68

Bottom Flange Deterioration

Width Loss *(%)*	Thickness Loss *(%)*	Start Distance *(ft)*	Length *(ft)*
	5.0	0.00	63.68

Web Deterioration

Thickness Loss *(%)*	Start Distance *(ft)*	Length *(ft)*
5.0	0.00	63.68

Superstructure Definition Span 3 (SB)

Definition

Units: US Customary
Number of spans: 1
Number of girders: 7

Span	Length *(ft)*
1	41.6500

Frame Structure Simplified Definition:

Support	Frame Connection
1	
2	

Girder Spacing Display Type: Along Support
Average Humidity: 70.000 *(%)*

Analysis

Default Library Factors
Factor Override
Analysis Module

Analysis Method: ASD
Analysis Module:
Analysis Module Component:
Properties:

Analysis Method: LFD
Analysis Module:
Analysis Module Component:
Properties:

Analysis Method: LRFD
Analysis Module:
Analysis Module Component:
Properties:

Analysis Method: LRFR
Analysis Module:
Analysis Module Component:
Properties:

Analysis Method: Distribution Factors
Analysis Module:
Analysis Module Component:
Properties:

Default rating method: LFD

Impact

Standard Impact Factor
Type: Standard - AASHTO

LRFD Dynamic Load Allowance

Fatigue and fracture limit states:	15.0 *(%)*
All other limit states:	33.0 *(%)*

Structure Framing Plan Details

Layout

Support	Skew *(Degrees)*
1	8.0000
2	8.0000

Girder Spacing Orientation: Along Support

Girder Bay	Girder Spacing Start *(ft)*	End *(ft)*
1	7.5000	7.5000
2	7.5000	7.5000
3	7.5000	7.5000
4	7.5000	7.5000
5	7.5000	7.5000
6	7.5000	7.5000

Diaphragms

Girder Bay 1

Distance Left Girder *(ft)*	Distance Right Girder *(ft)*	Diaphragm Spacing *(ft)*	Number of Spaces	Diaphragm Weight *(kip)*
0.00	0.00	0.00	1	0.2700
20.07	21.12	0.00	1	0.3200
41.65	41.65	0.00	1	0.2540

Girder Bay 2

Distance Left Girder *(ft)*	Distance Right Girder *(ft)*	Diaphragm Spacing *(ft)*	Number of Spaces	Diaphragm Weight *(kip)*
0.00	0.00	0.00	1	0.2700
20.07	21.12	0.00	1	0.3200
41.65	41.65	0.00	1	0.2540

Girder Bay 3

Distance Left Girder *(ft)*	Distance Right Girder *(ft)*	Diaphragm Spacing *(ft)*	Number of Spaces	Diaphragm Weight *(kip)*
0.00	0.00	0.00	1	0.2700
20.07	21.12	0.00	1	0.3200
41.65	41.65	0.00	1	0.2540

Girder Bay 4

Distance Left Girder *(ft)*	Distance Right Girder *(ft)*	Diaphragm Spacing *(ft)*	Number of Spaces	Diaphragm Weight *(kip)*
0.00	0.00	0.00	1	0.2700
20.07	21.12	0.00	1	0.3200

41.65	41.65	0.00	1	0.2540

Girder Bay 5

Distance Left Girder (ft)	Distance Right Girder (ft)	Diaphragm Spacing (ft)	Number of Spaces	Diaphragm Weight (kip)
0.00	0.00	0.00	1	0.2700
20.07	21.12	0.00	1	0.3200
41.65	41.65	0.00	1	0.2540

Girder Bay 6

Distance Left Girder (ft)	Distance Right Girder (ft)	Diaphragm Spacing (ft)	Number of Spaces	Diaphragm Weight (kip)
0.00	0.00	0.00	1	0.2700
20.07	21.12	0.00	1	0.3200
41.65	41.65	0.00	1	0.2540

Structure Typical Section

Deck

Left start width: 24.70 *(ft)*
Left end width: 24.70 *(ft)*
Right start width: 24.72 *(ft)*
Right end width: 24.72 *(ft)*
Left start overhang: 2.42 *(ft)*
Left end overhang: 2.42 *(ft)*

Deck (Cont'd)

Deck concrete: 4000 psi
Total deck thickness: 8.5000 *(in)*
Deck crack control parameter: *(kip/in)*
Sustained modular ratio factor: 3.000

Parapet

Name	Load Case	Measure To	Measured From	Distance At Start	Distance At End	Front Face Orientation
Single-Sl...	Concret...	Back	Left Ed...			Right
Single-Sl...	Concret...	Back	Right E...			Left

Lane Position

Offset Left Start: -23.20 *(ft)*
Offset Left End: -23.20 *(ft)*
Offset Right Start: 23.22 *(ft)*
Offset Right End: 23.22 *(ft)*

Wearing Surface

Wearing surface material:
Description:
Wearing surface thickness: *(in)*
Wearing surface density: *(pcf)*
Load case:

Load Case Description

Load Case Name	Description	Stage	Type	Time (Days)

Concrete Deck	Non-composite (Sta...	D,DC
parapet+sidewalk	Composite (long te...	D,DC
utilities	Composite (long te...	D,DW
wearing surface	Composite (long te...	D,DC

Superstructure Loads

Uniform Temperature

Load Case:

Temperature rise: *(F)*

Temperature fall: *(F)*

Gradient Temperature

Load Case:

Temperature value T1: *(F)*

Temperature value T2: *(F)*

Temperature value T3: *(F)*

Wind

Load Case:

Design Pressure: *(psf)*

Wind Load Path: Truss action

DL Distribution

Stage 1 Dead Load Distribution: Tributary Area

Stage 2 Dead Load Distribution: Uniformly to All Girders

Stiffener Definitions

Transverse Stiffeners

Name: Single Connection

Stiffener number: Single

Plate Width: 7.0000 *(in)*

Plate Thickness: 0.4375 *(in)*

Material: AASHTO M 94(1961)

Top Gap: *(in)*

Bottom Gap: *(in)*

Top Weld:

Web Weld:

Bottom Weld:

Name: Double Connection

Stiffener number: Pair

Plate Width: 7.0000 *(in)*

Plate Thickness: 0.4375 *(in)*

Material: AASHTO M 94(1961)

Top Gap: *(in)*

Bottom Gap: *(in)*

Top Weld:

Web Weld:

Bottom Weld:

No prestress stress limits.

No prestress properties.

No vertical shear reinforcement definitions.

No horizontal shear reinforcement definitions.

Member G1 (S13 plan designation)

Link with: None
Description:

Existing: 5% Section Loss -
Current: 5% Section Loss -
Number of Spans: 1

Span Number	Span Length *(ft)*
1	41.650000

Support	Frame Connection
1	
2	

Pedestrian load: *(lb/ft)*

Member Loads

Member Loads - Settlement

Support Number	Horizontal *(in)*	Vertical *(in)*	Rotational *(Radians)*	Load Case Name
1				
2				

Support Constraints

General

Support Number	Support Type	X Translation	Y Translation	Z Rotation
1	Pinned	Fixed	Fixed	Free
2	Roller	Free	Fixed	Free

Elastic

Support Number	X Translation *(kip/ft)*	Y Translation *(kip/ft)*	Z Rotation *(kip-in/rad)*	Override Computed Z Rotation
1				
2				

Member Alternative As-Built

Description:
Description
Material Type: Steel

Girder Type: Rolled
Member units: US Customary
Girder property input method: Schedule based
Left end X: 5.0000 *(in)*
Right end X: 5.0000 *(in)*
Additional Self Load: *(kip/ft)*
Additional Self Load %: *(%)*
Analysis Module
Analysis Method: ASD
Analysis Module: AASHTO ASD
Analysis Module Component:
Properties:

Analysis Method: LFD
Analysis Module: AASHTO LFD
Analysis Module Component:
Properties:

Analysis Method: LRFD
Analysis Module: AASHTO LRFD
Analysis Module Component:
Properties:

Analysis Method: LRFR
Analysis Module: AASHTO LRFR
Analysis Module Component:
Properties:

Analysis Method: Distribution Factors
Analysis Module:
Analysis Module Component:
Properties:

Default rating method: LFD

Factors
Factor Override
LRFD:
LFD:
ASD Factors

	Inventory	Operating
Structural steel		
Concrete		
PS Concrete Comp.		
PS Concrete Tens.		
PS Moment Cap.		
Reinforcement		
Bearing Stiffener		
Stirrup		
Timber	NA	

Default Materials

Structural steel:	AASHTO M 94(1961)
Deck concrete:	4000 psi
Deck reinforcement:	
Welds:	
Bolts:	

Impact

Standard Impact Factor

Type:	Standard - AASHTO

LRFD Dynamic Load Allowance

Fatigue and fracture limit states:	15.0 *(%)*
All other limit states:	33.0 *(%)*

Live Load Distribution

Standard

Distribution Factor (Wheels)

Lanes Loaded	Shear	Shear at Supports	Moment	Deflection
1 Lane	1.277	0.912	1.277	0.286
Multi-Lane	1.277	0.912	1.277	0.771

Girder Profile

Shape

Shape:	W 36x135
Distance:	0.00 *(ft)*
Length:	41.65 *(ft)*
Material:	AASHTO M 94(1961)

Deck Profile

Deck Concrete

Material (LRFD)	Distance	Length	Total Thickness	Structural Thickness	Effective Width (Std)	Effective Width
	(ft)	*(ft)*	*(in)*	*(in)*	*(in)*	*(in)*
4000 psi	0.00	41.65		8.0000	74.0004	74.0004

Shear Connectors

Start Distance *(ft)*	Length *(ft)*	Connector Name	Number per Row	Number of Spaces	Transverse Spacing *(in)*
0.00	41.65	Composite			

Haunch Profile

Haunch Type:	Flange edges
Embedded flange:	FALSE

Distance	Length	Z1	Z2	Z3	Z4	Y1	Y2

(ft)	*(ft)*	*(in)*	*(in)*	*(in)*	*(in)*	*(in)*	*(in)*
0.00	41.65	0.0000	0.0000	0.0000	0.0000	3.2500	3.2500

Bracing Ranges

Lateral Support

Distance *(ft)*	Length *(ft)*
0.00	41.65

Stiffener Ranges

Transverse Stiffener Ranges (Location)

Name	Distance *(ft)*	Number	Spacing *(in)*
Single Connection	20.07	1	0.0000

Bearing Stiffener Locations

Member Alternative 5% Section Loss

Description:

Description

Material Type: Steel
Girder Type: Rolled
Member units: US Customary
Girder property input method: Schedule based
Left end X: 5.0000 *(in)*
Right end X: 5.0000 *(in)*
Additional Self Load: *(kip/ft)*
Additional Self Load %: *(%)*

Analysis Module

Analysis Method: ASD
Analysis Module: AASHTO ASD
Analysis Module Component:
Properties:

Analysis Method: LFD
Analysis Module: AASHTO LFD
Analysis Module Component:
Properties:

Analysis Method: LRFD
Analysis Module: AASHTO LRFD
Analysis Module Component:
Properties:

Analysis Method: LRFR
Analysis Module: AASHTO LRFR
Analysis Module Component:
Properties:

Analysis Method: Distribution Factors
Analysis Module:
Analysis Module Component:
Properties:

Default rating method: LFD

Factors
Factor Override
LRFD:
LFD:
ASD Factors

	Inventory	Operating
Structural steel		
Concrete		
PS Concrete Comp.		
PS Concrete Tens.		
PS Moment Cap.		
Reinforcement		
Bearing Stiffener		
Stirrup		
Timber	NA	

Default Materials
Structural steel: AASHTO M 94(1961)
Deck concrete: 4000 psi
Deck reinforcement:
Welds:
Bolts:

Impact
Standard Impact Factor
Type: Standard - AASHTO
LRFD Dynamic Load Allowance
Fatigue and fracture limit states: 15.0 *(%)*
All other limit states: 33.0 *(%)*

Live Load Distribution
Standard

	Distribution Factor (Wheels)			
Lanes Loaded	Shear	Shear at Supports	Moment	Deflection
1 Lane	1.277	0.912	1.277	0.286
Multi-Lane	1.277	0.912	1.277	0.771

Girder Profile

Shape
Shape: W 36x135

Distance: 0.00 *(ft)*
Length: 41.65 *(ft)*
Material: AASHTO M 94(1961)

Deck Profile

Deck Concrete

Material (LRFD)	Distance n	Length	Total Thickness	Structural Thickness	Effective Width (Std)	Effective Width
	(ft)	*(ft)*	*(in)*	*(in)*	*(in)*	*(in)*
4000 psi	0.00	41.65		8.0000	74.0004	74.0004

Shear Connectors

Start Distance *(ft)*	Length *(ft)*	Connector Name	Number per Row	Number of Spaces	Transverse Spacing *(in)*
0.00	41.65	Composite			

Haunch Profile

Haunch Type: Flange edges
Embedded flange: FALSE

Distance *(ft)*	Length *(ft)*	Z1 *(in)*	Z2 *(in)*	Z3 *(in)*	Z4 *(in)*	Y1 *(in)*	Y2 *(in)*
0.00	41.65	0.0000	0.0000	0.0000	0.0000	3.2500	3.2500

Bracing Ranges

Lateral Support

Distance *(ft)*	Length *(ft)*
0.00	41.65

Stiffener Ranges

Transverse Stiffener Ranges (Location)

Name	Distance *(ft)*	Number	Spacing *(in)*
Single Connection	20.07	1	0.0000

Bearing Stiffener Locations

Top Flange Deterioration

Width Loss *(%)*	Thickness Loss *(%)*	Start Distance *(ft)*	Length *(ft)*
	5.0	0.00	41.65

Bottom Flange Deterioration

Width Loss *(%)*	Thickness Loss *(%)*	Start Distance *(ft)*	Length *(ft)*
	5.0	0.00	41.65

Web Deterioration

Thickness Loss (%)	Start Distance (ft)	Length (ft)
5.0	0.00	41.65

Member G2 (S14 plan designation)

Link with: None
Description:

Existing: 5% Section Loss -
Current: 5% Section Loss -
Number of Spans: 1

Span Number	Span Length (ft)
1	41.650000

Support	Frame Connection
1	
2	

Pedestrian load: 0.000 *(lb/ft)*

Member Loads

Member Loads - Settlement

Support Number	Horizontal (in)	Vertical (in)	Rotational (Radians)	Load Case Name
1				
2				

Support Constraints

General

Support Number	Support Type	X Translation	Y Translation	Z Rotation
1	Pinned	Fixed	Fixed	Free
2	Roller	Free	Fixed	Free

Elastic

Support Number	X Translation (kip/ft)	Y Translation (kip/ft)	Z Rotation (kip-in/rad)	Override Computed Z Rotation
1				
2				

Member Alternative As-Built

Description:
Description
Material Type: Steel

Girder Type: Rolled
Member units: US Customary
Girder property input method: Schedule based
Left end X: 5.0000 *(in)*
Right end X: 5.0000 *(in)*
Additional Self Load: *(kip/ft)*
Additional Self Load %: *(%)*
Analysis Module
Analysis Method: ASD
Analysis Module: AASHTO ASD
Analysis Module Component:
Properties:

Analysis Method: LFD
Analysis Module: AASHTO LFD
Analysis Module Component:
Properties:

Analysis Method: LRFD
Analysis Module: AASHTO LRFD
Analysis Module Component:
Properties:

Analysis Method: LRFR
Analysis Module: AASHTO LRFR
Analysis Module Component:
Properties:

Analysis Method: Distribution Factors
Analysis Module:
Analysis Module Component:
Properties:

Default rating method: LFD

Factors
Factor Override
LRFD:
LFD:
ASD Factors

	Inventory	Operating
Structural steel		
Concrete		
PS Concrete Comp.		
PS Concrete Tens.		
PS Moment Cap.		
Reinforcement		
Bearing Stiffener		
Stirrup		
Timber	NA	

Default Materials

Structural steel:	AASHTO M 94(1961)
Deck concrete:	4000 psi
Deck reinforcement:	
Welds:	
Bolts:	

Impact

Standard Impact Factor

Type:	Standard - AASHTO

LRFD Dynamic Load Allowance

Fatigue and fracture limit states:	15.0 *(%)*
All other limit states:	33.0 *(%)*

Live Load Distribution

Standard

Distribution Factor (Wheels)

Lanes Loaded	Shear	Shear at Supports	Moment	Deflection
1 Lane	1.071	1.200	1.071	0.286
Multi-Lane	1.364	1.611	1.364	0.771

Girder Profile

Shape

Shape:	W 36x150
Distance:	0.00 *(ft)*
Length:	41.65 *(ft)*
Material:	AASHTO M 94(1961)

Deck Profile

Deck Concrete

Material (LRFD)	Distance n	Length	Total Thickness	Structural Thickness	Effective Width (Std)	Effective Width
	(ft)	*(ft)*	*(in)*	*(in)*	*(in)*	*(in)*
4000 psi	0.00	41.65		8.0000	90.0000	90.0000

Shear Connectors

Start Distance *(ft)*	Length *(ft)*	Connector Name	Number per Row	Number of Spaces	Transverse Spacing *(in)*
0.00	41.65	Composite			

Haunch Profile

Haunch Type:	Flange edges
Embedded flange:	FALSE

Distance	Length	Z1	Z2	Y1

(ft)	*(ft)*	*(in)*	*(in)*	*(in)*
0.00	41.65	0.0000	0.0000	3.2500

Bracing Ranges

Lateral Support

Distance *(ft)*	Length *(ft)*
0.00	41.65

Stiffener Ranges

Transverse Stiffener Ranges (Location)

Name	Distance *(ft)*	Number	Spacing *(in)*
Single Connection	20.07	1	0.0000
Single Connection	21.12	1	0.0000

Bearing Stiffener Locations

Member Alternative 5% Section Loss

Description:

Description

Material Type: Steel
Girder Type: Rolled
Member units: US Customary
Girder property input method: Schedule based
Left end X: 5.0000 *(in)*
Right end X: 5.0000 *(in)*
Additional Self Load: *(kip/ft)*
Additional Self Load %: *(%)*

Analysis Module

Analysis Method: ASD
Analysis Module: AASHTO ASD
Analysis Module Component:
Properties:

Analysis Method: LFD
Analysis Module: AASHTO LFD
Analysis Module Component:
Properties:

Analysis Method: LRFD
Analysis Module: AASHTO LRFD
Analysis Module Component:
Properties:

Analysis Method: LRFR
Analysis Module: AASHTO LRFR
Analysis Module Component:
Properties:

Analysis Method: Distribution Factors
Analysis Module:
Analysis Module Component:
Properties:

Default rating method: LFD

Factors
Factor Override
LRFD:
LFD:
ASD Factors

	Inventory	Operating
Structural steel		
Concrete		
PS Concrete Comp.		
PS Concrete Tens.		
PS Moment Cap.		
Reinforcement		
Bearing Stiffener		
Stirrup		
Timber	NA	

Default Materials
Structural steel: AASHTO M 94(1961)
Deck concrete: 4000 psi
Deck reinforcement:
Welds:
Bolts:

Impact
Standard Impact Factor
Type: Standard - AASHTO
LRFD Dynamic Load Allowance
Fatigue and fracture limit states: 15.0 *(%)*
All other limit states: 33.0 *(%)*

Live Load Distribution
Standard

D i s t r i b u t i o n F a c t o r (Wheels)

Lanes Loaded	Shear	Shear at Supports	Moment	Deflection
1 Lane	1.071	1.200	1.071	0.286
Multi-Lane	1.364	1.611	1.364	0.771

Girder Profile

Shape

Shape:	W 36x150
Distance:	0.00 *(ft)*
Length:	41.65 *(ft)*
Material:	AASHTO M 94(1961)

Deck Profile

Deck Concrete

Material (LRFD)	Distance n	Length	Total Thickness	Structural Thickness	Effective Width (Std)	Effective Width
	(ft)	*(ft)*	*(in)*	*(in)*	*(in)*	*(in)*
4000 psi	0.00	41.65		8.0000	90.0000	90.0000

Shear Connectors

Start Distance	Length	Connector Name	Number per Row	Number of Spaces	Transverse Spacing
(ft)	*(ft)*				*(in)*
0.00	41.65	Composite			

Haunch Profile

Haunch Type:	Flange edges
Embedded flange:	FALSE

Distance	Length	Z1	Z2	Y1
(ft)	*(ft)*	*(in)*	*(in)*	*(in)*
0.00	41.65	0.0000	0.0000	3.2500

Bracing Ranges

Lateral Support

Distance	Length
(ft)	*(ft)*
0.00	41.65

Stiffener Ranges

Transverse Stiffener Ranges (Location)

Name	Distance	Number	Spacing
	(ft)		*(in)*
Single Connection	20.07	1	0.0000
Single Connection	21.12	1	0.0000

Bearing Stiffener Locations

Top Flange Deterioration

Width Loss	Thickness Loss	Start Distance	Length
(%)	*(%)*	*(ft)*	*(ft)*
	5.0	0.00	41.65

Bottom Flange Deterioration

Width Loss	Thickness Loss	Start Distance	Length

(%)	(%)	(ft)	(ft)
	5.0	0.00	41.65

Web Deterioration

Thickness Loss (%)	Start Distance (ft)	Length (ft)
5.0	0.00	41.65

Member G3

Link with: G2 (S14 plan designation)
Description:

Existing:
Current:
Number of Spans: 1

Span Number	Span Length (ft)
1	41.650000

Support	Frame Connection
1	
2	

Pedestrian load: (lb/ft)

Member G4

Link with: G2 (S14 plan designation)
Description:

Existing:
Current:
Number of Spans: 1

Span Number	Span Length (ft)
1	41.650000

Support	Frame Connection
1	
2	

Pedestrian load: (lb/ft)

Member G5

Link with: G2 (S14 plan designation)
Description:

Existing:

Current:
Number of Spans: 1

Span Number	Span Length *(ft)*
1	41.650000

Support	Frame Connection
1	
2	

Pedestrian load: *(lb/ft)*

Member G6

Link with: G2 (S14 plan designation)
Description:

Existing:
Current:
Number of Spans: 1

Span Number	Span Length *(ft)*
1	41.650000

Support	Frame Connection
1	
2	

Pedestrian load: *(lb/ft)*

Member G7 (S15 plan designation)

Link with: None
Description:

Existing: 5% Section Loss -
Current: 5% Section Loss -
Number of Spans: 1

Span Number	Span Length *(ft)*
1	41.650000

Support	Frame Connection
1	
2	

Pedestrian load: *(lb/ft)*

Member Loads

Member Loads - Settlement

Support Number	Horizontal *(in)*	Vertical *(in)*	Rotational *(Radians)*	Load Case Name
1				
2				

Support Constraints

General

Support Number	Support Type	X Translation	Y Translation	Z Rotation
1	Pinned	Fixed	Fixed	Free
2	Roller	Free	Fixed	Free

Elastic

Support Number	X Translation *(kip/ft)*	Y Translation *(kip/ft)*	Z Rotation *(kip-in/rad)*	Override Computed Z Rotation
1				
2				

Member Alternative As-Built

Description:

Description

Material Type: Steel
Girder Type: Rolled
Member units: US Customary
Girder property input method: Schedule based
Left end X: 5.0000 *(in)*
Right end X: 5.0000 *(in)*
Additional Self Load: *(kip/ft)*
Additional Self Load %: *(%)*

Analysis Module

Analysis Method: ASD
Analysis Module: AASHTO ASD
Analysis Module Component:
Properties:

Analysis Method: LFD
Analysis Module: AASHTO LFD
Analysis Module Component:
Properties:

Analysis Method: LRFD
Analysis Module: AASHTO LRFD
Analysis Module Component:
Properties:

Analysis Method: LRFR
Analysis Module: AASHTO LRFR
Analysis Module Component:

Properties:

Analysis Method: Distribution Factors
Analysis Module:
Analysis Module Component:
Properties:

Default rating method: LFD

Factors
Factor Override
LRFD:
LFD:
ASD Factors

	Inventory	Operating
Structural steel		
Concrete		
PS Concrete Comp.		
PS Concrete Tens.		
PS Moment Cap.		
Reinforcement		
Bearing Stiffener		
Stirrup		
Timber	NA	

Default Materials
Structural steel: AASHTO M 94(1961)
Deck concrete: 4000 psi
Deck reinforcement:
Welds:
Bolts:

Impact
Standard Impact Factor
Type: Standard - AASHTO
LRFD Dynamic Load Allowance
Fatigue and fracture limit states: 15.0 *(%)*
All other limit states: 33.0 *(%)*

Live Load Distribution
Standard

D i s t r i b u t i o n F a c t o r (Wheels)

Lanes Loaded	Shear	Shear at Supports	Moment	Deflection
1 Lane	1.268	0.901	1.268	0.286
Multi-Lane	1.268	0.901	1.268	0.771

Girder Profile

Shape

Shape:	W 36x150
Distance:	0.00 *(ft)*
Length:	41.65 *(ft)*
Material:	AASHTO M 94(1961)

Deck Profile

Deck Concrete

Material (LRFD)	Distance n	Length	Total Thickness	Structural Thickness	Effective Width (Std)	Effective Width
	(ft)	*(ft)*	*(in)*	*(in)*	*(in)*	*(in)*
4000 psi	0.00	41.65		8.0000	74.2536	74.2536

Shear Connectors

Start Distance	Length	Connector Name	Number per Row	Number of Spaces	Transverse Spacing
(ft)	*(ft)*				*(in)*
0.00	41.65	Composite			

Haunch Profile

Haunch Type:	Flange edges
Embedded flange:	FALSE

Distance	Length	Z1	Z2	Z3	Z4	Y1	Y2
(ft)	*(ft)*	*(in)*	*(in)*	*(in)*	*(in)*	*(in)*	*(in)*
0.00	41.65	0.0000	0.0000	0.0000	0.0000	3.2500	3.2500

Bracing Ranges

Lateral Support

Distance	Length
(ft)	*(ft)*
0.00	41.65

Stiffener Ranges

Transverse Stiffener Ranges (Location)

Name	Distance	Number	Spacing
	(ft)		*(in)*
Single Connection	21.12	1	0.0000

Bearing Stiffener Locations

Member Alternative 5% Section Loss

Description:

Description

Material Type:	Steel
Girder Type:	Rolled
Member units:	US Customary
Girder property input method:	Schedule based
Left end X:	5.0000 *(in)*

Right end X: 5.0000 *(in)*
Additional Self Load: *(kip/ft)*
Additional Self Load %: *(%)*
Analysis Module
Analysis Method: ASD
Analysis Module: AASHTO ASD
Analysis Module Component:
Properties:

Analysis Method: LFD
Analysis Module: AASHTO LFD
Analysis Module Component:
Properties:

Analysis Method: LRFD
Analysis Module: AASHTO LRFD
Analysis Module Component:
Properties:

Analysis Method: LRFR
Analysis Module: AASHTO LRFR
Analysis Module Component:
Properties:

Analysis Method: Distribution Factors
Analysis Module:
Analysis Module Component:
Properties:

Default rating method: LFD

Factors
Factor Override
LRFD:
LFD:
ASD Factors

	Inventory	Operating
Structural steel		
Concrete		
PS Concrete Comp.		
PS Concrete Tens.		
PS Moment Cap.		
Reinforcement		
Bearing Stiffener		
Stirrup		
Timber	NA	

Default Materials
Structural steel: AASHTO M 94(1961)

Deck concrete: 4000 psi
Deck reinforcement:
Welds:
Bolts:

Impact

Standard Impact Factor

Type: Standard - AASHTO

LRFD Dynamic Load Allowance

Fatigue and fracture limit states: 15.0 *(%)*

All other limit states: 33.0 *(%)*

Live Load Distribution

Standard

Distribution Factor (Wheels)

Lanes Loaded	Shear	Shear at Supports	Moment	Deflection
1 Lane	1.268	0.901	1.268	0.286
Multi-Lane	1.268	0.901	1.268	0.771

Girder Profile

Shape

Shape: W 36x150

Distance: 0.00 *(ft)*

Length: 41.65 *(ft)*

Material: AASHTO M 94(1961)

Deck Profile

Deck Concrete

Material (LRFD)	Distance	Length	Total Thickness	Structural Thickness	Effective Width (Std)	Effective Width
	(ft)	*(ft)*	*(in)*	*(in)*	*(in)*	*(in)*
4000 psi	0.00	41.65		8.0000	74.2536	74.2536

Shear Connectors

Start Distance *(ft)*	Length *(ft)*	Connector Name	Number per Row	Number of Spaces	Transverse Spacing *(in)*
0.00	41.65	Composite			

Haunch Profile

Haunch Type: Flange edges

Embedded flange: FALSE

Distance *(ft)*	Length *(ft)*	Z1 *(in)*	Z2 *(in)*	Z3 *(in)*	Z4 *(in)*	Y1 *(in)*	Y2 *(in)*
0.00	41.65	0.0000	0.0000	0.0000	0.0000	3.2500	3.2500

Bracing Ranges

Lateral Support

Distance (ft)	Length (ft)
0.00	41.65

Stiffener Ranges

Transverse Stiffener Ranges (Location)

Name	Distance (ft)	Number	Spacing (in)
Single Connection	21.12	1	0.0000

Bearing Stiffener Locations

Top Flange Deterioration

Width Loss (%)	Thickness Loss (%)	Start Distance (ft)	Length (ft)
	5.0	0.00	41.65

Bottom Flange Deterioration

Width Loss (%)	Thickness Loss (%)	Start Distance (ft)	Length (ft)
	5.0	0.00	41.65

Web Deterioration

Thickness Loss (%)	Start Distance (ft)	Length (ft)
5.0	0.00	41.65

Superstructure Definition Span 1 (NB)

Definition

Units: US Customary
Number of spans: 1
Number of girders: 7

Span	Length (ft)
1	33.9100

Frame Structure Simplified Definition:

Support	Frame Connection
1	
2	

Girder Spacing Display Type: Along Support
Average Humidity: 70.000 *(%)*

Analysis

Default Library Factors
Factor Override
Analysis Module

Analysis Method: ASD
Analysis Module:
Analysis Module Component:
Properties:

Analysis Method: LFD
Analysis Module:
Analysis Module Component:
Properties:

Analysis Method: LRFD
Analysis Module:
Analysis Module Component:
Properties:

Analysis Method: LRFR
Analysis Module:
Analysis Module Component:
Properties:

Analysis Method: Distribution Factors
Analysis Module:
Analysis Module Component:
Properties:

Default rating method: LFD

Impact

Standard Impact Factor

Type: Standard - AASHTO

LRFD Dynamic Load Allowance

Fatigue and fracture limit states: 15.0 *(%)*

All other limit states: 33.0 *(%)*

Structure Framing Plan Details

Layout

Support	Skew *(Degrees)*
1	8.7000
2	8.7000

Girder Spacing Orientation: Along Support

Girder Bay	Girder Spacing Start *(ft)*	End *(ft)*
1	7.5000	7.5000
2	7.5000	7.5000
3	7.5000	7.5000
4	7.5000	7.5000
5	7.5000	7.5000

6	7.5000	7.5000

Diaphragms

Girder Bay 1

Distance Left Girder *(ft)*	Distance Right Girder *(ft)*	Diaphragm Spacing *(ft)*	Number of Spaces	Diaphragm Weight *(kip)*
0.00	0.00	0.00	1	0.2450
16.08	17.26	0.00	1	0.3200
33.91	33.91	0.00	1	0.2700

Girder Bay 2

Distance Left Girder *(ft)*	Distance Right Girder *(ft)*	Diaphragm Spacing *(ft)*	Number of Spaces	Diaphragm Weight *(kip)*
0.00	0.00	0.00	1	0.2450
16.08	17.26	0.00	1	0.3200
33.91	33.91	0.00	1	0.2700

Girder Bay 3

Distance Left Girder *(ft)*	Distance Right Girder *(ft)*	Diaphragm Spacing *(ft)*	Number of Spaces	Diaphragm Weight *(kip)*
0.00	0.00	0.00	1	0.2450
16.08	17.26	0.00	1	0.3200
33.91	33.91	0.00	1	0.2700

Girder Bay 4

Distance Left Girder *(ft)*	Distance Right Girder *(ft)*	Diaphragm Spacing *(ft)*	Number of Spaces	Diaphragm Weight *(kip)*
0.00	0.00	0.00	1	0.2450
16.08	17.26	0.00	1	0.3200
33.91	33.91	0.00	1	0.2700

Girder Bay 5

Distance Left Girder *(ft)*	Distance Right Girder *(ft)*	Diaphragm Spacing *(ft)*	Number of Spaces	Diaphragm Weight *(kip)*
0.00	0.00	0.00	1	0.2450
16.08	17.26	0.00	1	0.3200
33.91	33.91	0.00	1	0.2700

Girder Bay 6

Distance Left Girder *(ft)*	Distance Right Girder *(ft)*	Diaphragm Spacing *(ft)*	Number of Spaces	Diaphragm Weight *(kip)*
0.00	0.00	0.00	1	0.2450
16.08	17.26	0.00	1	0.3200
33.91	33.91	0.00	1	0.2700

Structure Typical Section

Deck

Left start width:	24.75	*(ft)*
Left end width:	24.75	*(ft)*
Right start width:	24.67	*(ft)*

Right end width: 24.67 *(ft)*
Left start overhang: 2.51 *(ft)*
Left end overhang: 2.51 *(ft)*

Deck (Cont'd)
Deck concrete: 4000 psi
Total deck thickness: 8.5000 *(in)*
Deck crack control parameter: *(kip/in)*
Sustained modular ratio factor: 3.000

Parapet

Name	Load Case	Measure To	Measured From	Distance At Start	Distance At End	Front Face Orientation
Single-Sl...	Concret...	Back	Left Ed...			Right
Single-Sl...	Concret...	Back	Right E...			Left

Lane Position
Offset Left Start: -23.25 *(ft)*
Offset Left End: -23.25 *(ft)*
Offset Right Start: 23.17 *(ft)*
Offset Right End: 23.17 *(ft)*

Wearing Surface
Wearing surface material:
Description:
Wearing surface thickness: *(in)*
Wearing surface density: *(pcf)*
Load case:

Load Case Description

Load Case Name	Description	Stage	Type	Time *(Days)*
Concrete Deck		Non-composite (Sta...	D,DC	
parapet+sidewalk		Composite (long te...	D,DC	
utilities		Composite (long te...	D,DW	
wearing surface		Composite (long te...	D,DC	

Superstructure Loads

DL Distribution
Stage 1 Dead Load Distribution: Tributary Area
Stage 2 Dead Load Distribution: Uniformly to All Girders

Stiffener Definitions

Transverse Stiffeners

Name: Single Connection
Stiffener number: Single
Plate Width: 7.0000 *(in)*
Plate Thickness: 0.4375 *(in)*
Material: AASHTO M 94(1961)
Top Gap: *(in)*
Bottom Gap: *(in)*

Top Weld:
Web Weld:
Bottom Weld:

Name:	Double Connection
Stiffener number:	Pair
Plate Width:	7.0000 *(in)*
Plate Thickness:	0.4375 *(in)*
Material:	AASHTO M 94(1961)
Top Gap:	*(in)*
Bottom Gap:	*(in)*
Top Weld:	
Web Weld:	
Bottom Weld:	

No prestress stress limits.

No prestress properties.

No vertical shear reinforcement definitions.

No horizontal shear reinforcement definitions.

Member G1 (S4 plan designation)

Link with: None
Description:

Existing: 5% Section Loss -
Current: 5% Section Loss -
Number of Spans: 1

Span Number	Span Length *(ft)*
1	33.910000

Support	Frame Connection
1	
2	

Pedestrian load: *(lb/ft)*

Member Loads

Member Loads - Settlement

Support Number	Horizontal *(in)*	Vertical *(in)*	Rotational *(Radians)*	Load Case Name
1				
2				

Support Constraints

General

Support Number	Support Type	X Translation	Y Translation	Z Rotation
1	Pinned	Fixed	Fixed	Free
2	Roller	Free	Fixed	Free

Elastic

Support Number	X Translation *(kip/ft)*	Y Translation *(kip/ft)*	Z Rotation *(kip-in/rad)*	Override Computed Z Rotation
1				
2				

Member Alternative As-Built

Description:

Description

Material Type: Steel
Girder Type: Rolled
Member units: US Customary
Girder property input method: Schedule based
Left end X: 5.0000 *(in)*
Right end X: 5.0000 *(in)*
Additional Self Load: *(kip/ft)*
Additional Self Load %: *(%)*

Analysis Module

Analysis Method: ASD
Analysis Module: AASHTO ASD
Analysis Module Component:
Properties:

Analysis Method: LFD
Analysis Module: AASHTO LFD
Analysis Module Component:
Properties:

Analysis Method: LRFD
Analysis Module: AASHTO LRFD
Analysis Module Component:
Properties:

Analysis Method: LRFR
Analysis Module: AASHTO LRFR
Analysis Module Component:
Properties:

Analysis Method: Distribution Factors
Analysis Module:
Analysis Module Component:
Properties:

Default rating method: LFD

Factors

Factor Override

LRFD:

LFD:

ASD Factors

	Inventory	Operating
Structural steel		
Concrete		
PS Concrete Comp.		
PS Concrete Tens.		
PS Moment Cap.		
Reinforcement		
Bearing Stiffener		
Stirrup		
Timber	NA	

Default Materials

Structural steel:	AASHTO M 94(1961)
Deck concrete:	4000 psi
Deck reinforcement:	
Welds:	
Bolts:	

Impact

Standard Impact Factor

Type:	Standard - AASHTO

LRFD Dynamic Load Allowance

Fatigue and fracture limit states:	15.0 *(%)*
All other limit states:	33.0 *(%)*

Live Load Distribution

Standard

Distribution Factor (Wheels)

Lanes Loaded	Shear	Shear at Supports	Moment	Deflection
1 Lane	1.277	0.925	1.277	0.286
Multi-Lane	1.277	0.925	1.277	0.771

Girder Profile

Shape

Shape:	W 33x118
Distance:	0.00 *(ft)*
Length:	33.91 *(ft)*
Material:	AASHTO M 94(1961)

Deck Profile

Deck Concrete

Material (LRFD)	Distance n	Length	Total Thickness	Structural Thickness	Effective Width (Std)	Effective Width
	(ft)	*(ft)*	*(in)*	*(in)*	*(in)*	*(in)*
4000 psi	0.00	33.91		8.0000	75.1200	75.1200

Shear Connectors

Start Distance *(ft)*	Length *(ft)*	Connector Name	Number per Row	Number of Spaces	Transverse Spacing *(in)*
0.00	33.91	Composite			

Haunch Profile

Haunch Type: Flange edges
Embedded flange: FALSE

Distance *(ft)*	Length *(ft)*	Z1 *(in)*	Z2 *(in)*	Z3 *(in)*	Z4 *(in)*	Y1 *(in)*	Y2 *(in)*
0.00	33.91	0.0000	0.0000	0.0000	0.0000	3.2500	3.2500

Bracing Ranges

Lateral Support

Distance *(ft)*	Length *(ft)*
0.00	33.91

Stiffener Ranges

Transverse Stiffener Ranges (Location)

Name	Distance *(ft)*	Number	Spacing *(in)*
Single Connection	16.08	1	0.0000

Bearing Stiffener Locations

Member Alternative 5% Section Loss

Description:
Description
Material Type: Steel
Girder Type: Rolled
Member units: US Customary
Girder property input method: Schedule based
Left end X: 5.0000 *(in)*
Right end X: 5.0000 *(in)*
Additional Self Load: *(kip/ft)*
Additional Self Load %: *(%)*
Analysis Module
Analysis Method: ASD
Analysis Module: AASHTO ASD
Analysis Module Component:
Properties:

Analysis Method: LFD
Analysis Module: AASHTO LFD
Analysis Module Component:
Properties:

Analysis Method: LRFD
Analysis Module: AASHTO LRFD
Analysis Module Component:
Properties:

Analysis Method: LRFR
Analysis Module: AASHTO LRFR
Analysis Module Component:
Properties:

Analysis Method: Distribution Factors
Analysis Module:
Analysis Module Component:
Properties:

Default rating method: LFD

Factors
Factor Override
LRFD:
LFD:
ASD Factors

	Inventory	Operating
Structural steel		
Concrete		
PS Concrete Comp.		
PS Concrete Tens.		
PS Moment Cap.		
Reinforcement		
Bearing Stiffener		
Stirrup		
Timber	NA	

Default Materials
Structural steel: AASHTO M 94(1961)
Deck concrete: 4000 psi
Deck reinforcement:
Welds:
Bolts:

Impact
Standard Impact Factor
Type: Standard - AASHTO

LRFD Dynamic Load Allowance

Fatigue and fracture limit states:	15.0 *(%)*
All other limit states:	33.0 *(%)*

Live Load Distribution

Standard

Distribution Factor (Wheels)

Lanes Loaded	Shear	Shear at Supports	Moment	Deflection
1 Lane	1.277	0.925	1.277	0.286
Multi-Lane	1.277	0.925	1.277	0.771

Girder Profile

Shape

Shape:	W 33x118
Distance:	0.00 *(ft)*
Length:	33.91 *(ft)*
Material:	AASHTO M 94(1961)

Deck Profile

Deck Concrete

Material (LRFD)	Distance n *(ft)*	Length *(ft)*	Total Thickness *(in)*	Structural Thickness *(in)*	Effective Width (Std) *(in)*	Effective Width *(in)*
4000 psi	0.00	33.91		8.0000	75.1200	75.1200

Shear Connectors

Start Distance *(ft)*	Length *(ft)*	Connector Name	Number per Row	Number of Spaces	Transverse Spacing *(in)*
0.00	33.91	Composite			

Haunch Profile

Haunch Type:	Flange edges
Embedded flange:	FALSE

Distance *(ft)*	Length *(ft)*	Z1 *(in)*	Z2 *(in)*	Z3 *(in)*	Z4 *(in)*	Y1 *(in)*	Y2 *(in)*
0.00	33.91	0.0000	0.0000	0.0000	0.0000	3.2500	3.2500

Bracing Ranges

Lateral Support

Distance *(ft)*	Length *(ft)*
0.00	33.91

Stiffener Ranges

Transverse Stiffener Ranges (Location)

Name	Distance (ft)	Number	Spacing (in)
Single Connection	16.08	1	0.0000

Bearing Stiffener Locations

Top Flange Deterioration

Width Loss (%)	Thickness Loss (%)	Start Distance (ft)	Length (ft)
	5.0	0.00	33.91

Bottom Flange Deterioration

Width Loss (%)	Thickness Loss (%)	Start Distance (ft)	Length (ft)
	5.0	0.00	33.91

Web Deterioration

Thickness Loss (%)	Start Distance (ft)	Length (ft)
5.0	0.00	33.91

Member G2 (S5 plan designation)

Link with: None
Description:

Existing: 5% Section Loss -
Current: 5% Section Loss -
Number of Spans: 1

Span Number	Span Length (ft)
1	33.910000

Support	Frame Connection
1	
2	

Pedestrian load: 0.000 *(lb/ft)*

Member Loads

Member Loads - Settlement

Support Number	Horizontal (in)	Vertical (in)	Rotational (Radians)	Load Case Name
1				
2				

Support Constraints

General

Support Number	Support Type	X Translation	Y Translation	Z Rotation
1	Pinned	Fixed	Fixed	Free
2	Roller	Free	Fixed	Free

Elastic

Support Number	X Translation *(kip/ft)*	Y Translation *(kip/ft)*	Z Rotation *(kip-in/rad)*	Override Computed Z Rotation
1				
2				

Member Alternative As-Built

Description:

Description

Material Type: Steel
Girder Type: Rolled
Member units: US Customary
Girder property input method: Schedule based
Left end X: 5.0000 *(in)*
Right end X: 5.0000 *(in)*
Additional Self Load: *(kip/ft)*
Additional Self Load %: *(%)*

Analysis Module

Analysis Method: ASD
Analysis Module: AASHTO ASD
Analysis Module Component:
Properties:

Analysis Method: LFD
Analysis Module: AASHTO LFD
Analysis Module Component:
Properties:

Analysis Method: LRFD
Analysis Module: AASHTO LRFD
Analysis Module Component:
Properties:

Analysis Method: LRFR
Analysis Module: AASHTO LRFR
Analysis Module Component:
Properties:

Analysis Method: Distribution Factors
Analysis Module:
Analysis Module Component:
Properties:

Default rating method: LFD

Factors
Factor Override
LRFD:
LFD:
ASD Factors

	Inventory	Operating
Structural steel		
Concrete		
PS Concrete Comp.		
PS Concrete Tens.		
PS Moment Cap.		
Reinforcement		
Bearing Stiffener		
Stirrup		
Timber	NA	

Default Materials

Structural steel:	AASHTO M 94(1961)
Deck concrete:	4000 psi
Deck reinforcement:	
Welds:	
Bolts:	

Impact

Standard Impact Factor

Type:	Standard - AASHTO

LRFD Dynamic Load Allowance

Fatigue and fracture limit states:	15.0 *(%)*
All other limit states:	33.0 *(%)*

Live Load Distribution

Standard

D i s t r i b u t i o n F a c t o r (Wheels)

Lanes Loaded	Shear	Shear at Supports	Moment	Deflection
1 Lane	1.071	1.200	1.071	0.286
Multi-Lane	1.364	1.604	1.364	0.771

Girder Profile

Shape

Shape:	W 33x118
Distance:	0.00 *(ft)*
Length:	33.91 *(ft)*
Material:	AASHTO M 94(1961)

Deck Profile

Deck Concrete

Material (LRFD)	Distance n	Length	Total Thickness	Structural Thickness	Effective Width (Std)	Effective Width
	(ft)	*(ft)*	*(in)*	*(in)*	*(in)*	*(in)*
4000 psi	0.00	33.91		8.0000	90.0000	90.0000

Shear Connectors

Start Distance *(ft)*	Length *(ft)*	Connector Name	Number per Row	Number of Spaces	Transverse Spacing *(in)*
0.00	33.91	Composite			

Haunch Profile

Haunch Type: Flange edges
Embedded flange: FALSE

Distance *(ft)*	Length *(ft)*	Z1 *(in)*	Z2 *(in)*	Y1 *(in)*
0.00	33.91	0.0000	0.0000	3.2500

Bracing Ranges

Lateral Support

Distance *(ft)*	Length *(ft)*
0.00	33.91

Stiffener Ranges

Transverse Stiffener Ranges (Location)

Name	Distance *(ft)*	Number	Spacing *(in)*
Single Connection	16.08	1	0.0000
Single Connection	17.26	1	0.0000

Bearing Stiffener Locations

Member Alternative 5% Section Loss

Description:
Description
Material Type: Steel
Girder Type: Rolled
Member units: US Customary
Girder property input method: Schedule based
Left end X: 5.0000 *(in)*
Right end X: 5.0000 *(in)*
Additional Self Load: *(kip/ft)*
Additional Self Load %: *(%)*
Analysis Module
Analysis Method: ASD
Analysis Module: AASHTO ASD

Analysis Module Component:
Properties:

Analysis Method: LFD
Analysis Module: AASHTO LFD
Analysis Module Component:
Properties:

Analysis Method: LRFD
Analysis Module: AASHTO LRFD
Analysis Module Component:
Properties:

Analysis Method: LRFR
Analysis Module: AASHTO LRFR
Analysis Module Component:
Properties:

Analysis Method: Distribution Factors
Analysis Module:
Analysis Module Component:
Properties:

Default rating method: LFD

Factors
Factor Override
LRFD:
LFD:
ASD Factors

	Inventory	Operating
Structural steel		
Concrete		
PS Concrete Comp.		
PS Concrete Tens.		
PS Moment Cap.		
Reinforcement		
Bearing Stiffener		
Stirrup		
Timber	NA	

Default Materials
Structural steel: AASHTO M 94(1961)
Deck concrete: 4000 psi
Deck reinforcement:
Welds:
Bolts:

Impact

Standard Impact Factor

Type:	Standard - AASHTO

LRFD Dynamic Load Allowance

Fatigue and fracture limit states:	15.0 *(%)*
All other limit states:	33.0 *(%)*

Live Load Distribution

Standard

Distribution Factor (Wheels)

Lanes Loaded	Shear	Shear at Supports	Moment	Deflection
1 Lane	1.071	1.200	1.071	0.286
Multi-Lane	1.364	1.604	1.364	0.771

Girder Profile

Shape

Shape:	W 33x118
Distance:	0.00 *(ft)*
Length:	33.91 *(ft)*
Material:	AASHTO M 94(1961)

Deck Profile

Deck Concrete

Material (LRFD)	Distance n	Length	Total Thickness	Structural Thickness	Effective Width (Std)	Effective Width
	(ft)	*(ft)*	*(in)*	*(in)*	*(in)*	*(in)*
4000 psi	0.00	33.91		8.0000	90.0000	90.0000

Shear Connectors

Start Distance *(ft)*	Length *(ft)*	Connector Name	Number per Row	Number of Spaces	Transverse Spacing *(in)*
0.00	33.91	Composite			

Haunch Profile

Haunch Type:	Flange edges
Embedded flange:	FALSE

Distance *(ft)*	Length *(ft)*	Z1 *(in)*	Z2 *(in)*	Y1 *(in)*
0.00	33.91	0.0000	0.0000	3.2500

Bracing Ranges

Lateral Support

Distance *(ft)*	Length *(ft)*
0.00	33.91

Stiffener Ranges

Transverse Stiffener Ranges (Location)

Name	Distance (ft)	Number	Spacing (in)
Single Connection	16.08	1	0.0000
Single Connection	17.26	1	0.0000

Bearing Stiffener Locations

Top Flange Deterioration

Width Loss (%)	Thickness Loss (%)	Start Distance (ft)	Length (ft)
	5.0	0.00	33.91

Bottom Flange Deterioration

Width Loss (%)	Thickness Loss (%)	Start Distance (ft)	Length (ft)
	5.0	0.00	33.91

Web Deterioration

Thickness Loss (%)	Start Distance (ft)	Length (ft)
5.0	0.00	33.91

Member G3

Link with: G2 (S5 plan designation)
Description:

Existing:
Current:
Number of Spans: 1

Span Number	Span Length (ft)
1	33.910000

Support	Frame Connection
1	
2	

Pedestrian load: (lb/ft)

Member G4

Link with: G2 (S5 plan designation)
Description:

Existing:

Current:
Number of Spans: 1

Span Number	Span Length *(ft)*
1	33.910000

Support	Frame Connection
1	
2	

Pedestrian load: *(lb/ft)*

Member G5

Link with: G2 (S5 plan designation)
Description:

Existing:
Current:
Number of Spans: 1

Span Number	Span Length *(ft)*
1	33.910000

Support	Frame Connection
1	
2	

Pedestrian load: *(lb/ft)*

Member G6

Link with: G2 (S5 plan designation)
Description:

Existing:
Current:
Number of Spans: 1

Span Number	Span Length *(ft)*
1	33.910000

Support	Frame Connection
1	
2	

Pedestrian load: *(lb/ft)*

Member G7 (S6 plan designation)

Link with: None
Description:

Existing: 5% Section Loss -
Current: 5% Section Loss -
Number of Spans: 1

Span Number	Span Length *(ft)*
1	33.910000

Support	Frame Connection
1	
2	

Pedestrian load: *(lb/ft)*

Member Loads

Member Loads - Settlement

Support Number	Horizontal *(in)*	Vertical *(in)*	Rotational *(Radians)*	Load Case Name
1				
2				

Support Constraints

General

Support Number	Support Type	X Translation	Y Translation	Z Rotation
1	Pinned	Fixed	Fixed	Free
2	Roller	Free	Fixed	Free

Elastic

Support Number	X Translation *(kip/ft)*	Y Translation *(kip/ft)*	Z Rotation *(kip-in/rad)*	Override Computed Z Rotation
1				
2				

Member Alternative As-Built

Description:
Description
Material Type: Steel
Girder Type: Rolled
Member units: US Customary
Girder property input method: Schedule based
Left end X: 5.0000 *(in)*
Right end X: 5.0000 *(in)*
Additional Self Load: *(kip/ft)*
Additional Self Load %: *(%)*

Analysis Module

Analysis Method: ASD
Analysis Module: AASHTO ASD
Analysis Module Component:
Properties:

Analysis Method: LFD
Analysis Module: AASHTO LFD
Analysis Module Component:
Properties:

Analysis Method: LRFD
Analysis Module: AASHTO LRFD
Analysis Module Component:
Properties:

Analysis Method: LRFR
Analysis Module: AASHTO LRFR
Analysis Module Component:
Properties:

Analysis Method: Distribution Factors
Analysis Module:
Analysis Module Component:
Properties:

Default rating method: LFD

Factors

Factor Override

LRFD:
LFD:

ASD Factors

	Inventory	Operating
Structural steel		
Concrete		
PS Concrete Comp.		
PS Concrete Tens.		
PS Moment Cap.		
Reinforcement		
Bearing Stiffener		
Stirrup		
Timber	NA	

Default Materials

Structural steel: AASHTO M 94(1961)
Deck concrete: 4000 psi
Deck reinforcement:
Welds:

Bolts:

Impact

Standard Impact Factor

Type:	Standard - AASHTO

LRFD Dynamic Load Allowance

Fatigue and fracture limit states:	15.0 *(%)*
All other limit states:	33.0 *(%)*

Live Load Distribution

Standard

D i s t r i b u t i o n F a c t o r (Wheels)

Lanes Loaded	Shear	Shear at Supports	Moment	Deflection
1 Lane	1.277	0.925	1.277	0.286
Multi-Lane	1.277	0.925	1.277	0.771

Girder Profile

Shape

Shape:	W 36x135
Distance:	0.00 *(ft)*
Length:	33.91 *(ft)*
Material:	AASHTO M 94(1961)

Deck Profile

Deck Concrete

Material (LRFD)	Distance n	Length	Total Thickness	Structural Thickness	Effective Width (Std)	Effective Width
	(ft)	*(ft)*	*(in)*	*(in)*	*(in)*	*(in)*
4000 psi	0.00	33.91		8.0000	74.1240	74.1240

Shear Connectors

Start Distance *(ft)*	Length *(ft)*	Connector Name	Number per Row	Number of Spaces	Transverse Spacing *(in)*
0.00	33.91	Composite			

Haunch Profile

Haunch Type:	Flange edges
Embedded flange:	FALSE

Distance *(ft)*	Length *(ft)*	Z1 *(in)*	Z2 *(in)*	Z3 *(in)*	Z4 *(in)*	Y1 *(in)*	Y2 *(in)*
0.00	33.91	0.0000	0.0000	0.0000	0.0000	3.2500	3.2500

Bracing Ranges

Lateral Support

Distance *(ft)*	Length *(ft)*

0.00 33.91

Stiffener Ranges

Transverse Stiffener Ranges (Location)

Name	Distance *(ft)*	Number	Spacing *(in)*
Single Connection	17.26	1	0.0000

Bearing Stiffener Locations

Member Alternative 5% Section Loss

Description:
Description
Material Type: Steel
Girder Type: Rolled
Member units: US Customary
Girder property input method: Schedule based
Left end X: 5.0000 *(in)*
Right end X: 5.0000 *(in)*
Additional Self Load: *(kip/ft)*
Additional Self Load %: *(%)*
Analysis Module
Analysis Method: ASD
Analysis Module: AASHTO ASD
Analysis Module Component:
Properties:

Analysis Method: LFD
Analysis Module: AASHTO LFD
Analysis Module Component:
Properties:

Analysis Method: LRFD
Analysis Module: AASHTO LRFD
Analysis Module Component:
Properties:

Analysis Method: LRFR
Analysis Module: AASHTO LRFR
Analysis Module Component:
Properties:

Analysis Method: Distribution Factors
Analysis Module:
Analysis Module Component:
Properties:

Default rating method: LFD

Factors

Factor Override

LRFD:

LFD:

ASD Factors

	Inventory	Operating
Structural steel		
Concrete		
PS Concrete Comp.		
PS Concrete Tens.		
PS Moment Cap.		
Reinforcement		
Bearing Stiffener		
Stirrup		
Timber	NA	

Default Materials

Structural steel:	AASHTO M 94(1961)
Deck concrete:	4000 psi
Deck reinforcement:	
Welds:	
Bolts:	

Impact

Standard Impact Factor

Type:	Standard - AASHTO

LRFD Dynamic Load Allowance

Fatigue and fracture limit states:	15.0 *(%)*
All other limit states:	33.0 *(%)*

Live Load Distribution

Standard

	Distribution Factor (Wheels)			
Lanes Loaded	Shear	Shear at Supports	Moment	Deflection
1 Lane	1.277	0.925	1.277	0.286
Multi-Lane	1.277	0.925	1.277	0.771

Girder Profile

Shape

Shape:	W 36x135
Distance:	0.00 *(ft)*
Length:	33.91 *(ft)*
Material:	AASHTO M 94(1961)

Deck Profile

Deck Concrete

	Total	Structural	Effective	Effective

Material (LRFD)	Distance n	Length	Thickness	Thickness	Width (Std)	Width
	(ft)	*(ft)*	*(in)*	*(in)*	*(in)*	*(in)*
4000 psi	0.00	33.91		8.0000	74.1240	74.1240

Shear Connectors

Start Distance *(ft)*	Length *(ft)*	Connector Name	Number per Row	Number of Spaces	Transverse Spacing *(in)*
0.00	33.91	Composite			

Haunch Profile

Haunch Type: Flange edges

Embedded flange: FALSE

Distance *(ft)*	Length *(ft)*	Z1 *(in)*	Z2 *(in)*	Z3 *(in)*	Z4 *(in)*	Y1 *(in)*	Y2 *(in)*
0.00	33.91	0.0000	0.0000	0.0000	0.0000	3.2500	3.2500

Bracing Ranges

Lateral Support

Distance *(ft)*	Length *(ft)*
0.00	33.91

Stiffener Ranges

Transverse Stiffener Ranges (Location)

Name	Distance *(ft)*	Number	Spacing *(in)*
Single Connection	17.26	1	0.0000

Bearing Stiffener Locations

Top Flange Deterioration

Width Loss *(%)*	Thickness Loss *(%)*	Start Distance *(ft)*	Length *(ft)*
	5.0	0.00	33.91

Bottom Flange Deterioration

Width Loss *(%)*	Thickness Loss *(%)*	Start Distance *(ft)*	Length *(ft)*
	5.0	0.00	33.91

Web Deterioration

Thickness Loss *(%)*	Start Distance *(ft)*	Length *(ft)*
5.0	0.00	33.91

Superstructure Definition Span 2 (NB)

Definition

Units: US Customary
Number of spans: 1
Number of girders: 7

Span	Length *(ft)*
1	63.7000

Frame Structure Simplified Definition:

Support	Frame Connection
1	
2	

Girder Spacing Display Type: Along Support
Average Humidity: 70.000 *(%)*

Analysis

Default Library Factors
Factor Override
Analysis Module
Analysis Method: ASD
Analysis Module:
Analysis Module Component:
Properties:

Analysis Method: LFD
Analysis Module:
Analysis Module Component:
Properties:

Analysis Method: LRFD
Analysis Module:
Analysis Module Component:
Properties:

Analysis Method: LRFR
Analysis Module:
Analysis Module Component:
Properties:

Analysis Method: Distribution Factors
Analysis Module:
Analysis Module Component:
Properties:

Default rating method: LFD

Impact

Standard Impact Factor
Type: Standard - AASHTO
LRFD Dynamic Load Allowance

Fatigue and fracture limit states: 15.0 *(%)*
All other limit states: 33.0 *(%)*

Structure Framing Plan Details

Layout

Support	Skew *(Degrees)*
1	8.5000
2	8.5000

Girder Spacing Orientation: Along Support

Girder Bay	Girder Spacing Start *(ft)*	End *(ft)*
1	7.5000	7.5000
2	7.5000	7.5000
3	7.5000	7.5000
4	7.5000	7.5000
5	7.5000	7.5000
6	7.5000	7.5000

Diaphragms

Girder Bay 1

Distance Left Girder *(ft)*	Distance Right Girder *(ft)*	Diaphragm Spacing *(ft)*	Number of Spaces	Diaphragm Weight *(kip)*
0.00	0.00	0.00	1	0.2700
19.87	20.99	0.00	1	0.3200
19.87	20.99	21.92	1	0.3200
63.70	63.70	0.00	1	0.2700

Girder Bay 2

Distance Left Girder *(ft)*	Distance Right Girder *(ft)*	Diaphragm Spacing *(ft)*	Number of Spaces	Diaphragm Weight *(kip)*
0.00	0.00	0.00	1	0.2700
19.87	20.99	21.92	1	0.3200
19.87	20.99	0.00	1	0.3200
63.70	63.70	0.00	1	0.2700

Girder Bay 3

Distance Left Girder *(ft)*	Distance Right Girder *(ft)*	Diaphragm Spacing *(ft)*	Number of Spaces	Diaphragm Weight *(kip)*
0.00	0.00	0.00	1	0.2700
19.87	20.99	0.00	1	0.3200
19.87	20.99	21.92	1	0.3200
63.70	63.70	0.00	1	0.2700

Girder Bay 4

Distance Left Girder *(ft)*	Distance Right Girder *(ft)*	Diaphragm Spacing *(ft)*	Number of Spaces	Diaphragm Weight *(kip)*

0.00	0.00	0.00	1	0.2700
19.87	20.99	21.92	1	0.3200
19.87	20.99	0.00	1	0.3200
63.70	63.70	0.00	1	0.2700

Girder Bay 5

Distance Left Girder *(ft)*	Distance Right Girder *(ft)*	Diaphragm Spacing *(ft)*	Number of Spaces	Diaphragm Weight *(kip)*
0.00	0.00	0.00	1	0.2700
19.87	20.99	21.92	1	0.3200
19.87	20.99	0.00	1	0.3200
63.70	63.70	0.00	1	0.2700

Girder Bay 6

Distance Left Girder *(ft)*	Distance Right Girder *(ft)*	Diaphragm Spacing *(ft)*	Number of Spaces	Diaphragm Weight *(kip)*
0.00	0.00	0.00	1	0.2700
19.87	20.99	21.92	1	0.3200
19.87	20.99	0.00	1	0.3200
63.70	63.70	0.00	1	0.2700

Structure Typical Section

Deck

Left start width: 24.72 *(ft)*
Left end width: 24.72 *(ft)*
Right start width: 24.70 *(ft)*
Right end width: 24.70 *(ft)*
Left start overhang: 2.45 *(ft)*
Left end overhang: 2.45 *(ft)*

Deck (Cont'd)

Deck concrete: 4000 psi
Total deck thickness: 8.5000 *(in)*
Deck crack control parameter: *(kip/in)*
Sustained modular ratio factor: 3.000

Parapet

Name	Load Case	Measure To	Measured From	Distance At Start	Distance At End	Front Face Orientation
Single-Sl...	Concret...	Back	Left Ed...			Right
Single-Sl...	Concret...	Back	Right E...			Left

Lane Position

Offset Left Start: -23.22 *(ft)*
Offset Left End: -23.22 *(ft)*
Offset Right Start: 23.20 *(ft)*
Offset Right End: 23.20 *(ft)*

Wearing Surface

Wearing surface material:
Description:
Wearing surface thickness: *(in)*
Wearing surface density: *(pcf)*

Load case:

Load Case Description

Load Case Name	Description	Stage	Type	Time (Days)
Concrete Deck		Non-composite (Sta...	D,DC	
parapet+sidewalk		Composite (long te...	D,DC	
utilities		Composite (long te...	D,DW	
wearing surface		Composite (long te...	D,DC	

Superstructure Loads

DL Distribution

Stage 1 Dead Load Distribution: Tributary Area
Stage 2 Dead Load Distribution: Uniformly to All Girders

Stiffener Definitions

Transverse Stiffeners

Name: Single Connection
Stiffener number: Single
Plate Width: 7.0000 *(in)*
Plate Thickness: 0.4375 *(in)*
Material: AASHTO M 94(1961)
Top Gap: *(in)*
Bottom Gap: *(in)*
Top Weld:
Web Weld:
Bottom Weld:

Name: Double Connection
Stiffener number: Pair
Plate Width: 7.0000 *(in)*
Plate Thickness: 0.4375 *(in)*
Material: AASHTO M 94(1961)
Top Gap: *(in)*
Bottom Gap: *(in)*
Top Weld:
Web Weld:
Bottom Weld:

No prestress stress limits.

No prestress properties.

No vertical shear reinforcement definitions.

No horizontal shear reinforcement definitions.

Member G1 (S10 plan designation)

Link with: None
Description:

Existing: 5% Section Loss -
Current: 5% Section Loss -
Number of Spans: 1

Span Number	Span Length *(ft)*
1	63.700000

Support	Frame Connection
1	
2	

Pedestrian load: *(lb/ft)*

Member Loads

Member Loads - Settlement

Support Number	Horizontal *(in)*	Vertical *(in)*	Rotational *(Radians)*	Load Case Name
1				
2				

Support Constraints

General

Support Number	Support Type	X Translation	Y Translation	Z Rotation
1	Pinned	Fixed	Fixed	Free
2	Roller	Free	Fixed	Free

Elastic

Support Number	X Translation *(kip/ft)*	Y Translation *(kip/ft)*	Z Rotation *(kip-in/rad)*	Override Computed Z Rotation
1				
2				

Member Alternative As-Built

Description:
Description
Material Type: Steel
Girder Type: Rolled
Member units: US Customary
Girder property input method: Schedule based
Left end X: 5.0000 *(in)*
Right end X: 5.0000 *(in)*
Additional Self Load: *(kip/ft)*
Additional Self Load %: *(%)*
Analysis Module

Analysis Method: ASD
Analysis Module: AASHTO ASD
Analysis Module Component:
Properties:

Analysis Method: LFD
Analysis Module: AASHTO LFD
Analysis Module Component:
Properties:

Analysis Method: LRFD
Analysis Module: AASHTO LRFD
Analysis Module Component:
Properties:

Analysis Method: LRFR
Analysis Module: AASHTO LRFR
Analysis Module Component:
Properties:

Analysis Method: Distribution Factors
Analysis Module:
Analysis Module Component:
Properties:

Default rating method: LFD

Factors
Factor Override
LRFD:
LFD:
ASD Factors

	Inventory	Operating
Structural steel		
Concrete		
PS Concrete Comp.		
PS Concrete Tens.		
PS Moment Cap.		
Reinforcement		
Bearing Stiffener		
Stirrup		
Timber	NA	

Default Materials
Structural steel: AASHTO M 94(1961)
Deck concrete: 4000 psi
Deck reinforcement:
Welds:
Bolts:

Impact

Standard Impact Factor

Type:	Standard - AASHTO

LRFD Dynamic Load Allowance

Fatigue and fracture limit states:	15.0 *(%)*
All other limit states:	33.0 *(%)*

Live Load Distribution

Standard

Distribution Factor (Wheels)

Lanes Loaded	Shear	Shear at Supports	Moment	Deflection
1 Lane	1.277	0.921	1.277	0.286
Multi-Lane	1.277	0.921	1.277	0.771

Girder Profile

Shape

Shape:	W 36x135
Distance:	0.00 *(ft)*
Length:	63.70 *(ft)*
Material:	AASHTO M 94(1961)

Flange Cover Plates

Plate	Begin Width *(in)*	End Width *(in)*	Thickness *(in)*	Distance *(ft)*	Length *(ft)*	Material	
1 (Bot...		16.000...	16.000...	0.7500	7.35	49.00	AASHTO M ...

Deck Profile

Deck Concrete

Material (LRFD)	Distance n *(ft)*	Length *(ft)*	Total Thickness *(in)*	Structural Thickness *(in)*	Effective Width (Std) *(in)*	Effective Width *(in)*
4000 psi	0.00	63.70		8.0000	74.3760	74.3760

Shear Connectors

Start Distance *(ft)*	Length *(ft)*	Connector Name	Number per Row	Number of Spaces	Transverse Spacing *(in)*
0.00	63.70	Composite			

Haunch Profile

Haunch Type:	Flange edges
Embedded flange:	FALSE

Distance *(ft)*	Length *(ft)*	Z1 *(in)*	Z2 *(in)*	Z3 *(in)*	Z4 *(in)*	Y1 *(in)*	Y2 *(in)*
0.00	63.70	0.0000	0.0000	0.0000	0.0000	3.2500	3.2500

Bracing Ranges

Lateral Support

Distance (ft)	Length (ft)
0.00	63.70

Stiffener Ranges

Transverse Stiffener Ranges (Location)

Name	Distance (ft)	Number	Spacing (in)
Single Connection	19.87	1	0.0000
Single Connection	41.78	1	0.0000

Bearing Stiffener Locations

Member Alternative 5% Section Loss

Description:

Description

Material Type: Steel
Girder Type: Rolled
Member units: US Customary
Girder property input method: Schedule based
Left end X: 5.0000 *(in)*
Right end X: 5.0000 *(in)*
Additional Self Load: *(kip/ft)*
Additional Self Load %: *(%)*

Analysis Module

Analysis Method: ASD
Analysis Module: AASHTO ASD
Analysis Module Component:
Properties:

Analysis Method: LFD
Analysis Module: AASHTO LFD
Analysis Module Component:
Properties:

Analysis Method: LRFD
Analysis Module: AASHTO LRFD
Analysis Module Component:
Properties:

Analysis Method: LRFR
Analysis Module: AASHTO LRFR
Analysis Module Component:
Properties:

Analysis Method: Distribution Factors

Analysis Module:
Analysis Module Component:
Properties:

Default rating method: LFD

Factors
Factor Override
LRFD:
LFD:
ASD Factors

	Inventory	Operating
Structural steel		
Concrete		
PS Concrete Comp.		
PS Concrete Tens.		
PS Moment Cap.		
Reinforcement		
Bearing Stiffener		
Stirrup		
Timber	NA	

Default Materials

Structural steel:	AASHTO M 94(1961)
Deck concrete:	4000 psi
Deck reinforcement:	
Welds:	
Bolts:	

Impact
Standard Impact Factor
Type: Standard - AASHTO
LRFD Dynamic Load Allowance
Fatigue and fracture limit states: 15.0 *(%)*
All other limit states: 33.0 *(%)*

Live Load Distribution
Standard

D i s t r i b u t i o n F a c t o r (Wheels)

Lanes Loaded	Shear	Shear at Supports	Moment	Deflection
1 Lane	1.277	0.921	1.277	0.286
Multi-Lane	1.277	0.921	1.277	0.771

Girder Profile

Shape
Shape: W 36x135
Distance: 0.00 *(ft)*

Length: 63.70 *(ft)*
Material: AASHTO M 94(1961)

Flange Cover Plates

Plate	Begin Width *(in)*	End Width *(in)*	Thickness *(in)*	Distance *(ft)*	Length *(ft)*	Material	
1 (Bot...		16.000...	16.000...	0.7500	7.35	49.00	AASHTO M ...

Deck Profile

Deck Concrete

Material (LRFD)	Distance n *(ft)*	Length *(ft)*	Total Thickness *(in)*	Structural Thickness *(in)*	Effective Width (Std) *(in)*	Effective Width *(in)*
4000 psi	0.00	63.70		8.0000	74.3760	74.3760

Shear Connectors

Start Distance *(ft)*	Length *(ft)*	Connector Name	Number per Row	Number of Spaces	Transverse Spacing *(in)*
0.00	63.70	Composite			

Haunch Profile

Haunch Type: Flange edges
Embedded flange: FALSE

Distance *(ft)*	Length *(ft)*	Z1 *(in)*	Z2 *(in)*	Z3 *(in)*	Z4 *(in)*	Y1 *(in)*	Y2 *(in)*
0.00	63.70	0.0000	0.0000	0.0000	0.0000	3.2500	3.2500

Bracing Ranges

Lateral Support

Distance *(ft)*	Length *(ft)*
0.00	63.70

Stiffener Ranges

Transverse Stiffener Ranges (Location)

Name	Distance *(ft)*	Number	Spacing *(in)*
Single Connection	19.87	1	0.0000
Single Connection	41.78	1	0.0000

Bearing Stiffener Locations

Top Flange Deterioration

Width Loss *(%)*	Thickness Loss *(%)*	Start Distance *(ft)*	Length *(ft)*
	5.0	0.00	63.70

Bottom Flange Deterioration

Width Loss (%)	Thickness Loss (%)	Start Distance (ft)	Length (ft)
	5.0	0.00	63.70

Web Deterioration

Thickness Loss (%)	Start Distance (ft)	Length (ft)
5.0	0.00	63.70

Member G2 (S11 plan designation)

Link with: None
Description:

Existing: 5% Section Loss -
Current: 5% Section Loss -
Number of Spans: 1

Span Number	Span Length (ft)
1	63.700000

Support	Frame Connection
1	
2	

Pedestrian load: 0.000 *(lb/ft)*

Member Loads

Member Loads - Settlement

Support Number	Horizontal (in)	Vertical (in)	Rotational (Radians)	Load Case Name
1				
2				

Support Constraints

General

Support Number	Support Type	X Translation	Y Translation	Z Rotation
1	Pinned	Fixed	Fixed	Free
2	Roller	Free	Fixed	Free

Elastic

Support Number	X Translation (kip/ft)	Y Translation (kip/ft)	Z Rotation (kip-in/rad)	Override Computed Z Rotation
1				

Member Alternative **As-Built**

Description:

Description

Material Type:	Steel
Girder Type:	Rolled
Member units:	US Customary
Girder property input method:	Schedule based
Left end X:	5.0000 *(in)*
Right end X:	5.0000 *(in)*
Additional Self Load:	*(kip/ft)*
Additional Self Load %:	*(%)*

Analysis Module

Analysis Method:	ASD
Analysis Module:	AASHTO ASD
Analysis Module Component:	
Properties:	

Analysis Method:	LFD
Analysis Module:	AASHTO LFD
Analysis Module Component:	
Properties:	

Analysis Method:	LRFD
Analysis Module:	AASHTO LRFD
Analysis Module Component:	
Properties:	

Analysis Method:	LRFR
Analysis Module:	AASHTO LRFR
Analysis Module Component:	
Properties:	

Analysis Method:	Distribution Factors
Analysis Module:	
Analysis Module Component:	
Properties:	

Default rating method: LFD

Factors

Factor Override

LRFD:

LFD:

ASD Factors

	Inventory	Operating
Structural steel		
Concrete		
PS Concrete Comp.		

PS Concrete Tens.
PS Moment Cap.
Reinforcement
Bearing Stiffener
Stirrup
Timber NA

Default Materials

Structural steel: AASHTO M 94(1961)
Deck concrete: 4000 psi
Deck reinforcement:
Welds:
Bolts:

Impact

Standard Impact Factor

Type: Standard - AASHTO

LRFD Dynamic Load Allowance

Fatigue and fracture limit states: 15.0 *(%)*
All other limit states: 33.0 *(%)*

Live Load Distribution

Standard

Distribution Factor (Wheels)

Lanes Loaded	Shear	Shear at Supports	Moment	Deflection
1 Lane	1.071	1.200	1.071	0.286
Multi-Lane	1.364	1.606	1.364	0.771

Girder Profile

Shape

Shape: W 36x150
Distance: 0.00 *(ft)*
Length: 63.70 *(ft)*
Material: AASHTO M 94(1961)

Flange Cover Plates

Plate	Begin Width *(in)*	End Width *(in)*	Thickness *(in)*	Distance *(ft)*	Length *(ft)*	Material	
1 (Bot...		16.000...	16.000...	0.7500	8.35	47.00	AASHTO M ...

Deck Profile

Deck Concrete

Material (LRFD)	Distance *(ft)*	Length *(ft)*	Total Thickness *(in)*	Structural Thickness *(in)*	Effective Width (Std) *(in)*	Effective Width *(in)*

4000 psi		0.00	63.70		8.0000	90.0000	90.0000

Shear Connectors

Start Distance (ft)	Length (ft)	Connector Name	Number per Row	Number of Spaces	Transverse Spacing (in)
0.00	63.70	Composite			

Haunch Profile

Haunch Type: Flange edges
Embedded flange: FALSE

Distance (ft)	Length (ft)	Z1 (in)	Z2 (in)	Y1 (in)
0.00	63.70	0.0000	0.0000	3.2500

Bracing Ranges

Lateral Support

Distance (ft)	Length (ft)
0.00	63.70

Stiffener Ranges

Transverse Stiffener Ranges (Location)

Name	Distance (ft)	Number	Spacing (in)
Single Connection	19.87	1	0.0000
Single Connection	20.99	1	0.0000
Single Connection	41.78	1	0.0000
Single Connection	42.91	1	0.0000

Bearing Stiffener Locations

Member Alternative 5% Section Loss

Description:
Description
Material Type: Steel
Girder Type: Rolled
Member units: US Customary
Girder property input method: Schedule based
Left end X: 5.0000 *(in)*
Right end X: 5.0000 *(in)*
Additional Self Load: *(kip/ft)*
Additional Self Load %: *(%)*
Analysis Module
Analysis Method: ASD
Analysis Module: AASHTO ASD
Analysis Module Component:
Properties:

Analysis Method: LFD
Analysis Module: AASHTO LFD
Analysis Module Component:
Properties:

Analysis Method: LRFD
Analysis Module: AASHTO LRFD
Analysis Module Component:
Properties:

Analysis Method: LRFR
Analysis Module: AASHTO LRFR
Analysis Module Component:
Properties:

Analysis Method: Distribution Factors
Analysis Module:
Analysis Module Component:
Properties:

Default rating method: LFD

Factors
Factor Override
LRFD:
LFD:
ASD Factors

	Inventory	Operating
Structural steel		
Concrete		
PS Concrete Comp.		
PS Concrete Tens.		
PS Moment Cap.		
Reinforcement		
Bearing Stiffener		
Stirrup		
Timber	NA	

Default Materials
Structural steel: AASHTO M 94(1961)
Deck concrete: 4000 psi
Deck reinforcement:
Welds:
Bolts:

Impact
Standard Impact Factor
Type: Standard - AASHTO
LRFD Dynamic Load Allowance

Fatigue and fracture limit states:	15.0 *(%)*
All other limit states:	33.0 *(%)*

Live Load Distribution

Standard

Distribution Factor (Wheels)

Lanes Loaded	Shear	Shear at Supports	Moment	Deflection
1 Lane	1.071	1.200	1.071	0.286
Multi-Lane	1.364	1.606	1.364	0.771

Girder Profile

Shape

Shape:	W 36x150
Distance:	0.00 *(ft)*
Length:	63.70 *(ft)*
Material:	AASHTO M 94(1961)

Flange Cover Plates

Plate	Begin Width *(in)*	End Width *(in)*	Thickness *(in)*	Distance *(ft)*	Length *(ft)*	Material	
1 (Bot...		16.000...	16.000...	0.7500	8.35	47.00	AASHTO M ...

Deck Profile

Deck Concrete

Material (LRFD)	Distance n *(ft)*	Length *(ft)*	Total Thickness *(in)*	Structural Thickness *(in)*	Effective Width (Std) *(in)*	Effective Width *(in)*
4000 psi	0.00	63.70		8.0000	90.0000	90.0000

Shear Connectors

Start Distance *(ft)*	Length *(ft)*	Connector Name	Number per Row	Number of Spaces	Transverse Spacing *(in)*
0.00	63.70	Composite			

Haunch Profile

Haunch Type:	Flange edges
Embedded flange:	FALSE

Distance *(ft)*	Length *(ft)*	Z1 *(in)*	Z2 *(in)*	Y1 *(in)*
0.00	63.70	0.0000	0.0000	3.2500

Bracing Ranges

Lateral Support

Distance *(ft)*	Length *(ft)*

0.00 63.70

Stiffener Ranges

Transverse Stiffener Ranges (Location)

Name	Distance *(ft)*	Number	Spacing *(in)*
Single Connection	19.87	1	0.0000
Single Connection	20.99	1	0.0000
Single Connection	41.78	1	0.0000
Single Connection	42.91	1	0.0000

Bearing Stiffener Locations

Top Flange Deterioration

Width Loss *(%)*	Thickness Loss *(%)*	Start Distance *(ft)*	Length *(ft)*
	5.0	0.00	63.70

Bottom Flange Deterioration

Width Loss *(%)*	Thickness Loss *(%)*	Start Distance *(ft)*	Length *(ft)*
	5.0	0.00	63.70

Web Deterioration

Thickness Loss *(%)*	Start Distance *(ft)*	Length *(ft)*
5.0	0.00	63.70

Member G3

Link with: G2 (S11 plan designation)
Description:

Existing:
Current:
Number of Spans: 1

Span Number	Span Length *(ft)*
1	63.700000

Support	Frame Connection
1	
2	

Pedestrian load: *(lb/ft)*

Member G4

Link with: G2 (S11 plan designation)
Description:

Existing:
Current:
Number of Spans: 1

Span Number	Span Length *(ft)*
1	63.700000

Support	Frame Connection
1	
2	

Pedestrian load: *(lb/ft)*

Member G5

Link with: G2 (S11 plan designation)
Description:

Existing:
Current:
Number of Spans: 1

Span Number	Span Length *(ft)*
1	63.700000

Support	Frame Connection
1	
2	

Pedestrian load: *(lb/ft)*

Member G6

Link with: G2 (S11 plan designation)
Description:

Existing:
Current:
Number of Spans: 1

Span Number	Span Length *(ft)*
1	63.700000

Support	Frame Connection

1
2

Pedestrian load: *(lb/ft)*

Member G7 (S12 plan designation)

Link with: None
Description:

Existing: 5% Section Loss -
Current: 5% Section Loss -
Number of Spans: 1

Span Number	Span Length *(ft)*
1	63.700000

Support	Frame Connection
1	
2	

Pedestrian load: *(lb/ft)*

Member Loads

Member Loads - Settlement

Support Number	Horizontal *(in)*	Vertical *(in)*	Rotational *(Radians)*	Load Case Name
1				
2				

Support Constraints

General

Support Number	Support Type	X Translation	Y Translation	Z Rotation
1	Pinned	Fixed	Fixed	Free
2	Roller	Free	Fixed	Free

Elastic

Support Number	X Translation *(kip/ft)*	Y Translation *(kip/ft)*	Z Rotation *(kip-in/rad)*	Override Computed Z Rotation
1				
2				

Member Alternative As-Built

Description:

Description

Material Type: Steel
Girder Type: Rolled
Member units: US Customary

Girder property input method: Schedule based
Left end X: 5.0000 *(in)*
Right end X: 5.0000 *(in)*
Additional Self Load: *(kip/ft)*
Additional Self Load %: *(%)*
Analysis Module
Analysis Method: ASD
Analysis Module: AASHTO ASD
Analysis Module Component:
Properties:

Analysis Method: LFD
Analysis Module: AASHTO LFD
Analysis Module Component:
Properties:

Analysis Method: LRFD
Analysis Module: AASHTO LRFD
Analysis Module Component:
Properties:

Analysis Method: LRFR
Analysis Module: AASHTO LRFR
Analysis Module Component:
Properties:

Analysis Method: Distribution Factors
Analysis Module:
Analysis Module Component:
Properties:

Default rating method: LFD

Factors
Factor Override
LRFD:
LFD:
ASD Factors

	Inventory	Operating
Structural steel		
Concrete		
PS Concrete Comp.		
PS Concrete Tens.		
PS Moment Cap.		
Reinforcement		
Bearing Stiffener		
Stirrup		
Timber	NA	

Default Materials

Structural steel:	AASHTO M 94(1961)
Deck concrete:	4000 psi
Deck reinforcement:	
Welds:	
Bolts:	

Impact

Standard Impact Factor

Type:	Standard - AASHTO

LRFD Dynamic Load Allowance

Fatigue and fracture limit states:	15.0 *(%)*
All other limit states:	33.0 *(%)*

Live Load Distribution

Standard

Distribution Factor (Wheels)

Lanes Loaded	Shear	Shear at Supports	Moment	Deflection
1 Lane	1.277	0.921	1.277	0.286
Multi-Lane	1.277	0.921	1.277	0.771

Girder Profile

Shape

Shape:	W 36x135
Distance:	0.00 *(ft)*
Length:	63.70 *(ft)*
Material:	AASHTO M 94(1961)

Flange Cover Plates

Plate	Begin Width *(in)*	End Width *(in)*	Thickness *(in)*	Distance *(ft)*	Length *(ft)*	Material	
1 (Bot...		16.000...	16.000...	0.7500	0.00	63.70	AASHTO M ...

Deck Profile

Deck Concrete

Material (LRFD)	Distance n *(ft)*	Length *(ft)*	Total Thickness *(in)*	Structural Thickness *(in)*	Effective Width (Std) *(in)*	Effective Width *(in)*
4000 psi	0.00 7.10...	63.70		8.0000	74.4768	74.4768

Shear Connectors

Start Distance *(ft)*	Length *(ft)*	Connector Name	Number per Row	Number of Spaces	Transverse Spacing *(in)*
0.00	63.70	Composite			

Haunch Profile

Haunch Type: Flange edges
Embedded flange: FALSE

Distance (ft)	Length (ft)	Z1 (in)	Z2 (in)	Z3 (in)	Z4 (in)	Y1 (in)	Y2 (in)
0.00	63.70	0.0000	0.0000	0.0000	0.0000	3.2500	3.2500

Bracing Ranges

Lateral Support

Distance (ft)	Length (ft)
0.00	63.70

Stiffener Ranges

Transverse Stiffener Ranges (Location)

Name	Distance (ft)	Number	Spacing (in)
Single Connection	20.99	1	0.0000
Single Connection	42.91	1	0.0000

Bearing Stiffener Locations

Member Alternative 5% Section Loss

Description:

Description

Material Type: Steel
Girder Type: Rolled
Member units: US Customary
Girder property input method: Schedule based
Left end X: 5.0000 *(in)*
Right end X: 5.0000 *(in)*
Additional Self Load: *(kip/ft)*
Additional Self Load %: *(%)*

Analysis Module

Analysis Method: ASD
Analysis Module: AASHTO ASD
Analysis Module Component:
Properties:

Analysis Method: LFD
Analysis Module: AASHTO LFD
Analysis Module Component:
Properties:

Analysis Method: LRFD
Analysis Module: AASHTO LRFD
Analysis Module Component:
Properties:

Analysis Method: LRFR
Analysis Module: AASHTO LRFR
Analysis Module Component:
Properties:

Analysis Method: Distribution Factors
Analysis Module:
Analysis Module Component:
Properties:

Default rating method: LFD

Factors
Factor Override
LRFD:
LFD:
ASD Factors

	Inventory	Operating
Structural steel		
Concrete		
PS Concrete Comp.		
PS Concrete Tens.		
PS Moment Cap.		
Reinforcement		
Bearing Stiffener		
Stirrup		
Timber	NA	

Default Materials
Structural steel: AASHTO M 94(1961)
Deck concrete: 4000 psi
Deck reinforcement:
Welds:
Bolts:

Impact
Standard Impact Factor
Type: Standard - AASHTO
LRFD Dynamic Load Allowance
Fatigue and fracture limit states: 15.0 *(%)*
All other limit states: 33.0 *(%)*

Live Load Distribution
Standard

	Distribution Factor (Wheels)			
Lanes Loaded	Shear	Shear at Supports	Moment	Deflection
1 Lane	1.277	0.921	1.277	0.286

Multi-Lane	1.277	0.921	1.277	0.771

Girder Profile

Shape

Shape:	W 36x135
Distance:	0.00 *(ft)*
Length:	63.70 *(ft)*
Material:	AASHTO M 94(1961)

Flange Cover Plates

Plate	Begin Width *(in)*	End Width *(in)*	Thickness *(in)*	Distance *(ft)*	Length *(ft)*	Material	
1 (Bot...		16.000...	16.000...	0.7500	0.00	63.70	AASHTO M ...

Deck Profile

Deck Concrete

Material (LRFD)	Distance n *(ft)*	Length *(ft)*	Total Thickness *(in)*	Structural Thickness *(in)*	Effective Width (Std) *(in)*	Effective Width *(in)*
4000 psi	0.00 7.10...	63.70		8.0000	74.4768	74.4768

Shear Connectors

Start Distance *(ft)*	Length *(ft)*	Connector Name	Number per Row	Number of Spaces	Transverse Spacing *(in)*
0.00	63.70	Composite			

Haunch Profile

Haunch Type:	Flange edges
Embedded flange:	FALSE

Distance *(ft)*	Length *(ft)*	Z1 *(in)*	Z2 *(in)*	Z3 *(in)*	Z4 *(in)*	Y1 *(in)*	Y2 *(in)*
0.00	63.70	0.0000	0.0000	0.0000	0.0000	3.2500	3.2500

Bracing Ranges

Lateral Support

Distance *(ft)*	Length *(ft)*
0.00	63.70

Stiffener Ranges

Transverse Stiffener Ranges (Location)

Name	Distance *(ft)*	Number	Spacing *(in)*
Single Connection	20.99	1	0.0000
Single Connection	42.91	1	0.0000

Bearing Stiffener Locations

Top Flange Deterioration

Width Loss (%)	Thickness Loss (%)	Start Distance (ft)	Length (ft)
	5.0	0.00	63.70

Bottom Flange Deterioration

Width Loss (%)	Thickness Loss (%)	Start Distance (ft)	Length (ft)
	5.0	0.00	63.70

Web Deterioration

Thickness Loss (%)	Start Distance (ft)	Length (ft)
5.0	0.00	63.70

Superstructure Definition Span 3 (NB)

Definition

Units: US Customary
Number of spans: 1
Number of girders: 7

Span	Length (ft)
1	41.6600

Frame Structure Simplified Definition:

Support	Frame Connection
1	
2	

Girder Spacing Display Type: Along Support
Average Humidity: 70.000 *(%)*

Analysis

Default Library Factors
Factor Override
Analysis Module
Analysis Method: ASD
Analysis Module:
Analysis Module Component:
Properties:

Analysis Method: LFD
Analysis Module:
Analysis Module Component:
Properties:

Analysis Method: LRFD

Analysis Module:
Analysis Module Component:
Properties:

Analysis Method: LRFR
Analysis Module:
Analysis Module Component:
Properties:

Analysis Method: Distribution Factors
Analysis Module:
Analysis Module Component:
Properties:

Default rating method: LFD

Impact

Standard Impact Factor

Type: Standard - AASHTO

LRFD Dynamic Load Allowance

Fatigue and fracture limit states: 15.0 *(%)*

All other limit states: 33.0 *(%)*

Structure Framing Plan Details

Layout

Support	Skew *(Degrees)*
1	8.0000
2	8.0000

Girder Spacing Orientation: Along Support

Girder Bay	Girder Spacing Start *(ft)*	End *(ft)*
1	7.5000	7.5000
2	7.5000	7.5000
3	7.5000	7.5000
4	7.5000	7.5000
5	7.5000	7.5000
6	7.5000	7.5000

Diaphragms

Girder Bay 1

Distance Left Girder *(ft)*	Distance Right Girder *(ft)*	Diaphragm Spacing *(ft)*	Number of Spaces	Diaphragm Weight *(kip)*
0.00	0.00	0.00	1	0.2700
20.08	21.14	0.00	1	0.3200
41.66	41.66	0.00	1	0.2540

Girder Bay 2

Distance Left Girder *(ft)*	Distance Right Girder *(ft)*	Diaphragm Spacing *(ft)*	Number of Spaces	Diaphragm Weight *(kip)*
0.00	0.00	0.00	1	0.2700
20.08	21.14	0.00	1	0.3200
41.66	41.66	0.00	1	0.2540

Girder Bay 3

Distance Left Girder *(ft)*	Distance Right Girder *(ft)*	Diaphragm Spacing *(ft)*	Number of Spaces	Diaphragm Weight *(kip)*
0.00	0.00	0.00	1	0.2700
20.08	21.14	0.00	1	0.3200
41.66	41.66	0.00	1	0.2540

Girder Bay 4

Distance Left Girder *(ft)*	Distance Right Girder *(ft)*	Diaphragm Spacing *(ft)*	Number of Spaces	Diaphragm Weight *(kip)*
0.00	0.00	0.00	1	0.2700
20.08	21.14	0.00	1	0.3200
41.66	41.66	0.00	1	0.2540

Girder Bay 5

Distance Left Girder *(ft)*	Distance Right Girder *(ft)*	Diaphragm Spacing *(ft)*	Number of Spaces	Diaphragm Weight *(kip)*
0.00	0.00	0.00	1	0.2700
20.08	21.14	0.00	1	0.3200
41.66	41.66	0.00	1	0.2540

Girder Bay 6

Distance Left Girder *(ft)*	Distance Right Girder *(ft)*	Diaphragm Spacing *(ft)*	Number of Spaces	Diaphragm Weight *(kip)*
0.00	0.00	0.00	1	0.2700
20.08	21.14	0.00	1	0.3200
41.66	41.66	0.00	1	0.2540

Structure Typical Section

Deck

Left start width: 24.64 *(ft)*
Left end width: 24.64 *(ft)*
Right start width: 24.76 *(ft)*
Right end width: 24.76 *(ft)*
Left start overhang: 2.35 *(ft)*
Left end overhang: 2.35 *(ft)*

Deck (Cont'd)

Deck concrete: 4000 psi
Total deck thickness: 8.5000 *(in)*
Deck crack control parameter: *(kip/in)*
Sustained modular ratio factor: 3.000

Parapet

Name	Load Case	Measure To	Measured From	Distance At Start	Distance At End	Front Face Orientation
Single-Sl...	Concret...	Back	Left Ed...			Right
Single-Sl...	Concret...	Back	Right E...			Left

Lane Position

Offset Left Start: -23.14 *(ft)*
Offset Left End: -23.14 *(ft)*
Offset Right Start: 23.26 *(ft)*
Offset Right End: 23.26 *(ft)*

Wearing Surface

Wearing surface material:
Description:
Wearing surface thickness: *(in)*
Wearing surface density: *(pcf)*
Load case:

Load Case Description

Load Case Name	Description	Stage	Type	Time *(Days)*
Concrete Deck		Non-composite (Sta...	D,DC	
parapet+sidewalk		Composite (long te...	D,DC	
utilities		Composite (long te...	D,DW	
wearing surface		Composite (long te...	D,DC	

Superstructure Loads

DL Distribution

Stage 1 Dead Load Distribution: Tributary Area
Stage 2 Dead Load Distribution: Uniformly to All Girders

Stiffener Definitions

Transverse Stiffeners

Name: Single Connection
Stiffener number: Single
Plate Width: 7.0000 *(in)*
Plate Thickness: 0.4375 *(in)*
Material: AASHTO M 94(1961)
Top Gap: *(in)*
Bottom Gap: *(in)*
Top Weld:
Web Weld:
Bottom Weld:

Name: Double Connection
Stiffener number: Pair
Plate Width: 7.0000 *(in)*
Plate Thickness: 0.4375 *(in)*
Material: AASHTO M 94(1961)
Top Gap: *(in)*

Bottom Gap: *(in)*
Top Weld:
Web Weld:
Bottom Weld:
No prestress stress limits.

No prestress properties.

No vertical shear reinforcement definitions.

No horizontal shear reinforcement definitions.

Member G1 (S16 plan designation)

Link with: None
Description:

Existing: 5% Section Loss -
Current: 5% Section Loss -
Number of Spans: 1

Span Number	Span Length *(ft)*
1	41.660000

Support	Frame Connection
1	
2	

Pedestrian load: *(lb/ft)*

Member Loads

Member Loads - Settlement

Support Number	Horizontal *(in)*	Vertical *(in)*	Rotational *(Radians)*	Load Case Name
1				
2				

Support Constraints

General

Support Number	Support Type	X Translation	Y Translation	Z Rotation
1	Pinned	Fixed	Fixed	Free
2	Roller	Free	Fixed	Free

Elastic

Support Number	X Translation *(kip/ft)*	Y Translation *(kip/ft)*	Z Rotation *(kip-in/rad)*	Override Computed Z Rotation
1				

Member Alternative **As-Built**

Description:

Description

Material Type:	Steel
Girder Type:	Rolled
Member units:	US Customary
Girder property input method:	Schedule based
Left end X:	5.0000 *(in)*
Right end X:	5.0000 *(in)*
Additional Self Load:	*(kip/ft)*
Additional Self Load %:	*(%)*

Analysis Module

Analysis Method:	ASD
Analysis Module:	AASHTO ASD
Analysis Module Component:	
Properties:	

Analysis Method:	LFD
Analysis Module:	AASHTO LFD
Analysis Module Component:	
Properties:	

Analysis Method:	LRFD
Analysis Module:	AASHTO LRFD
Analysis Module Component:	
Properties:	

Analysis Method:	LRFR
Analysis Module:	AASHTO LRFR
Analysis Module Component:	
Properties:	

Analysis Method:	Distribution Factors
Analysis Module:	
Analysis Module Component:	
Properties:	

Default rating method: LFD

Factors

Factor Override

LRFD:

LFD:

ASD Factors

	Inventory	Operating
Structural steel		
Concrete		
PS Concrete Comp.		

PS Concrete Tens.	
PS Moment Cap.	
Reinforcement	
Bearing Stiffener	
Stirrup	
Timber	NA

Default Materials

Structural steel:	AASHTO M 94(1961)
Deck concrete:	4000 psi
Deck reinforcement:	
Welds:	
Bolts:	

Impact

Standard Impact Factor

Type:	Standard - AASHTO

LRFD Dynamic Load Allowance

Fatigue and fracture limit states:	15.0 *(%)*
All other limit states:	33.0 *(%)*

Live Load Distribution

Standard

Distribution Factor (Wheels)

Lanes Loaded	Shear	Shear at Supports	Moment	Deflection
1 Lane	1.277	0.912	1.277	0.286
Multi-Lane	1.277	0.912	1.277	0.771

Girder Profile

Shape

Shape:	W 36x135
Distance:	0.00 *(ft)*
Length:	41.66 *(ft)*
Material:	AASHTO M 94(1961)

Deck Profile

Deck Concrete

Material (LRFD)	Distance n *(ft)*	Length *(ft)*	Total Thickness *(in)*	Structural Thickness *(in)*	Effective Width (Std) *(in)*	Effective Width *(in)*
4000 psi	0.00	41.66		8.0000	73.2480	73.2480

Shear Connectors

Start Distance *(ft)*	Length *(ft)*	Connector Name	Number per Row	Number of Spaces	Transverse Spacing *(in)*

0.00	41.66	Composite

Haunch Profile

Haunch Type: Flange edges
Embedded flange: FALSE

Distance (ft)	Length (ft)	Z1 (in)	Z2 (in)	Z3 (in)	Z4 (in)	Y1 (in)	Y2 (in)
0.00	41.66	0.0000	0.0000	0.0000	0.0000	3.2500	3.2500

Bracing Ranges

Lateral Support

Distance (ft)	Length (ft)
0.00	41.66

Stiffener Ranges

Transverse Stiffener Ranges (Location)

Name	Distance (ft)	Number	Spacing (in)
Single Connection	20.08	1	0.0000

Bearing Stiffener Locations

Member Alternative 5% Section Loss

Description:
Description
Material Type: Steel
Girder Type: Rolled
Member units: US Customary
Girder property input method: Schedule based
Left end X: 5.0000 *(in)*
Right end X: 5.0000 *(in)*
Additional Self Load: *(kip/ft)*
Additional Self Load %: *(%)*
Analysis Module
Analysis Method: ASD
Analysis Module: AASHTO ASD
Analysis Module Component:
Properties:

Analysis Method: LFD
Analysis Module: AASHTO LFD
Analysis Module Component:
Properties:

Analysis Method: LRFD
Analysis Module: AASHTO LRFD
Analysis Module Component:
Properties:

Analysis Method: LRFR
Analysis Module: AASHTO LRFR
Analysis Module Component:
Properties:

Analysis Method: Distribution Factors
Analysis Module:
Analysis Module Component:
Properties:

Default rating method: LFD

Factors
Factor Override
LRFD:
LFD:
ASD Factors

	Inventory	Operating
Structural steel		
Concrete		
PS Concrete Comp.		
PS Concrete Tens.		
PS Moment Cap.		
Reinforcement		
Bearing Stiffener		
Stirrup		
Timber	NA	

Default Materials
Structural steel: AASHTO M 94(1961)
Deck concrete: 4000 psi
Deck reinforcement:
Welds:
Bolts:

Impact
Standard Impact Factor
Type: Standard - AASHTO
LRFD Dynamic Load Allowance
Fatigue and fracture limit states: 15.0 *(%)*
All other limit states: 33.0 *(%)*

Live Load Distribution
Standard

	Distribution Factor (Wheels)			
Lanes Loaded	Shear	Shear at Supports	Moment	Deflection
1 Lane	1.277	0.912	1.277	0.286

Multi-Lane	1.277	0.912	1.277	0.771

Girder Profile

Shape

Shape: W 36x135
Distance: 0.00 *(ft)*
Length: 41.66 *(ft)*
Material: AASHTO M 94(1961)

Deck Profile

Deck Concrete

Material (LRFD)	Distance n	Length	Total Thickness	Structural Thickness	Effective Width (Std)	Effective Width
	(ft)	*(ft)*	*(in)*	*(in)*	*(in)*	*(in)*
4000 psi	0.00	41.66		8.0000	73.2480	73.2480

Shear Connectors

Start Distance	Length	Connector Name	Number per Row	Number of Spaces	Transverse Spacing
(ft)	*(ft)*				*(in)*
0.00	41.66	Composite			

Haunch Profile

Haunch Type: Flange edges
Embedded flange: FALSE

Distance	Length	Z1	Z2	Z3	Z4	Y1	Y2
(ft)	*(ft)*	*(in)*	*(in)*	*(in)*	*(in)*	*(in)*	*(in)*
0.00	41.66	0.0000	0.0000	0.0000	0.0000	3.2500	3.2500

Bracing Ranges

Lateral Support

Distance	Length
(ft)	*(ft)*
0.00	41.66

Stiffener Ranges

Transverse Stiffener Ranges (Location)

Name	Distance	Number	Spacing
	(ft)		*(in)*
Single Connection	20.08	1	0.0000

Bearing Stiffener Locations

Member G2 (S17 plan designation)

Link with: None
Description:

Existing: 5% Section Loss -
Current: 5% Section Loss -
Number of Spans: 1

Span Number	Span Length *(ft)*
1	41.660000

Support	Frame Connection
1	
2	

Pedestrian load: 0.000 *(lb/ft)*

Member Loads

Member Loads - Settlement

Support Number	Horizontal *(in)*	Vertical *(in)*	Rotational *(Radians)*	Load Case Name
1				
2				

Support Constraints

General

Support Number	Support Type	X Translation	Y Translation	Z Rotation
1	Pinned	Fixed	Fixed	Free
2	Roller	Free	Fixed	Free

Elastic

Support Number	X Translation *(kip/ft)*	Y Translation *(kip/ft)*	Z Rotation *(kip-in/rad)*	Override Computed Z Rotation
1				
2				

Member Alternative As-Built

Description:

Description

Material Type: Steel
Girder Type: Rolled
Member units: US Customary
Girder property input method: Schedule based
Left end X: 5.0000 *(in)*
Right end X: 5.0000 *(in)*
Additional Self Load: *(kip/ft)*
Additional Self Load %: *(%)*

Analysis Module

Analysis Method: ASD
Analysis Module: AASHTO ASD
Analysis Module Component:

Properties:

Analysis Method: LFD
Analysis Module: AASHTO LFD
Analysis Module Component:
Properties:

Analysis Method: LRFD
Analysis Module: AASHTO LRFD
Analysis Module Component:
Properties:

Analysis Method: LRFR
Analysis Module: AASHTO LRFR
Analysis Module Component:
Properties:

Analysis Method: Distribution Factors
Analysis Module:
Analysis Module Component:
Properties:

Default rating method: LFD

Factors
Factor Override
LRFD:
LFD:
ASD Factors

	Inventory	Operating
Structural steel		
Concrete		
PS Concrete Comp.		
PS Concrete Tens.		
PS Moment Cap.		
Reinforcement		
Bearing Stiffener		
Stirrup		
Timber	NA	

Default Materials
Structural steel: AASHTO M 94(1961)
Deck concrete: 4000 psi
Deck reinforcement:
Welds:
Bolts:

Impact
Standard Impact Factor

Type:	Standard - AASHTO

LRFD Dynamic Load Allowance

Fatigue and fracture limit states:	15.0 *(%)*
All other limit states:	33.0 *(%)*

Live Load Distribution

Standard

Distribution Factor (Wheels)

Lanes Loaded	Shear	Shear at Supports	Moment	Deflection
1 Lane	1.071	1.200	1.071	0.286
Multi-Lane	1.364	1.611	1.364	0.771

Girder Profile

Shape

Shape:	W 36x150
Distance:	0.00 *(ft)*
Length:	41.66 *(ft)*
Material:	AASHTO M 94(1961)

Deck Profile

Deck Concrete

Material (LRFD)	Distance n	Length	Total Thickness	Structural Thickness	Effective Width (Std)	Effective Width
	(ft)	*(ft)*	*(in)*	*(in)*	*(in)*	*(in)*
4000 psi	0.00 7.10...	41.66		8.0000	89.1084	89.1084

Shear Connectors

Start Distance *(ft)*	Length *(ft)*	Connector Name	Number per Row	Number of Spaces	Transverse Spacing *(in)*
0.00	41.66	Composite			

Haunch Profile

Haunch Type:	Flange edges
Embedded flange:	FALSE

Distance *(ft)*	Length *(ft)*	Z1 *(in)*	Z2 *(in)*	Y1 *(in)*
0.00	41.66	0.0000	0.0000	3.2500

Bracing Ranges

Lateral Support

Distance *(ft)*	Length *(ft)*
0.00	41.66

Stiffener Ranges

Transverse Stiffener Ranges (Location)

Name	Distance (ft)	Number	Spacing (in)
Single Connection	20.08	1	0.0000
Single Connection	21.14	1	0.0000

Bearing Stiffener Locations

Member Alternative 5% Section Loss

Description:

Description

Material Type: Steel
Girder Type: Rolled
Member units: US Customary
Girder property input method: Schedule based
Left end X: 5.0000 *(in)*
Right end X: 5.0000 *(in)*
Additional Self Load: *(kip/ft)*
Additional Self Load %: *(%)*

Analysis Module

Analysis Method: ASD
Analysis Module: AASHTO ASD
Analysis Module Component:
Properties:

Analysis Method: LFD
Analysis Module: AASHTO LFD
Analysis Module Component:
Properties:

Analysis Method: LRFD
Analysis Module: AASHTO LRFD
Analysis Module Component:
Properties:

Analysis Method: LRFR
Analysis Module: AASHTO LRFR
Analysis Module Component:
Properties:

Analysis Method: Distribution Factors
Analysis Module:
Analysis Module Component:
Properties:

Default rating method: LFD

Factors

Factor Override

LRFD:
LFD:
ASD Factors

	Inventory	Operating
Structural steel		
Concrete		
PS Concrete Comp.		
PS Concrete Tens.		
PS Moment Cap.		
Reinforcement		
Bearing Stiffener		
Stirrup		
Timber	NA	

Default Materials

Structural steel:	AASHTO M 94(1961)
Deck concrete:	4000 psi
Deck reinforcement:	
Welds:	
Bolts:	

Impact

Standard Impact Factor

Type:	Standard - AASHTO

LRFD Dynamic Load Allowance

Fatigue and fracture limit states:	15.0 *(%)*
All other limit states:	33.0 *(%)*

Live Load Distribution

Standard

Distribution Factor (Wheels)

Lanes Loaded	Shear	Shear at Supports	Moment	Deflection
1 Lane	1.071	1.200	1.071	0.286
Multi-Lane	1.364	1.611	1.364	0.771

Girder Profile

Shape

Shape:	W 36x150
Distance:	0.00 *(ft)*
Length:	41.66 *(ft)*
Material:	AASHTO M 94(1961)

Deck Profile

Deck Concrete

Material (LRFD)	Distance n	Length	Total Thickness	Structural Thickness	Effective Width (Std)	Effective Width

		(ft)	*(ft)*	*(in)*	*(in)*	*(in)*	*(in)*
4000 psi		0.00 7.10...	41.66		8.0000	89.1084	89.1084

Shear Connectors

Start Distance *(ft)*	Length *(ft)*	Connector Name	Number per Row	Number of Spaces	Transverse Spacing *(in)*
0.00	41.66	Composite			

Haunch Profile

Haunch Type: Flange edges
Embedded flange: FALSE

Distance *(ft)*	Length *(ft)*	Z1 *(in)*	Z2 *(in)*	Y1 *(in)*
0.00	41.66	0.0000	0.0000	3.2500

Bracing Ranges

Lateral Support

Distance *(ft)*	Length *(ft)*
0.00	41.66

Stiffener Ranges

Transverse Stiffener Ranges (Location)

Name	Distance *(ft)*	Number	Spacing *(in)*
Single Connection	20.08	1	0.0000
Single Connection	21.14	1	0.0000

Bearing Stiffener Locations

Member G3

Link with: G2 (S17 plan designation)
Description:

Existing:
Current:
Number of Spans: 1

Span Number	Span Length *(ft)*
1	41.660000

Support	Frame Connection
1	
2	

Pedestrian load: *(lb/ft)*

Member G4

Link with: G2 (S17 plan designation)
Description:

Existing:
Current:
Number of Spans: 1

Span Number	Span Length *(ft)*
1	41.660000

Support	Frame Connection
1	
2	

Pedestrian load: *(lb/ft)*

Member G5

Link with: G2 (S17 plan designation)
Description:

Existing:
Current:
Number of Spans: 1

Span Number	Span Length *(ft)*
1	41.660000

Support	Frame Connection
1	
2	

Pedestrian load: *(lb/ft)*

Member G6

Link with: G2 (S17 plan designation)
Description:

Existing:
Current:
Number of Spans: 1

Span Number	Span Length *(ft)*
1	41.660000

Support	Frame Connection
1	
2	

Pedestrian load: *(lb/ft)*

Member G7 (S18 plan designation)

Link with: None
Description:

Existing: 5% Section Loss -
Current: 5% Section Loss -
Number of Spans: 1

Span Number	Span Length *(ft)*
1	41.660000

Support	Frame Connection
1	
2	

Pedestrian load: *(lb/ft)*

Member Loads

Member Loads - Settlement

Support Number	Horizontal *(in)*	Vertical *(in)*	Rotational *(Radians)*	Load Case Name
1				
2				

Support Constraints

General

Support Number	Support Type	X Translation	Y Translation	Z Rotation
1	Pinned	Fixed	Fixed	Free
2	Roller	Free	Fixed	Free

Elastic

Support Number	X Translation *(kip/ft)*	Y Translation *(kip/ft)*	Z Rotation *(kip-in/rad)*	Override Computed Z Rotation
1				
2				

Member Alternative As-Built

Description:
Description
Material Type: Steel
Girder Type: Rolled

Member units: US Customary
Girder property input method: Schedule based
Left end X: 5.0000 *(in)*
Right end X: 5.0000 *(in)*
Additional Self Load: *(kip/ft)*
Additional Self Load %: *(%)*
Analysis Module
Analysis Method: ASD
Analysis Module: AASHTO ASD
Analysis Module Component:
Properties:

Analysis Method: LFD
Analysis Module: AASHTO LFD
Analysis Module Component:
Properties:

Analysis Method: LRFD
Analysis Module: AASHTO LRFD
Analysis Module Component:
Properties:

Analysis Method: LRFR
Analysis Module: AASHTO LRFR
Analysis Module Component:
Properties:

Analysis Method: Distribution Factors
Analysis Module:
Analysis Module Component:
Properties:

Default rating method: LFD

Factors
Factor Override
LRFD:
LFD:
ASD Factors

	Inventory	Operating
Structural steel		
Concrete		
PS Concrete Comp.		
PS Concrete Tens.		
PS Moment Cap.		
Reinforcement		
Bearing Stiffener		
Stirrup		
Timber	NA	

Default Materials

Structural steel:	AASHTO M 94(1961)
Deck concrete:	4000 psi
Deck reinforcement:	
Welds:	
Bolts:	

Impact

Standard Impact Factor

Type:	Standard - AASHTO

LRFD Dynamic Load Allowance

Fatigue and fracture limit states:	15.0 *(%)*
All other limit states:	33.0 *(%)*

Live Load Distribution

Standard

Distribution Factor (Wheels)

Lanes Loaded	Shear	Shear at Supports	Moment	Deflection
1 Lane	1.277	0.912	1.277	0.286
Multi-Lane	1.277	0.912	1.277	0.771

Girder Profile

Shape

Shape:	W 36x135
Distance:	0.00 *(ft)*
Length:	41.66 *(ft)*
Material:	AASHTO M 94(1961)

Deck Profile

Deck Concrete

Material (LRFD)	Distance	Length	Total Thickness	Structural Thickness	Effective Width (Std)	Effective Width
	(ft)	*(ft)*	*(in)*	*(in)*	*(in)*	*(in)*
4000 psi	0.00	41.66		8.0000	74.7480	74.7480

Shear Connectors

Start Distance *(ft)*	Length *(ft)*	Connector Name	Number per Row	Number of Spaces	Transverse Spacing *(in)*
0.00	41.66	Composite			

Haunch Profile

Haunch Type:	Flange edges
Embedded flange:	FALSE

Distance *(ft)*	Length *(ft)*	Z1 *(in)*	Z2 *(in)*	Z3 *(in)*	Z4 *(in)*	Y1 *(in)*	Y2 *(in)*

0.00	41.66	0.0000	0.0000	0.0000	0.0000	3.2500	3.2500

Bracing Ranges

Lateral Support

Distance *(ft)*	Length *(ft)*
0.00	41.66

Stiffener Ranges

Transverse Stiffener Ranges (Location)

Name	Distance *(ft)*	Number	Spacing *(in)*
Single Connection	21.14	1	0.0000

Bearing Stiffener Locations

Points of Interest

Distance from left most support:	1.00 *(ft)*
Side:	Left
Transverse Stiffeners	
Override Schedule:	FALSE
Stiffener spacing:	*(in)*
Stiffener width:	*(in)*
Stiffener thickness:	*(in)*
Material:	AASHTO M 94(1961)
Stiffener number:	Single
Stiffener type:	Plate
Other Stiffeners	
Bearing Stiffener	
Override Schedule:	FALSE
Stiffener width:	*(in)*
Stiffener thickness:	*(in)*
Material:	AASHTO M 94(1961)
Clip:	*(in)*
Number of pairs:	
Pair spacing:	*(in)*
Attachment Type:	Welds
Longitudinal Stiffener	
Override Schedule:	FALSE
Stiffener width:	*(in)*
Stiffener thickness:	*(in)*
Material:	AASHTO M 94(1961)
Distance from flange to stiffener:	*(in)*
Distance measured from:	Top Flange
Fatigue	
Number of cycles:	0
Bracing	
Deck provides lateral support:	
Override diaphragm schedule:	FALSE

Distance to left diaphragm: *(ft)*
Distance to right diaphragm: *(ft)*
Diaphragm at this location: FALSE
ASD
Compression flange unsupported length: *(ft)*
Tension Field Action: Ignore combined shear and bending
Riveted Section
Net moment of inertia: *(in^4)*
Distance to centroid: *(in)*
Net area of web: *(in^2)*
Top plate allowable shear: *(ksi)*
Bottom plate allowable shear: *(ksi)*
Percent area top flange: *(%)*
Percent area bottom flange: *(%)*

Top Flange Deterioration

Width Loss *(%)*	Thickness Loss *(%)*	Start Distance *(ft)*	Length *(ft)*

Bottom Flange Deterioration

Width Loss *(%)*	Thickness Loss *(%)*	Start Distance *(ft)*	Length *(ft)*
	55.0	0.00	1.00

Member Alternative 5% Section Loss

Description:
Description
Material Type: Steel
Girder Type: Rolled
Member units: US Customary
Girder property input method: Schedule based
Left end X: 5.0000 *(in)*
Right end X: 5.0000 *(in)*
Additional Self Load: *(kip/ft)*
Additional Self Load %: *(%)*
Analysis Module
Analysis Method: ASD
Analysis Module: AASHTO ASD
Analysis Module Component:
Properties:

Analysis Method: LFD
Analysis Module: AASHTO LFD
Analysis Module Component:
Properties:

Analysis Method: LRFD

Analysis Module: AASHTO LRFD
Analysis Module Component:
Properties:

Analysis Method: LRFR
Analysis Module: AASHTO LRFR
Analysis Module Component:
Properties:

Analysis Method: Distribution Factors
Analysis Module:
Analysis Module Component:
Properties:

Default rating method: LFD

Factors
Factor Override
LRFD:
LFD:
ASD Factors

	Inventory	Operating
Structural steel		
Concrete		
PS Concrete Comp.		
PS Concrete Tens.		
PS Moment Cap.		
Reinforcement		
Bearing Stiffener		
Stirrup		
Timber	NA	

Default Materials
Structural steel: AASHTO M 94(1961)
Deck concrete: 4000 psi
Deck reinforcement:
Welds:
Bolts:

Impact
Standard Impact Factor
Type: Standard - AASHTO
LRFD Dynamic Load Allowance
Fatigue and fracture limit states: 15.0 *(%)*
All other limit states: 33.0 *(%)*

Live Load Distribution
Standard
D i s t r i b u t i o n F a c t o r (Wheels)

Lanes Loaded	Shear	Shear at Supports	Moment	Deflection
1 Lane	1.277	0.912	1.277	0.286
Multi-Lane	1.277	0.912	1.277	0.771

Girder Profile

Shape

Shape:	W 36x135
Distance:	0.00 *(ft)*
Length:	41.66 *(ft)*
Material:	AASHTO M 94(1961)

Deck Profile

Deck Concrete

Material (LRFD)	Distance n *(ft)*	Length *(ft)*	Total Thickness *(in)*	Structural Thickness *(in)*	Effective Width (Std) *(in)*	Effective Width *(in)*
4000 psi	0.00	41.66		8.0000	74.7480	74.7480

Shear Connectors

Start Distance *(ft)*	Length *(ft)*	Connector Name	Number per Row	Number of Spaces	Transverse Spacing *(in)*
0.00	41.66	Composite			

Haunch Profile

Haunch Type:	Flange edges
Embedded flange:	FALSE

Distance *(ft)*	Length *(ft)*	Z1 *(in)*	Z2 *(in)*	Z3 *(in)*	Z4 *(in)*	Y1 *(in)*	Y2 *(in)*
0.00	41.66	0.0000	0.0000	0.0000	0.0000	3.2500	3.2500

Bracing Ranges

Lateral Support

Distance *(ft)*	Length *(ft)*
0.00	41.66

Stiffener Ranges

Transverse Stiffener Ranges (Location)

Name	Distance *(ft)*	Number	Spacing *(in)*
Single Connection	21.14	1	0.0000

Bearing Stiffener Locations

Points of Interest

Distance from left most support:	1.00 *(ft)*
Side:	Left

Transverse Stiffeners

Override Schedule:	FALSE
Stiffener spacing:	*(in)*
Stiffener width:	*(in)*
Stiffener thickness:	*(in)*
Material:	AASHTO M 94(1961)
Stiffener number:	Single
Stiffener type:	Plate

Other Stiffeners

Bearing Stiffener

Override Schedule:	FALSE
Stiffener width:	*(in)*
Stiffener thickness:	*(in)*
Material:	AASHTO M 94(1961)
Clip:	*(in)*
Number of pairs:	
Pair spacing:	*(in)*
Attachment Type:	Welds

Longitudinal Stiffener

Override Schedule:	FALSE
Stiffener width:	*(in)*
Stiffener thickness:	*(in)*
Material:	AASHTO M 94(1961)
Distance from flange to stiffener:	*(in)*
Distance measured from:	Top Flange

Fatigue

Number of cycles:	0

Bracing

Deck provides lateral support:	
Override diaphragm schedule:	FALSE
Distance to left diaphragm:	*(ft)*
Distance to right diaphragm:	*(ft)*
Diaphragm at this location:	FALSE

ASD

Compression flange unsupported length:	*(ft)*
Tension Field Action	Ignore combined shear and bending

Riveted Section

Net moment of inertia:	*(in^4)*
Distance to centroid:	*(in)*
Net area of web:	*(in^2)*
Top plate allowable shear:	*(ksi)*
Bottom plate allowable shear:	*(ksi)*
Percent area top flange:	*(%)*
Percent area bottom flange:	*(%)*

Top Flange Deterioration

Width	Thickness	Start	Length

Loss (%)	Loss (%)	Distance (ft)	(ft)

Bottom Flange Deterioration

Width Loss (%)	Thickness Loss (%)	Start Distance (ft)	Length (ft)
	55.0	0.00	1.00

AASHTOWARE BRIDGE RATING (FORMERLY VIRTIS)

OUTPUT DATA

Bridge Name: 1031529
NBI Structure ID: 1031529
Bridge ID: 1031529

Analyzed By: BrR
Analyze Date: Tuesday, April 15, 2014 10:54:17
Analysis Engine: AASHTO LFR Engine Version 6.5.0.3001
Analysis Preference Setting: None

Report By: brr
Report Date: Tuesday, April 15, 2014 11:13:05

Structure Definition Name: Span 1 (SB)
Member Name: G1 (S1 plan designation)
Member Alternative Name: 5% Section Loss

Load Factor Rating Summary

Live Load		Rating Factor	Controls	Capacity (Ton)	Location Span	Location (ft)	Location Percent	Impact	Lane
H 20-44	Inventory	3.628	Service - Steel	72.56	1	16.95	50.0	As Requested	As Requested
	Operating	6.058	Service - Steel	121.17	1	16.95	50.0	As Requested	As Requested
HS 20-44	Inventory	3.036	Service - Steel	109.30	1	13.56	40.0	As Requested	As Requested
	Operating	5.070	Service - Steel	182.52	1	13.56	40.0	As Requested	As Requested

Note:
"N/A" indicates not applicable
"**" indicates not available

Individual Vehicle Load Factor Rating Summary

Live Load		Vehicle Type	Rating Factor	Controls	Capacity (Ton)	Location Span	(ft)	Percent	Impact	Lane
H 20-44	Inventory	Lane	4.199	Service - Steel	83.98	1	16.95	50.0	As Requested	As Requested
	Operating	Lane	7.013	Service - Steel	140.25	1	16.95	50.0	As Requested	As Requested
H 20-44	Inventory	Axle Load	3.628	Service - Steel	72.56	1	16.95	50.0	As Requested	As Requested
	Operating	Axle Load	6.058	Service - Steel	121.17	1	16.95	50.0	As Requested	As Requested

Note:
"N/A" indicates not applicable
"**" indicates not available

Reactions
Live Load H 20-44

Support	Stage 1 DL (kip)	Stage 2 DL (kip)	+(LL+I) (kip)	-(LL+I) (kip)	Reaction +IF (%)	Reaction -IF (%)
1	24.47	N/A	21.72(L)	0.00(L)	30.000	0.000
2	24.47	N/A	21.72(L)	0.00(L)	30.000	0.000

Note:
"N/A" indicates not applicable
"**" indicates not available

LL Codes:
(T) Truck load controls
(L) Lane load controls

Note:
Impact and distribution factors included in above live load reactions.

Moments
Live Load H 20-44

Span 1

Location (ft)	Percent	Stage 1 DL (kip-ft)	Stage 2 DL (kip-ft)	+(LL+I) (kip-ft)	-(LL+I) (kip-ft)	+Impact Factor (%)	-Impact Factor (%)
0.00	0.0	0.00	N/A	-0.00(L)	-0.00(L)	**	**
3.39	10.0	74.31	N/A	91.25(T)	0.00(L)	**	**
6.78	20.0	132.17	N/A	160.17(T)	0.00(L)	**	**
10.17	30.0	173.58	N/A	206.77(T)	0.00(L)	**	**
13.56	40.0	198.54	N/A	231.04(T)	0.00(L)	**	**
16.04	47.3	206.38	N/A	234.65(T)	0.00(L)	**	**
16.95	50.0	206.91	N/A	232.98(T)	0.00(L)	**	**
20.34	60.0	198.43	N/A	231.04(T)	0.00(L)	**	**
23.73	70.0	173.49	N/A	206.77(T)	0.00(L)	**	**
27.12	80.0	132.11	N/A	160.17(T)	0.00(L)	**	**
30.51	90.0	74.28	N/A	91.25(T)	0.00(L)	**	**
33.90	100.0	-0.00	N/A	0.00(L)	0.00(L)	**	**

Note:
"N/A" indicates not applicable
"**" indicates not available

LL Codes:
(T) Truck load controls
(L) Lane load controls

Note:
Impact and distribution factors included in above live load moments.

Shears
Live Load H 20-44

Span 1

Location (ft)	Percent	Stage 1 DL (kip)	Stage 2 DL (kip)	+(LL+I) (kip)	-(LL+I) (kip)	+Impact Factor (%)	-Impact Factor (%)
0.00	0.0	24.35	N/A	26.11(T)	-0.00(L)	**	**
3.39	10.0	19.49	N/A	26.92(T)	-2.63(T)	**	**
6.78	20.0	14.64	N/A	23.62(T)	-5.27(T)	**	**
10.17	30.0	9.79	N/A	20.33(T)	-7.90(T)	**	**
13.56	40.0	4.94	N/A	17.04(T)	-10.54(T)	**	**
16.04	47.3	1.39	N/A	14.63(T)	-12.86(T)	**	**
16.95	50.0	-0.08	N/A	13.75(T)	-13.75(T)	**	**
20.34	60.0	-4.93	N/A	10.54(T)	-17.04(T)	**	**
23.73	70.0	-9.78	N/A	7.90(T)	-20.33(T)	**	**
27.12	80.0	-14.63	N/A	5.27(T)	-23.62(T)	**	**
30.51	90.0	-19.49	N/A	2.63(T)	-26.92(T)	**	**
33.90	100.0	-24.34	N/A	-0.00(L)	-26.11(T)	**	**

Note:
"N/A" indicates not applicable
"**" indicates not available

LL Codes:
(T) Truck load controls
(L) Lane load controls

Note:
Impact and distribution factors included in above live load shears.

Individual Vehicle Load Factor Rating Summary

Live Load		Vehicle Type	Rating Factor	Controls	Capacity (Ton)	Location Span	(ft)	Percent	Impact	Lane
HS 20-44	Inventory	Lane	4.199	Service - Steel	151.17	1	16.95	50.0	As Requested	As Requested
	Operating	Lane	7.013	Service - Steel	252.46	1	16.95	50.0	As Requested	As Requested
HS 20-44	Inventory	Axle Load	3.036	Service - Steel	109.30	1	13.56	40.0	As Requested	As Requested
	Operating	Axle Load	5.070	Service - Steel	182.52	1	13.56	40.0	As Requested	As Requested

Note:
"N/A" indicates not applicable
"**" indicates not available

Reactions
Live Load HS 20-44

Support	Stage 1 DL (kip)	Stage 2 DL (kip)	+(LL+I) (kip)	-(LL+I) (kip)	Reaction +IF (%)	Reaction -IF (%)
1	24.47	N/A	30.76(T)	0.00(L)	30.000	0.000
2	24.47	N/A	30.76(T)	0.00(L)	30.000	0.000

Note:
"N/A" indicates not applicable
"**" indicates not available

LL Codes:
(T) Truck load controls
(L) Lane load controls

Note:
Impact and distribution factors included in above live load reactions.

Moments
Live Load HS 20-44

Span 1

Location (ft)	Percent	Stage 1 DL (kip-ft)	Stage 2 DL (kip-ft)	+(LL+I) (kip-ft)	-(LL+I) (kip-ft)	+Impact Factor (%)	-Impact Factor (%)
0.00	0.0	0.00	N/A	-0.00(L)	-0.00(L)	**	**
3.39	10.0	74.31	N/A	125.52(T)	0.00(L)	**	**
6.78	20.0	132.17	N/A	212.02(T)	0.00(L)	**	**
10.17	30.0	173.58	N/A	264.45(T)	0.00(L)	**	**
13.56	40.0	198.54	N/A	281.15(T)	0.00(L)	**	**
16.04	47.3	206.38	N/A	277.82(T)	0.00(L)	**	**
16.95	50.0	206.91	N/A	271.84(T)	0.00(L)	**	**
20.34	60.0	198.43	N/A	281.15(T)	0.00(L)	**	**
23.73	70.0	173.49	N/A	264.45(T)	0.00(L)	**	**
27.12	80.0	132.11	N/A	212.02(T)	0.00(L)	**	**
30.51	90.0	74.28	N/A	125.52(T)	0.00(L)	**	**
33.90	100.0	-0.00	N/A	0.00(L)	0.00(L)	**	**

Note:
"N/A" indicates not applicable
"**" indicates not available

LL Codes:
(T) Truck load controls
(L) Lane load controls

Note:
Impact and distribution factors included in above live load moments.

Shears
Live Load HS 20-44

Span 1

Location (ft)	Percent	Stage 1 DL (kip)	Stage 2 DL (kip)	+(LL+I) (kip)	-(LL+I) (kip)	+Impact Factor (%)	-Impact Factor (%)
0.00	0.0	24.35	N/A	42.08(T)	-0.00(L)	**	**
3.39	10.0	19.49	N/A	37.03(T)	-2.63(T)	**	**
6.78	20.0	14.64	N/A	31.27(T)	-5.27(T)	**	**
10.17	30.0	9.79	N/A	26.00(T)	-7.90(T)	**	**
13.56	40.0	4.94	N/A	20.73(T)	-10.54(T)	**	**
16.04	47.3	1.39	N/A	16.88(T)	-14.05(T)	**	**
16.95	50.0	-0.08	N/A	15.46(T)	-15.46(T)	**	**
20.34	60.0	-4.93	N/A	10.54(T)	-20.73(T)	**	**
23.73	70.0	-9.78	N/A	7.90(T)	-26.00(T)	**	**
27.12	80.0	-14.63	N/A	5.27(T)	-31.27(T)	**	**
30.51	90.0	-19.49	N/A	2.63(T)	-37.03(T)	**	**
33.90	100.0	-24.34	N/A	-0.00(L)	-42.08(T)	**	**

Note:
"N/A" indicates not applicable
"**" indicates not available

LL Codes:
(T) Truck load controls
(L) Lane load controls

Note:
Impact and distribution factors included in above live load shears.

Cross Section Properties topic is not available for the specified analysis engine!

Report by Action: ☑ **Flexure** ☑ **Shear** ☑ **Overload** ☑ **Critical**

Detailed Rating Results
H 20-44
Axle Load
Impact: As Requested
Lane: As Requested

Span 1

Location (ft)	Percent	Limit State	Units	Capacity	DL	LL	Inventory Rating Factor	Inventory Load Rating (Ton)	Operating Rating Factor	Operating Load Rating (Ton)
0.00	0.0	Flexure	KIP-FT	2697.14	0.00	0.00	99.000	1980.00	99.000	1980.00
0.00	**0.0**	**Shear**	**KIPS**	**370.61**	**24.35**	**26.11**	**5.979**	**119.59**	**9.986**	**199.71**
0.00	0.0	Overload	KSI	-33.00	-0.00	-0.00	99.000	1980.00	99.000	1980.00
3.39	10.0	Flexure	KIP-FT	2697.14	74.31	91.25	13.127	262.54	21.922	438.44
3.39	**10.0**	**Shear**	**KIPS**	**370.61**	**19.49**	**26.92**	**5.908**	**118.16**	**9.867**	**197.33**
3.39	10.0	Overload	KSI	33.00	2.21	1.63	10.714	214.27	17.892	357.83
6.78	20.0	Flexure	KIP-FT	2697.14	132.17	160.17	7.262	145.24	12.128	242.56
6.78	20.0	Shear	KIPS	370.61	14.64	23.62	6.855	137.10	11.447	228.95
6.78	**20.0**	**Overload**	**KSI**	**33.00**	**3.93**	**2.86**	**5.743**	**114.85**	**9.590**	**191.81**
10.17	30.0	Flexure	KIP-FT	2697.14	173.58	206.77	5.506	110.11	9.194	183.89
10.17	30.0	Shear	KIPS	370.61	9.79	20.33	8.108	162.16	13.540	270.80
10.17	**30.0**	**Overload**	**KSI**	**33.00**	**5.17**	**3.69**	**4.249**	**84.97**	**7.095**	**141.90**
13.56	40.0	Flexure	KIP-FT	2697.14	198.54	231.04	4.863	97.25	8.121	162.41
13.56	40.0	Shear	KIPS	370.61	4.94	17.04	9.845	196.91	16.442	328.84
13.56	**40.0**	**Overload**	**KSI**	**33.00**	**5.91**	**4.12**	**3.694**	**73.89**	**6.170**	**123.39**
16.95	50.0	Flexure	KIP-FT	2697.14	206.91	232.98	4.801	96.01	8.017	160.34
16.95	50.0	Shear	KIPS	370.61	0.08	13.75	12.416	248.32	20.735	414.69
16.95	**50.0**	**Overload**	**KSI**	**33.00**	**6.16**	**4.16**	**3.628**	**72.56**	**6.058**	**121.17**
20.34	60.0	Flexure	KIP-FT	2697.14	198.43	231.04	4.863	97.26	8.121	162.42
20.34	60.0	Shear	KIPS	370.61	4.93	17.04	9.846	196.92	16.442	328.85
20.34	**60.0**	**Overload**	**KSI**	**33.00**	**5.91**	**4.12**	**3.695**	**73.90**	**6.171**	**123.41**
23.73	70.0	Flexure	KIP-FT	2697.14	173.49	206.77	5.506	110.12	9.195	183.90
23.73	70.0	Shear	KIPS	370.61	9.78	20.33	8.108	162.16	13.541	270.81
23.73	**70.0**	**Overload**	**KSI**	**33.00**	**5.16**	**3.69**	**4.249**	**84.98**	**7.096**	**141.92**

27.12	80.0	Flexure	KIP-FT	2697.14	132.11	160.17	7.262	145.25	12.128	242.56
27.12	80.0	Shear	KIPS	370.61	14.63	23.62	6.855	137.10	11.448	228.96
27.12	**80.0**	**Overload**	**KSI**	**33.00**	**3.93**	**2.86**	**5.743**	**114.86**	**9.591**	**191.82**
30.51	90.0	Flexure	KIP-FT	2697.14	74.28	91.25	13.127	262.55	21.923	438.45
30.51	**90.0**	**Shear**	**KIPS**	**370.61**	**19.49**	**26.92**	**5.908**	**118.17**	**9.867**	**197.34**
30.51	90.0	Overload	KSI	33.00	2.21	1.63	10.714	214.28	17.892	357.84
33.90	100.0	Flexure	KIP-FT	2697.14	0.00	0.00	99.000	1980.00	99.000	1980.00
33.90	**100.0**	**Shear**	**KIPS**	**370.61**	**24.34**	**26.11**	**5.980**	**119.59**	**9.986**	**199.72**
33.90	100.0	Overload	KSI	-33.00	-0.00	-0.00	99.000	1980.00	99.000	1980.00

Detailed Rating Results
H 20-44
Lane
Impact: As Requested
Lane: As Requested

Span 1

Location							Inventory Rating	Inventory Load Rating	Operating Rating	Operating Load Rating
(ft)	**Percent**	**Limit State**	**Units**	**Capacity**	**DL**	**LL**	**Factor**	**(Ton)**	**Factor**	**(Ton)**
0.00	0.0	Flexure	KIP-FT	2697.14	0.00	0.00	99.000	1980.00	99.000	1980.00
0.00	**0.0**	**Shear**	**KIPS**	**370.61**	**24.35**	**24.26**	**6.436**	**128.73**	**10.749**	**214.98**
0.00	0.0	Overload	KSI	-33.00	-0.00	-0.00	99.000	1980.00	99.000	1980.00
3.39	10.0	Flexure	KIP-FT	2697.14	74.31	72.46	16.531	330.63	27.607	552.15
3.39	**10.0**	**Shear**	**KIPS**	**370.61**	**19.49**	**26.50**	**6.002**	**120.03**	**10.023**	**200.46**
3.39	10.0	Overload	KSI	33.00	2.21	1.29	13.492	269.84	22.531	450.63
6.78	20.0	Flexure	KIP-FT	2697.14	132.17	128.82	9.030	180.60	15.080	301.60
6.78	**20.0**	**Shear**	**KIPS**	**370.61**	**14.64**	**22.84**	**7.090**	**141.81**	**11.841**	**236.82**
6.78	20.0	Overload	KSI	33.00	3.93	2.30	7.141	142.81	11.925	238.50
10.17	30.0	Flexure	KIP-FT	2697.14	173.58	169.07	6.733	134.67	11.245	224.89
10.17	30.0	Shear	KIPS	370.61	9.79	19.36	8.515	170.30	14.220	284.40
10.17	**30.0**	**Overload**	**KSI**	**33.00**	**5.17**	**3.02**	**5.196**	**103.92**	**8.677**	**173.54**
13.56	40.0	Flexure	KIP-FT	2697.14	198.54	193.23	5.814	116.28	9.710	194.20
13.56	40.0	Shear	KIPS	370.61	4.94	16.06	10.447	208.93	17.446	348.92
13.56	**40.0**	**Overload**	**KSI**	**33.00**	**5.91**	**3.45**	**4.417**	**88.35**	**7.377**	**147.54**
16.95	50.0	Flexure	KIP-FT	2697.14	206.91	201.28	5.557	111.14	9.280	185.60

16.95	50.0	Shear	KIPS	370.61	0.08	12.94	13.194	263.87	22.034	440.67
16.95	**50.0**	**Overload**	**KSI**	**33.00**	**6.16**	**3.59**	**4.199**	**83.98**	**7.013**	**140.25**
20.34	60.0	Flexure	KIP-FT	2697.14	198.43	193.23	5.815	116.29	9.710	194.21
20.34	60.0	Shear	KIPS	370.61	4.93	16.06	10.447	208.94	17.446	348.93
20.34	**60.0**	**Overload**	**KSI**	**33.00**	**5.91**	**3.45**	**4.418**	**88.36**	**7.378**	**147.56**
23.73	70.0	Flexure	KIP-FT	2697.14	173.49	169.07	6.734	134.67	11.245	224.90
23.73	70.0	Shear	KIPS	370.61	9.78	19.36	8.515	170.31	14.220	284.41
23.73	**70.0**	**Overload**	**KSI**	**33.00**	**5.16**	**3.02**	**5.196**	**103.93**	**8.678**	**173.56**
27.12	80.0	Flexure	KIP-FT	2697.14	132.11	128.82	9.030	180.60	15.080	301.61
27.12	**80.0**	**Shear**	**KIPS**	**370.61**	**14.63**	**22.84**	**7.091**	**141.81**	**11.841**	**236.82**
27.12	80.0	Overload	KSI	33.00	3.93	2.30	7.141	142.82	11.926	238.51
30.51	90.0	Flexure	KIP-FT	2697.14	74.28	72.46	16.532	330.63	27.608	552.15
30.51	**90.0**	**Shear**	**KIPS**	**370.61**	**19.49**	**26.50**	**6.002**	**120.04**	**10.023**	**200.46**
30.51	90.0	Overload	KSI	33.00	2.21	1.29	13.492	269.85	22.532	450.64
33.90	100.0	Flexure	KIP-FT	2697.14	0.00	0.00	99.000	1980.00	99.000	1980.00
33.90	**100.0**	**Shear**	**KIPS**	**370.61**	**24.34**	**24.26**	**6.437**	**128.73**	**10.749**	**214.99**
33.90	100.0	Overload	KSI	-33.00	-0.00	-0.00	99.000	1980.00	99.000	1980.00

Detailed Rating Results
HS 20-44
Axle Load
Impact: As Requested
Lane: As Requested

Span 1

Location							**Inventory Rating**	**Inventory Load Rating**	**Operating Rating**	**Operating Load Rating**
(ft)	**Percent**	**Limit State**	**Units**	**Capacity**	**DL**	**LL**	**Factor**	**(Ton)**	**Factor**	**(Ton)**
0.00	0.0	Flexure	KIP-FT	2697.14	0.00	0.00	99.000	3564.00	99.000	3564.00
0.00	**0.0**	**Shear**	**KIPS**	**370.61**	**24.35**	**42.08**	**3.710**	**133.57**	**6.196**	**223.06**
0.00	0.0	Overload	KSI	-33.00	-0.00	-0.00	99.000	3564.00	99.000	3564.00
3.39	10.0	Flexure	KIP-FT	2697.14	74.31	125.52	9.543	343.54	15.936	573.71
3.39	**10.0**	**Shear**	**KIPS**	**370.61**	**19.49**	**37.03**	**4.295**	**154.62**	**7.173**	**258.21**
3.39	10.0	Overload	KSI	33.00	2.21	2.24	7.788	280.38	13.006	468.23
6.78	20.0	Flexure	KIP-FT	2697.14	132.17	212.02	5.486	197.51	9.162	329.84
6.78	20.0	Shear	KIPS	370.61	14.64	31.27	5.179	186.43	8.648	311.33
6.78	**20.0**	**Overload**	**KSI**	**33.00**	**3.93**	**3.78**	**4.338**	**156.18**	**7.245**	**260.83**

10.17	30.0	Flexure	KIP-FT	2697.14	173.58	264.45	4.305	154.98	7.189	258.81
10.17	30.0	Shear	KIPS	370.61	9.79	26.00	6.340	228.23	10.587	381.14
10.17	**30.0**	**Overload**	**KSI**	**33.00**	**5.17**	**4.72**	**3.322**	**119.59**	**5.548**	**199.72**
13.56	40.0	Flexure	KIP-FT	2697.14	198.54	281.15	3.996	143.86	6.673	240.24
13.56	40.0	Shear	KIPS	370.61	4.94	20.73	8.091	291.27	13.512	486.42
13.56	**40.0**	**Overload**	**KSI**	**33.00**	**5.91**	**5.02**	**3.036**	**109.30**	**5.070**	**182.52**
16.95	50.0	Flexure	KIP-FT	2697.14	206.91	271.84	4.114	148.12	6.871	247.36
16.95	50.0	Shear	KIPS	370.61	0.08	15.46	11.036	397.28	18.429	663.46
16.95	**50.0**	**Overload**	**KSI**	**33.00**	**6.16**	**4.85**	**3.109**	**111.93**	**5.192**	**186.92**
20.34	60.0	Flexure	KIP-FT	2697.14	198.43	281.15	3.996	143.86	6.674	240.25
20.34	60.0	Shear	KIPS	370.61	4.93	20.73	8.091	291.28	13.512	486.43
20.34	**60.0**	**Overload**	**KSI**	**33.00**	**5.91**	**5.02**	**3.036**	**109.31**	**5.071**	**182.55**
23.73	70.0	Flexure	KIP-FT	2697.14	173.49	264.45	4.305	154.98	7.190	258.82
23.73	70.0	Shear	KIPS	370.61	9.78	26.00	6.340	228.23	10.587	381.15
23.73	**70.0**	**Overload**	**KSI**	**33.00**	**5.16**	**4.72**	**3.322**	**119.60**	**5.548**	**199.74**
27.12	80.0	Flexure	KIP-FT	2697.14	132.11	212.02	5.486	197.51	9.162	329.85
27.12	80.0	Shear	KIPS	370.61	14.63	31.27	5.179	186.43	8.648	311.34
27.12	**80.0**	**Overload**	**KSI**	**33.00**	**3.93**	**3.78**	**4.339**	**156.19**	**7.246**	**260.84**
30.51	90.0	Flexure	KIP-FT	2697.14	74.28	125.52	9.543	343.54	15.937	573.72
30.51	**90.0**	**Shear**	**KIPS**	**370.61**	**19.49**	**37.03**	**4.295**	**154.62**	**7.173**	**258.22**
30.51	90.0	Overload	KSI	33.00	2.21	2.24	7.788	280.39	13.007	468.24
33.90	100.0	Flexure	KIP-FT	2697.14	0.00	0.00	99.000	3564.00	99.000	3564.00
33.90	**100.0**	**Shear**	**KIPS**	**370.61**	**24.34**	**42.08**	**3.710**	**133.57**	**6.196**	**223.06**
33.90	100.0	Overload	KSI	-33.00	-0.00	-0.00	99.000	3564.00	99.000	3564.00

Detailed Rating Results
HS 20-44
Lane
Impact: As Requested
Lane: As Requested

Span 1

Location							Inventory Rating	Inventory Load Rating	Operating Rating	Operating Load Rating
(ft)	**Percent**	**Limit State**	**Units**	**Capacity**	**DL**	**LL**	**Factor**	**(Ton)**	**Factor**	**(Ton)**
0.00	0.0	Flexure	KIP-FT	2697.14	0.00	0.00	99.000	3564.00	99.000	3564.00

0.00	**0.0**	**Shear**	**KIPS**	**370.61**	**24.35**	**24.26**	**6.436**	**231.71**	**10.749**	**386.96**
0.00	0.0	Overload	KSI	-33.00	-0.00	-0.00	99.000	3564.00	99.000	3564.00
3.39	10.0	Flexure	KIP-FT	2697.14	74.31	72.46	16.531	595.13	27.607	993.86
3.39	**10.0**	**Shear**	**KIPS**	**370.61**	**19.49**	**26.50**	**6.002**	**216.06**	**10.023**	**360.82**
3.39	10.0	Overload	KSI	33.00	2.21	1.29	13.492	485.71	22.531	811.13
6.78	20.0	Flexure	KIP-FT	2697.14	132.17	128.82	9.030	325.08	15.080	542.88
6.78	**20.0**	**Shear**	**KIPS**	**370.61**	**14.64**	**22.84**	**7.090**	**255.25**	**11.841**	**426.27**
6.78	20.0	Overload	KSI	33.00	3.93	2.30	7.141	257.06	11.925	429.30
10.17	30.0	Flexure	KIP-FT	2697.14	173.58	169.07	6.733	242.40	11.245	404.80
10.17	30.0	Shear	KIPS	370.61	9.79	19.36	8.515	306.54	14.220	511.92
10.17	**30.0**	**Overload**	**KSI**	**33.00**	**5.17**	**3.02**	**5.196**	**187.05**	**8.677**	**312.38**
13.56	40.0	Flexure	KIP-FT	2697.14	198.54	193.23	5.814	209.31	9.710	349.55
13.56	40.0	Shear	KIPS	370.61	4.94	16.06	10.447	376.08	17.446	628.05
13.56	**40.0**	**Overload**	**KSI**	**33.00**	**5.91**	**3.45**	**4.417**	**159.03**	**7.377**	**265.58**
16.95	50.0	Flexure	KIP-FT	2697.14	206.91	201.28	5.557	200.04	9.280	334.07
16.95	50.0	Shear	KIPS	370.61	0.08	12.94	13.194	474.97	22.034	793.21
16.95	**50.0**	**Overload**	**KSI**	**33.00**	**6.16**	**3.59**	**4.199**	**151.17**	**7.013**	**252.46**
20.34	60.0	Flexure	KIP-FT	2697.14	198.43	193.23	5.815	209.33	9.710	349.57
20.34	60.0	Shear	KIPS	370.61	4.93	16.06	10.447	376.09	17.446	628.07
20.34	**60.0**	**Overload**	**KSI**	**33.00**	**5.91**	**3.45**	**4.418**	**159.05**	**7.378**	**265.61**
23.73	70.0	Flexure	KIP-FT	2697.14	173.49	169.07	6.734	242.41	11.245	404.82
23.73	70.0	Shear	KIPS	370.61	9.78	19.36	8.515	306.55	14.220	511.94
23.73	**70.0**	**Overload**	**KSI**	**33.00**	**5.16**	**3.02**	**5.196**	**187.07**	**8.678**	**312.41**
27.12	80.0	Flexure	KIP-FT	2697.14	132.11	128.82	9.030	325.09	15.080	542.89
27.12	**80.0**	**Shear**	**KIPS**	**370.61**	**14.63**	**22.84**	**7.091**	**255.26**	**11.841**	**426.28**
27.12	80.0	Overload	KSI	33.00	3.93	2.30	7.141	257.08	11.926	429.32
30.51	90.0	Flexure	KIP-FT	2697.14	74.28	72.46	16.532	595.14	27.608	993.88
30.51	**90.0**	**Shear**	**KIPS**	**370.61**	**19.49**	**26.50**	**6.002**	**216.07**	**10.023**	**360.83**
30.51	90.0	Overload	KSI	33.00	2.21	1.29	13.492	485.72	22.532	811.15
33.90	100.0	Flexure	KIP-FT	2697.14	0.00	0.00	99.000	3564.00	99.000	3564.00
33.90	**100.0**	**Shear**	**KIPS**	**370.61**	**24.34**	**24.26**	**6.437**	**231.72**	**10.749**	**386.97**
33.90	100.0	Overload	KSI	-33.00	-0.00	-0.00	99.000	3564.00	99.000	3564.00

Bridge Name: 1031529
NBI Structure ID: 1031529
Bridge ID: 1031529

Analyzed By: BrR
Analyze Date: Tuesday, April 15, 2014 10:54:17
Analysis Engine: AASHTO LFR Engine Version 6.5.0.3001
Analysis Preference Setting: None

Report By: brr
Report Date: Tuesday, April 15, 2014 11:13:05

Structure Definition Name: Span 1 (SB)
Member Name: G2 (S2 plan designation)
Member Alternative Name: 5% Section Loss

Load Factor Rating Summary

Live Load		Rating Factor	Controls	Capacity (Ton)	Location Span	Location (ft)	Location Percent	Impact	Lane
H 20-44	Inventory	3.045	Service - Steel	60.90	1	16.95	50.0	As Requested	As Requested
	Operating	5.085	Service - Steel	101.70	1	16.95	50.0	As Requested	As Requested
HS 20-44	Inventory	2.543	Service - Steel	91.56	1	13.56	40.0	As Requested	As Requested
	Operating	4.247	Service - Steel	152.90	1	13.56	40.0	As Requested	As Requested

Note:
"N/A" indicates not applicable
"**" indicates not available

Individual Vehicle Load Factor Rating Summary

Live Load		Vehicle Type	Rating Factor	Controls	Capacity (Ton)	Location Span	(ft)	Percent	Impact	Lane
H 20-44	Inventory	Lane	3.525	Service - Steel	70.49	1	16.95	50.0	As Requested	As Requested
	Operating	Lane	5.886	Service - Steel	117.72	1	16.95	50.0	As Requested	As Requested
H 20-44	Inventory	Axle Load	3.045	Service - Steel	60.90	1	16.95	50.0	As Requested	As Requested
	Operating	Axle Load	5.085	Service - Steel	101.70	1	16.95	50.0	As Requested	As Requested

Note:
"N/A" indicates not applicable
"**" indicates not available

Reactions
Live Load H 20-44

Support	Stage 1 DL (kip)	Stage 2 DL (kip)	+(LL+I) (kip)	-(LL+I) (kip)	Reaction +IF (%)	Reaction -IF (%)
1	16.42	N/A	39.33(L)	0.00(L)	30.000	0.000
2	16.44	N/A	39.33(L)	0.00(L)	30.000	0.000

Note:
"N/A" indicates not applicable
"**" indicates not available

LL Codes:
(T) Truck load controls
(L) Lane load controls

Note:
Impact and distribution factors included in above live load reactions.

Moments
Live Load H 20-44

Span 1

Location (ft)	Percent	Stage 1 DL (kip-ft)	Stage 2 DL (kip-ft)	+(LL+I) (kip-ft)	-(LL+I) (kip-ft)	+Impact Factor (%)	-Impact Factor (%)
0.00	0.0	0.00	N/A	-0.00(L)	-0.00(L)	**	**
3.39	10.0	49.40	N/A	97.11(T)	0.00(L)	**	**
6.78	20.0	87.95	N/A	170.47(T)	0.00(L)	**	**
10.17	30.0	115.65	N/A	220.06(T)	0.00(L)	**	**
13.56	40.0	132.48	N/A	245.89(T)	0.00(L)	**	**
16.04	47.3	137.92	N/A	249.73(T)	0.00(L)	**	**
16.95	50.0	138.32	N/A	247.95(T)	0.00(L)	**	**
17.20	50.7	138.29	N/A	248.61(T)	0.00(L)	**	**
20.34	60.0	132.40	N/A	245.89(T)	0.00(L)	**	**
23.73	70.0	115.58	N/A	220.06(T)	0.00(L)	**	**
27.12	80.0	87.91	N/A	170.47(T)	0.00(L)	**	**
30.51	90.0	49.38	N/A	97.11(T)	0.00(L)	**	**
33.90	100.0	0.00	N/A	0.00(L)	0.00(L)	**	**

Note:
"N/A" indicates not applicable
"**" indicates not available

LL Codes:
(T) Truck load controls
(L) Lane load controls

Note:
Impact and distribution factors included in above live load moments.

Shears
Live Load H 20-44

Span 1

Location (ft)	Percent	Stage 1 DL (kip)	Stage 2 DL (kip)	+(LL+I) (kip)	-(LL+I) (kip)	+Impact Factor (%)	-Impact Factor (%)
0.00	0.0	16.17	N/A	38.27(T)	-0.00(L)	**	**
3.39	10.0	12.97	N/A	28.65(T)	-2.80(T)	**	**
6.78	20.0	9.77	N/A	25.14(T)	-5.61(T)	**	**
10.17	30.0	6.57	N/A	21.64(T)	-8.41(T)	**	**
13.56	40.0	3.37	N/A	18.13(T)	-11.21(T)	**	**
16.04	47.3	1.02	N/A	15.57(T)	-13.69(T)	**	**
16.95	50.0	0.00	N/A	14.63(T)	-14.63(T)	**	**
17.20	50.7	-0.23	N/A	14.37(T)	-14.89(T)	**	**
20.34	60.0	-3.36	N/A	11.21(T)	-18.13(T)	**	**
23.73	70.0	-6.56	N/A	8.41(T)	-21.64(T)	**	**
27.12	80.0	-9.76	N/A	5.61(T)	-25.14(T)	**	**
30.51	90.0	-12.97	N/A	2.80(T)	-28.65(T)	**	**
33.90	100.0	-16.17	N/A	-0.00(L)	-38.27(T)	**	**

Note:
"N/A" indicates not applicable
"**" indicates not available

LL Codes:
(T) Truck load controls
(L) Lane load controls

Note:
Impact and distribution factors included in above live load shears.

Individual Vehicle Load Factor Rating Summary

Live Load		Vehicle Type	Rating Factor	Controls	Capacity (Ton)	Location Span	(ft)	Percent	Impact	Lane
HS 20-44	Inventory	Lane	3.525	Service - Steel	126.88	1	16.95	50.0	As Requested	As Requested
	Operating	Lane	5.886	Service - Steel	211.90	1	16.95	50.0	As Requested	As Requested
HS 20-44	Inventory	Axle Load	2.543	Service - Steel	91.56	1	13.56	40.0	As Requested	As Requested
	Operating	Axle Load	4.247	Service - Steel	152.90	1	13.56	40.0	As Requested	As Requested

Note:
"N/A" indicates not applicable
"**" indicates not available

Reactions
Live Load HS 20-44

Support	Stage 1 DL (kip)	Stage 2 DL (kip)	+(LL+I) (kip)	-(LL+I) (kip)	Reaction +IF (%)	Reaction -IF (%)
1	16.42	N/A	55.69(T)	0.00(L)	30.000	0.000
2	16.44	N/A	55.69(T)	0.00(L)	30.000	0.000

Note:
"N/A" indicates not applicable
"**" indicates not available

LL Codes:
(T) Truck load controls
(L) Lane load controls

Note:
Impact and distribution factors included in above live load reactions.

Moments
Live Load HS 20-44

Span 1

Location (ft)	Percent	Stage 1 DL (kip-ft)	Stage 2 DL (kip-ft)	+(LL+I) (kip-ft)	-(LL+I) (kip-ft)	+Impact Factor (%)	-Impact Factor (%)
0.00	0.0	0.00	N/A	-0.00(L)	-0.00(L)	**	**
3.39	10.0	49.40	N/A	133.59(T)	0.00(L)	**	**
6.78	20.0	87.95	N/A	225.64(T)	0.00(L)	**	**
10.17	30.0	115.65	N/A	281.44(T)	0.00(L)	**	**
13.56	40.0	132.48	N/A	299.21(T)	0.00(L)	**	**
16.04	47.3	137.92	N/A	295.67(T)	0.00(L)	**	**
16.95	50.0	138.32	N/A	289.31(T)	0.00(L)	**	**
17.20	50.7	138.29	N/A	291.36(T)	0.00(L)	**	**
20.34	60.0	132.40	N/A	299.21(T)	0.00(L)	**	**
23.73	70.0	115.58	N/A	281.44(T)	0.00(L)	**	**
27.12	80.0	87.91	N/A	225.64(T)	0.00(L)	**	**
30.51	90.0	49.38	N/A	133.59(T)	0.00(L)	**	**
33.90	100.0	0.00	N/A	0.00(L)	0.00(L)	**	**

Note:
"N/A" indicates not applicable
"**" indicates not available

LL Codes:
(T) Truck load controls
(L) Lane load controls

Note:
Impact and distribution factors included in above live load moments.

Shears
Live Load HS 20-44

Span 1

Location (ft)	Percent	Stage 1 DL (kip)	Stage 2 DL (kip)	+(LL+I) (kip)	-(LL+I) (kip)	+Impact Factor (%)	-Impact Factor (%)
0.00	0.0	16.17	N/A	51.83(T)	-0.00(L)	**	**
3.39	10.0	12.97	N/A	39.41(T)	-2.80(T)	**	**
6.78	20.0	9.77	N/A	33.28(T)	-5.61(T)	**	**
10.17	30.0	6.57	N/A	27.67(T)	-8.41(T)	**	**
13.56	40.0	3.37	N/A	22.07(T)	-11.21(T)	**	**
16.04	47.3	1.02	N/A	17.96(T)	-14.95(T)	**	**
16.95	50.0	0.00	N/A	16.46(T)	-16.46(T)	**	**
17.20	50.7	-0.23	N/A	16.04(T)	-16.87(T)	**	**
20.34	60.0	-3.36	N/A	11.21(T)	-22.07(T)	**	**
23.73	70.0	-6.56	N/A	8.41(T)	-27.67(T)	**	**
27.12	80.0	-9.76	N/A	5.61(T)	-33.28(T)	**	**
30.51	90.0	-12.97	N/A	2.80(T)	-39.41(T)	**	**
33.90	100.0	-16.17	N/A	-0.00(L)	-51.83(T)	**	**

Note:
"N/A" indicates not applicable
"**" indicates not available

LL Codes:
(T) Truck load controls
(L) Lane load controls

Note:
Impact and distribution factors included in above live load shears.

Cross Section Properties topic is not available for the specified analysis engine!

Report by Action: ☑ **Flexure** ☑ **Shear** ☑ **Overload** ☑ **Critical**

Detailed Rating Results
H 20-44
Axle Load
Impact: As Requested
Lane: As Requested

Span 1

Location (ft)	Percent	Limit State	Units	Capacity	DL	LL	Inventory Rating Factor	Inventory Load Rating (Ton)	Operating Rating Factor	Operating Load Rating (Ton)
0.00	0.0	Flexure	KIP-FT	2316.42	0.00	0.00	99.000	1980.00	99.000	1980.00
0.00	**0.0**	**Shear**	**KIPS**	**313.82**	**16.17**	**38.27**	**3.524**	**70.49**	**5.886**	**117.71**
0.00	0.0	Overload	KSI	-33.00	-0.00	-0.00	99.000	1980.00	99.000	1980.00
3.39	10.0	Flexure	KIP-FT	2316.42	49.40	97.11	10.682	213.65	17.839	356.79
3.39	**10.0**	**Shear**	**KIPS**	**313.82**	**12.97**	**28.65**	**4.775**	**95.49**	**7.974**	**159.48**
3.39	10.0	Overload	KSI	33.00	1.77	2.03	8.711	174.22	14.547	290.94
6.78	20.0	Flexure	KIP-FT	2316.42	87.95	170.47	5.950	119.00	9.937	198.74
6.78	20.0	Shear	KIPS	313.82	9.77	25.14	5.517	110.33	9.213	184.25
6.78	**20.0**	**Overload**	**KSI**	**33.00**	**3.15**	**3.57**	**4.731**	**94.62**	**7.901**	**158.02**
10.17	30.0	Flexure	KIP-FT	2316.42	115.65	220.06	4.534	90.68	7.572	151.43
10.17	30.0	Shear	KIPS	313.82	6.57	21.64	6.499	129.97	10.853	217.06
10.17	**30.0**	**Overload**	**KSI**	**33.00**	**4.14**	**4.61**	**3.536**	**70.73**	**5.906**	**118.11**
13.56	40.0	Flexure	KIP-FT	2316.42	132.48	245.89	4.017	80.33	6.708	134.16
13.56	40.0	Shear	KIPS	313.82	3.37	18.13	7.860	157.21	13.127	262.54
13.56	**40.0**	**Overload**	**KSI**	**33.00**	**4.74**	**5.15**	**3.095**	**61.90**	**5.168**	**103.37**
16.95	50.0	Flexure	KIP-FT	2316.42	138.32	247.95	3.969	79.38	6.628	132.57
16.95	50.0	Shear	KIPS	313.82	0.00	14.63	9.881	197.63	16.502	330.03
16.95	**50.0**	**Overload**	**KSI**	**33.00**	**4.95**	**5.19**	**3.045**	**60.90**	**5.085**	**101.70**
20.34	60.0	Flexure	KIP-FT	2316.42	132.40	245.89	4.017	80.34	6.708	134.16
20.34	60.0	Shear	KIPS	313.82	3.36	18.13	7.861	157.21	13.127	262.55
20.34	**60.0**	**Overload**	**KSI**	**33.00**	**4.74**	**5.15**	**3.095**	**61.90**	**5.169**	**103.38**
23.73	70.0	Flexure	KIP-FT	2316.42	115.58	220.06	4.534	90.68	7.572	151.44
23.73	70.0	Shear	KIPS	313.82	6.56	21.64	6.499	129.98	10.853	217.06
23.73	**70.0**	**Overload**	**KSI**	**33.00**	**4.13**	**4.61**	**3.537**	**70.73**	**5.906**	**118.12**

27.12	80.0	Flexure	KIP-FT	2316.42	87.91	170.47	5.950	119.01	9.937	198.74
27.12	80.0	Shear	KIPS	313.82	9.76	25.14	5.517	110.33	9.213	184.26
27.12	**80.0**	**Overload**	**KSI**	**33.00**	**3.14**	**3.57**	**4.731**	**94.63**	**7.902**	**158.03**
30.51	90.0	Flexure	KIP-FT	2316.42	49.38	97.11	10.682	213.65	17.840	356.79
30.51	**90.0**	**Shear**	**KIPS**	**313.82**	**12.97**	**28.65**	**4.775**	**95.50**	**7.974**	**159.48**
30.51	90.0	Overload	KSI	33.00	1.77	2.03	8.711	174.22	14.547	290.95
33.90	100.0	Flexure	KIP-FT	2316.42	0.00	0.00	99.000	1980.00	99.000	1980.00
33.90	**100.0**	**Shear**	**KIPS**	**313.82**	**16.17**	**38.27**	**3.524**	**70.49**	**5.886**	**117.72**
33.90	100.0	Overload	KSI	-33.00	-0.00	-0.00	99.000	1980.00	99.000	1980.00

Detailed Rating Results
H 20-44
Lane
Impact: As Requested
Lane: As Requested

Span 1

Location							Inventory Rating	Inventory Load Rating	Operating Rating	Operating Load Rating
(ft)	**Percent**	**Limit State**	**Units**	**Capacity**	**DL**	**LL**	**Factor**	**(Ton)**	**Factor**	**(Ton)**
0.00	0.0	Flexure	KIP-FT	2316.42	0.00	0.00	99.000	1980.00	99.000	1980.00
0.00	**0.0**	**Shear**	**KIPS**	**313.82**	**16.17**	**37.25**	**3.620**	**72.40**	**6.046**	**120.91**
0.00	0.0	Overload	KSI	-33.00	-0.00	-0.00	99.000	1980.00	99.000	1980.00
3.39	10.0	Flexure	KIP-FT	2316.42	49.40	77.12	13.452	269.05	22.466	449.31
3.39	**10.0**	**Shear**	**KIPS**	**313.82**	**12.97**	**28.20**	**4.850**	**97.01**	**8.100**	**162.00**
3.39	10.0	Overload	KSI	33.00	1.77	1.61	10.970	219.40	18.320	366.39
6.78	20.0	Flexure	KIP-FT	2316.42	87.95	137.09	7.399	147.97	12.356	247.11
6.78	**20.0**	**Shear**	**KIPS**	**313.82**	**9.77**	**24.31**	**5.706**	**114.12**	**9.529**	**190.59**
6.78	20.0	Overload	KSI	33.00	3.15	2.87	5.883	117.66	9.824	196.49
10.17	30.0	Flexure	KIP-FT	2316.42	115.65	179.94	5.545	110.90	9.260	185.20
10.17	30.0	Shear	KIPS	313.82	6.57	20.60	6.825	136.50	11.398	227.95
10.17	**30.0**	**Overload**	**KSI**	**33.00**	**4.14**	**3.77**	**4.325**	**86.50**	**7.222**	**144.45**
13.56	40.0	Flexure	KIP-FT	2316.42	132.48	205.64	4.803	96.06	8.021	160.41
13.56	40.0	Shear	KIPS	313.82	3.37	17.09	8.340	166.81	13.928	278.57
13.56	**40.0**	**Overload**	**KSI**	**33.00**	**4.74**	**4.31**	**3.700**	**74.01**	**6.180**	**123.59**
16.95	50.0	Flexure	KIP-FT	2316.42	138.32	214.21	4.594	91.89	7.673	153.45

16.95	50.0	Shear	KIPS	313.82	0.00	13.77	10.500	210.00	17.535	350.71
16.95	**50.0**	**Overload**	**KSI**	**33.00**	**4.95**	**4.49**	**3.525**	**70.49**	**5.886**	**117.72**
20.34	60.0	Flexure	KIP-FT	2316.42	132.40	205.64	4.803	96.06	8.021	160.42
20.34	60.0	Shear	KIPS	313.82	3.36	17.09	8.341	166.81	13.929	278.58
20.34	**60.0**	**Overload**	**KSI**	**33.00**	**4.74**	**4.31**	**3.701**	**74.02**	**6.180**	**123.61**
23.73	70.0	Flexure	KIP-FT	2316.42	115.58	179.94	5.545	110.90	9.260	185.21
23.73	70.0	Shear	KIPS	313.82	6.56	20.60	6.825	136.50	11.398	227.96
23.73	**70.0**	**Overload**	**KSI**	**33.00**	**4.13**	**3.77**	**4.325**	**86.50**	**7.223**	**144.46**
27.12	80.0	Flexure	KIP-FT	2316.42	87.91	137.09	7.399	147.98	12.356	247.12
27.12	**80.0**	**Shear**	**KIPS**	**313.82**	**9.76**	**24.31**	**5.706**	**114.13**	**9.530**	**190.59**
27.12	80.0	Overload	KSI	33.00	3.14	2.87	5.883	117.66	9.825	196.50
30.51	90.0	Flexure	KIP-FT	2316.42	49.38	77.12	13.453	269.05	22.466	449.32
30.51	**90.0**	**Shear**	**KIPS**	**313.82**	**12.97**	**28.20**	**4.850**	**97.01**	**8.100**	**162.00**
30.51	90.0	Overload	KSI	33.00	1.77	1.61	10.970	219.40	18.320	366.40
33.90	100.0	Flexure	KIP-FT	2316.42	0.00	0.00	99.000	1980.00	99.000	1980.00
33.90	**100.0**	**Shear**	**KIPS**	**313.82**	**16.17**	**37.25**	**3.620**	**72.41**	**6.046**	**120.92**
33.90	100.0	Overload	KSI	-33.00	-0.00	-0.00	99.000	1980.00	99.000	1980.00

Detailed Rating Results
HS 20-44
Axle Load
Impact: As Requested
Lane: As Requested

Span 1

Location							Inventory Rating	Inventory Load Rating	Operating Rating	Operating Load Rating
(ft)	**Percent**	**Limit State**	**Units**	**Capacity**	**DL**	**LL**	**Factor**	**(Ton)**	**Factor**	**(Ton)**
0.00	0.0	Flexure	KIP-FT	2316.42	0.00	0.00	99.000	3564.00	99.000	3564.00
0.00	**0.0**	**Shear**	**KIPS**	**313.82**	**16.17**	**51.83**	**2.602**	**93.67**	**4.345**	**156.43**
0.00	0.0	Overload	KSI	-33.00	-0.00	-0.00	99.000	3564.00	99.000	3564.00
3.39	10.0	Flexure	KIP-FT	2316.42	49.40	133.59	7.766	279.56	12.968	466.86
3.39	**10.0**	**Shear**	**KIPS**	**313.82**	**12.97**	**39.41**	**3.471**	**124.96**	**5.797**	**208.68**
3.39	10.0	Overload	KSI	33.00	1.77	2.80	6.332	227.97	10.575	380.70
6.78	20.0	Flexure	KIP-FT	2316.42	87.95	225.64	4.495	161.83	7.507	270.25
6.78	20.0	Shear	KIPS	313.82	9.77	33.28	4.168	150.03	6.960	250.56
6.78	**20.0**	**Overload**	**KSI**	**33.00**	**3.15**	**4.73**	**3.574**	**128.67**	**5.969**	**214.89**

10.17	30.0	Flexure	KIP-FT	2316.42	115.65	281.44	3.545	127.62	5.920	213.13
10.17	30.0	Shear	KIPS	313.82	6.57	27.67	5.081	182.93	8.486	305.49
10.17	**30.0**	**Overload**	**KSI**	**33.00**	**4.14**	**5.89**	**2.765**	**99.54**	**4.618**	**166.23**
13.56	40.0	Flexure	KIP-FT	2316.42	132.48	299.21	3.301	118.83	5.512	198.45
13.56	40.0	Shear	KIPS	313.82	3.37	22.07	6.460	232.54	10.787	388.35
13.56	**40.0**	**Overload**	**KSI**	**33.00**	**4.74**	**6.27**	**2.543**	**91.56**	**4.247**	**152.90**
16.95	50.0	Flexure	KIP-FT	2316.42	138.32	289.31	3.402	122.46	5.681	204.51
16.95	50.0	Shear	KIPS	313.82	0.00	16.46	8.783	316.18	14.667	528.01
16.95	**50.0**	**Overload**	**KSI**	**33.00**	**4.95**	**6.06**	**2.610**	**93.95**	**4.358**	**156.89**
20.34	60.0	Flexure	KIP-FT	2316.42	132.40	299.21	3.301	118.84	5.513	198.46
20.34	60.0	Shear	KIPS	313.82	3.36	22.07	6.460	232.55	10.788	388.36
20.34	**60.0**	**Overload**	**KSI**	**33.00**	**4.74**	**6.27**	**2.544**	**91.57**	**4.248**	**152.92**
23.73	70.0	Flexure	KIP-FT	2316.42	115.58	281.44	3.545	127.63	5.921	213.14
23.73	70.0	Shear	KIPS	313.82	6.56	27.67	5.081	182.93	8.486	305.50
23.73	**70.0**	**Overload**	**KSI**	**33.00**	**4.13**	**5.89**	**2.765**	**99.55**	**4.618**	**166.25**
27.12	80.0	Flexure	KIP-FT	2316.42	87.91	225.64	4.495	161.83	7.507	270.26
27.12	80.0	Shear	KIPS	313.82	9.76	33.28	4.168	150.04	6.960	250.56
27.12	**80.0**	**Overload**	**KSI**	**33.00**	**3.14**	**4.73**	**3.574**	**128.68**	**5.969**	**214.90**
30.51	90.0	Flexure	KIP-FT	2316.42	49.38	133.59	7.766	279.56	12.969	466.87
30.51	**90.0**	**Shear**	**KIPS**	**313.82**	**12.97**	**39.41**	**3.471**	**124.96**	**5.797**	**208.68**
30.51	90.0	Overload	KSI	33.00	1.77	2.80	6.333	227.97	10.575	380.71
33.90	100.0	Flexure	KIP-FT	2316.42	0.00	0.00	99.000	3564.00	99.000	3564.00
33.90	**100.0**	**Shear**	**KIPS**	**313.82**	**16.17**	**51.83**	**2.602**	**93.68**	**4.346**	**156.44**
33.90	100.0	Overload	KSI	-33.00	-0.00	-0.00	99.000	3564.00	99.000	3564.00

Detailed Rating Results
HS 20-44
Lane
Impact: As Requested
Lane: As Requested

Span 1

Location							Inventory Rating	Inventory Load Rating	Operating Rating	Operating Load Rating
(ft)	**Percent**	**Limit State**	**Units**	**Capacity**	**DL**	**LL**	**Factor**	**(Ton)**	**Factor**	**(Ton)**
0.00	0.0	Flexure	KIP-FT	2316.42	0.00	0.00	99.000	3564.00	99.000	3564.00

0.00	**0.0**	**Shear**	**KIPS**	**313.82**	**16.17**	**37.25**	**3.620**	**130.33**	**6.046**	**217.65**
0.00	0.0	Overload	KSI	-33.00	-0.00	-0.00	99.000	3564.00	99.000	3564.00
3.39	10.0	Flexure	KIP-FT	2316.42	49.40	77.12	13.452	484.29	22.466	808.76
3.39	**10.0**	**Shear**	**KIPS**	**313.82**	**12.97**	**28.20**	**4.850**	**174.61**	**8.100**	**291.60**
3.39	10.0	Overload	KSI	33.00	1.77	1.61	10.970	394.91	18.320	659.50
6.78	20.0	Flexure	KIP-FT	2316.42	87.95	137.09	7.399	266.35	12.356	444.81
6.78	**20.0**	**Shear**	**KIPS**	**313.82**	**9.77**	**24.31**	**5.706**	**205.42**	**9.529**	**343.05**
6.78	20.0	Overload	KSI	33.00	3.15	2.87	5.883	211.78	9.824	353.68
10.17	30.0	Flexure	KIP-FT	2316.42	115.65	179.94	5.545	199.62	9.260	333.36
10.17	30.0	Shear	KIPS	313.82	6.57	20.60	6.825	245.70	11.398	410.32
10.17	**30.0**	**Overload**	**KSI**	**33.00**	**4.14**	**3.77**	**4.325**	**155.69**	**7.222**	**260.01**
13.56	40.0	Flexure	KIP-FT	2316.42	132.48	205.64	4.803	172.90	8.021	288.74
13.56	40.0	Shear	KIPS	313.82	3.37	17.09	8.340	300.25	13.928	501.42
13.56	**40.0**	**Overload**	**KSI**	**33.00**	**4.74**	**4.31**	**3.700**	**133.22**	**6.180**	**222.47**
16.95	50.0	Flexure	KIP-FT	2316.42	138.32	214.21	4.594	165.40	7.673	276.21
16.95	50.0	Shear	KIPS	313.82	0.00	13.77	10.500	378.01	17.535	631.27
16.95	**50.0**	**Overload**	**KSI**	**33.00**	**4.95**	**4.49**	**3.525**	**126.88**	**5.886**	**211.90**
20.34	60.0	Flexure	KIP-FT	2316.42	132.40	205.64	4.803	172.91	8.021	288.76
20.34	60.0	Shear	KIPS	313.82	3.36	17.09	8.341	300.26	13.929	501.44
20.34	**60.0**	**Overload**	**KSI**	**33.00**	**4.74**	**4.31**	**3.701**	**133.23**	**6.180**	**222.50**
23.73	70.0	Flexure	KIP-FT	2316.42	115.58	179.94	5.545	199.62	9.260	333.37
23.73	70.0	Shear	KIPS	313.82	6.56	20.60	6.825	245.71	11.398	410.33
23.73	**70.0**	**Overload**	**KSI**	**33.00**	**4.13**	**3.77**	**4.325**	**155.71**	**7.223**	**260.03**
27.12	80.0	Flexure	KIP-FT	2316.42	87.91	137.09	7.399	266.36	12.356	444.82
27.12	**80.0**	**Shear**	**KIPS**	**313.82**	**9.76**	**24.31**	**5.706**	**205.43**	**9.530**	**343.06**
27.12	80.0	Overload	KSI	33.00	3.14	2.87	5.883	211.80	9.825	353.70
30.51	90.0	Flexure	KIP-FT	2316.42	49.38	77.12	13.453	484.29	22.466	808.77
30.51	**90.0**	**Shear**	**KIPS**	**313.82**	**12.97**	**28.20**	**4.850**	**174.62**	**8.100**	**291.61**
30.51	90.0	Overload	KSI	33.00	1.77	1.61	10.970	394.92	18.320	659.52
33.90	100.0	Flexure	KIP-FT	2316.42	0.00	0.00	99.000	3564.00	99.000	3564.00
33.90	**100.0**	**Shear**	**KIPS**	**313.82**	**16.17**	**37.25**	**3.620**	**130.33**	**6.046**	**217.65**
33.90	100.0	Overload	KSI	-33.00	-0.00	-0.00	99.000	3564.00	99.000	3564.00

Bridge Name: 1031529
NBI Structure ID: 1031529
Bridge ID: 1031529

Analyzed By: BrR
Analyze Date: Tuesday, April 15, 2014 10:54:17
Analysis Engine: AASHTO LFR Engine Version 6.5.0.3001
Analysis Preference Setting: None

Report By: brr
Report Date: Tuesday, April 15, 2014 11:13:06

Structure Definition Name: Span 1 (SB)
Member Name: G6 (S2 plan designation)
Member Alternative Name: 5% Section Loss

Load Factor Rating Summary

Live Load		Rating Factor	Controls	Capacity (Ton)	Location Span	Location (ft)	Location Percent	Impact	Lane
H 20-44	Inventory	3.027	Service - Steel	60.53	1	16.95	50.0	As Requested	As Requested
	Operating	5.054	Service - Steel	101.09	1	16.95	50.0	As Requested	As Requested
HS 20-44	Inventory	2.528	Service - Steel	91.02	1	13.56	40.0	As Requested	As Requested
	Operating	4.222	Service - Steel	152.00	1	13.56	40.0	As Requested	As Requested

Note:
"N/A" indicates not applicable
"**" indicates not available

Individual Vehicle Load Factor Rating Summary

Live Load		Vehicle Type	Rating Factor	Controls	Capacity (Ton)	Location Span	(ft)	Percent	Impact	Lane
H 20-44	Inventory	Lane	3.503	Service - Steel	70.07	1	16.95	50.0	As Requested	As Requested
	Operating	Lane	5.851	Service - Steel	117.01	1	16.95	50.0	As Requested	As Requested
H 20-44	Inventory	Axle Load	3.027	Service - Steel	60.53	1	16.95	50.0	As Requested	As Requested
	Operating	Axle Load	5.054	Service - Steel	101.09	1	16.95	50.0	As Requested	As Requested

Note:
"N/A" indicates not applicable
"**" indicates not available

Reactions
Live Load H 20-44

Support	Stage 1 DL (kip)	Stage 2 DL (kip)	+(LL+I) (kip)	-(LL+I) (kip)	Reaction +IF (%)	Reaction -IF (%)
1	16.42	N/A	39.49(L)	0.00(L)	30.000	0.000
2	16.44	N/A	39.49(L)	0.00(L)	30.000	0.000

Note:
"N/A" indicates not applicable
"**" indicates not available

LL Codes:
(T) Truck load controls
(L) Lane load controls

Note:
Impact and distribution factors included in above live load reactions.

Moments
Live Load H 20-44

Span 1

Location (ft)	Percent	Stage 1 DL (kip-ft)	Stage 2 DL (kip-ft)	+(LL+I) (kip-ft)	-(LL+I) (kip-ft)	+Impact Factor (%)	-Impact Factor (%)
0.00	0.0	0.00	N/A	-0.00(L)	-0.00(L)	**	**
3.39	10.0	49.40	N/A	97.11(T)	0.00(L)	**	**
6.78	20.0	87.95	N/A	170.47(T)	0.00(L)	**	**
10.17	30.0	115.65	N/A	220.06(T)	0.00(L)	**	**
13.56	40.0	132.48	N/A	245.89(T)	0.00(L)	**	**
16.04	47.3	137.92	N/A	249.73(T)	0.00(L)	**	**
16.95	50.0	138.32	N/A	247.95(T)	0.00(L)	**	**
17.20	50.7	138.29	N/A	248.61(T)	0.00(L)	**	**
20.34	60.0	132.40	N/A	245.89(T)	0.00(L)	**	**
23.73	70.0	115.58	N/A	220.06(T)	0.00(L)	**	**
27.12	80.0	87.91	N/A	170.47(T)	0.00(L)	**	**
30.51	90.0	49.38	N/A	97.11(T)	0.00(L)	**	**
33.90	100.0	0.00	N/A	0.00(L)	0.00(L)	**	**

Note:
"N/A" indicates not applicable
"**" indicates not available

LL Codes:
(T) Truck load controls
(L) Lane load controls

Note:
Impact and distribution factors included in above live load moments.

Shears
Live Load H 20-44

Span 1

Location (ft)	Percent	Stage 1 DL (kip)	Stage 2 DL (kip)	+(LL+I) (kip)	-(LL+I) (kip)	+Impact Factor (%)	-Impact Factor (%)
0.00	0.0	16.17	N/A	38.41(T)	-0.00(L)	**	**
3.39	10.0	12.97	N/A	28.65(T)	-2.80(T)	**	**
6.78	20.0	9.77	N/A	25.14(T)	-5.61(T)	**	**
10.17	30.0	6.57	N/A	21.64(T)	-8.41(T)	**	**
13.56	40.0	3.37	N/A	18.13(T)	-11.21(T)	**	**
16.04	47.3	1.02	N/A	15.57(T)	-13.69(T)	**	**
16.95	50.0	0.00	N/A	14.63(T)	-14.63(T)	**	**
17.20	50.7	-0.23	N/A	14.37(T)	-14.89(T)	**	**
20.34	60.0	-3.36	N/A	11.21(T)	-18.13(T)	**	**
23.73	70.0	-6.56	N/A	8.41(T)	-21.64(T)	**	**
27.12	80.0	-9.76	N/A	5.61(T)	-25.14(T)	**	**
30.51	90.0	-12.97	N/A	2.80(T)	-28.65(T)	**	**
33.90	100.0	-16.17	N/A	-0.00(L)	-38.41(T)	**	**

Note:
"N/A" indicates not applicable
"**" indicates not available

LL Codes:
(T) Truck load controls
(L) Lane load controls

Note:
Impact and distribution factors included in above live load shears.

Individual Vehicle Load Factor Rating Summary

Live Load		Vehicle Type	Rating Factor	Controls	Capacity (Ton)	Location Span	(ft)	Percent	Impact	Lane
HS 20-44	Inventory	Lane	3.503	Service - Steel	126.12	1	16.95	50.0	As Requested	As Requested
	Operating	Lane	5.851	Service - Steel	210.62	1	16.95	50.0	As Requested	As Requested
HS 20-44	Inventory	Axle Load	2.528	Service - Steel	91.02	1	13.56	40.0	As Requested	As Requested
	Operating	Axle Load	4.222	Service - Steel	152.00	1	13.56	40.0	As Requested	As Requested

Note:
"N/A" indicates not applicable
"**" indicates not available

Reactions
Live Load HS 20-44

Support	Stage 1 DL (kip)	Stage 2 DL (kip)	+(LL+I) (kip)	-(LL+I) (kip)	Reaction +IF (%)	Reaction -IF (%)
1	16.42	N/A	55.92(T)	0.00(L)	30.000	0.000
2	16.44	N/A	55.92(T)	0.00(L)	30.000	0.000

Note:
"N/A" indicates not applicable
"**" indicates not available

LL Codes:
(T) Truck load controls
(L) Lane load controls

Note:
Impact and distribution factors included in above live load reactions.

Moments
Live Load HS 20-44

Span 1

Location (ft)	Percent	Stage 1 DL (kip-ft)	Stage 2 DL (kip-ft)	+(LL+I) (kip-ft)	-(LL+I) (kip-ft)	+Impact Factor (%)	-Impact Factor (%)
0.00	0.0	0.00	N/A	-0.00(L)	-0.00(L)	**	**
3.39	10.0	49.40	N/A	133.59(T)	0.00(L)	**	**
6.78	20.0	87.95	N/A	225.64(T)	0.00(L)	**	**
10.17	30.0	115.65	N/A	281.44(T)	0.00(L)	**	**
13.56	40.0	132.48	N/A	299.21(T)	0.00(L)	**	**
16.04	47.3	137.92	N/A	295.67(T)	0.00(L)	**	**
16.95	50.0	138.32	N/A	289.31(T)	0.00(L)	**	**
17.20	50.7	138.29	N/A	291.36(T)	0.00(L)	**	**
20.34	60.0	132.40	N/A	299.21(T)	0.00(L)	**	**
23.73	70.0	115.58	N/A	281.44(T)	0.00(L)	**	**
27.12	80.0	87.91	N/A	225.64(T)	0.00(L)	**	**
30.51	90.0	49.38	N/A	133.59(T)	0.00(L)	**	**
33.90	100.0	0.00	N/A	0.00(L)	0.00(L)	**	**

Note:
"N/A" indicates not applicable
"**" indicates not available

LL Codes:
(T) Truck load controls
(L) Lane load controls

Note:
Impact and distribution factors included in above live load moments.

Shears
Live Load HS 20-44

Span 1

Location (ft)	Percent	Stage 1 DL (kip)	Stage 2 DL (kip)	+(LL+I) (kip)	-(LL+I) (kip)	+Impact Factor (%)	-Impact Factor (%)
0.00	0.0	16.17	N/A	51.98(T)	-0.00(L)	**	**
3.39	10.0	12.97	N/A	39.41(T)	-2.80(T)	**	**
6.78	20.0	9.77	N/A	33.28(T)	-5.61(T)	**	**
10.17	30.0	6.57	N/A	27.67(T)	-8.41(T)	**	**
13.56	40.0	3.37	N/A	22.07(T)	-11.21(T)	**	**
16.04	47.3	1.02	N/A	17.96(T)	-14.95(T)	**	**
16.95	50.0	0.00	N/A	16.46(T)	-16.46(T)	**	**
17.20	50.7	-0.23	N/A	16.04(T)	-16.87(T)	**	**
20.34	60.0	-3.36	N/A	11.21(T)	-22.07(T)	**	**
23.73	70.0	-6.56	N/A	8.41(T)	-27.67(T)	**	**
27.12	80.0	-9.76	N/A	5.61(T)	-33.28(T)	**	**
30.51	90.0	-12.97	N/A	2.80(T)	-39.41(T)	**	**
33.90	100.0	-16.17	N/A	-0.00(L)	-51.98(T)	**	**

Note:
"N/A" indicates not applicable
"**" indicates not available

LL Codes:
(T) Truck load controls
(L) Lane load controls

Note:
Impact and distribution factors included in above live load shears.

Cross Section Properties topic is not available for the specified analysis engine!

Report by Action: ☑ **Flexure** ☑ **Shear** ☑ **Overload** ☑ **Critical**

Detailed Rating Results
H 20-44
Axle Load
Impact: As Requested
Lane: As Requested

Span 1

Location (ft)	Percent	Limit State	Units	Capacity	DL	LL	Inventory Rating Factor	Inventory Load Rating (Ton)	Operating Rating Factor	Operating Load Rating (Ton)
0.00	0.0	Flexure	KIP-FT	2291.69	0.00	0.00	99.000	1980.00	99.000	1980.00
0.00	**0.0**	**Shear**	**KIPS**	**313.82**	**16.17**	**38.41**	**3.511**	**70.22**	**5.863**	**117.27**
0.00	0.0	Overload	KSI	-33.00	-0.00	-0.00	99.000	1980.00	99.000	1980.00
3.39	10.0	Flexure	KIP-FT	2291.69	49.40	97.11	10.565	211.30	17.644	352.87
3.39	**10.0**	**Shear**	**KIPS**	**313.82**	**12.97**	**28.65**	**4.775**	**95.49**	**7.974**	**159.48**
3.39	10.0	Overload	KSI	33.00	1.80	2.04	8.677	173.53	14.490	289.80
6.78	20.0	Flexure	KIP-FT	2291.69	87.95	170.47	5.883	117.67	9.825	196.51
6.78	20.0	Shear	KIPS	313.82	9.77	25.14	5.517	110.33	9.213	184.25
6.78	**20.0**	**Overload**	**KSI**	**33.00**	**3.20**	**3.58**	**4.709**	**94.17**	**7.863**	**157.27**
10.17	30.0	Flexure	KIP-FT	2291.69	115.65	220.06	4.482	89.64	7.485	149.71
10.17	30.0	Shear	KIPS	313.82	6.57	21.64	6.499	129.97	10.853	217.06
10.17	**30.0**	**Overload**	**KSI**	**33.00**	**4.20**	**4.62**	**3.517**	**70.34**	**5.874**	**117.47**
13.56	40.0	Flexure	KIP-FT	2291.69	132.48	245.89	3.970	79.41	6.631	132.61
13.56	40.0	Shear	KIPS	313.82	3.37	18.13	7.860	157.21	13.127	262.54
13.56	**40.0**	**Overload**	**KSI**	**33.00**	**4.82**	**5.16**	**3.077**	**61.53**	**5.138**	**102.76**
16.95	50.0	Flexure	KIP-FT	2291.69	138.32	247.95	3.923	78.46	6.552	131.03
16.95	50.0	Shear	KIPS	313.82	0.00	14.63	9.881	197.63	16.502	330.03
16.95	**50.0**	**Overload**	**KSI**	**33.00**	**5.03**	**5.21**	**3.027**	**60.53**	**5.054**	**101.09**
20.34	60.0	Flexure	KIP-FT	2291.69	132.40	245.89	3.971	79.41	6.631	132.62
20.34	60.0	Shear	KIPS	313.82	3.36	18.13	7.861	157.21	13.127	262.55
20.34	**60.0**	**Overload**	**KSI**	**33.00**	**4.81**	**5.16**	**3.077**	**61.54**	**5.139**	**102.77**
23.73	70.0	Flexure	KIP-FT	2291.69	115.58	220.06	4.482	89.65	7.486	149.71
23.73	70.0	Shear	KIPS	313.82	6.56	21.64	6.499	129.98	10.853	217.06
23.73	**70.0**	**Overload**	**KSI**	**33.00**	**4.20**	**4.62**	**3.517**	**70.35**	**5.874**	**117.48**

27.12	80.0	Flexure	KIP-FT	2291.69	87.91	170.47	5.884	117.67	9.826	196.51
27.12	80.0	Shear	KIPS	313.82	9.76	25.14	5.517	110.33	9.213	184.26
27.12	**80.0**	**Overload**	**KSI**	**33.00**	**3.20**	**3.58**	**4.709**	**94.18**	**7.864**	**157.28**
30.51	90.0	Flexure	KIP-FT	2291.69	49.38	97.11	10.565	211.30	17.644	352.87
30.51	**90.0**	**Shear**	**KIPS**	**313.82**	**12.97**	**28.65**	**4.775**	**95.50**	**7.974**	**159.48**
30.51	90.0	Overload	KSI	33.00	1.80	2.04	8.677	173.54	14.490	289.81
33.90	100.0	Flexure	KIP-FT	2291.69	0.00	0.00	99.000	1980.00	99.000	1980.00
33.90	**100.0**	**Shear**	**KIPS**	**313.82**	**16.17**	**38.41**	**3.511**	**70.22**	**5.864**	**117.27**
33.90	100.0	Overload	KSI	-33.00	-0.00	-0.00	99.000	1980.00	99.000	1980.00

Detailed Rating Results
H 20-44
Lane
Impact: As Requested
Lane: As Requested

Span 1

Location							Inventory Rating	Inventory Load Rating	Operating Rating	Operating Load Rating
(ft)	**Percent**	**Limit State**	**Units**	**Capacity**	**DL**	**LL**	**Factor**	**(Ton)**	**Factor**	**(Ton)**
0.00	0.0	Flexure	KIP-FT	2291.69	0.00	0.00	99.000	1980.00	99.000	1980.00
0.00	**0.0**	**Shear**	**KIPS**	**313.82**	**16.17**	**37.37**	**3.609**	**72.18**	**6.027**	**120.53**
0.00	0.0	Overload	KSI	-33.00	-0.00	-0.00	99.000	1980.00	99.000	1980.00
3.39	10.0	Flexure	KIP-FT	2291.69	49.40	77.12	13.305	266.10	22.219	444.38
3.39	**10.0**	**Shear**	**KIPS**	**313.82**	**12.97**	**28.20**	**4.850**	**97.01**	**8.100**	**162.00**
3.39	10.0	Overload	KSI	33.00	1.80	1.62	10.927	218.53	18.248	364.95
6.78	20.0	Flexure	KIP-FT	2291.69	87.95	137.09	7.316	146.31	12.217	244.34
6.78	**20.0**	**Shear**	**KIPS**	**313.82**	**9.77**	**24.31**	**5.706**	**114.12**	**9.529**	**190.59**
6.78	20.0	Overload	KSI	33.00	3.20	2.88	5.855	117.10	9.778	195.55
10.17	30.0	Flexure	KIP-FT	2291.69	115.65	179.94	5.482	109.63	9.154	183.09
10.17	30.0	Shear	KIPS	313.82	6.57	20.60	6.825	136.50	11.398	227.95
10.17	**30.0**	**Overload**	**KSI**	**33.00**	**4.20**	**3.78**	**4.301**	**86.03**	**7.183**	**143.66**
13.56	40.0	Flexure	KIP-FT	2291.69	132.48	205.64	4.747	94.95	7.928	158.56
13.56	40.0	Shear	KIPS	313.82	3.37	17.09	8.340	166.81	13.928	278.57
13.56	**40.0**	**Overload**	**KSI**	**33.00**	**4.82**	**4.32**	**3.679**	**73.57**	**6.144**	**122.87**
16.95	50.0	Flexure	KIP-FT	2291.69	138.32	214.21	4.541	90.82	7.584	151.68

16.95	50.0	Shear	KIPS	313.82	0.00	13.77	10.500	210.00	17.535	350.71
16.95	**50.0**	**Overload**	**KSI**	**33.00**	**5.03**	**4.50**	**3.503**	**70.07**	**5.851**	**117.01**
20.34	60.0	Flexure	KIP-FT	2291.69	132.40	205.64	4.748	94.95	7.929	158.57
20.34	60.0	Shear	KIPS	313.82	3.36	17.09	8.341	166.81	13.929	278.58
20.34	**60.0**	**Overload**	**KSI**	**33.00**	**4.81**	**4.32**	**3.679**	**73.58**	**6.144**	**122.88**
23.73	70.0	Flexure	KIP-FT	2291.69	115.58	179.94	5.482	109.64	9.155	183.09
23.73	70.0	Shear	KIPS	313.82	6.56	20.60	6.825	136.50	11.398	227.96
23.73	**70.0**	**Overload**	**KSI**	**33.00**	**4.20**	**3.78**	**4.302**	**86.03**	**7.184**	**143.67**
27.12	80.0	Flexure	KIP-FT	2291.69	87.91	137.09	7.316	146.31	12.217	244.35
27.12	**80.0**	**Shear**	**KIPS**	**313.82**	**9.76**	**24.31**	**5.706**	**114.13**	**9.530**	**190.59**
27.12	80.0	Overload	KSI	33.00	3.20	2.88	5.855	117.10	9.778	195.56
30.51	90.0	Flexure	KIP-FT	2291.69	49.38	77.12	13.305	266.10	22.219	444.39
30.51	**90.0**	**Shear**	**KIPS**	**313.82**	**12.97**	**28.20**	**4.850**	**97.01**	**8.100**	**162.00**
30.51	90.0	Overload	KSI	33.00	1.80	1.62	10.927	218.54	18.248	364.96
33.90	100.0	Flexure	KIP-FT	2291.69	0.00	0.00	99.000	1980.00	99.000	1980.00
33.90	**100.0**	**Shear**	**KIPS**	**313.82**	**16.17**	**37.37**	**3.609**	**72.18**	**6.027**	**120.54**
33.90	100.0	Overload	KSI	-33.00	-0.00	-0.00	99.000	1980.00	99.000	1980.00

Detailed Rating Results
HS 20-44
Axle Load
Impact: As Requested
Lane: As Requested

Span 1

Location							Inventory Rating	Inventory Load Rating	Operating Rating	Operating Load Rating
(ft)	**Percent**	**Limit State**	**Units**	**Capacity**	**DL**	**LL**	**Factor**	**(Ton)**	**Factor**	**(Ton)**
0.00	0.0	Flexure	KIP-FT	2291.69	0.00	0.00	99.000	3564.00	99.000	3564.00
0.00	**0.0**	**Shear**	**KIPS**	**313.82**	**16.17**	**51.98**	**2.595**	**93.41**	**4.333**	**156.00**
0.00	0.0	Overload	KSI	-33.00	-0.00	-0.00	99.000	3564.00	99.000	3564.00
3.39	10.0	Flexure	KIP-FT	2291.69	49.40	133.59	7.680	276.49	12.826	461.74
3.39	**10.0**	**Shear**	**KIPS**	**313.82**	**12.97**	**39.41**	**3.471**	**124.96**	**5.797**	**208.68**
3.39	10.0	Overload	KSI	33.00	1.80	2.81	6.307	227.07	10.533	379.21
6.78	20.0	Flexure	KIP-FT	2291.69	87.95	225.64	4.445	160.01	7.423	267.22
6.78	20.0	Shear	KIPS	313.82	9.77	33.28	4.168	150.03	6.960	250.56
6.78	**20.0**	**Overload**	**KSI**	**33.00**	**3.20**	**4.74**	**3.557**	**128.06**	**5.941**	**213.86**

10.17	30.0	Flexure	KIP-FT	2291.69	115.65	281.44	3.505	126.17	5.853	210.70
10.17	30.0	Shear	KIPS	313.82	6.57	27.67	5.081	182.93	8.486	305.49
10.17	**30.0**	**Overload**	**KSI**	**33.00**	**4.20**	**5.91**	**2.750**	**99.00**	**4.593**	**165.33**
13.56	40.0	Flexure	KIP-FT	2291.69	132.48	299.21	3.263	117.46	5.449	196.16
13.56	40.0	Shear	KIPS	313.82	3.37	22.07	6.460	232.54	10.787	388.35
13.56	**40.0**	**Overload**	**KSI**	**33.00**	**4.82**	**6.28**	**2.528**	**91.02**	**4.222**	**152.00**
16.95	50.0	Flexure	KIP-FT	2291.69	138.32	289.31	3.362	121.05	5.615	202.15
16.95	50.0	Shear	KIPS	313.82	0.00	16.46	8.783	316.18	14.667	528.01
16.95	**50.0**	**Overload**	**KSI**	**33.00**	**5.03**	**6.08**	**2.594**	**93.38**	**4.332**	**155.95**
20.34	60.0	Flexure	KIP-FT	2291.69	132.40	299.21	3.263	117.47	5.449	196.17
20.34	60.0	Shear	KIPS	313.82	3.36	22.07	6.460	232.55	10.788	388.36
20.34	**60.0**	**Overload**	**KSI**	**33.00**	**4.81**	**6.28**	**2.529**	**91.03**	**4.223**	**152.02**
23.73	70.0	Flexure	KIP-FT	2291.69	115.58	281.44	3.505	126.17	5.853	210.71
23.73	70.0	Shear	KIPS	313.82	6.56	27.67	5.081	182.93	8.486	305.50
23.73	**70.0**	**Overload**	**KSI**	**33.00**	**4.20**	**5.91**	**2.750**	**99.01**	**4.593**	**165.34**
27.12	80.0	Flexure	KIP-FT	2291.69	87.91	225.64	4.445	160.01	7.423	267.22
27.12	80.0	Shear	KIPS	313.82	9.76	33.28	4.168	150.04	6.960	250.56
27.12	**80.0**	**Overload**	**KSI**	**33.00**	**3.20**	**4.74**	**3.557**	**128.07**	**5.941**	**213.87**
30.51	90.0	Flexure	KIP-FT	2291.69	49.38	133.59	7.680	276.49	12.826	461.74
30.51	**90.0**	**Shear**	**KIPS**	**313.82**	**12.97**	**39.41**	**3.471**	**124.96**	**5.797**	**208.68**
30.51	90.0	Overload	KSI	33.00	1.80	2.81	6.308	227.07	10.534	379.22
33.90	100.0	Flexure	KIP-FT	2291.69	0.00	0.00	99.000	3564.00	99.000	3564.00
33.90	**100.0**	**Shear**	**KIPS**	**313.82**	**16.17**	**51.98**	**2.595**	**93.41**	**4.333**	**156.00**
33.90	100.0	Overload	KSI	-33.00	-0.00	-0.00	99.000	3564.00	99.000	3564.00

Detailed Rating Results
HS 20-44
Lane
Impact: As Requested
Lane: As Requested

Span 1

Location							Inventory Rating	Inventory Load Rating	Operating Rating	Operating Load Rating
(ft)	**Percent**	**Limit State**	**Units**	**Capacity**	**DL**	**LL**	**Factor**	**(Ton)**	**Factor**	**(Ton)**
0.00	0.0	Flexure	KIP-FT	2291.69	0.00	0.00	99.000	3564.00	99.000	3564.00

0.00	**0.0**	**Shear**	**KIPS**	**313.82**	**16.17**	**37.37**	**3.609**	**129.92**	**6.027**	**216.96**
0.00	0.0	Overload	KSI	-33.00	-0.00	-0.00	99.000	3564.00	99.000	3564.00
3.39	10.0	Flexure	KIP-FT	2291.69	49.40	77.12	13.305	478.97	22.219	799.88
3.39	**10.0**	**Shear**	**KIPS**	**313.82**	**12.97**	**28.20**	**4.850**	**174.61**	**8.100**	**291.60**
3.39	10.0	Overload	KSI	33.00	1.80	1.62	10.927	393.36	18.248	656.91
6.78	20.0	Flexure	KIP-FT	2291.69	87.95	137.09	7.316	263.36	12.217	439.81
6.78	**20.0**	**Shear**	**KIPS**	**313.82**	**9.77**	**24.31**	**5.706**	**205.42**	**9.529**	**343.05**
6.78	20.0	Overload	KSI	33.00	3.20	2.88	5.855	210.77	9.778	351.99
10.17	30.0	Flexure	KIP-FT	2291.69	115.65	179.94	5.482	197.34	9.154	329.55
10.17	30.0	Shear	KIPS	313.82	6.57	20.60	6.825	245.70	11.398	410.32
10.17	**30.0**	**Overload**	**KSI**	**33.00**	**4.20**	**3.78**	**4.301**	**154.85**	**7.183**	**258.59**
13.56	40.0	Flexure	KIP-FT	2291.69	132.48	205.64	4.747	170.91	7.928	285.41
13.56	40.0	Shear	KIPS	313.82	3.37	17.09	8.340	300.25	13.928	501.42
13.56	**40.0**	**Overload**	**KSI**	**33.00**	**4.82**	**4.32**	**3.679**	**132.43**	**6.144**	**221.17**
16.95	50.0	Flexure	KIP-FT	2291.69	138.32	214.21	4.541	163.48	7.584	273.02
16.95	50.0	Shear	KIPS	313.82	0.00	13.77	10.500	378.01	17.535	631.27
16.95	**50.0**	**Overload**	**KSI**	**33.00**	**5.03**	**4.50**	**3.503**	**126.12**	**5.851**	**210.62**
20.34	60.0	Flexure	KIP-FT	2291.69	132.40	205.64	4.748	170.91	7.929	285.43
20.34	60.0	Shear	KIPS	313.82	3.36	17.09	8.341	300.26	13.929	501.44
20.34	**60.0**	**Overload**	**KSI**	**33.00**	**4.81**	**4.32**	**3.679**	**132.45**	**6.144**	**221.19**
23.73	70.0	Flexure	KIP-FT	2291.69	115.58	179.94	5.482	197.35	9.155	329.57
23.73	70.0	Shear	KIPS	313.82	6.56	20.60	6.825	245.71	11.398	410.33
23.73	**70.0**	**Overload**	**KSI**	**33.00**	**4.20**	**3.78**	**4.302**	**154.86**	**7.184**	**258.61**
27.12	80.0	Flexure	KIP-FT	2291.69	87.91	137.09	7.316	263.37	12.217	439.82
27.12	**80.0**	**Shear**	**KIPS**	**313.82**	**9.76**	**24.31**	**5.706**	**205.43**	**9.530**	**343.06**
27.12	80.0	Overload	KSI	33.00	3.20	2.88	5.855	210.78	9.778	352.01
30.51	90.0	Flexure	KIP-FT	2291.69	49.38	77.12	13.305	478.98	22.219	799.89
30.51	**90.0**	**Shear**	**KIPS**	**313.82**	**12.97**	**28.20**	**4.850**	**174.62**	**8.100**	**291.61**
30.51	90.0	Overload	KSI	33.00	1.80	1.62	10.927	393.37	18.248	656.93
33.90	100.0	Flexure	KIP-FT	2291.69	0.00	0.00	99.000	3564.00	99.000	3564.00
33.90	**100.0**	**Shear**	**KIPS**	**313.82**	**16.17**	**37.37**	**3.609**	**129.92**	**6.027**	**216.96**
33.90	100.0	Overload	KSI	-33.00	-0.00	-0.00	99.000	3564.00	99.000	3564.00

Bridge Name: 1031529
NBI Structure ID: 1031529
Bridge ID: 1031529

Analyzed By: BrR
Analyze Date: Tuesday, April 15, 2014 10:54:17
Analysis Engine: AASHTO LFR Engine Version 6.5.0.3001
Analysis Preference Setting: None

Report By: brr
Report Date: Tuesday, April 15, 2014 11:13:06

Structure Definition Name: Span 1 (SB)
Member Name: G7 (S3 plan designation)
Member Alternative Name: 5% Section Loss

Load Factor Rating Summary

Live Load		Rating Factor	Controls	Capacity (Ton)	Location Span	Location (ft)	Location Percent	Impact	Lane
H 20-44	Inventory	2.886	Service - Steel	57.71	1	16.95	50.0	As Requested	As Requested
	Operating	4.819	Service - Steel	96.38	1	16.95	50.0	As Requested	As Requested
HS 20-44	Inventory	2.422	Service - Steel	87.19	1	20.34	60.0	As Requested	As Requested
	Operating	4.044	Service - Steel	145.60	1	20.34	60.0	As Requested	As Requested

Note:
"N/A" indicates not applicable
"**" indicates not available

Individual Vehicle Load Factor Rating Summary

Live Load		Vehicle Type	Rating Factor	Controls	Capacity (Ton)	Location Span	(ft)	Percent	Impact	Lane
H 20-44	Inventory	Lane	3.340	Service - Steel	66.81	1	16.95	50.0	As Requested	As Requested
	Operating	Lane	5.578	Service - Steel	111.56	1	16.95	50.0	As Requested	As Requested
H 20-44	Inventory	Axle Load	2.886	Service - Steel	57.71	1	16.95	50.0	As Requested	As Requested
	Operating	Axle Load	4.819	Service - Steel	96.38	1	16.95	50.0	As Requested	As Requested

Note:
"N/A" indicates not applicable
"**" indicates not available

Reactions
Live Load H 20-44

Support	Stage 1 DL (kip)	Stage 2 DL (kip)	+(LL+I) (kip)	-(LL+I) (kip)	Reaction +IF (%)	Reaction -IF (%)
1	24.24	N/A	22.06(L)	0.00(L)	30.000	0.000
2	24.26	N/A	22.06(L)	0.00(L)	30.000	0.000

Note:
"N/A" indicates not applicable
"**" indicates not available

LL Codes:
(T) Truck load controls
(L) Lane load controls

Note:
Impact and distribution factors included in above live load reactions.

Moments
Live Load H 20-44

Span 1

Location (ft)	Percent	Stage 1 DL (kip-ft)	Stage 2 DL (kip-ft)	+(LL+I) (kip-ft)	-(LL+I) (kip-ft)	+Impact Factor (%)	-Impact Factor (%)
0.00	0.0	-0.00	N/A	-0.00(L)	-0.00(L)	**	**
3.00	8.8	65.97	N/A	81.89(T)	0.00(L)	**	**
3.39	10.0	73.61	N/A	91.25(T)	0.00(L)	**	**
6.78	20.0	130.93	N/A	160.17(T)	0.00(L)	**	**
10.17	30.0	171.94	N/A	206.77(T)	0.00(L)	**	**
13.56	40.0	196.66	N/A	231.04(T)	0.00(L)	**	**
16.95	50.0	205.08	N/A	232.98(T)	0.00(L)	**	**
17.20	50.7	205.05	N/A	233.60(T)	0.00(L)	**	**
20.34	60.0	196.69	N/A	231.04(T)	0.00(L)	**	**
23.73	70.0	171.97	N/A	206.77(T)	0.00(L)	**	**
25.44	75.0	153.31	N/A	186.06(T)	0.00(L)	**	**
27.12	80.0	130.94	N/A	160.17(T)	0.00(L)	**	**
30.51	90.0	73.62	N/A	91.25(T)	0.00(L)	**	**
33.90	100.0	0.00	N/A	0.00(L)	0.00(L)	**	**

Note:
"N/A" indicates not applicable
"**" indicates not available

LL Codes:
(T) Truck load controls
(L) Lane load controls

Note:
Impact and distribution factors included in above live load moments.

Shears
Live Load H 20-44

Span 1

Location (ft)	Percent	Stage 1 DL (kip)	Stage 2 DL (kip)	+(LL+I) (kip)	-(LL+I) (kip)	+Impact Factor (%)	-Impact Factor (%)
0.00	0.0	24.12	N/A	26.11(T)	-0.00(L)	**	**
3.00	8.8	19.86	N/A	27.30(T)	-2.33(T)	**	**
3.39	10.0	19.31	N/A	26.92(T)	-2.63(T)	**	**
6.78	20.0	14.50	N/A	23.62(T)	-5.27(T)	**	**
10.17	30.0	9.69	N/A	20.33(T)	-7.90(T)	**	**
13.56	40.0	4.89	N/A	17.04(T)	-10.54(T)	**	**
16.95	50.0	0.08	N/A	13.75(T)	-13.75(T)	**	**
17.20	50.7	-0.28	N/A	13.50(T)	-13.99(T)	**	**
20.34	60.0	-4.89	N/A	10.54(T)	-17.04(T)	**	**
23.73	70.0	-9.70	N/A	7.90(T)	-20.33(T)	**	**
25.44	75.0	-12.12	N/A	6.57(T)	-21.99(T)	**	**
27.12	80.0	-14.51	N/A	5.27(T)	-23.62(T)	**	**
30.51	90.0	-19.31	N/A	2.63(T)	-26.92(T)	**	**
33.90	100.0	-24.12	N/A	-0.00(L)	-26.11(T)	**	**

Note:
"N/A" indicates not applicable
"**" indicates not available

LL Codes:
(T) Truck load controls
(L) Lane load controls

Note:
Impact and distribution factors included in above live load shears.

Individual Vehicle Load Factor Rating Summary

Live Load		Vehicle Type	Rating Factor	Controls	Capacity (Ton)	Location Span	(ft)	Percent	Impact	Lane
HS 20-44	Inventory	Lane	3.340	Service - Steel	120.25	1	16.95	50.0	As Requested	As Requested
	Operating	Lane	5.578	Service - Steel	200.82	1	16.95	50.0	As Requested	As Requested
HS 20-44	Inventory	Axle Load	2.422	Service - Steel	87.19	1	20.34	60.0	As Requested	As Requested
	Operating	Axle Load	4.044	Service - Steel	145.60	1	20.34	60.0	As Requested	As Requested

Note:
"N/A" indicates not applicable
"**" indicates not available

Reactions
Live Load HS 20-44

Support	Stage 1 DL (kip)	Stage 2 DL (kip)	+(LL+I) (kip)	-(LL+I) (kip)	Reaction +IF (%)	Reaction -IF (%)
1	24.24	N/A	31.23(T)	0.00(L)	30.000	0.000
2	24.26	N/A	31.23(T)	0.00(L)	30.000	0.000

Note:
"N/A" indicates not applicable
"**" indicates not available

LL Codes:
(T) Truck load controls
(L) Lane load controls

Note:
Impact and distribution factors included in above live load reactions.

Moments
Live Load HS 20-44

Span 1

Location (ft)	Percent	Stage 1 DL (kip-ft)	Stage 2 DL (kip-ft)	+(LL+I) (kip-ft)	-(LL+I) (kip-ft)	+Impact Factor (%)	-Impact Factor (%)
0.00	0.0	-0.00	N/A	-0.00(L)	-0.00(L)	**	**
3.00	8.8	65.97	N/A	113.13(T)	0.00(L)	**	**
3.39	10.0	73.61	N/A	125.52(T)	0.00(L)	**	**
6.78	20.0	130.93	N/A	212.02(T)	0.00(L)	**	**
10.17	30.0	171.94	N/A	264.45(T)	0.00(L)	**	**
13.56	40.0	196.66	N/A	281.15(T)	0.00(L)	**	**
16.95	50.0	205.08	N/A	271.84(T)	0.00(L)	**	**
17.20	50.7	205.05	N/A	273.77(T)	0.00(L)	**	**
20.34	60.0	196.69	N/A	281.15(T)	0.00(L)	**	**
23.73	70.0	171.97	N/A	264.45(T)	0.00(L)	**	**
25.44	75.0	153.31	N/A	242.47(T)	0.00(L)	**	**
27.12	80.0	130.94	N/A	212.02(T)	0.00(L)	**	**
30.51	90.0	73.62	N/A	125.52(T)	0.00(L)	**	**
33.90	100.0	0.00	N/A	0.00(L)	0.00(L)	**	**

Note:
"N/A" indicates not applicable
"**" indicates not available

LL Codes:
(T) Truck load controls
(L) Lane load controls

Note:
Impact and distribution factors included in above live load moments.

Shears
Live Load HS 20-44

Span 1

Location (ft)	Percent	Stage 1 DL (kip)	Stage 2 DL (kip)	+(LL+I) (kip)	-(LL+I) (kip)	+Impact Factor (%)	-Impact Factor (%)
0.00	0.0	24.12	N/A	42.08(T)	-0.00(L)	**	**
3.00	8.8	19.86	N/A	37.71(T)	-2.33(T)	**	**
3.39	10.0	19.31	N/A	37.03(T)	-2.63(T)	**	**
6.78	20.0	14.50	N/A	31.27(T)	-5.27(T)	**	**
10.17	30.0	9.69	N/A	26.00(T)	-7.90(T)	**	**
13.56	40.0	4.89	N/A	20.73(T)	-10.54(T)	**	**
16.95	50.0	0.08	N/A	15.46(T)	-15.46(T)	**	**
17.20	50.7	-0.28	N/A	15.08(T)	-15.85(T)	**	**
20.34	60.0	-4.89	N/A	10.54(T)	-20.73(T)	**	**
23.73	70.0	-9.70	N/A	7.90(T)	-26.00(T)	**	**
25.44	75.0	-12.12	N/A	6.57(T)	-28.66(T)	**	**
27.12	80.0	-14.51	N/A	5.27(T)	-31.27(T)	**	**
30.51	90.0	-19.31	N/A	2.63(T)	-37.03(T)	**	**
33.90	100.0	-24.12	N/A	-0.00(L)	-42.08(T)	**	**

Note:
"N/A" indicates not applicable
"**" indicates not available

LL Codes:
(T) Truck load controls
(L) Lane load controls

Note:
Impact and distribution factors included in above live load shears.

Cross Section Properties topic is not available for the specified analysis engine!

Report by Action: ☑ **Flexure** ☑ **Shear** ☑ **Overload** ☑ **Critical**

Detailed Rating Results
H 20-44
Axle Load
Impact: As Requested
Lane: As Requested

Span 1

Location (ft)	Percent	Limit State	Units	Capacity	DL	LL	Inventory Rating Factor	Inventory Load Rating (Ton)	Operating Rating Factor	Operating Load Rating (Ton)
0.00	0.0	Flexure	KIP-FT	2180.37	0.00	0.00	99.000	1980.00	99.000	1980.00
0.00	**0.0**	**Shear**	**KIPS**	**313.82**	**24.12**	**26.11**	**4.983**	**99.66**	**8.321**	**166.43**
0.00	0.0	Overload	KSI	-33.00	-0.00	-0.00	99.000	1980.00	99.000	1980.00
3.00	8.8	Flexure	KIP-FT	2180.37	65.97	81.89	11.782	235.64	19.676	393.52
3.00	**8.8**	**Shear**	**KIPS**	**313.82**	**19.86**	**27.30**	**4.860**	**97.20**	**8.116**	**162.32**
3.00	8.8	Overload	KSI	33.00	2.58	1.76	9.790	195.80	16.349	326.98
3.39	10.0	Flexure	KIP-FT	2261.91	73.61	91.25	10.935	218.69	18.261	365.22
3.39	**10.0**	**Shear**	**KIPS**	**313.82**	**19.31**	**26.92**	**4.941**	**98.81**	**8.251**	**165.01**
3.39	10.0	Overload	KSI	33.00	2.68	1.94	8.842	176.83	14.765	295.31
6.78	20.0	Flexure	KIP-FT	2261.91	130.93	160.17	6.015	120.30	10.045	200.91
6.78	20.0	Shear	KIPS	313.82	14.50	23.62	5.751	115.02	9.604	192.09
6.78	**20.0**	**Overload**	**KSI**	**33.00**	**4.76**	**3.41**	**4.671**	**93.42**	**7.800**	**156.01**
10.17	30.0	Flexure	KIP-FT	2261.91	171.94	206.77	4.541	90.82	7.583	151.66
10.17	30.0	Shear	KIPS	313.82	9.69	20.33	6.824	136.48	11.396	227.93
10.17	**30.0**	**Overload**	**KSI**	**33.00**	**6.25**	**4.40**	**3.415**	**68.31**	**5.704**	**114.08**
13.56	40.0	Flexure	KIP-FT	2261.91	196.66	231.04	4.000	80.00	6.680	133.59
13.56	40.0	Shear	KIPS	313.82	4.89	17.04	8.312	166.24	13.881	277.62
13.56	**40.0**	**Overload**	**KSI**	**33.00**	**7.15**	**4.92**	**2.947**	**58.94**	**4.922**	**98.44**
16.95	50.0	Flexure	KIP-FT	2261.91	205.08	232.98	3.945	78.90	6.588	131.76
16.95	50.0	Shear	KIPS	313.82	0.08	13.75	10.513	210.26	17.557	351.13
16.95	**50.0**	**Overload**	**KSI**	**33.00**	**7.46**	**4.96**	**2.886**	**57.71**	**4.819**	**96.38**
20.34	60.0	Flexure	KIP-FT	2261.91	196.69	231.04	4.000	79.99	6.680	133.59
20.34	60.0	Shear	KIPS	313.82	4.89	17.04	8.312	166.24	13.881	277.62
20.34	**60.0**	**Overload**	**KSI**	**33.00**	**7.15**	**4.92**	**2.947**	**58.94**	**4.922**	**98.43**

23.73	70.0	Flexure	KIP-FT	2261.91	171.97	206.77	4.541	90.82	7.583	151.66
23.73	70.0	Shear	KIPS	313.82	9.70	20.33	6.824	136.48	11.396	227.93
23.73	**70.0**	**Overload**	**KSI**	**33.00**	**6.25**	**4.40**	**3.415**	**68.31**	**5.704**	**114.07**
25.44	75.0	Flexure	KIP-FT	2250.33	153.31	186.06	5.078	101.55	8.480	169.59
25.44	75.0	Shear	KIPS	313.82	12.12	21.99	6.243	124.85	10.425	208.51
25.44	**75.0**	**Overload**	**KSI**	**33.00**	**5.62**	**3.97**	**3.885**	**77.71**	**6.489**	**129.77**
27.12	80.0	Flexure	KIP-FT	2250.33	130.94	160.17	5.982	119.64	9.990	199.79
27.12	80.0	Shear	KIPS	313.82	14.51	23.62	5.751	115.02	9.604	192.08
27.12	**80.0**	**Overload**	**KSI**	**33.00**	**4.80**	**3.41**	**4.657**	**93.14**	**7.777**	**155.55**
30.51	90.0	Flexure	KIP-FT	2250.33	73.62	91.25	10.876	217.52	18.163	363.26
30.51	**90.0**	**Shear**	**KIPS**	**313.82**	**19.31**	**26.92**	**4.941**	**98.81**	**8.251**	**165.01**
30.51	90.0	Overload	KSI	33.00	2.70	1.94	8.822	176.44	14.733	294.66
33.90	100.0	Flexure	KIP-FT	2250.33	0.00	0.00	99.000	1980.00	99.000	1980.00
33.90	**100.0**	**Shear**	**KIPS**	**313.82**	**24.12**	**26.11**	**4.983**	**99.66**	**8.321**	**166.43**
33.90	100.0	Overload	KSI	-33.00	-0.00	-0.00	99.000	1980.00	99.000	1980.00

Detailed Rating Results
H 20-44
Lane
Impact: As Requested
Lane: As Requested

Span 1

Location							Inventory Rating	Inventory Load Rating	Operating Rating	Operating Load Rating
(ft)	**Percent**	**Limit State**	**Units**	**Capacity**	**DL**	**LL**	**Factor**	**(Ton)**	**Factor**	**(Ton)**
0.00	0.0	Flexure	KIP-FT	2180.37	0.00	0.00	99.000	1980.00	99.000	1980.00
0.00	**0.0**	**Shear**	**KIPS**	**313.82**	**24.12**	**24.49**	**5.312**	**106.24**	**8.871**	**177.42**
0.00	0.0	Overload	KSI	-33.00	-0.00	-0.00	99.000	1980.00	99.000	1980.00
3.00	8.8	Flexure	KIP-FT	2180.37	65.97	64.94	14.856	297.12	24.810	496.20
3.00	**8.8**	**Shear**	**KIPS**	**313.82**	**19.86**	**26.93**	**4.926**	**98.52**	**8.226**	**164.52**
3.00	8.8	Overload	KSI	33.00	2.58	1.40	12.344	246.89	20.615	412.30
3.39	10.0	Flexure	KIP-FT	2261.91	73.61	72.46	13.770	275.41	22.997	459.93
3.39	**10.0**	**Shear**	**KIPS**	**313.82**	**19.31**	**26.50**	**5.019**	**100.37**	**8.381**	**167.63**
3.39	10.0	Overload	KSI	33.00	2.68	1.54	11.134	222.69	18.594	371.89
6.78	20.0	Flexure	KIP-FT	2261.91	130.93	128.82	7.479	149.59	12.491	249.81

6.78	20.0	Shear	KIPS	313.82	14.50	22.84	5.949	118.97	9.934	198.69
6.78	**20.0**	**Overload**	**KSI**	**33.00**	**4.76**	**2.74**	**5.808**	**116.16**	**9.699**	**193.99**
10.17	30.0	Flexure	KIP-FT	2261.91	171.94	169.07	5.553	111.07	9.274	185.48
10.17	30.0	Shear	KIPS	313.82	9.69	19.36	7.167	143.34	11.969	239.37
10.17	**30.0**	**Overload**	**KSI**	**33.00**	**6.25**	**3.60**	**4.177**	**83.54**	**6.976**	**139.51**
13.56	40.0	Flexure	KIP-FT	2261.91	196.66	193.23	4.783	95.65	7.987	159.74
13.56	40.0	Shear	KIPS	313.82	4.89	16.06	8.820	176.39	14.729	294.57
13.56	**40.0**	**Overload**	**KSI**	**33.00**	**7.15**	**4.11**	**3.524**	**70.48**	**5.885**	**117.70**
16.95	50.0	Flexure	KIP-FT	2261.91	205.08	201.28	4.566	91.32	7.626	152.51
16.95	50.0	Shear	KIPS	313.82	0.08	12.94	11.171	223.43	18.656	373.13
16.95	**50.0**	**Overload**	**KSI**	**33.00**	**7.46**	**4.28**	**3.340**	**66.81**	**5.578**	**111.56**
20.34	60.0	Flexure	KIP-FT	2261.91	196.69	193.23	4.782	95.65	7.987	159.73
20.34	60.0	Shear	KIPS	313.82	4.89	16.06	8.820	176.39	14.729	294.57
20.34	**60.0**	**Overload**	**KSI**	**33.00**	**7.15**	**4.11**	**3.524**	**70.48**	**5.885**	**117.70**
23.73	70.0	Flexure	KIP-FT	2261.91	171.97	169.07	5.553	111.06	9.274	185.48
23.73	70.0	Shear	KIPS	313.82	9.70	19.36	7.167	143.34	11.968	239.37
23.73	**70.0**	**Overload**	**KSI**	**33.00**	**6.25**	**3.60**	**4.177**	**83.54**	**6.975**	**139.51**
25.44	75.0	Flexure	KIP-FT	2250.33	153.31	150.78	6.266	125.31	10.464	209.27
25.44	75.0	Shear	KIPS	313.82	12.12	21.09	6.509	130.18	10.870	217.40
25.44	**75.0**	**Overload**	**KSI**	**33.00**	**5.62**	**3.21**	**4.794**	**95.89**	**8.007**	**160.13**
27.12	80.0	Flexure	KIP-FT	2250.33	130.94	128.82	7.438	148.76	12.421	248.43
27.12	80.0	Shear	KIPS	313.82	14.51	22.84	5.949	118.97	9.934	198.69
27.12	**80.0**	**Overload**	**KSI**	**33.00**	**4.80**	**2.75**	**5.791**	**115.81**	**9.670**	**193.41**
30.51	90.0	Flexure	KIP-FT	2250.33	73.62	72.46	13.697	273.93	22.873	457.47
30.51	**90.0**	**Shear**	**KIPS**	**313.82**	**19.31**	**26.50**	**5.019**	**100.37**	**8.381**	**167.62**
30.51	90.0	Overload	KSI	33.00	2.70	1.54	11.110	222.20	18.554	371.07
33.90	100.0	Flexure	KIP-FT	2250.33	0.00	0.00	99.000	1980.00	99.000	1980.00
33.90	**100.0**	**Shear**	**KIPS**	**313.82**	**24.12**	**24.49**	**5.312**	**106.24**	**8.871**	**177.42**
33.90	100.0	Overload	KSI	-33.00	-0.00	-0.00	99.000	1980.00	99.000	1980.00

Detailed Rating Results
HS 20-44
Axle Load
Impact: As Requested
Lane: As Requested

Span 1

Location (ft)	Percent	Limit State	Units	Capacity	DL	LL	Inventory Rating Factor	Inventory Load Rating (Ton)	Operating Rating Factor	Operating Load Rating (Ton)
0.00	0.0	Flexure	KIP-FT	2180.37	0.00	0.00	99.000	3564.00	99.000	3564.00
0.00	**0.0**	**Shear**	**KIPS**	**313.82**	**24.12**	**42.08**	**3.092**	**111.31**	**5.163**	**185.88**
0.00	0.0	Overload	KSI	-33.00	-0.00	-0.00	99.000	3564.00	99.000	3564.00
3.00	8.8	Flexure	KIP-FT	2180.37	65.97	113.13	8.528	307.02	14.242	512.73
3.00	**8.8**	**Shear**	**KIPS**	**313.82**	**19.86**	**37.71**	**3.518**	**126.64**	**5.875**	**211.49**
3.00	8.8	Overload	KSI	33.00	2.58	2.43	7.086	255.11	11.834	426.04
3.39	10.0	Flexure	KIP-FT	2261.91	73.61	125.52	7.949	286.16	13.275	477.89
3.39	**10.0**	**Shear**	**KIPS**	**313.82**	**19.31**	**37.03**	**3.592**	**129.30**	**5.998**	**215.92**
3.39	10.0	Overload	KSI	33.00	2.68	2.67	6.427	231.39	10.734	386.41
6.78	20.0	Flexure	KIP-FT	2261.91	130.93	212.02	4.544	163.59	7.589	273.20
6.78	20.0	Shear	KIPS	313.82	14.50	31.27	4.345	156.41	7.256	261.21
6.78	**20.0**	**Overload**	**KSI**	**33.00**	**4.76**	**4.51**	**3.529**	**127.03**	**5.893**	**212.15**
10.17	30.0	Flexure	KIP-FT	2261.91	171.94	264.45	3.551	127.82	5.929	213.46
10.17	30.0	Shear	KIPS	313.82	9.69	26.00	5.336	192.09	8.911	320.79
10.17	**30.0**	**Overload**	**KSI**	**33.00**	**6.25**	**5.63**	**2.671**	**96.14**	**4.460**	**160.55**
13.56	40.0	Flexure	KIP-FT	2261.91	196.66	281.15	3.287	118.33	5.489	197.61
13.56	40.0	Shear	KIPS	313.82	4.89	20.73	6.831	245.91	11.407	410.66
13.56	**40.0**	**Overload**	**KSI**	**33.00**	**7.15**	**5.98**	**2.422**	**87.19**	**4.045**	**145.61**
16.95	50.0	Flexure	KIP-FT	2261.91	205.08	271.84	3.381	121.71	5.646	203.26
16.95	50.0	Shear	KIPS	313.82	0.08	15.46	9.344	336.39	15.605	561.77
16.95	**50.0**	**Overload**	**KSI**	**33.00**	**7.46**	**5.79**	**2.473**	**89.04**	**4.130**	**148.69**
20.34	60.0	Flexure	KIP-FT	2261.91	196.69	281.15	3.287	118.33	5.489	197.61
20.34	60.0	Shear	KIPS	313.82	4.89	20.73	6.831	245.90	11.407	410.66
20.34	**60.0**	**Overload**	**KSI**	**33.00**	**7.15**	**5.98**	**2.422**	**87.19**	**4.044**	**145.60**
23.73	70.0	Flexure	KIP-FT	2261.91	171.97	264.45	3.550	127.82	5.929	213.45
23.73	70.0	Shear	KIPS	313.82	9.70	26.00	5.336	192.09	8.911	320.79
23.73	**70.0**	**Overload**	**KSI**	**33.00**	**6.25**	**5.63**	**2.670**	**96.14**	**4.460**	**160.55**
25.44	75.0	Flexure	KIP-FT	2250.33	153.31	242.47	3.896	140.27	6.507	234.25
25.44	75.0	Shear	KIPS	313.82	12.12	28.66	4.790	172.45	8.000	287.99
25.44	**75.0**	**Overload**	**KSI**	**33.00**	**5.62**	**5.17**	**2.981**	**107.33**	**4.979**	**179.24**
27.12	80.0	Flexure	KIP-FT	2250.33	130.94	212.02	4.519	162.69	7.547	271.69

27.12	80.0	Shear	KIPS	313.82	14.51	31.27	4.345	156.41	7.256	261.20
27.12	**80.0**	**Overload**	**KSI**	**33.00**	**4.80**	**4.52**	**3.518**	**126.66**	**5.876**	**211.52**
30.51	90.0	Flexure	KIP-FT	2250.33	73.62	125.52	7.906	284.63	13.204	475.34
30.51	**90.0**	**Shear**	**KIPS**	**313.82**	**19.31**	**37.03**	**3.592**	**129.29**	**5.998**	**215.92**
30.51	90.0	Overload	KSI	33.00	2.70	2.68	6.413	230.88	10.710	385.56
33.90	100.0	Flexure	KIP-FT	2250.33	0.00	0.00	99.000	3564.00	99.000	3564.00
33.90	**100.0**	**Shear**	**KIPS**	**313.82**	**24.12**	**42.08**	**3.092**	**111.31**	**5.163**	**185.88**
33.90	100.0	Overload	KSI	-33.00	-0.00	-0.00	99.000	3564.00	99.000	3564.00

Detailed Rating Results
HS 20-44
Lane
Impact: As Requested
Lane: As Requested

Span 1

Location							Inventory Rating	Inventory Load Rating	Operating Rating	Operating Load Rating
(ft)	**Percent**	**Limit State**	**Units**	**Capacity**	**DL**	**LL**	**Factor**	**(Ton)**	**Factor**	**(Ton)**
0.00	0.0	Flexure	KIP-FT	2180.37	0.00	0.00	99.000	3564.00	99.000	3564.00
0.00	**0.0**	**Shear**	**KIPS**	**313.82**	**24.12**	**24.49**	**5.312**	**191.24**	**8.871**	**319.36**
0.00	0.0	Overload	KSI	-33.00	-0.00	-0.00	99.000	3564.00	99.000	3564.00
3.00	8.8	Flexure	KIP-FT	2180.37	65.97	64.94	14.856	534.82	24.810	893.16
3.00	**8.8**	**Shear**	**KIPS**	**313.82**	**19.86**	**26.93**	**4.926**	**177.33**	**8.226**	**296.14**
3.00	8.8	Overload	KSI	33.00	2.58	1.40	12.344	444.40	20.615	742.15
3.39	10.0	Flexure	KIP-FT	2261.91	73.61	72.46	13.770	495.73	22.997	827.87
3.39	**10.0**	**Shear**	**KIPS**	**313.82**	**19.31**	**26.50**	**5.019**	**180.67**	**8.381**	**301.73**
3.39	10.0	Overload	KSI	33.00	2.68	1.54	11.134	400.84	18.594	669.40
6.78	20.0	Flexure	KIP-FT	2261.91	130.93	128.82	7.479	269.26	12.491	449.66
6.78	20.0	Shear	KIPS	313.82	14.50	22.84	5.949	214.15	9.934	357.64
6.78	**20.0**	**Overload**	**KSI**	**33.00**	**4.76**	**2.74**	**5.808**	**209.09**	**9.699**	**349.17**
10.17	30.0	Flexure	KIP-FT	2261.91	171.94	169.07	5.553	199.92	9.274	333.87
10.17	30.0	Shear	KIPS	313.82	9.69	19.36	7.167	258.01	11.969	430.87
10.17	**30.0**	**Overload**	**KSI**	**33.00**	**6.25**	**3.60**	**4.177**	**150.37**	**6.976**	**251.12**
13.56	40.0	Flexure	KIP-FT	2261.91	196.66	193.23	4.783	172.17	7.987	287.53
13.56	40.0	Shear	KIPS	313.82	4.89	16.06	8.820	317.51	14.729	530.23
13.56	**40.0**	**Overload**	**KSI**	**33.00**	**7.15**	**4.11**	**3.524**	**126.86**	**5.885**	**211.86**

16.95	50.0	Flexure	KIP-FT	2261.91	205.08	201.28	4.566	164.38	7.626	274.52
16.95	50.0	Shear	KIPS	313.82	0.08	12.94	11.171	402.17	18.656	671.63
16.95	**50.0**	**Overload**	**KSI**	**33.00**	**7.46**	**4.28**	**3.340**	**120.25**	**5.578**	**200.82**
20.34	60.0	Flexure	KIP-FT	2261.91	196.69	193.23	4.782	172.17	7.987	287.52
20.34	60.0	Shear	KIPS	313.82	4.89	16.06	8.820	317.50	14.729	530.23
20.34	**60.0**	**Overload**	**KSI**	**33.00**	**7.15**	**4.11**	**3.524**	**126.86**	**5.885**	**211.85**
23.73	70.0	Flexure	KIP-FT	2261.91	171.97	169.07	5.553	199.92	9.274	333.86
23.73	70.0	Shear	KIPS	313.82	9.70	19.36	7.167	258.00	11.968	430.87
23.73	**70.0**	**Overload**	**KSI**	**33.00**	**6.25**	**3.60**	**4.177**	**150.37**	**6.975**	**251.11**
25.44	75.0	Flexure	KIP-FT	2250.33	153.31	150.78	6.266	225.56	10.464	376.69
25.44	75.0	Shear	KIPS	313.82	12.12	21.09	6.509	234.32	10.870	391.32
25.44	**75.0**	**Overload**	**KSI**	**33.00**	**5.62**	**3.21**	**4.794**	**172.60**	**8.007**	**288.24**
27.12	80.0	Flexure	KIP-FT	2250.33	130.94	128.82	7.438	267.76	12.421	447.17
27.12	80.0	Shear	KIPS	313.82	14.51	22.84	5.949	214.15	9.934	357.63
27.12	**80.0**	**Overload**	**KSI**	**33.00**	**4.80**	**2.75**	**5.791**	**208.47**	**9.670**	**348.14**
30.51	90.0	Flexure	KIP-FT	2250.33	73.62	72.46	13.697	493.08	22.873	823.44
30.51	**90.0**	**Shear**	**KIPS**	**313.82**	**19.31**	**26.50**	**5.019**	**180.67**	**8.381**	**301.72**
30.51	90.0	Overload	KSI	33.00	2.70	1.54	11.110	399.96	18.554	667.93
33.90	100.0	Flexure	KIP-FT	2250.33	0.00	0.00	99.000	3564.00	99.000	3564.00
33.90	**100.0**	**Shear**	**KIPS**	**313.82**	**24.12**	**24.49**	**5.312**	**191.23**	**8.871**	**319.36**
33.90	100.0	Overload	KSI	-33.00	-0.00	-0.00	99.000	3564.00	99.000	3564.00

Bridge Name: 1031529
NBI Structure ID: 1031529
Bridge ID: 1031529

Analyzed By: BrR
Analyze Date: Tuesday, April 15, 2014 10:54:17
Analysis Engine: AASHTO LFR Engine Version 6.5.0.3001
Analysis Preference Setting: None

Report By: brr
Report Date: Tuesday, April 15, 2014 11:13:06

Structure Definition Name: Span 2 (SB)
Member Name: G1 (S7 plan designation)
Member Alternative Name: 5% Section Loss

Load Factor Rating Summary

Live Load		Rating Factor	Controls	Capacity (Ton)	Location Span	Location (ft)	Location Percent	Impact	Lane
H 20-44	Inventory	2.197	Service - Steel	43.94	1	31.84	50.0	As Requested	As Requested
	Operating	3.669	Service - Steel	73.38	1	31.84	50.0	As Requested	As Requested
HS 20-44	Inventory	1.550	Service - Steel	55.78	1	31.84	50.0	As Requested	As Requested
	Operating	2.588	Service - Steel	93.16	1	31.84	50.0	As Requested	As Requested

Note:
"N/A" indicates not applicable
"**" indicates not available

Individual Vehicle Load Factor Rating Summary

Live Load		Vehicle Type	Rating Factor	Controls	Capacity (Ton)	Location Span	(ft)	Percent	Impact	Lane
H 20-44	Inventory	Lane	2.197	Service - Steel	43.94	1	31.84	50.0	As Requested	As Requested
	Operating	Lane	3.669	Service - Steel	73.38	1	31.84	50.0	As Requested	As Requested
H 20-44	Inventory	Axle Load	2.311	Service - Steel	46.22	1	31.84	50.0	As Requested	As Requested
	Operating	Axle Load	3.859	Service - Steel	77.19	1	31.84	50.0	As Requested	As Requested

Note:
"N/A" indicates not applicable
"**" indicates not available

Reactions
Live Load H 20-44

Support	Stage 1 DL (kip)	Stage 2 DL (kip)	+(LL+I) (kip)	-(LL+I) (kip)	Reaction +IF (%)	Reaction -IF (%)
1	47.07	N/A	27.01(L)	0.00(L)	26.500	0.000
2	47.06	N/A	27.01(L)	0.00(L)	26.500	0.000

Note:
"N/A" indicates not applicable
"**" indicates not available

LL Codes:
(T) Truck load controls
(L) Lane load controls

Note:
Impact and distribution factors included in above live load reactions.

Moments
Live Load H 20-44

Span 1

Location (ft)	Percent	Stage 1 DL (kip-ft)	Stage 2 DL (kip-ft)	+(LL+I) (kip-ft)	-(LL+I) (kip-ft)	+Impact Factor (%)	-Impact Factor (%)
0.00	0.0	0.00	N/A	-0.00(L)	-0.00(L)	**	**
6.37	10.0	269.11	N/A	177.59(L)	0.00(L)	**	**
12.74	20.0	478.66	N/A	315.71(L)	0.00(L)	**	**
19.10	30.0	628.63	N/A	414.37(L)	0.00(L)	**	**
19.84	31.2	642.22	N/A	423.28(L)	0.00(L)	**	**
25.47	40.0	718.14	N/A	473.56(L)	0.00(L)	**	**
31.84	50.0	747.96	N/A	493.29(L)	0.00(L)	**	**
38.21	60.0	718.21	N/A	473.56(L)	0.00(L)	**	**
41.76	65.6	675.69	N/A	445.38(L)	0.00(L)	**	**
44.57	70.0	628.44	N/A	414.37(L)	0.00(L)	**	**
50.94	80.0	478.53	N/A	315.71(L)	0.00(L)	**	**
57.31	90.0	269.05	N/A	177.59(L)	0.00(L)	**	**
63.68	100.0	-0.00	N/A	0.00(L)	0.00(L)	**	**

Note:
"N/A" indicates not applicable
"**" indicates not available

LL Codes:
(T) Truck load controls
(L) Lane load controls

Note:
Impact and distribution factors included in above live load moments.

Shears
Live Load H 20-44

Span 1

Location (ft)	Percent	Stage 1 DL (kip)	Stage 2 DL (kip)	+(LL+I) (kip)	-(LL+I) (kip)	+Impact Factor (%)	-Impact Factor (%)
0.00	0.0	46.94	N/A	31.60(L)	-0.00(L)	**	**
6.37	10.0	37.58	N/A	32.46(L)	-2.60(T)	**	**
12.74	20.0	28.23	N/A	27.74(L)	-5.25(T)	**	**
19.10	30.0	18.88	N/A	23.29(L)	-8.46(T)	**	**
19.84	31.2	17.79	N/A	22.80(L)	-8.86(T)	**	**
25.47	40.0	9.36	N/A	19.03(L)	-11.82(T)	**	**
31.84	50.0	0.01	N/A	15.14(T)	-15.14(T)	**	**
38.21	60.0	-9.35	N/A	11.82(T)	-19.03(L)	**	**
41.76	65.6	-14.57	N/A	9.96(T)	-21.42(L)	**	**
44.57	70.0	-18.86	N/A	8.46(T)	-23.29(L)	**	**
50.94	80.0	-28.22	N/A	5.25(T)	-27.74(L)	**	**
57.31	90.0	-37.57	N/A	2.60(T)	-32.46(L)	**	**
63.68	100.0	-46.93	N/A	-0.00(L)	-31.60(L)	**	**

Note:
"N/A" indicates not applicable
"**" indicates not available

LL Codes:
(T) Truck load controls
(L) Lane load controls

Note:
Impact and distribution factors included in above live load shears.

Individual Vehicle Load Factor Rating Summary

Live Load		Vehicle Type	Rating Factor	Controls	Capacity (Ton)	Location Span	(ft)	Percent	Impact	Lane
HS 20-44	Inventory	Lane	2.197	Service - Steel	79.09	1	31.84	50.0	As Requested	As Requested
	Operating	Lane	3.669	Service - Steel	132.08	1	31.84	50.0	As Requested	As Requested
HS 20-44	Inventory	Axle Load	1.550	Service - Steel	55.78	1	31.84	50.0	As Requested	As Requested
	Operating	Axle Load	2.588	Service - Steel	93.16	1	31.84	50.0	As Requested	As Requested

Note:
"N/A" indicates not applicable
"**" indicates not available

Reactions
Live Load HS 20-44

Support	Stage 1 DL (kip)	Stage 2 DL (kip)	+(LL+I) (kip)	-(LL+I) (kip)	Reaction +IF (%)	Reaction -IF (%)
1	47.07	N/A	35.79(T)	0.00(L)	26.500	0.000
2	47.06	N/A	35.79(T)	0.00(L)	26.500	0.000

Note:
"N/A" indicates not applicable
"**" indicates not available

LL Codes:
(T) Truck load controls
(L) Lane load controls

Note:
Impact and distribution factors included in above live load reactions.

Moments
Live Load HS 20-44

Span 1

Location (ft)	Percent	Stage 1 DL (kip-ft)	Stage 2 DL (kip-ft)	+(LL+I) (kip-ft)	-(LL+I) (kip-ft)	+Impact Factor (%)	-Impact Factor (%)
0.00	0.0	0.00	N/A	-0.00(L)	-0.00(L)	**	**
6.37	10.0	269.11	N/A	278.91(T)	0.00(L)	**	**
12.74	20.0	478.66	N/A	483.79(T)	0.00(L)	**	**
19.10	30.0	628.63	N/A	614.63(T)	0.00(L)	**	**
19.84	31.2	642.22	N/A	625.04(T)	0.00(L)	**	**
25.47	40.0	718.14	N/A	689.51(T)	0.00(L)	**	**
31.84	50.0	747.96	N/A	699.40(T)	0.00(L)	**	**
38.21	60.0	718.21	N/A	689.51(T)	0.00(L)	**	**
41.76	65.6	675.69	N/A	651.79(T)	0.00(L)	**	**
44.57	70.0	628.44	N/A	614.63(T)	0.00(L)	**	**
50.94	80.0	478.53	N/A	483.79(T)	0.00(L)	**	**
57.31	90.0	269.05	N/A	278.91(T)	0.00(L)	**	**
63.68	100.0	-0.00	N/A	0.00(L)	0.00(L)	**	**

Note:
"N/A" indicates not applicable
"**" indicates not available

LL Codes:
(T) Truck load controls
(L) Lane load controls

Note:
Impact and distribution factors included in above live load moments.

Shears
Live Load HS 20-44

Span 1

Location (ft)	Percent	Stage 1 DL (kip)	Stage 2 DL (kip)	+(LL+I) (kip)	-(LL+I) (kip)	+Impact Factor (%)	-Impact Factor (%)
0.00	0.0	46.94	N/A	49.16(T)	-0.00(L)	**	**
6.37	10.0	37.58	N/A	44.12(T)	-2.60(T)	**	**
12.74	20.0	28.23	N/A	38.56(T)	-5.25(T)	**	**
19.10	30.0	18.88	N/A	32.93(T)	-10.05(T)	**	**
19.84	31.2	17.79	N/A	32.27(T)	-10.68(T)	**	**
25.47	40.0	9.36	N/A	27.09(T)	-15.40(T)	**	**
31.84	50.0	0.01	N/A	21.12(T)	-21.12(T)	**	**
38.21	60.0	-9.35	N/A	15.40(T)	-27.09(T)	**	**
41.76	65.6	-14.57	N/A	12.44(T)	-30.42(T)	**	**
44.57	70.0	-18.86	N/A	10.05(T)	-32.93(T)	**	**
50.94	80.0	-28.22	N/A	5.25(T)	-38.56(T)	**	**
57.31	90.0	-37.57	N/A	2.60(T)	-44.12(T)	**	**
63.68	100.0	-46.93	N/A	-0.00(L)	-49.16(T)	**	**

Note:
"N/A" indicates not applicable
"**" indicates not available

LL Codes:
(T) Truck load controls
(L) Lane load controls

Note:
Impact and distribution factors included in above live load shears.

Cross Section Properties topic is not available for the specified analysis engine!

Report by Action: ☑ **Flexure** ☑ **Shear** ☑ **Overload** ☑ **Critical**

Detailed Rating Results
H 20-44
Axle Load
Impact: As Requested
Lane: As Requested

Span 1

Location (ft)	Percent	Limit State	Units	Capacity	DL	LL	Inventory Rating Factor	Inventory Load Rating (Ton)	Operating Rating Factor	Operating Load Rating (Ton)
0.00	0.0	Flexure	KIP-FT	4041.06	0.00	0.00	99.000	1980.00	99.000	1980.00
0.00	**0.0**	**Shear**	**KIPS**	**370.61**	**46.94**	**26.36**	**5.409**	**108.18**	**9.033**	**180.66**
0.00	0.0	Overload	KSI	-33.00	-0.00	-0.00	99.000	1980.00	99.000	1980.00
6.37	10.0	Flexure	KIP-FT	4041.06	269.11	176.05	9.657	193.15	16.128	322.56
6.37	**10.0**	**Shear**	**KIPS**	**370.61**	**37.58**	**27.85**	**5.321**	**106.43**	**8.887**	**177.73**
6.37	10.0	Overload	KSI	33.00	4.44	1.85	8.711	174.21	14.547	290.94
12.74	20.0	Flexure	KIP-FT	4041.06	478.66	310.98	5.064	101.28	8.457	169.14
12.74	20.0	Shear	KIPS	370.61	28.23	24.79	6.205	124.09	10.362	207.23
12.74	**20.0**	**Overload**	**KSI**	**33.00**	**7.89**	**3.27**	**4.298**	**85.97**	**7.178**	**143.57**
19.10	30.0	Flexure	KIP-FT	4041.06	628.63	404.76	3.669	73.37	6.127	122.53
19.10	30.0	Shear	KIPS	370.61	18.88	21.69	7.350	147.00	12.274	245.48
19.10	**30.0**	**Overload**	**KSI**	**33.00**	**10.36**	**4.25**	**2.954**	**59.09**	**4.934**	**98.68**
25.47	40.0	Flexure	KIP-FT	4041.06	718.14	457.42	3.129	62.58	5.226	104.52
25.47	40.0	Shear	KIPS	370.61	9.36	18.46	8.946	178.92	14.940	298.80
25.47	**40.0**	**Overload**	**KSI**	**33.00**	**11.84**	**4.81**	**2.431**	**48.61**	**4.059**	**81.18**
31.84	50.0	Flexure	KIP-FT	4041.06	747.96	468.94	3.014	60.28	5.034	100.68
31.84	50.0	Shear	KIPS	370.61	0.01	15.14	11.278	225.56	18.834	376.68
31.84	**50.0**	**Overload**	**KSI**	**33.00**	**12.33**	**4.93**	**2.311**	**46.22**	**3.859**	**77.19**
38.21	60.0	Flexure	KIP-FT	4041.06	718.21	457.42	3.129	62.58	5.226	104.51
38.21	60.0	Shear	KIPS	370.61	9.36	18.46	8.946	178.92	14.940	298.80
38.21	**60.0**	**Overload**	**KSI**	**33.00**	**11.84**	**4.81**	**2.430**	**48.61**	**4.059**	**81.17**
44.57	70.0	Flexure	KIP-FT	4041.06	628.44	404.76	3.669	73.38	6.127	122.54
44.57	70.0	Shear	KIPS	370.61	18.86	21.69	7.350	147.00	12.275	245.49
44.57	**70.0**	**Overload**	**KSI**	**33.00**	**10.36**	**4.25**	**2.955**	**59.10**	**4.935**	**98.69**

50.94	80.0	Flexure	KIP-FT	4041.06	478.53	310.98	5.064	101.28	8.457	169.14
50.94	80.0	Shear	KIPS	370.61	28.22	24.79	6.205	124.10	10.362	207.24
50.94	**80.0**	**Overload**	**KSI**	**33.00**	**7.89**	**3.27**	**4.299**	**85.98**	**7.179**	**143.58**
57.31	90.0	Flexure	KIP-FT	4041.06	269.05	176.05	9.658	193.15	16.128	322.57
57.31	**90.0**	**Shear**	**KIPS**	**370.61**	**37.57**	**27.85**	**5.322**	**106.43**	**8.887**	**177.74**
57.31	90.0	Overload	KSI	33.00	4.44	1.85	8.711	174.22	14.548	290.95
63.68	100.0	Flexure	KIP-FT	4041.06	0.00	0.00	99.000	1980.00	99.000	1980.00
63.68	**100.0**	**Shear**	**KIPS**	**370.61**	**46.93**	**26.36**	**5.409**	**108.18**	**9.033**	**180.67**
63.68	100.0	Overload	KSI	-33.00	-0.00	-0.00	99.000	1980.00	99.000	1980.00

Detailed Rating Results
H 20-44
Lane
Impact: As Requested
Lane: As Requested

Span 1

Location							Inventory Rating	Inventory Load Rating	Operating Rating	Operating Load Rating
(ft)	**Percent**	**Limit State**	**Units**	**Capacity**	**DL**	**LL**	**Factor**	**(Ton)**	**Factor**	**(Ton)**
0.00	0.0	Flexure	KIP-FT	4041.06	0.00	0.00	99.000	1980.00	99.000	1980.00
0.00	**0.0**	**Shear**	**KIPS**	**370.61**	**46.94**	**31.60**	**4.513**	**90.27**	**7.537**	**150.74**
0.00	0.0	Overload	KSI	-33.00	-0.00	-0.00	99.000	1980.00	99.000	1980.00
6.37	10.0	Flexure	KIP-FT	4041.06	269.11	177.59	9.574	191.48	15.989	319.78
6.37	**10.0**	**Shear**	**KIPS**	**370.61**	**37.58**	**32.46**	**4.566**	**91.32**	**7.625**	**152.51**
6.37	10.0	Overload	KSI	33.00	4.44	1.87	8.636	172.71	14.421	288.43
12.74	20.0	Flexure	KIP-FT	4041.06	478.66	315.71	4.988	99.76	8.330	166.60
12.74	20.0	Shear	KIPS	370.61	28.23	27.74	5.545	110.89	9.259	185.19
12.74	**20.0**	**Overload**	**KSI**	**33.00**	**7.89**	**3.32**	**4.234**	**84.68**	**7.071**	**141.42**
19.10	30.0	Flexure	KIP-FT	4041.06	628.63	414.37	3.584	71.67	5.985	119.69
19.10	30.0	Shear	KIPS	370.61	18.88	23.29	6.843	136.86	11.428	228.56
19.10	**30.0**	**Overload**	**KSI**	**33.00**	**10.36**	**4.35**	**2.886**	**57.72**	**4.820**	**96.39**
25.47	40.0	Flexure	KIP-FT	4041.06	718.14	473.56	3.023	60.45	5.048	100.95
25.47	40.0	Shear	KIPS	370.61	9.36	19.03	8.675	173.50	14.488	289.75
25.47	**40.0**	**Overload**	**KSI**	**33.00**	**11.84**	**4.98**	**2.348**	**46.95**	**3.921**	**78.41**
31.84	50.0	Flexure	KIP-FT	4041.06	747.96	493.29	2.865	57.31	4.785	95.71

31.84	50.0	Shear	KIPS	370.61	0.01	15.01	11.369	227.39	18.987	379.74
31.84	**50.0**	**Overload**	**KSI**	**33.00**	**12.33**	**5.18**	**2.197**	**43.94**	**3.669**	**73.38**
38.21	60.0	Flexure	KIP-FT	4041.06	718.21	473.56	3.022	60.45	5.048	100.95
38.21	60.0	Shear	KIPS	370.61	9.36	19.03	8.675	173.50	14.488	289.75
38.21	**60.0**	**Overload**	**KSI**	**33.00**	**11.84**	**4.98**	**2.348**	**46.95**	**3.920**	**78.41**
44.57	70.0	Flexure	KIP-FT	4041.06	628.44	414.37	3.584	71.68	5.985	119.70
44.57	70.0	Shear	KIPS	370.61	18.86	23.29	6.843	136.87	11.428	228.56
44.57	**70.0**	**Overload**	**KSI**	**33.00**	**10.36**	**4.35**	**2.886**	**57.73**	**4.820**	**96.41**
50.94	80.0	Flexure	KIP-FT	4041.06	478.53	315.71	4.988	99.77	8.330	166.61
50.94	80.0	Shear	KIPS	370.61	28.22	27.74	5.545	110.90	9.260	185.20
50.94	**80.0**	**Overload**	**KSI**	**33.00**	**7.89**	**3.32**	**4.234**	**84.69**	**7.072**	**141.43**
57.31	90.0	Flexure	KIP-FT	4041.06	269.05	177.59	9.574	191.49	15.989	319.79
57.31	**90.0**	**Shear**	**KIPS**	**370.61**	**37.57**	**32.46**	**4.566**	**91.33**	**7.626**	**152.51**
57.31	90.0	Overload	KSI	33.00	4.44	1.87	8.636	172.72	14.422	288.44
63.68	100.0	Flexure	KIP-FT	4041.06	0.00	0.00	99.000	1980.00	99.000	1980.00
63.68	**100.0**	**Shear**	**KIPS**	**370.61**	**46.93**	**31.60**	**4.514**	**90.27**	**7.538**	**150.75**
63.68	100.0	Overload	KSI	-33.00	-0.00	-0.00	99.000	1980.00	99.000	1980.00

Detailed Rating Results
HS 20-44
Axle Load
Impact: As Requested
Lane: As Requested

Span 1

Location							Inventory Rating	Inventory Load Rating	Operating Rating	Operating Load Rating
(ft)	**Percent**	**Limit State**	**Units**	**Capacity**	**DL**	**LL**	**Factor**	**(Ton)**	**Factor**	**(Ton)**
0.00	0.0	Flexure	KIP-FT	4041.06	0.00	0.00	99.000	3564.00	99.000	3564.00
0.00	**0.0**	**Shear**	**KIPS**	**370.61**	**46.94**	**49.16**	**2.901**	**104.43**	**4.844**	**174.40**
0.00	0.0	Overload	KSI	-33.00	-0.00	-0.00	99.000	3564.00	99.000	3564.00
6.37	10.0	Flexure	KIP-FT	4041.06	269.11	278.91	6.096	219.45	10.180	366.49
6.37	**10.0**	**Shear**	**KIPS**	**370.61**	**37.58**	**44.12**	**3.359**	**120.92**	**5.609**	**201.94**
6.37	10.0	Overload	KSI	33.00	4.44	2.93	5.498	197.94	9.182	330.56
12.74	20.0	Flexure	KIP-FT	4041.06	478.66	483.79	3.255	117.18	5.436	195.69
12.74	20.0	Shear	KIPS	370.61	28.23	38.56	3.988	143.58	6.660	239.78
12.74	**20.0**	**Overload**	**KSI**	**33.00**	**7.89**	**5.08**	**2.763**	**99.47**	**4.614**	**166.11**

19.10	30.0	Flexure	KIP-FT	4041.06	628.63	614.63	2.416	86.98	4.035	145.25
19.10	30.0	Shear	KIPS	370.61	18.88	32.93	4.840	174.25	8.083	290.99
19.10	**30.0**	**Overload**	**KSI**	**33.00**	**10.36**	**6.46**	**1.946**	**70.04**	**3.249**	**116.97**
25.47	40.0	Flexure	KIP-FT	4041.06	718.14	689.51	2.076	74.73	3.467	124.80
25.47	40.0	Shear	KIPS	370.61	9.36	27.09	6.095	219.41	10.178	366.41
25.47	**40.0**	**Overload**	**KSI**	**33.00**	**11.84**	**7.25**	**1.612**	**58.05**	**2.693**	**96.94**
31.84	50.0	Flexure	KIP-FT	4041.06	747.96	699.40	2.021	72.76	3.375	121.50
31.84	50.0	Shear	KIPS	370.61	0.01	21.12	8.084	291.04	13.501	486.03
31.84	**50.0**	**Overload**	**KSI**	**33.00**	**12.33**	**7.35**	**1.550**	**55.78**	**2.588**	**93.16**
38.21	60.0	Flexure	KIP-FT	4041.06	718.21	689.51	2.076	74.73	3.467	124.80
38.21	60.0	Shear	KIPS	370.61	9.36	27.09	6.095	219.41	10.178	366.41
38.21	**60.0**	**Overload**	**KSI**	**33.00**	**11.84**	**7.25**	**1.612**	**58.04**	**2.693**	**96.93**
44.57	70.0	Flexure	KIP-FT	4041.06	628.44	614.63	2.416	86.98	4.035	145.26
44.57	70.0	Shear	KIPS	370.61	18.86	32.93	4.840	174.25	8.083	291.00
44.57	**70.0**	**Overload**	**KSI**	**33.00**	**10.36**	**6.46**	**1.946**	**70.05**	**3.250**	**116.99**
50.94	80.0	Flexure	KIP-FT	4041.06	478.53	483.79	3.255	117.19	5.436	195.70
50.94	80.0	Shear	KIPS	370.61	28.22	38.56	3.988	143.58	6.661	239.78
50.94	**80.0**	**Overload**	**KSI**	**33.00**	**7.89**	**5.08**	**2.763**	**99.48**	**4.615**	**166.13**
57.31	90.0	Flexure	KIP-FT	4041.06	269.05	278.91	6.096	219.46	10.180	366.49
57.31	**90.0**	**Shear**	**KIPS**	**370.61**	**37.57**	**44.12**	**3.359**	**120.93**	**5.610**	**201.95**
57.31	90.0	Overload	KSI	33.00	4.44	2.93	5.499	197.95	9.183	330.57
63.68	100.0	Flexure	KIP-FT	4041.06	0.00	0.00	99.000	3564.00	99.000	3564.00
63.68	**100.0**	**Shear**	**KIPS**	**370.61**	**46.93**	**49.16**	**2.901**	**104.43**	**4.845**	**174.40**
63.68	100.0	Overload	KSI	-33.00	-0.00	-0.00	99.000	3564.00	99.000	3564.00

Detailed Rating Results
HS 20-44
Lane
Impact: As Requested
Lane: As Requested

Span 1

Location							Inventory Rating	Inventory Load Rating	Operating Rating	Operating Load Rating
(ft)	**Percent**	**Limit State**	**Units**	**Capacity**	**DL**	**LL**	**Factor**	**(Ton)**	**Factor**	**(Ton)**
0.00	0.0	Flexure	KIP-FT	4041.06	0.00	0.00	99.000	3564.00	99.000	3564.00

0.00	**0.0**	**Shear**	**KIPS**	**370.61**	**46.94**	**31.60**	**4.513**	**162.48**	**7.537**	**271.34**
0.00	0.0	Overload	KSI	-33.00	-0.00	-0.00	99.000	3564.00	99.000	3564.00
6.37	10.0	Flexure	KIP-FT	4041.06	269.11	177.59	9.574	344.67	15.989	575.60
6.37	**10.0**	**Shear**	**KIPS**	**370.61**	**37.58**	**32.46**	**4.566**	**164.38**	**7.625**	**274.51**
6.37	10.0	Overload	KSI	33.00	4.44	1.87	8.636	310.88	14.421	519.17
12.74	20.0	Flexure	KIP-FT	4041.06	478.66	315.71	4.988	179.57	8.330	299.88
12.74	20.0	Shear	KIPS	370.61	28.23	27.74	5.545	199.61	9.259	333.34
12.74	**20.0**	**Overload**	**KSI**	**33.00**	**7.89**	**3.32**	**4.234**	**152.43**	**7.071**	**254.55**
19.10	30.0	Flexure	KIP-FT	4041.06	628.63	414.37	3.584	129.01	5.985	215.45
19.10	30.0	Shear	KIPS	370.61	18.88	23.29	6.843	246.35	11.428	411.40
19.10	**30.0**	**Overload**	**KSI**	**33.00**	**10.36**	**4.35**	**2.886**	**103.89**	**4.820**	**173.50**
25.47	40.0	Flexure	KIP-FT	4041.06	718.14	473.56	3.023	108.81	5.048	181.72
25.47	40.0	Shear	KIPS	370.61	9.36	19.03	8.675	312.31	14.488	521.55
25.47	**40.0**	**Overload**	**KSI**	**33.00**	**11.84**	**4.98**	**2.348**	**84.52**	**3.921**	**141.14**
31.84	50.0	Flexure	KIP-FT	4041.06	747.96	493.29	2.865	103.16	4.785	172.27
31.84	50.0	Shear	KIPS	370.61	0.01	15.01	11.369	409.30	18.987	683.53
31.84	**50.0**	**Overload**	**KSI**	**33.00**	**12.33**	**5.18**	**2.197**	**79.09**	**3.669**	**132.08**
38.21	60.0	Flexure	KIP-FT	4041.06	718.21	473.56	3.022	108.81	5.048	181.71
38.21	60.0	Shear	KIPS	370.61	9.36	19.03	8.675	312.31	14.488	521.55
38.21	**60.0**	**Overload**	**KSI**	**33.00**	**11.84**	**4.98**	**2.348**	**84.51**	**3.920**	**141.13**
44.57	70.0	Flexure	KIP-FT	4041.06	628.44	414.37	3.584	129.02	5.985	215.47
44.57	70.0	Shear	KIPS	370.61	18.86	23.29	6.843	246.36	11.428	411.42
44.57	**70.0**	**Overload**	**KSI**	**33.00**	**10.36**	**4.35**	**2.886**	**103.91**	**4.820**	**173.53**
50.94	80.0	Flexure	KIP-FT	4041.06	478.53	315.71	4.988	179.58	8.330	299.90
50.94	80.0	Shear	KIPS	370.61	28.22	27.74	5.545	199.61	9.260	333.36
50.94	**80.0**	**Overload**	**KSI**	**33.00**	**7.89**	**3.32**	**4.234**	**152.44**	**7.072**	**254.57**
57.31	90.0	Flexure	KIP-FT	4041.06	269.05	177.59	9.574	344.68	15.989	575.61
57.31	**90.0**	**Shear**	**KIPS**	**370.61**	**37.57**	**32.46**	**4.566**	**164.39**	**7.626**	**274.52**
57.31	90.0	Overload	KSI	33.00	4.44	1.87	8.636	310.89	14.422	519.19
63.68	100.0	Flexure	KIP-FT	4041.06	0.00	0.00	99.000	3564.00	99.000	3564.00
63.68	**100.0**	**Shear**	**KIPS**	**370.61**	**46.93**	**31.60**	**4.514**	**162.49**	**7.538**	**271.35**
63.68	100.0	Overload	KSI	-33.00	-0.00	-0.00	99.000	3564.00	99.000	3564.00

Bridge Name: 1031529
NBI Structure ID: 1031529
Bridge ID: 1031529

Analyzed By: BrR
Analyze Date: Tuesday, April 15, 2014 10:54:17
Analysis Engine: AASHTO LFR Engine Version 6.5.0.3001
Analysis Preference Setting: None

Report By: brr
Report Date: Tuesday, April 15, 2014 11:13:06

Structure Definition Name: Span 2 (SB)
Member Name: G2 (S8 plan designation)
Member Alternative Name: 5% Section Loss

Load Factor Rating Summary

Live Load		Rating Factor	Controls	Capacity (Ton)	Location Span	Location (ft)	Location Percent	Impact	Lane
H 20-44	Inventory	2.800	Service - Steel	56.01	1	31.84	50.0	As Requested	As Requested
	Operating	4.677	Service - Steel	93.53	1	31.84	50.0	As Requested	As Requested
HS 20-44	Inventory	1.975	Service - Steel	71.10	1	31.84	50.0	As Requested	As Requested
	Operating	3.298	Service - Steel	118.74	1	31.84	50.0	As Requested	As Requested

Note:
"N/A" indicates not applicable
"**" indicates not available

Individual Vehicle Load Factor Rating Summary

Live Load		Vehicle Type	Rating Factor	Controls	Capacity (Ton)	Location Span	(ft)	Percent	Impact	Lane
H 20-44	Inventory	Lane	2.800	Service - Steel	56.01	1	31.84	50.0	As Requested	As Requested
	Operating	Lane	4.677	Service - Steel	93.53	1	31.84	50.0	As Requested	As Requested
H 20-44	Inventory	Axle Load	2.946	Service - Steel	58.92	1	31.84	50.0	As Requested	As Requested
	Operating	Axle Load	4.919	Service - Steel	98.39	1	31.84	50.0	As Requested	As Requested

Note:
"N/A" indicates not applicable
"**" indicates not available

Reactions
Live Load H 20-44

Support	Stage 1 DL (kip)	Stage 2 DL (kip)	+(LL+I) (kip)	-(LL+I) (kip)	Reaction +IF (%)	Reaction -IF (%)
1	32.73	N/A	48.41(L)	0.00(L)	26.500	0.000
2	32.72	N/A	48.41(L)	0.00(L)	26.500	0.000

Note:
"N/A" indicates not applicable
"**" indicates not available

LL Codes:
(T) Truck load controls
(L) Lane load controls

Note:
Impact and distribution factors included in above live load reactions.

Moments
Live Load H 20-44

Span 1

Location (ft)	Percent	Stage 1 DL (kip-ft)	Stage 2 DL (kip-ft)	+(LL+I) (kip-ft)	-(LL+I) (kip-ft)	+Impact Factor (%)	-Impact Factor (%)
0.00	0.0	-0.00	N/A	-0.00(L)	-0.00(L)	**	**
6.37	10.0	186.82	N/A	187.65(L)	0.00(L)	**	**
8.34	13.1	236.60	N/A	237.28(L)	0.00(L)	**	**
12.74	20.0	333.55	N/A	333.61(L)	0.00(L)	**	**
19.10	30.0	439.01	N/A	437.86(L)	0.00(L)	**	**
19.84	31.2	448.59	N/A	447.28(L)	0.00(L)	**	**
20.95	32.9	461.71	N/A	460.33(L)	0.00(L)	**	**
25.47	40.0	501.48	N/A	500.41(L)	0.00(L)	**	**
31.84	50.0	522.19	N/A	521.26(L)	0.00(L)	**	**
38.21	60.0	501.55	N/A	500.41(L)	0.00(L)	**	**
41.76	65.6	472.03	N/A	470.64(L)	0.00(L)	**	**
42.87	67.3	460.01	N/A	458.69(L)	0.00(L)	**	**
44.57	70.0	438.82	N/A	437.86(L)	0.00(L)	**	**
50.94	80.0	333.43	N/A	333.61(L)	0.00(L)	**	**
55.34	86.9	236.52	N/A	237.28(L)	0.00(L)	**	**
57.31	90.0	186.76	N/A	187.65(L)	0.00(L)	**	**
63.68	100.0	0.00	N/A	0.00(L)	0.00(L)	**	**

Note:
"N/A" indicates not applicable
"**" indicates not available

LL Codes:
(T) Truck load controls
(L) Lane load controls

Note:
Impact and distribution factors included in above live load moments.

Shears
Live Load H 20-44

Span 1

Location (ft)	Percent	Stage 1 DL (kip)	Stage 2 DL (kip)	+(LL+I) (kip)	-(LL+I) (kip)	+Impact Factor (%)	-Impact Factor (%)
0.00	0.0	32.46	N/A	44.52(L)	-0.00(L)	**	**
6.37	10.0	26.22	N/A	34.30(L)	-2.75(T)	**	**
8.34	13.1	24.29	N/A	32.72(L)	-3.61(T)	**	**
12.74	20.0	19.81	N/A	29.31(L)	-5.54(T)	**	**
19.10	30.0	13.31	N/A	24.62(L)	-8.94(T)	**	**
19.84	31.2	12.56	N/A	24.09(L)	-9.36(T)	**	**
20.95	32.9	11.27	N/A	23.31(L)	-9.98(T)	**	**
25.47	40.0	6.50	N/A	20.11(L)	-12.49(T)	**	**
31.84	50.0	0.00	N/A	15.99(T)	-15.99(T)	**	**
38.21	60.0	-6.49	N/A	12.49(T)	-20.11(L)	**	**
41.76	65.6	-10.12	N/A	10.53(T)	-22.63(L)	**	**
42.87	67.3	-11.41	N/A	9.90(T)	-23.41(L)	**	**
44.57	70.0	-13.30	N/A	8.94(T)	-24.62(L)	**	**
50.94	80.0	-19.80	N/A	5.54(T)	-29.31(L)	**	**
55.34	86.9	-24.28	N/A	3.61(T)	-32.72(L)	**	**
57.31	90.0	-26.21	N/A	2.75(T)	-34.30(L)	**	**
63.68	100.0	-32.45	N/A	-0.00(L)	-44.52(L)	**	**

Note:
"N/A" indicates not applicable
"**" indicates not available

LL Codes:
(T) Truck load controls
(L) Lane load controls

Note:
Impact and distribution factors included in above live load shears.

Individual Vehicle Load Factor Rating Summary

Live Load		Vehicle Type	Rating Factor	Controls	Capacity (Ton)	Location Span	(ft)	Percent	Impact	Lane
HS 20-44	Inventory	Lane	2.800	Service - Steel	100.81	1	31.84	50.0	As Requested	As Requested
	Operating	Lane	4.677	Service - Steel	168.36	1	31.84	50.0	As Requested	As Requested
HS 20-44	Inventory	Axle Load	1.975	Service - Steel	71.10	1	31.84	50.0	As Requested	As Requested
	Operating	Axle Load	3.298	Service - Steel	118.74	1	31.84	50.0	As Requested	As Requested

Note:
"N/A" indicates not applicable
"**" indicates not available

Reactions
Live Load HS 20-44

Support	Stage 1 DL (kip)	Stage 2 DL (kip)	+(LL+I) (kip)	-(LL+I) (kip)	Reaction +IF (%)	Reaction -IF (%)
1	32.73	N/A	64.14(T)	0.00(L)	26.500	0.000
2	32.72	N/A	64.14(T)	0.00(L)	26.500	0.000

Note:
"N/A" indicates not applicable
"**" indicates not available

LL Codes:
(T) Truck load controls
(L) Lane load controls

Note:
Impact and distribution factors included in above live load reactions.

Moments
Live Load HS 20-44

Span 1

Location (ft)	Percent	Stage 1 DL (kip-ft)	Stage 2 DL (kip-ft)	+(LL+I) (kip-ft)	-(LL+I) (kip-ft)	+Impact Factor (%)	-Impact Factor (%)
0.00	0.0	-0.00	N/A	-0.00(L)	-0.00(L)	**	**
6.37	10.0	186.82	N/A	294.73(T)	0.00(L)	**	**
8.34	13.1	236.60	N/A	370.09(T)	0.00(L)	**	**
12.74	20.0	333.55	N/A	511.22(T)	0.00(L)	**	**
19.10	30.0	439.01	N/A	649.48(T)	0.00(L)	**	**
19.84	31.2	448.59	N/A	660.48(T)	0.00(L)	**	**
20.95	32.9	461.71	N/A	674.98(T)	0.00(L)	**	**
25.47	40.0	501.48	N/A	728.61(T)	0.00(L)	**	**
31.84	50.0	522.19	N/A	739.06(T)	0.00(L)	**	**
38.21	60.0	501.55	N/A	728.61(T)	0.00(L)	**	**
41.76	65.6	472.03	N/A	688.75(T)	0.00(L)	**	**
42.87	67.3	460.01	N/A	673.20(T)	0.00(L)	**	**
44.57	70.0	438.82	N/A	649.48(T)	0.00(L)	**	**
50.94	80.0	333.43	N/A	511.22(T)	0.00(L)	**	**
55.34	86.9	236.52	N/A	370.09(T)	0.00(L)	**	**
57.31	90.0	186.76	N/A	294.73(T)	0.00(L)	**	**
63.68	100.0	0.00	N/A	0.00(L)	0.00(L)	**	**

Note:
"N/A" indicates not applicable
"**" indicates not available

LL Codes:
(T) Truck load controls
(L) Lane load controls

Note:
Impact and distribution factors included in above live load moments.

Shears
Live Load HS 20-44

Span 1

Location (ft)	Percent	Stage 1 DL (kip)	Stage 2 DL (kip)	+(LL+I) (kip)	-(LL+I) (kip)	+Impact Factor (%)	-Impact Factor (%)
0.00	0.0	32.46	N/A	58.53(T)	-0.00(L)	**	**
6.37	10.0	26.22	N/A	46.62(T)	-2.75(T)	**	**
8.34	13.1	24.29	N/A	44.81(T)	-3.61(T)	**	**
12.74	20.0	19.81	N/A	40.75(T)	-5.54(T)	**	**
19.10	30.0	13.31	N/A	34.80(T)	-10.62(T)	**	**
19.84	31.2	12.56	N/A	34.10(T)	-11.29(T)	**	**
20.95	32.9	11.27	N/A	33.06(T)	-12.28(T)	**	**
25.47	40.0	6.50	N/A	28.63(T)	-16.28(T)	**	**
31.84	50.0	0.00	N/A	22.31(T)	-22.31(T)	**	**
38.21	60.0	-6.49	N/A	16.28(T)	-28.63(T)	**	**
41.76	65.6	-10.12	N/A	13.14(T)	-32.15(T)	**	**
42.87	67.3	-11.41	N/A	12.15(T)	-33.19(T)	**	**
44.57	70.0	-13.30	N/A	10.62(T)	-34.80(T)	**	**
50.94	80.0	-19.80	N/A	5.54(T)	-40.75(T)	**	**
55.34	86.9	-24.28	N/A	3.61(T)	-44.81(T)	**	**
57.31	90.0	-26.21	N/A	2.75(T)	-46.62(T)	**	**
63.68	100.0	-32.45	N/A	-0.00(L)	-58.53(T)	**	**

Note:
"N/A" indicates not applicable
"**" indicates not available

LL Codes:
(T) Truck load controls
(L) Lane load controls

Note:
Impact and distribution factors included in above live load shears.

Cross Section Properties topic is not available for the specified analysis engine!

Report by Action: ☑ **Flexure** ☑ **Shear** ☑ **Overload** ☑ **Critical**

Detailed Rating Results
H 20-44
Axle Load
Impact: As Requested
Lane: As Requested

Span 1

Location (ft)	Percent	Limit State	Units	Capacity	DL	LL	Inventory Rating Factor	Inventory Load Rating (Ton)	Operating Rating Factor	Operating Load Rating (Ton)
0.00	0.0	Flexure	KIP-FT	3069.94	0.00	0.00	99.000	1980.00	99.000	1980.00
0.00	**0.0**	**Shear**	**KIPS**	**386.05**	**32.46**	**38.73**	**4.090**	**81.80**	**6.830**	**136.60**
0.00	0.0	Overload	KSI	-33.00	-0.00	-0.00	99.000	1980.00	99.000	1980.00
6.37	10.0	Flexure	KIP-FT	3069.94	186.82	186.04	7.000	139.99	11.689	233.79
6.37	**10.0**	**Shear**	**KIPS**	**386.05**	**26.22**	**29.43**	**5.509**	**110.17**	**9.200**	**183.99**
6.37	10.0	Overload	KSI	33.00	4.75	2.89	5.510	110.21	9.202	184.05
8.34	13.1	Flexure	KIP-FT	3069.94	236.60	234.81	5.419	108.38	9.050	180.99
8.34	13.1	Shear	KIPS	386.05	24.29	28.43	5.743	114.85	9.590	191.80
8.34	**13.1**	**Overload**	**KSI**	**33.00**	**6.01**	**3.65**	**4.158**	**83.16**	**6.944**	**138.88**
12.74	20.0	Flexure	KIP-FT	4455.15	333.55	328.61	5.637	112.74	9.414	188.28
12.74	20.0	Shear	KIPS	386.05	19.81	26.19	6.336	126.72	10.581	211.61
12.74	**20.0**	**Overload**	**KSI**	**33.00**	**5.04**	**3.16**	**4.982**	**99.64**	**8.320**	**166.40**
19.10	30.0	Flexure	KIP-FT	4455.15	439.01	427.71	4.183	83.67	6.986	139.72
19.10	30.0	Shear	KIPS	386.05	13.31	22.92	7.411	148.22	12.376	247.53
19.10	**30.0**	**Overload**	**KSI**	**33.00**	**6.64**	**4.12**	**3.596**	**71.92**	**6.005**	**120.10**
25.47	40.0	Flexure	KIP-FT	4455.15	501.48	483.36	3.624	72.49	6.053	121.05
25.47	40.0	Shear	KIPS	386.05	6.50	19.50	8.919	178.37	14.894	297.88
25.47	**40.0**	**Overload**	**KSI**	**33.00**	**7.58**	**4.65**	**3.060**	**61.21**	**5.111**	**102.21**
31.84	50.0	Flexure	KIP-FT	4455.15	522.19	495.53	3.510	70.20	5.862	117.24
31.84	50.0	Shear	KIPS	386.05	0.00	15.99	11.117	222.35	18.566	371.32
31.84	**50.0**	**Overload**	**KSI**	**33.00**	**7.89**	**4.77**	**2.946**	**58.92**	**4.919**	**98.39**
38.21	60.0	Flexure	KIP-FT	4455.15	501.55	483.36	3.624	72.48	6.052	121.05
38.21	60.0	Shear	KIPS	386.05	6.50	19.50	8.919	178.37	14.894	297.88
38.21	**60.0**	**Overload**	**KSI**	**33.00**	**7.58**	**4.65**	**3.060**	**61.20**	**5.110**	**102.21**

44.57	70.0	Flexure	KIP-FT	4455.15	438.82	427.71	4.184	83.67	6.986	139.73
44.57	70.0	Shear	KIPS	386.05	13.30	22.92	7.411	148.23	12.377	247.54
44.57	**70.0**	**Overload**	**KSI**	**33.00**	**6.63**	**4.12**	**3.596**	**71.92**	**6.006**	**120.11**
50.94	80.0	Flexure	KIP-FT	4455.15	333.43	328.61	5.637	112.75	9.414	188.29
50.94	80.0	Shear	KIPS	386.05	19.80	26.19	6.336	126.72	10.581	211.62
50.94	**80.0**	**Overload**	**KSI**	**33.00**	**5.04**	**3.16**	**4.982**	**99.65**	**8.321**	**166.41**
55.34	86.9	Flexure	KIP-FT	3069.94	236.52	234.81	5.419	108.38	9.050	181.00
55.34	86.9	Shear	KIPS	386.05	24.28	28.43	5.743	114.86	9.590	191.81
55.34	**86.9**	**Overload**	**KSI**	**33.00**	**6.01**	**3.65**	**4.158**	**83.17**	**6.945**	**138.89**
57.31	90.0	Flexure	KIP-FT	3069.94	186.76	186.04	7.000	140.00	11.690	233.80
57.31	**90.0**	**Shear**	**KIPS**	**386.05**	**26.21**	**29.43**	**5.509**	**110.18**	**9.200**	**184.00**
57.31	90.0	Overload	KSI	33.00	4.75	2.89	5.511	110.21	9.203	184.06
63.68	100.0	Flexure	KIP-FT	3069.94	0.00	0.00	99.000	1980.00	99.000	1980.00
63.68	**100.0**	**Shear**	**KIPS**	**386.05**	**32.45**	**38.73**	**4.090**	**81.80**	**6.830**	**136.61**
63.68	100.0	Overload	KSI	-33.00	-0.00	-0.00	99.000	1980.00	99.000	1980.00

Detailed Rating Results
H 20-44
Lane
Impact: As Requested
Lane: As Requested

Span 1

Location							Inventory Rating	Inventory Load Rating	Operating Rating	Operating Load Rating
(ft)	**Percent**	**Limit State**	**Units**	**Capacity**	**DL**	**LL**	**Factor**	**(Ton)**	**Factor**	**(Ton)**
0.00	0.0	Flexure	KIP-FT	3069.94	0.00	0.00	99.000	1980.00	99.000	1980.00
0.00	**0.0**	**Shear**	**KIPS**	**386.05**	**32.46**	**44.52**	**3.557**	**71.15**	**5.941**	**118.81**
0.00	0.0	Overload	KSI	-33.00	-0.00	-0.00	99.000	1980.00	99.000	1980.00
6.37	10.0	Flexure	KIP-FT	3069.94	186.82	187.65	6.939	138.79	11.589	231.77
6.37	**10.0**	**Shear**	**KIPS**	**386.05**	**26.22**	**34.30**	**4.727**	**94.54**	**7.894**	**157.88**
6.37	10.0	Overload	KSI	33.00	4.75	2.92	5.463	109.26	9.123	182.46
8.34	13.1	Flexure	KIP-FT	3069.94	236.60	237.28	5.362	107.25	8.955	179.10
8.34	13.1	Shear	KIPS	386.05	24.29	32.72	4.989	99.79	8.332	166.65
8.34	**13.1**	**Overload**	**KSI**	**33.00**	**6.01**	**3.69**	**4.115**	**82.30**	**6.872**	**137.43**
12.74	20.0	Flexure	KIP-FT	4455.15	333.55	333.61	5.553	111.05	9.273	185.46

12.74	20.0	Shear	KIPS	386.05	19.81	29.31	5.662	113.24	9.455	189.10
12.74	**20.0**	**Overload**	**KSI**	**33.00**	**5.04**	**3.21**	**4.907**	**98.15**	**8.195**	**163.91**
19.10	30.0	Flexure	KIP-FT	4455.15	439.01	437.86	4.086	81.73	6.824	136.48
19.10	30.0	Shear	KIPS	386.05	13.31	24.62	6.900	138.00	11.523	230.46
19.10	**30.0**	**Overload**	**KSI**	**33.00**	**6.64**	**4.21**	**3.512**	**70.25**	**5.866**	**117.32**
25.47	40.0	Flexure	KIP-FT	4455.15	501.48	500.41	3.501	70.02	5.846	116.93
25.47	40.0	Shear	KIPS	386.05	6.50	20.11	8.649	172.97	14.443	288.86
25.47	**40.0**	**Overload**	**KSI**	**33.00**	**7.58**	**4.82**	**2.956**	**59.12**	**4.936**	**98.73**
31.84	50.0	Flexure	KIP-FT	4455.15	522.19	521.26	3.337	66.74	5.573	111.45
31.84	50.0	Shear	KIPS	386.05	0.00	15.87	11.208	224.15	18.717	374.34
31.84	**50.0**	**Overload**	**KSI**	**33.00**	**7.89**	**5.02**	**2.800**	**56.01**	**4.677**	**93.53**
38.21	60.0	Flexure	KIP-FT	4455.15	501.55	500.41	3.501	70.01	5.846	116.92
38.21	60.0	Shear	KIPS	386.05	6.50	20.11	8.649	172.97	14.443	288.86
38.21	**60.0**	**Overload**	**KSI**	**33.00**	**7.58**	**4.82**	**2.956**	**59.12**	**4.936**	**98.73**
44.57	70.0	Flexure	KIP-FT	4455.15	438.82	437.86	4.087	81.73	6.825	136.49
44.57	70.0	Shear	KIPS	386.05	13.30	24.62	6.900	138.01	11.523	230.47
44.57	**70.0**	**Overload**	**KSI**	**33.00**	**6.63**	**4.21**	**3.513**	**70.26**	**5.866**	**117.33**
50.94	80.0	Flexure	KIP-FT	4455.15	333.43	333.61	5.553	111.06	9.273	185.46
50.94	80.0	Shear	KIPS	386.05	19.80	29.31	5.662	113.24	9.456	189.11
50.94	**80.0**	**Overload**	**KSI**	**33.00**	**5.04**	**3.21**	**4.908**	**98.16**	**8.196**	**163.92**
55.34	86.9	Flexure	KIP-FT	3069.94	236.52	237.28	5.363	107.25	8.955	179.11
55.34	86.9	Shear	KIPS	386.05	24.28	32.72	4.990	99.79	8.333	166.65
55.34	**86.9**	**Overload**	**KSI**	**33.00**	**6.01**	**3.69**	**4.115**	**82.30**	**6.872**	**137.44**
57.31	90.0	Flexure	KIP-FT	3069.94	186.76	187.65	6.940	138.79	11.589	231.78
57.31	**90.0**	**Shear**	**KIPS**	**386.05**	**26.21**	**34.30**	**4.727**	**94.54**	**7.894**	**157.88**
57.31	90.0	Overload	KSI	33.00	4.75	2.92	5.463	109.26	9.123	182.47
63.68	100.0	Flexure	KIP-FT	3069.94	0.00	0.00	99.000	1980.00	99.000	1980.00
63.68	**100.0**	**Shear**	**KIPS**	**386.05**	**32.45**	**44.52**	**3.557**	**71.15**	**5.941**	**118.82**
63.68	100.0	Overload	KSI	-33.00	-0.00	-0.00	99.000	1980.00	99.000	1980.00

Detailed Rating Results
HS 20-44
Axle Load
Impact: As Requested
Lane: As Requested

Span 1

Location							Inventory Rating	Inventory Load Rating	Operating Rating	Operating Load Rating
(ft)	Percent	Limit State	Units	Capacity	DL	LL	Factor	(Ton)	Factor	(Ton)
0.00	0.0	Flexure	KIP-FT	3069.94	0.00	0.00	99.000	3564.00	99.000	3564.00
0.00	**0.0**	**Shear**	**KIPS**	**386.05**	**32.46**	**58.53**	**2.706**	**97.43**	**4.519**	**162.70**
0.00	0.0	Overload	KSI	-33.00	-0.00	-0.00	99.000	3564.00	99.000	3564.00
6.37	10.0	Flexure	KIP-FT	3069.94	186.82	294.73	4.418	159.06	7.379	265.63
6.37	**10.0**	**Shear**	**KIPS**	**386.05**	**26.22**	**46.62**	**3.477**	**125.18**	**5.807**	**209.05**
6.37	10.0	Overload	KSI	33.00	4.75	4.58	3.478	125.21	5.809	209.11
8.34	13.1	Flexure	KIP-FT	3069.94	236.60	370.09	3.438	123.77	5.741	206.69
8.34	13.1	Shear	KIPS	386.05	24.29	44.81	3.643	131.16	6.084	219.04
8.34	**13.1**	**Overload**	**KSI**	**33.00**	**6.01**	**5.75**	**2.638**	**94.97**	**4.406**	**158.61**
12.74	20.0	Flexure	KIP-FT	4455.15	333.55	511.22	3.623	130.44	6.051	217.84
12.74	20.0	Shear	KIPS	386.05	19.81	40.75	4.073	146.61	6.801	244.84
12.74	**20.0**	**Overload**	**KSI**	**33.00**	**5.04**	**4.92**	**3.202**	**115.29**	**5.348**	**192.53**
19.10	30.0	Flexure	KIP-FT	4455.15	439.01	649.48	2.755	99.18	4.601	165.62
19.10	30.0	Shear	KIPS	386.05	13.31	34.80	4.881	175.70	8.151	293.42
19.10	**30.0**	**Overload**	**KSI**	**33.00**	**6.64**	**6.25**	**2.368**	**85.25**	**3.955**	**142.36**
25.47	40.0	Flexure	KIP-FT	4455.15	501.48	728.61	2.404	86.56	4.015	144.55
25.47	40.0	Shear	KIPS	386.05	6.50	28.63	6.076	218.73	10.147	365.28
25.47	**40.0**	**Overload**	**KSI**	**33.00**	**7.58**	**7.01**	**2.030**	**73.09**	**3.390**	**122.05**
31.84	50.0	Flexure	KIP-FT	4455.15	522.19	739.06	2.354	84.73	3.930	141.50
31.84	50.0	Shear	KIPS	386.05	0.00	22.31	7.969	286.90	13.309	479.12
31.84	**50.0**	**Overload**	**KSI**	**33.00**	**7.89**	**7.11**	**1.975**	**71.10**	**3.298**	**118.74**
38.21	60.0	Flexure	KIP-FT	4455.15	501.55	728.61	2.404	86.55	4.015	144.55
38.21	60.0	Shear	KIPS	386.05	6.50	28.63	6.076	218.73	10.147	365.28
38.21	**60.0**	**Overload**	**KSI**	**33.00**	**7.58**	**7.01**	**2.030**	**73.08**	**3.390**	**122.05**
44.57	70.0	Flexure	KIP-FT	4455.15	438.82	649.48	2.755	99.18	4.601	165.63
44.57	70.0	Shear	KIPS	386.05	13.30	34.80	4.881	175.71	8.151	293.43
44.57	**70.0**	**Overload**	**KSI**	**33.00**	**6.63**	**6.25**	**2.368**	**85.26**	**3.955**	**142.38**
50.94	80.0	Flexure	KIP-FT	4455.15	333.43	511.22	3.624	130.45	6.051	217.85
50.94	80.0	Shear	KIPS	386.05	19.80	40.75	4.073	146.62	6.801	244.85
50.94	**80.0**	**Overload**	**KSI**	**33.00**	**5.04**	**4.92**	**3.203**	**115.30**	**5.348**	**192.54**
55.34	86.9	Flexure	KIP-FT	3069.94	236.52	370.09	3.438	123.77	5.742	206.70

55.34	86.9	Shear	KIPS	386.05	24.28	44.81	3.644	131.17	6.085	219.05
55.34	**86.9**	**Overload**	**KSI**	**33.00**	**6.01**	**5.75**	**2.638**	**94.98**	**4.406**	**158.62**
57.31	90.0	Flexure	KIP-FT	3069.94	186.76	294.73	4.418	159.06	7.379	265.63
57.31	**90.0**	**Shear**	**KIPS**	**386.05**	**26.21**	**46.62**	**3.477**	**125.18**	**5.807**	**209.05**
57.31	90.0	Overload	KSI	33.00	4.75	4.58	3.478	125.22	5.809	209.12
63.68	100.0	Flexure	KIP-FT	3069.94	0.00	0.00	99.000	3564.00	99.000	3564.00
63.68	**100.0**	**Shear**	**KIPS**	**386.05**	**32.45**	**58.53**	**2.706**	**97.43**	**4.520**	**162.71**
63.68	100.0	Overload	KSI	-33.00	-0.00	-0.00	99.000	3564.00	99.000	3564.00

Detailed Rating Results
HS 20-44
Lane
Impact: As Requested
Lane: As Requested

Span 1

Location							Inventory Rating	Inventory Load Rating	Operating Rating	Operating Load Rating
(ft)	**Percent**	**Limit State**	**Units**	**Capacity**	**DL**	**LL**	**Factor**	**(Ton)**	**Factor**	**(Ton)**
0.00	0.0	Flexure	KIP-FT	3069.94	0.00	0.00	99.000	3564.00	99.000	3564.00
0.00	**0.0**	**Shear**	**KIPS**	**386.05**	**32.46**	**44.52**	**3.557**	**128.06**	**5.941**	**213.86**
0.00	0.0	Overload	KSI	-33.00	-0.00	-0.00	99.000	3564.00	99.000	3564.00
6.37	10.0	Flexure	KIP-FT	3069.94	186.82	187.65	6.939	249.82	11.589	417.19
6.37	**10.0**	**Shear**	**KIPS**	**386.05**	**26.22**	**34.30**	**4.727**	**170.17**	**7.894**	**284.18**
6.37	10.0	Overload	KSI	33.00	4.75	2.92	5.463	196.66	9.123	328.42
8.34	13.1	Flexure	KIP-FT	3069.94	236.60	237.28	5.362	193.04	8.955	322.38
8.34	13.1	Shear	KIPS	386.05	24.29	32.72	4.989	179.62	8.332	299.97
8.34	**13.1**	**Overload**	**KSI**	**33.00**	**6.01**	**3.69**	**4.115**	**148.13**	**6.872**	**247.38**
12.74	20.0	Flexure	KIP-FT	4455.15	333.55	333.61	5.553	199.89	9.273	333.82
12.74	20.0	Shear	KIPS	386.05	19.81	29.31	5.662	203.82	9.455	340.39
12.74	**20.0**	**Overload**	**KSI**	**33.00**	**5.04**	**3.21**	**4.907**	**176.67**	**8.195**	**295.03**
19.10	30.0	Flexure	KIP-FT	4455.15	439.01	437.86	4.086	147.11	6.824	245.67
19.10	30.0	Shear	KIPS	386.05	13.31	24.62	6.900	248.40	11.523	414.83
19.10	**30.0**	**Overload**	**KSI**	**33.00**	**6.64**	**4.21**	**3.512**	**126.45**	**5.866**	**211.17**
25.47	40.0	Flexure	KIP-FT	4455.15	501.48	500.41	3.501	126.03	5.846	210.47
25.47	40.0	Shear	KIPS	386.05	6.50	20.11	8.649	311.35	14.443	519.95
25.47	**40.0**	**Overload**	**KSI**	**33.00**	**7.58**	**4.82**	**2.956**	**106.41**	**4.936**	**177.71**

31.84	50.0	Flexure	KIP-FT	4455.15	522.19	521.26	3.337	120.13	5.573	200.62
31.84	50.0	Shear	KIPS	386.05	0.00	15.87	11.208	403.48	18.717	673.81
31.84	**50.0**	**Overload**	**KSI**	**33.00**	**7.89**	**5.02**	**2.800**	**100.81**	**4.677**	**168.36**
38.21	60.0	Flexure	KIP-FT	4455.15	501.55	500.41	3.501	126.02	5.846	210.46
38.21	60.0	Shear	KIPS	386.05	6.50	20.11	8.649	311.35	14.443	519.95
38.21	**60.0**	**Overload**	**KSI**	**33.00**	**7.58**	**4.82**	**2.956**	**106.41**	**4.936**	**177.71**
44.57	70.0	Flexure	KIP-FT	4455.15	438.82	437.86	4.087	147.12	6.825	245.68
44.57	70.0	Shear	KIPS	386.05	13.30	24.62	6.900	248.41	11.523	414.84
44.57	**70.0**	**Overload**	**KSI**	**33.00**	**6.63**	**4.21**	**3.513**	**126.46**	**5.866**	**211.19**
50.94	80.0	Flexure	KIP-FT	4455.15	333.43	333.61	5.553	199.90	9.273	333.83
50.94	80.0	Shear	KIPS	386.05	19.80	29.31	5.662	203.83	9.456	340.40
50.94	**80.0**	**Overload**	**KSI**	**33.00**	**5.04**	**3.21**	**4.908**	**176.68**	**8.196**	**295.05**
55.34	86.9	Flexure	KIP-FT	3069.94	236.52	237.28	5.363	193.05	8.955	322.39
55.34	86.9	Shear	KIPS	386.05	24.28	32.72	4.990	179.63	8.333	299.98
55.34	**86.9**	**Overload**	**KSI**	**33.00**	**6.01**	**3.69**	**4.115**	**148.14**	**6.872**	**247.40**
57.31	90.0	Flexure	KIP-FT	3069.94	186.76	187.65	6.940	249.82	11.589	417.20
57.31	**90.0**	**Shear**	**KIPS**	**386.05**	**26.21**	**34.30**	**4.727**	**170.17**	**7.894**	**284.19**
57.31	90.0	Overload	KSI	33.00	4.75	2.92	5.463	196.67	9.123	328.44
63.68	100.0	Flexure	KIP-FT	3069.94	0.00	0.00	99.000	3564.00	99.000	3564.00
63.68	**100.0**	**Shear**	**KIPS**	**386.05**	**32.45**	**44.52**	**3.557**	**128.07**	**5.941**	**213.87**
63.68	100.0	Overload	KSI	-33.00	-0.00	-0.00	99.000	3564.00	99.000	3564.00

Bridge Name: 1031529
NBI Structure ID: 1031529
Bridge ID: 1031529

Analyzed By: BrR
Analyze Date: Tuesday, April 15, 2014 10:54:17
Analysis Engine: AASHTO LFR Engine Version 6.5.0.3001
Analysis Preference Setting: None

Report By: brr
Report Date: Tuesday, April 15, 2014 11:13:06

Structure Definition Name: Span 2 (SB)
Member Name: G7 (S9 plan designation)
Member Alternative Name: 5% Section Loss

Load Factor Rating Summary

Live Load		Rating Factor	Controls	Capacity (Ton)	Location Span	Location (ft)	Location Percent	Impact	Lane
H 20-44	Inventory	2.702	Service - Steel	54.04	1	31.84	50.0	As Requested	As Requested
	Operating	4.512	Service - Steel	90.24	1	31.84	50.0	As Requested	As Requested
HS 20-44	Inventory	1.906	Service - Steel	68.60	1	31.84	50.0	As Requested	As Requested
	Operating	3.182	Service - Steel	114.56	1	31.84	50.0	As Requested	As Requested

Note:
"N/A" indicates not applicable
"**" indicates not available

Individual Vehicle Load Factor Rating Summary

Live Load		Vehicle Type	Rating Factor	Controls	Capacity (Ton)	Location Span	(ft)	Percent	Impact	Lane
H 20-44	Inventory	Lane	2.702	Service - Steel	54.04	1	31.84	50.0	As Requested	As Requested
	Operating	Lane	4.512	Service - Steel	90.24	1	31.84	50.0	As Requested	As Requested
H 20-44	Inventory	Axle Load	2.842	Service - Steel	56.84	1	31.84	50.0	As Requested	As Requested
	Operating	Axle Load	4.746	Service - Steel	94.93	1	31.84	50.0	As Requested	As Requested

Note:
"N/A" indicates not applicable
"**" indicates not available

Reactions
Live Load H 20-44

Support	Stage 1 DL (kip)	Stage 2 DL (kip)	+(LL+I) (kip)	-(LL+I) (kip)	Reaction +IF (%)	Reaction -IF (%)
1	47.64	N/A	27.01(L)	0.00(L)	26.500	0.000
2	47.64	N/A	27.01(L)	0.00(L)	26.500	0.000

Note:
"N/A" indicates not applicable
"**" indicates not available

LL Codes:
(T) Truck load controls
(L) Lane load controls

Note:
Impact and distribution factors included in above live load reactions.

Moments
Live Load H 20-44

Span 1

Location (ft)	Percent	Stage 1 DL (kip-ft)	Stage 2 DL (kip-ft)	+(LL+I) (kip-ft)	-(LL+I) (kip-ft)	+Impact Factor (%)	-Impact Factor (%)
0.00	0.0	0.00	N/A	-0.00(L)	-0.00(L)	**	**
6.37	10.0	273.09	N/A	177.59(L)	0.00(L)	**	**
7.84	12.3	327.81	N/A	212.99(L)	0.00(L)	**	**
12.74	20.0	486.77	N/A	315.71(L)	0.00(L)	**	**
19.10	30.0	639.72	N/A	414.37(L)	0.00(L)	**	**
20.95	32.9	672.77	N/A	435.63(L)	0.00(L)	**	**
25.47	40.0	731.18	N/A	473.56(L)	0.00(L)	**	**
31.84	50.0	761.57	N/A	493.29(L)	0.00(L)	**	**
38.21	60.0	731.18	N/A	473.56(L)	0.00(L)	**	**
42.87	67.3	670.36	N/A	434.07(L)	0.00(L)	**	**
44.57	70.0	639.74	N/A	414.37(L)	0.00(L)	**	**
50.94	80.0	486.78	N/A	315.71(L)	0.00(L)	**	**
55.84	87.7	327.81	N/A	212.99(L)	0.00(L)	**	**
57.31	90.0	273.10	N/A	177.59(L)	0.00(L)	**	**
63.68	100.0	0.00	N/A	0.00(L)	0.00(L)	**	**

Note:
"N/A" indicates not applicable
"**" indicates not available

LL Codes:
(T) Truck load controls
(L) Lane load controls

Note:
Impact and distribution factors included in above live load moments.

Shears
Live Load H 20-44

Span 1

Location (ft)	Percent	Stage 1 DL (kip)	Stage 2 DL (kip)	+(LL+I) (kip)	-(LL+I) (kip)	+Impact Factor (%)	-Impact Factor (%)
0.00	0.0	47.51	N/A	31.60(L)	-0.00(L)	**	**
6.37	10.0	38.27	N/A	32.46(L)	-2.60(T)	**	**
7.84	12.3	36.13	N/A	31.34(L)	-3.21(T)	**	**
12.74	20.0	28.79	N/A	27.74(L)	-5.25(T)	**	**
19.10	30.0	19.25	N/A	23.29(L)	-8.46(T)	**	**
20.95	32.9	16.48	N/A	22.05(L)	-9.45(T)	**	**
25.47	40.0	9.54	N/A	19.03(L)	-11.82(T)	**	**
31.84	50.0	-0.00	N/A	15.14(T)	-15.14(T)	**	**
38.21	60.0	-9.54	N/A	11.82(T)	-19.03(L)	**	**
42.87	67.3	-16.54	N/A	9.37(T)	-22.15(L)	**	**
44.57	70.0	-19.25	N/A	8.46(T)	-23.29(L)	**	**
50.94	80.0	-28.79	N/A	5.25(T)	-27.74(L)	**	**
55.84	87.7	-36.13	N/A	3.21(T)	-31.34(L)	**	**
57.31	90.0	-38.27	N/A	2.60(T)	-32.46(L)	**	**
63.68	100.0	-47.51	N/A	-0.00(L)	-31.60(L)	**	**

Note:
"N/A" indicates not applicable
"**" indicates not available

LL Codes:
(T) Truck load controls
(L) Lane load controls

Note:
Impact and distribution factors included in above live load shears.

Individual Vehicle Load Factor Rating Summary

Live Load		Vehicle Type	Rating Factor	Controls	Capacity (Ton)	Location Span	(ft)	Percent	Impact	Lane
HS 20-44	Inventory	Lane	2.702	Service - Steel	97.26	1	31.84	50.0	As Requested	As Requested
	Operating	Lane	4.512	Service - Steel	162.43	1	31.84	50.0	As Requested	As Requested
HS 20-44	Inventory	Axle Load	1.906	Service - Steel	68.60	1	31.84	50.0	As Requested	As Requested
	Operating	Axle Load	3.182	Service - Steel	114.56	1	31.84	50.0	As Requested	As Requested

Note:
"N/A" indicates not applicable
"**" indicates not available

Reactions
Live Load HS 20-44

Support	Stage 1 DL (kip)	Stage 2 DL (kip)	+(LL+I) (kip)	-(LL+I) (kip)	Reaction +IF (%)	Reaction -IF (%)
1	47.64	N/A	35.79(T)	0.00(L)	26.500	0.000
2	47.64	N/A	35.79(T)	0.00(L)	26.500	0.000

Note:
"N/A" indicates not applicable
"**" indicates not available

LL Codes:
(T) Truck load controls
(L) Lane load controls

Note:
Impact and distribution factors included in above live load reactions.

Moments
Live Load HS 20-44

Span 1

Location (ft)	Percent	Stage 1 DL (kip-ft)	Stage 2 DL (kip-ft)	+(LL+I) (kip-ft)	-(LL+I) (kip-ft)	+Impact Factor (%)	-Impact Factor (%)
0.00	0.0	0.00	N/A	-0.00(L)	-0.00(L)	**	**
6.37	10.0	273.09	N/A	278.91(T)	0.00(L)	**	**
7.84	12.3	327.81	N/A	332.81(T)	0.00(L)	**	**
12.74	20.0	486.77	N/A	483.79(T)	0.00(L)	**	**
19.10	30.0	639.72	N/A	614.63(T)	0.00(L)	**	**
20.95	32.9	672.77	N/A	638.76(T)	0.00(L)	**	**
25.47	40.0	731.18	N/A	689.51(T)	0.00(L)	**	**
31.84	50.0	761.57	N/A	699.40(T)	0.00(L)	**	**
38.21	60.0	731.18	N/A	689.51(T)	0.00(L)	**	**
42.87	67.3	670.36	N/A	637.08(T)	0.00(L)	**	**
44.57	70.0	639.74	N/A	614.63(T)	0.00(L)	**	**
50.94	80.0	486.78	N/A	483.79(T)	0.00(L)	**	**
55.84	87.7	327.81	N/A	332.81(T)	0.00(L)	**	**
57.31	90.0	273.10	N/A	278.91(T)	0.00(L)	**	**
63.68	100.0	0.00	N/A	0.00(L)	0.00(L)	**	**

Note:
"N/A" indicates not applicable
"**" indicates not available

LL Codes:
(T) Truck load controls
(L) Lane load controls

Note:
Impact and distribution factors included in above live load moments.

Shears
Live Load HS 20-44

Span 1

Location (ft)	Percent	Stage 1 DL (kip)	Stage 2 DL (kip)	+(LL+I) (kip)	-(LL+I) (kip)	+Impact Factor (%)	-Impact Factor (%)
0.00	0.0	47.51	N/A	49.16(T)	-0.00(L)	**	**
6.37	10.0	38.27	N/A	44.12(T)	-2.60(T)	**	**
7.84	12.3	36.13	N/A	42.84(T)	-3.21(T)	**	**
12.74	20.0	28.79	N/A	38.56(T)	-5.25(T)	**	**
19.10	30.0	19.25	N/A	32.93(T)	-10.05(T)	**	**
20.95	32.9	16.48	N/A	31.28(T)	-11.62(T)	**	**
25.47	40.0	9.54	N/A	27.09(T)	-15.40(T)	**	**
31.84	50.0	-0.00	N/A	21.12(T)	-21.12(T)	**	**
38.21	60.0	-9.54	N/A	15.40(T)	-27.09(T)	**	**
42.87	67.3	-16.54	N/A	11.50(T)	-31.41(T)	**	**
44.57	70.0	-19.25	N/A	10.05(T)	-32.93(T)	**	**
50.94	80.0	-28.79	N/A	5.25(T)	-38.56(T)	**	**
55.84	87.7	-36.13	N/A	3.21(T)	-42.84(T)	**	**
57.31	90.0	-38.27	N/A	2.60(T)	-44.12(T)	**	**
63.68	100.0	-47.51	N/A	-0.00(L)	-49.16(T)	**	**

Note:
"N/A" indicates not applicable
"**" indicates not available

LL Codes:
(T) Truck load controls
(L) Lane load controls

Note:
Impact and distribution factors included in above live load shears.

Cross Section Properties topic is not available for the specified analysis engine!

Report by Action: ☑ **Flexure** ☑ **Shear** ☑ **Overload** ☑ **Critical**

Detailed Rating Results
H 20-44
Axle Load
Impact: As Requested
Lane: As Requested

Span 1

Location (ft)	Percent	Limit State	Units	Capacity	DL	LL	Inventory Rating Factor	Inventory Load Rating (Ton)	Operating Rating Factor	Operating Load Rating (Ton)
0.00	0.0	Flexure	KIP-FT	3021.01	0.00	0.00	99.000	1980.00	99.000	1980.00
0.00	**0.0**	**Shear**	**KIPS**	**386.05**	**47.51**	**26.36**	**5.666**	**113.32**	**9.462**	**189.24**
0.00	0.0	Overload	KSI	-33.00	-0.00	-0.00	99.000	1980.00	99.000	1980.00
6.37	10.0	Flexure	KIP-FT	3021.01	273.09	176.05	6.975	139.50	11.648	232.97
6.37	10.0	Shear	KIPS	386.05	38.27	27.85	5.562	111.24	9.289	185.77
6.37	**10.0**	**Overload**	**KSI**	**33.00**	**6.94**	**2.80**	**5.229**	**104.57**	**8.732**	**174.63**
7.84	12.3	Flexure	KIP-FT	3021.01	327.81	210.87	5.668	113.36	9.466	189.31
7.84	12.3	Shear	KIPS	386.05	36.13	27.15	5.753	115.07	9.608	192.16
7.84	**12.3**	**Overload**	**KSI**	**33.00**	**8.33**	**3.35**	**4.116**	**82.33**	**6.875**	**137.49**
12.74	20.0	Flexure	KIP-FT	4506.09	486.77	310.98	5.737	114.74	9.581	191.62
12.74	20.0	Shear	KIPS	386.05	28.79	24.79	6.478	129.56	10.818	216.36
12.74	**20.0**	**Overload**	**KSI**	**33.00**	**6.91**	**2.87**	**5.100**	**101.99**	**8.516**	**170.32**
19.10	30.0	Flexure	KIP-FT	4506.09	639.72	404.76	4.181	83.63	6.983	139.66
19.10	30.0	Shear	KIPS	386.05	19.25	21.69	7.667	153.35	12.805	256.09
19.10	**30.0**	**Overload**	**KSI**	**33.00**	**9.08**	**3.74**	**3.570**	**71.40**	**5.962**	**119.24**
25.47	40.0	Flexure	KIP-FT	4506.09	731.18	457.42	3.580	71.61	5.979	119.59
25.47	40.0	Shear	KIPS	386.05	9.54	18.46	9.325	186.51	15.574	311.47
25.47	**40.0**	**Overload**	**KSI**	**33.00**	**10.38**	**4.22**	**2.975**	**59.50**	**4.968**	**99.36**
31.84	50.0	Flexure	KIP-FT	4506.09	761.57	468.94	3.454	69.07	5.768	115.35
31.84	50.0	Shear	KIPS	386.05	0.00	15.14	11.748	234.96	19.619	392.38
31.84	**50.0**	**Overload**	**KSI**	**33.00**	**10.81**	**4.33**	**2.842**	**56.84**	**4.746**	**94.93**
38.21	60.0	Flexure	KIP-FT	4506.09	731.18	457.42	3.580	71.61	5.979	119.59
38.21	60.0	Shear	KIPS	386.05	9.54	18.46	9.325	186.51	15.574	311.47
38.21	**60.0**	**Overload**	**KSI**	**33.00**	**10.38**	**4.22**	**2.975**	**59.50**	**4.968**	**99.36**

44.57	70.0	Flexure	KIP-FT	4506.09	639.74	404.76	4.181	83.63	6.983	139.66
44.57	70.0	Shear	KIPS	386.05	19.25	21.69	7.667	153.35	12.805	256.09
44.57	**70.0**	**Overload**	**KSI**	**33.00**	**9.08**	**3.74**	**3.570**	**71.40**	**5.962**	**119.23**
50.94	80.0	Flexure	KIP-FT	4506.09	486.78	310.98	5.737	114.74	9.581	191.62
50.94	80.0	Shear	KIPS	386.05	28.79	24.79	6.478	129.56	10.818	216.36
50.94	**80.0**	**Overload**	**KSI**	**33.00**	**6.91**	**2.87**	**5.099**	**101.99**	**8.516**	**170.32**
55.84	87.7	Flexure	KIP-FT	3021.01	327.81	210.87	5.668	113.36	9.466	189.31
55.84	87.7	Shear	KIPS	386.05	36.13	27.15	5.753	115.07	9.608	192.16
55.84	**87.7**	**Overload**	**KSI**	**33.00**	**8.33**	**3.35**	**4.116**	**82.33**	**6.875**	**137.49**
57.31	90.0	Flexure	KIP-FT	3021.01	273.10	176.05	6.975	139.50	11.648	232.97
57.31	90.0	Shear	KIPS	386.05	38.27	27.85	5.562	111.24	9.289	185.77
57.31	**90.0**	**Overload**	**KSI**	**33.00**	**6.94**	**2.80**	**5.228**	**104.57**	**8.732**	**174.63**
63.68	100.0	Flexure	KIP-FT	3021.01	0.00	0.00	99.000	1980.00	99.000	1980.00
63.68	**100.0**	**Shear**	**KIPS**	**386.05**	**47.51**	**26.36**	**5.666**	**113.32**	**9.462**	**189.24**
63.68	100.0	Overload	KSI	-33.00	-0.00	-0.00	99.000	1980.00	99.000	1980.00

Detailed Rating Results
H 20-44
Lane
Impact: As Requested
Lane: As Requested

Span 1

Location							**Inventory Rating**	**Inventory Load Rating**	**Operating Rating**	**Operating Load Rating**
(ft)	**Percent**	**Limit State**	**Units**	**Capacity**	**DL**	**LL**	**Factor**	**(Ton)**	**Factor**	**(Ton)**
0.00	0.0	Flexure	KIP-FT	3021.01	0.00	0.00	99.000	1980.00	99.000	1980.00
0.00	**0.0**	**Shear**	**KIPS**	**386.05**	**47.51**	**31.60**	**4.728**	**94.55**	**7.895**	**157.90**
0.00	0.0	Overload	KSI	-33.00	-0.00	-0.00	99.000	1980.00	99.000	1980.00
6.37	10.0	Flexure	KIP-FT	3021.01	273.09	177.59	6.915	138.30	11.548	230.96
6.37	**10.0**	**Shear**	**KIPS**	**386.05**	**38.27**	**32.46**	**4.773**	**95.45**	**7.970**	**159.41**
6.37	10.0	Overload	KSI	33.00	6.94	2.82	5.183	103.67	8.656	173.13
7.84	12.3	Flexure	KIP-FT	3021.01	327.81	212.99	5.612	112.23	9.371	187.43
7.84	12.3	Shear	KIPS	386.05	36.13	31.34	4.983	99.66	8.322	166.43
7.84	**12.3**	**Overload**	**KSI**	**33.00**	**8.33**	**3.38**	**4.075**	**81.51**	**6.806**	**136.12**
12.74	20.0	Flexure	KIP-FT	4506.09	486.77	315.71	5.651	113.02	9.437	188.75

12.74	20.0	Shear	KIPS	386.05	28.79	27.74	5.789	115.78	9.667	193.35
12.74	**20.0**	**Overload**	**KSI**	**33.00**	**6.91**	**2.91**	**5.023**	**100.46**	**8.389**	**167.77**
19.10	30.0	Flexure	KIP-FT	4506.09	639.72	414.37	4.085	81.69	6.821	136.43
19.10	30.0	Shear	KIPS	386.05	19.25	23.29	7.139	142.77	11.922	238.43
19.10	**30.0**	**Overload**	**KSI**	**33.00**	**9.08**	**3.82**	**3.487**	**69.74**	**5.824**	**116.47**
25.47	40.0	Flexure	KIP-FT	4506.09	731.18	473.56	3.458	69.17	5.775	115.51
25.47	40.0	Shear	KIPS	386.05	9.54	19.03	9.043	180.86	15.102	302.04
25.47	**40.0**	**Overload**	**KSI**	**33.00**	**10.38**	**4.37**	**2.873**	**57.47**	**4.799**	**95.97**
31.84	50.0	Flexure	KIP-FT	4506.09	761.57	493.29	3.283	65.66	5.483	109.66
31.84	50.0	Shear	KIPS	386.05	0.00	15.01	11.843	236.87	19.778	395.57
31.84	**50.0**	**Overload**	**KSI**	**33.00**	**10.81**	**4.55**	**2.702**	**54.04**	**4.512**	**90.24**
38.21	60.0	Flexure	KIP-FT	4506.09	731.18	473.56	3.458	69.17	5.775	115.51
38.21	60.0	Shear	KIPS	386.05	9.54	19.03	9.043	180.86	15.102	302.04
38.21	**60.0**	**Overload**	**KSI**	**33.00**	**10.38**	**4.37**	**2.873**	**57.47**	**4.799**	**95.97**
44.57	70.0	Flexure	KIP-FT	4506.09	639.74	414.37	4.085	81.69	6.821	136.42
44.57	70.0	Shear	KIPS	386.05	19.25	23.29	7.139	142.77	11.922	238.43
44.57	**70.0**	**Overload**	**KSI**	**33.00**	**9.08**	**3.82**	**3.487**	**69.74**	**5.824**	**116.47**
50.94	80.0	Flexure	KIP-FT	4506.09	486.78	315.71	5.651	113.02	9.437	188.75
50.94	80.0	Shear	KIPS	386.05	28.79	27.74	5.789	115.78	9.667	193.35
50.94	**80.0**	**Overload**	**KSI**	**33.00**	**6.91**	**2.91**	**5.023**	**100.46**	**8.389**	**167.77**
55.84	87.7	Flexure	KIP-FT	3021.01	327.81	212.99	5.612	112.23	9.371	187.43
55.84	87.7	Shear	KIPS	386.05	36.13	31.34	4.983	99.66	8.322	166.43
55.84	**87.7**	**Overload**	**KSI**	**33.00**	**8.33**	**3.38**	**4.075**	**81.51**	**6.806**	**136.12**
57.31	90.0	Flexure	KIP-FT	3021.01	273.10	177.59	6.915	138.30	11.548	230.96
57.31	**90.0**	**Shear**	**KIPS**	**386.05**	**38.27**	**32.46**	**4.773**	**95.45**	**7.970**	**159.41**
57.31	90.0	Overload	KSI	33.00	6.94	2.82	5.183	103.67	8.656	173.13
63.68	100.0	Flexure	KIP-FT	3021.01	0.00	0.00	99.000	1980.00	99.000	1980.00
63.68	**100.0**	**Shear**	**KIPS**	**386.05**	**47.51**	**31.60**	**4.728**	**94.55**	**7.895**	**157.90**
63.68	100.0	Overload	KSI	-33.00	-0.00	-0.00	99.000	1980.00	99.000	1980.00

Detailed Rating Results
HS 20-44
Axle Load
Impact: As Requested
Lane: As Requested

Span 1

Location (ft)	Percent	Limit State	Units	Capacity	DL	LL	Inventory Rating Factor	Inventory Load Rating (Ton)	Operating Rating Factor	Operating Load Rating (Ton)
0.00	0.0	Flexure	KIP-FT	3021.01	0.00	0.00	99.000	3564.00	99.000	3564.00
0.00	**0.0**	**Shear**	**KIPS**	**386.05**	**47.51**	**49.16**	**3.039**	**109.39**	**5.074**	**182.68**
0.00	0.0	Overload	KSI	-33.00	-0.00	-0.00	99.000	3564.00	99.000	3564.00
6.37	10.0	Flexure	KIP-FT	3021.01	273.09	278.91	4.403	158.50	7.353	264.70
6.37	10.0	Shear	KIPS	386.05	38.27	44.12	3.511	126.39	5.863	211.07
6.37	**10.0**	**Overload**	**KSI**	**33.00**	**6.94**	**4.43**	**3.300**	**118.81**	**5.511**	**198.41**
7.84	12.3	Flexure	KIP-FT	3021.01	327.81	332.81	3.591	129.29	5.998	215.91
7.84	12.3	Shear	KIPS	386.05	36.13	42.84	3.645	131.23	6.088	219.16
7.84	**12.3**	**Overload**	**KSI**	**33.00**	**8.33**	**5.28**	**2.608**	**93.90**	**4.356**	**156.81**
12.74	20.0	Flexure	KIP-FT	4506.09	486.77	483.79	3.688	132.76	6.159	221.71
12.74	20.0	Shear	KIPS	386.05	28.79	38.56	4.164	149.90	6.954	250.34
12.74	**20.0**	**Overload**	**KSI**	**33.00**	**6.91**	**4.46**	**3.278**	**118.01**	**5.474**	**197.07**
19.10	30.0	Flexure	KIP-FT	4506.09	639.72	614.63	2.754	99.13	4.599	165.55
19.10	30.0	Shear	KIPS	386.05	19.25	32.93	5.049	181.78	8.432	303.57
19.10	**30.0**	**Overload**	**KSI**	**33.00**	**9.08**	**5.67**	**2.351**	**84.64**	**3.926**	**141.34**
25.47	40.0	Flexure	KIP-FT	4506.09	731.18	689.51	2.375	85.51	3.967	142.80
25.47	40.0	Shear	KIPS	386.05	9.54	27.09	6.353	228.71	10.610	381.95
25.47	**40.0**	**Overload**	**KSI**	**33.00**	**10.38**	**6.36**	**1.974**	**71.05**	**3.296**	**118.65**
31.84	50.0	Flexure	KIP-FT	4506.09	761.57	699.40	2.316	83.36	3.867	139.22
31.84	50.0	Shear	KIPS	386.05	0.00	21.12	8.421	303.17	14.064	506.29
31.84	**50.0**	**Overload**	**KSI**	**33.00**	**10.81**	**6.45**	**1.906**	**68.60**	**3.182**	**114.56**
38.21	60.0	Flexure	KIP-FT	4506.09	731.18	689.51	2.375	85.51	3.967	142.80
38.21	60.0	Shear	KIPS	386.05	9.54	27.09	6.353	228.71	10.610	381.95
38.21	**60.0**	**Overload**	**KSI**	**33.00**	**10.38**	**6.36**	**1.974**	**71.05**	**3.296**	**118.65**
44.57	70.0	Flexure	KIP-FT	4506.09	639.74	614.63	2.754	99.13	4.599	165.55
44.57	70.0	Shear	KIPS	386.05	19.25	32.93	5.049	181.78	8.432	303.57
44.57	**70.0**	**Overload**	**KSI**	**33.00**	**9.08**	**5.67**	**2.351**	**84.63**	**3.926**	**141.34**
50.94	80.0	Flexure	KIP-FT	4506.09	486.78	483.79	3.688	132.76	6.159	221.71
50.94	80.0	Shear	KIPS	386.05	28.79	38.56	4.164	149.90	6.954	250.34
50.94	**80.0**	**Overload**	**KSI**	**33.00**	**6.91**	**4.46**	**3.278**	**118.00**	**5.474**	**197.07**
55.84	87.7	Flexure	KIP-FT	3021.01	327.81	332.81	3.591	129.29	5.998	215.91

55.84	87.7	Shear	KIPS	386.05	36.13	42.84	3.645	131.23	6.088	219.16
55.84	**87.7**	**Overload**	**KSI**	**33.00**	**8.33**	**5.28**	**2.608**	**93.90**	**4.356**	**156.81**
57.31	90.0	Flexure	KIP-FT	3021.01	273.10	278.91	4.403	158.50	7.353	264.69
57.31	90.0	Shear	KIPS	386.05	38.27	44.12	3.511	126.39	5.863	211.07
57.31	**90.0**	**Overload**	**KSI**	**33.00**	**6.94**	**4.43**	**3.300**	**118.81**	**5.511**	**198.41**
63.68	100.0	Flexure	KIP-FT	3021.01	0.00	0.00	99.000	3564.00	99.000	3564.00
63.68	**100.0**	**Shear**	**KIPS**	**386.05**	**47.51**	**49.16**	**3.039**	**109.39**	**5.074**	**182.68**
63.68	100.0	Overload	KSI	-33.00	-0.00	-0.00	99.000	3564.00	99.000	3564.00

Detailed Rating Results
HS 20-44
Lane
Impact: As Requested
Lane: As Requested

Span 1

Location							Inventory Rating	Inventory Load Rating	Operating Rating	Operating Load Rating
(ft)	**Percent**	**Limit State**	**Units**	**Capacity**	**DL**	**LL**	**Factor**	**(Ton)**	**Factor**	**(Ton)**
0.00	0.0	Flexure	KIP-FT	3021.01	0.00	0.00	99.000	3564.00	99.000	3564.00
0.00	**0.0**	**Shear**	**KIPS**	**386.05**	**47.51**	**31.60**	**4.728**	**170.20**	**7.895**	**284.23**
0.00	0.0	Overload	KSI	-33.00	-0.00	-0.00	99.000	3564.00	99.000	3564.00
6.37	10.0	Flexure	KIP-FT	3021.01	273.09	177.59	6.915	248.94	11.548	415.73
6.37	**10.0**	**Shear**	**KIPS**	**386.05**	**38.27**	**32.46**	**4.773**	**171.82**	**7.970**	**286.93**
6.37	10.0	Overload	KSI	33.00	6.94	2.82	5.183	186.60	8.656	311.63
7.84	12.3	Flexure	KIP-FT	3021.01	327.81	212.99	5.612	202.02	9.371	337.37
7.84	12.3	Shear	KIPS	386.05	36.13	31.34	4.983	179.39	8.322	299.58
7.84	**12.3**	**Overload**	**KSI**	**33.00**	**8.33**	**3.38**	**4.075**	**146.72**	**6.806**	**245.02**
12.74	20.0	Flexure	KIP-FT	4506.09	486.77	315.71	5.651	203.44	9.437	339.75
12.74	20.0	Shear	KIPS	386.05	28.79	27.74	5.789	208.40	9.667	348.03
12.74	**20.0**	**Overload**	**KSI**	**33.00**	**6.91**	**2.91**	**5.023**	**180.83**	**8.389**	**301.99**
19.10	30.0	Flexure	KIP-FT	4506.09	639.72	414.37	4.085	147.05	6.821	245.57
19.10	30.0	Shear	KIPS	386.05	19.25	23.29	7.139	256.99	11.922	429.18
19.10	**30.0**	**Overload**	**KSI**	**33.00**	**9.08**	**3.82**	**3.487**	**125.54**	**5.824**	**209.65**
25.47	40.0	Flexure	KIP-FT	4506.09	731.18	473.56	3.458	124.50	5.775	207.92
25.47	40.0	Shear	KIPS	386.05	9.54	19.03	9.043	325.55	15.102	543.67
25.47	**40.0**	**Overload**	**KSI**	**33.00**	**10.38**	**4.37**	**2.873**	**103.44**	**4.799**	**172.75**

31.84	50.0	Flexure	KIP-FT	4506.09	761.57	493.29	3.283	118.19	5.483	197.38
31.84	50.0	Shear	KIPS	386.05	0.00	15.01	11.843	426.36	19.778	712.02
31.84	**50.0**	**Overload**	**KSI**	**33.00**	**10.81**	**4.55**	**2.702**	**97.26**	**4.512**	**162.43**
38.21	60.0	Flexure	KIP-FT	4506.09	731.18	473.56	3.458	124.50	5.775	207.92
38.21	60.0	Shear	KIPS	386.05	9.54	19.03	9.043	325.55	15.102	543.67
38.21	**60.0**	**Overload**	**KSI**	**33.00**	**10.38**	**4.37**	**2.873**	**103.45**	**4.799**	**172.75**
44.57	70.0	Flexure	KIP-FT	4506.09	639.74	414.37	4.085	147.04	6.821	245.56
44.57	70.0	Shear	KIPS	386.05	19.25	23.29	7.139	256.99	11.922	429.18
44.57	**70.0**	**Overload**	**KSI**	**33.00**	**9.08**	**3.82**	**3.487**	**125.54**	**5.824**	**209.65**
50.94	80.0	Flexure	KIP-FT	4506.09	486.78	315.71	5.651	203.44	9.437	339.75
50.94	80.0	Shear	KIPS	386.05	28.79	27.74	5.789	208.40	9.667	348.03
50.94	**80.0**	**Overload**	**KSI**	**33.00**	**6.91**	**2.91**	**5.023**	**180.83**	**8.389**	**301.99**
55.84	87.7	Flexure	KIP-FT	3021.01	327.81	212.99	5.612	202.02	9.371	337.37
55.84	87.7	Shear	KIPS	386.05	36.13	31.34	4.983	179.39	8.322	299.58
55.84	**87.7**	**Overload**	**KSI**	**33.00**	**8.33**	**3.38**	**4.075**	**146.72**	**6.806**	**245.02**
57.31	90.0	Flexure	KIP-FT	3021.01	273.10	177.59	6.915	248.94	11.548	415.73
57.31	**90.0**	**Shear**	**KIPS**	**386.05**	**38.27**	**32.46**	**4.773**	**171.81**	**7.970**	**286.93**
57.31	90.0	Overload	KSI	33.00	6.94	2.82	5.183	186.60	8.656	311.63
63.68	100.0	Flexure	KIP-FT	3021.01	0.00	0.00	99.000	3564.00	99.000	3564.00
63.68	**100.0**	**Shear**	**KIPS**	**386.05**	**47.51**	**31.60**	**4.728**	**170.20**	**7.895**	**284.23**
63.68	100.0	Overload	KSI	-33.00	-0.00	-0.00	99.000	3564.00	99.000	3564.00

Bridge Name: 1031529
NBI Structure ID: 1031529
Bridge ID: 1031529

Analyzed By: BrR
Analyze Date: Tuesday, April 15, 2014 10:54:17
Analysis Engine: AASHTO LFR Engine Version 6.5.0.3001
Analysis Preference Setting: None

Report By: brr
Report Date: Tuesday, April 15, 2014 11:13:07

Structure Definition Name: Span 3 (SB)
Member Name: G1 (S13 plan designation)
Member Alternative Name: 5% Section Loss

Load Factor Rating Summary

Live Load		Rating Factor	Controls	Capacity (Ton)	Location Span	Location (ft)	Location Percent	Impact	Lane
H 20-44	Inventory	2.500	Service - Steel	50.00	1	20.82	50.0	As Requested	As Requested
	Operating	4.175	Service - Steel	83.50	1	20.82	50.0	As Requested	As Requested
HS 20-44	Inventory	1.919	Service - Steel	69.08	1	20.82	50.0	As Requested	As Requested
	Operating	3.204	Service - Steel	115.36	1	20.82	50.0	As Requested	As Requested

Note:
"N/A" indicates not applicable
"**" indicates not available

Individual Vehicle Load Factor Rating Summary

Live Load		Vehicle Type	Rating Factor	Controls	Capacity (Ton)	Location Span	(ft)	Percent	Impact	Lane
H 20-44	Inventory	Lane	2.763	Service - Steel	55.26	1	20.82	50.0	As Requested	As Requested
	Operating	Lane	4.614	Service - Steel	92.28	1	20.82	50.0	As Requested	As Requested
H 20-44	Inventory	Axle Load	2.500	Service - Steel	50.00	1	20.82	50.0	As Requested	As Requested
	Operating	Axle Load	4.175	Service - Steel	83.50	1	20.82	50.0	As Requested	As Requested

Note:
"N/A" indicates not applicable
"**" indicates not available

Reactions
Live Load H 20-44

Support	Stage 1 DL (kip)	Stage 2 DL (kip)	+(LL+I) (kip)	-(LL+I) (kip)	Reaction +IF (%)	Reaction -IF (%)
1	29.97	N/A	23.31(L)	0.00(L)	30.000	0.000
2	29.96	N/A	23.31(L)	0.00(L)	30.000	0.000

Note:
"N/A" indicates not applicable
"**" indicates not available

LL Codes:
(T) Truck load controls
(L) Lane load controls

Note:
Impact and distribution factors included in above live load reactions.

Moments
Live Load H 20-44

Span 1

Location (ft)	Percent	Stage 1 DL (kip-ft)	Stage 2 DL (kip-ft)	+(LL+I) (kip-ft)	-(LL+I) (kip-ft)	+Impact Factor (%)	-Impact Factor (%)
0.00	0.0	-0.00	N/A	-0.00(L)	-0.00(L)	**	**
4.16	10.0	111.88	N/A	115.12(T)	0.00(L)	**	**
8.33	20.0	198.97	N/A	202.60(T)	0.00(L)	**	**
12.49	30.0	261.28	N/A	262.43(T)	0.00(L)	**	**
16.66	40.0	298.81	N/A	294.61(T)	0.00(L)	**	**
20.07	48.2	311.07	N/A	300.37(T)	0.00(L)	**	**
20.82	50.0	311.42	N/A	299.14(T)	0.00(L)	**	**
24.99	60.0	298.71	N/A	294.61(T)	0.00(L)	**	**
29.15	70.0	261.21	N/A	262.43(T)	0.00(L)	**	**
33.32	80.0	198.93	N/A	202.60(T)	0.00(L)	**	**
37.48	90.0	111.86	N/A	115.12(T)	0.00(L)	**	**
41.65	100.0	-0.00	N/A	0.00(L)	0.00(L)	**	**

Note:
"N/A" indicates not applicable
"**" indicates not available

LL Codes:
(T) Truck load controls
(L) Lane load controls

Note:
Impact and distribution factors included in above live load moments.

Shears
Live Load H 20-44

Span 1

Location (ft)	Percent	Stage 1 DL (kip)	Stage 2 DL (kip)	+(LL+I) (kip)	-(LL+I) (kip)	+Impact Factor (%)	-Impact Factor (%)
0.00	0.0	29.84	N/A	26.47(L)	-0.00(L)	**	**
4.16	10.0	23.89	N/A	28.38(L)	-2.66(T)	**	**
8.33	20.0	17.94	N/A	24.34(L)	-5.31(T)	**	**
12.49	30.0	11.98	N/A	21.00(T)	-7.97(T)	**	**
16.66	40.0	6.03	N/A	17.68(T)	-11.05(T)	**	**
20.07	48.2	1.17	N/A	14.97(T)	-13.76(T)	**	**
20.82	50.0	-0.08	N/A	14.36(T)	-14.36(T)	**	**
24.99	60.0	-6.03	N/A	11.05(T)	-17.68(T)	**	**
29.15	70.0	-11.98	N/A	7.97(T)	-21.00(T)	**	**
33.32	80.0	-17.93	N/A	5.31(T)	-24.34(L)	**	**
37.48	90.0	-23.88	N/A	2.66(T)	-28.38(L)	**	**
41.65	100.0	-29.83	N/A	-0.00(L)	-26.47(L)	**	**

Note:
"N/A" indicates not applicable
"**" indicates not available

LL Codes:
(T) Truck load controls
(L) Lane load controls

Note:
Impact and distribution factors included in above live load shears.

Individual Vehicle Load Factor Rating Summary

Live Load		Vehicle Type	Rating Factor	Controls	Capacity (Ton)	Location Span	(ft)	Percent	Impact	Lane
HS 20-44	Inventory	Lane	2.763	Service - Steel	99.46	1	20.82	50.0	As Requested	As Requested
	Operating	Lane	4.614	Service - Steel	166.10	1	20.82	50.0	As Requested	As Requested
HS 20-44	Inventory	Axle Load	1.919	Service - Steel	69.08	1	20.82	50.0	As Requested	As Requested
	Operating	Axle Load	3.204	Service - Steel	115.36	1	20.82	50.0	As Requested	As Requested

Note:
"N/A" indicates not applicable
"**" indicates not available

Reactions
Live Load HS 20-44

Support	Stage 1 DL (kip)	Stage 2 DL (kip)	+(LL+I) (kip)	-(LL+I) (kip)	Reaction +IF (%)	Reaction -IF (%)
1	29.97	N/A	33.11(T)	0.00(L)	30.000	0.000
2	29.96	N/A	33.11(T)	0.00(L)	30.000	0.000

Note:
"N/A" indicates not applicable
"**" indicates not available

LL Codes:
(T) Truck load controls
(L) Lane load controls

Note:
Impact and distribution factors included in above live load reactions.

Moments
Live Load HS 20-44

Span 1

Location (ft)	Percent	Stage 1 DL (kip-ft)	Stage 2 DL (kip-ft)	+(LL+I) (kip-ft)	-(LL+I) (kip-ft)	+Impact Factor (%)	-Impact Factor (%)
0.00	0.0	-0.00	N/A	-0.00(L)	-0.00(L)	**	**
4.16	10.0	111.88	N/A	168.19(T)	0.00(L)	**	**
8.33	20.0	198.97	N/A	286.62(T)	0.00(L)	**	**
12.49	30.0	261.28	N/A	355.27(T)	0.00(L)	**	**
16.66	40.0	298.81	N/A	392.75(T)	0.00(L)	**	**
20.07	48.2	311.07	N/A	394.00(T)	0.00(L)	**	**
20.82	50.0	311.42	N/A	389.75(T)	0.00(L)	**	**
24.99	60.0	298.71	N/A	392.75(T)	0.00(L)	**	**
29.15	70.0	261.21	N/A	355.27(T)	0.00(L)	**	**
33.32	80.0	198.93	N/A	286.62(T)	0.00(L)	**	**
37.48	90.0	111.86	N/A	168.19(T)	0.00(L)	**	**
41.65	100.0	-0.00	N/A	0.00(L)	0.00(L)	**	**

Note:
"N/A" indicates not applicable
"**" indicates not available

LL Codes:
(T) Truck load controls
(L) Lane load controls

Note:
Impact and distribution factors included in above live load moments.

Shears
Live Load HS 20-44

Span 1

Location (ft)	Percent	Stage 1 DL (kip)	Stage 2 DL (kip)	+(LL+I) (kip)	-(LL+I) (kip)	+Impact Factor (%)	-Impact Factor (%)
0.00	0.0	29.84	N/A	45.64(T)	-0.00(L)	**	**
4.16	10.0	23.89	N/A	40.38(T)	-2.66(T)	**	**
8.33	20.0	17.94	N/A	34.41(T)	-5.31(T)	**	**
12.49	30.0	11.98	N/A	28.43(T)	-7.97(T)	**	**
16.66	40.0	6.03	N/A	22.94(T)	-12.32(T)	**	**
20.07	48.2	1.17	N/A	18.59(T)	-16.66(T)	**	**
20.82	50.0	-0.08	N/A	17.63(T)	-17.63(T)	**	**
24.99	60.0	-6.03	N/A	12.32(T)	-22.94(T)	**	**
29.15	70.0	-11.98	N/A	7.97(T)	-28.43(T)	**	**
33.32	80.0	-17.93	N/A	5.31(T)	-34.41(T)	**	**
37.48	90.0	-23.88	N/A	2.66(T)	-40.38(T)	**	**
41.65	100.0	-29.83	N/A	-0.00(L)	-45.64(T)	**	**

Note:
"N/A" indicates not applicable
"**" indicates not available

LL Codes:
(T) Truck load controls
(L) Lane load controls

Note:
Impact and distribution factors included in above live load shears.

Cross Section Properties topic is not available for the specified analysis engine!

Report by Action: ☑ **Flexure** ☑ **Shear** ☑ **Overload** ☑ **Critical**

Detailed Rating Results
H 20-44
Axle Load
Impact: As Requested
Lane: As Requested

Span 1

Location (ft)	Percent	Limit State	Units	Capacity	DL	LL	Inventory Rating Factor	Inventory Load Rating (Ton)	Operating Rating Factor	Operating Load Rating (Ton)
0.00	0.0	Flexure	KIP-FT	2722.27	0.00	0.00	99.000	1980.00	99.000	1980.00
0.00	**0.0**	**Shear**	**KIPS**	**370.61**	**29.84**	**26.36**	**5.798**	**115.96**	**9.682**	**193.65**
0.00	0.0	Overload	KSI	-33.00	-0.00	-0.00	99.000	1980.00	99.000	1980.00
4.16	10.0	Flexure	KIP-FT	2722.27	111.88	115.12	10.310	206.20	17.218	344.35
4.16	**10.0**	**Shear**	**KIPS**	**370.61**	**23.89**	**27.64**	**5.658**	**113.17**	**9.450**	**188.99**
4.16	10.0	Overload	KSI	33.00	3.28	2.05	8.203	164.06	13.699	273.99
8.33	20.0	Flexure	KIP-FT	2722.27	198.97	202.60	5.601	112.02	9.354	187.07
8.33	20.0	Shear	KIPS	370.61	17.94	24.32	6.577	131.54	10.984	219.68
8.33	**20.0**	**Overload**	**KSI**	**33.00**	**5.83**	**3.61**	**4.238**	**84.76**	**7.077**	**141.55**
12.49	30.0	Flexure	KIP-FT	2722.27	261.28	262.43	4.182	83.64	6.984	139.68
12.49	30.0	Shear	KIPS	370.61	11.98	21.00	7.786	155.72	13.003	260.06
12.49	**30.0**	**Overload**	**KSI**	**33.00**	**7.65**	**4.67**	**3.038**	**60.76**	**5.073**	**101.47**
16.66	40.0	Flexure	KIP-FT	2722.27	298.81	294.61	3.649	72.98	6.094	121.87
16.66	40.0	Shear	KIPS	370.61	6.03	17.68	9.449	188.98	15.780	315.60
16.66	**40.0**	**Overload**	**KSI**	**33.00**	**8.75**	**5.24**	**2.581**	**51.61**	**4.310**	**86.19**
20.82	50.0	Flexure	KIP-FT	2722.27	311.42	299.14	3.568	71.37	5.959	119.18
20.82	50.0	Shear	KIPS	370.61	0.08	14.36	11.881	237.62	19.841	396.82
20.82	**50.0**	**Overload**	**KSI**	**33.00**	**9.12**	**5.32**	**2.500**	**50.00**	**4.175**	**83.50**
24.99	60.0	Flexure	KIP-FT	2722.27	298.71	294.61	3.649	72.98	6.094	121.88
24.99	60.0	Shear	KIPS	370.61	6.03	17.68	9.449	188.99	15.780	315.61
24.99	**60.0**	**Overload**	**KSI**	**33.00**	**8.75**	**5.24**	**2.581**	**51.62**	**4.310**	**86.20**
29.15	70.0	Flexure	KIP-FT	2722.27	261.21	262.43	4.182	83.64	6.984	139.68
29.15	70.0	Shear	KIPS	370.61	11.98	21.00	7.786	155.73	13.003	260.06
29.15	**70.0**	**Overload**	**KSI**	**33.00**	**7.65**	**4.67**	**3.038**	**60.76**	**5.074**	**101.48**

33.32	80.0	Flexure	KIP-FT	2722.27	198.93	202.60	5.601	112.02	9.354	187.08
33.32	80.0	Shear	KIPS	370.61	17.93	24.32	6.577	131.55	10.984	219.68
33.32	**80.0**	**Overload**	**KSI**	**33.00**	**5.82**	**3.61**	**4.238**	**84.76**	**7.078**	**141.55**
37.48	90.0	Flexure	KIP-FT	2722.27	111.86	115.12	10.310	206.20	17.218	344.36
37.48	**90.0**	**Shear**	**KIPS**	**370.61**	**23.88**	**27.64**	**5.659**	**113.17**	**9.450**	**189.00**
37.48	90.0	Overload	KSI	33.00	3.28	2.05	8.203	164.07	13.700	273.99
41.65	100.0	Flexure	KIP-FT	2722.27	0.00	0.00	99.000	1980.00	99.000	1980.00
41.65	**100.0**	**Shear**	**KIPS**	**370.61**	**29.83**	**26.36**	**5.798**	**115.96**	**9.683**	**193.65**
41.65	100.0	Overload	KSI	-33.00	-0.00	-0.00	99.000	1980.00	99.000	1980.00

Detailed Rating Results
H 20-44
Lane
Impact: As Requested
Lane: As Requested

Span 1

Location							Inventory Rating	Inventory Load Rating	Operating Rating	Operating Load Rating
(ft)	**Percent**	**Limit State**	**Units**	**Capacity**	**DL**	**LL**	**Factor**	**(Ton)**	**Factor**	**(Ton)**
0.00	0.0	Flexure	KIP-FT	2722.27	0.00	0.00	99.000	1980.00	99.000	1980.00
0.00	**0.0**	**Shear**	**KIPS**	**370.61**	**29.84**	**26.47**	**5.774**	**115.48**	**9.643**	**192.85**
0.00	0.0	Overload	KSI	-33.00	-0.00	-0.00	99.000	1980.00	99.000	1980.00
4.16	10.0	Flexure	KIP-FT	2722.27	111.88	97.44	12.181	243.61	20.342	406.83
4.16	**10.0**	**Shear**	**KIPS**	**370.61**	**23.89**	**28.38**	**5.512**	**110.24**	**9.205**	**184.10**
4.16	10.0	Overload	KSI	33.00	3.28	1.73	9.692	193.83	16.185	323.70
8.33	20.0	Flexure	KIP-FT	2722.27	198.97	173.23	6.551	131.01	10.939	218.79
8.33	20.0	Shear	KIPS	370.61	17.94	24.34	6.573	131.46	10.977	219.53
8.33	**20.0**	**Overload**	**KSI**	**33.00**	**5.83**	**3.08**	**4.956**	**99.13**	**8.277**	**165.54**
12.49	30.0	Flexure	KIP-FT	2722.27	261.28	227.37	4.827	96.54	8.061	161.21
12.49	30.0	Shear	KIPS	370.61	11.98	20.52	7.969	159.38	13.308	266.16
12.49	**30.0**	**Overload**	**KSI**	**33.00**	**7.65**	**4.05**	**3.506**	**70.13**	**5.856**	**117.11**
16.66	40.0	Flexure	KIP-FT	2722.27	298.81	259.85	4.137	82.74	6.909	138.17
16.66	40.0	Shear	KIPS	370.61	6.03	16.93	9.872	197.44	16.486	329.73
16.66	**40.0**	**Overload**	**KSI**	**33.00**	**8.75**	**4.63**	**2.926**	**58.52**	**4.886**	**97.72**
20.82	50.0	Flexure	KIP-FT	2722.27	311.42	270.68	3.944	78.87	6.586	131.72

20.82	50.0	Shear	KIPS	370.61	0.08	13.55	12.593	251.86	21.030	420.61
20.82	**50.0**	**Overload**	**KSI**	**33.00**	**9.12**	**4.82**	**2.763**	**55.26**	**4.614**	**92.28**
24.99	60.0	Flexure	KIP-FT	2722.27	298.71	259.85	4.137	82.74	6.909	138.18
24.99	60.0	Shear	KIPS	370.61	6.03	16.93	9.872	197.44	16.487	329.73
24.99	**60.0**	**Overload**	**KSI**	**33.00**	**8.75**	**4.63**	**2.926**	**58.52**	**4.887**	**97.73**
29.15	70.0	Flexure	KIP-FT	2722.27	261.21	227.37	4.827	96.54	8.061	161.22
29.15	70.0	Shear	KIPS	370.61	11.98	20.52	7.969	159.38	13.308	266.17
29.15	**70.0**	**Overload**	**KSI**	**33.00**	**7.65**	**4.05**	**3.507**	**70.13**	**5.856**	**117.12**
33.32	80.0	Flexure	KIP-FT	2722.27	198.93	173.23	6.551	131.01	10.940	218.79
33.32	80.0	Shear	KIPS	370.61	17.93	24.34	6.573	131.46	10.977	219.54
33.32	**80.0**	**Overload**	**KSI**	**33.00**	**5.82**	**3.08**	**4.957**	**99.13**	**8.278**	**165.55**
37.48	90.0	Flexure	KIP-FT	2722.27	111.86	97.44	12.181	243.61	20.342	406.84
37.48	**90.0**	**Shear**	**KIPS**	**370.61**	**23.88**	**28.38**	**5.512**	**110.24**	**9.205**	**184.11**
37.48	90.0	Overload	KSI	33.00	3.28	1.73	9.692	193.84	16.185	323.71
41.65	100.0	Flexure	KIP-FT	2722.27	0.00	0.00	99.000	1980.00	99.000	1980.00
41.65	**100.0**	**Shear**	**KIPS**	**370.61**	**29.83**	**26.47**	**5.774**	**115.48**	**9.643**	**192.86**
41.65	100.0	Overload	KSI	-33.00	-0.00	-0.00	99.000	1980.00	99.000	1980.00

Detailed Rating Results
HS 20-44
Axle Load
Impact: As Requested
Lane: As Requested

Span 1

Location							Inventory Rating Factor	Inventory Load Rating (Ton)	Operating Rating Factor	Operating Load Rating (Ton)
(ft)	**Percent**	**Limit State**	**Units**	**Capacity**	**DL**	**LL**				
0.00	0.0	Flexure	KIP-FT	2722.27	0.00	0.00	99.000	3564.00	99.000	3564.00
0.00	**0.0**	**Shear**	**KIPS**	**370.61**	**29.84**	**45.64**	**3.349**	**120.56**	**5.593**	**201.33**
0.00	0.0	Overload	KSI	-33.00	-0.00	-0.00	99.000	3564.00	99.000	3564.00
4.16	10.0	Flexure	KIP-FT	2722.27	111.88	168.19	7.057	254.05	11.785	424.27
4.16	**10.0**	**Shear**	**KIPS**	**370.61**	**23.89**	**40.38**	**3.873**	**139.43**	**6.468**	**232.85**
4.16	10.0	Overload	KSI	33.00	3.28	2.99	5.615	202.14	9.377	337.57
8.33	20.0	Flexure	KIP-FT	2722.27	198.97	286.62	3.959	142.53	6.612	238.03
8.33	20.0	Shear	KIPS	370.61	17.94	34.41	4.649	167.37	7.764	279.51
8.33	**20.0**	**Overload**	**KSI**	**33.00**	**5.83**	**5.10**	**2.996**	**107.84**	**5.003**	**180.10**

12.49	30.0	Flexure	KIP-FT	2722.27	261.28	355.27	3.089	111.21	5.159	185.72
12.49	30.0	Shear	KIPS	370.61	11.98	28.43	5.751	207.05	9.605	345.78
12.49	**30.0**	**Overload**	**KSI**	**33.00**	**7.65**	**6.32**	**2.244**	**80.78**	**3.748**	**134.91**
16.66	40.0	Flexure	KIP-FT	2722.27	298.81	392.75	2.737	98.54	4.571	164.56
16.66	40.0	Shear	KIPS	370.61	6.03	22.94	7.284	262.24	12.165	437.94
16.66	**40.0**	**Overload**	**KSI**	**33.00**	**8.75**	**6.99**	**1.936**	**69.69**	**3.233**	**116.38**
20.82	50.0	Flexure	KIP-FT	2722.27	311.42	389.75	2.739	98.60	4.574	164.66
20.82	50.0	Shear	KIPS	370.61	0.08	17.63	9.681	348.53	16.168	582.05
20.82	**50.0**	**Overload**	**KSI**	**33.00**	**9.12**	**6.94**	**1.919**	**69.08**	**3.204**	**115.36**
24.99	60.0	Flexure	KIP-FT	2722.27	298.71	392.75	2.737	98.54	4.571	164.56
24.99	60.0	Shear	KIPS	370.61	6.03	22.94	7.285	262.25	12.165	437.95
24.99	**60.0**	**Overload**	**KSI**	**33.00**	**8.75**	**6.99**	**1.936**	**69.70**	**3.233**	**116.39**
29.15	70.0	Flexure	KIP-FT	2722.27	261.21	355.27	3.089	111.21	5.159	185.72
29.15	70.0	Shear	KIPS	370.61	11.98	28.43	5.752	207.06	9.605	345.78
29.15	**70.0**	**Overload**	**KSI**	**33.00**	**7.65**	**6.32**	**2.244**	**80.79**	**3.748**	**134.92**
33.32	80.0	Flexure	KIP-FT	2722.27	198.93	286.62	3.959	142.54	6.612	238.04
33.32	80.0	Shear	KIPS	370.61	17.93	34.41	4.649	167.37	7.764	279.52
33.32	**80.0**	**Overload**	**KSI**	**33.00**	**5.82**	**5.10**	**2.996**	**107.85**	**5.003**	**180.11**
37.48	90.0	Flexure	KIP-FT	2722.27	111.86	168.19	7.057	254.06	11.785	424.27
37.48	**90.0**	**Shear**	**KIPS**	**370.61**	**23.88**	**40.38**	**3.873**	**139.44**	**6.468**	**232.86**
37.48	90.0	Overload	KSI	33.00	3.28	2.99	5.615	202.14	9.377	337.58
41.65	100.0	Flexure	KIP-FT	2722.27	0.00	0.00	99.000	3564.00	99.000	3564.00
41.65	**100.0**	**Shear**	**KIPS**	**370.61**	**29.83**	**45.64**	**3.349**	**120.56**	**5.593**	**201.34**
41.65	100.0	Overload	KSI	-33.00	-0.00	-0.00	99.000	3564.00	99.000	3564.00

Detailed Rating Results
HS 20-44
Lane
Impact: As Requested
Lane: As Requested

Span 1

Location							Inventory Rating	Inventory Load Rating	Operating Rating	Operating Load Rating
(ft)	**Percent**	**Limit State**	**Units**	**Capacity**	**DL**	**LL**	**Factor**	**(Ton)**	**Factor**	**(Ton)**
0.00	0.0	Flexure	KIP-FT	2722.27	0.00	0.00	99.000	3564.00	99.000	3564.00

0.00	**0.0**	**Shear**	**KIPS**	**370.61**	**29.84**	**26.47**	**5.774**	**207.86**	**9.643**	**347.13**
0.00	0.0	Overload	KSI	-33.00	-0.00	-0.00	99.000	3564.00	99.000	3564.00
4.16	10.0	Flexure	KIP-FT	2722.27	111.88	97.44	12.181	438.50	20.342	732.30
4.16	**10.0**	**Shear**	**KIPS**	**370.61**	**23.89**	**28.38**	**5.512**	**198.43**	**9.205**	**331.38**
4.16	10.0	Overload	KSI	33.00	3.28	1.73	9.692	348.90	16.185	582.66
8.33	20.0	Flexure	KIP-FT	2722.27	198.97	173.23	6.551	235.82	10.939	393.82
8.33	20.0	Shear	KIPS	370.61	17.94	24.34	6.573	236.62	10.977	395.16
8.33	**20.0**	**Overload**	**KSI**	**33.00**	**5.83**	**3.08**	**4.956**	**178.43**	**8.277**	**297.97**
12.49	30.0	Flexure	KIP-FT	2722.27	261.28	227.37	4.827	173.76	8.061	290.19
12.49	30.0	Shear	KIPS	370.61	11.98	20.52	7.969	286.88	13.308	479.09
12.49	**30.0**	**Overload**	**KSI**	**33.00**	**7.65**	**4.05**	**3.506**	**126.23**	**5.856**	**210.80**
16.66	40.0	Flexure	KIP-FT	2722.27	298.81	259.85	4.137	148.93	6.909	248.71
16.66	40.0	Shear	KIPS	370.61	6.03	16.93	9.872	355.39	16.486	593.51
16.66	**40.0**	**Overload**	**KSI**	**33.00**	**8.75**	**4.63**	**2.926**	**105.33**	**4.886**	**175.90**
20.82	50.0	Flexure	KIP-FT	2722.27	311.42	270.68	3.944	141.97	6.586	237.09
20.82	50.0	Shear	KIPS	370.61	0.08	13.55	12.593	453.35	21.030	757.09
20.82	**50.0**	**Overload**	**KSI**	**33.00**	**9.12**	**4.82**	**2.763**	**99.46**	**4.614**	**166.10**
24.99	60.0	Flexure	KIP-FT	2722.27	298.71	259.85	4.137	148.94	6.909	248.73
24.99	60.0	Shear	KIPS	370.61	6.03	16.93	9.872	355.40	16.487	593.52
24.99	**60.0**	**Overload**	**KSI**	**33.00**	**8.75**	**4.63**	**2.926**	**105.34**	**4.887**	**175.92**
29.15	70.0	Flexure	KIP-FT	2722.27	261.21	227.37	4.827	173.77	8.061	290.20
29.15	70.0	Shear	KIPS	370.61	11.98	20.52	7.969	286.89	13.308	479.10
29.15	**70.0**	**Overload**	**KSI**	**33.00**	**7.65**	**4.05**	**3.507**	**126.24**	**5.856**	**210.82**
33.32	80.0	Flexure	KIP-FT	2722.27	198.93	173.23	6.551	235.82	10.940	393.83
33.32	80.0	Shear	KIPS	370.61	17.93	24.34	6.573	236.63	10.977	395.17
33.32	**80.0**	**Overload**	**KSI**	**33.00**	**5.82**	**3.08**	**4.957**	**178.44**	**8.278**	**297.99**
37.48	90.0	Flexure	KIP-FT	2722.27	111.86	97.44	12.181	438.51	20.342	732.30
37.48	**90.0**	**Shear**	**KIPS**	**370.61**	**23.88**	**28.38**	**5.512**	**198.44**	**9.205**	**331.39**
37.48	90.0	Overload	KSI	33.00	3.28	1.73	9.692	348.91	16.185	582.67
41.65	100.0	Flexure	KIP-FT	2722.27	0.00	0.00	99.000	3564.00	99.000	3564.00
41.65	**100.0**	**Shear**	**KIPS**	**370.61**	**29.83**	**26.47**	**5.774**	**207.87**	**9.643**	**347.14**
41.65	100.0	Overload	KSI	-33.00	-0.00	-0.00	99.000	3564.00	99.000	3564.00

Bridge Name: 1031529
NBI Structure ID: 1031529
Bridge ID: 1031529

Analyzed By: BrR
Analyze Date: Tuesday, April 15, 2014 10:54:17
Analysis Engine: AASHTO LFR Engine Version 6.5.0.3001
Analysis Preference Setting: None

Report By: brr
Report Date: Tuesday, April 15, 2014 11:13:07

Structure Definition Name: Span 3 (SB)
Member Name: G2 (S14 plan designation)
Member Alternative Name: 5% Section Loss

Load Factor Rating Summary

Live Load		Rating Factor	Controls	Capacity (Ton)	Span	Location (ft)	Percent	Impact	Lane
H 20-44	Inventory	3.096	Service - Steel	61.92	1	20.83	50.0	As Requested	As Requested
	Operating	5.171	Service - Steel	103.41	1	20.83	50.0	As Requested	As Requested
HS 20-44	Inventory	2.376	Service - Steel	85.55	1	20.83	50.0	As Requested	As Requested
	Operating	3.969	Service - Steel	142.87	1	20.83	50.0	As Requested	As Requested

Note:
"N/A" indicates not applicable
"**" indicates not available

Individual Vehicle Load Factor Rating Summary

Live Load		Vehicle Type	Rating Factor	Controls	Capacity (Ton)	Location Span	(ft)	Percent	Impact	Lane
H 20-44	Inventory	Lane	3.422	Service - Steel	68.44	1	20.83	50.0	As Requested	As Requested
	Operating	Lane	5.714	Service - Steel	114.29	1	20.83	50.0	As Requested	As Requested
H 20-44	Inventory	Axle Load	3.096	Service - Steel	61.92	1	20.83	50.0	As Requested	As Requested
	Operating	Axle Load	5.171	Service - Steel	103.41	1	20.83	50.0	As Requested	As Requested

Note:
"N/A" indicates not applicable
"**" indicates not available

Reactions
Live Load H 20-44

Support	Stage 1 DL (kip)	Stage 2 DL (kip)	+(LL+I) (kip)	-(LL+I) (kip)	Reaction +IF (%)	Reaction -IF (%)
1	20.84	N/A	41.17(L)	0.00(L)	30.000	0.000
2	20.82	N/A	41.17(L)	0.00(L)	30.000	0.000

Note:
"N/A" indicates not applicable
"**" indicates not available

LL Codes:
(T) Truck load controls
(L) Lane load controls

Note:
Impact and distribution factors included in above live load reactions.

Moments
Live Load H 20-44

Span 1

Location (ft)	Percent	Stage 1 DL (kip-ft)	Stage 2 DL (kip-ft)	+(LL+I) (kip-ft)	-(LL+I) (kip-ft)	+Impact Factor (%)	-Impact Factor (%)
0.00	0.0	-0.00	N/A	-0.00(L)	-0.00(L)	**	**
4.17	10.0	77.18	N/A	122.97(T)	0.00(L)	**	**
8.33	20.0	137.36	N/A	216.41(T)	0.00(L)	**	**
12.50	30.0	180.54	N/A	280.32(T)	0.00(L)	**	**
16.66	40.0	206.71	N/A	314.69(T)	0.00(L)	**	**
20.07	48.2	215.48	N/A	320.85(T)	0.00(L)	**	**
20.83	50.0	215.77	N/A	319.53(T)	0.00(L)	**	**
21.12	50.7	215.72	N/A	320.16(T)	0.00(L)	**	**
24.99	60.0	206.65	N/A	314.69(T)	0.00(L)	**	**
29.16	70.0	180.49	N/A	280.32(T)	0.00(L)	**	**
33.32	80.0	137.33	N/A	216.41(T)	0.00(L)	**	**
37.49	90.0	77.17	N/A	122.97(T)	0.00(L)	**	**
41.65	100.0	0.00	N/A	0.00(L)	0.00(L)	**	**

Note:
"N/A" indicates not applicable
"**" indicates not available

LL Codes:
(T) Truck load controls
(L) Lane load controls

Note:
Impact and distribution factors included in above live load moments.

Shears
Live Load H 20-44

Span 1

Location (ft)	Percent	Stage 1 DL (kip)	Stage 2 DL (kip)	+(LL+I) (kip)	-(LL+I) (kip)	+Impact Factor (%)	-Impact Factor (%)
0.00	0.0	20.57	N/A	39.03(L)	-0.00(L)	**	**
4.17	10.0	16.49	N/A	30.31(L)	-2.84(T)	**	**
8.33	20.0	12.41	N/A	26.00(L)	-5.67(T)	**	**
12.50	30.0	8.33	N/A	22.43(T)	-8.51(T)	**	**
16.66	40.0	4.24	N/A	18.89(T)	-11.80(T)	**	**
20.07	48.2	0.90	N/A	15.99(T)	-14.70(T)	**	**
20.83	50.0	0.00	N/A	15.34(T)	-15.34(T)	**	**
21.12	50.7	-0.28	N/A	15.10(T)	-15.59(T)	**	**
24.99	60.0	-4.24	N/A	11.80(T)	-18.89(T)	**	**
29.16	70.0	-8.32	N/A	8.51(T)	-22.43(T)	**	**
33.32	80.0	-12.40	N/A	5.67(T)	-26.00(L)	**	**
37.49	90.0	-16.49	N/A	2.84(T)	-30.31(L)	**	**
41.65	100.0	-20.57	N/A	-0.00(L)	-39.03(L)	**	**

Note:
"N/A" indicates not applicable
"**" indicates not available

LL Codes:
(T) Truck load controls
(L) Lane load controls

Note:
Impact and distribution factors included in above live load shears.

Individual Vehicle Load Factor Rating Summary

Live Load		Vehicle Type	Rating Factor	Controls	Capacity (Ton)	Location Span	(ft)	Percent	Impact	Lane
HS 20-44	Inventory	Lane	3.422	Service - Steel	123.18	1	20.83	50.0	As Requested	As Requested
	Operating	Lane	5.714	Service - Steel	205.72	1	20.83	50.0	As Requested	As Requested
HS 20-44	Inventory	Axle Load	2.376	Service - Steel	85.55	1	20.83	50.0	As Requested	As Requested
	Operating	Axle Load	3.969	Service - Steel	142.87	1	20.83	50.0	As Requested	As Requested

Note:
"N/A" indicates not applicable
"**" indicates not available

Reactions
Live Load HS 20-44

Support	Stage 1 DL (kip)	Stage 2 DL (kip)	+(LL+I) (kip)	-(LL+I) (kip)	Reaction +IF (%)	Reaction -IF (%)
1	20.84	N/A	58.49(T)	0.00(L)	30.000	0.000
2	20.82	N/A	58.49(T)	0.00(L)	30.000	0.000

Note:
"N/A" indicates not applicable
"**" indicates not available

LL Codes:
(T) Truck load controls
(L) Lane load controls

Note:
Impact and distribution factors included in above live load reactions.

Moments
Live Load HS 20-44

Span 1

Location (ft)	Percent	Stage 1 DL (kip-ft)	Stage 2 DL (kip-ft)	+(LL+I) (kip-ft)	-(LL+I) (kip-ft)	+Impact Factor (%)	-Impact Factor (%)
0.00	0.0	-0.00	N/A	-0.00(L)	-0.00(L)	**	**
4.17	10.0	77.18	N/A	179.66(T)	0.00(L)	**	**
8.33	20.0	137.36	N/A	306.16(T)	0.00(L)	**	**
12.50	30.0	180.54	N/A	379.49(T)	0.00(L)	**	**
16.66	40.0	206.71	N/A	419.53(T)	0.00(L)	**	**
20.07	48.2	215.48	N/A	420.86(T)	0.00(L)	**	**
20.83	50.0	215.77	N/A	416.32(T)	0.00(L)	**	**
21.12	50.7	215.72	N/A	418.28(T)	0.00(L)	**	**
24.99	60.0	206.65	N/A	419.53(T)	0.00(L)	**	**
29.16	70.0	180.49	N/A	379.49(T)	0.00(L)	**	**
33.32	80.0	137.33	N/A	306.16(T)	0.00(L)	**	**
37.49	90.0	77.17	N/A	179.66(T)	0.00(L)	**	**
41.65	100.0	0.00	N/A	0.00(L)	0.00(L)	**	**

Note:
"N/A" indicates not applicable
"**" indicates not available

LL Codes:
(T) Truck load controls
(L) Lane load controls

Note:
Impact and distribution factors included in above live load moments.

Shears
Live Load HS 20-44

Span 1

Location (ft)	Percent	Stage 1 DL (kip)	Stage 2 DL (kip)	+(LL+I) (kip)	-(LL+I) (kip)	+Impact Factor (%)	-Impact Factor (%)
0.00	0.0	20.57	N/A	54.65(T)	-0.00(L)	**	**
4.17	10.0	16.49	N/A	43.14(T)	-2.84(T)	**	**
8.33	20.0	12.41	N/A	36.75(T)	-5.67(T)	**	**
12.50	30.0	8.33	N/A	30.37(T)	-8.51(T)	**	**
16.66	40.0	4.24	N/A	24.50(T)	-13.16(T)	**	**
20.07	48.2	0.90	N/A	19.86(T)	-17.80(T)	**	**
20.83	50.0	0.00	N/A	18.83(T)	-18.83(T)	**	**
21.12	50.7	-0.28	N/A	18.43(T)	-19.23(T)	**	**
24.99	60.0	-4.24	N/A	13.16(T)	-24.50(T)	**	**
29.16	70.0	-8.32	N/A	8.51(T)	-30.37(T)	**	**
33.32	80.0	-12.40	N/A	5.67(T)	-36.75(T)	**	**
37.49	90.0	-16.49	N/A	2.84(T)	-43.14(T)	**	**
41.65	100.0	-20.57	N/A	-0.00(L)	-54.65(T)	**	**

Note:
"N/A" indicates not applicable
"**" indicates not available

LL Codes:
(T) Truck load controls
(L) Lane load controls

Note:
Impact and distribution factors included in above live load shears.

Cross Section Properties topic is not available for the specified analysis engine!

Report by Action: ☑ **Flexure** ☑ **Shear** ☑ **Overload** ☑ **Critical**

Detailed Rating Results
H 20-44
Axle Load
Impact: As Requested
Lane: As Requested

Span 1

Location (ft)	Percent	Limit State	Units	Capacity	DL	LL	Inventory Rating Factor	Inventory Load Rating (Ton)	Operating Rating Factor	Operating Load Rating (Ton)
0.00	0.0	Flexure	KIP-FT	3072.72	0.00	0.00	99.000	1980.00	99.000	1980.00
0.00	**0.0**	**Shear**	**KIPS**	**386.05**	**20.57**	**38.21**	**4.332**	**86.63**	**7.234**	**144.67**
0.00	0.0	Overload	KSI	-33.00	-0.00	-0.00	99.000	1980.00	99.000	1980.00
4.17	10.0	Flexure	KIP-FT	3072.72	77.18	122.97	11.133	222.67	18.593	371.86
4.17	**10.0**	**Shear**	**KIPS**	**386.05**	**16.49**	**29.53**	**5.688**	**113.76**	**9.499**	**189.98**
4.17	10.0	Overload	KSI	33.00	1.96	1.93	9.141	182.82	15.265	305.31
8.33	20.0	Flexure	KIP-FT	3072.72	137.36	216.41	6.160	123.20	10.287	205.74
8.33	20.0	Shear	KIPS	386.05	12.41	25.98	6.558	131.17	10.953	219.05
8.33	**20.0**	**Overload**	**KSI**	**33.00**	**3.49**	**3.39**	**4.924**	**98.48**	**8.223**	**164.46**
12.50	30.0	Flexure	KIP-FT	3072.72	180.54	280.32	4.663	93.27	7.788	155.76
12.50	30.0	Shear	KIPS	386.05	8.33	22.43	7.704	154.08	12.866	257.31
12.50	**30.0**	**Overload**	**KSI**	**33.00**	**4.59**	**4.39**	**3.652**	**73.03**	**6.098**	**121.96**
16.66	40.0	Flexure	KIP-FT	3072.72	206.71	314.69	4.104	82.08	6.854	137.08
16.66	40.0	Shear	KIPS	386.05	4.24	18.89	9.279	185.59	15.496	309.93
16.66	**40.0**	**Overload**	**KSI**	**33.00**	**5.25**	**4.93**	**3.172**	**63.44**	**5.297**	**105.94**
20.83	50.0	Flexure	KIP-FT	3072.72	215.77	319.53	4.025	80.50	6.722	134.44
20.83	50.0	Shear	KIPS	386.05	0.00	15.34	11.589	231.78	19.354	387.07
20.83	**50.0**	**Overload**	**KSI**	**33.00**	**5.48**	**5.00**	**3.096**	**61.92**	**5.171**	**103.41**
24.99	60.0	Flexure	KIP-FT	3072.72	206.65	314.69	4.104	82.09	6.854	137.08
24.99	60.0	Shear	KIPS	386.05	4.24	18.89	9.279	185.59	15.497	309.93
24.99	**60.0**	**Overload**	**KSI**	**33.00**	**5.25**	**4.93**	**3.172**	**63.44**	**5.297**	**105.95**
29.16	70.0	Flexure	KIP-FT	3072.72	180.49	280.32	4.663	93.27	7.788	155.76
29.16	70.0	Shear	KIPS	386.05	8.32	22.43	7.704	154.08	12.866	257.31
29.16	**70.0**	**Overload**	**KSI**	**33.00**	**4.59**	**4.39**	**3.652**	**73.03**	**6.098**	**121.97**

33.32	80.0	Flexure	KIP-FT	3072.72	137.33	216.41	6.160	123.20	10.287	205.74
33.32	80.0	Shear	KIPS	386.05	12.40	25.98	6.559	131.17	10.953	219.06
33.32	**80.0**	**Overload**	**KSI**	**33.00**	**3.49**	**3.39**	**4.924**	**98.48**	**8.223**	**164.46**
37.49	90.0	Flexure	KIP-FT	3072.72	77.17	122.97	11.134	222.67	18.593	371.86
37.49	**90.0**	**Shear**	**KIPS**	**386.05**	**16.49**	**29.53**	**5.688**	**113.76**	**9.499**	**189.99**
37.49	90.0	Overload	KSI	33.00	1.96	1.93	9.141	182.82	15.266	305.31
41.65	100.0	Flexure	KIP-FT	3072.72	0.00	0.00	99.000	1980.00	99.000	1980.00
41.65	**100.0**	**Shear**	**KIPS**	**386.05**	**20.57**	**38.21**	**4.332**	**86.63**	**7.234**	**144.68**
41.65	100.0	Overload	KSI	-33.00	-0.00	-0.00	99.000	1980.00	99.000	1980.00

Detailed Rating Results
H 20-44
Lane
Impact: As Requested
Lane: As Requested

Span 1

Location							Inventory Rating	Inventory Load Rating	Operating Rating	Operating Load Rating
(ft)	**Percent**	**Limit State**	**Units**	**Capacity**	**DL**	**LL**	**Factor**	**(Ton)**	**Factor**	**(Ton)**
0.00	0.0	Flexure	KIP-FT	3072.72	0.00	0.00	99.000	1980.00	99.000	1980.00
0.00	**0.0**	**Shear**	**KIPS**	**386.05**	**20.57**	**39.03**	**4.240**	**84.80**	**7.081**	**141.62**
0.00	0.0	Overload	KSI	-33.00	-0.00	-0.00	99.000	1980.00	99.000	1980.00
4.17	10.0	Flexure	KIP-FT	3072.72	77.18	104.09	13.154	263.07	21.966	439.33
4.17	**10.0**	**Shear**	**KIPS**	**386.05**	**16.49**	**30.31**	**5.541**	**110.82**	**9.253**	**185.07**
4.17	10.0	Overload	KSI	33.00	1.96	1.63	10.800	215.99	18.035	360.70
8.33	20.0	Flexure	KIP-FT	3072.72	137.36	185.05	7.204	144.08	12.031	240.62
8.33	20.0	Shear	KIPS	386.05	12.41	26.00	6.554	131.08	10.946	218.91
8.33	**20.0**	**Overload**	**KSI**	**33.00**	**3.49**	**2.90**	**5.759**	**115.17**	**9.617**	**192.33**
12.50	30.0	Flexure	KIP-FT	3072.72	180.54	242.87	5.382	107.65	8.989	179.77
12.50	30.0	Shear	KIPS	386.05	8.33	21.92	7.885	157.69	13.167	263.35
12.50	**30.0**	**Overload**	**KSI**	**33.00**	**4.59**	**3.80**	**4.215**	**84.29**	**7.038**	**140.77**
16.66	40.0	Flexure	KIP-FT	3072.72	206.71	277.57	4.653	93.06	7.771	155.41
16.66	40.0	Shear	KIPS	386.05	4.24	18.08	9.695	193.89	16.190	323.80
16.66	**40.0**	**Overload**	**KSI**	**33.00**	**5.25**	**4.35**	**3.596**	**71.92**	**6.005**	**120.11**
20.83	50.0	Flexure	KIP-FT	3072.72	215.77	289.13	4.448	88.97	7.429	148.57

20.83	50.0	Shear	KIPS	386.05	0.00	14.48	12.284	245.67	20.514	410.27
20.83	**50.0**	**Overload**	**KSI**	**33.00**	**5.48**	**4.53**	**3.422**	**68.44**	**5.714**	**114.29**
24.99	60.0	Flexure	KIP-FT	3072.72	206.65	277.57	4.653	93.07	7.771	155.42
24.99	60.0	Shear	KIPS	386.05	4.24	18.08	9.695	193.89	16.190	323.80
24.99	**60.0**	**Overload**	**KSI**	**33.00**	**5.25**	**4.35**	**3.596**	**71.93**	**6.006**	**120.12**
29.16	70.0	Flexure	KIP-FT	3072.72	180.49	242.87	5.383	107.65	8.989	179.78
29.16	70.0	Shear	KIPS	386.05	8.32	21.92	7.885	157.70	13.168	263.35
29.16	**70.0**	**Overload**	**KSI**	**33.00**	**4.59**	**3.80**	**4.215**	**84.30**	**7.039**	**140.77**
33.32	80.0	Flexure	KIP-FT	3072.72	137.33	185.05	7.204	144.08	12.031	240.62
33.32	80.0	Shear	KIPS	386.05	12.40	26.00	6.554	131.09	10.946	218.91
33.32	**80.0**	**Overload**	**KSI**	**33.00**	**3.49**	**2.90**	**5.759**	**115.17**	**9.617**	**192.34**
37.49	90.0	Flexure	KIP-FT	3072.72	77.17	104.09	13.154	263.07	21.967	439.33
37.49	**90.0**	**Shear**	**KIPS**	**386.05**	**16.49**	**30.31**	**5.541**	**110.82**	**9.254**	**185.07**
37.49	90.0	Overload	KSI	33.00	1.96	1.63	10.800	215.99	18.035	360.71
41.65	100.0	Flexure	KIP-FT	3072.72	0.00	0.00	99.000	1980.00	99.000	1980.00
41.65	**100.0**	**Shear**	**KIPS**	**386.05**	**20.57**	**39.03**	**4.240**	**84.80**	**7.081**	**141.62**
41.65	100.0	Overload	KSI	-33.00	-0.00	-0.00	99.000	1980.00	99.000	1980.00

Detailed Rating Results
HS 20-44
Axle Load
Impact: As Requested
Lane: As Requested

Span 1

Location							**Inventory Rating**	**Inventory Load Rating**	**Operating Rating**	**Operating Load Rating**
(ft)	**Percent**	**Limit State**	**Units**	**Capacity**	**DL**	**LL**	**Factor**	**(Ton)**	**Factor**	**(Ton)**
0.00	0.0	Flexure	KIP-FT	3072.72	0.00	0.00	99.000	3564.00	99.000	3564.00
0.00	**0.0**	**Shear**	**KIPS**	**386.05**	**20.57**	**54.65**	**3.028**	**109.01**	**5.057**	**182.05**
0.00	0.0	Overload	KSI	-33.00	-0.00	-0.00	99.000	3564.00	99.000	3564.00
4.17	10.0	Flexure	KIP-FT	3072.72	77.18	179.66	7.621	274.35	12.727	458.16
4.17	**10.0**	**Shear**	**KIPS**	**386.05**	**16.49**	**43.14**	**3.893**	**140.16**	**6.502**	**234.08**
4.17	10.0	Overload	KSI	33.00	1.96	2.81	6.257	225.25	10.449	376.16
8.33	20.0	Flexure	KIP-FT	3072.72	137.36	306.16	4.354	156.75	7.272	261.78
8.33	20.0	Shear	KIPS	386.05	12.41	36.75	4.636	166.90	7.742	278.72
8.33	**20.0**	**Overload**	**KSI**	**33.00**	**3.49**	**4.79**	**3.481**	**125.30**	**5.812**	**209.25**

12.50	30.0	Flexure	KIP-FT	3072.72	180.54	379.49	3.445	124.01	5.753	207.09
12.50	30.0	Shear	KIPS	386.05	8.33	30.37	5.691	204.86	9.503	342.12
12.50	**30.0**	**Overload**	**KSI**	**33.00**	**4.59**	**5.94**	**2.697**	**97.10**	**4.504**	**162.16**
16.66	40.0	Flexure	KIP-FT	3072.72	206.71	419.53	3.079	110.83	5.141	185.09
16.66	40.0	Shear	KIPS	386.05	4.24	24.50	7.154	257.53	11.946	430.07
16.66	**40.0**	**Overload**	**KSI**	**33.00**	**5.25**	**6.57**	**2.379**	**85.65**	**3.973**	**143.04**
20.83	50.0	Flexure	KIP-FT	3072.72	215.77	416.32	3.089	111.21	5.159	185.73
20.83	50.0	Shear	KIPS	386.05	0.00	18.83	9.444	339.97	15.771	567.75
20.83	**50.0**	**Overload**	**KSI**	**33.00**	**5.48**	**6.52**	**2.376**	**85.55**	**3.969**	**142.87**
24.99	60.0	Flexure	KIP-FT	3072.72	206.65	419.53	3.079	110.83	5.141	185.09
24.99	60.0	Shear	KIPS	386.05	4.24	24.50	7.154	257.53	11.947	430.08
24.99	**60.0**	**Overload**	**KSI**	**33.00**	**5.25**	**6.57**	**2.379**	**85.66**	**3.974**	**143.05**
29.16	70.0	Flexure	KIP-FT	3072.72	180.49	379.49	3.445	124.01	5.753	207.10
29.16	70.0	Shear	KIPS	386.05	8.32	30.37	5.691	204.87	9.504	342.13
29.16	**70.0**	**Overload**	**KSI**	**33.00**	**4.59**	**5.94**	**2.697**	**97.11**	**4.505**	**162.17**
33.32	80.0	Flexure	KIP-FT	3072.72	137.33	306.16	4.354	156.76	7.272	261.78
33.32	80.0	Shear	KIPS	386.05	12.40	36.75	4.636	166.90	7.742	278.72
33.32	**80.0**	**Overload**	**KSI**	**33.00**	**3.49**	**4.79**	**3.481**	**125.30**	**5.813**	**209.26**
37.49	90.0	Flexure	KIP-FT	3072.72	77.17	179.66	7.621	274.35	12.727	458.16
37.49	**90.0**	**Shear**	**KIPS**	**386.05**	**16.49**	**43.14**	**3.894**	**140.17**	**6.502**	**234.08**
37.49	90.0	Overload	KSI	33.00	1.96	2.81	6.257	225.25	10.449	376.17
41.65	100.0	Flexure	KIP-FT	3072.72	0.00	0.00	99.000	3564.00	99.000	3564.00
41.65	**100.0**	**Shear**	**KIPS**	**386.05**	**20.57**	**54.65**	**3.028**	**109.01**	**5.057**	**182.05**
41.65	100.0	Overload	KSI	-33.00	-0.00	-0.00	99.000	3564.00	99.000	3564.00

Detailed Rating Results
HS 20-44
Lane
Impact: As Requested
Lane: As Requested

Span 1

Location							Inventory Rating	Inventory Load Rating	Operating Rating	Operating Load Rating
(ft)	**Percent**	**Limit State**	**Units**	**Capacity**	**DL**	**LL**	**Factor**	**(Ton)**	**Factor**	**(Ton)**
0.00	0.0	Flexure	KIP-FT	3072.72	0.00	0.00	99.000	3564.00	99.000	3564.00

0.00	**0.0**	**Shear**	**KIPS**	**386.05**	**20.57**	**39.03**	**4.240**	**152.64**	**7.081**	**254.91**
0.00	0.0	Overload	KSI	-33.00	-0.00	-0.00	99.000	3564.00	99.000	3564.00
4.17	10.0	Flexure	KIP-FT	3072.72	77.18	104.09	13.154	473.53	21.966	790.79
4.17	**10.0**	**Shear**	**KIPS**	**386.05**	**16.49**	**30.31**	**5.541**	**199.48**	**9.253**	**333.12**
4.17	10.0	Overload	KSI	33.00	1.96	1.63	10.800	388.78	18.035	649.27
8.33	20.0	Flexure	KIP-FT	3072.72	137.36	185.05	7.204	259.35	12.031	433.11
8.33	20.0	Shear	KIPS	386.05	12.41	26.00	6.554	235.95	10.946	394.04
8.33	**20.0**	**Overload**	**KSI**	**33.00**	**3.49**	**2.90**	**5.759**	**207.31**	**9.617**	**346.20**
12.50	30.0	Flexure	KIP-FT	3072.72	180.54	242.87	5.382	193.77	8.989	323.59
12.50	30.0	Shear	KIPS	386.05	8.33	21.92	7.885	283.85	13.167	474.03
12.50	**30.0**	**Overload**	**KSI**	**33.00**	**4.59**	**3.80**	**4.215**	**151.73**	**7.038**	**253.38**
16.66	40.0	Flexure	KIP-FT	3072.72	206.71	277.57	4.653	167.51	7.771	279.75
16.66	40.0	Shear	KIPS	386.05	4.24	18.08	9.695	349.00	16.190	582.84
16.66	**40.0**	**Overload**	**KSI**	**33.00**	**5.25**	**4.35**	**3.596**	**129.46**	**6.005**	**216.20**
20.83	50.0	Flexure	KIP-FT	3072.72	215.77	289.13	4.448	160.14	7.429	267.43
20.83	50.0	Shear	KIPS	386.05	0.00	14.48	12.284	442.21	20.514	738.49
20.83	**50.0**	**Overload**	**KSI**	**33.00**	**5.48**	**4.53**	**3.422**	**123.18**	**5.714**	**205.72**
24.99	60.0	Flexure	KIP-FT	3072.72	206.65	277.57	4.653	167.52	7.771	279.75
24.99	60.0	Shear	KIPS	386.05	4.24	18.08	9.695	349.01	16.190	582.85
24.99	**60.0**	**Overload**	**KSI**	**33.00**	**5.25**	**4.35**	**3.596**	**129.47**	**6.006**	**216.21**
29.16	70.0	Flexure	KIP-FT	3072.72	180.49	242.87	5.383	193.77	8.989	323.60
29.16	70.0	Shear	KIPS	386.05	8.32	21.92	7.885	283.85	13.168	474.03
29.16	**70.0**	**Overload**	**KSI**	**33.00**	**4.59**	**3.80**	**4.215**	**151.73**	**7.039**	**253.39**
33.32	80.0	Flexure	KIP-FT	3072.72	137.33	185.05	7.204	259.35	12.031	433.12
33.32	80.0	Shear	KIPS	386.05	12.40	26.00	6.554	235.96	10.946	394.05
33.32	**80.0**	**Overload**	**KSI**	**33.00**	**3.49**	**2.90**	**5.759**	**207.31**	**9.617**	**346.21**
37.49	90.0	Flexure	KIP-FT	3072.72	77.17	104.09	13.154	473.53	21.967	790.80
37.49	**90.0**	**Shear**	**KIPS**	**386.05**	**16.49**	**30.31**	**5.541**	**199.48**	**9.254**	**333.13**
37.49	90.0	Overload	KSI	33.00	1.96	1.63	10.800	388.79	18.035	649.28
41.65	100.0	Flexure	KIP-FT	3072.72	0.00	0.00	99.000	3564.00	99.000	3564.00
41.65	**100.0**	**Shear**	**KIPS**	**386.05**	**20.57**	**39.03**	**4.240**	**152.64**	**7.081**	**254.91**
41.65	100.0	Overload	KSI	-33.00	-0.00	-0.00	99.000	3564.00	99.000	3564.00

Bridge Name: 1031529
NBI Structure ID: 1031529
Bridge ID: 1031529

Analyzed By: BrR
Analyze Date: Tuesday, April 15, 2014 10:54:17
Analysis Engine: AASHTO LFR Engine Version 6.5.0.3001
Analysis Preference Setting: None

Report By: brr
Report Date: Tuesday, April 15, 2014 11:13:07

Structure Definition Name: Span 3 (SB)
Member Name: G7 (S15 plan designation)
Member Alternative Name: 5% Section Loss

Load Factor Rating Summary

Live Load		Rating Factor	Controls	Capacity (Ton)	Span	Location (ft)	Percent	Impact	Lane
H 20-44	Inventory	2.959	Service - Steel	59.18	1	20.82	50.0	As Requested	As Requested
	Operating	4.942	Service - Steel	98.84	1	20.82	50.0	As Requested	As Requested
HS 20-44	Inventory	2.271	Service - Steel	81.76	1	20.82	50.0	As Requested	As Requested
	Operating	3.793	Service - Steel	136.55	1	20.82	50.0	As Requested	As Requested

Note:
"N/A" indicates not applicable
"**" indicates not available

Individual Vehicle Load Factor Rating Summary

Live Load		Vehicle Type	Rating Factor	Controls	Capacity (Ton)	Location Span	(ft)	Percent	Impact	Lane
H 20-44	Inventory	Lane	3.270	Service - Steel	65.41	1	20.82	50.0	As Requested	As Requested
	Operating	Lane	5.462	Service - Steel	109.23	1	20.82	50.0	As Requested	As Requested
H 20-44	Inventory	Axle Load	2.959	Service - Steel	59.18	1	20.82	50.0	As Requested	As Requested
	Operating	Axle Load	4.942	Service - Steel	98.84	1	20.82	50.0	As Requested	As Requested

Note:
"N/A" indicates not applicable
"**" indicates not available

Reactions
Live Load H 20-44

Support	Stage 1 DL (kip)	Stage 2 DL (kip)	+(LL+I) (kip)	-(LL+I) (kip)	Reaction +IF (%)	Reaction -IF (%)
1	30.34	N/A	23.03(L)	0.00(L)	30.000	0.000
2	30.34	N/A	23.03(L)	0.00(L)	30.000	0.000

Note:
"N/A" indicates not applicable
"**" indicates not available

LL Codes:
(T) Truck load controls
(L) Lane load controls

Note:
Impact and distribution factors included in above live load reactions.

Moments
Live Load H 20-44

Span 1

Location (ft)	Percent	Stage 1 DL (kip-ft)	Stage 2 DL (kip-ft)	+(LL+I) (kip-ft)	-(LL+I) (kip-ft)	+Impact Factor (%)	-Impact Factor (%)
0.00	0.0	-0.00	N/A	-0.00(L)	-0.00(L)	**	**
4.17	10.0	113.27	N/A	114.37(T)	0.00(L)	**	**
8.33	20.0	201.44	N/A	201.27(T)	0.00(L)	**	**
12.50	30.0	264.51	N/A	260.70(T)	0.00(L)	**	**
16.66	40.0	302.49	N/A	292.67(T)	0.00(L)	**	**
20.82	50.0	315.37	N/A	297.17(T)	0.00(L)	**	**
21.12	50.7	315.33	N/A	297.74(T)	0.00(L)	**	**
24.99	60.0	302.53	N/A	292.67(T)	0.00(L)	**	**
29.16	70.0	264.54	N/A	260.70(T)	0.00(L)	**	**
33.32	80.0	201.46	N/A	201.27(T)	0.00(L)	**	**
37.48	90.0	113.28	N/A	114.37(T)	0.00(L)	**	**
41.65	100.0	-0.00	N/A	0.00(L)	0.00(L)	**	**

Note:
"N/A" indicates not applicable
"**" indicates not available

LL Codes:
(T) Truck load controls
(L) Lane load controls

Note:
Impact and distribution factors included in above live load moments.

Shears
Live Load H 20-44

Span 1

Location (ft)	Percent	Stage 1 DL (kip)	Stage 2 DL (kip)	+(LL+I) (kip)	-(LL+I) (kip)	+Impact Factor (%)	-Impact Factor (%)
0.00	0.0	30.21	N/A	26.21(L)	-0.00(L)	**	**
4.17	10.0	24.18	N/A	28.19(L)	-2.64(T)	**	**
8.33	20.0	18.16	N/A	24.18(L)	-5.28(T)	**	**
12.50	30.0	12.13	N/A	20.86(T)	-7.91(T)	**	**
16.66	40.0	6.10	N/A	17.57(T)	-10.97(T)	**	**
20.82	50.0	0.08	N/A	14.27(T)	-14.27(T)	**	**
21.12	50.7	-0.34	N/A	14.04(T)	-14.50(T)	**	**
24.99	60.0	-6.11	N/A	10.97(T)	-17.57(T)	**	**
29.16	70.0	-12.13	N/A	7.91(T)	-20.86(T)	**	**
33.32	80.0	-18.16	N/A	5.28(T)	-24.18(L)	**	**
37.48	90.0	-24.18	N/A	2.64(T)	-28.19(L)	**	**
41.65	100.0	-30.21	N/A	-0.00(L)	-26.21(L)	**	**

Note:
"N/A" indicates not applicable
"**" indicates not available

LL Codes:
(T) Truck load controls
(L) Lane load controls

Note:
Impact and distribution factors included in above live load shears.

Individual Vehicle Load Factor Rating Summary

Live Load		Vehicle Type	Rating Factor	Controls	Capacity (Ton)	Location Span	(ft)	Percent	Impact	Lane
HS 20-44	Inventory	Lane	3.270	Service - Steel	117.73	1	20.82	50.0	As Requested	As Requested
	Operating	Lane	5.462	Service - Steel	196.61	1	20.82	50.0	As Requested	As Requested
HS 20-44	Inventory	Axle Load	2.271	Service - Steel	81.76	1	20.82	50.0	As Requested	As Requested
	Operating	Axle Load	3.793	Service - Steel	136.55	1	20.82	50.0	As Requested	As Requested

Note:
"N/A" indicates not applicable
"**" indicates not available

Reactions
Live Load HS 20-44

Support	Stage 1 DL (kip)	Stage 2 DL (kip)	+(LL+I) (kip)	-(LL+I) (kip)	Reaction +IF (%)	Reaction -IF (%)
1	30.34	N/A	32.72(T)	0.00(L)	30.000	0.000
2	30.34	N/A	32.72(T)	0.00(L)	30.000	0.000

Note:
"N/A" indicates not applicable
"**" indicates not available

LL Codes:
(T) Truck load controls
(L) Lane load controls

Note:
Impact and distribution factors included in above live load reactions.

Moments
Live Load HS 20-44

Span 1

Location (ft)	Percent	Stage 1 DL (kip-ft)	Stage 2 DL (kip-ft)	+(LL+I) (kip-ft)	-(LL+I) (kip-ft)	+Impact Factor (%)	-Impact Factor (%)
0.00	0.0	-0.00	N/A	-0.00(L)	-0.00(L)	**	**
4.17	10.0	113.27	N/A	167.08(T)	0.00(L)	**	**
8.33	20.0	201.44	N/A	284.73(T)	0.00(L)	**	**
12.50	30.0	264.51	N/A	352.93(T)	0.00(L)	**	**
16.66	40.0	302.49	N/A	390.16(T)	0.00(L)	**	**
20.82	50.0	315.37	N/A	387.18(T)	0.00(L)	**	**
21.12	50.7	315.33	N/A	389.00(T)	0.00(L)	**	**
24.99	60.0	302.53	N/A	390.16(T)	0.00(L)	**	**
29.16	70.0	264.54	N/A	352.93(T)	0.00(L)	**	**
33.32	80.0	201.46	N/A	284.73(T)	0.00(L)	**	**
37.48	90.0	113.28	N/A	167.08(T)	0.00(L)	**	**
41.65	100.0	-0.00	N/A	0.00(L)	0.00(L)	**	**

Note:
"N/A" indicates not applicable
"**" indicates not available

LL Codes:
(T) Truck load controls
(L) Lane load controls

Note:
Impact and distribution factors included in above live load moments.

Shears
Live Load HS 20-44

Span 1

Location (ft)	Percent	Stage 1 DL (kip)	Stage 2 DL (kip)	+(LL+I) (kip)	-(LL+I) (kip)	+Impact Factor (%)	-Impact Factor (%)
0.00	0.0	30.21	N/A	45.34(T)	-0.00(L)	**	**
4.17	10.0	24.18	N/A	40.12(T)	-2.64(T)	**	**
8.33	20.0	18.16	N/A	34.18(T)	-5.28(T)	**	**
12.50	30.0	12.13	N/A	28.25(T)	-7.91(T)	**	**
16.66	40.0	6.10	N/A	22.79(T)	-12.24(T)	**	**
20.82	50.0	0.08	N/A	17.51(T)	-17.51(T)	**	**
21.12	50.7	-0.34	N/A	17.14(T)	-17.88(T)	**	**
24.99	60.0	-6.11	N/A	12.24(T)	-22.79(T)	**	**
29.16	70.0	-12.13	N/A	7.91(T)	-28.25(T)	**	**
33.32	80.0	-18.16	N/A	5.28(T)	-34.18(T)	**	**
37.48	90.0	-24.18	N/A	2.64(T)	-40.12(T)	**	**
41.65	100.0	-30.21	N/A	-0.00(L)	-45.34(T)	**	**

Note:
"N/A" indicates not applicable
"**" indicates not available

LL Codes:
(T) Truck load controls
(L) Lane load controls

Note:
Impact and distribution factors included in above live load shears.

Cross Section Properties topic is not available for the specified analysis engine!

Report by Action: ☑ **Flexure** ☑ **Shear** ☑ **Overload** ☑ **Critical**

Detailed Rating Results
H 20-44
Axle Load
Impact: As Requested
Lane: As Requested

Span 1

Location (ft)	Percent	Limit State	Units	Capacity	DL	LL	Inventory Rating Factor	Inventory Load Rating (Ton)	Operating Rating Factor	Operating Load Rating (Ton)
0.00	0.0	Flexure	KIP-FT	3018.41	0.00	0.00	99.000	1980.00	99.000	1980.00
0.00	**0.0**	**Shear**	**KIPS**	**386.05**	**30.21**	**26.19**	**6.099**	**121.99**	**10.186**	**203.72**
0.00	0.0	Overload	KSI	-33.00	-0.00	-0.00	99.000	1980.00	99.000	1980.00
4.17	10.0	Flexure	KIP-FT	3018.41	113.27	114.37	11.564	231.28	19.312	386.23
4.17	**10.0**	**Shear**	**KIPS**	**386.05**	**24.18**	**27.46**	**5.949**	**118.97**	**9.934**	**198.68**
4.17	10.0	Overload	KSI	33.00	2.88	1.82	9.382	187.64	15.668	313.36
8.33	20.0	Flexure	KIP-FT	3018.41	201.44	201.27	6.309	126.17	10.535	210.71
8.33	20.0	Shear	KIPS	386.05	18.16	24.16	6.910	138.19	11.539	230.78
8.33	**20.0**	**Overload**	**KSI**	**33.00**	**5.12**	**3.20**	**4.912**	**98.23**	**8.202**	**164.05**
12.50	30.0	Flexure	KIP-FT	3018.41	264.51	260.70	4.726	94.51	7.892	157.83
12.50	30.0	Shear	KIPS	386.05	12.13	20.86	8.175	163.49	13.652	273.03
12.50	**30.0**	**Overload**	**KSI**	**33.00**	**6.72**	**4.14**	**3.560**	**71.20**	**5.945**	**118.91**
16.66	40.0	Flexure	KIP-FT	3018.41	302.49	292.67	4.132	82.63	6.900	138.00
16.66	40.0	Shear	KIPS	386.05	6.10	17.57	9.914	198.29	16.557	331.14
16.66	**40.0**	**Overload**	**KSI**	**33.00**	**7.69**	**4.65**	**3.047**	**60.94**	**5.088**	**101.77**
20.82	50.0	Flexure	KIP-FT	3018.41	315.37	297.17	4.043	80.86	6.752	135.04
20.82	50.0	Shear	KIPS	386.05	0.08	14.27	12.458	249.16	20.805	416.10
20.82	**50.0**	**Overload**	**KSI**	**33.00**	**8.02**	**4.72**	**2.959**	**59.18**	**4.942**	**98.84**
24.99	60.0	Flexure	KIP-FT	3018.41	302.53	292.67	4.132	82.63	6.900	138.00
24.99	60.0	Shear	KIPS	386.05	6.11	17.57	9.914	198.29	16.557	331.14
24.99	**60.0**	**Overload**	**KSI**	**33.00**	**7.69**	**4.65**	**3.047**	**60.94**	**5.088**	**101.76**
29.16	70.0	Flexure	KIP-FT	3018.41	264.54	260.70	4.725	94.51	7.892	157.83
29.16	70.0	Shear	KIPS	386.05	12.13	20.86	8.175	163.49	13.651	273.03
29.16	**70.0**	**Overload**	**KSI**	**33.00**	**6.72**	**4.14**	**3.560**	**71.20**	**5.945**	**118.90**

33.32	80.0	Flexure	KIP-FT	3018.41	201.46	201.27	6.309	126.17	10.535	210.71
33.32	80.0	Shear	KIPS	386.05	18.16	24.16	6.910	138.19	11.539	230.78
33.32	**80.0**	**Overload**	**KSI**	**33.00**	**5.12**	**3.20**	**4.911**	**98.23**	**8.202**	**164.04**
37.48	90.0	Flexure	KIP-FT	3018.41	113.28	114.37	11.564	231.28	19.312	386.23
37.48	**90.0**	**Shear**	**KIPS**	**386.05**	**24.18**	**27.46**	**5.949**	**118.97**	**9.934**	**198.68**
37.48	90.0	Overload	KSI	33.00	2.88	1.82	9.382	187.64	15.668	313.36
41.65	100.0	Flexure	KIP-FT	3018.41	0.00	0.00	99.000	1980.00	99.000	1980.00
41.65	**100.0**	**Shear**	**KIPS**	**386.05**	**30.21**	**26.19**	**6.099**	**121.99**	**10.186**	**203.72**
41.65	100.0	Overload	KSI	-33.00	-0.00	-0.00	99.000	1980.00	99.000	1980.00

Detailed Rating Results
H 20-44
Lane
Impact: As Requested
Lane: As Requested

Span 1

Location							Inventory Rating	Inventory Load Rating	Operating Rating	Operating Load Rating
(ft)	**Percent**	**Limit State**	**Units**	**Capacity**	**DL**	**LL**	**Factor**	**(Ton)**	**Factor**	**(Ton)**
0.00	0.0	Flexure	KIP-FT	3018.41	0.00	0.00	99.000	1980.00	99.000	1980.00
0.00	**0.0**	**Shear**	**KIPS**	**386.05**	**30.21**	**26.21**	**6.094**	**121.87**	**10.177**	**203.53**
0.00	0.0	Overload	KSI	-33.00	-0.00	-0.00	99.000	1980.00	99.000	1980.00
4.17	10.0	Flexure	KIP-FT	3018.41	113.27	96.80	13.662	273.24	22.816	456.31
4.17	**10.0**	**Shear**	**KIPS**	**386.05**	**24.18**	**28.19**	**5.795**	**115.89**	**9.677**	**193.54**
4.17	10.0	Overload	KSI	33.00	2.88	1.54	11.084	221.69	18.511	370.22
8.33	20.0	Flexure	KIP-FT	3018.41	201.44	172.09	7.378	147.56	12.321	246.43
8.33	20.0	Shear	KIPS	386.05	18.16	24.18	6.905	138.10	11.532	230.63
8.33	**20.0**	**Overload**	**KSI**	**33.00**	**5.12**	**2.73**	**5.744**	**114.88**	**9.593**	**191.85**
12.50	30.0	Flexure	KIP-FT	3018.41	264.51	225.87	5.454	109.08	9.108	182.17
12.50	30.0	Shear	KIPS	386.05	12.13	20.39	8.366	167.33	13.972	279.44
12.50	**30.0**	**Overload**	**KSI**	**33.00**	**6.72**	**3.59**	**4.109**	**82.18**	**6.862**	**137.24**
16.66	40.0	Flexure	KIP-FT	3018.41	302.49	258.14	4.684	93.69	7.823	156.46
16.66	40.0	Shear	KIPS	386.05	6.10	16.81	10.358	207.16	17.298	345.96
16.66	**40.0**	**Overload**	**KSI**	**33.00**	**7.69**	**4.10**	**3.454**	**69.09**	**5.769**	**115.38**
20.82	50.0	Flexure	KIP-FT	3018.41	315.37	268.89	4.468	89.37	7.462	149.24

20.82	50.0	Shear	KIPS	386.05	0.08	13.46	13.205	264.10	22.052	441.04
20.82	**50.0**	**Overload**	**KSI**	**33.00**	**8.02**	**4.27**	**3.270**	**65.41**	**5.462**	**109.23**
24.99	60.0	Flexure	KIP-FT	3018.41	302.53	258.14	4.684	93.68	7.823	156.45
24.99	60.0	Shear	KIPS	386.05	6.11	16.81	10.358	207.16	17.298	345.96
24.99	**60.0**	**Overload**	**KSI**	**33.00**	**7.69**	**4.10**	**3.454**	**69.09**	**5.769**	**115.37**
29.16	70.0	Flexure	KIP-FT	3018.41	264.54	225.87	5.454	109.08	9.108	182.17
29.16	70.0	Shear	KIPS	386.05	12.13	20.39	8.366	167.33	13.972	279.43
29.16	**70.0**	**Overload**	**KSI**	**33.00**	**6.72**	**3.59**	**4.109**	**82.18**	**6.862**	**137.24**
33.32	80.0	Flexure	KIP-FT	3018.41	201.46	172.09	7.378	147.56	12.321	246.43
33.32	80.0	Shear	KIPS	386.05	18.16	24.18	6.905	138.10	11.532	230.63
33.32	**80.0**	**Overload**	**KSI**	**33.00**	**5.12**	**2.73**	**5.744**	**114.88**	**9.593**	**191.85**
37.48	90.0	Flexure	KIP-FT	3018.41	113.28	96.80	13.662	273.24	22.815	456.31
37.48	**90.0**	**Shear**	**KIPS**	**386.05**	**24.18**	**28.19**	**5.795**	**115.89**	**9.677**	**193.54**
37.48	90.0	Overload	KSI	33.00	2.88	1.54	11.084	221.69	18.511	370.22
41.65	100.0	Flexure	KIP-FT	3018.41	0.00	0.00	99.000	1980.00	99.000	1980.00
41.65	**100.0**	**Shear**	**KIPS**	**386.05**	**30.21**	**26.21**	**6.094**	**121.87**	**10.176**	**203.53**
41.65	100.0	Overload	KSI	-33.00	-0.00	-0.00	99.000	1980.00	99.000	1980.00

Detailed Rating Results
HS 20-44
Axle Load
Impact: As Requested
Lane: As Requested

Span 1

Location							Inventory Rating	Inventory Load Rating	Operating Rating	Operating Load Rating
(ft)	**Percent**	**Limit State**	**Units**	**Capacity**	**DL**	**LL**	**Factor**	**(Ton)**	**Factor**	**(Ton)**
0.00	0.0	Flexure	KIP-FT	3018.41	0.00	0.00	99.000	3564.00	99.000	3564.00
0.00	**0.0**	**Shear**	**KIPS**	**386.05**	**30.21**	**45.34**	**3.523**	**126.83**	**5.884**	**211.81**
0.00	0.0	Overload	KSI	-33.00	-0.00	-0.00	99.000	3564.00	99.000	3564.00
4.17	10.0	Flexure	KIP-FT	3018.41	113.27	167.08	7.915	284.95	13.219	475.87
4.17	**10.0**	**Shear**	**KIPS**	**386.05**	**24.18**	**40.12**	**4.072**	**146.58**	**6.800**	**244.79**
4.17	10.0	Overload	KSI	33.00	2.88	2.65	6.422	231.19	10.725	386.09
8.33	20.0	Flexure	KIP-FT	3018.41	201.44	284.73	4.459	160.54	7.447	268.10
8.33	20.0	Shear	KIPS	386.05	18.16	34.18	4.884	175.83	8.157	293.64
8.33	**20.0**	**Overload**	**KSI**	**33.00**	**5.12**	**4.52**	**3.472**	**124.99**	**5.798**	**208.73**

12.50	30.0	Flexure	KIP-FT	3018.41	264.51	352.93	3.491	125.66	5.829	209.86
12.50	30.0	Shear	KIPS	386.05	12.13	28.25	6.038	217.38	10.084	363.02
12.50	**30.0**	**Overload**	**KSI**	**33.00**	**6.72**	**5.61**	**2.630**	**94.67**	**4.392**	**158.10**
16.66	40.0	Flexure	KIP-FT	3018.41	302.49	390.16	3.099	111.57	5.176	186.33
16.66	40.0	Shear	KIPS	386.05	6.10	22.79	7.643	275.15	12.764	459.50
16.66	**40.0**	**Overload**	**KSI**	**33.00**	**7.69**	**6.20**	**2.286**	**82.28**	**3.817**	**137.41**
20.82	50.0	Flexure	KIP-FT	3018.41	315.37	387.18	3.103	111.71	5.182	186.56
20.82	50.0	Shear	KIPS	386.05	0.08	17.51	10.152	365.46	16.953	610.32
20.82	**50.0**	**Overload**	**KSI**	**33.00**	**8.02**	**6.15**	**2.271**	**81.76**	**3.793**	**136.55**
24.99	60.0	Flexure	KIP-FT	3018.41	302.53	390.16	3.099	111.57	5.176	186.32
24.99	60.0	Shear	KIPS	386.05	6.11	22.79	7.643	275.15	12.764	459.50
24.99	**60.0**	**Overload**	**KSI**	**33.00**	**7.69**	**6.20**	**2.285**	**82.28**	**3.817**	**137.40**
29.16	70.0	Flexure	KIP-FT	3018.41	264.54	352.93	3.491	125.66	5.829	209.85
29.16	70.0	Shear	KIPS	386.05	12.13	28.25	6.038	217.38	10.084	363.02
29.16	**70.0**	**Overload**	**KSI**	**33.00**	**6.72**	**5.61**	**2.630**	**94.67**	**4.391**	**158.09**
33.32	80.0	Flexure	KIP-FT	3018.41	201.46	284.73	4.459	160.54	7.447	268.10
33.32	80.0	Shear	KIPS	386.05	18.16	34.18	4.884	175.83	8.157	293.64
33.32	**80.0**	**Overload**	**KSI**	**33.00**	**5.12**	**4.52**	**3.472**	**124.98**	**5.798**	**208.72**
37.48	90.0	Flexure	KIP-FT	3018.41	113.28	167.08	7.915	284.95	13.218	475.87
37.48	**90.0**	**Shear**	**KIPS**	**386.05**	**24.18**	**40.12**	**4.072**	**146.58**	**6.800**	**244.79**
37.48	90.0	Overload	KSI	33.00	2.88	2.65	6.422	231.19	10.725	386.08
41.65	100.0	Flexure	KIP-FT	3018.41	0.00	0.00	99.000	3564.00	99.000	3564.00
41.65	**100.0**	**Shear**	**KIPS**	**386.05**	**30.21**	**45.34**	**3.523**	**126.83**	**5.884**	**211.81**
41.65	100.0	Overload	KSI	-33.00	-0.00	-0.00	99.000	3564.00	99.000	3564.00

Detailed Rating Results
HS 20-44
Lane
Impact: As Requested
Lane: As Requested

Span 1

Location							Inventory Rating	Inventory Load Rating	Operating Rating	Operating Load Rating
(ft)	**Percent**	**Limit State**	**Units**	**Capacity**	**DL**	**LL**	**Factor**	**(Ton)**	**Factor**	**(Ton)**
0.00	0.0	Flexure	KIP-FT	3018.41	0.00	0.00	99.000	3564.00	99.000	3564.00

0.00	**0.0**	**Shear**	**KIPS**	**386.05**	**30.21**	**26.21**	**6.094**	**219.37**	**10.177**	**366.36**
0.00	0.0	Overload	KSI	-33.00	-0.00	-0.00	99.000	3564.00	99.000	3564.00
4.17	10.0	Flexure	KIP-FT	3018.41	113.27	96.80	13.662	491.83	22.816	821.36
4.17	**10.0**	**Shear**	**KIPS**	**386.05**	**24.18**	**28.19**	**5.795**	**208.61**	**9.677**	**348.37**
4.17	10.0	Overload	KSI	33.00	2.88	1.54	11.084	399.04	18.511	666.39
8.33	20.0	Flexure	KIP-FT	3018.41	201.44	172.09	7.378	265.61	12.321	443.57
8.33	20.0	Shear	KIPS	386.05	18.16	24.18	6.905	248.59	11.532	415.14
8.33	**20.0**	**Overload**	**KSI**	**33.00**	**5.12**	**2.73**	**5.744**	**206.79**	**9.593**	**345.34**
12.50	30.0	Flexure	KIP-FT	3018.41	264.51	225.87	5.454	196.35	9.108	327.91
12.50	30.0	Shear	KIPS	386.05	12.13	20.39	8.366	301.19	13.972	502.99
12.50	**30.0**	**Overload**	**KSI**	**33.00**	**6.72**	**3.59**	**4.109**	**147.92**	**6.862**	**247.03**
16.66	40.0	Flexure	KIP-FT	3018.41	302.49	258.14	4.684	168.64	7.823	281.62
16.66	40.0	Shear	KIPS	386.05	6.10	16.81	10.358	372.89	17.298	622.72
16.66	**40.0**	**Overload**	**KSI**	**33.00**	**7.69**	**4.10**	**3.454**	**124.36**	**5.769**	**207.68**
20.82	50.0	Flexure	KIP-FT	3018.41	315.37	268.89	4.468	160.86	7.462	268.63
20.82	50.0	Shear	KIPS	386.05	0.08	13.46	13.205	475.37	22.052	793.87
20.82	**50.0**	**Overload**	**KSI**	**33.00**	**8.02**	**4.27**	**3.270**	**117.73**	**5.462**	**196.61**
24.99	60.0	Flexure	KIP-FT	3018.41	302.53	258.14	4.684	168.63	7.823	281.62
24.99	60.0	Shear	KIPS	386.05	6.11	16.81	10.358	372.89	17.298	622.72
24.99	**60.0**	**Overload**	**KSI**	**33.00**	**7.69**	**4.10**	**3.454**	**124.35**	**5.769**	**207.67**
29.16	70.0	Flexure	KIP-FT	3018.41	264.54	225.87	5.454	196.35	9.108	327.90
29.16	70.0	Shear	KIPS	386.05	12.13	20.39	8.366	301.19	13.972	502.98
29.16	**70.0**	**Overload**	**KSI**	**33.00**	**6.72**	**3.59**	**4.109**	**147.92**	**6.862**	**247.02**
33.32	80.0	Flexure	KIP-FT	3018.41	201.46	172.09	7.378	265.61	12.321	443.57
33.32	80.0	Shear	KIPS	386.05	18.16	24.18	6.905	248.59	11.532	415.14
33.32	**80.0**	**Overload**	**KSI**	**33.00**	**5.12**	**2.73**	**5.744**	**206.79**	**9.593**	**345.33**
37.48	90.0	Flexure	KIP-FT	3018.41	113.28	96.80	13.662	491.83	22.815	821.35
37.48	**90.0**	**Shear**	**KIPS**	**386.05**	**24.18**	**28.19**	**5.795**	**208.61**	**9.677**	**348.37**
37.48	90.0	Overload	KSI	33.00	2.88	1.54	11.084	399.04	18.511	666.39
41.65	100.0	Flexure	KIP-FT	3018.41	0.00	0.00	99.000	3564.00	99.000	3564.00
41.65	**100.0**	**Shear**	**KIPS**	**386.05**	**30.21**	**26.21**	**6.094**	**219.37**	**10.176**	**366.35**
41.65	100.0	Overload	KSI	-33.00	-0.00	-0.00	99.000	3564.00	99.000	3564.00

Bridge Name: 1031529
NBI Structure ID: 1031529
Bridge ID: 1031529

Analyzed By: BrR
Analyze Date: Tuesday, April 15, 2014 10:54:17
Analysis Engine: AASHTO LFR Engine Version 6.5.0.3001
Analysis Preference Setting: None

Report By: brr
Report Date: Tuesday, April 15, 2014 11:13:07

Structure Definition Name: Span 1 (NB)
Member Name: G1 (S4 plan designation)
Member Alternative Name: 5% Section Loss

Load Factor Rating Summary

Live Load		Rating Factor	Controls	Capacity (Ton)	Location Span	Location (ft)	Location Percent	Impact	Lane
H 20-44	Inventory	2.884	Service - Steel	57.67	1	16.95	50.0	As Requested	As Requested
	Operating	4.816	Service - Steel	96.31	1	16.95	50.0	As Requested	As Requested
HS 20-44	Inventory	2.419	Service - Steel	87.08	1	13.56	40.0	As Requested	As Requested
	Operating	4.040	Service - Steel	145.43	1	13.56	40.0	As Requested	As Requested

Note:
"N/A" indicates not applicable
"**" indicates not available

Individual Vehicle Load Factor Rating Summary

Live Load		Vehicle Type	Rating Factor	Controls	Capacity (Ton)	Location Span	(ft)	Percent	Impact	Lane
H 20-44	Inventory	Lane	3.338	Service - Steel	66.75	1	16.95	50.0	As Requested	As Requested
	Operating	Lane	5.574	Service - Steel	111.48	1	16.95	50.0	As Requested	As Requested
H 20-44	Inventory	Axle Load	2.884	Service - Steel	57.67	1	16.95	50.0	As Requested	As Requested
	Operating	Axle Load	4.816	Service - Steel	96.31	1	16.95	50.0	As Requested	As Requested

Note:
"N/A" indicates not applicable
"**" indicates not available

Reactions
Live Load H 20-44

Support	Stage 1 DL (kip)	Stage 2 DL (kip)	+(LL+I) (kip)	-(LL+I) (kip)	Reaction +IF (%)	Reaction -IF (%)
1	24.27	N/A	22.16(L)	0.00(L)	30.000	0.000
2	24.28	N/A	22.16(L)	0.00(L)	30.000	0.000

Note:
"N/A" indicates not applicable
"**" indicates not available

LL Codes:
(T) Truck load controls
(L) Lane load controls

Note:
Impact and distribution factors included in above live load reactions.

Moments
Live Load H 20-44

Span 1

Location (ft)	Percent	Stage 1 DL (kip-ft)	Stage 2 DL (kip-ft)	+(LL+I) (kip-ft)	-(LL+I) (kip-ft)	+Impact Factor (%)	-Impact Factor (%)
0.00	0.0	-0.00	N/A	-0.00(L)	-0.00(L)	**	**
3.39	10.0	73.73	N/A	92.00(T)	0.00(L)	**	**
6.78	20.0	131.14	N/A	161.50(T)	0.00(L)	**	**
10.17	30.0	172.23	N/A	208.48(T)	0.00(L)	**	**
13.56	40.0	197.00	N/A	232.95(T)	0.00(L)	**	**
16.08	47.4	204.82	N/A	236.57(T)	0.00(L)	**	**
16.95	50.0	205.30	N/A	234.91(T)	0.00(L)	**	**
20.35	60.0	196.89	N/A	232.95(T)	0.00(L)	**	**
23.74	70.0	172.15	N/A	208.48(T)	0.00(L)	**	**
27.13	80.0	131.09	N/A	161.50(T)	0.00(L)	**	**
30.52	90.0	73.70	N/A	92.00(T)	0.00(L)	**	**
33.91	100.0	-0.00	N/A	0.00(L)	0.00(L)	**	**

Note:
"N/A" indicates not applicable
"**" indicates not available

LL Codes:
(T) Truck load controls
(L) Lane load controls

Note:
Impact and distribution factors included in above live load moments.

Shears
Live Load H 20-44

Span 1

Location (ft)	Percent	Stage 1 DL (kip)	Stage 2 DL (kip)	+(LL+I) (kip)	-(LL+I) (kip)	+Impact Factor (%)	-Impact Factor (%)
0.00	0.0	24.15	N/A	26.32(T)	-0.00(L)	**	**
3.39	10.0	19.34	N/A	27.13(T)	-2.66(T)	**	**
6.78	20.0	14.52	N/A	23.81(T)	-5.31(T)	**	**
10.17	30.0	9.71	N/A	20.49(T)	-7.97(T)	**	**
13.56	40.0	4.90	N/A	17.17(T)	-10.62(T)	**	**
16.08	47.4	1.33	N/A	14.72(T)	-12.99(T)	**	**
16.95	50.0	-0.08	N/A	13.86(T)	-13.86(T)	**	**
20.35	60.0	-4.89	N/A	10.62(T)	-17.17(T)	**	**
23.74	70.0	-9.70	N/A	7.97(T)	-20.49(T)	**	**
27.13	80.0	-14.52	N/A	5.31(T)	-23.81(T)	**	**
30.52	90.0	-19.33	N/A	2.66(T)	-27.13(T)	**	**
33.91	100.0	-24.14	N/A	-0.00(L)	-26.32(T)	**	**

Note:
"N/A" indicates not applicable
"**" indicates not available

LL Codes:
(T) Truck load controls
(L) Lane load controls

Note:
Impact and distribution factors included in above live load shears.

Individual Vehicle Load Factor Rating Summary

Live Load		Vehicle Type	Rating Factor	Controls	Capacity (Ton)	Location Span	(ft)	Percent	Impact	Lane
HS 20-44	Inventory	Lane	3.338	Service - Steel	120.16	1	16.95	50.0	As Requested	As Requested
	Operating	Lane	5.574	Service - Steel	200.66	1	16.95	50.0	As Requested	As Requested
HS 20-44	Inventory	Axle Load	2.419	Service - Steel	87.08	1	13.56	40.0	As Requested	As Requested
	Operating	Axle Load	4.040	Service - Steel	145.43	1	13.56	40.0	As Requested	As Requested

Note:
"N/A" indicates not applicable
"**" indicates not available

Reactions
Live Load HS 20-44

Support	Stage 1 DL (kip)	Stage 2 DL (kip)	+(LL+I) (kip)	-(LL+I) (kip)	Reaction +IF (%)	Reaction -IF (%)
1	24.27	N/A	31.39(T)	0.00(L)	30.000	0.000
2	24.28	N/A	31.39(T)	0.00(L)	30.000	0.000

Note:
"N/A" indicates not applicable
"**" indicates not available

LL Codes:
(T) Truck load controls
(L) Lane load controls

Note:
Impact and distribution factors included in above live load reactions.

Moments
Live Load HS 20-44

Span 1

Location (ft)	Percent	Stage 1 DL (kip-ft)	Stage 2 DL (kip-ft)	+(LL+I) (kip-ft)	-(LL+I) (kip-ft)	+Impact Factor (%)	-Impact Factor (%)
0.00	0.0	-0.00	N/A	-0.00(L)	-0.00(L)	**	**
3.39	10.0	73.73	N/A	126.57(T)	0.00(L)	**	**
6.78	20.0	131.14	N/A	213.79(T)	0.00(L)	**	**
10.17	30.0	172.23	N/A	266.65(T)	0.00(L)	**	**
13.56	40.0	197.00	N/A	283.50(T)	0.00(L)	**	**
16.08	47.4	204.82	N/A	280.01(T)	0.00(L)	**	**
16.95	50.0	205.30	N/A	274.15(T)	0.00(L)	**	**
20.35	60.0	196.89	N/A	283.50(T)	0.00(L)	**	**
23.74	70.0	172.15	N/A	266.65(T)	0.00(L)	**	**
27.13	80.0	131.09	N/A	213.79(T)	0.00(L)	**	**
30.52	90.0	73.70	N/A	126.57(T)	0.00(L)	**	**
33.91	100.0	-0.00	N/A	0.00(L)	0.00(L)	**	**

Note:
"N/A" indicates not applicable
"**" indicates not available

LL Codes:
(T) Truck load controls
(L) Lane load controls

Note:
Impact and distribution factors included in above live load moments.

Shears
Live Load HS 20-44

Span 1

Location (ft)	Percent	Stage 1 DL (kip)	Stage 2 DL (kip)	+(LL+I) (kip)	-(LL+I) (kip)	+Impact Factor (%)	-Impact Factor (%)
0.00	0.0	24.15	N/A	42.42(T)	-0.00(L)	**	**
3.39	10.0	19.34	N/A	37.33(T)	-2.66(T)	**	**
6.78	20.0	14.52	N/A	31.52(T)	-5.31(T)	**	**
10.17	30.0	9.71	N/A	26.21(T)	-7.97(T)	**	**
13.56	40.0	4.90	N/A	20.90(T)	-10.62(T)	**	**
16.08	47.4	1.33	N/A	16.97(T)	-14.21(T)	**	**
16.95	50.0	-0.08	N/A	15.59(T)	-15.59(T)	**	**
20.35	60.0	-4.89	N/A	10.62(T)	-20.90(T)	**	**
23.74	70.0	-9.70	N/A	7.97(T)	-26.21(T)	**	**
27.13	80.0	-14.52	N/A	5.31(T)	-31.52(T)	**	**
30.52	90.0	-19.33	N/A	2.66(T)	-37.33(T)	**	**
33.91	100.0	-24.14	N/A	-0.00(L)	-42.42(T)	**	**

Note:
"N/A" indicates not applicable
"**" indicates not available

LL Codes:
(T) Truck load controls
(L) Lane load controls

Note:
Impact and distribution factors included in above live load shears.

Cross Section Properties topic is not available for the specified analysis engine!

Report by Action: ☑ **Flexure** ☑ **Shear** ☑ **Overload** ☑ **Critical**

Detailed Rating Results
H 20-44
Axle Load
Impact: As Requested
Lane: As Requested

Span 1

Location (ft)	Percent	Limit State	Units	Capacity	DL	LL	Inventory Rating Factor	Inventory Load Rating (Ton)	Operating Rating Factor	Operating Load Rating (Ton)
0.00	0.0	Flexure	KIP-FT	2285.32	0.00	0.00	99.000	1980.00	99.000	1980.00
0.00	**0.0**	**Shear**	**KIPS**	**313.82**	**24.15**	**26.32**	**4.943**	**98.86**	**8.255**	**165.09**
0.00	0.0	Overload	KSI	-33.00	-0.00	-0.00	99.000	1980.00	99.000	1980.00
3.39	10.0	Flexure	KIP-FT	2285.32	73.73	92.00	10.962	219.23	18.306	366.12
3.39	**10.0**	**Shear**	**KIPS**	**313.82**	**19.34**	**27.13**	**4.901**	**98.02**	**8.185**	**163.69**
3.39	10.0	Overload	KSI	33.00	2.64	1.95	8.806	176.12	14.706	294.13
6.78	20.0	Flexure	KIP-FT	2285.32	131.14	161.50	6.032	120.64	10.073	201.47
6.78	20.0	Shear	KIPS	313.82	14.52	23.81	5.705	114.10	9.528	190.55
6.78	**20.0**	**Overload**	**KSI**	**33.00**	**4.69**	**3.43**	**4.658**	**93.16**	**7.779**	**155.58**
10.17	30.0	Flexure	KIP-FT	2285.32	172.23	208.48	4.555	91.09	7.606	152.12
10.17	30.0	Shear	KIPS	313.82	9.71	20.49	6.770	135.40	11.306	226.11
10.17	**30.0**	**Overload**	**KSI**	**33.00**	**6.16**	**4.42**	**3.409**	**68.19**	**5.694**	**113.87**
13.56	40.0	Flexure	KIP-FT	2285.32	197.00	232.95	4.012	80.25	6.701	134.01
13.56	40.0	Shear	KIPS	313.82	4.90	17.17	8.246	164.92	13.771	275.42
13.56	**40.0**	**Overload**	**KSI**	**33.00**	**7.05**	**4.94**	**2.944**	**58.88**	**4.916**	**98.33**
16.95	50.0	Flexure	KIP-FT	2285.32	205.30	234.91	3.958	79.15	6.609	132.19
16.95	50.0	Shear	KIPS	313.82	0.08	13.86	10.430	208.60	17.418	348.36
16.95	**50.0**	**Overload**	**KSI**	**33.00**	**7.34**	**4.99**	**2.884**	**57.67**	**4.816**	**96.31**
20.35	60.0	Flexure	KIP-FT	2285.32	196.89	232.95	4.013	80.25	6.701	134.02
20.35	60.0	Shear	KIPS	313.82	4.89	17.17	8.246	164.93	13.771	275.43
20.35	**60.0**	**Overload**	**KSI**	**33.00**	**7.04**	**4.94**	**2.944**	**58.89**	**4.917**	**98.34**
23.74	70.0	Flexure	KIP-FT	2285.32	172.15	208.48	4.555	91.10	7.606	152.13
23.74	70.0	Shear	KIPS	313.82	9.70	20.49	6.770	135.40	11.306	226.12
23.74	**70.0**	**Overload**	**KSI**	**33.00**	**6.16**	**4.42**	**3.410**	**68.20**	**5.694**	**113.89**

27.13	80.0	Flexure	KIP-FT	2285.32	131.09	161.50	6.032	120.64	10.074	201.47
27.13	80.0	Shear	KIPS	313.82	14.52	23.81	5.705	114.11	9.528	190.56
27.13	**80.0**	**Overload**	**KSI**	**33.00**	**4.69**	**3.43**	**4.658**	**93.17**	**7.779**	**155.59**
30.52	90.0	Flexure	KIP-FT	2285.32	73.70	92.00	10.962	219.24	18.306	366.12
30.52	**90.0**	**Shear**	**KIPS**	**313.82**	**19.33**	**27.13**	**4.901**	**98.02**	**8.185**	**163.70**
30.52	90.0	Overload	KSI	33.00	2.64	1.95	8.806	176.13	14.707	294.14
33.91	100.0	Flexure	KIP-FT	2285.32	0.00	0.00	99.000	1980.00	99.000	1980.00
33.91	**100.0**	**Shear**	**KIPS**	**313.82**	**24.14**	**26.32**	**4.943**	**98.86**	**8.255**	**165.10**
33.91	100.0	Overload	KSI	-33.00	-0.00	-0.00	99.000	1980.00	99.000	1980.00

Detailed Rating Results
H 20-44
Lane
Impact: As Requested
Lane: As Requested

Span 1

Location							Inventory Rating	Inventory Load Rating	Operating Rating	Operating Load Rating
(ft)	**Percent**	**Limit State**	**Units**	**Capacity**	**DL**	**LL**	**Factor**	**(Ton)**	**Factor**	**(Ton)**
0.00	0.0	Flexure	KIP-FT	2285.32	0.00	0.00	99.000	1980.00	99.000	1980.00
0.00	**0.0**	**Shear**	**KIPS**	**313.82**	**24.15**	**24.64**	**5.279**	**105.58**	**8.816**	**176.33**
0.00	0.0	Overload	KSI	-33.00	-0.00	-0.00	99.000	1980.00	99.000	1980.00
3.39	10.0	Flexure	KIP-FT	2285.32	73.73	73.06	13.803	276.06	23.051	461.03
3.39	**10.0**	**Shear**	**KIPS**	**313.82**	**19.34**	**26.71**	**4.978**	**99.57**	**8.314**	**166.27**
3.39	10.0	Overload	KSI	33.00	2.64	1.55	11.089	221.78	18.518	370.37
6.78	20.0	Flexure	KIP-FT	2285.32	131.14	129.89	7.500	149.99	12.524	250.49
6.78	20.0	Shear	KIPS	313.82	14.52	23.02	5.901	118.02	9.855	197.09
6.78	**20.0**	**Overload**	**KSI**	**33.00**	**4.69**	**2.76**	**5.791**	**115.83**	**9.672**	**193.43**
10.17	30.0	Flexure	KIP-FT	2285.32	172.23	170.48	5.570	111.39	9.301	186.03
10.17	30.0	Shear	KIPS	313.82	9.71	19.51	7.110	142.19	11.873	237.46
10.17	**30.0**	**Overload**	**KSI**	**33.00**	**6.16**	**3.62**	**4.169**	**83.38**	**6.963**	**139.25**
13.56	40.0	Flexure	KIP-FT	2285.32	197.00	194.84	4.797	95.95	8.012	160.23
13.56	40.0	Shear	KIPS	313.82	4.90	16.19	8.749	174.99	14.611	292.23
13.56	**40.0**	**Overload**	**KSI**	**33.00**	**7.05**	**4.13**	**3.520**	**70.40**	**5.878**	**117.56**
16.95	50.0	Flexure	KIP-FT	2285.32	205.30	202.95	4.581	91.62	7.650	153.00

16.95	50.0	Shear	KIPS	313.82	0.08	13.04	11.083	221.66	18.509	370.18
16.95	**50.0**	**Overload**	**KSI**	**33.00**	**7.34**	**4.31**	**3.338**	**66.75**	**5.574**	**111.48**
20.35	60.0	Flexure	KIP-FT	2285.32	196.89	194.84	4.798	95.95	8.012	160.24
20.35	60.0	Shear	KIPS	313.82	4.89	16.19	8.750	174.99	14.612	292.24
20.35	**60.0**	**Overload**	**KSI**	**33.00**	**7.04**	**4.13**	**3.520**	**70.41**	**5.879**	**117.58**
23.74	70.0	Flexure	KIP-FT	2285.32	172.15	170.48	5.570	111.40	9.302	186.04
23.74	70.0	Shear	KIPS	313.82	9.70	19.51	7.110	142.20	11.873	237.47
23.74	**70.0**	**Overload**	**KSI**	**33.00**	**6.16**	**3.62**	**4.170**	**83.39**	**6.963**	**139.27**
27.13	80.0	Flexure	KIP-FT	2285.32	131.09	129.89	7.500	150.00	12.525	250.50
27.13	80.0	Shear	KIPS	313.82	14.52	23.02	5.901	118.02	9.855	197.10
27.13	**80.0**	**Overload**	**KSI**	**33.00**	**4.69**	**2.76**	**5.792**	**115.84**	**9.672**	**193.45**
30.52	90.0	Flexure	KIP-FT	2285.32	73.70	73.06	13.803	276.07	23.052	461.03
30.52	**90.0**	**Shear**	**KIPS**	**313.82**	**19.33**	**26.71**	**4.978**	**99.57**	**8.314**	**166.28**
30.52	90.0	Overload	KSI	33.00	2.64	1.55	11.089	221.79	18.519	370.38
33.91	100.0	Flexure	KIP-FT	2285.32	0.00	0.00	99.000	1980.00	99.000	1980.00
33.91	**100.0**	**Shear**	**KIPS**	**313.82**	**24.14**	**24.64**	**5.279**	**105.59**	**8.817**	**176.33**
33.91	100.0	Overload	KSI	-33.00	-0.00	-0.00	99.000	1980.00	99.000	1980.00

Detailed Rating Results
HS 20-44
Axle Load
Impact: As Requested
Lane: As Requested

Span 1

Location							**Inventory Rating**	**Inventory Load Rating**	**Operating Rating**	**Operating Load Rating**
(ft)	**Percent**	**Limit State**	**Units**	**Capacity**	**DL**	**LL**	**Factor**	**(Ton)**	**Factor**	**(Ton)**
0.00	0.0	Flexure	KIP-FT	2285.32	0.00	0.00	99.000	3564.00	99.000	3564.00
0.00	**0.0**	**Shear**	**KIPS**	**313.82**	**24.15**	**42.42**	**3.067**	**110.40**	**5.121**	**184.37**
0.00	0.0	Overload	KSI	-33.00	-0.00	-0.00	99.000	3564.00	99.000	3564.00
3.39	10.0	Flexure	KIP-FT	2285.32	73.73	126.57	7.968	286.84	13.306	479.02
3.39	**10.0**	**Shear**	**KIPS**	**313.82**	**19.34**	**37.33**	**3.562**	**128.25**	**5.949**	**214.17**
3.39	10.0	Overload	KSI	33.00	2.64	2.69	6.401	230.44	10.690	384.83
6.78	20.0	Flexure	KIP-FT	2285.32	131.14	213.79	4.557	164.04	7.610	273.94
6.78	20.0	Shear	KIPS	313.82	14.52	31.52	4.310	155.15	7.197	259.10
6.78	**20.0**	**Overload**	**KSI**	**33.00**	**4.69**	**4.54**	**3.519**	**126.67**	**5.876**	**211.55**

10.17	30.0	Flexure	KIP-FT	2285.32	172.23	266.65	3.561	128.19	5.947	214.08
10.17	30.0	Shear	KIPS	313.82	9.71	26.21	5.293	190.54	8.839	318.21
10.17	**30.0**	**Overload**	**KSI**	**33.00**	**6.16**	**5.66**	**2.666**	**95.96**	**4.451**	**160.25**
13.56	40.0	Flexure	KIP-FT	2285.32	197.00	283.50	3.297	118.69	5.506	198.21
13.56	40.0	Shear	KIPS	313.82	4.90	20.90	6.776	243.92	11.315	407.35
13.56	**40.0**	**Overload**	**KSI**	**33.00**	**7.05**	**6.02**	**2.419**	**87.08**	**4.040**	**145.43**
16.95	50.0	Flexure	KIP-FT	2285.32	205.30	274.15	3.391	122.09	5.664	203.89
16.95	50.0	Shear	KIPS	313.82	0.08	15.59	9.269	333.68	15.479	557.24
16.95	**50.0**	**Overload**	**KSI**	**33.00**	**7.34**	**5.82**	**2.471**	**88.95**	**4.126**	**148.55**
20.35	60.0	Flexure	KIP-FT	2285.32	196.89	283.50	3.297	118.70	5.506	198.23
20.35	60.0	Shear	KIPS	313.82	4.89	20.90	6.776	243.93	11.316	407.37
20.35	**60.0**	**Overload**	**KSI**	**33.00**	**7.04**	**6.02**	**2.419**	**87.10**	**4.040**	**145.45**
23.74	70.0	Flexure	KIP-FT	2285.32	172.15	266.65	3.561	128.20	5.947	214.09
23.74	70.0	Shear	KIPS	313.82	9.70	26.21	5.293	190.55	8.839	318.22
23.74	**70.0**	**Overload**	**KSI**	**33.00**	**6.16**	**5.66**	**2.666**	**95.97**	**4.452**	**160.27**
27.13	80.0	Flexure	KIP-FT	2285.32	131.09	213.79	4.557	164.04	7.610	273.95
27.13	80.0	Shear	KIPS	313.82	14.52	31.52	4.310	155.16	7.198	259.11
27.13	**80.0**	**Overload**	**KSI**	**33.00**	**4.69**	**4.54**	**3.519**	**126.68**	**5.877**	**211.56**
30.52	90.0	Flexure	KIP-FT	2285.32	73.70	126.57	7.968	286.85	13.306	479.03
30.52	**90.0**	**Shear**	**KIPS**	**313.82**	**19.33**	**37.33**	**3.563**	**128.25**	**5.949**	**214.18**
30.52	90.0	Overload	KSI	33.00	2.64	2.69	6.401	230.44	10.690	384.84
33.91	100.0	Flexure	KIP-FT	2285.32	0.00	0.00	99.000	3564.00	99.000	3564.00
33.91	**100.0**	**Shear**	**KIPS**	**313.82**	**24.14**	**42.42**	**3.067**	**110.41**	**5.122**	**184.38**
33.91	100.0	Overload	KSI	-33.00	-0.00	-0.00	99.000	3564.00	99.000	3564.00

Detailed Rating Results
HS 20-44
Lane
Impact: As Requested
Lane: As Requested

Span 1

Location							Inventory Rating	Inventory Load Rating	Operating Rating	Operating Load Rating
(ft)	**Percent**	**Limit State**	**Units**	**Capacity**	**DL**	**LL**	**Factor**	**(Ton)**	**Factor**	**(Ton)**
0.00	0.0	Flexure	KIP-FT	2285.32	0.00	0.00	99.000	3564.00	99.000	3564.00

0.00	**0.0**	**Shear**	**KIPS**	**313.82**	**24.15**	**24.64**	**5.279**	**190.05**	**8.816**	**317.39**
0.00	0.0	Overload	KSI	-33.00	-0.00	-0.00	99.000	3564.00	99.000	3564.00
3.39	10.0	Flexure	KIP-FT	2285.32	73.73	73.06	13.803	496.91	23.051	829.85
3.39	**10.0**	**Shear**	**KIPS**	**313.82**	**19.34**	**26.71**	**4.978**	**179.22**	**8.314**	**299.29**
3.39	10.0	Overload	KSI	33.00	2.64	1.55	11.089	399.20	18.518	666.67
6.78	20.0	Flexure	KIP-FT	2285.32	131.14	129.89	7.500	269.99	12.524	450.88
6.78	20.0	Shear	KIPS	313.82	14.52	23.02	5.901	212.44	9.855	354.77
6.78	**20.0**	**Overload**	**KSI**	**33.00**	**4.69**	**2.76**	**5.791**	**208.49**	**9.672**	**348.18**
10.17	30.0	Flexure	KIP-FT	2285.32	172.23	170.48	5.570	200.51	9.301	334.85
10.17	30.0	Shear	KIPS	313.82	9.71	19.51	7.110	255.94	11.873	427.42
10.17	**30.0**	**Overload**	**KSI**	**33.00**	**6.16**	**3.62**	**4.169**	**150.09**	**6.963**	**250.66**
13.56	40.0	Flexure	KIP-FT	2285.32	197.00	194.84	4.797	172.70	8.012	288.42
13.56	40.0	Shear	KIPS	313.82	4.90	16.19	8.749	314.98	14.611	526.01
13.56	**40.0**	**Overload**	**KSI**	**33.00**	**7.05**	**4.13**	**3.520**	**126.71**	**5.878**	**211.61**
16.95	50.0	Flexure	KIP-FT	2285.32	205.30	202.95	4.581	164.91	7.650	275.41
16.95	50.0	Shear	KIPS	313.82	0.08	13.04	11.083	398.99	18.509	666.32
16.95	**50.0**	**Overload**	**KSI**	**33.00**	**7.34**	**4.31**	**3.338**	**120.16**	**5.574**	**200.66**
20.35	60.0	Flexure	KIP-FT	2285.32	196.89	194.84	4.798	172.72	8.012	288.44
20.35	60.0	Shear	KIPS	313.82	4.89	16.19	8.750	314.99	14.612	526.03
20.35	**60.0**	**Overload**	**KSI**	**33.00**	**7.04**	**4.13**	**3.520**	**126.73**	**5.879**	**211.64**
23.74	70.0	Flexure	KIP-FT	2285.32	172.15	170.48	5.570	200.52	9.302	334.87
23.74	70.0	Shear	KIPS	313.82	9.70	19.51	7.110	255.95	11.873	427.44
23.74	**70.0**	**Overload**	**KSI**	**33.00**	**6.16**	**3.62**	**4.170**	**150.11**	**6.963**	**250.69**
27.13	80.0	Flexure	KIP-FT	2285.32	131.09	129.89	7.500	270.00	12.525	450.89
27.13	80.0	Shear	KIPS	313.82	14.52	23.02	5.901	212.44	9.855	354.78
27.13	**80.0**	**Overload**	**KSI**	**33.00**	**4.69**	**2.76**	**5.792**	**208.51**	**9.672**	**348.21**
30.52	90.0	Flexure	KIP-FT	2285.32	73.70	73.06	13.803	496.92	23.052	829.86
30.52	**90.0**	**Shear**	**KIPS**	**313.82**	**19.33**	**26.71**	**4.978**	**179.23**	**8.314**	**299.31**
30.52	90.0	Overload	KSI	33.00	2.64	1.55	11.089	399.21	18.519	666.69
33.91	100.0	Flexure	KIP-FT	2285.32	0.00	0.00	99.000	3564.00	99.000	3564.00
33.91	**100.0**	**Shear**	**KIPS**	**313.82**	**24.14**	**24.64**	**5.279**	**190.06**	**8.817**	**317.40**
33.91	100.0	Overload	KSI	-33.00	-0.00	-0.00	99.000	3564.00	99.000	3564.00

Bridge Name: 1031529
NBI Structure ID: 1031529
Bridge ID: 1031529

Analyzed By: BrR
Analyze Date: Tuesday, April 15, 2014 10:54:17
Analysis Engine: AASHTO LFR Engine Version 6.5.0.3001
Analysis Preference Setting: None

Report By: brr
Report Date: Tuesday, April 15, 2014 11:13:07

Structure Definition Name: Span 1 (NB)
Member Name: G2 (S5 plan designation)
Member Alternative Name: 5% Section Loss

Load Factor Rating Summary

Live Load		Rating Factor	Controls	Capacity (Ton)	Span	Location (ft)	Percent	Impact	Lane
H 20-44	Inventory	3.008	Service - Steel	60.17	1	16.95	50.0	As Requested	As Requested
	Operating	5.024	Service - Steel	100.48	1	16.95	50.0	As Requested	As Requested
HS 20-44	Inventory	2.513	Service - Steel	90.45	1	13.56	40.0	As Requested	As Requested
	Operating	4.196	Service - Steel	151.06	1	13.56	40.0	As Requested	As Requested

Note:
"N/A" indicates not applicable
"**" indicates not available

Individual Vehicle Load Factor Rating Summary

Live Load		Vehicle Type	Rating Factor	Controls	Capacity (Ton)	Location Span	(ft)	Percent	Impact	Lane
H 20-44	Inventory	Lane	3.482	Service - Steel	69.64	1	16.95	50.0	As Requested	As Requested
	Operating	Lane	5.815	Service - Steel	116.31	1	16.95	50.0	As Requested	As Requested
H 20-44	Inventory	Axle Load	3.008	Service - Steel	60.17	1	16.95	50.0	As Requested	As Requested
	Operating	Axle Load	5.024	Service - Steel	100.48	1	16.95	50.0	As Requested	As Requested

Note:
"N/A" indicates not applicable
"**" indicates not available

Reactions
Live Load H 20-44

Support	Stage 1 DL (kip)	Stage 2 DL (kip)	+(LL+I) (kip)	-(LL+I) (kip)	Reaction +IF (%)	Reaction -IF (%)
1	16.42	N/A	38.42(L)	0.00(L)	30.000	0.000
2	16.44	N/A	38.42(L)	0.00(L)	30.000	0.000

Note:
"N/A" indicates not applicable
"**" indicates not available

LL Codes:
(T) Truck load controls
(L) Lane load controls

Note:
Impact and distribution factors included in above live load reactions.

Moments
Live Load H 20-44

Span 1

Location (ft)	Percent	Stage 1 DL (kip-ft)	Stage 2 DL (kip-ft)	+(LL+I) (kip-ft)	-(LL+I) (kip-ft)	+Impact Factor (%)	-Impact Factor (%)
0.00	0.0	0.00	N/A	-0.00(L)	-0.00(L)	**	**
3.39	10.0	49.43	N/A	98.28(T)	0.00(L)	**	**
6.78	20.0	88.00	N/A	172.51(T)	0.00(L)	**	**
10.17	30.0	115.71	N/A	222.69(T)	0.00(L)	**	**
13.56	40.0	132.56	N/A	248.83(T)	0.00(L)	**	**
16.08	47.4	138.03	N/A	252.69(T)	0.00(L)	**	**
16.95	50.0	138.40	N/A	250.93(T)	0.00(L)	**	**
17.26	50.9	138.36	N/A	251.72(T)	0.00(L)	**	**
20.35	60.0	132.48	N/A	248.83(T)	0.00(L)	**	**
23.74	70.0	115.66	N/A	222.69(T)	0.00(L)	**	**
27.13	80.0	87.97	N/A	172.51(T)	0.00(L)	**	**
30.52	90.0	49.41	N/A	98.28(T)	0.00(L)	**	**
33.91	100.0	0.00	N/A	0.00(L)	0.00(L)	**	**

Note:
"N/A" indicates not applicable
"**" indicates not available

LL Codes:
(T) Truck load controls
(L) Lane load controls

Note:
Impact and distribution factors included in above live load moments.

Shears
Live Load H 20-44

Span 1

Location (ft)	Percent	Stage 1 DL (kip)	Stage 2 DL (kip)	+(LL+I) (kip)	-(LL+I) (kip)	+Impact Factor (%)	-Impact Factor (%)
0.00	0.0	16.18	N/A	37.53(T)	-0.00(L)	**	**
3.39	10.0	12.98	N/A	28.98(T)	-2.84(T)	**	**
6.78	20.0	9.77	N/A	25.44(T)	-5.67(T)	**	**
10.17	30.0	6.57	N/A	21.89(T)	-8.51(T)	**	**
13.56	40.0	3.37	N/A	18.35(T)	-11.35(T)	**	**
16.08	47.4	0.99	N/A	15.72(T)	-13.88(T)	**	**
16.95	50.0	0.00	N/A	14.80(T)	-14.80(T)	**	**
17.26	50.9	-0.28	N/A	14.48(T)	-15.12(T)	**	**
20.35	60.0	-3.36	N/A	11.35(T)	-18.35(T)	**	**
23.74	70.0	-6.56	N/A	8.51(T)	-21.89(T)	**	**
27.13	80.0	-9.77	N/A	5.67(T)	-25.44(T)	**	**
30.52	90.0	-12.97	N/A	2.84(T)	-28.98(T)	**	**
33.91	100.0	-16.17	N/A	-0.00(L)	-37.53(T)	**	**

Note:
"N/A" indicates not applicable
"**" indicates not available

LL Codes:
(T) Truck load controls
(L) Lane load controls

Note:
Impact and distribution factors included in above live load shears.

Individual Vehicle Load Factor Rating Summary

Live Load		Vehicle Type	Rating Factor	Controls	Capacity (Ton)	Location Span	(ft)	Percent	Impact	Lane
HS 20-44	Inventory	Lane	3.482	Service - Steel	125.36	1	16.95	50.0	As Requested	As Requested
	Operating	Lane	5.815	Service - Steel	209.35	1	16.95	50.0	As Requested	As Requested
HS 20-44	Inventory	Axle Load	2.513	Service - Steel	90.45	1	13.56	40.0	As Requested	As Requested
	Operating	Axle Load	4.196	Service - Steel	151.06	1	13.56	40.0	As Requested	As Requested

Note:
"N/A" indicates not applicable
"**" indicates not available

Reactions
Live Load HS 20-44

Support	Stage 1 DL (kip)	Stage 2 DL (kip)	+(LL+I) (kip)	-(LL+I) (kip)	Reaction +IF (%)	Reaction -IF (%)
1	16.42	N/A	54.41(T)	0.00(L)	30.000	0.000
2	16.44	N/A	54.41(T)	0.00(L)	30.000	0.000

Note:
"N/A" indicates not applicable
"**" indicates not available

LL Codes:
(T) Truck load controls
(L) Lane load controls

Note:
Impact and distribution factors included in above live load reactions.

Moments
Live Load HS 20-44

Span 1

Location (ft)	Percent	Stage 1 DL (kip-ft)	Stage 2 DL (kip-ft)	+(LL+I) (kip-ft)	-(LL+I) (kip-ft)	+Impact Factor (%)	-Impact Factor (%)
0.00	0.0	0.00	N/A	-0.00(L)	-0.00(L)	**	**
3.39	10.0	49.43	N/A	135.20(T)	0.00(L)	**	**
6.78	20.0	88.00	N/A	228.36(T)	0.00(L)	**	**
10.17	30.0	115.71	N/A	284.83(T)	0.00(L)	**	**
13.56	40.0	132.56	N/A	302.83(T)	0.00(L)	**	**
16.08	47.4	138.03	N/A	299.10(T)	0.00(L)	**	**
16.95	50.0	138.40	N/A	292.84(T)	0.00(L)	**	**
17.26	50.9	138.36	N/A	295.32(T)	0.00(L)	**	**
20.35	60.0	132.48	N/A	302.83(T)	0.00(L)	**	**
23.74	70.0	115.66	N/A	284.83(T)	0.00(L)	**	**
27.13	80.0	87.97	N/A	228.36(T)	0.00(L)	**	**
30.52	90.0	49.41	N/A	135.20(T)	0.00(L)	**	**
33.91	100.0	0.00	N/A	0.00(L)	0.00(L)	**	**

Note:
"N/A" indicates not applicable
"**" indicates not available

LL Codes:
(T) Truck load controls
(L) Lane load controls

Note:
Impact and distribution factors included in above live load moments.

Shears
Live Load HS 20-44

Span 1

Location (ft)	Percent	Stage 1 DL (kip)	Stage 2 DL (kip)	+(LL+I) (kip)	-(LL+I) (kip)	+Impact Factor (%)	-Impact Factor (%)
0.00	0.0	16.18	N/A	51.25(T)	-0.00(L)	**	**
3.39	10.0	12.98	N/A	39.87(T)	-2.84(T)	**	**
6.78	20.0	9.77	N/A	33.67(T)	-5.67(T)	**	**
10.17	30.0	6.57	N/A	28.00(T)	-8.51(T)	**	**
13.56	40.0	3.37	N/A	22.33(T)	-11.35(T)	**	**
16.08	47.4	0.99	N/A	18.12(T)	-15.18(T)	**	**
16.95	50.0	0.00	N/A	16.65(T)	-16.65(T)	**	**
17.26	50.9	-0.28	N/A	16.15(T)	-17.16(T)	**	**
20.35	60.0	-3.36	N/A	11.35(T)	-22.33(T)	**	**
23.74	70.0	-6.56	N/A	8.51(T)	-28.00(T)	**	**
27.13	80.0	-9.77	N/A	5.67(T)	-33.67(T)	**	**
30.52	90.0	-12.97	N/A	2.84(T)	-39.87(T)	**	**
33.91	100.0	-16.17	N/A	-0.00(L)	-51.25(T)	**	**

Note:
"N/A" indicates not applicable
"**" indicates not available

LL Codes:
(T) Truck load controls
(L) Lane load controls

Note:
Impact and distribution factors included in above live load shears.

Cross Section Properties topic is not available for the specified analysis engine!

Report by Action: ☑ **Flexure** ☑ **Shear** ☑ **Overload** ☑ **Critical**

Detailed Rating Results
H 20-44
Axle Load
Impact: As Requested
Lane: As Requested

Span 1

Location (ft)	Percent	Limit State	Units	Capacity	DL	LL	Inventory Rating Factor	Inventory Load Rating (Ton)	Operating Rating Factor	Operating Load Rating (Ton)
0.00	0.0	Flexure	KIP-FT	2316.42	0.00	0.00	99.000	1980.00	99.000	1980.00
0.00	**0.0**	**Shear**	**KIPS**	**313.82**	**16.18**	**37.53**	**3.594**	**71.88**	**6.002**	**120.03**
0.00	0.0	Overload	KSI	-33.00	-0.00	-0.00	99.000	1980.00	99.000	1980.00
3.39	10.0	Flexure	KIP-FT	2316.42	49.43	98.28	10.556	211.12	17.628	352.56
3.39	**10.0**	**Shear**	**KIPS**	**313.82**	**12.98**	**28.98**	**4.720**	**94.39**	**7.882**	**157.63**
3.39	10.0	Overload	KSI	33.00	1.77	2.06	8.608	172.15	14.375	287.49
6.78	20.0	Flexure	KIP-FT	2316.42	88.00	172.51	5.880	117.59	9.819	196.38
6.78	20.0	Shear	KIPS	313.82	9.77	25.44	5.453	109.06	9.106	182.13
6.78	**20.0**	**Overload**	**KSI**	**33.00**	**3.15**	**3.61**	**4.675**	**93.50**	**7.807**	**156.14**
10.17	30.0	Flexure	KIP-FT	2316.42	115.71	222.69	4.480	89.60	7.482	149.64
10.17	30.0	Shear	KIPS	313.82	6.57	21.89	6.424	128.47	10.727	214.55
10.17	**30.0**	**Overload**	**KSI**	**33.00**	**4.14**	**4.66**	**3.494**	**69.88**	**5.835**	**116.70**
13.56	40.0	Flexure	KIP-FT	2316.42	132.56	248.83	3.969	79.38	6.628	132.56
13.56	40.0	Shear	KIPS	313.82	3.37	18.35	7.770	155.39	12.975	259.51
13.56	**40.0**	**Overload**	**KSI**	**33.00**	**4.74**	**5.21**	**3.058**	**61.16**	**5.107**	**102.13**
16.95	50.0	Flexure	KIP-FT	2316.42	138.40	250.93	3.922	78.44	6.550	130.99
16.95	50.0	Shear	KIPS	313.82	0.00	14.80	9.767	195.34	16.311	326.22
16.95	**50.0**	**Overload**	**KSI**	**33.00**	**4.95**	**5.25**	**3.008**	**60.17**	**5.024**	**100.48**
20.35	60.0	Flexure	KIP-FT	2316.42	132.48	248.83	3.969	79.38	6.628	132.57
20.35	60.0	Shear	KIPS	313.82	3.36	18.35	7.770	155.40	12.976	259.51
20.35	**60.0**	**Overload**	**KSI**	**33.00**	**4.74**	**5.21**	**3.058**	**61.16**	**5.107**	**102.14**
23.74	70.0	Flexure	KIP-FT	2316.42	115.66	222.69	4.480	89.61	7.482	149.64
23.74	70.0	Shear	KIPS	313.82	6.56	21.89	6.424	128.48	10.728	214.55
23.74	**70.0**	**Overload**	**KSI**	**33.00**	**4.14**	**4.66**	**3.494**	**69.89**	**5.836**	**116.71**

27.13	80.0	Flexure	KIP-FT	2316.42	87.97	172.51	5.880	117.60	9.819	196.39
27.13	80.0	Shear	KIPS	313.82	9.77	25.44	5.453	109.06	9.106	182.13
27.13	**80.0**	**Overload**	**KSI**	**33.00**	**3.15**	**3.61**	**4.675**	**93.50**	**7.808**	**156.15**
30.52	90.0	Flexure	KIP-FT	2316.42	49.41	98.28	10.556	211.12	17.628	352.57
30.52	**90.0**	**Shear**	**KIPS**	**313.82**	**12.97**	**28.98**	**4.720**	**94.39**	**7.882**	**157.64**
30.52	90.0	Overload	KSI	33.00	1.77	2.06	8.608	172.15	14.375	287.50
33.91	100.0	Flexure	KIP-FT	2316.42	0.00	0.00	99.000	1980.00	99.000	1980.00
33.91	**100.0**	**Shear**	**KIPS**	**313.82**	**16.17**	**37.53**	**3.594**	**71.88**	**6.002**	**120.04**
33.91	100.0	Overload	KSI	-33.00	-0.00	-0.00	99.000	1980.00	99.000	1980.00

Detailed Rating Results
H 20-44
Lane
Impact: As Requested
Lane: As Requested

Span 1

Location							Inventory Rating Factor	Inventory Load Rating (Ton)	Operating Rating Factor	Operating Load Rating (Ton)
(ft)	**Percent**	**Limit State**	**Units**	**Capacity**	**DL**	**LL**				
0.00	0.0	Flexure	KIP-FT	2316.42	0.00	0.00	99.000	1980.00	99.000	1980.00
0.00	**0.0**	**Shear**	**KIPS**	**313.82**	**16.18**	**36.73**	**3.672**	**73.44**	**6.132**	**122.65**
0.00	0.0	Overload	KSI	-33.00	-0.00	-0.00	99.000	1980.00	99.000	1980.00
3.39	10.0	Flexure	KIP-FT	2316.42	49.43	78.05	13.292	265.84	22.198	443.96
3.39	**10.0**	**Shear**	**KIPS**	**313.82**	**12.98**	**28.53**	**4.794**	**95.88**	**8.006**	**160.12**
3.39	10.0	Overload	KSI	33.00	1.77	1.63	10.839	216.78	18.101	362.02
6.78	20.0	Flexure	KIP-FT	2316.42	88.00	138.75	7.310	146.21	12.208	244.17
6.78	**20.0**	**Shear**	**KIPS**	**313.82**	**9.77**	**24.59**	**5.640**	**112.80**	**9.419**	**188.38**
6.78	20.0	Overload	KSI	33.00	3.15	2.91	5.812	116.25	9.707	194.14
10.17	30.0	Flexure	KIP-FT	2316.42	115.71	182.11	5.479	109.57	9.149	182.99
10.17	30.0	Shear	KIPS	313.82	6.57	20.84	6.746	134.92	11.266	225.32
10.17	**30.0**	**Overload**	**KSI**	**33.00**	**4.14**	**3.81**	**4.273**	**85.46**	**7.136**	**142.72**
13.56	40.0	Flexure	KIP-FT	2316.42	132.56	208.12	4.745	94.91	7.925	158.50
13.56	40.0	Shear	KIPS	313.82	3.37	17.29	8.244	164.88	13.767	275.35
13.56	**40.0**	**Overload**	**KSI**	**33.00**	**4.74**	**4.36**	**3.656**	**73.12**	**6.106**	**122.11**
16.95	50.0	Flexure	KIP-FT	2316.42	138.40	216.79	4.539	90.79	7.581	151.62

16.95	50.0	Shear	KIPS	313.82	0.00	13.93	10.379	207.58	17.333	346.66
16.95	**50.0**	**Overload**	**KSI**	**33.00**	**4.95**	**4.54**	**3.482**	**69.64**	**5.815**	**116.31**
20.35	60.0	Flexure	KIP-FT	2316.42	132.48	208.12	4.746	94.91	7.925	158.50
20.35	60.0	Shear	KIPS	313.82	3.36	17.29	8.244	164.88	13.768	275.35
20.35	**60.0**	**Overload**	**KSI**	**33.00**	**4.74**	**4.36**	**3.656**	**73.13**	**6.106**	**122.12**
23.74	70.0	Flexure	KIP-FT	2316.42	115.66	182.11	5.479	109.58	9.150	182.99
23.74	70.0	Shear	KIPS	313.82	6.56	20.84	6.746	134.92	11.266	225.32
23.74	**70.0**	**Overload**	**KSI**	**33.00**	**4.14**	**3.81**	**4.273**	**85.46**	**7.136**	**142.73**
27.13	80.0	Flexure	KIP-FT	2316.42	87.97	138.75	7.310	146.21	12.209	244.17
27.13	**80.0**	**Shear**	**KIPS**	**313.82**	**9.77**	**24.59**	**5.640**	**112.80**	**9.419**	**188.38**
27.13	80.0	Overload	KSI	33.00	3.15	2.91	5.813	116.26	9.707	194.15
30.52	90.0	Flexure	KIP-FT	2316.42	49.41	78.05	13.292	265.84	22.198	443.96
30.52	**90.0**	**Shear**	**KIPS**	**313.82**	**12.97**	**28.53**	**4.794**	**95.88**	**8.006**	**160.12**
30.52	90.0	Overload	KSI	33.00	1.77	1.63	10.839	216.78	18.101	362.02
33.91	100.0	Flexure	KIP-FT	2316.42	0.00	0.00	99.000	1980.00	99.000	1980.00
33.91	**100.0**	**Shear**	**KIPS**	**313.82**	**16.17**	**36.73**	**3.672**	**73.44**	**6.133**	**122.65**
33.91	100.0	Overload	KSI	-33.00	-0.00	-0.00	99.000	1980.00	99.000	1980.00

Detailed Rating Results
HS 20-44
Axle Load
Impact: As Requested
Lane: As Requested

Span 1

Location							Inventory Rating Factor	Inventory Load Rating (Ton)	Operating Rating Factor	Operating Load Rating (Ton)
(ft)	**Percent**	**Limit State**	**Units**	**Capacity**	**DL**	**LL**				
0.00	0.0	Flexure	KIP-FT	2316.42	0.00	0.00	99.000	3564.00	99.000	3564.00
0.00	**0.0**	**Shear**	**KIPS**	**313.82**	**16.18**	**51.25**	**2.631**	**94.73**	**4.394**	**158.20**
0.00	0.0	Overload	KSI	-33.00	-0.00	-0.00	99.000	3564.00	99.000	3564.00
3.39	10.0	Flexure	KIP-FT	2316.42	49.43	135.20	7.673	276.22	12.814	461.29
3.39	**10.0**	**Shear**	**KIPS**	**313.82**	**12.98**	**39.87**	**3.431**	**123.50**	**5.729**	**206.25**
3.39	10.0	Overload	KSI	33.00	1.77	2.83	6.257	225.24	10.449	376.15
6.78	20.0	Flexure	KIP-FT	2316.42	88.00	228.36	4.442	159.90	7.417	267.03
6.78	20.0	Shear	KIPS	313.82	9.77	33.67	4.119	148.29	6.879	247.64
6.78	**20.0**	**Overload**	**KSI**	**33.00**	**3.15**	**4.78**	**3.532**	**127.14**	**5.898**	**212.32**

10.17	30.0	Flexure	KIP-FT	2316.42	115.71	284.83	3.503	126.10	5.850	210.58
10.17	30.0	Shear	KIPS	313.82	6.57	28.00	5.022	180.80	8.387	301.94
10.17	**30.0**	**Overload**	**KSI**	**33.00**	**4.14**	**5.96**	**2.732**	**98.35**	**4.562**	**164.24**
13.56	40.0	Flexure	KIP-FT	2316.42	132.56	302.83	3.261	117.40	5.446	196.07
13.56	40.0	Shear	KIPS	313.82	3.37	22.33	6.384	229.83	10.662	383.82
13.56	**40.0**	**Overload**	**KSI**	**33.00**	**4.74**	**6.34**	**2.513**	**90.45**	**4.196**	**151.06**
16.95	50.0	Flexure	KIP-FT	2316.42	138.40	292.84	3.361	120.98	5.612	202.04
16.95	50.0	Shear	KIPS	313.82	0.00	16.65	8.680	312.47	14.495	521.83
16.95	**50.0**	**Overload**	**KSI**	**33.00**	**4.95**	**6.13**	**2.578**	**92.81**	**4.305**	**154.99**
20.35	60.0	Flexure	KIP-FT	2316.42	132.48	302.83	3.261	117.41	5.447	196.07
20.35	60.0	Shear	KIPS	313.82	3.36	22.33	6.384	229.84	10.662	383.83
20.35	**60.0**	**Overload**	**KSI**	**33.00**	**4.74**	**6.34**	**2.513**	**90.46**	**4.196**	**151.07**
23.74	70.0	Flexure	KIP-FT	2316.42	115.66	284.83	3.503	126.10	5.850	210.59
23.74	70.0	Shear	KIPS	313.82	6.56	28.00	5.022	180.80	8.387	301.94
23.74	**70.0**	**Overload**	**KSI**	**33.00**	**4.14**	**5.96**	**2.732**	**98.35**	**4.563**	**164.25**
27.13	80.0	Flexure	KIP-FT	2316.42	87.97	228.36	4.442	159.90	7.418	267.03
27.13	80.0	Shear	KIPS	313.82	9.77	33.67	4.119	148.29	6.879	247.65
27.13	**80.0**	**Overload**	**KSI**	**33.00**	**3.15**	**4.78**	**3.532**	**127.14**	**5.898**	**212.33**
30.52	90.0	Flexure	KIP-FT	2316.42	49.41	135.20	7.673	276.22	12.814	461.29
30.52	**90.0**	**Shear**	**KIPS**	**313.82**	**12.97**	**39.87**	**3.431**	**123.50**	**5.729**	**206.25**
30.52	90.0	Overload	KSI	33.00	1.77	2.83	6.257	225.24	10.449	376.16
33.91	100.0	Flexure	KIP-FT	2316.42	0.00	0.00	99.000	3564.00	99.000	3564.00
33.91	**100.0**	**Shear**	**KIPS**	**313.82**	**16.17**	**51.25**	**2.631**	**94.73**	**4.394**	**158.20**
33.91	100.0	Overload	KSI	-33.00	-0.00	-0.00	99.000	3564.00	99.000	3564.00

Detailed Rating Results
HS 20-44
Lane
Impact: As Requested
Lane: As Requested

Span 1

Location							Inventory Rating	Inventory Load Rating	Operating Rating	Operating Load Rating
(ft)	**Percent**	**Limit State**	**Units**	**Capacity**	**DL**	**LL**	**Factor**	**(Ton)**	**Factor**	**(Ton)**
0.00	0.0	Flexure	KIP-FT	2316.42	0.00	0.00	99.000	3564.00	99.000	3564.00

0.00	**0.0**	**Shear**	**KIPS**	**313.82**	**16.18**	**36.73**	**3.672**	**132.20**	**6.132**	**220.77**
0.00	0.0	Overload	KSI	-33.00	-0.00	-0.00	99.000	3564.00	99.000	3564.00
3.39	10.0	Flexure	KIP-FT	2316.42	49.43	78.05	13.292	478.51	22.198	799.12
3.39	**10.0**	**Shear**	**KIPS**	**313.82**	**12.98**	**28.53**	**4.794**	**172.58**	**8.006**	**288.22**
3.39	10.0	Overload	KSI	33.00	1.77	1.63	10.839	390.20	18.101	651.63
6.78	20.0	Flexure	KIP-FT	2316.42	88.00	138.75	7.310	263.17	12.208	439.50
6.78	**20.0**	**Shear**	**KIPS**	**313.82**	**9.77**	**24.59**	**5.640**	**203.04**	**9.419**	**339.08**
6.78	20.0	Overload	KSI	33.00	3.15	2.91	5.812	209.25	9.707	349.45
10.17	30.0	Flexure	KIP-FT	2316.42	115.71	182.11	5.479	197.23	9.149	329.38
10.17	30.0	Shear	KIPS	313.82	6.57	20.84	6.746	242.85	11.266	405.57
10.17	**30.0**	**Overload**	**KSI**	**33.00**	**4.14**	**3.81**	**4.273**	**153.83**	**7.136**	**256.89**
13.56	40.0	Flexure	KIP-FT	2316.42	132.56	208.12	4.745	170.83	7.925	285.29
13.56	40.0	Shear	KIPS	313.82	3.37	17.29	8.244	296.78	13.767	495.62
13.56	**40.0**	**Overload**	**KSI**	**33.00**	**4.74**	**4.36**	**3.656**	**131.62**	**6.106**	**219.80**
16.95	50.0	Flexure	KIP-FT	2316.42	138.40	216.79	4.539	163.42	7.581	272.91
16.95	50.0	Shear	KIPS	313.82	0.00	13.93	10.379	373.64	17.333	623.98
16.95	**50.0**	**Overload**	**KSI**	**33.00**	**4.95**	**4.54**	**3.482**	**125.36**	**5.815**	**209.35**
20.35	60.0	Flexure	KIP-FT	2316.42	132.48	208.12	4.746	170.84	7.925	285.30
20.35	60.0	Shear	KIPS	313.82	3.36	17.29	8.244	296.79	13.768	495.64
20.35	**60.0**	**Overload**	**KSI**	**33.00**	**4.74**	**4.36**	**3.656**	**131.63**	**6.106**	**219.82**
23.74	70.0	Flexure	KIP-FT	2316.42	115.66	182.11	5.479	197.24	9.150	329.39
23.74	70.0	Shear	KIPS	313.82	6.56	20.84	6.746	242.86	11.266	405.58
23.74	**70.0**	**Overload**	**KSI**	**33.00**	**4.14**	**3.81**	**4.273**	**153.84**	**7.136**	**256.91**
27.13	80.0	Flexure	KIP-FT	2316.42	87.97	138.75	7.310	263.18	12.209	439.51
27.13	**80.0**	**Shear**	**KIPS**	**313.82**	**9.77**	**24.59**	**5.640**	**203.05**	**9.419**	**339.09**
27.13	80.0	Overload	KSI	33.00	3.15	2.91	5.813	209.26	9.707	349.46
30.52	90.0	Flexure	KIP-FT	2316.42	49.41	78.05	13.292	478.52	22.198	799.13
30.52	**90.0**	**Shear**	**KIPS**	**313.82**	**12.97**	**28.53**	**4.794**	**172.59**	**8.006**	**288.22**
30.52	90.0	Overload	KSI	33.00	1.77	1.63	10.839	390.21	18.101	651.64
33.91	100.0	Flexure	KIP-FT	2316.42	0.00	0.00	99.000	3564.00	99.000	3564.00
33.91	**100.0**	**Shear**	**KIPS**	**313.82**	**16.17**	**36.73**	**3.672**	**132.20**	**6.133**	**220.77**
33.91	100.0	Overload	KSI	-33.00	-0.00	-0.00	99.000	3564.00	99.000	3564.00

Bridge Name: 1031529
NBI Structure ID: 1031529
Bridge ID: 1031529

Analyzed By: BrR
Analyze Date: Tuesday, April 15, 2014 10:54:17
Analysis Engine: AASHTO LFR Engine Version 6.5.0.3001
Analysis Preference Setting: None

Report By: brr
Report Date: Tuesday, April 15, 2014 11:13:07

Structure Definition Name: Span 1 (NB)
Member Name: G7 (S6 plan designation)
Member Alternative Name: 5% Section Loss

Load Factor Rating Summary

Live Load		Rating Factor	Controls	Capacity (Ton)	Span	Location (ft)	Percent	Impact	Lane
H 20-44	Inventory	3.623	Service - Steel	72.46	1	16.95	50.0	As Requested	As Requested
	Operating	6.050	Service - Steel	121.00	1	16.95	50.0	As Requested	As Requested
HS 20-44	Inventory	3.031	Service - Steel	109.12	1	20.35	60.0	As Requested	As Requested
	Operating	5.062	Service - Steel	182.24	1	20.35	60.0	As Requested	As Requested

Note:
"N/A" indicates not applicable
"**" indicates not available

Individual Vehicle Load Factor Rating Summary

Live Load		Vehicle Type	Rating Factor	Controls	Capacity (Ton)	Location Span	(ft)	Percent	Impact	Lane
H 20-44	Inventory	Lane	4.193	Service - Steel	83.87	1	16.95	50.0	As Requested	As Requested
	Operating	Lane	7.003	Service - Steel	140.06	1	16.95	50.0	As Requested	As Requested
H 20-44	Inventory	Axle Load	3.623	Service - Steel	72.46	1	16.95	50.0	As Requested	As Requested
	Operating	Axle Load	6.050	Service - Steel	121.00	1	16.95	50.0	As Requested	As Requested

Note:
"N/A" indicates not applicable
"**" indicates not available

Reactions
Live Load H 20-44

Support	Stage 1 DL (kip)	Stage 2 DL (kip)	+(LL+I) (kip)	-(LL+I) (kip)	Reaction +IF (%)	Reaction -IF (%)
1	24.43	N/A	22.16(L)	0.00(L)	30.000	0.000
2	24.45	N/A	22.16(L)	0.00(L)	30.000	0.000

Note:
"N/A" indicates not applicable
"**" indicates not available

LL Codes:
(T) Truck load controls
(L) Lane load controls

Note:
Impact and distribution factors included in above live load reactions.

Moments
Live Load H 20-44

Span 1

Location (ft)	Percent	Stage 1 DL (kip-ft)	Stage 2 DL (kip-ft)	+(LL+I) (kip-ft)	-(LL+I) (kip-ft)	+Impact Factor (%)	-Impact Factor (%)
0.00	0.0	-0.00	N/A	-0.00(L)	-0.00(L)	**	**
3.39	10.0	74.22	N/A	92.00(T)	0.00(L)	**	**
6.78	20.0	132.01	N/A	161.50(T)	0.00(L)	**	**
10.17	30.0	173.37	N/A	208.48(T)	0.00(L)	**	**
13.56	40.0	198.28	N/A	232.95(T)	0.00(L)	**	**
16.95	50.0	206.77	N/A	234.91(T)	0.00(L)	**	**
17.26	50.9	206.73	N/A	235.65(T)	0.00(L)	**	**
20.35	60.0	198.32	N/A	232.95(T)	0.00(L)	**	**
23.74	70.0	173.39	N/A	208.48(T)	0.00(L)	**	**
27.13	80.0	132.03	N/A	161.50(T)	0.00(L)	**	**
30.52	90.0	74.23	N/A	92.00(T)	0.00(L)	**	**
33.91	100.0	0.00	N/A	0.00(L)	0.00(L)	**	**

Note:
"N/A" indicates not applicable
"**" indicates not available

LL Codes:
(T) Truck load controls
(L) Lane load controls

Note:
Impact and distribution factors included in above live load moments.

Shears
Live Load H 20-44

Span 1

Location (ft)	Percent	Stage 1 DL (kip)	Stage 2 DL (kip)	+(LL+I) (kip)	-(LL+I) (kip)	+Impact Factor (%)	-Impact Factor (%)
0.00	0.0	24.31	N/A	26.32(T)	-0.00(L)	**	**
3.39	10.0	19.47	N/A	27.13(T)	-2.66(T)	**	**
6.78	20.0	14.62	N/A	23.81(T)	-5.31(T)	**	**
10.17	30.0	9.77	N/A	20.49(T)	-7.97(T)	**	**
13.56	40.0	4.93	N/A	17.17(T)	-10.62(T)	**	**
16.95	50.0	0.08	N/A	13.86(T)	-13.86(T)	**	**
17.26	50.9	-0.35	N/A	13.56(T)	-14.15(T)	**	**
20.35	60.0	-4.93	N/A	10.62(T)	-17.17(T)	**	**
23.74	70.0	-9.77	N/A	7.97(T)	-20.49(T)	**	**
27.13	80.0	-14.62	N/A	5.31(T)	-23.81(T)	**	**
30.52	90.0	-19.47	N/A	2.66(T)	-27.13(T)	**	**
33.91	100.0	-24.31	N/A	-0.00(L)	-26.32(T)	**	**

Note:
"N/A" indicates not applicable
"**" indicates not available

LL Codes:
(T) Truck load controls
(L) Lane load controls

Note:
Impact and distribution factors included in above live load shears.

Individual Vehicle Load Factor Rating Summary

Live Load		Vehicle Type	Rating Factor	Controls	Capacity (Ton)	Location Span	(ft)	Percent	Impact	Lane
HS 20-44	Inventory	Lane	4.193	Service - Steel	150.96	1	16.95	50.0	As Requested	As Requested
	Operating	Lane	7.003	Service - Steel	252.10	1	16.95	50.0	As Requested	As Requested
HS 20-44	Inventory	Axle Load	3.031	Service - Steel	109.12	1	20.35	60.0	As Requested	As Requested
	Operating	Axle Load	5.062	Service - Steel	182.24	1	20.35	60.0	As Requested	As Requested

Note:
"N/A" indicates not applicable
"**" indicates not available

Reactions
Live Load HS 20-44

Support	Stage 1 DL (kip)	Stage 2 DL (kip)	+(LL+I) (kip)	-(LL+I) (kip)	Reaction +IF (%)	Reaction -IF (%)
1	24.43	N/A	31.39(T)	0.00(L)	30.000	0.000
2	24.45	N/A	31.39(T)	0.00(L)	30.000	0.000

Note:
"N/A" indicates not applicable
"**" indicates not available

LL Codes:
(T) Truck load controls
(L) Lane load controls

Note:
Impact and distribution factors included in above live load reactions.

Moments
Live Load HS 20-44

Span 1

Location (ft)	Percent	Stage 1 DL (kip-ft)	Stage 2 DL (kip-ft)	+(LL+I) (kip-ft)	-(LL+I) (kip-ft)	+Impact Factor (%)	-Impact Factor (%)
0.00	0.0	-0.00	N/A	-0.00(L)	-0.00(L)	**	**
3.39	10.0	74.22	N/A	126.57(T)	0.00(L)	**	**
6.78	20.0	132.01	N/A	213.79(T)	0.00(L)	**	**
10.17	30.0	173.37	N/A	266.65(T)	0.00(L)	**	**
13.56	40.0	198.28	N/A	283.50(T)	0.00(L)	**	**
16.95	50.0	206.77	N/A	274.15(T)	0.00(L)	**	**
17.26	50.9	206.73	N/A	276.47(T)	0.00(L)	**	**
20.35	60.0	198.32	N/A	283.50(T)	0.00(L)	**	**
23.74	70.0	173.39	N/A	266.65(T)	0.00(L)	**	**
27.13	80.0	132.03	N/A	213.79(T)	0.00(L)	**	**
30.52	90.0	74.23	N/A	126.57(T)	0.00(L)	**	**
33.91	100.0	0.00	N/A	0.00(L)	0.00(L)	**	**

Note:
"N/A" indicates not applicable
"**" indicates not available

LL Codes:
(T) Truck load controls
(L) Lane load controls

Note:
Impact and distribution factors included in above live load moments.

Shears
Live Load HS 20-44

Span 1

Location (ft)	Percent	Stage 1 DL (kip)	Stage 2 DL (kip)	+(LL+I) (kip)	-(LL+I) (kip)	+Impact Factor (%)	-Impact Factor (%)
0.00	0.0	24.31	N/A	42.42(T)	-0.00(L)	**	**
3.39	10.0	19.47	N/A	37.33(T)	-2.66(T)	**	**
6.78	20.0	14.62	N/A	31.52(T)	-5.31(T)	**	**
10.17	30.0	9.77	N/A	26.21(T)	-7.97(T)	**	**
13.56	40.0	4.93	N/A	20.90(T)	-10.62(T)	**	**
16.95	50.0	0.08	N/A	15.59(T)	-15.59(T)	**	**
17.26	50.9	-0.35	N/A	15.12(T)	-16.06(T)	**	**
20.35	60.0	-4.93	N/A	10.62(T)	-20.90(T)	**	**
23.74	70.0	-9.77	N/A	7.97(T)	-26.21(T)	**	**
27.13	80.0	-14.62	N/A	5.31(T)	-31.52(T)	**	**
30.52	90.0	-19.47	N/A	2.66(T)	-37.33(T)	**	**
33.91	100.0	-24.31	N/A	-0.00(L)	-42.42(T)	**	**

Note:
"N/A" indicates not applicable
"**" indicates not available

LL Codes:
(T) Truck load controls
(L) Lane load controls

Note:
Impact and distribution factors included in above live load shears.

Cross Section Properties topic is not available for the specified analysis engine!

Report by Action: ☑ **Flexure** ☑ **Shear** ☑ **Overload** ☑ **Critical**

Detailed Rating Results
H 20-44
Axle Load
Impact: As Requested
Lane: As Requested

Span 1

Location (ft)	Percent	Limit State	Units	Capacity	DL	LL	Inventory Rating Factor	Inventory Load Rating (Ton)	Operating Rating Factor	Operating Load Rating (Ton)
0.00	0.0	Flexure	KIP-FT	2722.68	0.00	0.00	99.000	1980.00	99.000	1980.00
0.00	**0.0**	**Shear**	**KIPS**	**370.61**	**24.31**	**26.32**	**5.933**	**118.66**	**9.908**	**198.17**
0.00	0.0	Overload	KSI	-33.00	-0.00	-0.00	99.000	1980.00	99.000	1980.00
3.39	10.0	Flexure	KIP-FT	2722.68	74.22	92.00	13.148	262.96	21.957	439.15
3.39	**10.0**	**Shear**	**KIPS**	**370.61**	**19.47**	**27.13**	**5.862**	**117.24**	**9.790**	**195.80**
3.39	10.0	Overload	KSI	33.00	2.17	1.64	10.669	213.39	17.818	356.35
6.78	20.0	Flexure	KIP-FT	2722.68	132.01	161.50	7.276	145.52	12.151	243.02
6.78	20.0	Shear	KIPS	370.61	14.62	23.81	6.801	136.02	11.358	227.16
6.78	**20.0**	**Overload**	**KSI**	**33.00**	**3.87**	**2.87**	**5.726**	**114.51**	**9.562**	**191.24**
10.17	30.0	Flexure	KIP-FT	2722.68	173.37	208.48	5.518	110.35	9.214	184.29
10.17	30.0	Shear	KIPS	370.61	9.77	20.49	8.044	160.89	13.434	268.68
10.17	**30.0**	**Overload**	**KSI**	**33.00**	**5.08**	**3.71**	**4.240**	**84.80**	**7.081**	**141.62**
13.56	40.0	Flexure	KIP-FT	2722.68	198.28	232.95	4.874	97.48	8.139	162.79
13.56	40.0	Shear	KIPS	370.61	4.93	17.17	9.768	195.36	16.313	326.25
13.56	**40.0**	**Overload**	**KSI**	**33.00**	**5.81**	**4.15**	**3.689**	**73.78**	**6.161**	**123.22**
16.95	50.0	Flexure	KIP-FT	2722.68	206.77	234.91	4.812	96.23	8.035	160.71
16.95	50.0	Shear	KIPS	370.61	0.08	13.86	12.318	246.35	20.570	411.41
16.95	**50.0**	**Overload**	**KSI**	**33.00**	**6.05**	**4.18**	**3.623**	**72.46**	**6.050**	**121.00**
20.35	60.0	Flexure	KIP-FT	2722.68	198.32	232.95	4.874	97.48	8.139	162.79
20.35	60.0	Shear	KIPS	370.61	4.93	17.17	9.768	195.36	16.312	326.25
20.35	**60.0**	**Overload**	**KSI**	**33.00**	**5.81**	**4.15**	**3.689**	**73.78**	**6.161**	**123.21**
23.74	70.0	Flexure	KIP-FT	2722.68	173.39	208.48	5.518	110.35	9.214	184.28
23.74	70.0	Shear	KIPS	370.61	9.77	20.49	8.044	160.89	13.434	268.68
23.74	**70.0**	**Overload**	**KSI**	**33.00**	**5.08**	**3.71**	**4.240**	**84.80**	**7.081**	**141.61**

27.13	80.0	Flexure	KIP-FT	2722.68	132.03	161.50	7.276	145.52	12.151	243.02
27.13	80.0	Shear	KIPS	370.61	14.62	23.81	6.801	136.02	11.358	227.16
27.13	**80.0**	**Overload**	**KSI**	**33.00**	**3.87**	**2.87**	**5.726**	**114.51**	**9.562**	**191.24**
30.52	90.0	Flexure	KIP-FT	2722.68	74.23	92.00	13.148	262.96	21.957	439.14
30.52	**90.0**	**Shear**	**KIPS**	**370.61**	**19.47**	**27.13**	**5.862**	**117.24**	**9.790**	**195.80**
30.52	90.0	Overload	KSI	33.00	2.17	1.64	10.669	213.38	17.818	356.35
33.91	100.0	Flexure	KIP-FT	2722.68	0.00	0.00	99.000	1980.00	99.000	1980.00
33.91	**100.0**	**Shear**	**KIPS**	**370.61**	**24.31**	**26.32**	**5.933**	**118.66**	**9.908**	**198.16**
33.91	100.0	Overload	KSI	-33.00	-0.00	-0.00	99.000	1980.00	99.000	1980.00

Detailed Rating Results
H 20-44
Lane
Impact: As Requested
Lane: As Requested

Span 1

Location							Inventory Rating Factor	Inventory Load Rating (Ton)	Operating Rating Factor	Operating Load Rating (Ton)
(ft)	**Percent**	**Limit State**	**Units**	**Capacity**	**DL**	**LL**				
0.00	0.0	Flexure	KIP-FT	2722.68	0.00	0.00	99.000	1980.00	99.000	1980.00
0.00	**0.0**	**Shear**	**KIPS**	**370.61**	**24.31**	**24.64**	**6.337**	**126.73**	**10.582**	**211.65**
0.00	0.0	Overload	KSI	-33.00	-0.00	-0.00	99.000	1980.00	99.000	1980.00
3.39	10.0	Flexure	KIP-FT	2722.68	74.22	73.06	16.556	331.13	27.649	552.98
3.39	**10.0**	**Shear**	**KIPS**	**370.61**	**19.47**	**26.71**	**5.955**	**119.09**	**9.944**	**198.89**
3.39	10.0	Overload	KSI	33.00	2.17	1.30	13.435	268.70	22.436	448.73
6.78	20.0	Flexure	KIP-FT	2722.68	132.01	129.89	9.047	180.93	15.108	302.16
6.78	**20.0**	**Shear**	**KIPS**	**370.61**	**14.62**	**23.02**	**7.035**	**140.69**	**11.748**	**234.96**
6.78	20.0	Overload	KSI	33.00	3.87	2.31	7.119	142.38	11.889	237.77
10.17	30.0	Flexure	KIP-FT	2722.68	173.37	170.48	6.747	134.95	11.268	225.36
10.17	30.0	Shear	KIPS	370.61	9.77	19.51	8.448	168.96	14.108	282.16
10.17	**30.0**	**Overload**	**KSI**	**33.00**	**5.08**	**3.03**	**5.185**	**103.70**	**8.659**	**173.18**
13.56	40.0	Flexure	KIP-FT	2722.68	198.28	194.84	5.827	116.55	9.732	194.63
13.56	40.0	Shear	KIPS	370.61	4.93	16.19	10.364	207.29	17.308	346.17
13.56	**40.0**	**Overload**	**KSI**	**33.00**	**5.81**	**3.47**	**4.411**	**88.22**	**7.366**	**147.32**
16.95	50.0	Flexure	KIP-FT	2722.68	206.77	202.95	5.569	111.38	9.301	186.01

16.95	50.0	Shear	KIPS	370.61	0.08	13.04	13.089	261.78	21.859	437.18
16.95	**50.0**	**Overload**	**KSI**	**33.00**	**6.05**	**3.61**	**4.193**	**83.87**	**7.003**	**140.06**
20.35	60.0	Flexure	KIP-FT	2722.68	198.32	194.84	5.827	116.54	9.732	194.63
20.35	60.0	Shear	KIPS	370.61	4.93	16.19	10.364	207.28	17.308	346.16
20.35	**60.0**	**Overload**	**KSI**	**33.00**	**5.81**	**3.47**	**4.411**	**88.21**	**7.366**	**147.32**
23.74	70.0	Flexure	KIP-FT	2722.68	173.39	170.48	6.747	134.95	11.268	225.36
23.74	70.0	Shear	KIPS	370.61	9.77	19.51	8.448	168.96	14.108	282.16
23.74	**70.0**	**Overload**	**KSI**	**33.00**	**5.08**	**3.03**	**5.185**	**103.70**	**8.659**	**173.17**
27.13	80.0	Flexure	KIP-FT	2722.68	132.03	129.89	9.046	180.93	15.108	302.15
27.13	**80.0**	**Shear**	**KIPS**	**370.61**	**14.62**	**23.02**	**7.035**	**140.69**	**11.748**	**234.96**
27.13	80.0	Overload	KSI	33.00	3.87	2.31	7.119	142.38	11.888	237.77
30.52	90.0	Flexure	KIP-FT	2722.68	74.23	73.06	16.556	331.13	27.649	552.98
30.52	**90.0**	**Shear**	**KIPS**	**370.61**	**19.47**	**26.71**	**5.955**	**119.09**	**9.944**	**198.88**
30.52	90.0	Overload	KSI	33.00	2.17	1.30	13.435	268.70	22.436	448.73
33.91	100.0	Flexure	KIP-FT	2722.68	0.00	0.00	99.000	1980.00	99.000	1980.00
33.91	**100.0**	**Shear**	**KIPS**	**370.61**	**24.31**	**24.64**	**6.337**	**126.73**	**10.582**	**211.64**
33.91	100.0	Overload	KSI	-33.00	-0.00	-0.00	99.000	1980.00	99.000	1980.00

Detailed Rating Results
HS 20-44
Axle Load
Impact: As Requested
Lane: As Requested

Span 1

Location							**Inventory Rating**	**Inventory Load Rating**	**Operating Rating**	**Operating Load Rating**
(ft)	**Percent**	**Limit State**	**Units**	**Capacity**	**DL**	**LL**	**Factor**	**(Ton)**	**Factor**	**(Ton)**
0.00	0.0	Flexure	KIP-FT	2722.68	0.00	0.00	99.000	3564.00	99.000	3564.00
0.00	**0.0**	**Shear**	**KIPS**	**370.61**	**24.31**	**42.42**	**3.681**	**132.52**	**6.147**	**221.31**
0.00	0.0	Overload	KSI	-33.00	-0.00	-0.00	99.000	3564.00	99.000	3564.00
3.39	10.0	Flexure	KIP-FT	2722.68	74.22	126.57	9.557	344.06	15.960	574.57
3.39	**10.0**	**Shear**	**KIPS**	**370.61**	**19.47**	**37.33**	**4.261**	**153.40**	**7.116**	**256.18**
3.39	10.0	Overload	KSI	33.00	2.17	2.25	7.755	279.19	12.951	466.25
6.78	20.0	Flexure	KIP-FT	2722.68	132.01	213.79	5.496	197.87	9.179	330.45
6.78	20.0	Shear	KIPS	370.61	14.62	31.52	5.138	184.96	8.580	308.88
6.78	**20.0**	**Overload**	**KSI**	**33.00**	**3.87**	**3.81**	**4.325**	**155.71**	**7.223**	**260.04**

10.17	30.0	Flexure	KIP-FT	2722.68	173.37	266.65	4.314	155.30	7.204	259.35
10.17	30.0	Shear	KIPS	370.61	9.77	26.21	6.289	226.42	10.503	378.12
10.17	**30.0**	**Overload**	**KSI**	**33.00**	**5.08**	**4.75**	**3.315**	**119.34**	**5.536**	**199.30**
13.56	40.0	Flexure	KIP-FT	2722.68	198.28	283.50	4.005	144.17	6.688	240.77
13.56	40.0	Shear	KIPS	370.61	4.93	20.90	8.026	288.95	13.404	482.54
13.56	**40.0**	**Overload**	**KSI**	**33.00**	**5.81**	**5.05**	**3.031**	**109.13**	**5.062**	**182.25**
16.95	50.0	Flexure	KIP-FT	2722.68	206.77	274.15	4.123	148.43	6.885	247.88
16.95	50.0	Shear	KIPS	370.61	0.08	15.59	10.946	394.07	18.281	658.10
16.95	**50.0**	**Overload**	**KSI**	**33.00**	**6.05**	**4.88**	**3.104**	**111.76**	**5.184**	**186.63**
20.35	60.0	Flexure	KIP-FT	2722.68	198.32	283.50	4.005	144.17	6.688	240.77
20.35	60.0	Shear	KIPS	370.61	4.93	20.90	8.026	288.94	13.404	482.53
20.35	**60.0**	**Overload**	**KSI**	**33.00**	**5.81**	**5.05**	**3.031**	**109.12**	**5.062**	**182.24**
23.74	70.0	Flexure	KIP-FT	2722.68	173.39	266.65	4.314	155.30	7.204	259.35
23.74	70.0	Shear	KIPS	370.61	9.77	26.21	6.289	226.42	10.503	378.11
23.74	**70.0**	**Overload**	**KSI**	**33.00**	**5.08**	**4.75**	**3.315**	**119.34**	**5.536**	**199.29**
27.13	80.0	Flexure	KIP-FT	2722.68	132.03	213.79	5.496	197.87	9.179	330.45
27.13	80.0	Shear	KIPS	370.61	14.62	31.52	5.138	184.96	8.580	308.88
27.13	**80.0**	**Overload**	**KSI**	**33.00**	**3.87**	**3.81**	**4.325**	**155.71**	**7.223**	**260.03**
30.52	90.0	Flexure	KIP-FT	2722.68	74.23	126.57	9.557	344.05	15.960	574.57
30.52	**90.0**	**Shear**	**KIPS**	**370.61**	**19.47**	**37.33**	**4.261**	**153.40**	**7.116**	**256.18**
30.52	90.0	Overload	KSI	33.00	2.17	2.25	7.755	279.19	12.951	466.24
33.91	100.0	Flexure	KIP-FT	2722.68	0.00	0.00	99.000	3564.00	99.000	3564.00
33.91	**100.0**	**Shear**	**KIPS**	**370.61**	**24.31**	**42.42**	**3.681**	**132.52**	**6.147**	**221.30**
33.91	100.0	Overload	KSI	-33.00	-0.00	-0.00	99.000	3564.00	99.000	3564.00

Detailed Rating Results
HS 20-44
Lane
Impact: As Requested
Lane: As Requested

Span 1

Location							Inventory Rating	Inventory Load Rating	Operating Rating	Operating Load Rating
(ft)	**Percent**	**Limit State**	**Units**	**Capacity**	**DL**	**LL**	**Factor**	**(Ton)**	**Factor**	**(Ton)**
0.00	0.0	Flexure	KIP-FT	2722.68	0.00	0.00	99.000	3564.00	99.000	3564.00

0.00	**0.0**	**Shear**	**KIPS**	**370.61**	**24.31**	**24.64**	**6.337**	**228.12**	**10.582**	**380.96**
0.00	0.0	Overload	KSI	-33.00	-0.00	-0.00	99.000	3564.00	99.000	3564.00
3.39	10.0	Flexure	KIP-FT	2722.68	74.22	73.06	16.556	596.03	27.649	995.37
3.39	**10.0**	**Shear**	**KIPS**	**370.61**	**19.47**	**26.71**	**5.955**	**214.37**	**9.944**	**357.99**
3.39	10.0	Overload	KSI	33.00	2.17	1.30	13.435	483.66	22.436	807.71
6.78	20.0	Flexure	KIP-FT	2722.68	132.01	129.89	9.047	325.68	15.108	543.88
6.78	**20.0**	**Shear**	**KIPS**	**370.61**	**14.62**	**23.02**	**7.035**	**253.25**	**11.748**	**422.92**
6.78	20.0	Overload	KSI	33.00	3.87	2.31	7.119	256.28	11.889	427.99
10.17	30.0	Flexure	KIP-FT	2722.68	173.37	170.48	6.747	242.91	11.268	405.65
10.17	30.0	Shear	KIPS	370.61	9.77	19.51	8.448	304.13	14.108	507.89
10.17	**30.0**	**Overload**	**KSI**	**33.00**	**5.08**	**3.03**	**5.185**	**186.66**	**8.659**	**311.72**
13.56	40.0	Flexure	KIP-FT	2722.68	198.28	194.84	5.827	209.79	9.732	350.34
13.56	40.0	Shear	KIPS	370.61	4.93	16.19	10.364	373.11	17.308	623.10
13.56	**40.0**	**Overload**	**KSI**	**33.00**	**5.81**	**3.47**	**4.411**	**158.79**	**7.366**	**265.18**
16.95	50.0	Flexure	KIP-FT	2722.68	206.77	202.95	5.569	200.49	9.301	334.82
16.95	50.0	Shear	KIPS	370.61	0.08	13.04	13.089	471.21	21.859	786.92
16.95	**50.0**	**Overload**	**KSI**	**33.00**	**6.05**	**3.61**	**4.193**	**150.96**	**7.003**	**252.10**
20.35	60.0	Flexure	KIP-FT	2722.68	198.32	194.84	5.827	209.78	9.732	350.33
20.35	60.0	Shear	KIPS	370.61	4.93	16.19	10.364	373.11	17.308	623.09
20.35	**60.0**	**Overload**	**KSI**	**33.00**	**5.81**	**3.47**	**4.411**	**158.78**	**7.366**	**265.17**
23.74	70.0	Flexure	KIP-FT	2722.68	173.39	170.48	6.747	242.90	11.268	405.65
23.74	70.0	Shear	KIPS	370.61	9.77	19.51	8.448	304.13	14.108	507.89
23.74	**70.0**	**Overload**	**KSI**	**33.00**	**5.08**	**3.03**	**5.185**	**186.65**	**8.659**	**311.71**
27.13	80.0	Flexure	KIP-FT	2722.68	132.03	129.89	9.046	325.67	15.108	543.87
27.13	**80.0**	**Shear**	**KIPS**	**370.61**	**14.62**	**23.02**	**7.035**	**253.25**	**11.748**	**422.92**
27.13	80.0	Overload	KSI	33.00	3.87	2.31	7.119	256.28	11.888	427.98
30.52	90.0	Flexure	KIP-FT	2722.68	74.23	73.06	16.556	596.03	27.649	995.37
30.52	**90.0**	**Shear**	**KIPS**	**370.61**	**19.47**	**26.71**	**5.955**	**214.37**	**9.944**	**357.99**
30.52	90.0	Overload	KSI	33.00	2.17	1.30	13.435	483.66	22.436	807.71
33.91	100.0	Flexure	KIP-FT	2722.68	0.00	0.00	99.000	3564.00	99.000	3564.00
33.91	**100.0**	**Shear**	**KIPS**	**370.61**	**24.31**	**24.64**	**6.337**	**228.12**	**10.582**	**380.96**
33.91	100.0	Overload	KSI	-33.00	-0.00	-0.00	99.000	3564.00	99.000	3564.00

Bridge Name: 1031529
NBI Structure ID: 1031529
Bridge ID: 1031529

Analyzed By: BrR
Analyze Date: Tuesday, April 15, 2014 10:54:17
Analysis Engine: AASHTO LFR Engine Version 6.5.0.3001
Analysis Preference Setting: None

Report By: brr
Report Date: Tuesday, April 15, 2014 11:13:07

Structure Definition Name: Span 2 (NB)
Member Name: G1 (S10 plan designation)
Member Alternative Name: 5% Section Loss

Load Factor Rating Summary

Live Load		Rating Factor	Controls	Capacity (Ton)	Location Span	Location (ft)	Location Percent	Impact	Lane
H 20-44	Inventory	2.194	Service - Steel	43.89	1	31.85	50.0	As Requested	As Requested
	Operating	3.665	Service - Steel	73.30	1	31.85	50.0	As Requested	As Requested
HS 20-44	Inventory	1.548	Service - Steel	55.72	1	31.85	50.0	As Requested	As Requested
	Operating	2.585	Service - Steel	93.06	1	31.85	50.0	As Requested	As Requested

Note:
"N/A" indicates not applicable
"**" indicates not available

Individual Vehicle Load Factor Rating Summary

Live Load		Vehicle Type	Rating Factor	Controls	Capacity (Ton)	Location Span	(ft)	Percent	Impact	Lane
H 20-44	Inventory	Lane	2.194	Service - Steel	43.89	1	31.85	50.0	As Requested	As Requested
	Operating	Lane	3.665	Service - Steel	73.30	1	31.85	50.0	As Requested	As Requested
H 20-44	Inventory	Axle Load	2.309	Service - Steel	46.18	1	31.85	50.0	As Requested	As Requested
	Operating	Axle Load	3.856	Service - Steel	77.11	1	31.85	50.0	As Requested	As Requested

Note:
"N/A" indicates not applicable
"**" indicates not available

Reactions
Live Load H 20-44

Support	Stage 1 DL (kip)	Stage 2 DL (kip)	+(LL+I) (kip)	-(LL+I) (kip)	Reaction +IF (%)	Reaction -IF (%)
1	46.90	N/A	27.01(L)	0.00(L)	26.497	0.000
2	46.89	N/A	27.01(L)	0.00(L)	26.497	0.000

Note:
"N/A" indicates not applicable
"**" indicates not available

LL Codes:
(T) Truck load controls
(L) Lane load controls

Note:
Impact and distribution factors included in above live load reactions.

Moments
Live Load H 20-44

Span 1

Location (ft)	Percent	Stage 1 DL (kip-ft)	Stage 2 DL (kip-ft)	+(LL+I) (kip-ft)	-(LL+I) (kip-ft)	+Impact Factor (%)	-Impact Factor (%)
0.00	0.0	-0.00	N/A	-0.00(L)	-0.00(L)	**	**
6.37	10.0	268.83	N/A	177.68(L)	0.00(L)	**	**
7.35	11.5	305.03	N/A	201.51(L)	0.00(L)	**	**
12.74	20.0	478.98	N/A	315.87(L)	0.00(L)	**	**
19.11	30.0	629.40	N/A	414.58(L)	0.00(L)	**	**
19.87	31.2	643.30	N/A	423.69(L)	0.00(L)	**	**
25.48	40.0	719.18	N/A	473.81(L)	0.00(L)	**	**
31.85	50.0	749.08	N/A	493.55(L)	0.00(L)	**	**
38.22	60.0	719.24	N/A	473.81(L)	0.00(L)	**	**
41.78	65.6	676.48	N/A	445.54(L)	0.00(L)	**	**
44.59	70.0	629.20	N/A	414.58(L)	0.00(L)	**	**
50.96	80.0	478.85	N/A	315.87(L)	0.00(L)	**	**
56.35	88.5	304.96	N/A	201.51(L)	0.00(L)	**	**
57.33	90.0	268.77	N/A	177.68(L)	0.00(L)	**	**
63.70	100.0	0.00	N/A	0.00(L)	0.00(L)	**	**

Note:
"N/A" indicates not applicable
"**" indicates not available

LL Codes:
(T) Truck load controls
(L) Lane load controls

Note:
Impact and distribution factors included in above live load moments.

Shears
Live Load H 20-44

Span 1

Location (ft)	Percent	Stage 1 DL (kip)	Stage 2 DL (kip)	+(LL+I) (kip)	-(LL+I) (kip)	+Impact Factor (%)	-Impact Factor (%)
0.00	0.0	46.76	N/A	31.60(L)	-0.00(L)	**	**
6.37	10.0	37.64	N/A	32.46(L)	-2.60(T)	**	**
7.35	11.5	36.24	N/A	31.72(L)	-3.01(T)	**	**
12.74	20.0	28.30	N/A	27.74(L)	-5.25(T)	**	**
19.11	30.0	18.92	N/A	23.30(L)	-8.46(T)	**	**
19.87	31.2	17.81	N/A	22.79(L)	-8.87(T)	**	**
25.48	40.0	9.38	N/A	19.03(L)	-11.82(T)	**	**
31.85	50.0	0.01	N/A	15.14(T)	-15.14(T)	**	**
38.22	60.0	-9.37	N/A	11.82(T)	-19.03(L)	**	**
41.78	65.6	-14.62	N/A	9.96(T)	-21.43(L)	**	**
44.59	70.0	-18.91	N/A	8.46(T)	-23.30(L)	**	**
50.96	80.0	-28.29	N/A	5.25(T)	-27.74(L)	**	**
56.35	88.5	-36.23	N/A	3.01(T)	-31.72(L)	**	**
57.33	90.0	-37.63	N/A	2.60(T)	-32.46(L)	**	**
63.70	100.0	-46.75	N/A	-0.00(L)	-31.60(L)	**	**

Note:
"N/A" indicates not applicable
"**" indicates not available

LL Codes:
(T) Truck load controls
(L) Lane load controls

Note:
Impact and distribution factors included in above live load shears.

Individual Vehicle Load Factor Rating Summary

Live Load		Vehicle Type	Rating Factor	Controls	Capacity (Ton)	Location Span	Location (ft)	Location Percent	Impact	Lane
HS 20-44	Inventory	Lane	2.194	Service - Steel	79.00	1	31.85	50.0	As Requested	As Requested
	Operating	Lane	3.665	Service - Steel	131.93	1	31.85	50.0	As Requested	As Requested
HS 20-44	Inventory	Axle Load	1.548	Service - Steel	55.72	1	31.85	50.0	As Requested	As Requested
	Operating	Axle Load	2.585	Service - Steel	93.06	1	31.85	50.0	As Requested	As Requested

Note:
"N/A" indicates not applicable
"**" indicates not available

Reactions
Live Load HS 20-44

Support	Stage 1 DL (kip)	Stage 2 DL (kip)	+(LL+I) (kip)	-(LL+I) (kip)	Reaction +IF (%)	Reaction -IF (%)
1	46.90	N/A	35.79(T)	0.00(L)	26.497	0.000
2	46.89	N/A	35.79(T)	0.00(L)	26.497	0.000

Note:
"N/A" indicates not applicable
"**" indicates not available

LL Codes:
(T) Truck load controls
(L) Lane load controls

Note:
Impact and distribution factors included in above live load reactions.

Moments
Live Load HS 20-44

Span 1

Location (ft)	Percent	Stage 1 DL (kip-ft)	Stage 2 DL (kip-ft)	+(LL+I) (kip-ft)	-(LL+I) (kip-ft)	+Impact Factor (%)	-Impact Factor (%)
0.00	0.0	-0.00	N/A	-0.00(L)	-0.00(L)	**	**
6.37	10.0	268.83	N/A	279.03(T)	0.00(L)	**	**
7.35	11.5	305.03	N/A	315.38(T)	0.00(L)	**	**
12.74	20.0	478.98	N/A	483.99(T)	0.00(L)	**	**
19.11	30.0	629.40	N/A	614.89(T)	0.00(L)	**	**
19.87	31.2	643.30	N/A	625.52(T)	0.00(L)	**	**
25.48	40.0	719.18	N/A	689.82(T)	0.00(L)	**	**
31.85	50.0	749.08	N/A	699.72(T)	0.00(L)	**	**
38.22	60.0	719.24	N/A	689.82(T)	0.00(L)	**	**
41.78	65.6	676.48	N/A	651.97(T)	0.00(L)	**	**
44.59	70.0	629.20	N/A	614.89(T)	0.00(L)	**	**
50.96	80.0	478.85	N/A	483.99(T)	0.00(L)	**	**
56.35	88.5	304.96	N/A	315.38(T)	0.00(L)	**	**
57.33	90.0	268.77	N/A	279.03(T)	0.00(L)	**	**
63.70	100.0	0.00	N/A	0.00(L)	0.00(L)	**	**

Note:
"N/A" indicates not applicable
"**" indicates not available

LL Codes:
(T) Truck load controls
(L) Lane load controls

Note:
Impact and distribution factors included in above live load moments.

Shears
Live Load HS 20-44

Span 1

Location (ft)	Percent	Stage 1 DL (kip)	Stage 2 DL (kip)	+(LL+I) (kip)	-(LL+I) (kip)	+Impact Factor (%)	-Impact Factor (%)
0.00	0.0	46.76	N/A	49.16(T)	-0.00(L)	**	**
6.37	10.0	37.64	N/A	44.12(T)	-2.60(T)	**	**
7.35	11.5	36.24	N/A	43.27(T)	-3.01(T)	**	**
12.74	20.0	28.30	N/A	38.57(T)	-5.25(T)	**	**
19.11	30.0	18.92	N/A	32.94(T)	-10.06(T)	**	**
19.87	31.2	17.81	N/A	32.26(T)	-10.70(T)	**	**
25.48	40.0	9.38	N/A	27.09(T)	-15.41(T)	**	**
31.85	50.0	0.01	N/A	21.12(T)	-21.12(T)	**	**
38.22	60.0	-9.37	N/A	15.41(T)	-27.09(T)	**	**
41.78	65.6	-14.62	N/A	12.43(T)	-30.43(T)	**	**
44.59	70.0	-18.91	N/A	10.06(T)	-32.94(T)	**	**
50.96	80.0	-28.29	N/A	5.25(T)	-38.57(T)	**	**
56.35	88.5	-36.23	N/A	3.01(T)	-43.27(T)	**	**
57.33	90.0	-37.63	N/A	2.60(T)	-44.12(T)	**	**
63.70	100.0	-46.75	N/A	-0.00(L)	-49.16(T)	**	**

Note:
"N/A" indicates not applicable
"**" indicates not available

LL Codes:
(T) Truck load controls
(L) Lane load controls

Note:
Impact and distribution factors included in above live load shears.

Cross Section Properties topic is not available for the specified analysis engine!

Report by Action: ☑ **Flexure** ☑ **Shear** ☑ **Overload** ☑ **Critical**

Detailed Rating Results
H 20-44
Axle Load
Impact: As Requested
Lane: As Requested

Span 1

Location (ft)	Percent	Limit State	Units	Capacity	DL	LL	Inventory Rating Factor	Inventory Load Rating (Ton)	Operating Rating Factor	Operating Load Rating (Ton)
0.00	0.0	Flexure	KIP-FT	2723.53	0.00	0.00	99.000	1980.00	99.000	1980.00
0.00	**0.0**	**Shear**	**KIPS**	**370.61**	**46.76**	**26.37**	**5.413**	**108.25**	**9.039**	**180.78**
0.00	0.0	Overload	KSI	-33.00	-0.00	-0.00	99.000	1980.00	99.000	1980.00
6.37	10.0	Flexure	KIP-FT	2723.53	268.83	176.12	6.209	124.18	10.369	207.38
6.37	10.0	Shear	KIPS	370.61	37.64	27.85	5.320	106.40	8.885	177.69
6.37	**10.0**	**Overload**	**KSI**	**33.00**	**7.87**	**3.13**	**4.486**	**89.73**	**7.492**	**149.84**
7.35	11.5	Flexure	KIP-FT	2723.53	305.03	199.56	5.371	107.42	8.970	179.39
7.35	11.5	Shear	KIPS	370.61	36.24	27.38	5.442	108.84	9.088	181.76
7.35	**11.5**	**Overload**	**KSI**	**33.00**	**8.93**	**3.55**	**3.781**	**75.61**	**6.314**	**126.27**
12.74	20.0	Flexure	KIP-FT	4045.27	478.98	311.09	5.068	101.36	8.463	169.26
12.74	20.0	Shear	KIPS	370.61	28.30	24.79	6.203	124.06	10.359	207.18
12.74	**20.0**	**Overload**	**KSI**	**33.00**	**7.90**	**3.27**	**4.298**	**85.95**	**7.177**	**143.54**
19.11	30.0	Flexure	KIP-FT	4045.27	629.40	404.91	3.671	73.42	6.131	122.61
19.11	30.0	Shear	KIPS	370.61	18.92	21.69	7.348	146.97	12.272	245.44
19.11	**30.0**	**Overload**	**KSI**	**33.00**	**10.38**	**4.25**	**2.953**	**59.05**	**4.931**	**98.62**
25.48	40.0	Flexure	KIP-FT	4045.27	719.18	457.59	3.131	62.62	5.229	104.57
25.48	40.0	Shear	KIPS	370.61	9.38	18.46	8.945	178.90	14.938	298.76
25.48	**40.0**	**Overload**	**KSI**	**33.00**	**11.86**	**4.81**	**2.428**	**48.57**	**4.055**	**81.11**
31.85	50.0	Flexure	KIP-FT	4045.27	749.08	469.12	3.016	60.32	5.036	100.73
31.85	50.0	Shear	KIPS	370.61	0.01	15.14	11.277	225.55	18.833	376.67
31.85	**50.0**	**Overload**	**KSI**	**33.00**	**12.35**	**4.93**	**2.309**	**46.18**	**3.856**	**77.11**
38.22	60.0	Flexure	KIP-FT	4045.27	719.24	457.59	3.131	62.62	5.229	104.57
38.22	60.0	Shear	KIPS	370.61	9.38	18.46	8.945	178.90	14.938	298.76
38.22	**60.0**	**Overload**	**KSI**	**33.00**	**11.86**	**4.81**	**2.428**	**48.56**	**4.055**	**81.10**

44.59	70.0	Flexure	KIP-FT	4045.27	629.20	404.91	3.671	73.43	6.131	122.62
44.59	70.0	Shear	KIPS	370.61	18.91	21.69	7.349	146.97	12.272	245.45
44.59	**70.0**	**Overload**	**KSI**	**33.00**	**10.37**	**4.25**	**2.953**	**59.06**	**4.932**	**98.63**
50.96	80.0	Flexure	KIP-FT	4045.27	478.85	311.09	5.068	101.36	8.464	169.27
50.96	80.0	Shear	KIPS	370.61	28.29	24.79	6.203	124.06	10.359	207.18
50.96	**80.0**	**Overload**	**KSI**	**33.00**	**7.89**	**3.27**	**4.298**	**85.96**	**7.178**	**143.55**
56.35	88.5	Flexure	KIP-FT	2723.53	304.96	199.56	5.371	107.43	8.970	179.40
56.35	88.5	Shear	KIPS	370.61	36.23	27.38	5.442	108.84	9.088	181.77
56.35	**88.5**	**Overload**	**KSI**	**33.00**	**8.93**	**3.55**	**3.781**	**75.62**	**6.314**	**126.28**
57.33	90.0	Flexure	KIP-FT	2723.53	268.77	176.12	6.209	124.19	10.370	207.39
57.33	90.0	Shear	KIPS	370.61	37.63	27.85	5.320	106.41	8.885	177.70
57.33	**90.0**	**Overload**	**KSI**	**33.00**	**7.87**	**3.13**	**4.487**	**89.73**	**7.493**	**149.86**
63.70	100.0	Flexure	KIP-FT	2723.53	0.00	0.00	99.000	1980.00	99.000	1980.00
63.70	**100.0**	**Shear**	**KIPS**	**370.61**	**46.75**	**26.37**	**5.413**	**108.26**	**9.040**	**180.79**
63.70	100.0	Overload	KSI	-33.00	-0.00	-0.00	99.000	1980.00	99.000	1980.00

Detailed Rating Results
H 20-44
Lane
Impact: As Requested
Lane: As Requested

Span 1

Location							**Inventory Rating**	**Inventory Load Rating**	**Operating Rating**	**Operating Load Rating**
(ft)	**Percent**	**Limit State**	**Units**	**Capacity**	**DL**	**LL**	**Factor**	**(Ton)**	**Factor**	**(Ton)**
0.00	0.0	Flexure	KIP-FT	2723.53	0.00	0.00	99.000	1980.00	99.000	1980.00
0.00	**0.0**	**Shear**	**KIPS**	**370.61**	**46.76**	**31.60**	**4.516**	**90.32**	**7.542**	**150.83**
0.00	0.0	Overload	KSI	-33.00	-0.00	-0.00	99.000	1980.00	99.000	1980.00
6.37	10.0	Flexure	KIP-FT	2723.53	268.83	177.68	6.155	123.09	10.278	205.56
6.37	10.0	Shear	KIPS	370.61	37.64	32.46	4.564	91.29	7.623	152.45
6.37	**10.0**	**Overload**	**KSI**	**33.00**	**7.87**	**3.16**	**4.447**	**88.94**	**7.426**	**148.53**
7.35	11.5	Flexure	KIP-FT	2723.53	305.03	201.51	5.319	106.38	8.883	177.66
7.35	11.5	Shear	KIPS	370.61	36.24	31.72	4.698	93.96	7.846	156.91
7.35	**11.5**	**Overload**	**KSI**	**33.00**	**8.93**	**3.59**	**3.744**	**74.88**	**6.252**	**125.05**
12.74	20.0	Flexure	KIP-FT	4045.27	478.98	315.87	4.991	99.82	8.335	166.70

12.74	20.0	Shear	KIPS	370.61	28.30	27.74	5.542	110.85	9.256	185.12
12.74	**20.0**	**Overload**	**KSI**	**33.00**	**7.90**	**3.32**	**4.232**	**84.65**	**7.068**	**141.36**
19.11	30.0	Flexure	KIP-FT	4045.27	629.40	414.58	3.585	71.71	5.988	119.75
19.11	30.0	Shear	KIPS	370.61	18.92	23.30	6.841	136.82	11.424	228.49
19.11	**30.0**	**Overload**	**KSI**	**33.00**	**10.38**	**4.36**	**2.884**	**57.67**	**4.816**	**96.32**
25.48	40.0	Flexure	KIP-FT	4045.27	719.18	473.81	3.024	60.47	5.050	100.99
25.48	40.0	Shear	KIPS	370.61	9.38	19.03	8.673	173.47	14.485	289.69
25.48	**40.0**	**Overload**	**KSI**	**33.00**	**11.86**	**4.98**	**2.345**	**46.90**	**3.917**	**78.33**
31.85	50.0	Flexure	KIP-FT	4045.27	749.08	493.55	2.866	57.33	4.787	95.74
31.85	50.0	Shear	KIPS	370.61	0.01	15.02	11.368	227.37	18.985	379.70
31.85	**50.0**	**Overload**	**KSI**	**33.00**	**12.35**	**5.18**	**2.194**	**43.89**	**3.665**	**73.30**
38.22	60.0	Flexure	KIP-FT	4045.27	719.24	473.81	3.024	60.47	5.049	100.99
38.22	60.0	Shear	KIPS	370.61	9.38	19.03	8.673	173.47	14.485	289.69
38.22	**60.0**	**Overload**	**KSI**	**33.00**	**11.86**	**4.98**	**2.345**	**46.90**	**3.916**	**78.33**
44.59	70.0	Flexure	KIP-FT	4045.27	629.20	414.58	3.586	71.71	5.988	119.76
44.59	70.0	Shear	KIPS	370.61	18.91	23.30	6.841	136.83	11.425	228.50
44.59	**70.0**	**Overload**	**KSI**	**33.00**	**10.37**	**4.36**	**2.884**	**57.68**	**4.817**	**96.33**
50.96	80.0	Flexure	KIP-FT	4045.27	478.85	315.87	4.991	99.82	8.335	166.71
50.96	80.0	Shear	KIPS	370.61	28.29	27.74	5.543	110.85	9.256	185.12
50.96	**80.0**	**Overload**	**KSI**	**33.00**	**7.89**	**3.32**	**4.233**	**84.66**	**7.069**	**141.37**
56.35	88.5	Flexure	KIP-FT	2723.53	304.96	201.51	5.319	106.39	8.883	177.67
56.35	88.5	Shear	KIPS	370.61	36.23	31.72	4.698	93.96	7.846	156.92
56.35	**88.5**	**Overload**	**KSI**	**33.00**	**8.93**	**3.59**	**3.744**	**74.89**	**6.253**	**125.06**
57.33	90.0	Flexure	KIP-FT	2723.53	268.77	177.68	6.155	123.09	10.278	205.57
57.33	90.0	Shear	KIPS	370.61	37.63	32.46	4.565	91.29	7.623	152.46
57.33	**90.0**	**Overload**	**KSI**	**33.00**	**7.87**	**3.16**	**4.447**	**88.94**	**7.427**	**148.54**
63.70	100.0	Flexure	KIP-FT	2723.53	0.00	0.00	99.000	1980.00	99.000	1980.00
63.70	**100.0**	**Shear**	**KIPS**	**370.61**	**46.75**	**31.60**	**4.516**	**90.32**	**7.542**	**150.84**
63.70	100.0	Overload	KSI	-33.00	-0.00	-0.00	99.000	1980.00	99.000	1980.00

Detailed Rating Results
HS 20-44
Axle Load
Impact: As Requested
Lane: As Requested

Span 1

Location (ft)	Percent	Limit State	Units	Capacity	DL	LL	Inventory Rating Factor	Inventory Load Rating (Ton)	Operating Rating Factor	Operating Load Rating (Ton)
0.00	0.0	Flexure	KIP-FT	2723.53	0.00	0.00	99.000	3564.00	99.000	3564.00
0.00	**0.0**	**Shear**	**KIPS**	**370.61**	**46.76**	**49.16**	**2.903**	**104.50**	**4.848**	**174.52**
0.00	0.0	Overload	KSI	-33.00	-0.00	-0.00	99.000	3564.00	99.000	3564.00
6.37	10.0	Flexure	KIP-FT	2723.53	268.83	279.03	3.919	141.09	6.545	235.61
6.37	10.0	Shear	KIPS	370.61	37.64	44.12	3.358	120.89	5.608	201.88
6.37	**10.0**	**Overload**	**KSI**	**33.00**	**7.87**	**4.96**	**2.832**	**101.94**	**4.729**	**170.24**
7.35	11.5	Flexure	KIP-FT	2723.53	305.03	315.38	3.399	122.35	5.676	204.32
7.35	11.5	Shear	KIPS	370.61	36.24	43.27	3.443	123.96	5.750	207.02
7.35	**11.5**	**Overload**	**KSI**	**33.00**	**8.93**	**5.61**	**2.392**	**86.12**	**3.995**	**143.82**
12.74	20.0	Flexure	KIP-FT	4045.27	478.98	483.99	3.257	117.26	5.440	195.83
12.74	20.0	Shear	KIPS	370.61	28.30	38.57	3.987	143.53	6.658	239.69
12.74	**20.0**	**Overload**	**KSI**	**33.00**	**7.90**	**5.08**	**2.762**	**99.44**	**4.613**	**166.07**
19.11	30.0	Flexure	KIP-FT	4045.27	629.40	614.89	2.417	87.03	4.037	145.33
19.11	30.0	Shear	KIPS	370.61	18.92	32.94	4.839	174.20	8.081	290.92
19.11	**30.0**	**Overload**	**KSI**	**33.00**	**10.38**	**6.46**	**1.944**	**70.00**	**3.247**	**116.89**
25.48	40.0	Flexure	KIP-FT	4045.27	719.18	689.82	2.077	74.77	3.468	124.86
25.48	40.0	Shear	KIPS	370.61	9.38	27.09	6.093	219.36	10.176	366.33
25.48	**40.0**	**Overload**	**KSI**	**33.00**	**11.86**	**7.25**	**1.611**	**57.99**	**2.690**	**96.84**
31.85	50.0	Flexure	KIP-FT	4045.27	749.08	699.72	2.022	72.79	3.377	121.56
31.85	50.0	Shear	KIPS	370.61	0.01	21.12	8.083	290.99	13.499	485.96
31.85	**50.0**	**Overload**	**KSI**	**33.00**	**12.35**	**7.35**	**1.548**	**55.72**	**2.585**	**93.06**
38.22	60.0	Flexure	KIP-FT	4045.27	719.24	689.82	2.077	74.77	3.468	124.86
38.22	60.0	Shear	KIPS	370.61	9.38	27.09	6.093	219.36	10.176	366.33
38.22	**60.0**	**Overload**	**KSI**	**33.00**	**11.86**	**7.25**	**1.611**	**57.99**	**2.690**	**96.84**
44.59	70.0	Flexure	KIP-FT	4045.27	629.20	614.89	2.418	87.03	4.037	145.35
44.59	70.0	Shear	KIPS	370.61	18.91	32.94	4.839	174.21	8.081	290.93
44.59	**70.0**	**Overload**	**KSI**	**33.00**	**10.37**	**6.46**	**1.945**	**70.01**	**3.248**	**116.91**
50.96	80.0	Flexure	KIP-FT	4045.27	478.85	483.99	3.257	117.27	5.440	195.84
50.96	80.0	Shear	KIPS	370.61	28.29	38.57	3.987	143.53	6.658	239.70
50.96	**80.0**	**Overload**	**KSI**	**33.00**	**7.89**	**5.08**	**2.762**	**99.45**	**4.613**	**166.08**
56.35	88.5	Flexure	KIP-FT	2723.53	304.96	315.38	3.399	122.35	5.676	204.33

56.35	88.5	Shear	KIPS	370.61	36.23	43.27	3.444	123.97	5.751	207.02
56.35	**88.5**	**Overload**	**KSI**	**33.00**	**8.93**	**5.61**	**2.392**	**86.13**	**3.995**	**143.83**
57.33	90.0	Flexure	KIP-FT	2723.53	268.77	279.03	3.919	141.09	6.545	235.62
57.33	90.0	Shear	KIPS	370.61	37.63	44.12	3.358	120.89	5.608	201.89
57.33	**90.0**	**Overload**	**KSI**	**33.00**	**7.87**	**4.96**	**2.832**	**101.95**	**4.729**	**170.25**
63.70	100.0	Flexure	KIP-FT	2723.53	0.00	0.00	99.000	3564.00	99.000	3564.00
63.70	**100.0**	**Shear**	**KIPS**	**370.61**	**46.75**	**49.16**	**2.903**	**104.51**	**4.848**	**174.53**
63.70	100.0	Overload	KSI	-33.00	-0.00	-0.00	99.000	3564.00	99.000	3564.00

Detailed Rating Results
HS 20-44
Lane
Impact: As Requested
Lane: As Requested

Span 1

Location							Inventory Rating	Inventory Load Rating	Operating Rating	Operating Load Rating
(ft)	**Percent**	**Limit State**	**Units**	**Capacity**	**DL**	**LL**	**Factor**	**(Ton)**	**Factor**	**(Ton)**
0.00	0.0	Flexure	KIP-FT	2723.53	0.00	0.00	99.000	3564.00	99.000	3564.00
0.00	**0.0**	**Shear**	**KIPS**	**370.61**	**46.76**	**31.60**	**4.516**	**162.57**	**7.542**	**271.50**
0.00	0.0	Overload	KSI	-33.00	-0.00	-0.00	99.000	3564.00	99.000	3564.00
6.37	10.0	Flexure	KIP-FT	2723.53	268.83	177.68	6.155	221.56	10.278	370.01
6.37	10.0	Shear	KIPS	370.61	37.64	32.46	4.564	164.32	7.623	274.41
6.37	**10.0**	**Overload**	**KSI**	**33.00**	**7.87**	**3.16**	**4.447**	**160.09**	**7.426**	**267.35**
7.35	11.5	Flexure	KIP-FT	2723.53	305.03	201.51	5.319	191.49	8.883	319.78
7.35	11.5	Shear	KIPS	370.61	36.24	31.72	4.698	169.13	7.846	282.44
7.35	**11.5**	**Overload**	**KSI**	**33.00**	**8.93**	**3.59**	**3.744**	**134.78**	**6.252**	**225.09**
12.74	20.0	Flexure	KIP-FT	4045.27	478.98	315.87	4.991	179.67	8.335	300.06
12.74	20.0	Shear	KIPS	370.61	28.30	27.74	5.542	199.53	9.256	333.21
12.74	**20.0**	**Overload**	**KSI**	**33.00**	**7.90**	**3.32**	**4.232**	**152.37**	**7.068**	**254.45**
19.11	30.0	Flexure	KIP-FT	4045.27	629.40	414.58	3.585	129.07	5.988	215.55
19.11	30.0	Shear	KIPS	370.61	18.92	23.30	6.841	246.28	11.424	411.28
19.11	**30.0**	**Overload**	**KSI**	**33.00**	**10.38**	**4.36**	**2.884**	**103.81**	**4.816**	**173.37**
25.48	40.0	Flexure	KIP-FT	4045.27	719.18	473.81	3.024	108.85	5.050	181.79
25.48	40.0	Shear	KIPS	370.61	9.38	19.03	8.673	312.24	14.485	521.44
25.48	**40.0**	**Overload**	**KSI**	**33.00**	**11.86**	**4.98**	**2.345**	**84.43**	**3.917**	**140.99**

31.85	50.0	Flexure	KIP-FT	4045.27	749.08	493.55	2.866	103.19	4.787	172.33
31.85	50.0	Shear	KIPS	370.61	0.01	15.02	11.368	409.26	18.985	683.46
31.85	**50.0**	**Overload**	**KSI**	**33.00**	**12.35**	**5.18**	**2.194**	**79.00**	**3.665**	**131.93**
38.22	60.0	Flexure	KIP-FT	4045.27	719.24	473.81	3.024	108.85	5.049	181.78
38.22	60.0	Shear	KIPS	370.61	9.38	19.03	8.673	312.24	14.485	521.44
38.22	**60.0**	**Overload**	**KSI**	**33.00**	**11.86**	**4.98**	**2.345**	**84.42**	**3.916**	**140.99**
44.59	70.0	Flexure	KIP-FT	4045.27	629.20	414.58	3.586	129.08	5.988	215.57
44.59	70.0	Shear	KIPS	370.61	18.91	23.30	6.841	246.29	11.425	411.30
44.59	**70.0**	**Overload**	**KSI**	**33.00**	**10.37**	**4.36**	**2.884**	**103.83**	**4.817**	**173.40**
50.96	80.0	Flexure	KIP-FT	4045.27	478.85	315.87	4.991	179.68	8.335	300.07
50.96	80.0	Shear	KIPS	370.61	28.29	27.74	5.543	199.53	9.256	333.22
50.96	**80.0**	**Overload**	**KSI**	**33.00**	**7.89**	**3.32**	**4.233**	**152.38**	**7.069**	**254.47**
56.35	88.5	Flexure	KIP-FT	2723.53	304.96	201.51	5.319	191.50	8.883	319.80
56.35	88.5	Shear	KIPS	370.61	36.23	31.72	4.698	169.13	7.846	282.45
56.35	**88.5**	**Overload**	**KSI**	**33.00**	**8.93**	**3.59**	**3.744**	**134.80**	**6.253**	**225.11**
57.33	90.0	Flexure	KIP-FT	2723.53	268.77	177.68	6.155	221.57	10.278	370.02
57.33	90.0	Shear	KIPS	370.61	37.63	32.46	4.565	164.33	7.623	274.43
57.33	**90.0**	**Overload**	**KSI**	**33.00**	**7.87**	**3.16**	**4.447**	**160.10**	**7.427**	**267.37**
63.70	100.0	Flexure	KIP-FT	2723.53	0.00	0.00	99.000	3564.00	99.000	3564.00
63.70	**100.0**	**Shear**	**KIPS**	**370.61**	**46.75**	**31.60**	**4.516**	**162.58**	**7.542**	**271.51**
63.70	100.0	Overload	KSI	-33.00	-0.00	-0.00	99.000	3564.00	99.000	3564.00

Bridge Name: 1031529
NBI Structure ID: 1031529
Bridge ID: 1031529

Analyzed By: BrR
Analyze Date: Tuesday, April 15, 2014 10:54:17
Analysis Engine: AASHTO LFR Engine Version 6.5.0.3001
Analysis Preference Setting: None

Report By: brr
Report Date: Tuesday, April 15, 2014 11:13:08

Structure Definition Name: Span 2 (NB)
Member Name: G2 (S11 plan designation)
Member Alternative Name: 5% Section Loss

Load Factor Rating Summary

Live Load		Rating Factor	Controls	Capacity (Ton)	Location Span	Location (ft)	Location Percent	Impact	Lane
H 20-44	Inventory	2.750	Service - Steel	54.99	1	31.85	50.0	As Requested	As Requested
	Operating	4.592	Service - Steel	91.84	1	31.85	50.0	As Requested	As Requested
HS 20-44	Inventory	1.940	Service - Steel	69.82	1	31.85	50.0	As Requested	As Requested
	Operating	3.239	Service - Steel	116.60	1	31.85	50.0	As Requested	As Requested

Note:
"N/A" indicates not applicable
"**" indicates not available

Individual Vehicle Load Factor Rating Summary

Live Load		Vehicle Type	Rating Factor	Controls	Capacity (Ton)	Location Span	(ft)	Percent	Impact	Lane
H 20-44	Inventory	Lane	2.750	Service - Steel	54.99	1	31.85	50.0	As Requested	As Requested
	Operating	Lane	4.592	Service - Steel	91.84	1	31.85	50.0	As Requested	As Requested
H 20-44	Inventory	Axle Load	2.893	Service - Steel	57.86	1	31.85	50.0	As Requested	As Requested
	Operating	Axle Load	4.831	Service - Steel	96.62	1	31.85	50.0	As Requested	As Requested

Note:
"N/A" indicates not applicable
"**" indicates not available

Reactions
Live Load H 20-44

Support	Stage 1 DL (kip)	Stage 2 DL (kip)	+(LL+I) (kip)	-(LL+I) (kip)	Reaction +IF (%)	Reaction -IF (%)
1	32.74	N/A	47.12(L)	0.00(L)	26.497	0.000
2	32.73	N/A	47.12(L)	0.00(L)	26.497	0.000

Note:
"N/A" indicates not applicable
"**" indicates not available

LL Codes:
(T) Truck load controls
(L) Lane load controls

Note:
Impact and distribution factors included in above live load reactions.

Moments
Live Load H 20-44

Span 1

Location (ft)	Percent	Stage 1 DL (kip-ft)	Stage 2 DL (kip-ft)	+(LL+I) (kip-ft)	-(LL+I) (kip-ft)	+Impact Factor (%)	-Impact Factor (%)
0.00	0.0	0.00	N/A	-0.00(L)	-0.00(L)	**	**
6.37	10.0	186.95	N/A	189.79(L)	0.00(L)	**	**
8.35	13.1	236.97	N/A	240.19(L)	0.00(L)	**	**
12.74	20.0	333.79	N/A	337.41(L)	0.00(L)	**	**
19.11	30.0	439.32	N/A	442.85(L)	0.00(L)	**	**
19.87	31.2	449.11	N/A	452.58(L)	0.00(L)	**	**
20.99	33.0	462.37	N/A	465.91(L)	0.00(L)	**	**
25.48	40.0	501.84	N/A	506.12(L)	0.00(L)	**	**
31.85	50.0	522.57	N/A	527.20(L)	0.00(L)	**	**
38.22	60.0	501.90	N/A	506.12(L)	0.00(L)	**	**
41.78	65.6	472.29	N/A	475.92(L)	0.00(L)	**	**
42.91	67.4	460.10	N/A	463.67(L)	0.00(L)	**	**
44.59	70.0	439.14	N/A	442.85(L)	0.00(L)	**	**
50.96	80.0	333.67	N/A	337.41(L)	0.00(L)	**	**
55.35	86.9	236.89	N/A	240.19(L)	0.00(L)	**	**
57.33	90.0	186.89	N/A	189.79(L)	0.00(L)	**	**
63.70	100.0	0.00	N/A	0.00(L)	0.00(L)	**	**

Note:
"N/A" indicates not applicable
"**" indicates not available

LL Codes:
(T) Truck load controls
(L) Lane load controls

Note:
Impact and distribution factors included in above live load moments.

Shears
Live Load H 20-44

Span 1

Location (ft)	Percent	Stage 1 DL (kip)	Stage 2 DL (kip)	+(LL+I) (kip)	-(LL+I) (kip)	+Impact Factor (%)	-Impact Factor (%)
0.00	0.0	32.47	N/A	44.00(L)	-0.00(L)	**	**
6.37	10.0	26.23	N/A	34.67(L)	-2.78(T)	**	**
8.35	13.1	24.29	N/A	33.08(L)	-3.65(T)	**	**
12.74	20.0	19.81	N/A	29.63(L)	-5.60(T)	**	**
19.11	30.0	13.32	N/A	24.89(L)	-9.04(T)	**	**
19.87	31.2	12.55	N/A	24.34(L)	-9.47(T)	**	**
20.99	33.0	11.24	N/A	23.54(L)	-10.11(T)	**	**
25.48	40.0	6.50	N/A	20.33(L)	-12.62(T)	**	**
31.85	50.0	0.00	N/A	16.17(T)	-16.17(T)	**	**
38.22	60.0	-6.49	N/A	12.62(T)	-20.33(L)	**	**
41.78	65.6	-10.13	N/A	10.64(T)	-22.89(L)	**	**
42.91	67.4	-11.43	N/A	10.00(T)	-23.68(L)	**	**
44.59	70.0	-13.31	N/A	9.04(T)	-24.89(L)	**	**
50.96	80.0	-19.81	N/A	5.60(T)	-29.63(L)	**	**
55.35	86.9	-24.28	N/A	3.65(T)	-33.08(L)	**	**
57.33	90.0	-26.22	N/A	2.78(T)	-34.67(L)	**	**
63.70	100.0	-32.46	N/A	-0.00(L)	-44.00(L)	**	**

Note:
"N/A" indicates not applicable
"**" indicates not available

LL Codes:
(T) Truck load controls
(L) Lane load controls

Note:
Impact and distribution factors included in above live load shears.

Individual Vehicle Load Factor Rating Summary

Live Load		Vehicle Type	Rating Factor	Controls	Capacity (Ton)	Location Span	(ft)	Percent	Impact	Lane
HS 20-44	Inventory	Lane	2.750	Service - Steel	98.99	1	31.85	50.0	As Requested	As Requested
	Operating	Lane	4.592	Service - Steel	165.31	1	31.85	50.0	As Requested	As Requested
HS 20-44	Inventory	Axle Load	1.940	Service - Steel	69.82	1	31.85	50.0	As Requested	As Requested
	Operating	Axle Load	3.239	Service - Steel	116.60	1	31.85	50.0	As Requested	As Requested

Note:
"N/A" indicates not applicable
"**" indicates not available

Reactions
Live Load HS 20-44

Support	Stage 1 DL (kip)	Stage 2 DL (kip)	+(LL+I) (kip)	-(LL+I) (kip)	Reaction +IF (%)	Reaction -IF (%)
1	32.74	N/A	62.43(T)	0.00(L)	26.497	0.000
2	32.73	N/A	62.43(T)	0.00(L)	26.497	0.000

Note:
"N/A" indicates not applicable
"**" indicates not available

LL Codes:
(T) Truck load controls
(L) Lane load controls

Note:
Impact and distribution factors included in above live load reactions.

Moments
Live Load HS 20-44

Span 1

Location (ft)	Percent	Stage 1 DL (kip-ft)	Stage 2 DL (kip-ft)	+(LL+I) (kip-ft)	-(LL+I) (kip-ft)	+Impact Factor (%)	-Impact Factor (%)
0.00	0.0	0.00	N/A	-0.00(L)	-0.00(L)	**	**
6.37	10.0	186.95	N/A	298.05(T)	0.00(L)	**	**
8.35	13.1	236.97	N/A	374.58(T)	0.00(L)	**	**
12.74	20.0	333.79	N/A	516.99(T)	0.00(L)	**	**
19.11	30.0	439.32	N/A	656.82(T)	0.00(L)	**	**
19.87	31.2	449.11	N/A	668.17(T)	0.00(L)	**	**
20.99	33.0	462.37	N/A	682.96(T)	0.00(L)	**	**
25.48	40.0	501.84	N/A	736.85(T)	0.00(L)	**	**
31.85	50.0	522.57	N/A	747.43(T)	0.00(L)	**	**
38.22	60.0	501.90	N/A	736.85(T)	0.00(L)	**	**
41.78	65.6	472.29	N/A	696.42(T)	0.00(L)	**	**
42.91	67.4	460.10	N/A	680.55(T)	0.00(L)	**	**
44.59	70.0	439.14	N/A	656.82(T)	0.00(L)	**	**
50.96	80.0	333.67	N/A	516.99(T)	0.00(L)	**	**
55.35	86.9	236.89	N/A	374.58(T)	0.00(L)	**	**
57.33	90.0	186.89	N/A	298.05(T)	0.00(L)	**	**
63.70	100.0	0.00	N/A	0.00(L)	0.00(L)	**	**

Note:
"N/A" indicates not applicable
"**" indicates not available

LL Codes:
(T) Truck load controls
(L) Lane load controls

Note:
Impact and distribution factors included in above live load moments.

Shears
Live Load HS 20-44

Span 1

Location (ft)	Percent	Stage 1 DL (kip)	Stage 2 DL (kip)	+(LL+I) (kip)	-(LL+I) (kip)	+Impact Factor (%)	-Impact Factor (%)
0.00	0.0	32.47	N/A	57.91(T)	-0.00(L)	**	**
6.37	10.0	26.23	N/A	47.13(T)	-2.78(T)	**	**
8.35	13.1	24.29	N/A	45.29(T)	-3.65(T)	**	**
12.74	20.0	19.81	N/A	41.20(T)	-5.60(T)	**	**
19.11	30.0	13.32	N/A	35.18(T)	-10.74(T)	**	**
19.87	31.2	12.55	N/A	34.46(T)	-11.42(T)	**	**
20.99	33.0	11.24	N/A	33.39(T)	-12.44(T)	**	**
25.48	40.0	6.50	N/A	28.94(T)	-16.46(T)	**	**
31.85	50.0	0.00	N/A	22.56(T)	-22.56(T)	**	**
38.22	60.0	-6.49	N/A	16.46(T)	-28.94(T)	**	**
41.78	65.6	-10.13	N/A	13.28(T)	-32.51(T)	**	**
42.91	67.4	-11.43	N/A	12.26(T)	-33.58(T)	**	**
44.59	70.0	-13.31	N/A	10.74(T)	-35.18(T)	**	**
50.96	80.0	-19.81	N/A	5.60(T)	-41.20(T)	**	**
55.35	86.9	-24.28	N/A	3.65(T)	-45.29(T)	**	**
57.33	90.0	-26.22	N/A	2.78(T)	-47.13(T)	**	**
63.70	100.0	-32.46	N/A	-0.00(L)	-57.91(T)	**	**

Note:
"N/A" indicates not applicable
"**" indicates not available

LL Codes:
(T) Truck load controls
(L) Lane load controls

Note:
Impact and distribution factors included in above live load shears.

Cross Section Properties topic is not available for the specified analysis engine!

Report by Action: ☑ **Flexure** ☑ **Shear** ☑ **Overload** ☑ **Critical**

Detailed Rating Results
H 20-44
Axle Load
Impact: As Requested
Lane: As Requested

Span 1

Location (ft)	Percent	Limit State	Units	Capacity	DL	LL	Inventory Rating Factor	Inventory Load Rating (Ton)	Operating Rating Factor	Operating Load Rating (Ton)
0.00	0.0	Flexure	KIP-FT	3072.72	0.00	0.00	99.000	1980.00	99.000	1980.00
0.00	**0.0**	**Shear**	**KIPS**	**386.05**	**32.47**	**37.89**	**4.180**	**83.59**	**6.980**	**139.60**
0.00	0.0	Overload	KSI	-33.00	-0.00	-0.00	99.000	1980.00	99.000	1980.00
6.37	10.0	Flexure	KIP-FT	3072.72	186.95	188.12	6.928	138.57	11.570	231.41
6.37	10.0	Shear	KIPS	386.05	26.23	29.75	5.449	108.99	9.100	182.01
6.37	**10.0**	**Overload**	**KSI**	**33.00**	**4.75**	**2.95**	**5.408**	**108.16**	**9.031**	**180.63**
8.35	13.1	Flexure	KIP-FT	3072.72	236.97	237.65	5.359	107.17	8.949	178.98
8.35	13.1	Shear	KIPS	386.05	24.29	28.74	5.682	113.64	9.489	189.77
8.35	**13.1**	**Overload**	**KSI**	**33.00**	**6.02**	**3.72**	**4.076**	**81.53**	**6.808**	**136.15**
12.74	20.0	Flexure	KIP-FT	4463.96	333.79	332.30	5.586	111.73	9.329	186.58
12.74	20.0	Shear	KIPS	386.05	19.81	26.48	6.268	125.35	10.467	209.34
12.74	**20.0**	**Overload**	**KSI**	**33.00**	**5.05**	**3.22**	**4.893**	**97.87**	**8.172**	**163.44**
19.11	30.0	Flexure	KIP-FT	4463.96	439.32	432.52	4.146	82.92	6.923	138.47
19.11	30.0	Shear	KIPS	386.05	13.32	23.17	7.331	146.63	12.243	244.86
19.11	**30.0**	**Overload**	**KSI**	**33.00**	**6.64**	**4.19**	**3.531**	**70.63**	**5.898**	**117.95**
25.48	40.0	Flexure	KIP-FT	4463.96	501.84	488.78	3.592	71.84	5.998	119.97
25.48	40.0	Shear	KIPS	386.05	6.50	19.71	8.822	176.45	14.733	294.67
25.48	**40.0**	**Overload**	**KSI**	**33.00**	**7.59**	**4.73**	**3.005**	**60.11**	**5.019**	**100.38**
31.85	50.0	Flexure	KIP-FT	4463.96	522.57	501.10	3.479	69.58	5.810	116.19
31.85	50.0	Shear	KIPS	386.05	0.00	16.17	10.998	219.95	18.366	367.32
31.85	**50.0**	**Overload**	**KSI**	**33.00**	**7.90**	**4.85**	**2.893**	**57.86**	**4.831**	**96.62**
38.22	60.0	Flexure	KIP-FT	4463.96	501.90	488.78	3.592	71.84	5.998	119.97
38.22	60.0	Shear	KIPS	386.05	6.50	19.71	8.822	176.45	14.733	294.67
38.22	**60.0**	**Overload**	**KSI**	**33.00**	**7.59**	**4.73**	**3.005**	**60.11**	**5.019**	**100.38**

44.59	70.0	Flexure	KIP-FT	4463.96	439.14	432.52	4.146	82.92	6.924	138.48
44.59	70.0	Shear	KIPS	386.05	13.31	23.17	7.332	146.63	12.244	244.87
44.59	**70.0**	**Overload**	**KSI**	**33.00**	**6.64**	**4.19**	**3.532**	**70.64**	**5.898**	**117.96**
50.96	80.0	Flexure	KIP-FT	4463.96	333.67	332.30	5.587	111.73	9.329	186.59
50.96	80.0	Shear	KIPS	386.05	19.81	26.48	6.268	125.36	10.467	209.34
50.96	**80.0**	**Overload**	**KSI**	**33.00**	**5.04**	**3.22**	**4.894**	**97.87**	**8.172**	**163.45**
55.35	86.9	Flexure	KIP-FT	3072.72	236.89	237.65	5.359	107.18	8.949	178.98
55.35	86.9	Shear	KIPS	386.05	24.28	28.74	5.682	113.64	9.489	189.78
55.35	**86.9**	**Overload**	**KSI**	**33.00**	**6.02**	**3.72**	**4.077**	**81.53**	**6.808**	**136.16**
57.33	90.0	Flexure	KIP-FT	3072.72	186.89	188.12	6.929	138.57	11.571	231.41
57.33	90.0	Shear	KIPS	386.05	26.22	29.75	5.450	108.99	9.101	182.02
57.33	**90.0**	**Overload**	**KSI**	**33.00**	**4.75**	**2.95**	**5.408**	**108.17**	**9.032**	**180.64**
63.70	100.0	Flexure	KIP-FT	3072.72	0.00	0.00	99.000	1980.00	99.000	1980.00
63.70	**100.0**	**Shear**	**KIPS**	**386.05**	**32.46**	**37.89**	**4.180**	**83.59**	**6.980**	**139.60**
63.70	100.0	Overload	KSI	-33.00	-0.00	-0.00	99.000	1980.00	99.000	1980.00

Detailed Rating Results
H 20-44
Lane
Impact: As Requested
Lane: As Requested

Span 1

Location							Inventory Rating	Inventory Load Rating	Operating Rating	Operating Load Rating
(ft)	**Percent**	**Limit State**	**Units**	**Capacity**	**DL**	**LL**	**Factor**	**(Ton)**	**Factor**	**(Ton)**
0.00	0.0	Flexure	KIP-FT	3072.72	0.00	0.00	99.000	1980.00	99.000	1980.00
0.00	**0.0**	**Shear**	**KIPS**	**386.05**	**32.47**	**44.00**	**3.600**	**72.00**	**6.012**	**120.24**
0.00	0.0	Overload	KSI	-33.00	-0.00	-0.00	99.000	1980.00	99.000	1980.00
6.37	10.0	Flexure	KIP-FT	3072.72	186.95	189.79	6.867	137.35	11.469	229.37
6.37	**10.0**	**Shear**	**KIPS**	**386.05**	**26.23**	**34.67**	**4.675**	**93.51**	**7.808**	**156.16**
6.37	10.0	Overload	KSI	33.00	4.75	2.97	5.360	107.21	8.952	179.04
8.35	13.1	Flexure	KIP-FT	3072.72	236.97	240.19	5.302	106.03	8.854	177.08
8.35	13.1	Shear	KIPS	386.05	24.29	33.08	4.936	98.73	8.244	164.87
8.35	**13.1**	**Overload**	**KSI**	**33.00**	**6.02**	**3.76**	**4.033**	**80.66**	**6.735**	**134.71**
12.74	20.0	Flexure	KIP-FT	4463.96	333.79	337.41	5.502	110.03	9.188	183.75

12.74	20.0	Shear	KIPS	386.05	19.81	29.63	5.600	112.00	9.352	187.05
12.74	**20.0**	**Overload**	**KSI**	**33.00**	**5.05**	**3.27**	**4.819**	**96.38**	**8.048**	**160.96**
19.11	30.0	Flexure	KIP-FT	4463.96	439.32	442.85	4.049	80.98	6.762	135.24
19.11	30.0	Shear	KIPS	386.05	13.32	24.89	6.825	136.50	11.398	227.96
19.11	**30.0**	**Overload**	**KSI**	**33.00**	**6.64**	**4.29**	**3.449**	**68.98**	**5.760**	**115.20**
25.48	40.0	Flexure	KIP-FT	4463.96	501.84	506.12	3.469	69.38	5.793	115.86
25.48	40.0	Shear	KIPS	386.05	6.50	20.33	8.555	171.09	14.286	285.72
25.48	**40.0**	**Overload**	**KSI**	**33.00**	**7.59**	**4.90**	**2.903**	**58.05**	**4.847**	**96.94**
31.85	50.0	Flexure	KIP-FT	4463.96	522.57	527.20	3.307	66.13	5.522	110.44
31.85	50.0	Shear	KIPS	386.05	0.00	16.04	11.086	221.72	18.514	370.28
31.85	**50.0**	**Overload**	**KSI**	**33.00**	**7.90**	**5.11**	**2.750**	**54.99**	**4.592**	**91.84**
38.22	60.0	Flexure	KIP-FT	4463.96	501.90	506.12	3.469	69.38	5.793	115.86
38.22	60.0	Shear	KIPS	386.05	6.50	20.33	8.555	171.09	14.286	285.72
38.22	**60.0**	**Overload**	**KSI**	**33.00**	**7.59**	**4.90**	**2.902**	**58.05**	**4.847**	**96.94**
44.59	70.0	Flexure	KIP-FT	4463.96	439.14	442.85	4.049	80.99	6.762	135.25
44.59	70.0	Shear	KIPS	386.05	13.31	24.89	6.825	136.51	11.398	227.96
44.59	**70.0**	**Overload**	**KSI**	**33.00**	**6.64**	**4.29**	**3.449**	**68.99**	**5.761**	**115.21**
50.96	80.0	Flexure	KIP-FT	4463.96	333.67	337.41	5.502	110.04	9.188	183.76
50.96	80.0	Shear	KIPS	386.05	19.81	29.63	5.600	112.01	9.353	187.05
50.96	**80.0**	**Overload**	**KSI**	**33.00**	**5.04**	**3.27**	**4.819**	**96.39**	**8.048**	**160.97**
55.35	86.9	Flexure	KIP-FT	3072.72	236.89	240.19	5.302	106.04	8.854	177.08
55.35	86.9	Shear	KIPS	386.05	24.28	33.08	4.936	98.73	8.244	164.88
55.35	**86.9**	**Overload**	**KSI**	**33.00**	**6.02**	**3.76**	**4.033**	**80.67**	**6.736**	**134.72**
57.33	90.0	Flexure	KIP-FT	3072.72	186.89	189.79	6.868	137.35	11.469	229.38
57.33	**90.0**	**Shear**	**KIPS**	**386.05**	**26.22**	**34.67**	**4.675**	**93.51**	**7.808**	**156.16**
57.33	90.0	Overload	KSI	33.00	4.75	2.97	5.361	107.21	8.952	179.05
63.70	100.0	Flexure	KIP-FT	3072.72	0.00	0.00	99.000	1980.00	99.000	1980.00
63.70	**100.0**	**Shear**	**KIPS**	**386.05**	**32.46**	**44.00**	**3.600**	**72.00**	**6.012**	**120.24**
63.70	100.0	Overload	KSI	-33.00	-0.00	-0.00	99.000	1980.00	99.000	1980.00

Detailed Rating Results
HS 20-44
Axle Load
Impact: As Requested
Lane: As Requested

Span 1

Location (ft)	Percent	Limit State	Units	Capacity	DL	LL	Inventory Rating Factor	Inventory Load Rating (Ton)	Operating Rating Factor	Operating Load Rating (Ton)
0.00	0.0	Flexure	KIP-FT	3072.72	0.00	0.00	99.000	3564.00	99.000	3564.00
0.00	**0.0**	**Shear**	**KIPS**	**386.05**	**32.47**	**57.91**	**2.735**	**98.46**	**4.567**	**164.42**
0.00	0.0	Overload	KSI	-33.00	-0.00	-0.00	99.000	3564.00	99.000	3564.00
6.37	10.0	Flexure	KIP-FT	3072.72	186.95	298.05	4.373	157.43	7.303	262.91
6.37	10.0	Shear	KIPS	386.05	26.23	47.13	3.440	123.82	5.744	206.78
6.37	**10.0**	**Overload**	**KSI**	**33.00**	**4.75**	**4.67**	**3.413**	**122.88**	**5.700**	**205.21**
8.35	13.1	Flexure	KIP-FT	3072.72	236.97	374.58	3.400	122.39	5.677	204.39
8.35	13.1	Shear	KIPS	386.05	24.29	45.29	3.605	129.77	6.020	216.71
8.35	**13.1**	**Overload**	**KSI**	**33.00**	**6.02**	**5.86**	**2.586**	**93.10**	**4.319**	**155.48**
12.74	20.0	Flexure	KIP-FT	4463.96	333.79	516.99	3.591	129.26	5.996	215.87
12.74	20.0	Shear	KIPS	386.05	19.81	41.20	4.028	145.02	6.728	242.19
12.74	**20.0**	**Overload**	**KSI**	**33.00**	**5.05**	**5.01**	**3.145**	**113.23**	**5.252**	**189.09**
19.11	30.0	Flexure	KIP-FT	4463.96	439.32	656.82	2.730	98.28	4.559	164.13
19.11	30.0	Shear	KIPS	386.05	13.32	35.18	4.828	173.80	8.062	290.24
19.11	**30.0**	**Overload**	**KSI**	**33.00**	**6.64**	**6.36**	**2.326**	**83.72**	**3.884**	**139.81**
25.48	40.0	Flexure	KIP-FT	4463.96	501.84	736.85	2.383	85.78	3.979	143.25
25.48	40.0	Shear	KIPS	386.05	6.50	28.94	6.010	216.36	10.036	361.31
25.48	**40.0**	**Overload**	**KSI**	**33.00**	**7.59**	**7.14**	**1.994**	**71.77**	**3.329**	**119.86**
31.85	50.0	Flexure	KIP-FT	4463.96	522.57	747.43	2.332	83.96	3.895	140.22
31.85	50.0	Shear	KIPS	386.05	0.00	22.56	7.883	283.77	13.164	473.90
31.85	**50.0**	**Overload**	**KSI**	**33.00**	**7.90**	**7.24**	**1.940**	**69.82**	**3.239**	**116.60**
38.22	60.0	Flexure	KIP-FT	4463.96	501.90	736.85	2.383	85.77	3.979	143.24
38.22	60.0	Shear	KIPS	386.05	6.50	28.94	6.010	216.36	10.036	361.31
38.22	**60.0**	**Overload**	**KSI**	**33.00**	**7.59**	**7.14**	**1.994**	**71.77**	**3.329**	**119.85**
44.59	70.0	Flexure	KIP-FT	4463.96	439.14	656.82	2.730	98.29	4.559	164.14
44.59	70.0	Shear	KIPS	386.05	13.31	35.18	4.828	173.80	8.062	290.25
44.59	**70.0**	**Overload**	**KSI**	**33.00**	**6.64**	**6.36**	**2.326**	**83.73**	**3.884**	**139.82**
50.96	80.0	Flexure	KIP-FT	4463.96	333.67	516.99	3.591	129.27	5.997	215.87
50.96	80.0	Shear	KIPS	386.05	19.81	41.20	4.029	145.03	6.728	242.20
50.96	**80.0**	**Overload**	**KSI**	**33.00**	**5.04**	**5.01**	**3.145**	**113.23**	**5.253**	**189.10**
55.35	86.9	Flexure	KIP-FT	3072.72	236.89	374.58	3.400	122.39	5.678	204.40

55.35	86.9	Shear	KIPS	386.05	24.28	45.29	3.605	129.77	6.020	216.72
55.35	**86.9**	**Overload**	**KSI**	**33.00**	**6.02**	**5.86**	**2.586**	**93.11**	**4.319**	**155.49**
57.33	90.0	Flexure	KIP-FT	3072.72	186.89	298.05	4.373	157.43	7.303	262.91
57.33	90.0	Shear	KIPS	386.05	26.22	47.13	3.440	123.83	5.744	206.79
57.33	**90.0**	**Overload**	**KSI**	**33.00**	**4.75**	**4.67**	**3.414**	**122.89**	**5.701**	**205.22**
63.70	100.0	Flexure	KIP-FT	3072.72	0.00	0.00	99.000	3564.00	99.000	3564.00
63.70	**100.0**	**Shear**	**KIPS**	**386.05**	**32.46**	**57.91**	**2.735**	**98.46**	**4.567**	**164.43**
63.70	100.0	Overload	KSI	-33.00	-0.00	-0.00	99.000	3564.00	99.000	3564.00

Detailed Rating Results
HS 20-44
Lane
Impact: As Requested
Lane: As Requested

Span 1

Location							Inventory Rating	Inventory Load Rating	Operating Rating	Operating Load Rating
(ft)	**Percent**	**Limit State**	**Units**	**Capacity**	**DL**	**LL**	**Factor**	**(Ton)**	**Factor**	**(Ton)**
0.00	0.0	Flexure	KIP-FT	3072.72	0.00	0.00	99.000	3564.00	99.000	3564.00
0.00	**0.0**	**Shear**	**KIPS**	**386.05**	**32.47**	**44.00**	**3.600**	**129.60**	**6.012**	**216.43**
0.00	0.0	Overload	KSI	-33.00	-0.00	-0.00	99.000	3564.00	99.000	3564.00
6.37	10.0	Flexure	KIP-FT	3072.72	186.95	189.79	6.867	247.23	11.469	412.87
6.37	**10.0**	**Shear**	**KIPS**	**386.05**	**26.23**	**34.67**	**4.675**	**168.31**	**7.808**	**281.08**
6.37	10.0	Overload	KSI	33.00	4.75	2.97	5.360	192.97	8.952	322.27
8.35	13.1	Flexure	KIP-FT	3072.72	236.97	240.19	5.302	190.86	8.854	318.74
8.35	13.1	Shear	KIPS	386.05	24.29	33.08	4.936	177.71	8.244	296.77
8.35	**13.1**	**Overload**	**KSI**	**33.00**	**6.02**	**3.76**	**4.033**	**145.19**	**6.735**	**242.47**
12.74	20.0	Flexure	KIP-FT	4463.96	333.79	337.41	5.502	198.06	9.188	330.76
12.74	20.0	Shear	KIPS	386.05	19.81	29.63	5.600	201.61	9.352	336.68
12.74	**20.0**	**Overload**	**KSI**	**33.00**	**5.05**	**3.27**	**4.819**	**173.49**	**8.048**	**289.73**
19.11	30.0	Flexure	KIP-FT	4463.96	439.32	442.85	4.049	145.76	6.762	243.43
19.11	30.0	Shear	KIPS	386.05	13.32	24.89	6.825	245.70	11.398	410.32
19.11	**30.0**	**Overload**	**KSI**	**33.00**	**6.64**	**4.29**	**3.449**	**124.17**	**5.760**	**207.36**
25.48	40.0	Flexure	KIP-FT	4463.96	501.84	506.12	3.469	124.88	5.793	208.55
25.48	40.0	Shear	KIPS	386.05	6.50	20.33	8.555	307.96	14.286	514.30
25.48	**40.0**	**Overload**	**KSI**	**33.00**	**7.59**	**4.90**	**2.903**	**104.49**	**4.847**	**174.50**

31.85	50.0	Flexure	KIP-FT	4463.96	522.57	527.20	3.307	119.04	5.522	198.79
31.85	50.0	Shear	KIPS	386.05	0.00	16.04	11.086	399.10	18.514	666.50
31.85	**50.0**	**Overload**	**KSI**	**33.00**	**7.90**	**5.11**	**2.750**	**98.99**	**4.592**	**165.31**
38.22	60.0	Flexure	KIP-FT	4463.96	501.90	506.12	3.469	124.88	5.793	208.55
38.22	60.0	Shear	KIPS	386.05	6.50	20.33	8.555	307.96	14.286	514.30
38.22	**60.0**	**Overload**	**KSI**	**33.00**	**7.59**	**4.90**	**2.902**	**104.49**	**4.847**	**174.49**
44.59	70.0	Flexure	KIP-FT	4463.96	439.14	442.85	4.049	145.77	6.762	243.44
44.59	70.0	Shear	KIPS	386.05	13.31	24.89	6.825	245.71	11.398	410.34
44.59	**70.0**	**Overload**	**KSI**	**33.00**	**6.64**	**4.29**	**3.449**	**124.18**	**5.761**	**207.38**
50.96	80.0	Flexure	KIP-FT	4463.96	333.67	337.41	5.502	198.07	9.188	330.77
50.96	80.0	Shear	KIPS	386.05	19.81	29.63	5.600	201.61	9.353	336.69
50.96	**80.0**	**Overload**	**KSI**	**33.00**	**5.04**	**3.27**	**4.819**	**173.50**	**8.048**	**289.75**
55.35	86.9	Flexure	KIP-FT	3072.72	236.89	240.19	5.302	190.87	8.854	318.75
55.35	86.9	Shear	KIPS	386.05	24.28	33.08	4.936	177.71	8.244	296.78
55.35	**86.9**	**Overload**	**KSI**	**33.00**	**6.02**	**3.76**	**4.033**	**145.20**	**6.736**	**242.49**
57.33	90.0	Flexure	KIP-FT	3072.72	186.89	189.79	6.868	247.24	11.469	412.88
57.33	**90.0**	**Shear**	**KIPS**	**386.05**	**26.22**	**34.67**	**4.675**	**168.32**	**7.808**	**281.09**
57.33	90.0	Overload	KSI	33.00	4.75	2.97	5.361	192.99	8.952	322.29
63.70	100.0	Flexure	KIP-FT	3072.72	0.00	0.00	99.000	3564.00	99.000	3564.00
63.70	**100.0**	**Shear**	**KIPS**	**386.05**	**32.46**	**44.00**	**3.600**	**129.60**	**6.012**	**216.43**
63.70	100.0	Overload	KSI	-33.00	-0.00	-0.00	99.000	3564.00	99.000	3564.00

Bridge Name: 1031529
NBI Structure ID: 1031529
Bridge ID: 1031529

Analyzed By: BrR
Analyze Date: Tuesday, April 15, 2014 10:54:17
Analysis Engine: AASHTO LFR Engine Version 6.5.0.3001
Analysis Preference Setting: None

Report By: brr
Report Date: Tuesday, April 15, 2014 11:13:08

Structure Definition Name: Span 2 (NB)
Member Name: G7 (S12 plan designation)
Member Alternative Name: 5% Section Loss

Load Factor Rating Summary

Live Load		Rating Factor	Controls	Capacity (Ton)	Location Span	Location (ft)	Location Percent	Impact	Lane
H 20-44	Inventory	2.208	Service - Steel	44.16	1	31.85	50.0	As Requested	As Requested
	Operating	3.687	Service - Steel	73.74	1	31.85	50.0	As Requested	As Requested
HS 20-44	Inventory	1.557	Service - Steel	56.06	1	31.85	50.0	As Requested	As Requested
	Operating	2.601	Service - Steel	93.63	1	31.85	50.0	As Requested	As Requested

Note:
"N/A" indicates not applicable
"**" indicates not available

Individual Vehicle Load Factor Rating Summary

Live Load		Vehicle Type	Rating Factor	Controls	Capacity (Ton)	Location Span	(ft)	Percent	Impact	Lane
H 20-44	Inventory	Lane	2.208	Service - Steel	44.16	1	31.85	50.0	As Requested	As Requested
	Operating	Lane	3.687	Service - Steel	73.74	1	31.85	50.0	As Requested	As Requested
H 20-44	Inventory	Axle Load	2.323	Service - Steel	46.46	1	31.85	50.0	As Requested	As Requested
	Operating	Axle Load	3.879	Service - Steel	77.58	1	31.85	50.0	As Requested	As Requested

Note:
"N/A" indicates not applicable
"**" indicates not available

Reactions
Live Load H 20-44

Support	Stage 1 DL (kip)	Stage 2 DL (kip)	+(LL+I) (kip)	-(LL+I) (kip)	Reaction +IF (%)	Reaction -IF (%)
1	47.25	N/A	27.01(L)	0.00(L)	26.497	0.000
2	47.25	N/A	27.01(L)	0.00(L)	26.497	0.000

Note:
"N/A" indicates not applicable
"**" indicates not available

LL Codes:
(T) Truck load controls
(L) Lane load controls

Note:
Impact and distribution factors included in above live load reactions.

Moments
Live Load H 20-44

Span 1

Location (ft)	Percent	Stage 1 DL (kip-ft)	Stage 2 DL (kip-ft)	+(LL+I) (kip-ft)	-(LL+I) (kip-ft)	+Impact Factor (%)	-Impact Factor (%)
0.00	0.0	-0.00	N/A	-0.00(L)	-0.00(L)	**	**
6.37	10.0	270.23	N/A	177.68(L)	0.00(L)	**	**
12.74	20.0	480.64	N/A	315.87(L)	0.00(L)	**	**
19.11	30.0	631.22	N/A	414.58(L)	0.00(L)	**	**
20.99	33.0	664.23	N/A	436.17(L)	0.00(L)	**	**
25.48	40.0	721.26	N/A	473.81(L)	0.00(L)	**	**
31.85	50.0	751.17	N/A	493.55(L)	0.00(L)	**	**
38.22	60.0	721.25	N/A	473.81(L)	0.00(L)	**	**
42.91	67.4	661.04	N/A	434.07(L)	0.00(L)	**	**
44.59	70.0	631.24	N/A	414.58(L)	0.00(L)	**	**
50.96	80.0	480.65	N/A	315.87(L)	0.00(L)	**	**
57.33	90.0	270.24	N/A	177.68(L)	0.00(L)	**	**
63.70	100.0	0.00	N/A	0.00(L)	0.00(L)	**	**

Note:
"N/A" indicates not applicable
"**" indicates not available

LL Codes:
(T) Truck load controls
(L) Lane load controls

Note:
Impact and distribution factors included in above live load moments.

Shears
Live Load H 20-44

Span 1

Location (ft)	Percent	Stage 1 DL (kip)	Stage 2 DL (kip)	+(LL+I) (kip)	-(LL+I) (kip)	+Impact Factor (%)	-Impact Factor (%)
0.00	0.0	47.12	N/A	31.60(L)	-0.00(L)	**	**
6.37	10.0	37.73	N/A	32.46(L)	-2.60(T)	**	**
12.74	20.0	28.34	N/A	27.74(L)	-5.25(T)	**	**
19.11	30.0	18.94	N/A	23.30(L)	-8.46(T)	**	**
20.99	33.0	16.17	N/A	22.04(L)	-9.46(T)	**	**
25.48	40.0	9.39	N/A	19.03(L)	-11.82(T)	**	**
31.85	50.0	-0.00	N/A	15.14(T)	-15.14(T)	**	**
38.22	60.0	-9.39	N/A	11.82(T)	-19.03(L)	**	**
42.91	67.4	-16.30	N/A	9.36(T)	-22.17(L)	**	**
44.59	70.0	-18.94	N/A	8.46(T)	-23.30(L)	**	**
50.96	80.0	-28.34	N/A	5.25(T)	-27.74(L)	**	**
57.33	90.0	-37.73	N/A	2.60(T)	-32.46(L)	**	**
63.70	100.0	-47.12	N/A	-0.00(L)	-31.60(L)	**	**

Note:
"N/A" indicates not applicable
"**" indicates not available

LL Codes:
(T) Truck load controls
(L) Lane load controls

Note:
Impact and distribution factors included in above live load shears.

Individual Vehicle Load Factor Rating Summary

Live Load		Vehicle Type	Rating Factor	Controls	Capacity (Ton)	Location Span	(ft)	Percent	Impact	Lane
HS 20-44	Inventory	Lane	2.208	Service - Steel	79.48	1	31.85	50.0	As Requested	As Requested
	Operating	Lane	3.687	Service - Steel	132.74	1	31.85	50.0	As Requested	As Requested
HS 20-44	Inventory	Axle Load	1.557	Service - Steel	56.06	1	31.85	50.0	As Requested	As Requested
	Operating	Axle Load	2.601	Service - Steel	93.63	1	31.85	50.0	As Requested	As Requested

Note:
"N/A" indicates not applicable
"**" indicates not available

Reactions
Live Load HS 20-44

Support	Stage 1 DL (kip)	Stage 2 DL (kip)	+(LL+I) (kip)	-(LL+I) (kip)	Reaction +IF (%)	Reaction -IF (%)
1	47.25	N/A	35.79(T)	0.00(L)	26.497	0.000
2	47.25	N/A	35.79(T)	0.00(L)	26.497	0.000

Note:
"N/A" indicates not applicable
"**" indicates not available

LL Codes:
(T) Truck load controls
(L) Lane load controls

Note:
Impact and distribution factors included in above live load reactions.

Moments
Live Load HS 20-44

Span 1

Location (ft)	Percent	Stage 1 DL (kip-ft)	Stage 2 DL (kip-ft)	+(LL+I) (kip-ft)	-(LL+I) (kip-ft)	+Impact Factor (%)	-Impact Factor (%)
0.00	0.0	-0.00	N/A	-0.00(L)	-0.00(L)	**	**
6.37	10.0	270.23	N/A	279.03(T)	0.00(L)	**	**
12.74	20.0	480.64	N/A	483.99(T)	0.00(L)	**	**
19.11	30.0	631.22	N/A	614.89(T)	0.00(L)	**	**
20.99	33.0	664.23	N/A	639.37(T)	0.00(L)	**	**
25.48	40.0	721.26	N/A	689.82(T)	0.00(L)	**	**
31.85	50.0	751.17	N/A	699.72(T)	0.00(L)	**	**
38.22	60.0	721.25	N/A	689.82(T)	0.00(L)	**	**
42.91	67.4	661.04	N/A	637.11(T)	0.00(L)	**	**
44.59	70.0	631.24	N/A	614.89(T)	0.00(L)	**	**
50.96	80.0	480.65	N/A	483.99(T)	0.00(L)	**	**
57.33	90.0	270.24	N/A	279.03(T)	0.00(L)	**	**
63.70	100.0	0.00	N/A	0.00(L)	0.00(L)	**	**

Note:
"N/A" indicates not applicable
"**" indicates not available

LL Codes:
(T) Truck load controls
(L) Lane load controls

Note:
Impact and distribution factors included in above live load moments.

Shears
Live Load HS 20-44

Span 1

Location (ft)	Percent	Stage 1 DL (kip)	Stage 2 DL (kip)	+(LL+I) (kip)	-(LL+I) (kip)	+Impact Factor (%)	-Impact Factor (%)
0.00	0.0	47.12	N/A	49.16(T)	-0.00(L)	**	**
6.37	10.0	37.73	N/A	44.12(T)	-2.60(T)	**	**
12.74	20.0	28.34	N/A	38.57(T)	-5.25(T)	**	**
19.11	30.0	18.94	N/A	32.94(T)	-10.06(T)	**	**
20.99	33.0	16.17	N/A	31.26(T)	-11.65(T)	**	**
25.48	40.0	9.39	N/A	27.09(T)	-15.41(T)	**	**
31.85	50.0	-0.00	N/A	21.12(T)	-21.12(T)	**	**
38.22	60.0	-9.39	N/A	15.41(T)	-27.09(T)	**	**
42.91	67.4	-16.30	N/A	11.48(T)	-31.44(T)	**	**
44.59	70.0	-18.94	N/A	10.06(T)	-32.94(T)	**	**
50.96	80.0	-28.34	N/A	5.25(T)	-38.57(T)	**	**
57.33	90.0	-37.73	N/A	2.60(T)	-44.12(T)	**	**
63.70	100.0	-47.12	N/A	-0.00(L)	-49.16(T)	**	**

Note:
"N/A" indicates not applicable
"**" indicates not available

LL Codes:
(T) Truck load controls
(L) Lane load controls

Note:
Impact and distribution factors included in above live load shears.

Cross Section Properties topic is not available for the specified analysis engine!

Report by Action: ☑ **Flexure** ☑ **Shear** ☑ **Overload** ☑ **Critical**

Detailed Rating Results
H 20-44
Axle Load
Impact: As Requested
Lane: As Requested

Span 1

Location (ft)	Percent	Limit State	Units	Capacity	DL	LL	Inventory Rating Factor	Inventory Load Rating (Ton)	Operating Rating Factor	Operating Load Rating (Ton)
0.00	0.0	Flexure	KIP-FT	4047.06	0.00	0.00	99.000	1980.00	99.000	1980.00
0.00	**0.0**	**Shear**	**KIPS**	**370.61**	**47.12**	**26.37**	**5.405**	**108.09**	**9.026**	**180.51**
0.00	0.0	Overload	KSI	-33.00	-0.00	-0.00	99.000	1980.00	99.000	1980.00
6.37	10.0	Flexure	KIP-FT	4047.06	270.23	176.12	9.666	193.32	16.142	322.84
6.37	**10.0**	**Shear**	**KIPS**	**370.61**	**37.73**	**27.85**	**5.318**	**106.37**	**8.882**	**177.63**
6.37	10.0	Overload	KSI	33.00	4.45	1.84	8.774	175.47	14.652	293.04
12.74	20.0	Flexure	KIP-FT	4047.06	480.64	311.09	5.067	101.34	8.462	169.24
12.74	20.0	Shear	KIPS	370.61	28.34	24.79	6.202	124.04	10.358	207.15
12.74	**20.0**	**Overload**	**KSI**	**33.00**	**7.92**	**3.24**	**4.326**	**86.53**	**7.225**	**144.50**
19.11	30.0	Flexure	KIP-FT	4047.06	631.22	404.91	3.670	73.41	6.130	122.59
19.11	30.0	Shear	KIPS	370.61	18.94	21.69	7.348	146.96	12.271	245.42
19.11	**30.0**	**Overload**	**KSI**	**33.00**	**10.41**	**4.22**	**2.972**	**59.44**	**4.963**	**99.26**
25.48	40.0	Flexure	KIP-FT	4047.06	721.26	457.59	3.130	62.60	5.227	104.54
25.48	40.0	Shear	KIPS	370.61	9.39	18.46	8.945	178.89	14.938	298.75
25.48	**40.0**	**Overload**	**KSI**	**33.00**	**11.89**	**4.77**	**2.443**	**48.87**	**4.080**	**81.61**
31.85	50.0	Flexure	KIP-FT	4047.06	751.17	469.12	3.015	60.30	5.035	100.70
31.85	50.0	Shear	KIPS	370.61	0.00	15.14	11.278	225.55	18.834	376.67
31.85	**50.0**	**Overload**	**KSI**	**33.00**	**12.38**	**4.89**	**2.323**	**46.46**	**3.879**	**77.58**
38.22	60.0	Flexure	KIP-FT	4047.06	721.25	457.59	3.130	62.60	5.227	104.54
38.22	60.0	Shear	KIPS	370.61	9.39	18.46	8.945	178.89	14.938	298.75
38.22	**60.0**	**Overload**	**KSI**	**33.00**	**11.89**	**4.77**	**2.443**	**48.87**	**4.080**	**81.61**
44.59	70.0	Flexure	KIP-FT	4047.06	631.24	404.91	3.670	73.41	6.129	122.59
44.59	70.0	Shear	KIPS	370.61	18.94	21.69	7.348	146.96	12.271	245.42
44.59	**70.0**	**Overload**	**KSI**	**33.00**	**10.41**	**4.22**	**2.972**	**59.43**	**4.963**	**99.26**

50.96	80.0	Flexure	KIP-FT	4047.06	480.65	311.09	5.067	101.34	8.462	169.24
50.96	80.0	Shear	KIPS	370.61	28.34	24.79	6.202	124.04	10.357	207.15
50.96	**80.0**	**Overload**	**KSI**	**33.00**	**7.92**	**3.24**	**4.326**	**86.53**	**7.225**	**144.50**
57.33	90.0	Flexure	KIP-FT	4047.06	270.24	176.12	9.666	193.32	16.142	322.84
57.33	**90.0**	**Shear**	**KIPS**	**370.61**	**37.73**	**27.85**	**5.318**	**106.37**	**8.882**	**177.63**
57.33	90.0	Overload	KSI	33.00	4.46	1.84	8.774	175.47	14.652	293.04
63.70	100.0	Flexure	KIP-FT	4047.06	0.00	0.00	99.000	1980.00	99.000	1980.00
63.70	**100.0**	**Shear**	**KIPS**	**370.61**	**47.12**	**26.37**	**5.405**	**108.09**	**9.026**	**180.51**
63.70	100.0	Overload	KSI	-33.00	-0.00	-0.00	99.000	1980.00	99.000	1980.00

Detailed Rating Results
H 20-44
Lane
Impact: As Requested
Lane: As Requested

Span 1

Location							Inventory Rating	Inventory Load Rating	Operating Rating	Operating Load Rating
(ft)	**Percent**	**Limit State**	**Units**	**Capacity**	**DL**	**LL**	**Factor**	**(Ton)**	**Factor**	**(Ton)**
0.00	0.0	Flexure	KIP-FT	4047.06	0.00	0.00	99.000	1980.00	99.000	1980.00
0.00	**0.0**	**Shear**	**KIPS**	**370.61**	**47.12**	**31.60**	**4.509**	**90.18**	**7.530**	**150.61**
0.00	0.0	Overload	KSI	-33.00	-0.00	-0.00	99.000	1980.00	99.000	1980.00
6.37	10.0	Flexure	KIP-FT	4047.06	270.23	177.68	9.581	191.62	16.000	320.00
6.37	**10.0**	**Shear**	**KIPS**	**370.61**	**37.73**	**32.46**	**4.563**	**91.26**	**7.620**	**152.40**
6.37	10.0	Overload	KSI	33.00	4.45	1.85	8.697	173.93	14.523	290.46
12.74	20.0	Flexure	KIP-FT	4047.06	480.64	315.87	4.990	99.81	8.334	166.68
12.74	20.0	Shear	KIPS	370.61	28.34	27.74	5.542	110.83	9.255	185.09
12.74	**20.0**	**Overload**	**KSI**	**33.00**	**7.92**	**3.29**	**4.261**	**85.22**	**7.116**	**142.31**
19.11	30.0	Flexure	KIP-FT	4047.06	631.22	414.58	3.585	71.69	5.986	119.73
19.11	30.0	Shear	KIPS	370.61	18.94	23.30	6.841	136.81	11.424	228.47
19.11	**30.0**	**Overload**	**KSI**	**33.00**	**10.41**	**4.32**	**2.902**	**58.05**	**4.847**	**96.94**
25.48	40.0	Flexure	KIP-FT	4047.06	721.26	473.81	3.023	60.46	5.048	100.96
25.48	40.0	Shear	KIPS	370.61	9.39	19.03	8.673	173.46	14.484	289.68
25.48	**40.0**	**Overload**	**KSI**	**33.00**	**11.89**	**4.94**	**2.360**	**47.19**	**3.941**	**78.81**
31.85	50.0	Flexure	KIP-FT	4047.06	751.17	493.55	2.866	57.31	4.786	95.71

31.85	50.0	Shear	KIPS	370.61	0.00	15.02	11.368	227.37	18.985	379.71
31.85	**50.0**	**Overload**	**KSI**	**33.00**	**12.38**	**5.14**	**2.208**	**44.16**	**3.687**	**73.74**
38.22	60.0	Flexure	KIP-FT	4047.06	721.25	473.81	3.023	60.46	5.048	100.96
38.22	60.0	Shear	KIPS	370.61	9.39	19.03	8.673	173.46	14.484	289.68
38.22	**60.0**	**Overload**	**KSI**	**33.00**	**11.89**	**4.94**	**2.360**	**47.19**	**3.941**	**78.81**
44.59	70.0	Flexure	KIP-FT	4047.06	631.24	414.58	3.585	71.69	5.986	119.73
44.59	70.0	Shear	KIPS	370.61	18.94	23.30	6.840	136.81	11.424	228.47
44.59	**70.0**	**Overload**	**KSI**	**33.00**	**10.41**	**4.32**	**2.902**	**58.05**	**4.847**	**96.94**
50.96	80.0	Flexure	KIP-FT	4047.06	480.65	315.87	4.990	99.81	8.334	166.68
50.96	80.0	Shear	KIPS	370.61	28.34	27.74	5.542	110.83	9.255	185.09
50.96	**80.0**	**Overload**	**KSI**	**33.00**	**7.92**	**3.29**	**4.261**	**85.22**	**7.116**	**142.31**
57.33	90.0	Flexure	KIP-FT	4047.06	270.24	177.68	9.581	191.62	16.000	320.00
57.33	**90.0**	**Shear**	**KIPS**	**370.61**	**37.73**	**32.46**	**4.563**	**91.26**	**7.620**	**152.40**
57.33	90.0	Overload	KSI	33.00	4.46	1.85	8.697	173.93	14.523	290.46
63.70	100.0	Flexure	KIP-FT	4047.06	0.00	0.00	99.000	1980.00	99.000	1980.00
63.70	**100.0**	**Shear**	**KIPS**	**370.61**	**47.12**	**31.60**	**4.509**	**90.18**	**7.530**	**150.61**
63.70	100.0	Overload	KSI	-33.00	-0.00	-0.00	99.000	1980.00	99.000	1980.00

Detailed Rating Results
HS 20-44
Axle Load
Impact: As Requested
Lane: As Requested

Span 1

Location							**Inventory Rating**	**Inventory Load Rating**	**Operating Rating**	**Operating Load Rating**
(ft)	**Percent**	**Limit State**	**Units**	**Capacity**	**DL**	**LL**	**Factor**	**(Ton)**	**Factor**	**(Ton)**
0.00	0.0	Flexure	KIP-FT	4047.06	0.00	0.00	99.000	3564.00	99.000	3564.00
0.00	**0.0**	**Shear**	**KIPS**	**370.61**	**47.12**	**49.16**	**2.899**	**104.35**	**4.841**	**174.26**
0.00	0.0	Overload	KSI	-33.00	-0.00	-0.00	99.000	3564.00	99.000	3564.00
6.37	10.0	Flexure	KIP-FT	4047.06	270.23	279.03	6.101	219.63	10.189	366.79
6.37	**10.0**	**Shear**	**KIPS**	**370.61**	**37.73**	**44.12**	**3.357**	**120.85**	**5.606**	**201.81**
6.37	10.0	Overload	KSI	33.00	4.45	2.91	5.538	199.36	9.248	332.93
12.74	20.0	Flexure	KIP-FT	4047.06	480.64	483.99	3.257	117.25	5.439	195.81
12.74	20.0	Shear	KIPS	370.61	28.34	38.57	3.986	143.51	6.657	239.66
12.74	**20.0**	**Overload**	**KSI**	**33.00**	**7.92**	**5.04**	**2.781**	**100.11**	**4.644**	**167.18**

19.11	30.0	Flexure	KIP-FT	4047.06	631.22	614.89	2.417	87.01	4.036	145.31
19.11	30.0	Shear	KIPS	370.61	18.94	32.94	4.839	174.19	8.080	290.90
19.11	**30.0**	**Overload**	**KSI**	**33.00**	**10.41**	**6.41**	**1.957**	**70.45**	**3.268**	**117.65**
25.48	40.0	Flexure	KIP-FT	4047.06	721.26	689.82	2.076	74.75	3.467	124.83
25.48	40.0	Shear	KIPS	370.61	9.39	27.09	6.093	219.36	10.176	366.32
25.48	**40.0**	**Overload**	**KSI**	**33.00**	**11.89**	**7.19**	**1.621**	**58.35**	**2.707**	**97.44**
31.85	50.0	Flexure	KIP-FT	4047.06	751.17	699.72	2.021	72.77	3.376	121.52
31.85	50.0	Shear	KIPS	370.61	0.00	21.12	8.083	291.00	13.499	485.97
31.85	**50.0**	**Overload**	**KSI**	**33.00**	**12.38**	**7.29**	**1.557**	**56.06**	**2.601**	**93.63**
38.22	60.0	Flexure	KIP-FT	4047.06	721.25	689.82	2.076	74.75	3.467	124.83
38.22	60.0	Shear	KIPS	370.61	9.39	27.09	6.093	219.36	10.176	366.32
38.22	**60.0**	**Overload**	**KSI**	**33.00**	**11.89**	**7.19**	**1.621**	**58.35**	**2.707**	**97.44**
44.59	70.0	Flexure	KIP-FT	4047.06	631.24	614.89	2.417	87.01	4.036	145.31
44.59	70.0	Shear	KIPS	370.61	18.94	32.94	4.839	174.19	8.080	290.90
44.59	**70.0**	**Overload**	**KSI**	**33.00**	**10.41**	**6.41**	**1.957**	**70.45**	**3.268**	**117.65**
50.96	80.0	Flexure	KIP-FT	4047.06	480.65	483.99	3.257	117.25	5.439	195.81
50.96	80.0	Shear	KIPS	370.61	28.34	38.57	3.986	143.51	6.657	239.66
50.96	**80.0**	**Overload**	**KSI**	**33.00**	**7.92**	**5.04**	**2.781**	**100.11**	**4.644**	**167.18**
57.33	90.0	Flexure	KIP-FT	4047.06	270.24	279.03	6.101	219.63	10.189	366.79
57.33	**90.0**	**Shear**	**KIPS**	**370.61**	**37.73**	**44.12**	**3.357**	**120.85**	**5.606**	**201.81**
57.33	90.0	Overload	KSI	33.00	4.46	2.91	5.538	199.36	9.248	332.93
63.70	100.0	Flexure	KIP-FT	4047.06	0.00	0.00	99.000	3564.00	99.000	3564.00
63.70	**100.0**	**Shear**	**KIPS**	**370.61**	**47.12**	**49.16**	**2.899**	**104.35**	**4.840**	**174.26**
63.70	100.0	Overload	KSI	-33.00	-0.00	-0.00	99.000	3564.00	99.000	3564.00

Detailed Rating Results
HS 20-44
Lane
Impact: As Requested
Lane: As Requested

Span 1

Location							Inventory Rating	Inventory Load Rating	Operating Rating	Operating Load Rating
(ft)	**Percent**	**Limit State**	**Units**	**Capacity**	**DL**	**LL**	**Factor**	**(Ton)**	**Factor**	**(Ton)**
0.00	0.0	Flexure	KIP-FT	4047.06	0.00	0.00	99.000	3564.00	99.000	3564.00

0.00	**0.0**	**Shear**	**KIPS**	**370.61**	**47.12**	**31.60**	**4.509**	**162.33**	**7.530**	**271.09**
0.00	0.0	Overload	KSI	-33.00	-0.00	-0.00	99.000	3564.00	99.000	3564.00
6.37	10.0	Flexure	KIP-FT	4047.06	270.23	177.68	9.581	344.91	16.000	576.01
6.37	**10.0**	**Shear**	**KIPS**	**370.61**	**37.73**	**32.46**	**4.563**	**164.26**	**7.620**	**274.32**
6.37	10.0	Overload	KSI	33.00	4.45	1.85	8.697	313.08	14.523	522.84
12.74	20.0	Flexure	KIP-FT	4047.06	480.64	315.87	4.990	179.65	8.334	300.02
12.74	20.0	Shear	KIPS	370.61	28.34	27.74	5.542	199.50	9.255	333.17
12.74	**20.0**	**Overload**	**KSI**	**33.00**	**7.92**	**3.29**	**4.261**	**153.39**	**7.116**	**256.17**
19.11	30.0	Flexure	KIP-FT	4047.06	631.22	414.58	3.585	129.05	5.986	215.51
19.11	30.0	Shear	KIPS	370.61	18.94	23.30	6.841	246.26	11.424	411.25
19.11	**30.0**	**Overload**	**KSI**	**33.00**	**10.41**	**4.32**	**2.902**	**104.49**	**4.847**	**174.49**
25.48	40.0	Flexure	KIP-FT	4047.06	721.26	473.81	3.023	108.82	5.048	181.73
25.48	40.0	Shear	KIPS	370.61	9.39	19.03	8.673	312.23	14.484	521.43
25.48	**40.0**	**Overload**	**KSI**	**33.00**	**11.89**	**4.94**	**2.360**	**84.95**	**3.941**	**141.86**
31.85	50.0	Flexure	KIP-FT	4047.06	751.17	493.55	2.866	103.16	4.786	172.28
31.85	50.0	Shear	KIPS	370.61	0.00	15.02	11.368	409.27	18.985	683.47
31.85	**50.0**	**Overload**	**KSI**	**33.00**	**12.38**	**5.14**	**2.208**	**79.48**	**3.687**	**132.74**
38.22	60.0	Flexure	KIP-FT	4047.06	721.25	473.81	3.023	108.82	5.048	181.73
38.22	60.0	Shear	KIPS	370.61	9.39	19.03	8.673	312.23	14.484	521.43
38.22	**60.0**	**Overload**	**KSI**	**33.00**	**11.89**	**4.94**	**2.360**	**84.95**	**3.941**	**141.86**
44.59	70.0	Flexure	KIP-FT	4047.06	631.24	414.58	3.585	129.05	5.986	215.51
44.59	70.0	Shear	KIPS	370.61	18.94	23.30	6.840	246.26	11.424	411.25
44.59	**70.0**	**Overload**	**KSI**	**33.00**	**10.41**	**4.32**	**2.902**	**104.48**	**4.847**	**174.49**
50.96	80.0	Flexure	KIP-FT	4047.06	480.65	315.87	4.990	179.65	8.334	300.02
50.96	80.0	Shear	KIPS	370.61	28.34	27.74	5.542	199.50	9.255	333.17
50.96	**80.0**	**Overload**	**KSI**	**33.00**	**7.92**	**3.29**	**4.261**	**153.39**	**7.116**	**256.16**
57.33	90.0	Flexure	KIP-FT	4047.06	270.24	177.68	9.581	344.91	16.000	576.00
57.33	**90.0**	**Shear**	**KIPS**	**370.61**	**37.73**	**32.46**	**4.563**	**164.26**	**7.620**	**274.32**
57.33	90.0	Overload	KSI	33.00	4.46	1.85	8.697	313.07	14.523	522.83
63.70	100.0	Flexure	KIP-FT	4047.06	0.00	0.00	99.000	3564.00	99.000	3564.00
63.70	**100.0**	**Shear**	**KIPS**	**370.61**	**47.12**	**31.60**	**4.509**	**162.33**	**7.530**	**271.09**
63.70	100.0	Overload	KSI	-33.00	-0.00	-0.00	99.000	3564.00	99.000	3564.00

Bridge Name: 1031529
NBI Structure ID: 1031529
Bridge ID: 1031529

Analyzed By: BrR
Analyze Date: Tuesday, April 15, 2014 10:54:17
Analysis Engine: AASHTO LFR Engine Version 6.5.0.3001
Analysis Preference Setting: None

Report By: brr
Report Date: Tuesday, April 15, 2014 11:13:08

Structure Definition Name: Span 3 (NB)
Member Name: G1 (S16 plan designation)
Member Alternative Name: 5% Section Loss

Load Factor Rating Summary

Live Load		Rating Factor	Controls	Capacity (Ton)	Location Span	Location (ft)	Location Percent	Impact	Lane
H 20-44	Inventory	2.728	Service - Steel	54.56	1	20.83	50.0	As Requested	As Requested
	Operating	4.556	Service - Steel	91.12	1	20.83	50.0	As Requested	As Requested
HS 20-44	Inventory	2.094	Service - Steel	75.37	1	20.83	50.0	As Requested	As Requested
	Operating	3.496	Service - Steel	125.87	1	20.83	50.0	As Requested	As Requested

Note:
"N/A" indicates not applicable
"**" indicates not available

Individual Vehicle Load Factor Rating Summary

Live Load		Vehicle Type	Rating Factor	Controls	Capacity (Ton)	Location Span	(ft)	Percent	Impact	Lane
H 20-44	Inventory	Lane	3.015	Service - Steel	60.30	1	20.83	50.0	As Requested	As Requested
	Operating	Lane	5.035	Service - Steel	100.70	1	20.83	50.0	As Requested	As Requested
H 20-44	Inventory	Axle Load	2.728	Service - Steel	54.56	1	20.83	50.0	As Requested	As Requested
	Operating	Axle Load	4.556	Service - Steel	91.12	1	20.83	50.0	As Requested	As Requested

Note:
"N/A" indicates not applicable
"**" indicates not available

Reactions
Live Load H 20-44

Support	Stage 1 DL (kip)	Stage 2 DL (kip)	+(LL+I) (kip)	-(LL+I) (kip)	Reaction +IF (%)	Reaction -IF (%)
1	29.84	N/A	23.32(L)	0.00(L)	30.000	0.000
2	29.83	N/A	23.32(L)	0.00(L)	30.000	0.000

Note:
"N/A" indicates not applicable
"**" indicates not available

LL Codes:
(T) Truck load controls
(L) Lane load controls

Note:
Impact and distribution factors included in above live load reactions.

Moments
Live Load H 20-44

Span 1

Location (ft)	Percent	Stage 1 DL (kip-ft)	Stage 2 DL (kip-ft)	+(LL+I) (kip-ft)	-(LL+I) (kip-ft)	+Impact Factor (%)	-Impact Factor (%)
0.00	0.0	-0.00	N/A	-0.00(L)	-0.00(L)	**	**
4.17	10.0	111.41	N/A	115.15(T)	0.00(L)	**	**
8.33	20.0	198.15	N/A	202.65(T)	0.00(L)	**	**
12.50	30.0	260.19	N/A	262.50(T)	0.00(L)	**	**
16.66	40.0	297.56	N/A	294.69(T)	0.00(L)	**	**
20.08	48.2	309.78	N/A	300.45(T)	0.00(L)	**	**
20.83	50.0	310.13	N/A	299.22(T)	0.00(L)	**	**
25.00	60.0	297.47	N/A	294.69(T)	0.00(L)	**	**
29.16	70.0	260.12	N/A	262.50(T)	0.00(L)	**	**
33.33	80.0	198.10	N/A	202.65(T)	0.00(L)	**	**
37.49	90.0	111.39	N/A	115.15(T)	0.00(L)	**	**
41.66	100.0	-0.00	N/A	0.00(L)	0.00(L)	**	**

Note:
"N/A" indicates not applicable
"**" indicates not available

LL Codes:
(T) Truck load controls
(L) Lane load controls

Note:
Impact and distribution factors included in above live load moments.

Shears
Live Load H 20-44

Span 1

Location (ft)	Percent	Stage 1 DL (kip)	Stage 2 DL (kip)	+(LL+I) (kip)	-(LL+I) (kip)	+Impact Factor (%)	-Impact Factor (%)
0.00	0.0	29.71	N/A	26.47(L)	-0.00(L)	**	**
4.17	10.0	23.78	N/A	28.38(L)	-2.66(T)	**	**
8.33	20.0	17.86	N/A	24.34(L)	-5.31(T)	**	**
12.50	30.0	11.93	N/A	21.00(T)	-7.97(T)	**	**
16.66	40.0	6.01	N/A	17.68(T)	-11.05(T)	**	**
20.08	48.2	1.15	N/A	14.97(T)	-13.76(T)	**	**
20.83	50.0	-0.08	N/A	14.36(T)	-14.36(T)	**	**
25.00	60.0	-6.00	N/A	11.05(T)	-17.68(T)	**	**
29.16	70.0	-11.93	N/A	7.97(T)	-21.00(T)	**	**
33.33	80.0	-17.85	N/A	5.31(T)	-24.34(L)	**	**
37.49	90.0	-23.78	N/A	2.66(T)	-28.38(L)	**	**
41.66	100.0	-29.70	N/A	-0.00(L)	-26.47(L)	**	**

Note:
"N/A" indicates not applicable
"**" indicates not available

LL Codes:
(T) Truck load controls
(L) Lane load controls

Note:
Impact and distribution factors included in above live load shears.

Individual Vehicle Load Factor Rating Summary

Live Load		Vehicle Type	Rating Factor	Controls	Capacity (Ton)	Location Span	(ft)	Percent	Impact	Lane
HS 20-44	Inventory	Lane	3.015	Service - Steel	108.53	1	20.83	50.0	As Requested	As Requested
	Operating	Lane	5.035	Service - Steel	181.25	1	20.83	50.0	As Requested	As Requested
HS 20-44	Inventory	Axle Load	2.094	Service - Steel	75.37	1	20.83	50.0	As Requested	As Requested
	Operating	Axle Load	3.496	Service - Steel	125.87	1	20.83	50.0	As Requested	As Requested

Note:
"N/A" indicates not applicable
"**" indicates not available

Reactions
Live Load HS 20-44

Support	Stage 1 DL (kip)	Stage 2 DL (kip)	+(LL+I) (kip)	-(LL+I) (kip)	Reaction +IF (%)	Reaction -IF (%)
1	29.84	N/A	33.12(T)	0.00(L)	30.000	0.000
2	29.83	N/A	33.12(T)	0.00(L)	30.000	0.000

Note:
"N/A" indicates not applicable
"**" indicates not available

LL Codes:
(T) Truck load controls
(L) Lane load controls

Note:
Impact and distribution factors included in above live load reactions.

Moments
Live Load HS 20-44

Span 1

Location (ft)	Percent	Stage 1 DL (kip-ft)	Stage 2 DL (kip-ft)	+(LL+I) (kip-ft)	-(LL+I) (kip-ft)	+Impact Factor (%)	-Impact Factor (%)
0.00	0.0	-0.00	N/A	-0.00(L)	-0.00(L)	**	**
4.17	10.0	111.41	N/A	168.25(T)	0.00(L)	**	**
8.33	20.0	198.15	N/A	286.71(T)	0.00(L)	**	**
12.50	30.0	260.19	N/A	355.40(T)	0.00(L)	**	**
16.66	40.0	297.56	N/A	392.89(T)	0.00(L)	**	**
20.08	48.2	309.78	N/A	394.13(T)	0.00(L)	**	**
20.83	50.0	310.13	N/A	389.90(T)	0.00(L)	**	**
25.00	60.0	297.47	N/A	392.89(T)	0.00(L)	**	**
29.16	70.0	260.12	N/A	355.40(T)	0.00(L)	**	**
33.33	80.0	198.10	N/A	286.71(T)	0.00(L)	**	**
37.49	90.0	111.39	N/A	168.25(T)	0.00(L)	**	**
41.66	100.0	-0.00	N/A	0.00(L)	0.00(L)	**	**

Note:
"N/A" indicates not applicable
"**" indicates not available

LL Codes:
(T) Truck load controls
(L) Lane load controls

Note:
Impact and distribution factors included in above live load moments.

Shears
Live Load HS 20-44

Span 1

Location (ft)	Percent	Stage 1 DL (kip)	Stage 2 DL (kip)	+(LL+I) (kip)	-(LL+I) (kip)	+Impact Factor (%)	-Impact Factor (%)
0.00	0.0	29.71	N/A	45.64(T)	-0.00(L)	**	**
4.17	10.0	23.78	N/A	40.39(T)	-2.66(T)	**	**
8.33	20.0	17.86	N/A	34.41(T)	-5.31(T)	**	**
12.50	30.0	11.93	N/A	28.44(T)	-7.97(T)	**	**
16.66	40.0	6.01	N/A	22.94(T)	-12.32(T)	**	**
20.08	48.2	1.15	N/A	18.59(T)	-16.67(T)	**	**
20.83	50.0	-0.08	N/A	17.63(T)	-17.63(T)	**	**
25.00	60.0	-6.00	N/A	12.32(T)	-22.94(T)	**	**
29.16	70.0	-11.93	N/A	7.97(T)	-28.44(T)	**	**
33.33	80.0	-17.85	N/A	5.31(T)	-34.41(T)	**	**
37.49	90.0	-23.78	N/A	2.66(T)	-40.39(T)	**	**
41.66	100.0	-29.70	N/A	-0.00(L)	-45.64(T)	**	**

Note:
"N/A" indicates not applicable
"**" indicates not available

LL Codes:
(T) Truck load controls
(L) Lane load controls

Note:
Impact and distribution factors included in above live load shears.

Cross Section Properties topic is not available for the specified analysis engine!

Report by Action: ☑ **Flexure** ☑ **Shear** ☑ **Overload** ☑ **Critical**

Detailed Rating Results
H 20-44
Axle Load
Impact: As Requested
Lane: As Requested

Span 1

Location (ft)	Percent	Limit State	Units	Capacity	DL	LL	Inventory Rating Factor	Inventory Load Rating (Ton)	Operating Rating Factor	Operating Load Rating (Ton)
0.00	0.0	Flexure	KIP-FT	2853.05	0.00	0.00	99.000	1980.00	99.000	1980.00
0.00	**0.0**	**Shear**	**KIPS**	**390.11**	**29.71**	**26.36**	**6.142**	**122.83**	**10.256**	**205.13**
0.00	0.0	Overload	KSI	-33.00	-0.00	-0.00	99.000	1980.00	99.000	1980.00
4.17	10.0	Flexure	KIP-FT	2853.05	111.41	115.15	10.833	216.66	18.091	361.82
4.17	**10.0**	**Shear**	**KIPS**	**390.11**	**23.78**	**27.64**	**5.986**	**119.71**	**9.996**	**199.92**
4.17	10.0	Overload	KSI	33.00	3.05	1.93	8.773	175.47	14.652	293.03
8.33	20.0	Flexure	KIP-FT	2853.05	198.15	202.65	5.899	117.99	9.852	197.04
8.33	20.0	Shear	KIPS	390.11	17.86	24.32	6.948	138.97	11.604	232.07
8.33	**20.0**	**Overload**	**KSI**	**33.00**	**5.42**	**3.40**	**4.568**	**91.35**	**7.628**	**152.56**
12.50	30.0	Flexure	KIP-FT	2853.05	260.19	262.50	4.413	88.26	7.369	147.39
12.50	30.0	Shear	KIPS	390.11	11.93	21.00	8.215	164.31	13.720	274.39
12.50	**30.0**	**Overload**	**KSI**	**33.00**	**7.12**	**4.40**	**3.296**	**65.91**	**5.504**	**110.07**
16.66	40.0	Flexure	KIP-FT	2853.05	297.56	294.69	3.855	77.10	6.438	128.75
16.66	40.0	Shear	KIPS	390.11	6.01	17.68	9.958	199.16	16.630	332.59
16.66	**40.0**	**Overload**	**KSI**	**33.00**	**8.14**	**4.94**	**2.812**	**56.24**	**4.696**	**93.91**
20.83	50.0	Flexure	KIP-FT	2853.05	310.13	299.22	3.771	75.43	6.298	125.96
20.83	50.0	Shear	KIPS	390.11	0.08	14.36	12.506	250.12	20.885	417.70
20.83	**50.0**	**Overload**	**KSI**	**33.00**	**8.48**	**5.02**	**2.728**	**54.56**	**4.556**	**91.12**
25.00	60.0	Flexure	KIP-FT	2853.05	297.47	294.69	3.855	77.10	6.438	128.76
25.00	60.0	Shear	KIPS	390.11	6.00	17.68	9.958	199.16	16.630	332.60
25.00	**60.0**	**Overload**	**KSI**	**33.00**	**8.13**	**4.94**	**2.812**	**56.24**	**4.696**	**93.92**
29.16	70.0	Flexure	KIP-FT	2853.05	260.12	262.50	4.413	88.26	7.370	147.39
29.16	70.0	Shear	KIPS	390.11	11.93	21.00	8.215	164.31	13.720	274.40
29.16	**70.0**	**Overload**	**KSI**	**33.00**	**7.11**	**4.40**	**3.296**	**65.92**	**5.504**	**110.08**

33.33	80.0	Flexure	KIP-FT	2853.05	198.10	202.65	5.899	117.99	9.852	197.04
33.33	80.0	Shear	KIPS	390.11	17.85	24.32	6.948	138.97	11.604	232.08
33.33	**80.0**	**Overload**	**KSI**	**33.00**	**5.42**	**3.40**	**4.568**	**91.36**	**7.628**	**152.57**
37.49	90.0	Flexure	KIP-FT	2853.05	111.39	115.15	10.833	216.66	18.091	361.82
37.49	**90.0**	**Shear**	**KIPS**	**390.11**	**23.78**	**27.64**	**5.986**	**119.72**	**9.996**	**199.92**
37.49	90.0	Overload	KSI	33.00	3.05	1.93	8.774	175.47	14.652	293.04
41.66	100.0	Flexure	KIP-FT	2853.05	0.00	0.00	99.000	1980.00	99.000	1980.00
41.66	**100.0**	**Shear**	**KIPS**	**390.11**	**29.70**	**26.36**	**6.142**	**122.83**	**10.257**	**205.13**
41.66	100.0	Overload	KSI	-33.00	-0.00	-0.00	99.000	1980.00	99.000	1980.00

Detailed Rating Results
H 20-44
Lane
Impact: As Requested
Lane: As Requested

Span 1

Location							Inventory Rating	Inventory Load Rating	Operating Rating	Operating Load Rating
(ft)	**Percent**	**Limit State**	**Units**	**Capacity**	**DL**	**LL**	**Factor**	**(Ton)**	**Factor**	**(Ton)**
0.00	0.0	Flexure	KIP-FT	2853.05	0.00	0.00	99.000	1980.00	99.000	1980.00
0.00	**0.0**	**Shear**	**KIPS**	**390.11**	**29.71**	**26.47**	**6.115**	**122.31**	**10.213**	**204.26**
0.00	0.0	Overload	KSI	-33.00	-0.00	-0.00	99.000	1980.00	99.000	1980.00
4.17	10.0	Flexure	KIP-FT	2853.05	111.41	97.48	12.797	255.95	21.371	427.43
4.17	**10.0**	**Shear**	**KIPS**	**390.11**	**23.78**	**28.38**	**5.830**	**116.61**	**9.737**	**194.74**
4.17	10.0	Overload	KSI	33.00	3.05	1.64	10.364	207.29	17.309	346.17
8.33	20.0	Flexure	KIP-FT	2853.05	198.15	173.29	6.899	137.98	11.521	230.42
8.33	20.0	Shear	KIPS	390.11	17.86	24.34	6.943	138.87	11.596	231.91
8.33	**20.0**	**Overload**	**KSI**	**33.00**	**5.42**	**2.91**	**5.341**	**106.83**	**8.920**	**178.40**
12.50	30.0	Flexure	KIP-FT	2853.05	260.19	227.45	5.093	101.86	8.505	170.10
12.50	30.0	Shear	KIPS	390.11	11.93	20.52	8.408	168.15	14.041	280.82
12.50	**30.0**	**Overload**	**KSI**	**33.00**	**7.12**	**3.82**	**3.803**	**76.07**	**6.352**	**127.03**
16.66	40.0	Flexure	KIP-FT	2853.05	297.56	259.94	4.370	87.40	7.298	145.96
16.66	40.0	Shear	KIPS	390.11	6.01	16.93	10.403	208.06	17.373	347.47
16.66	**40.0**	**Overload**	**KSI**	**33.00**	**8.14**	**4.36**	**3.188**	**63.75**	**5.323**	**106.47**
20.83	50.0	Flexure	KIP-FT	2853.05	310.13	270.77	4.168	83.35	6.960	139.20

20.83	50.0	Shear	KIPS	390.11	0.08	13.55	13.255	265.11	22.136	442.73
20.83	**50.0**	**Overload**	**KSI**	**33.00**	**8.48**	**4.54**	**3.015**	**60.30**	**5.035**	**100.70**
25.00	60.0	Flexure	KIP-FT	2853.05	297.47	259.94	4.370	87.41	7.299	145.97
25.00	60.0	Shear	KIPS	390.11	6.00	16.93	10.403	208.07	17.374	347.47
25.00	**60.0**	**Overload**	**KSI**	**33.00**	**8.13**	**4.36**	**3.188**	**63.76**	**5.324**	**106.48**
29.16	70.0	Flexure	KIP-FT	2853.05	260.12	227.45	5.093	101.86	8.505	170.11
29.16	70.0	Shear	KIPS	390.11	11.93	20.52	8.408	168.16	14.041	280.82
29.16	**70.0**	**Overload**	**KSI**	**33.00**	**7.11**	**3.82**	**3.804**	**76.07**	**6.352**	**127.04**
33.33	80.0	Flexure	KIP-FT	2853.05	198.10	173.29	6.899	137.98	11.521	230.42
33.33	80.0	Shear	KIPS	390.11	17.85	24.34	6.944	138.87	11.596	231.92
33.33	**80.0**	**Overload**	**KSI**	**33.00**	**5.42**	**2.91**	**5.342**	**106.83**	**8.921**	**178.41**
37.49	90.0	Flexure	KIP-FT	2853.05	111.39	97.48	12.797	255.95	21.372	427.43
37.49	**90.0**	**Shear**	**KIPS**	**390.11**	**23.78**	**28.38**	**5.831**	**116.61**	**9.737**	**194.74**
37.49	90.0	Overload	KSI	33.00	3.05	1.64	10.365	207.29	17.309	346.18
41.66	100.0	Flexure	KIP-FT	2853.05	0.00	0.00	99.000	1980.00	99.000	1980.00
41.66	**100.0**	**Shear**	**KIPS**	**390.11**	**29.70**	**26.47**	**6.116**	**122.31**	**10.213**	**204.26**
41.66	100.0	Overload	KSI	-33.00	-0.00	-0.00	99.000	1980.00	99.000	1980.00

Detailed Rating Results
HS 20-44
Axle Load
Impact: As Requested
Lane: As Requested

Span 1

Location							**Inventory Rating**	**Inventory Load Rating**	**Operating Rating**	**Operating Load Rating**
(ft)	**Percent**	**Limit State**	**Units**	**Capacity**	**DL**	**LL**	**Factor**	**(Ton)**	**Factor**	**(Ton)**
0.00	0.0	Flexure	KIP-FT	2853.05	0.00	0.00	99.000	3564.00	99.000	3564.00
0.00	**0.0**	**Shear**	**KIPS**	**390.11**	**29.71**	**45.64**	**3.547**	**127.70**	**5.924**	**213.26**
0.00	0.0	Overload	KSI	-33.00	-0.00	-0.00	99.000	3564.00	99.000	3564.00
4.17	10.0	Flexure	KIP-FT	2853.05	111.41	168.25	7.414	266.92	12.382	445.76
4.17	**10.0**	**Shear**	**KIPS**	**390.11**	**23.78**	**40.39**	**4.097**	**147.49**	**6.842**	**246.30**
4.17	10.0	Overload	KSI	33.00	3.05	2.82	6.005	216.18	10.028	361.02
8.33	20.0	Flexure	KIP-FT	2853.05	198.15	286.71	4.170	150.11	6.963	250.69
8.33	20.0	Shear	KIPS	390.11	17.86	34.41	4.911	176.80	8.202	295.26
8.33	**20.0**	**Overload**	**KSI**	**33.00**	**5.42**	**4.81**	**3.228**	**116.23**	**5.392**	**194.10**

12.50	30.0	Flexure	KIP-FT	2853.05	260.19	355.40	3.259	117.34	5.443	195.95
12.50	30.0	Shear	KIPS	390.11	11.93	28.44	6.068	218.44	10.133	364.80
12.50	**30.0**	**Overload**	**KSI**	**33.00**	**7.12**	**5.96**	**2.434**	**87.63**	**4.065**	**146.34**
16.66	40.0	Flexure	KIP-FT	2853.05	297.56	392.89	2.891	104.09	4.829	173.83
16.66	40.0	Shear	KIPS	390.11	6.01	22.94	7.676	276.34	12.819	461.49
16.66	**40.0**	**Overload**	**KSI**	**33.00**	**8.14**	**6.59**	**2.109**	**75.92**	**3.522**	**126.79**
20.83	50.0	Flexure	KIP-FT	2853.05	310.13	389.90	2.894	104.19	4.833	174.00
20.83	50.0	Shear	KIPS	390.11	0.08	17.63	10.190	366.83	17.017	612.61
20.83	**50.0**	**Overload**	**KSI**	**33.00**	**8.48**	**6.54**	**2.094**	**75.37**	**3.496**	**125.87**
25.00	60.0	Flexure	KIP-FT	2853.05	297.47	392.89	2.891	104.09	4.829	173.84
25.00	60.0	Shear	KIPS	390.11	6.00	22.94	7.676	276.35	12.819	461.50
25.00	**60.0**	**Overload**	**KSI**	**33.00**	**8.13**	**6.59**	**2.109**	**75.93**	**3.522**	**126.81**
29.16	70.0	Flexure	KIP-FT	2853.05	260.12	355.40	3.259	117.34	5.443	195.96
29.16	70.0	Shear	KIPS	390.11	11.93	28.44	6.068	218.45	10.133	364.81
29.16	**70.0**	**Overload**	**KSI**	**33.00**	**7.11**	**5.96**	**2.434**	**87.63**	**4.065**	**146.35**
33.33	80.0	Flexure	KIP-FT	2853.05	198.10	286.71	4.170	150.11	6.964	250.69
33.33	80.0	Shear	KIPS	390.11	17.85	34.41	4.911	176.81	8.202	295.27
33.33	**80.0**	**Overload**	**KSI**	**33.00**	**5.42**	**4.81**	**3.229**	**116.23**	**5.392**	**194.11**
37.49	90.0	Flexure	KIP-FT	2853.05	111.39	168.25	7.415	266.92	12.382	445.76
37.49	**90.0**	**Shear**	**KIPS**	**390.11**	**23.78**	**40.39**	**4.097**	**147.49**	**6.842**	**246.31**
37.49	90.0	Overload	KSI	33.00	3.05	2.82	6.005	216.18	10.029	361.03
41.66	100.0	Flexure	KIP-FT	2853.05	0.00	0.00	99.000	3564.00	99.000	3564.00
41.66	**100.0**	**Shear**	**KIPS**	**390.11**	**29.70**	**45.64**	**3.547**	**127.70**	**5.924**	**213.26**
41.66	100.0	Overload	KSI	-33.00	-0.00	-0.00	99.000	3564.00	99.000	3564.00

Detailed Rating Results
HS 20-44
Lane
Impact: As Requested
Lane: As Requested

Span 1

Location							Inventory Rating	Inventory Load Rating	Operating Rating	Operating Load Rating
(ft)	**Percent**	**Limit State**	**Units**	**Capacity**	**DL**	**LL**	**Factor**	**(Ton)**	**Factor**	**(Ton)**
0.00	0.0	Flexure	KIP-FT	2853.05	0.00	0.00	99.000	3564.00	99.000	3564.00

0.00	**0.0**	**Shear**	**KIPS**	**390.11**	**29.71**	**26.47**	**6.115**	**220.16**	**10.213**	**367.66**
0.00	0.0	Overload	KSI	-33.00	-0.00	-0.00	99.000	3564.00	99.000	3564.00
4.17	10.0	Flexure	KIP-FT	2853.05	111.41	97.48	12.797	460.70	21.371	769.37
4.17	**10.0**	**Shear**	**KIPS**	**390.11**	**23.78**	**28.38**	**5.830**	**209.90**	**9.737**	**350.53**
4.17	10.0	Overload	KSI	33.00	3.05	1.64	10.364	373.12	17.309	623.11
8.33	20.0	Flexure	KIP-FT	2853.05	198.15	173.29	6.899	248.36	11.521	414.75
8.33	20.0	Shear	KIPS	390.11	17.86	24.34	6.943	249.97	11.596	417.44
8.33	**20.0**	**Overload**	**KSI**	**33.00**	**5.42**	**2.91**	**5.341**	**192.29**	**8.920**	**321.13**
12.50	30.0	Flexure	KIP-FT	2853.05	260.19	227.45	5.093	183.34	8.505	306.18
12.50	30.0	Shear	KIPS	390.11	11.93	20.52	8.408	302.68	14.041	505.47
12.50	**30.0**	**Overload**	**KSI**	**33.00**	**7.12**	**3.82**	**3.803**	**136.92**	**6.352**	**228.66**
16.66	40.0	Flexure	KIP-FT	2853.05	297.56	259.94	4.370	157.33	7.298	262.73
16.66	40.0	Shear	KIPS	390.11	6.01	16.93	10.403	374.51	17.373	625.44
16.66	**40.0**	**Overload**	**KSI**	**33.00**	**8.14**	**4.36**	**3.188**	**114.75**	**5.323**	**191.64**
20.83	50.0	Flexure	KIP-FT	2853.05	310.13	270.77	4.168	150.03	6.960	250.55
20.83	50.0	Shear	KIPS	390.11	0.08	13.55	13.255	477.19	22.136	796.91
20.83	**50.0**	**Overload**	**KSI**	**33.00**	**8.48**	**4.54**	**3.015**	**108.53**	**5.035**	**181.25**
25.00	60.0	Flexure	KIP-FT	2853.05	297.47	259.94	4.370	157.33	7.299	262.75
25.00	60.0	Shear	KIPS	390.11	6.00	16.93	10.403	374.52	17.374	625.45
25.00	**60.0**	**Overload**	**KSI**	**33.00**	**8.13**	**4.36**	**3.188**	**114.77**	**5.324**	**191.66**
29.16	70.0	Flexure	KIP-FT	2853.05	260.12	227.45	5.093	183.35	8.505	306.19
29.16	70.0	Shear	KIPS	390.11	11.93	20.52	8.408	302.68	14.041	505.48
29.16	**70.0**	**Overload**	**KSI**	**33.00**	**7.11**	**3.82**	**3.804**	**136.93**	**6.352**	**228.68**
33.33	80.0	Flexure	KIP-FT	2853.05	198.10	173.29	6.899	248.36	11.521	414.76
33.33	80.0	Shear	KIPS	390.11	17.85	24.34	6.944	249.97	11.596	417.45
33.33	**80.0**	**Overload**	**KSI**	**33.00**	**5.42**	**2.91**	**5.342**	**192.30**	**8.921**	**321.14**
37.49	90.0	Flexure	KIP-FT	2853.05	111.39	97.48	12.797	460.71	21.372	769.38
37.49	**90.0**	**Shear**	**KIPS**	**390.11**	**23.78**	**28.38**	**5.831**	**209.90**	**9.737**	**350.53**
37.49	90.0	Overload	KSI	33.00	3.05	1.64	10.365	373.13	17.309	623.13
41.66	100.0	Flexure	KIP-FT	2853.05	0.00	0.00	99.000	3564.00	99.000	3564.00
41.66	**100.0**	**Shear**	**KIPS**	**390.11**	**29.70**	**26.47**	**6.116**	**220.16**	**10.213**	**367.67**
41.66	100.0	Overload	KSI	-33.00	-0.00	-0.00	99.000	3564.00	99.000	3564.00

Bridge Name: 1031529
NBI Structure ID: 1031529
Bridge ID: 1031529

Analyzed By: BrR
Analyze Date: Tuesday, April 15, 2014 10:54:17
Analysis Engine: AASHTO LFR Engine Version 6.5.0.3001
Analysis Preference Setting: None

Report By: brr
Report Date: Tuesday, April 15, 2014 11:13:08

Structure Definition Name: Span 3 (NB)
Member Name: G2 (S17 plan designation)
Member Alternative Name: 5% Section Loss

Load Factor Rating Summary

Live Load		Rating Factor	Controls	Capacity (Ton)	Location Span	(ft)	Percent	Impact	Lane
H 20-44	Inventory	3.355	Service - Steel	67.10	1	20.83	50.0	As Requested	As Requested
	Operating	5.603	Service - Steel	112.06	1	20.83	50.0	As Requested	As Requested
HS 20-44	Inventory	2.575	Service - Steel	92.70	1	20.83	50.0	As Requested	As Requested
	Operating	4.300	Service - Steel	154.80	1	20.83	50.0	As Requested	As Requested

Note:
"N/A" indicates not applicable
"**" indicates not available

Individual Vehicle Load Factor Rating Summary

Live Load		Vehicle Type	Rating Factor	Controls	Capacity (Ton)	Location Span	(ft)	Percent	Impact	Lane
H 20-44	Inventory	Lane	3.708	Service - Steel	74.15	1	20.83	50.0	As Requested	As Requested
	Operating	Lane	6.192	Service - Steel	123.84	1	20.83	50.0	As Requested	As Requested
H 20-44	Inventory	Axle Load	3.355	Service - Steel	67.10	1	20.83	50.0	As Requested	As Requested
	Operating	Axle Load	5.603	Service - Steel	112.06	1	20.83	50.0	As Requested	As Requested

Note:
"N/A" indicates not applicable
"**" indicates not available

Reactions
Live Load H 20-44

Support	Stage 1 DL (kip)	Stage 2 DL (kip)	+(LL+I) (kip)	-(LL+I) (kip)	Reaction +IF (%)	Reaction -IF (%)
1	20.85	N/A	41.18(L)	0.00(L)	30.000	0.000
2	20.83	N/A	41.18(L)	0.00(L)	30.000	0.000

Note:
"N/A" indicates not applicable
"**" indicates not available

LL Codes:
(T) Truck load controls
(L) Lane load controls

Note:
Impact and distribution factors included in above live load reactions.

Moments
Live Load H 20-44

Span 1

Location (ft)	Percent	Stage 1 DL (kip-ft)	Stage 2 DL (kip-ft)	+(LL+I) (kip-ft)	-(LL+I) (kip-ft)	+Impact Factor (%)	-Impact Factor (%)
0.00	0.0	0.00	N/A	-0.00(L)	-0.00(L)	**	**
4.17	10.0	77.22	N/A	123.01(T)	0.00(L)	**	**
8.33	20.0	137.42	N/A	216.47(T)	0.00(L)	**	**
12.50	30.0	180.62	N/A	280.40(T)	0.00(L)	**	**
16.66	40.0	206.81	N/A	314.78(T)	0.00(L)	**	**
20.08	48.2	215.59	N/A	320.93(T)	0.00(L)	**	**
20.83	50.0	215.87	N/A	319.62(T)	0.00(L)	**	**
21.14	50.7	215.82	N/A	320.28(T)	0.00(L)	**	**
25.00	60.0	206.75	N/A	314.78(T)	0.00(L)	**	**
29.16	70.0	180.58	N/A	280.40(T)	0.00(L)	**	**
33.33	80.0	137.40	N/A	216.47(T)	0.00(L)	**	**
37.49	90.0	77.20	N/A	123.01(T)	0.00(L)	**	**
41.66	100.0	0.00	N/A	0.00(L)	0.00(L)	**	**

Note:
"N/A" indicates not applicable
"**" indicates not available

LL Codes:
(T) Truck load controls
(L) Lane load controls

Note:
Impact and distribution factors included in above live load moments.

Shears
Live Load H 20-44

Span 1

Location (ft)	Percent	Stage 1 DL (kip)	Stage 2 DL (kip)	+(LL+I) (kip)	-(LL+I) (kip)	+Impact Factor (%)	-Impact Factor (%)
0.00	0.0	20.58	N/A	39.04(L)	-0.00(L)	**	**
4.17	10.0	16.49	N/A	30.31(L)	-2.84(T)	**	**
8.33	20.0	12.41	N/A	26.00(L)	-5.67(T)	**	**
12.50	30.0	8.33	N/A	22.44(T)	-8.51(T)	**	**
16.66	40.0	4.24	N/A	18.89(T)	-11.80(T)	**	**
20.08	48.2	0.90	N/A	15.99(T)	-14.70(T)	**	**
20.83	50.0	0.00	N/A	15.34(T)	-15.34(T)	**	**
21.14	50.7	-0.30	N/A	15.08(T)	-15.61(T)	**	**
25.00	60.0	-4.24	N/A	11.80(T)	-18.89(T)	**	**
29.16	70.0	-8.32	N/A	8.51(T)	-22.44(T)	**	**
33.33	80.0	-12.41	N/A	5.67(T)	-26.00(L)	**	**
37.49	90.0	-16.49	N/A	2.84(T)	-30.31(L)	**	**
41.66	100.0	-20.57	N/A	-0.00(L)	-39.04(L)	**	**

Note:
"N/A" indicates not applicable
"**" indicates not available

LL Codes:
(T) Truck load controls
(L) Lane load controls

Note:
Impact and distribution factors included in above live load shears.

Individual Vehicle Load Factor Rating Summary

Live Load		Vehicle Type	Rating Factor	Controls	Capacity (Ton)	Location Span	(ft)	Percent	Impact	Lane
HS 20-44	Inventory	Lane	3.708	Service - Steel	133.48	1	20.83	50.0	As Requested	As Requested
	Operating	Lane	6.192	Service - Steel	222.91	1	20.83	50.0	As Requested	As Requested
HS 20-44	Inventory	Axle Load	2.575	Service - Steel	92.70	1	20.83	50.0	As Requested	As Requested
	Operating	Axle Load	4.300	Service - Steel	154.80	1	20.83	50.0	As Requested	As Requested

Note:
"N/A" indicates not applicable
"**" indicates not available

Reactions
Live Load HS 20-44

Support	Stage 1 DL (kip)	Stage 2 DL (kip)	+(LL+I) (kip)	-(LL+I) (kip)	Reaction +IF (%)	Reaction -IF (%)
1	20.85	N/A	58.49(T)	0.00(L)	30.000	0.000
2	20.83	N/A	58.49(T)	0.00(L)	30.000	0.000

Note:
"N/A" indicates not applicable
"**" indicates not available

LL Codes:
(T) Truck load controls
(L) Lane load controls

Note:
Impact and distribution factors included in above live load reactions.

Moments
Live Load HS 20-44

Span 1

Location (ft)	Percent	Stage 1 DL (kip-ft)	Stage 2 DL (kip-ft)	+(LL+I) (kip-ft)	-(LL+I) (kip-ft)	+Impact Factor (%)	-Impact Factor (%)
0.00	0.0	0.00	N/A	-0.00(L)	-0.00(L)	**	**
4.17	10.0	77.22	N/A	179.72(T)	0.00(L)	**	**
8.33	20.0	137.42	N/A	306.26(T)	0.00(L)	**	**
12.50	30.0	180.62	N/A	379.63(T)	0.00(L)	**	**
16.66	40.0	206.81	N/A	419.68(T)	0.00(L)	**	**
20.08	48.2	215.59	N/A	421.00(T)	0.00(L)	**	**
20.83	50.0	215.87	N/A	416.48(T)	0.00(L)	**	**
21.14	50.7	215.82	N/A	418.55(T)	0.00(L)	**	**
25.00	60.0	206.75	N/A	419.68(T)	0.00(L)	**	**
29.16	70.0	180.58	N/A	379.63(T)	0.00(L)	**	**
33.33	80.0	137.40	N/A	306.26(T)	0.00(L)	**	**
37.49	90.0	77.20	N/A	179.72(T)	0.00(L)	**	**
41.66	100.0	0.00	N/A	0.00(L)	0.00(L)	**	**

Note:
"N/A" indicates not applicable
"**" indicates not available

LL Codes:
(T) Truck load controls
(L) Lane load controls

Note:
Impact and distribution factors included in above live load moments.

Shears
Live Load HS 20-44

Span 1

Location (ft)	Percent	Stage 1 DL (kip)	Stage 2 DL (kip)	+(LL+I) (kip)	-(LL+I) (kip)	+Impact Factor (%)	-Impact Factor (%)
0.00	0.0	20.58	N/A	54.66(T)	-0.00(L)	**	**
4.17	10.0	16.49	N/A	43.14(T)	-2.84(T)	**	**
8.33	20.0	12.41	N/A	36.76(T)	-5.67(T)	**	**
12.50	30.0	8.33	N/A	30.38(T)	-8.51(T)	**	**
16.66	40.0	4.24	N/A	24.50(T)	-13.16(T)	**	**
20.08	48.2	0.90	N/A	19.86(T)	-17.81(T)	**	**
20.83	50.0	0.00	N/A	18.83(T)	-18.83(T)	**	**
21.14	50.7	-0.30	N/A	18.41(T)	-19.25(T)	**	**
25.00	60.0	-4.24	N/A	13.16(T)	-24.50(T)	**	**
29.16	70.0	-8.32	N/A	8.51(T)	-30.38(T)	**	**
33.33	80.0	-12.41	N/A	5.67(T)	-36.76(T)	**	**
37.49	90.0	-16.49	N/A	2.84(T)	-43.14(T)	**	**
41.66	100.0	-20.57	N/A	-0.00(L)	-54.66(T)	**	**

Note:
"N/A" indicates not applicable
"**" indicates not available

LL Codes:
(T) Truck load controls
(L) Lane load controls

Note:
Impact and distribution factors included in above live load shears.

Cross Section Properties topic is not available for the specified analysis engine!

Report by Action: ☑ **Flexure** ☑ **Shear** ☑ **Overload** ☑ **Critical**

Detailed Rating Results
H 20-44
Axle Load
Impact: As Requested
Lane: As Requested

Span 1

Location (ft)	Percent	Limit State	Units	Capacity	DL	LL	Inventory Rating Factor	Inventory Load Rating (Ton)	Operating Rating Factor	Operating Load Rating (Ton)
0.00	0.0	Flexure	KIP-FT	3223.07	0.00	0.00	99.000	1980.00	99.000	1980.00
0.00	**0.0**	**Shear**	**KIPS**	**406.37**	**20.58**	**38.21**	**4.576**	**91.53**	**7.642**	**152.85**
0.00	0.0	Overload	KSI	-33.00	-0.00	-0.00	99.000	1980.00	99.000	1980.00
4.17	10.0	Flexure	KIP-FT	3223.07	77.22	123.01	11.693	233.87	19.528	390.56
4.17	**10.0**	**Shear**	**KIPS**	**406.37**	**16.49**	**29.53**	**6.005**	**120.10**	**10.028**	**200.57**
4.17	10.0	Overload	KSI	33.00	1.84	1.80	9.815	196.31	16.392	327.83
8.33	20.0	Flexure	KIP-FT	3223.07	137.42	216.47	6.478	129.56	10.818	216.37
8.33	20.0	Shear	KIPS	406.37	12.41	25.98	6.919	138.37	11.554	231.08
8.33	**20.0**	**Overload**	**KSI**	**33.00**	**3.27**	**3.17**	**5.307**	**106.13**	**8.862**	**177.24**
12.50	30.0	Flexure	KIP-FT	3223.07	180.62	280.40	4.909	98.18	8.198	163.96
12.50	30.0	Shear	KIPS	406.37	8.33	22.44	8.121	162.42	13.562	271.24
12.50	**30.0**	**Overload**	**KSI**	**33.00**	**4.30**	**4.10**	**3.947**	**78.94**	**6.591**	**131.83**
16.66	40.0	Flexure	KIP-FT	3223.07	206.81	314.78	4.323	86.46	7.219	144.39
16.66	40.0	Shear	KIPS	406.37	4.24	18.89	9.774	195.49	16.323	326.47
16.66	**40.0**	**Overload**	**KSI**	**33.00**	**4.92**	**4.61**	**3.435**	**68.70**	**5.736**	**114.72**
20.83	50.0	Flexure	KIP-FT	3223.07	215.87	319.62	4.240	84.81	7.082	141.63
20.83	50.0	Shear	KIPS	406.37	0.00	15.34	12.199	243.97	20.372	407.43
20.83	**50.0**	**Overload**	**KSI**	**33.00**	**5.14**	**4.68**	**3.355**	**67.10**	**5.603**	**112.06**
25.00	60.0	Flexure	KIP-FT	3223.07	206.75	314.78	4.323	86.46	7.219	144.39
25.00	60.0	Shear	KIPS	406.37	4.24	18.89	9.775	195.49	16.324	326.47
25.00	**60.0**	**Overload**	**KSI**	**33.00**	**4.92**	**4.61**	**3.435**	**68.70**	**5.736**	**114.73**
29.16	70.0	Flexure	KIP-FT	3223.07	180.58	280.40	4.909	98.18	8.198	163.96
29.16	70.0	Shear	KIPS	406.37	8.32	22.44	8.121	162.42	13.562	271.24
29.16	**70.0**	**Overload**	**KSI**	**33.00**	**4.30**	**4.10**	**3.947**	**78.94**	**6.592**	**131.83**

33.33	80.0	Flexure	KIP-FT	3223.07	137.40	216.47	6.478	129.56	10.818	216.37
33.33	80.0	Shear	KIPS	406.37	12.41	25.98	6.919	138.37	11.554	231.08
33.33	**80.0**	**Overload**	**KSI**	**33.00**	**3.27**	**3.17**	**5.307**	**106.14**	**8.862**	**177.25**
37.49	90.0	Flexure	KIP-FT	3223.07	77.20	123.01	11.694	233.87	19.528	390.56
37.49	**90.0**	**Shear**	**KIPS**	**406.37**	**16.49**	**29.53**	**6.005**	**120.10**	**10.028**	**200.57**
37.49	90.0	Overload	KSI	33.00	1.84	1.80	9.816	196.31	16.392	327.84
41.66	100.0	Flexure	KIP-FT	3223.07	0.00	0.00	99.000	1980.00	99.000	1980.00
41.66	**100.0**	**Shear**	**KIPS**	**406.37**	**20.57**	**38.21**	**4.576**	**91.53**	**7.642**	**152.85**
41.66	100.0	Overload	KSI	-33.00	-0.00	-0.00	99.000	1980.00	99.000	1980.00

Detailed Rating Results
H 20-44
Lane
Impact: As Requested
Lane: As Requested

Span 1

Location							Inventory Rating	Inventory Load Rating	Operating Rating	Operating Load Rating
(ft)	**Percent**	**Limit State**	**Units**	**Capacity**	**DL**	**LL**	**Factor**	**(Ton)**	**Factor**	**(Ton)**
0.00	0.0	Flexure	KIP-FT	3223.07	0.00	0.00	99.000	1980.00	99.000	1980.00
0.00	**0.0**	**Shear**	**KIPS**	**406.37**	**20.58**	**39.04**	**4.479**	**89.59**	**7.480**	**149.61**
0.00	0.0	Overload	KSI	-33.00	-0.00	-0.00	99.000	1980.00	99.000	1980.00
4.17	10.0	Flexure	KIP-FT	3223.07	77.22	104.12	13.814	276.28	23.069	461.39
4.17	**10.0**	**Shear**	**KIPS**	**406.37**	**16.49**	**30.31**	**5.849**	**116.98**	**9.768**	**195.36**
4.17	10.0	Overload	KSI	33.00	1.84	1.52	11.595	231.91	19.364	387.29
8.33	20.0	Flexure	KIP-FT	3223.07	137.42	185.11	7.576	151.51	12.651	253.02
8.33	20.0	Shear	KIPS	406.37	12.41	26.00	6.914	138.27	11.546	230.92
8.33	**20.0**	**Overload**	**KSI**	**33.00**	**3.27**	**2.71**	**6.206**	**124.12**	**10.364**	**207.27**
12.50	30.0	Flexure	KIP-FT	3223.07	180.62	242.96	5.665	113.31	9.461	189.22
12.50	30.0	Shear	KIPS	406.37	8.33	21.92	8.311	166.22	13.879	277.59
12.50	**30.0**	**Overload**	**KSI**	**33.00**	**4.30**	**3.56**	**4.555**	**91.10**	**7.607**	**152.14**
16.66	40.0	Flexure	KIP-FT	3223.07	206.81	277.66	4.901	98.02	8.184	163.69
16.66	40.0	Shear	KIPS	406.37	4.24	18.08	10.212	204.23	17.053	341.07
16.66	**40.0**	**Overload**	**KSI**	**33.00**	**4.92**	**4.06**	**3.894**	**77.88**	**6.503**	**130.06**
20.83	50.0	Flexure	KIP-FT	3223.07	215.87	289.23	4.686	93.72	7.826	156.51

20.83	50.0	Shear	KIPS	406.37	0.00	14.48	12.930	258.59	21.592	431.85
20.83	**50.0**	**Overload**	**KSI**	**33.00**	**5.14**	**4.23**	**3.708**	**74.15**	**6.192**	**123.84**
25.00	60.0	Flexure	KIP-FT	3223.07	206.75	277.66	4.901	98.02	8.184	163.69
25.00	60.0	Shear	KIPS	406.37	4.24	18.08	10.212	204.23	17.054	341.07
25.00	**60.0**	**Overload**	**KSI**	**33.00**	**4.92**	**4.06**	**3.894**	**77.88**	**6.503**	**130.06**
29.16	70.0	Flexure	KIP-FT	3223.07	180.58	242.96	5.666	113.31	9.461	189.23
29.16	70.0	Shear	KIPS	406.37	8.32	21.92	8.311	166.22	13.880	277.59
29.16	**70.0**	**Overload**	**KSI**	**33.00**	**4.30**	**3.56**	**4.555**	**91.11**	**7.607**	**152.15**
33.33	80.0	Flexure	KIP-FT	3223.07	137.40	185.11	7.576	151.51	12.651	253.03
33.33	80.0	Shear	KIPS	406.37	12.41	26.00	6.914	138.28	11.546	230.92
33.33	**80.0**	**Overload**	**KSI**	**33.00**	**3.27**	**2.71**	**6.206**	**124.12**	**10.364**	**207.28**
37.49	90.0	Flexure	KIP-FT	3223.07	77.20	104.12	13.814	276.28	23.069	461.39
37.49	**90.0**	**Shear**	**KIPS**	**406.37**	**16.49**	**30.31**	**5.849**	**116.99**	**9.768**	**195.37**
37.49	90.0	Overload	KSI	33.00	1.84	1.52	11.595	231.91	19.364	387.29
41.66	100.0	Flexure	KIP-FT	3223.07	0.00	0.00	99.000	1980.00	99.000	1980.00
41.66	**100.0**	**Shear**	**KIPS**	**406.37**	**20.57**	**39.04**	**4.479**	**89.59**	**7.481**	**149.61**
41.66	100.0	Overload	KSI	-33.00	-0.00	-0.00	99.000	1980.00	99.000	1980.00

Detailed Rating Results
HS 20-44
Axle Load
Impact: As Requested
Lane: As Requested

Span 1

Location							Inventory Rating Factor	Inventory Load Rating (Ton)	Operating Rating Factor	Operating Load Rating (Ton)
(ft)	**Percent**	**Limit State**	**Units**	**Capacity**	**DL**	**LL**				
0.00	0.0	Flexure	KIP-FT	3223.07	0.00	0.00	99.000	3564.00	99.000	3564.00
0.00	**0.0**	**Shear**	**KIPS**	**406.37**	**20.58**	**54.66**	**3.199**	**115.17**	**5.342**	**192.33**
0.00	0.0	Overload	KSI	-33.00	-0.00	-0.00	99.000	3564.00	99.000	3564.00
4.17	10.0	Flexure	KIP-FT	3223.07	77.22	179.72	8.004	288.13	13.366	481.17
4.17	**10.0**	**Shear**	**KIPS**	**406.37**	**16.49**	**43.14**	**4.110**	**147.96**	**6.864**	**247.10**
4.17	10.0	Overload	KSI	33.00	1.84	2.63	6.718	241.85	11.219	403.89
8.33	20.0	Flexure	KIP-FT	3223.07	137.42	306.26	4.579	164.84	7.647	275.28
8.33	20.0	Shear	KIPS	406.37	12.41	36.76	4.890	176.05	8.167	294.00
8.33	**20.0**	**Overload**	**KSI**	**33.00**	**3.27**	**4.48**	**3.751**	**135.03**	**6.264**	**225.50**

12.50	30.0	Flexure	KIP-FT	3223.07	180.62	379.63	3.626	130.53	6.055	217.98
12.50	30.0	Shear	KIPS	406.37	8.33	30.38	5.998	215.93	10.017	360.60
12.50	**30.0**	**Overload**	**KSI**	**33.00**	**4.30**	**5.56**	**2.915**	**104.95**	**4.868**	**175.26**
16.66	40.0	Flexure	KIP-FT	3223.07	206.81	419.68	3.242	116.73	5.415	194.93
16.66	40.0	Shear	KIPS	406.37	4.24	24.50	7.535	271.25	12.583	452.99
16.66	**40.0**	**Overload**	**KSI**	**33.00**	**4.92**	**6.14**	**2.576**	**92.75**	**4.302**	**154.89**
20.83	50.0	Flexure	KIP-FT	3223.07	215.87	416.48	3.254	117.15	5.435	195.64
20.83	50.0	Shear	KIPS	406.37	0.00	18.83	9.939	357.82	16.599	597.56
20.83	**50.0**	**Overload**	**KSI**	**33.00**	**5.14**	**6.10**	**2.575**	**92.70**	**4.300**	**154.80**
25.00	60.0	Flexure	KIP-FT	3223.07	206.75	419.68	3.242	116.73	5.415	194.94
25.00	60.0	Shear	KIPS	406.37	4.24	24.50	7.535	271.26	12.583	453.00
25.00	**60.0**	**Overload**	**KSI**	**33.00**	**4.92**	**6.14**	**2.576**	**92.75**	**4.303**	**154.89**
29.16	70.0	Flexure	KIP-FT	3223.07	180.58	379.63	3.626	130.53	6.055	217.98
29.16	70.0	Shear	KIPS	406.37	8.32	30.38	5.998	215.93	10.017	360.61
29.16	**70.0**	**Overload**	**KSI**	**33.00**	**4.30**	**5.56**	**2.915**	**104.95**	**4.869**	**175.27**
33.33	80.0	Flexure	KIP-FT	3223.07	137.40	306.26	4.579	164.84	7.647	275.28
33.33	80.0	Shear	KIPS	406.37	12.41	36.76	4.890	176.05	8.167	294.00
33.33	**80.0**	**Overload**	**KSI**	**33.00**	**3.27**	**4.48**	**3.751**	**135.04**	**6.264**	**225.51**
37.49	90.0	Flexure	KIP-FT	3223.07	77.20	179.72	8.004	288.13	13.366	481.17
37.49	**90.0**	**Shear**	**KIPS**	**406.37**	**16.49**	**43.14**	**4.110**	**147.96**	**6.864**	**247.10**
37.49	90.0	Overload	KSI	33.00	1.84	2.63	6.718	241.86	11.219	403.90
41.66	100.0	Flexure	KIP-FT	3223.07	0.00	0.00	99.000	3564.00	99.000	3564.00
41.66	**100.0**	**Shear**	**KIPS**	**406.37**	**20.57**	**54.66**	**3.199**	**115.17**	**5.343**	**192.33**
41.66	100.0	Overload	KSI	-33.00	-0.00	-0.00	99.000	3564.00	99.000	3564.00

Detailed Rating Results
HS 20-44
Lane
Impact: As Requested
Lane: As Requested

Span 1

Location							Inventory Rating	Inventory Load Rating	Operating Rating	Operating Load Rating
(ft)	**Percent**	**Limit State**	**Units**	**Capacity**	**DL**	**LL**	**Factor**	**(Ton)**	**Factor**	**(Ton)**
0.00	0.0	Flexure	KIP-FT	3223.07	0.00	0.00	99.000	3564.00	99.000	3564.00

0.00	**0.0**	**Shear**	**KIPS**	**406.37**	**20.58**	**39.04**	**4.479**	**161.26**	**7.480**	**269.30**
0.00	0.0	Overload	KSI	-33.00	-0.00	-0.00	99.000	3564.00	99.000	3564.00
4.17	10.0	Flexure	KIP-FT	3223.07	77.22	104.12	13.814	497.30	23.069	830.49
4.17	**10.0**	**Shear**	**KIPS**	**406.37**	**16.49**	**30.31**	**5.849**	**210.57**	**9.768**	**351.66**
4.17	10.0	Overload	KSI	33.00	1.84	1.52	11.595	417.43	19.364	697.11
8.33	20.0	Flexure	KIP-FT	3223.07	137.42	185.11	7.576	272.72	12.651	455.44
8.33	20.0	Shear	KIPS	406.37	12.41	26.00	6.914	248.89	11.546	415.65
8.33	**20.0**	**Overload**	**KSI**	**33.00**	**3.27**	**2.71**	**6.206**	**223.41**	**10.364**	**373.09**
12.50	30.0	Flexure	KIP-FT	3223.07	180.62	242.96	5.665	203.95	9.461	340.60
12.50	30.0	Shear	KIPS	406.37	8.33	21.92	8.311	299.20	13.879	499.66
12.50	**30.0**	**Overload**	**KSI**	**33.00**	**4.30**	**3.56**	**4.555**	**163.99**	**7.607**	**273.86**
16.66	40.0	Flexure	KIP-FT	3223.07	206.81	277.66	4.901	176.43	8.184	294.63
16.66	40.0	Shear	KIPS	406.37	4.24	18.08	10.212	367.62	17.053	613.92
16.66	**40.0**	**Overload**	**KSI**	**33.00**	**4.92**	**4.06**	**3.894**	**140.18**	**6.503**	**234.10**
20.83	50.0	Flexure	KIP-FT	3223.07	215.87	289.23	4.686	168.69	7.826	281.72
20.83	50.0	Shear	KIPS	406.37	0.00	14.48	12.930	465.46	21.592	777.32
20.83	**50.0**	**Overload**	**KSI**	**33.00**	**5.14**	**4.23**	**3.708**	**133.48**	**6.192**	**222.91**
25.00	60.0	Flexure	KIP-FT	3223.07	206.75	277.66	4.901	176.43	8.184	294.64
25.00	60.0	Shear	KIPS	406.37	4.24	18.08	10.212	367.62	17.054	613.93
25.00	**60.0**	**Overload**	**KSI**	**33.00**	**4.92**	**4.06**	**3.894**	**140.19**	**6.503**	**234.12**
29.16	70.0	Flexure	KIP-FT	3223.07	180.58	242.96	5.666	203.96	9.461	340.61
29.16	70.0	Shear	KIPS	406.37	8.32	21.92	8.311	299.20	13.880	499.66
29.16	**70.0**	**Overload**	**KSI**	**33.00**	**4.30**	**3.56**	**4.555**	**163.99**	**7.607**	**273.87**
33.33	80.0	Flexure	KIP-FT	3223.07	137.40	185.11	7.576	272.72	12.651	455.45
33.33	80.0	Shear	KIPS	406.37	12.41	26.00	6.914	248.90	11.546	415.66
33.33	**80.0**	**Overload**	**KSI**	**33.00**	**3.27**	**2.71**	**6.206**	**223.41**	**10.364**	**373.10**
37.49	90.0	Flexure	KIP-FT	3223.07	77.20	104.12	13.814	497.30	23.069	830.50
37.49	**90.0**	**Shear**	**KIPS**	**406.37**	**16.49**	**30.31**	**5.849**	**210.58**	**9.768**	**351.66**
37.49	90.0	Overload	KSI	33.00	1.84	1.52	11.595	417.44	19.364	697.12
41.66	100.0	Flexure	KIP-FT	3223.07	0.00	0.00	99.000	3564.00	99.000	3564.00
41.66	**100.0**	**Shear**	**KIPS**	**406.37**	**20.57**	**39.04**	**4.479**	**161.26**	**7.481**	**269.30**
41.66	100.0	Overload	KSI	-33.00	-0.00	-0.00	99.000	3564.00	99.000	3564.00

Bridge Name: 1031529
NBI Structure ID: 1031529
Bridge ID: 1031529

Analyzed By: BrR
Analyze Date: Tuesday, April 15, 2014 10:54:17
Analysis Engine: AASHTO LFR Engine Version 6.5.0.3001
Analysis Preference Setting: None

Report By: brr
Report Date: Tuesday, April 15, 2014 11:13:08

Structure Definition Name: Span 3 (NB)
Member Name: G7 (S18 plan designation)
Member Alternative Name: 5% Section Loss

Load Factor Rating Summary

Live Load		Rating Factor	Controls	Capacity (Ton)	Location Span	Location (ft)	Location Percent	Impact	Lane
H 20-44	Inventory	2.723	Service - Steel	54.46	1	20.83	50.0	As Requested	As Requested
	Operating	4.548	Service - Steel	90.95	1	20.83	50.0	As Requested	As Requested
HS 20-44	Inventory	2.090	Service - Steel	75.23	1	20.83	50.0	As Requested	As Requested
	Operating	3.490	Service - Steel	125.64	1	20.83	50.0	As Requested	As Requested

Note:
"N/A" indicates not applicable
"**" indicates not available

Individual Vehicle Load Factor Rating Summary

Live Load		Vehicle Type	Rating Factor	Controls	Capacity (Ton)	Location Span	(ft)	Percent	Impact	Lane
H 20-44	Inventory	Lane	3.009	Service - Steel	60.18	1	20.83	50.0	As Requested	As Requested
	Operating	Lane	5.025	Service - Steel	100.51	1	20.83	50.0	As Requested	As Requested
H 20-44	Inventory	Axle Load	2.723	Service - Steel	54.46	1	20.83	50.0	As Requested	As Requested
	Operating	Axle Load	4.548	Service - Steel	90.95	1	20.83	50.0	As Requested	As Requested

Note:
"N/A" indicates not applicable
"**" indicates not available

Reactions
Live Load H 20-44

Support	Stage 1 DL (kip)	Stage 2 DL (kip)	+(LL+I) (kip)	-(LL+I) (kip)	Reaction +IF (%)	Reaction -IF (%)
1	30.11	N/A	23.32(L)	0.00(L)	30.000	0.000
2	30.11	N/A	23.32(L)	0.00(L)	30.000	0.000

Note:
"N/A" indicates not applicable
"**" indicates not available

LL Codes:
(T) Truck load controls
(L) Lane load controls

Note:
Impact and distribution factors included in above live load reactions.

Moments
Live Load H 20-44

Span 1

Location (ft)	Percent	Stage 1 DL (kip-ft)	Stage 2 DL (kip-ft)	+(LL+I) (kip-ft)	-(LL+I) (kip-ft)	+Impact Factor (%)	-Impact Factor (%)
0.00	0.0	-0.00	N/A	-0.00(L)	-0.00(L)	**	**
1.00	2.4	29.26	N/A	30.16(T)	0.00(L)	**	**
4.17	10.0	112.43	N/A	115.15(T)	0.00(L)	**	**
8.33	20.0	199.95	N/A	202.65(T)	0.00(L)	**	**
12.50	30.0	262.56	N/A	262.50(T)	0.00(L)	**	**
16.66	40.0	300.26	N/A	294.69(T)	0.00(L)	**	**
20.83	50.0	313.04	N/A	299.22(T)	0.00(L)	**	**
21.14	50.7	313.00	N/A	299.84(T)	0.00(L)	**	**
25.00	60.0	300.30	N/A	294.69(T)	0.00(L)	**	**
29.16	70.0	262.59	N/A	262.50(T)	0.00(L)	**	**
33.33	80.0	199.97	N/A	202.65(T)	0.00(L)	**	**
37.49	90.0	112.44	N/A	115.15(T)	0.00(L)	**	**
41.66	100.0	-0.00	N/A	0.00(L)	0.00(L)	**	**

Note:
"N/A" indicates not applicable
"**" indicates not available

LL Codes:
(T) Truck load controls
(L) Lane load controls

Note:
Impact and distribution factors included in above live load moments.

Shears
Live Load H 20-44

Span 1

Location (ft)	Percent	Stage 1 DL (kip)	Stage 2 DL (kip)	+(LL+I) (kip)	-(LL+I) (kip)	+Impact Factor (%)	-Impact Factor (%)
0.00	0.0	29.98	N/A	26.47(L)	-0.00(L)	**	**
1.00	2.4	28.54	N/A	31.59(L)	-0.64(T)	**	**
4.17	10.0	24.00	N/A	28.38(L)	-2.66(T)	**	**
8.33	20.0	18.02	N/A	24.34(L)	-5.31(T)	**	**
12.50	30.0	12.04	N/A	21.00(T)	-7.97(T)	**	**
16.66	40.0	6.06	N/A	17.68(T)	-11.05(T)	**	**
20.83	50.0	0.08	N/A	14.36(T)	-14.36(T)	**	**
21.14	50.7	-0.37	N/A	14.12(T)	-14.61(T)	**	**
25.00	60.0	-6.06	N/A	11.05(T)	-17.68(T)	**	**
29.16	70.0	-12.04	N/A	7.97(T)	-21.00(T)	**	**
33.33	80.0	-18.02	N/A	5.31(T)	-24.34(L)	**	**
37.49	90.0	-24.00	N/A	2.66(T)	-28.38(L)	**	**
41.66	100.0	-29.98	N/A	-0.00(L)	-26.47(L)	**	**

Note:
"N/A" indicates not applicable
"**" indicates not available

LL Codes:
(T) Truck load controls
(L) Lane load controls

Note:
Impact and distribution factors included in above live load shears.

Individual Vehicle Load Factor Rating Summary

Live Load		Vehicle Type	Rating Factor	Controls	Capacity (Ton)	Location Span	(ft)	Percent	Impact	Lane
HS 20-44	Inventory	Lane	3.009	Service - Steel	108.33	1	20.83	50.0	As Requested	As Requested
	Operating	Lane	5.025	Service - Steel	180.92	1	20.83	50.0	As Requested	As Requested
HS 20-44	Inventory	Axle Load	2.090	Service - Steel	75.23	1	20.83	50.0	As Requested	As Requested
	Operating	Axle Load	3.490	Service - Steel	125.64	1	20.83	50.0	As Requested	As Requested

Note:
"N/A" indicates not applicable
"**" indicates not available

Reactions
Live Load HS 20-44

Support	Stage 1 DL (kip)	Stage 2 DL (kip)	+(LL+I) (kip)	-(LL+I) (kip)	Reaction +IF (%)	Reaction -IF (%)
1	30.11	N/A	33.12(T)	0.00(L)	30.000	0.000
2	30.11	N/A	33.12(T)	0.00(L)	30.000	0.000

Note:
"N/A" indicates not applicable
"**" indicates not available

LL Codes:
(T) Truck load controls
(L) Lane load controls

Note:
Impact and distribution factors included in above live load reactions.

Moments
Live Load HS 20-44

Span 1

Location (ft)	Percent	Stage 1 DL (kip-ft)	Stage 2 DL (kip-ft)	+(LL+I) (kip-ft)	-(LL+I) (kip-ft)	+Impact Factor (%)	-Impact Factor (%)
0.00	0.0	-0.00	N/A	-0.00(L)	-0.00(L)	**	**
1.00	2.4	29.26	N/A	44.93(T)	0.00(L)	**	**
4.17	10.0	112.43	N/A	168.25(T)	0.00(L)	**	**
8.33	20.0	199.95	N/A	286.71(T)	0.00(L)	**	**
12.50	30.0	262.56	N/A	355.40(T)	0.00(L)	**	**
16.66	40.0	300.26	N/A	392.89(T)	0.00(L)	**	**
20.83	50.0	313.04	N/A	389.90(T)	0.00(L)	**	**
21.14	50.7	313.00	N/A	391.84(T)	0.00(L)	**	**
25.00	60.0	300.30	N/A	392.89(T)	0.00(L)	**	**
29.16	70.0	262.59	N/A	355.40(T)	0.00(L)	**	**
33.33	80.0	199.97	N/A	286.71(T)	0.00(L)	**	**
37.49	90.0	112.44	N/A	168.25(T)	0.00(L)	**	**
41.66	100.0	-0.00	N/A	0.00(L)	0.00(L)	**	**

Note:
"N/A" indicates not applicable
"**" indicates not available

LL Codes:
(T) Truck load controls
(L) Lane load controls

Note:
Impact and distribution factors included in above live load moments.

Shears
Live Load HS 20-44

Span 1

Location (ft)	Percent	Stage 1 DL (kip)	Stage 2 DL (kip)	+(LL+I) (kip)	-(LL+I) (kip)	+Impact Factor (%)	-Impact Factor (%)
0.00	0.0	29.98	N/A	45.64(T)	-0.00(L)	**	**
1.00	2.4	28.54	N/A	44.93(T)	-0.64(T)	**	**
4.17	10.0	24.00	N/A	40.39(T)	-2.66(T)	**	**
8.33	20.0	18.02	N/A	34.41(T)	-5.31(T)	**	**
12.50	30.0	12.04	N/A	28.44(T)	-7.97(T)	**	**
16.66	40.0	6.06	N/A	22.94(T)	-12.32(T)	**	**
20.83	50.0	0.08	N/A	17.63(T)	-17.63(T)	**	**
21.14	50.7	-0.37	N/A	17.23(T)	-18.03(T)	**	**
25.00	60.0	-6.06	N/A	12.32(T)	-22.94(T)	**	**
29.16	70.0	-12.04	N/A	7.97(T)	-28.44(T)	**	**
33.33	80.0	-18.02	N/A	5.31(T)	-34.41(T)	**	**
37.49	90.0	-24.00	N/A	2.66(T)	-40.39(T)	**	**
41.66	100.0	-29.98	N/A	-0.00(L)	-45.64(T)	**	**

Note:
"N/A" indicates not applicable
"**" indicates not available

LL Codes:
(T) Truck load controls
(L) Lane load controls

Note:
Impact and distribution factors included in above live load shears.

Cross Section Properties topic is not available for the specified analysis engine!

Report by Action: ☑ **Flexure** ☑ **Shear** ☑ **Overload** ☑ **Critical**

Detailed Rating Results
H 20-44
Axle Load
Impact: As Requested
Lane: As Requested

Span 1

Location (ft)	Percent	Limit State	Units	Capacity	DL	LL	Inventory Rating Factor	Inventory Load Rating (Ton)	Operating Rating Factor	Operating Load Rating (Ton)
0.00	0.0	Flexure	KIP-FT	2261.53	0.00	0.00	99.000	1980.00	99.000	1980.00
0.00	**0.0**	**Shear**	**KIPS**	**390.11**	**29.98**	**26.36**	**6.135**	**122.71**	**10.246**	**204.92**
0.00	0.0	Overload	KSI	-33.00	-0.00	-0.00	99.000	1980.00	99.000	1980.00
1.00	2.4	Flexure	KIP-FT	2261.53	29.26	30.16	33.954	679.07	56.703	1134.05
1.00	**2.4**	**Shear**	**KIPS**	**390.11**	**28.54**	**30.16**	**5.391**	**107.81**	**9.002**	**180.04**
1.00	2.4	Overload	KSI	33.00	1.21	0.71	25.260	505.20	42.184	843.68
4.17	10.0	Flexure	KIP-FT	2858.69	112.43	115.15	10.850	217.00	18.120	362.39
4.17	**10.0**	**Shear**	**KIPS**	**390.11**	**24.00**	**27.64**	**5.981**	**119.62**	**9.988**	**199.76**
4.17	10.0	Overload	KSI	33.00	3.07	1.93	8.779	175.58	14.661	293.22
8.33	20.0	Flexure	KIP-FT	2858.69	199.95	202.65	5.907	118.14	9.864	197.29
8.33	20.0	Shear	KIPS	390.11	18.02	24.32	6.944	138.89	11.597	231.94
8.33	**20.0**	**Overload**	**KSI**	**33.00**	**5.47**	**3.39**	**4.566**	**91.33**	**7.626**	**152.52**
12.50	30.0	Flexure	KIP-FT	2858.69	262.56	262.50	4.417	88.35	7.377	147.54
12.50	30.0	Shear	KIPS	390.11	12.04	21.00	8.212	164.24	13.714	274.29
12.50	**30.0**	**Overload**	**KSI**	**33.00**	**7.18**	**4.40**	**3.292**	**65.84**	**5.498**	**109.96**
16.66	40.0	Flexure	KIP-FT	2858.69	300.26	294.69	3.858	77.16	6.443	128.86
16.66	40.0	Shear	KIPS	390.11	6.06	17.68	9.956	199.12	16.627	332.53
16.66	**40.0**	**Overload**	**KSI**	**33.00**	**8.21**	**4.94**	**2.807**	**56.15**	**4.688**	**93.77**
20.83	50.0	Flexure	KIP-FT	2858.69	313.04	299.22	3.774	75.48	6.303	126.06
20.83	50.0	Shear	KIPS	390.11	0.08	14.36	12.506	250.12	20.885	417.69
20.83	**50.0**	**Overload**	**KSI**	**33.00**	**8.56**	**5.01**	**2.723**	**54.46**	**4.548**	**90.95**
25.00	60.0	Flexure	KIP-FT	2858.69	300.30	294.69	3.858	77.16	6.443	128.86
25.00	60.0	Shear	KIPS	390.11	6.06	17.68	9.956	199.12	16.627	332.53
25.00	**60.0**	**Overload**	**KSI**	**33.00**	**8.21**	**4.94**	**2.807**	**56.15**	**4.688**	**93.76**

29.16	70.0	Flexure	KIP-FT	2858.69	262.59	262.50	4.417	88.34	7.377	147.54
29.16	70.0	Shear	KIPS	390.11	12.04	21.00	8.212	164.24	13.714	274.29
29.16	**70.0**	**Overload**	**KSI**	**33.00**	**7.18**	**4.40**	**3.292**	**65.84**	**5.498**	**109.95**
33.33	80.0	Flexure	KIP-FT	2858.69	199.97	202.65	5.907	118.13	9.864	197.28
33.33	80.0	Shear	KIPS	390.11	18.02	24.32	6.944	138.89	11.597	231.94
33.33	**80.0**	**Overload**	**KSI**	**33.00**	**5.47**	**3.39**	**4.566**	**91.33**	**7.626**	**152.51**
37.49	90.0	Flexure	KIP-FT	2858.69	112.44	115.15	10.850	217.00	18.120	362.39
37.49	**90.0**	**Shear**	**KIPS**	**390.11**	**24.00**	**27.64**	**5.981**	**119.62**	**9.988**	**199.76**
37.49	90.0	Overload	KSI	33.00	3.07	1.93	8.779	175.58	14.661	293.22
41.66	100.0	Flexure	KIP-FT	2858.69	0.00	0.00	99.000	1980.00	99.000	1980.00
41.66	**100.0**	**Shear**	**KIPS**	**390.11**	**29.98**	**26.36**	**6.135**	**122.71**	**10.246**	**204.92**
41.66	100.0	Overload	KSI	-33.00	-0.00	-0.00	99.000	1980.00	99.000	1980.00

Detailed Rating Results
H 20-44
Lane
Impact: As Requested
Lane: As Requested

Span 1

Location							Inventory Rating	Inventory Load Rating	Operating Rating	Operating Load Rating
(ft)	**Percent**	**Limit State**	**Units**	**Capacity**	**DL**	**LL**	**Factor**	**(Ton)**	**Factor**	**(Ton)**
0.00	0.0	Flexure	KIP-FT	2261.53	0.00	0.00	99.000	1980.00	99.000	1980.00
0.00	**0.0**	**Shear**	**KIPS**	**390.11**	**29.98**	**26.47**	**6.109**	**122.19**	**10.203**	**204.05**
0.00	0.0	Overload	KSI	-33.00	-0.00	-0.00	99.000	1980.00	99.000	1980.00
1.00	2.4	Flexure	KIP-FT	2261.53	29.26	25.37	40.363	807.26	67.406	1348.12
1.00	**2.4**	**Shear**	**KIPS**	**390.11**	**28.54**	**31.59**	**5.147**	**102.93**	**8.595**	**171.90**
1.00	2.4	Overload	KSI	33.00	1.21	0.60	30.028	600.56	50.147	1002.94
4.17	10.0	Flexure	KIP-FT	2858.69	112.43	97.48	12.818	256.35	21.405	428.11
4.17	**10.0**	**Shear**	**KIPS**	**390.11**	**24.00**	**28.38**	**5.826**	**116.52**	**9.729**	**194.58**
4.17	10.0	Overload	KSI	33.00	3.07	1.63	10.371	207.42	17.320	346.40
8.33	20.0	Flexure	KIP-FT	2858.69	199.95	173.29	6.908	138.15	11.536	230.71
8.33	20.0	Shear	KIPS	390.11	18.02	24.34	6.940	138.79	11.589	231.78
8.33	**20.0**	**Overload**	**KSI**	**33.00**	**5.47**	**2.90**	**5.340**	**106.80**	**8.918**	**178.36**
12.50	30.0	Flexure	KIP-FT	2858.69	262.56	227.45	5.098	101.96	8.514	170.27

12.50	30.0	Shear	KIPS	390.11	12.04	20.52	8.405	168.09	14.036	280.71
12.50	**30.0**	**Overload**	**KSI**	**33.00**	**7.18**	**3.81**	**3.799**	**75.99**	**6.345**	**126.90**
16.66	40.0	Flexure	KIP-FT	2858.69	300.26	259.94	4.374	87.48	7.304	146.09
16.66	40.0	Shear	KIPS	390.11	6.06	16.93	10.401	208.03	17.370	347.41
16.66	**40.0**	**Overload**	**KSI**	**33.00**	**8.21**	**4.35**	**3.183**	**63.65**	**5.315**	**106.30**
20.83	50.0	Flexure	KIP-FT	2858.69	313.04	270.77	4.171	83.41	6.965	139.30
20.83	50.0	Shear	KIPS	390.11	0.08	13.55	13.255	265.10	22.136	442.72
20.83	**50.0**	**Overload**	**KSI**	**33.00**	**8.56**	**4.53**	**3.009**	**60.18**	**5.025**	**100.51**
25.00	60.0	Flexure	KIP-FT	2858.69	300.30	259.94	4.374	87.48	7.304	146.09
25.00	60.0	Shear	KIPS	390.11	6.06	16.93	10.401	208.03	17.370	347.40
25.00	**60.0**	**Overload**	**KSI**	**33.00**	**8.21**	**4.35**	**3.183**	**63.65**	**5.315**	**106.30**
29.16	70.0	Flexure	KIP-FT	2858.69	262.59	227.45	5.098	101.96	8.514	170.27
29.16	70.0	Shear	KIPS	390.11	12.04	20.52	8.405	168.09	14.036	280.71
29.16	**70.0**	**Overload**	**KSI**	**33.00**	**7.18**	**3.81**	**3.799**	**75.99**	**6.345**	**126.90**
33.33	80.0	Flexure	KIP-FT	2858.69	199.97	173.29	6.907	138.15	11.535	230.71
33.33	80.0	Shear	KIPS	390.11	18.02	24.34	6.939	138.79	11.589	231.78
33.33	**80.0**	**Overload**	**KSI**	**33.00**	**5.47**	**2.90**	**5.340**	**106.80**	**8.918**	**178.35**
37.49	90.0	Flexure	KIP-FT	2858.69	112.44	97.48	12.818	256.35	21.405	428.11
37.49	**90.0**	**Shear**	**KIPS**	**390.11**	**24.00**	**28.38**	**5.826**	**116.52**	**9.729**	**194.58**
37.49	90.0	Overload	KSI	33.00	3.07	1.63	10.371	207.42	17.320	346.40
41.66	100.0	Flexure	KIP-FT	2858.69	0.00	0.00	99.000	1980.00	99.000	1980.00
41.66	**100.0**	**Shear**	**KIPS**	**390.11**	**29.98**	**26.47**	**6.109**	**122.19**	**10.202**	**204.05**
41.66	100.0	Overload	KSI	-33.00	-0.00	-0.00	99.000	1980.00	99.000	1980.00

Detailed Rating Results
HS 20-44
Axle Load
Impact: As Requested
Lane: As Requested

Span 1

Location							Inventory Rating	Inventory Load Rating	Operating Rating	Operating Load Rating
(ft)	**Percent**	**Limit State**	**Units**	**Capacity**	**DL**	**LL**	**Factor**	**(Ton)**	**Factor**	**(Ton)**
0.00	0.0	Flexure	KIP-FT	2261.53	0.00	0.00	99.000	3564.00	99.000	3564.00
0.00	**0.0**	**Shear**	**KIPS**	**390.11**	**29.98**	**45.64**	**3.544**	**127.57**	**5.918**	**213.04**
0.00	0.0	Overload	KSI	-33.00	-0.00	-0.00	99.000	3564.00	99.000	3564.00

1.00	2.4	Flexure	KIP-FT	2261.53	29.26	44.93	22.797	820.70	38.071	1370.57
1.00	**2.4**	**Shear**	**KIPS**	**390.11**	**28.54**	**44.93**	**3.619**	**130.30**	**6.044**	**217.59**
1.00	2.4	Overload	KSI	33.00	1.21	1.06	16.960	610.56	28.323	1019.64
4.17	10.0	Flexure	KIP-FT	2858.69	112.43	168.25	7.426	267.35	12.402	446.47
4.17	**10.0**	**Shear**	**KIPS**	**390.11**	**24.00**	**40.39**	**4.094**	**147.37**	**6.836**	**246.11**
4.17	10.0	Overload	KSI	33.00	3.07	2.82	6.009	216.32	10.035	361.25
8.33	20.0	Flexure	KIP-FT	2858.69	199.95	286.71	4.175	150.30	6.972	251.00
8.33	20.0	Shear	KIPS	390.11	18.02	34.41	4.908	176.70	8.197	295.09
8.33	**20.0**	**Overload**	**KSI**	**33.00**	**5.47**	**4.80**	**3.228**	**116.19**	**5.390**	**194.04**
12.50	30.0	Flexure	KIP-FT	2858.69	262.56	355.40	3.263	117.46	5.449	196.15
12.50	30.0	Shear	KIPS	390.11	12.04	28.44	6.066	218.36	10.130	364.66
12.50	**30.0**	**Overload**	**KSI**	**33.00**	**7.18**	**5.95**	**2.432**	**87.54**	**4.061**	**146.19**
16.66	40.0	Flexure	KIP-FT	2858.69	300.26	392.89	2.894	104.18	4.833	173.98
16.66	40.0	Shear	KIPS	390.11	6.06	22.94	7.675	276.29	12.817	461.41
16.66	**40.0**	**Overload**	**KSI**	**33.00**	**8.21**	**6.58**	**2.106**	**75.81**	**3.517**	**126.60**
20.83	50.0	Flexure	KIP-FT	2858.69	313.04	389.90	2.896	104.27	4.837	174.13
20.83	50.0	Shear	KIPS	390.11	0.08	17.63	10.190	366.83	17.017	612.61
20.83	**50.0**	**Overload**	**KSI**	**33.00**	**8.56**	**6.53**	**2.090**	**75.23**	**3.490**	**125.64**
25.00	60.0	Flexure	KIP-FT	2858.69	300.30	392.89	2.894	104.18	4.833	173.97
25.00	60.0	Shear	KIPS	390.11	6.06	22.94	7.675	276.29	12.817	461.41
25.00	**60.0**	**Overload**	**KSI**	**33.00**	**8.21**	**6.58**	**2.106**	**75.80**	**3.516**	**126.59**
29.16	70.0	Flexure	KIP-FT	2858.69	262.59	355.40	3.263	117.45	5.449	196.15
29.16	70.0	Shear	KIPS	390.11	12.04	28.44	6.066	218.36	10.129	364.66
29.16	**70.0**	**Overload**	**KSI**	**33.00**	**7.18**	**5.95**	**2.431**	**87.53**	**4.061**	**146.18**
33.33	80.0	Flexure	KIP-FT	2858.69	199.97	286.71	4.175	150.30	6.972	251.00
33.33	80.0	Shear	KIPS	390.11	18.02	34.41	4.908	176.70	8.197	295.09
33.33	**80.0**	**Overload**	**KSI**	**33.00**	**5.47**	**4.80**	**3.228**	**116.19**	**5.390**	**194.04**
37.49	90.0	Flexure	KIP-FT	2858.69	112.44	168.25	7.426	267.35	12.402	446.47
37.49	**90.0**	**Shear**	**KIPS**	**390.11**	**24.00**	**40.39**	**4.094**	**147.37**	**6.836**	**246.11**
37.49	90.0	Overload	KSI	33.00	3.07	2.82	6.009	216.32	10.035	361.25
41.66	100.0	Flexure	KIP-FT	2858.69	0.00	0.00	99.000	3564.00	99.000	3564.00
41.66	**100.0**	**Shear**	**KIPS**	**390.11**	**29.98**	**45.64**	**3.544**	**127.57**	**5.918**	**213.04**
41.66	100.0	Overload	KSI	-33.00	-0.00	-0.00	99.000	3564.00	99.000	3564.00

Detailed Rating Results
HS 20-44

Lane
Impact: As Requested
Lane: As Requested

Span 1

Location							Inventory Rating	Inventory Load Rating	Operating Rating	Operating Load Rating
(ft)	Percent	Limit State	Units	Capacity	DL	LL	Factor	(Ton)	Factor	(Ton)
0.00	0.0	Flexure	KIP-FT	2261.53	0.00	0.00	99.000	3564.00	99.000	3564.00
0.00	**0.0**	**Shear**	**KIPS**	**390.11**	**29.98**	**26.47**	**6.109**	**219.94**	**10.203**	**367.29**
0.00	0.0	Overload	KSI	-33.00	-0.00	-0.00	99.000	3564.00	99.000	3564.00
1.00	2.4	Flexure	KIP-FT	2261.53	29.26	25.37	40.363	1453.07	67.406	2426.62
1.00	**2.4**	**Shear**	**KIPS**	**390.11**	**28.54**	**31.59**	**5.147**	**185.28**	**8.595**	**309.41**
1.00	2.4	Overload	KSI	33.00	1.21	0.60	30.028	1081.02	50.147	1805.30
4.17	10.0	Flexure	KIP-FT	2858.69	112.43	97.48	12.818	461.44	21.405	770.60
4.17	**10.0**	**Shear**	**KIPS**	**390.11**	**24.00**	**28.38**	**5.826**	**209.73**	**9.729**	**350.25**
4.17	10.0	Overload	KSI	33.00	3.07	1.63	10.371	373.36	17.320	623.52
8.33	20.0	Flexure	KIP-FT	2858.69	199.95	173.29	6.908	248.67	11.536	415.28
8.33	20.0	Shear	KIPS	390.11	18.02	24.34	6.940	249.82	11.589	417.20
8.33	**20.0**	**Overload**	**KSI**	**33.00**	**5.47**	**2.90**	**5.340**	**192.24**	**8.918**	**321.04**
12.50	30.0	Flexure	KIP-FT	2858.69	262.56	227.45	5.098	183.53	8.514	306.49
12.50	30.0	Shear	KIPS	390.11	12.04	20.52	8.405	302.56	14.036	505.28
12.50	**30.0**	**Overload**	**KSI**	**33.00**	**7.18**	**3.81**	**3.799**	**136.78**	**6.345**	**228.42**
16.66	40.0	Flexure	KIP-FT	2858.69	300.26	259.94	4.374	157.46	7.304	262.96
16.66	40.0	Shear	KIPS	390.11	6.06	16.93	10.401	374.45	17.370	625.33
16.66	**40.0**	**Overload**	**KSI**	**33.00**	**8.21**	**4.35**	**3.183**	**114.58**	**5.315**	**191.35**
20.83	50.0	Flexure	KIP-FT	2858.69	313.04	270.77	4.171	150.15	6.965	250.74
20.83	50.0	Shear	KIPS	390.11	0.08	13.55	13.255	477.19	22.136	796.90
20.83	**50.0**	**Overload**	**KSI**	**33.00**	**8.56**	**4.53**	**3.009**	**108.33**	**5.025**	**180.92**
25.00	60.0	Flexure	KIP-FT	2858.69	300.30	259.94	4.374	157.46	7.304	262.96
25.00	60.0	Shear	KIPS	390.11	6.06	16.93	10.401	374.45	17.370	625.32
25.00	**60.0**	**Overload**	**KSI**	**33.00**	**8.21**	**4.35**	**3.183**	**114.57**	**5.315**	**191.34**
29.16	70.0	Flexure	KIP-FT	2858.69	262.59	227.45	5.098	183.53	8.514	306.49
29.16	70.0	Shear	KIPS	390.11	12.04	20.52	8.405	302.56	14.036	505.28
29.16	**70.0**	**Overload**	**KSI**	**33.00**	**7.18**	**3.81**	**3.799**	**136.78**	**6.345**	**228.41**
33.33	80.0	Flexure	KIP-	2858.69	199.97	173.29	6.907	248.67	11.535	415.28

			FT							
33.33	80.0	Shear	KIPS	390.11	18.02	24.34	6.939	249.82	11.589	417.20
33.33	**80.0**	**Overload**	**KSI**	**33.00**	**5.47**	**2.90**	**5.340**	**192.24**	**8.918**	**321.03**
37.49	90.0	Flexure	KIP-FT	2858.69	112.44	97.48	12.818	461.43	21.405	770.59
37.49	**90.0**	**Shear**	**KIPS**	**390.11**	**24.00**	**28.38**	**5.826**	**209.73**	**9.729**	**350.25**
37.49	90.0	Overload	KSI	33.00	3.07	1.63	10.371	373.36	17.320	623.51
41.66	100.0	Flexure	KIP-FT	2858.69	0.00	0.00	99.000	3564.00	99.000	3564.00
41.66	**100.0**	**Shear**	**KIPS**	**390.11**	**29.98**	**26.47**	**6.109**	**219.93**	**10.202**	**367.29**
41.66	100.0	Overload	KSI	-33.00	-0.00	-0.00	99.000	3564.00	99.000	3564.00

RECORD DRAWINGS

P.I.N. 0471

FED. RD. REG. NO.	STATE	FEDERAL AID PROJECT NO.	SHEET NO.	TOTAL SHEETS
1	NEW YORK	I-81-2(80)	201	26

INTERSTATE ROUTE 505
SYRACUSE CITY LINE TO SIZER STREET

B Opalka 3/85
Team Leader Opalka 9/90
3/1/89
P.J.B. 1989
P.J.R. 9/91
Opalka 9/13/93

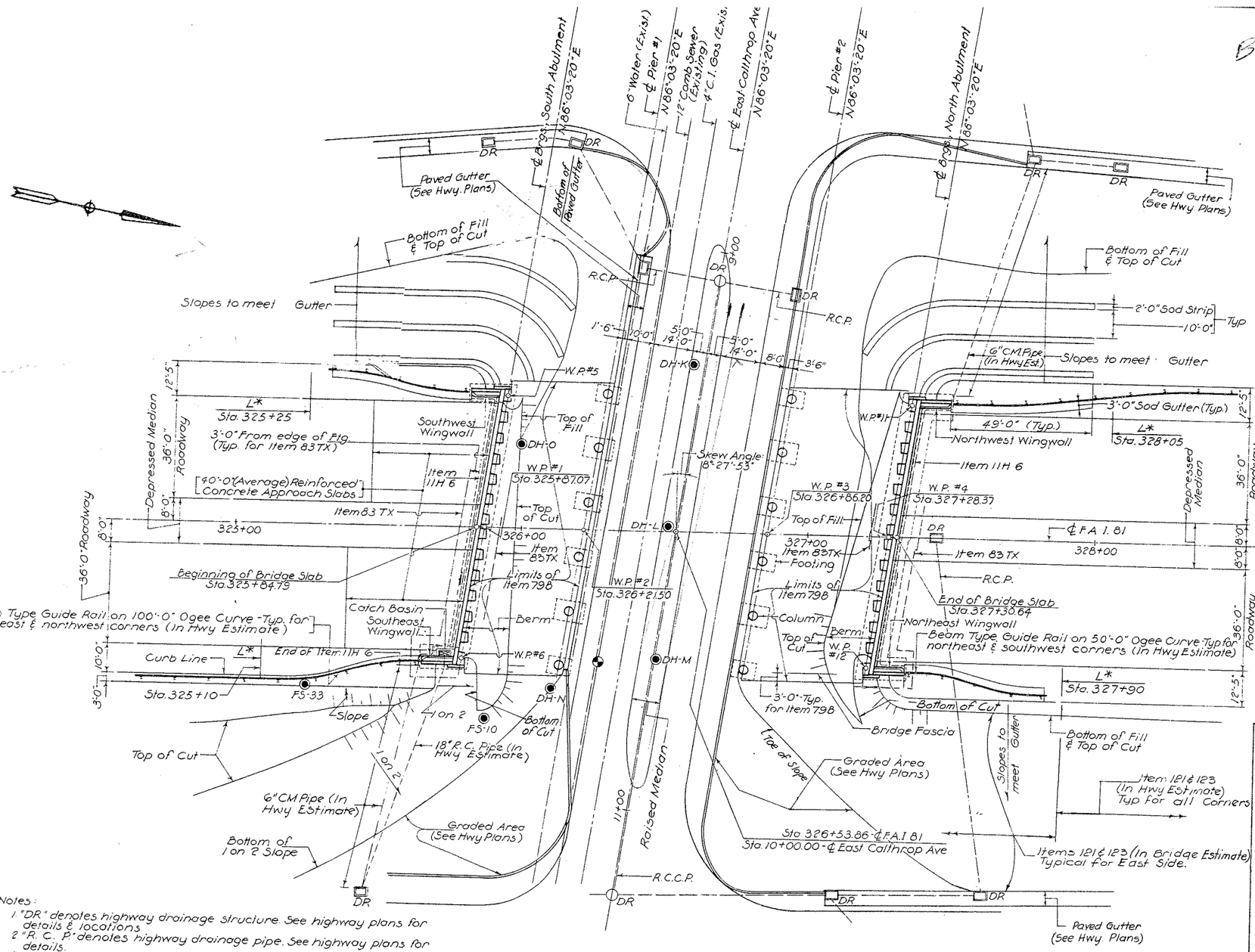

Notes:
1. "DR" denotes highway drainage structure. See highway plans for details & locations.
2. "R. C. P." denotes highway drainage pipe. See highway plans for details.
3. Grading and Layout Plan shown with bridge superstructure & cap beams of piers removed.
4. All existing utilities shown in "Grading and Layout Plan" to be abandoned.

GRADING AND LAYOUT PLAN
SCALE: 1" = 20'

Point of Min. Vertical Clearance
Location of Boring
L* Denotes Limits of Items 121, 123 & 124 in Bridge Estimate.

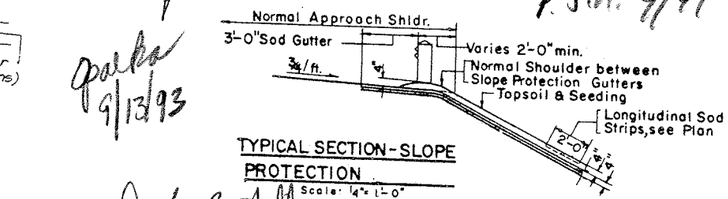

TYPICAL SECTION - SLOPE PROTECTION
Scale: ¼" = 1'-0"

Typ. for all corners except Southeast corner.

Douglas P Hillegas 8/29/95
Douglas P Hillegas 11/25/97
Douglas P Hillegas 11/4/99

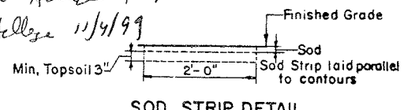

SOD STRIP DETAIL
Douglas P Hillegas 11/6/01 Scale: ¾" = 1'-0"

Stacy M Cole 10/17/02

1 17 Traverse Isolation 15/16/09

RMLN 2013

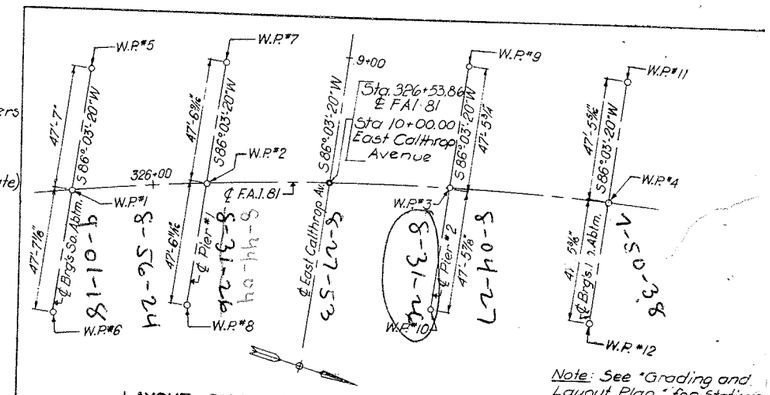

LAYOUT DIAGRAM FOR WORKING POINTS
N.T.S.

Note: See "Grading and Layout Plan" for Stations of Primary Working points.

PREPARED AND RECOMMENDED BY LEONARD S. WEGMAN CO.
BY Leonard Stanwell
N.Y.S. P.E. LIC. 23287 12-9-63

F.A.I. 81 OVER EAST CALTHROP AVENUE
GRADING AND LAYOUT PLAN

DRAWN BY:	CHECKED BY:	LEONARD S. WEGMAN CO. ENGINEERS	SCALE AS NOTED
HL	FG / LS		
REVIEWED BY: Leonard Stanwell	DATE 12-9-63	235 EAST 45TH STREET, NEW YORK 17, N.Y.	DWG. NO. F-2

DRIVE PRINT, INC., BROOKLYN 17, N.Y. REPRODUCIBLE NO. 4606

F.I.C. 64-7

FED. RD. REG. NO.	STATE	FEDERAL AID PROJECT NO.	SHEET NO.
1	NEW YORK	I-81-2(80)	202

INTERSTATE ROUTE 505
SYRACUSE CITY LINE TO SIZER ST

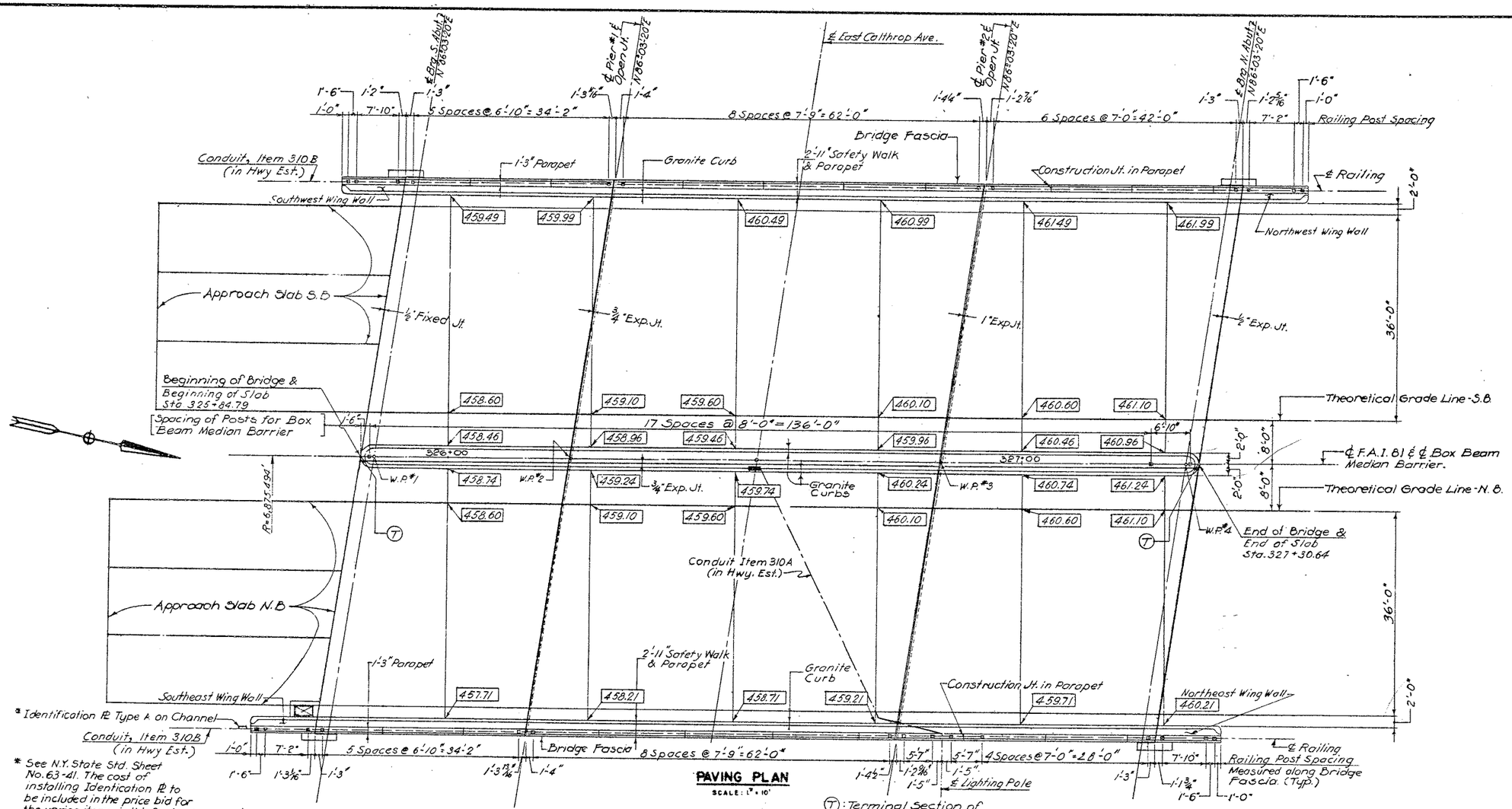

PAVING PLAN
SCALE: 1" = 10'

* See N.Y. State Std. Sheet No. 63-41. The cost of installing Identication Rt to be included in the price bid for the varios items in this Contract.

(T): Terminal Section of Box Beam Median Barrier See sheet No. F-21 for Details

: Top of pavement elevation, (25' intervals)

NOTE: EACH CONDUIT PASSING THROUGH AN EXPANSION JOINT SHALL BE PROVIDED WITH AN EXPANSION FITTING. THE EXPANSION FITTING DETAIL IS SHOWN ON DWG. NO. LD-1. PAYMENT OF FURNISHING AND INSTALLING EXPANSION FITTINGS SHALL BE INCLUDED IN CONDUIT ITEMS (IN HWY. ESTIMATE).

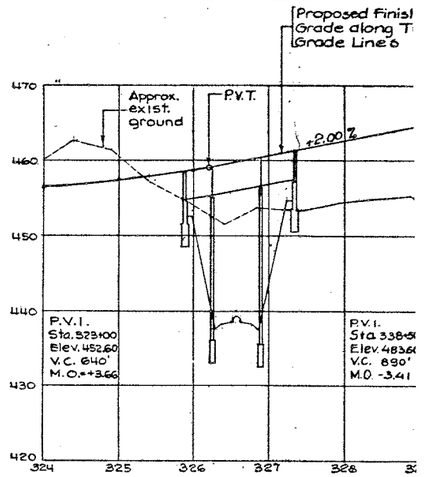

F.A.I. 81

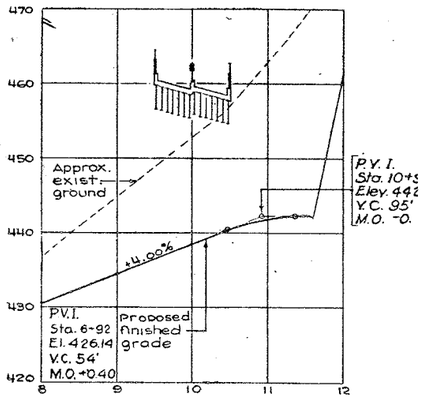

EAST CALTHROP AVE

PROFILES
SCALE

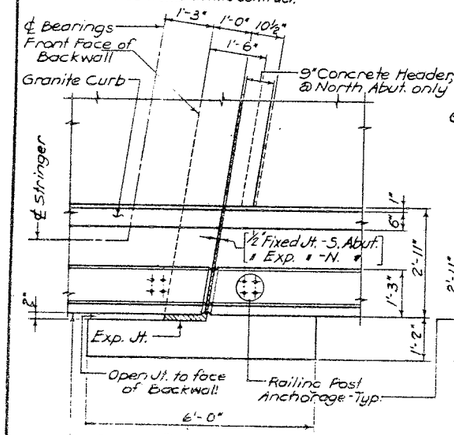

PARTIAL PLAN OF EXPANSION JOINT AT ABUTMENT

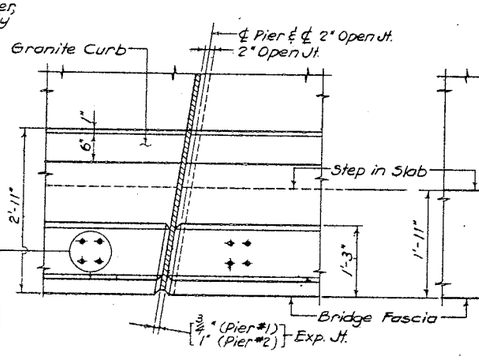

PARTIAL PLAN - AT TOP OF SAFETY WALK AND PARAPET
SCALE: 3/4" = 1'-0"

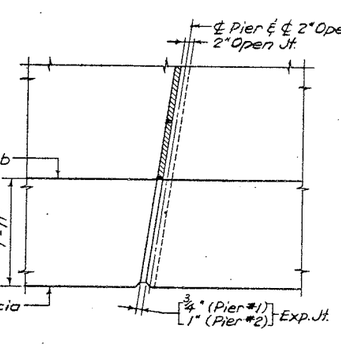

PARTIAL PLAN - AT TOP OF SLAB UNDER SAFETY WALK
SCALE: 3/4" = 1'-0"

EXPANSION JOINT OVER PIER

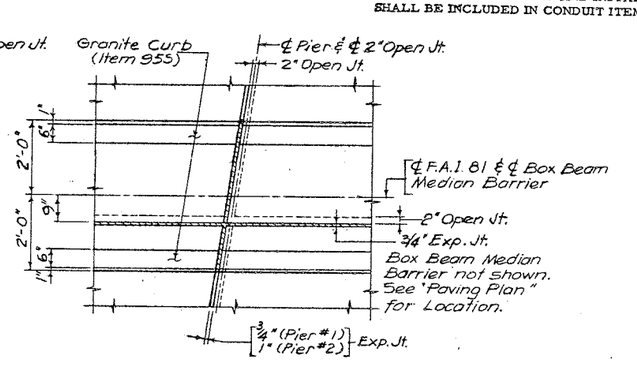

PARTIAL PLAN - AT TOP OF RAISED MALL
SCALE: 1/2" = 1'-0"

NOTES:
1. ALL DIMENSIONS
2. FOR LOCATION NOS. F-17 &
3. SEE DWG
4. SEE
5.
6.

PREPARED AND RECOMMENDED BY
LEONARD S. WEGMAN CO.
BY
N.Y.S. P.E. LIC. 23287 DATE 12

F.I.C. 64-7

FED. RD. REG. NO.	STATE	FEDERAL AID PROJECT NO.	SHEET NO.	TOTAL SHEETS
1	NEW YORK	I-81-2(80)	203	289

INTERSTATE ROUTE 505
SYRACUSE CITY LINE TO SIZER STREET

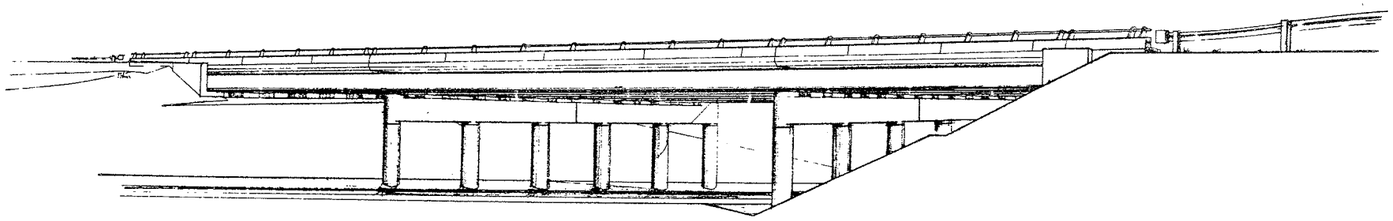

EAST ELEVATION

SCALE: 1" = 10'

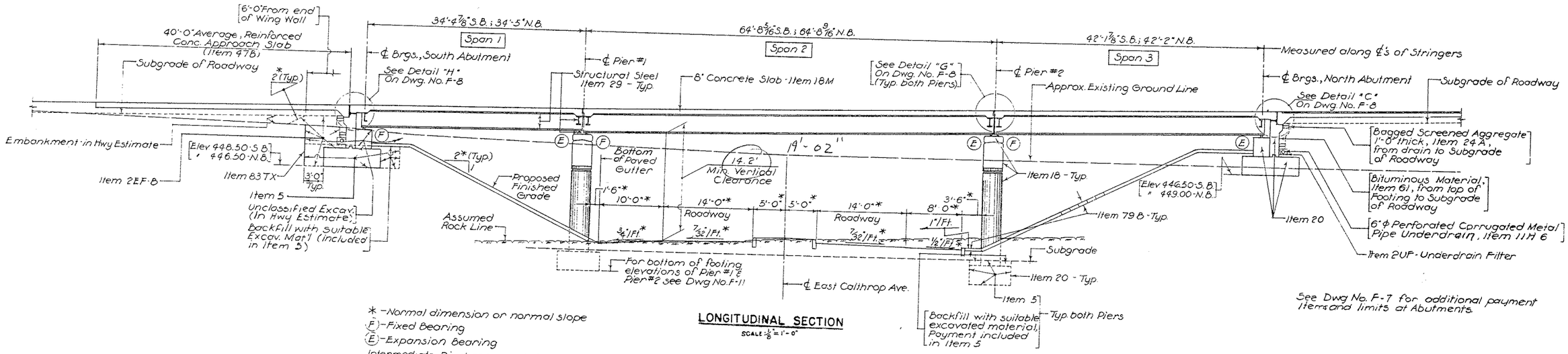

LONGITUDINAL SECTION

SCALE 1/8" = 1'-0"

* - Normal dimension or normal slope
(F) - Fixed Bearing
(E) - Expansion Bearing
Intermediate Diaphragms not shown.
Excavation for Item 79B shall be paid for under Item 5.

See Dwg No. F-7 for additional payment items and limits at Abutments.

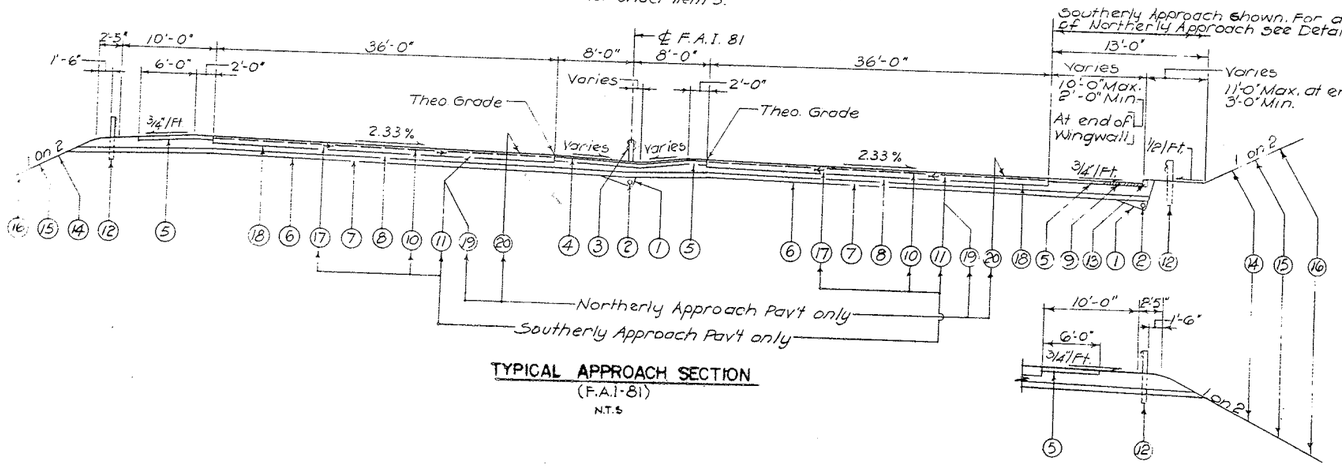

TYPICAL APPROACH SECTION
(F.A.I. 81)

N.T.S.

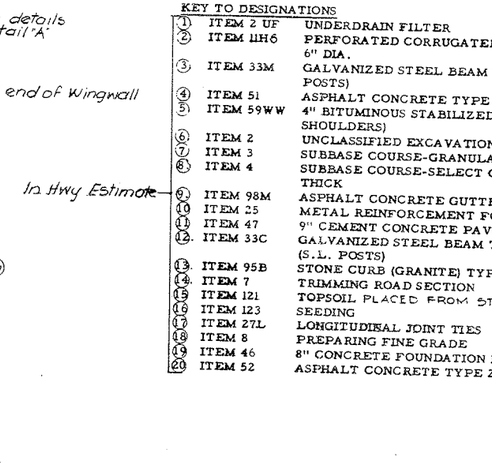

DETAIL "A"

N.T.S.

KEY TO DESIGNATIONS

(1)	ITEM 2 UF	UNDERDRAIN FILTER
(2)	ITEM 11H6	PERFORATED CORRUGATED METAL PIPE UNDERDRAIN - 6" DIA.
(3)	ITEM 33M	GALVANIZED STEEL BEAM TYPE MALL BARRIER (8B10 POSTS)
(4)	ITEM 51	ASPHALT CONCRETE TYPE 1A - 1 1/2" THICK
(5)	ITEM 59WW	4" BITUMINOUS STABILIZED GRAVEL COURSE (INCLUDING SHOULDERS)
(6)	ITEM 2	UNCLASSIFIED EXCAVATION
(7)	ITEM 3	SUBBASE COURSE-GRANULAR MATERIAL - 8" THICK
(8)	ITEM 4	SUBBASE COURSE-SELECT GRANULAR MATERIAL - 4" THICK
(9)	ITEM 98M	ASPHALT CONCRETE GUTTERS
(10)	ITEM 25	METAL REINFORCEMENT FOR CONCRETE PAVEMENT
(11)	ITEM 47	9" CEMENT CONCRETE PAVEMENT
(12)	ITEM 33C	GALVANIZED STEEL BEAM TYPE GUIDE RAILING (S.L. POSTS)
(13)	ITEM 95B	STONE CURB (GRANITE) TYPE B
(14)	ITEM 7	TRIMMING ROAD SECTION
(15)	ITEM 121	TOPSOIL PLACED FROM STOCKPILES.
(16)	ITEM 123	SEEDING
(17)	ITEM 27L	LONGITUDINAL JOINT TIES
(18)	ITEM 8	PREPARING FINE GRADE
(19)	ITEM 46	8" CONCRETE FOUNDATION FOR PAVEMENT
(20)	ITEM 52	ASPHALT CONCRETE TYPE 2A - 2 1/2" THICK

PREPARED AND RECOMMENDED BY
LEONARD S. WEGMAN CO.
BY [signature]
N.Y.S. P.E. LIC. 23287 DATE 12-9-63

F.A.I. 81 OVER EAST CALTHROP AVENUE
EAST ELEVATION LONGITUDINAL SECTION AND APPROACH SECTION

DRAWN BY:	CHECKED BY:	SCALE
HL BB	FG RP	AS NOTED
REVISED BY:	DATE	DWG. NO.
[signature]	12-9-63	F-4

LEONARD S. WEGMAN CO.
ENGINEERS
235 EAST 45TH STREET, NEW YORK 17, N.Y.

FED. RD. REG. NO.	STATE	FEDERAL AID PROJECT NO.	SHEET NO.
1	NEW YORK	I-81-2(80)	204

INTERSTATE ROUTE 505
SYRACUSE CITY LINE TO SIZER STRE

9-01-18

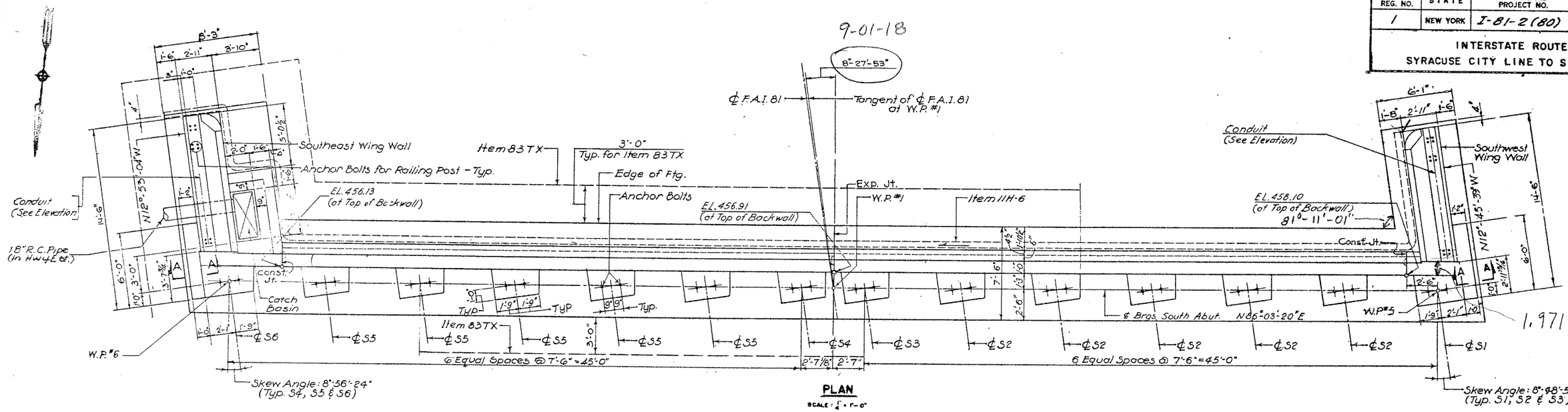

PLAN
SCALE: 1/4" = 1'-0"

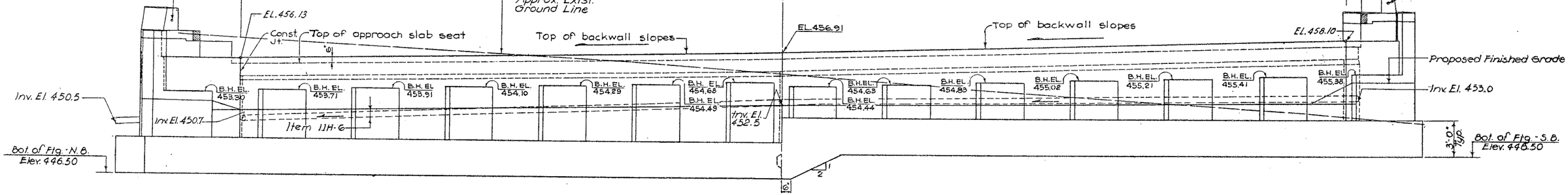

ELEVATION
SCALE: 1/4" = 1'-0"

SUBSTRUCTURE NOTES

1. TOP OF BACKWALLS ON WHICH ASBESTOS SHEET PACKING IS TO BE PLACED SHALL BE STEEL TROWEL FINISHED.
2. BITUMINOUS MATERIAL, ITEM 61, SHALL BE APPLIED TO THE BACKS OF ALL ABUTMENTS AND WINGWALLS ABOVE TOP OF FOOTINGS, WHERE FILL IS IN CONTACT WITH THE WALLS.
3. EPOXY PROTECTIVE COATING FOR CONCRETE SHALL BE APPLIED TO THE FOLLOWING SURFACES:
   ABUTMENTS - ALL EXPOSED PEDESTAL SURFACES, BRIDGE SEATS; EXPOSED VERTICAL SURFACES OF BACKWALL AND CURTAIN WALLS FACING THE SUPERSTRUCTURE.
   PIERS - ALL PEDESTAL SURFACES AND THE TOP SURFACES OF PIER BETWEEN PEDESTALS INCLUDING THE EDGE CHAMFER AT TOP EDGE OF PIER.
4. THE MAXIMUM FOUNDATION PRESSURES FOR DESIGN PURPOSES: ABUTMENT - 1.5 TONS PER SQUARE FOOT; PIER - 5 TONS PER SQUARE FOOT.
5. UNLESS OTHERWISE SHOWN, THE MINIMUM CONCRETE COVER FOR REINFORCING STEEL IN THE SUBSTRUCTURE SHALL BE AS FOLLOWS:

FOOTINGS (INCLUDING UNFORMED BOTTOM)	3"
WALLS ABOVE FOOTINGS	2"
BEAMS AND COLUMNS OF PIERS	2"

6. ITEM 83TX TO BE USED ONLY WHERE DEPTH OF EXCAVATION EXCEEDS 5 FEET.

NOTES:
1. TOP OF BACKWALL IS HORIZONTAL WITHIN THE AREAS MARKED "H", AND SLOPED WITHIN THE AREAS MARKED "S".
2. TYPICAL ABUTMENT SECTION, TYPICAL WING WALL SECTION AND WING WALL ELEVATION ARE SHOWN ON DWG. NO. F-7.
3. SECTION A-A AND DETAILS OF JOINTS AND CATCH BASIN ARE SHOWN ON DWG. NO. F-8.
4. ADDITIONAL PAYMENT ITEMS AND LIMITS FOR ABUTMENT AND WING WALLS ARE SHOWN ON DWG. NOS. F-2, F-4 & F-7.
5. FOR SPACING OF RAILING POSTS AND RAILING DETAILS SEE DWG. NOS. F-17 & F-18.

PREPARED AND RECOMMENDED BY LEONARD S. WEGMAN CO.
BY _____
N.Y.S. P.E. LIC. 23287 DATE 12-9-63

F.A.I. 81 OVER EAST CALTHROP AVENUE
SOUTH ABUTMENT

DRAWN BY:	CHECKED BY:	LEONARD S. WEGMAN CO. ENGINEERS	SCALE AS NOTED
S.B. M.B.	WNL F.A.	235 EAST 43TH STREET, NEW YORK 17, N.Y.	DWG. NO. F-4
REVIEWED BY:	DATE 12-9-63		

F.I.C. 64-7

FED. RD. REG. NO.	STATE	FEDERAL AID PROJECT NO.	SHEET NO.	TOTAL SHEETS
1	NEW YORK	I-81-2 (80)	205	289

INTERSTATE ROUTE 505
SYRACUSE CITY LINE TO SIZER STREET

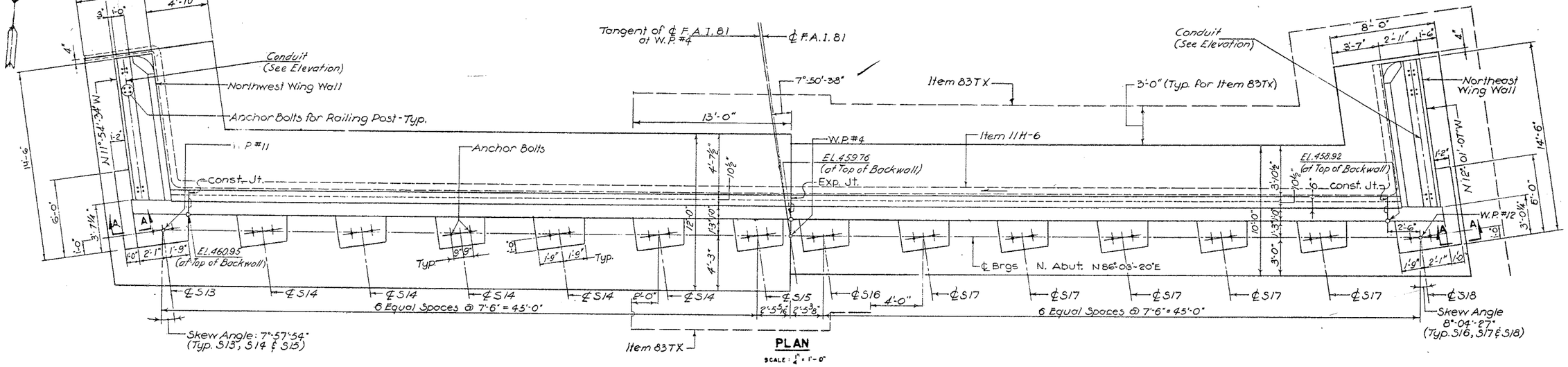

PLAN
SCALE: 1/4" = 1'-0"

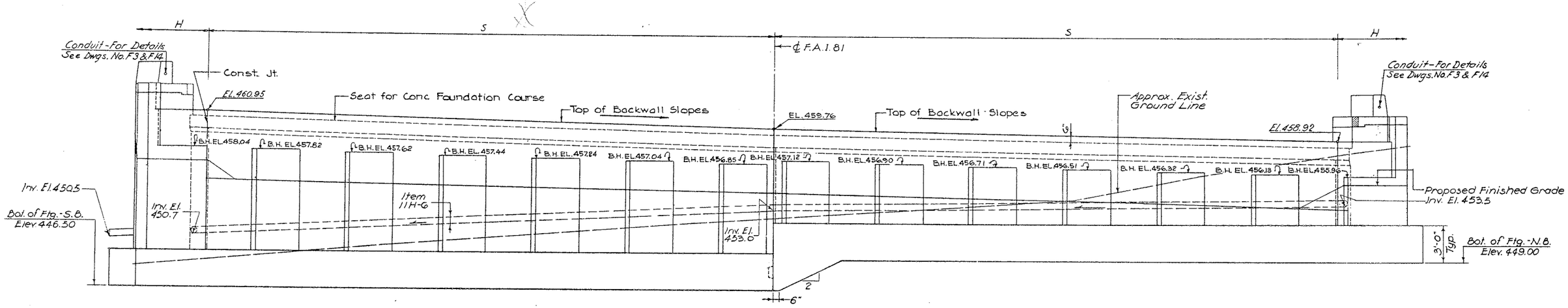

ELEVATION
Scale: 1/4" = 1'-0"

NOTES:
1. FOR SUBSTRUCTURE NOTES SEE DWG. NO. F-5.
2. TYPICAL ABUTMENT SECTION, TYPICAL WING WALL SECTION AND WING WALL ELEVATION ARE SHOWN ON DWG. NO. F-7.
3. SECTION A-A AND DETAILS OF JOINTS ARE SHOWN ON DWG. NO. F-8.
4. TOP OF BACKWALL IS HORIZONTAL WITHIN THE AREAS MARKED "H" AND SLOPED WITHIN THE AREAS MARKED "S".
5. ADDITIONAL PAYMENT ITEMS AND LIMITS FOR ABUTMENT AND WING WALLS ARE SHOWN ON DWG. NOS. F-2, F-4 & F-7.
6. FOR SPACING OF RAILING POSTS AND RAILING DETAILS SEE DWG. NOS. F-17 & F-18.

459.76
44825
11 51

F.A.I. 81 OVER EAST CALTHROP AVENUE
NORTH ABUTMENT

PREPARED AND RECOMMENDED BY LEONARD S. WEGMAN CO.
BY [signature]
N.Y.S.P.E. LIC. 23287 DATE 12-9-63

DRAWN BY: MB HL	CHECKED BY: WNL [signature]	LEONARD S. WEGMAN CO. ENGINEERS 235 EAST 45TH STREET, NEW YORK 17, N.Y.	SCALE AS NOTED
REVIEWED BY: [signature]	DATE 12-9-63		DWG. NO. F-6

1031247

F.I.C. 64-1

FED. RD. REG. NO.	STATE	FEDERAL AID PROJECT NO.	SHEET NO.	TOTAL SHEETS
1	NEW YORK	I-81-2(80)	206	289

INTERSTATE ROUTE 505
SYRACUSE CITY LINE TO SIZER STREET

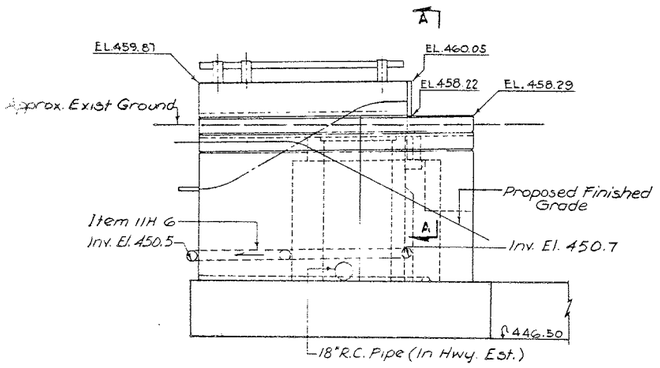

SOUTH EAST WING WALL

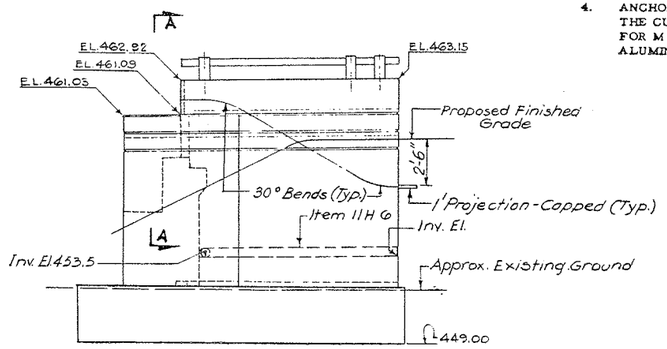

NORTH EAST WING WALL

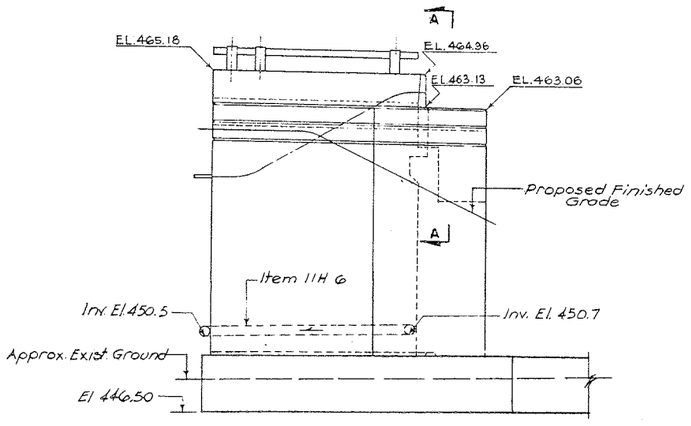

NORTH WEST WING WALL

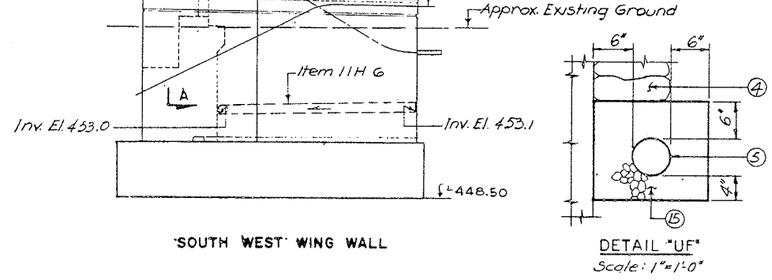

'SOUTH WEST' WING WALL

DETAIL "UF"
Scale: 1"=1'-0"

NOTES:
1. FOR SUBSTRUCTURE NOTES SEE DWG. NO. F-5.
2. FOR SPACING OF RAILING POSTS AND RAILING DETAILS SEE DWG. NOS. F-17 & F-18.
3. SECTION A-A AND DETAILS OF JOINTS AND CATCH BASIN AS SHOWN ON DWG. NO. F-8.
4. FOR ADDITIONAL PAYMENT ITEMS AND LIMITS SEE DWG. NOS. F-2, F-5 & F-6.

WINGWALL CONSTRUCTION PROCEDURE
1. POUR CONCRETE BELOW CONSTRUCTION JOINT 'A' SHOWN ON DETAIL "A".
2. SET STONE CURBS (GRANITE) & POUR SAFETY WALKS TO PROPER LINE AND GRADE. SAFETY WALK NOT TO BE SCORED.
3. SET RAILING ANCHOR BOLTS BY MEANS OF TEMPLATE AND POUR PARAPET. ERECT RAILING.
4. ANCHOR BOLTS SHALL BE CUT OFF 1/8" ABOVE NUT AND PEENED. THE CUT TOPS SHALL BE PAINTED AS REQUIRED BY THE SPECIFICATIONS FOR M 18A, EXCEPT THAT THE FINAL TWO (2) COATS SHALL BE ALUMINUM PAINT COMPLYING WITH THE SPECIFICATIONS FOR M18J.

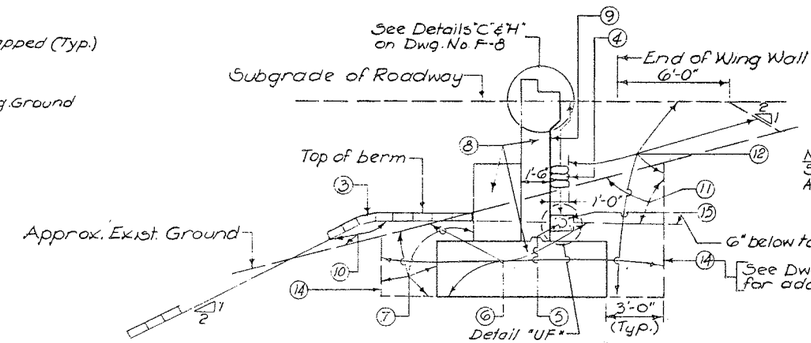

Note For Diagram 1: See Diagram 2 For Abutment Reinforcement

DIAGRAM 1 PAYMENT LIMITS AT ABUTMENT WHERE EXISTING GROUND IS BELOW SUBGRADE.
N.T.S.

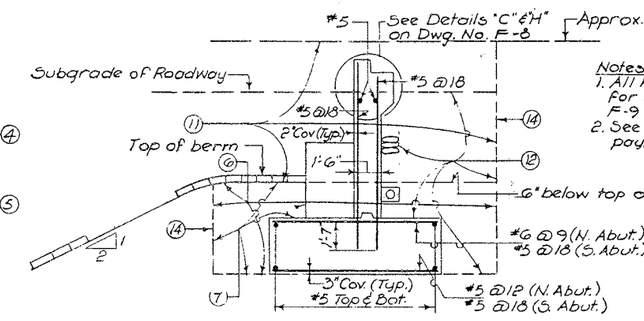

Notes for Diagram 2:
1. All Reinforcement to be paid for under Item 28. See Dwg. No. F-9 for Reinforcement details.
2. See Diagram 1 for additional payment items and limits.

DIAGRAM 2 PAYMENT LIMITS AT ABUTMENT WHERE EXISTING GROUND IS ABOVE SUBGRADE.
N.T.S.

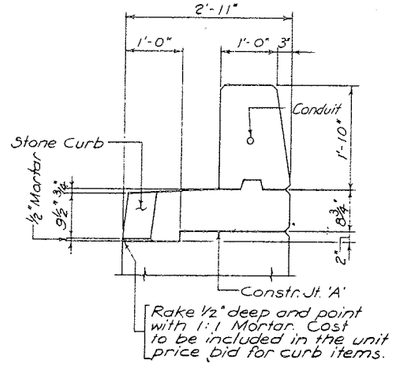

Railing & Reinforcement not shown

DETAIL "A"
SCALE: 3/4" = 1'-0"

ELEVATIONS
SCALE: 1/4" = 1'-0"

KEY TO DESIGNATIONS FOR DIAGRAMS 1 THRU 4

(1)	ITEM 95S	STONE CURB (GRANITE)
(2)	ITEM 18	CLASS A CONCRETE FOR STRUCTURES
(3)	ITEM 79B	CONCRETE BLOCK PAVING
(4)	ITEM 24A	BAGGED SCREENED AGGREGATE
(5)	ITEM 11H6	PERFORATED CORRUGATED METAL PIPE UNDERDRAIN - 6" DIA.
(6)	ITEM 5	TRENCH, CULVERT AND BRIDGE EXCAVATION
(7)	———	BACKFILL WITH SUITABLE EXCAVATED MATERIAL (INCLUDED IN ITEM 5)
(8)	ITEM 20	CLASS B CONCRETE FOR STRUCTURES
(9)	ITEM 61	BITUMINOUS MATERIAL
(10)	———	BACKFILL WITH SUITABLE EXCAVATED MATERIAL WHERE NECESSARY (IN HWY. ESTIMATE)
(11)	———	UNCLASSIFIED EXCAVATION (IN HWY. ESTIMATE)
(12)	ITEM 2EF-B	SELECTED GRANULAR FILL
(13)	ITEM 37AL4	ALUMINUM RAILING (ONE RAIL)
(14)	ITEM 85TX	TEMPORARY SHEET PILING
(15)	ITEM 2UF	UNDERDRAIN FILTER
(16)	ITEM 121	TOPSOIL PLACED FROM STOCKPILES
(17)	ITEM 123	SEEDING
(18)	ITEM 124	SODDING

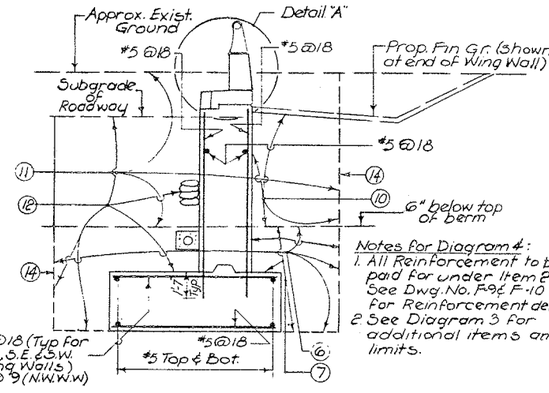

Notes for Diagram 4:
1. All Reinforcement to be paid for under Item 28. See Dwg. No. F-9 & F-10 for Reinforcement details.
2. See Diagram 3 for additional items and limits.

DIAGRAM 4 PAYMENT LIMITS AT WING WALL WHERE EXISTING GROUND IS ABOVE SUBGRADE.
N.T.S.

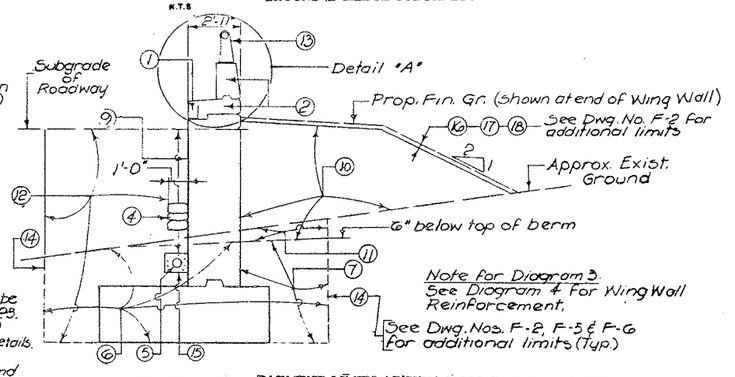

Note for Diagram 3: See Diagram 4 For Wing Wall Reinforcement.

DIAGRAM 3 PAYMENT LIMITS AT WING WALL WHERE EXISTING GROUND IS BELOW SUBGRADE.
N.T.S.

PREPARED AND RECOMMENDED BY
LEONARD S. WEGMAN CO.
BY Hubert Lewandowski
N.Y.S. P.E. LIC. 23267 DATE 12-9-63

F.A.I. 81 OVER EAST CALTHROP AVENUE
ABUTMENT DETAILS

DRAWN BY:	CHECKED BY:	LEONARD S. WEGMAN CO. ENGINEERS	SCALE AS NOTED
BB	WNL	235 EAST 45th STREET, NEW YORK 17, N.Y.	DWG. NO. F-7
REVIEWED BY: Hubert Lewandowski	DATE 12-9-63		

F.I.C. 64-7

FED. RD. REG. NO.	STATE	FEDERAL AID PROJECT NO	SHEET NO.	T SH
1	NEW YORK	I-81-2(80)	207	2

INTERSTATE ROUTE 505
SYRACUSE CITY LINE TO SIZER STREET

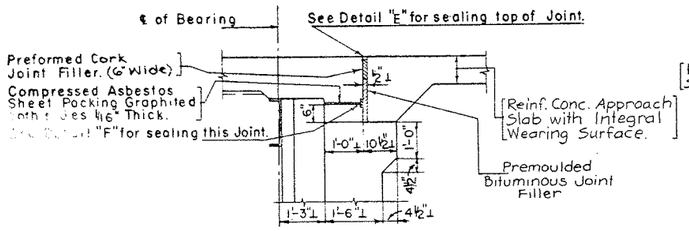

DETAIL "H"
Scale: ½" = 1'-0"

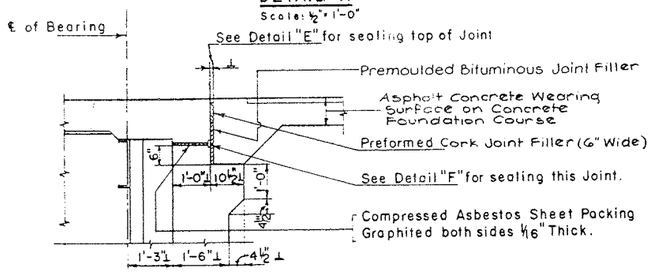

DETAIL "C"
Scale: ½" = 1'-0"

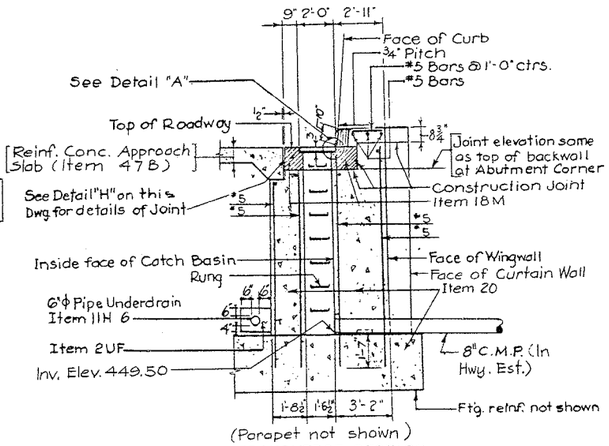

(Parapet not shown)
TRANSVERSE SECTION

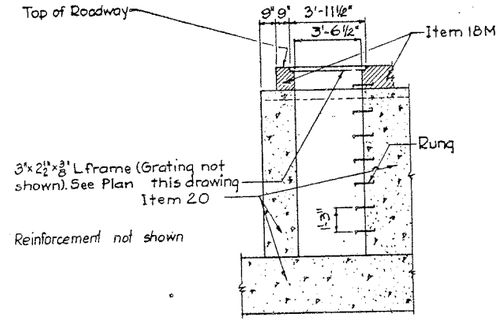

LONGITUDINAL SECTION

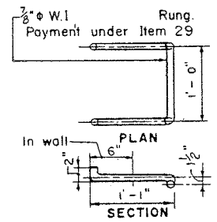

DETAIL OF RUNG

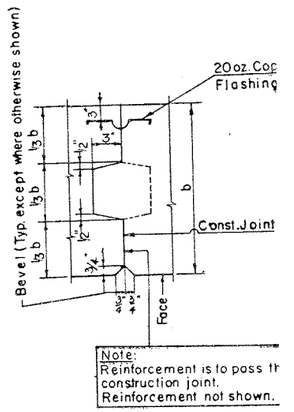

Note:
Reinforcement is to pass th construction joint.
Reinforcement not shown.

TYPICAL KEY AND JOINT DETAIL FOR VERTICAL CONSTRUCTION JOIN IN STEM
no scale

*RECTANGULAR FRAME & GRATE		
No.	FRAME SIZE	GRATE SIZE
5	1'-11 15/16" x 3'-11½"	1'-10 11/16" x 3'-10½"

*See Standard Dwg. No 61-45A Paid for under Item 30F

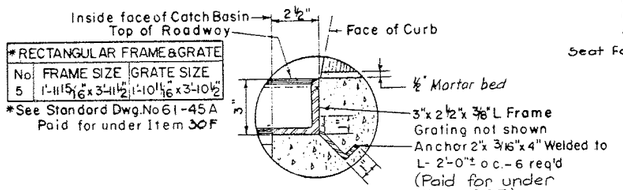

DETAIL "A"

Note:
The cross-hatched portion of concrete to be placed to grade of roadway after the bridge slab is completed.

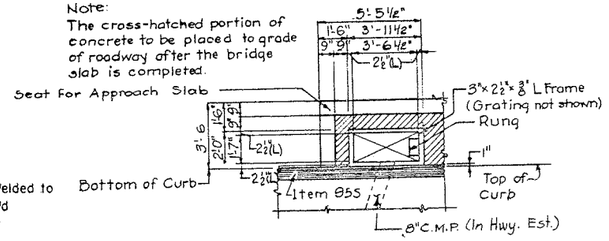

PLAN OF CATCH BASIN

CATCH BASIN DETAILS
NO SCALE

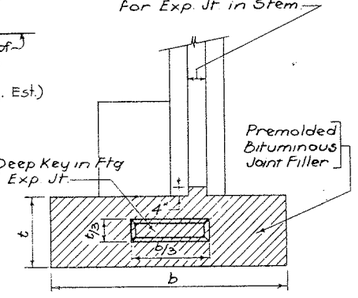

EXPANSION JOINT IN FOOTING
NO SCALE

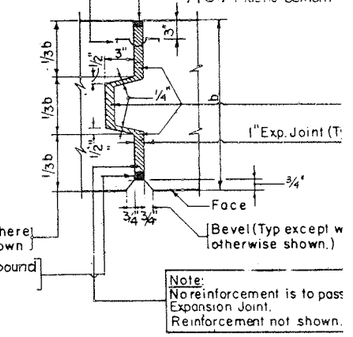

Note:
No reinforcement is to pass Expansion Joint.
Reinforcement not shown.

TYPICAL KEY AND JOINT DETAIL FOR VERTICAL EXPANSION JOINT IN STEM
NO SCALE

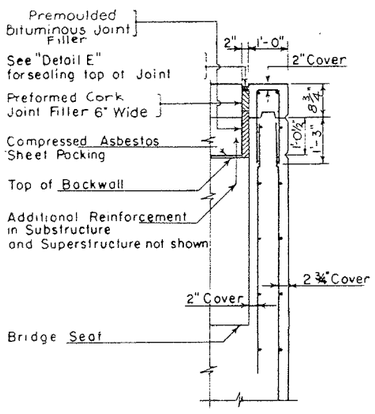

SECTION A-A
NO SCALE

(TYPICAL SECTION THRU CHEEK WALL)

Southwest & Northeast Wing Walls shown
Northwest & Southeast " " opposite hand

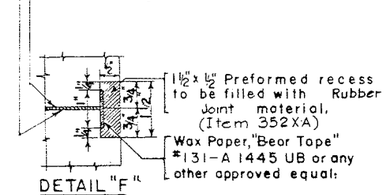

DETAIL "F"
Scale: Half Size

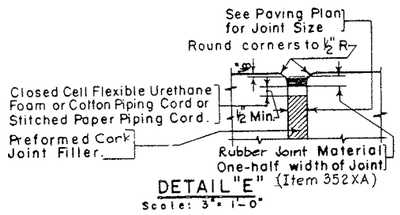

DETAIL "E"
Scale: 3" = 1'-0"

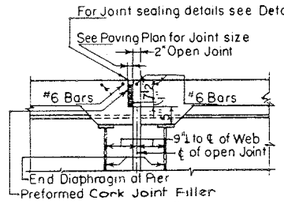

DETAIL "G"
Scale: ½" = 1'-0"

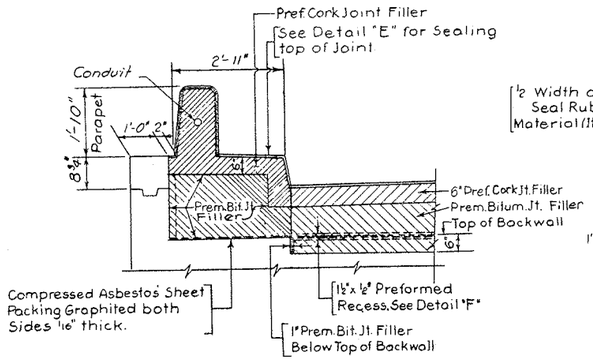

AT ABUTMENT

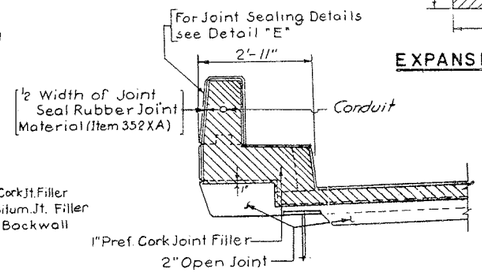

AT PIER

TRANSVERSE SECTIONS ALONG JOINT
NO SCALE

F.A.I. 81 OVER EAST CALTHROP AVENUE
DETAILS OF JOINTS AND CATCH BASIN

PREPARED AND RECOMMENDED BY
LEONARD S. WEGMAN CO.
BY _____
N.Y.S. P.E. LIC. 23287 DATE 12-9-63

DRAWN BY: BE ERC	CHECKED BY: HG GLG	LEONARD S. WEGMAN CO. ENGINEERS	SCALE AS NOTED
REVIEWED BY:	DATE 12-9-63	235 EAST 45th STREET, NEW YORK	DWG. NO. F-

FED. NO. REG. NO.	STATE	FEDERAL AID PROJECT NO.	SHEET NO.	TOTAL SHEETS
1	NEW YORK	I-81-2 (80)	208	2

INTERSTATE ROUTE 505
SYRACUSE CITY LINE TO SIZER STREET

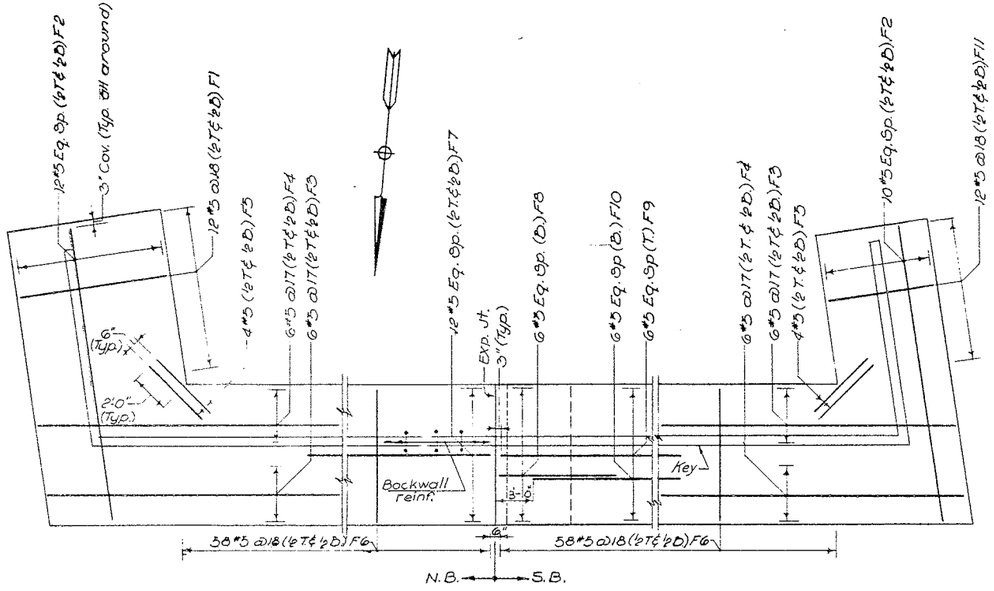

SOUTH ABUTMENT

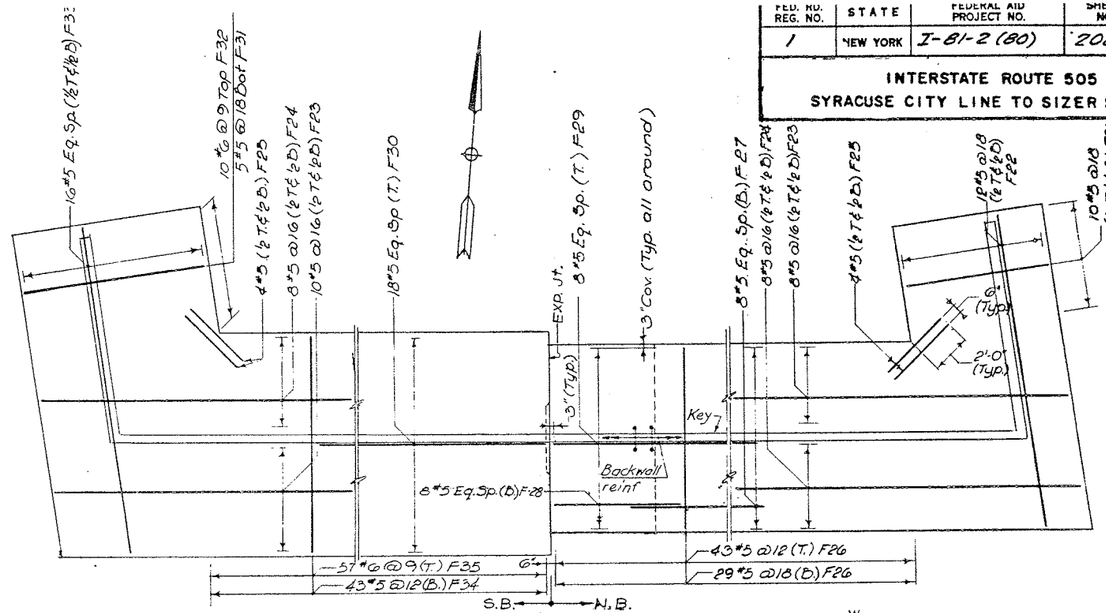

NORTH ABUTMENT

FOOTING REINFORCEMENT

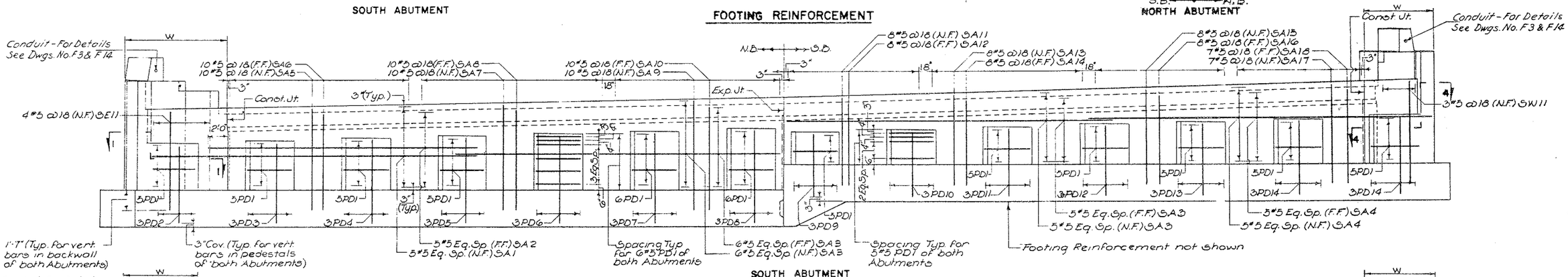

STEM REINFORCEMENT

NOTES:
1. ALL BAR REINFORCEMENT SHOWN ON THIS DRAWING WILL BE PAID FOR UNDER ITEM 28.
2. WORK THIS DRAWING WITH DWG. NOS. F-5, F-6 & F-14.
3. FOR SECTIONS 1-1 THROUGH 4-4 SEE DWG. NO. F-10.

PREPARED AND RECOMMENDED BY
LEONARD S. WEGMAN CO.
BY _____
N.Y.S. P.E. LIC. 23287 DATE 12-9-63

F.A.I. 81 OVER EAST CALTHROP AVENUE

ABUTMENT REINFORCEMENT DETAILS I

DRAWN BY:	CHECKED BY:	LEONARD S. WEGMAN CO. ENGINEERS	SCALE
BB	WNL	235 EAST 45TH STREET, NEW YORK 17, N.Y.	NO SCALE
REVIEWED BY:	DATE		DWG. NO.
	12-9-63		F-

SIMPLEX FORMS INC., CINCINNATI 17, O. T. DEPOSITED, DR. 4884

1031529

F.I.C. 64-7

NOTES:
1. ALL BAR REINFORCEMENT SHOWN ON THIS DRAWING WILL BE PAID FOR UNDER ITEM 28.
2. WORK THIS DRAWING WITH DWG. NOS. F-5, F-6, F-7, F-9 & F-14.

FED. RD. REG. NO.	STATE	FEDERAL AID PROJECT NO.	SHEET NO.	
1	NEW YORK	I-81-2(80)	209	2

INTERSTATE ROUTE 505
SYRACUSE CITY LINE TO SIZER STREE

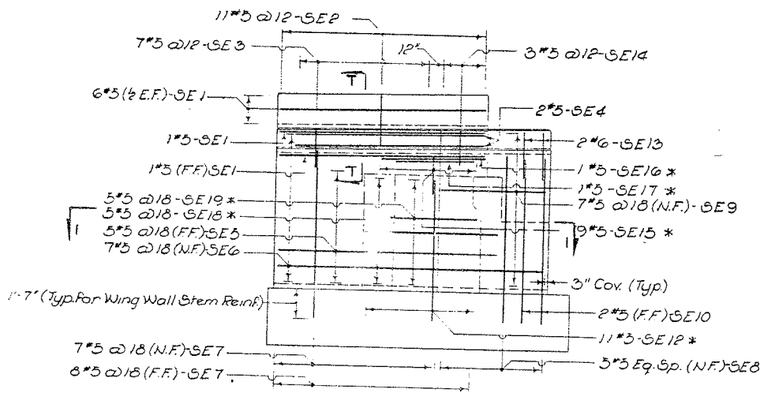

* For Location of bars see 'Reinf. at Top of Catch Basin' and Section 1-1 *

SOUTH EAST WING WALL

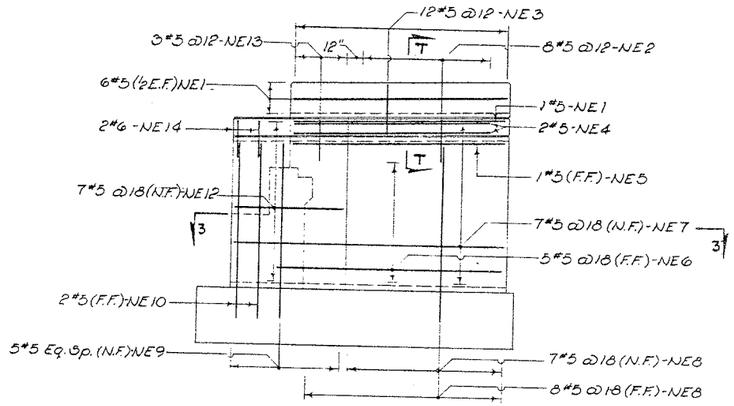

NORTH EAST WING WALL

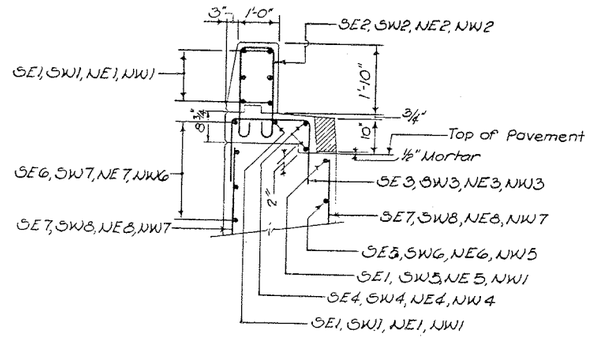

SECTION T-T

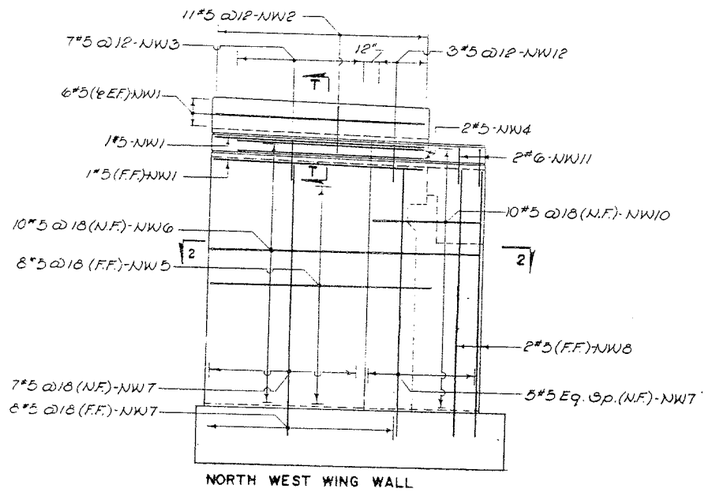

NORTH WEST WING WALL

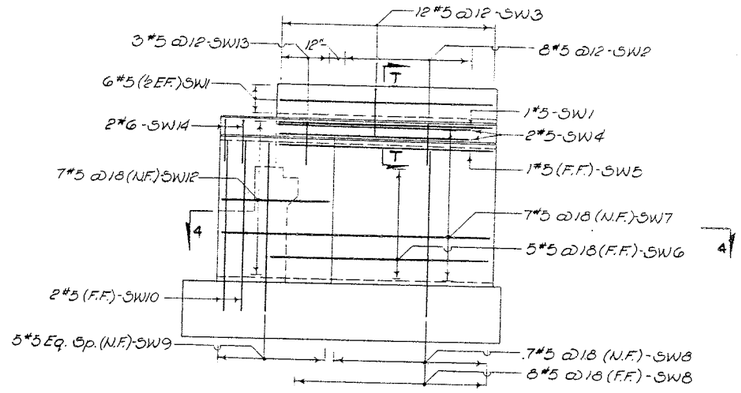

SOUTH WEST WING WALL

WING WALL REINFORCEMENT

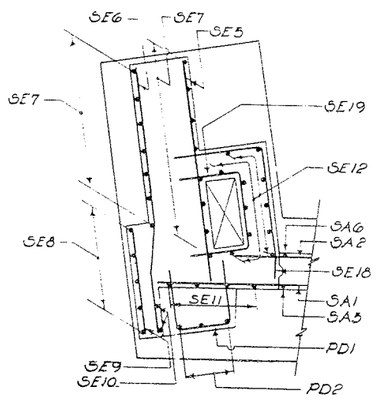

SECTION 1-1

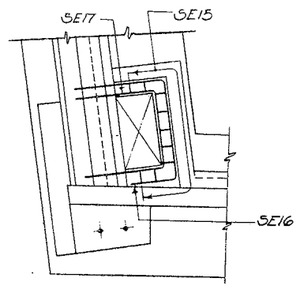

REINFORCEMENT AT TOP OF CATCH BASIN

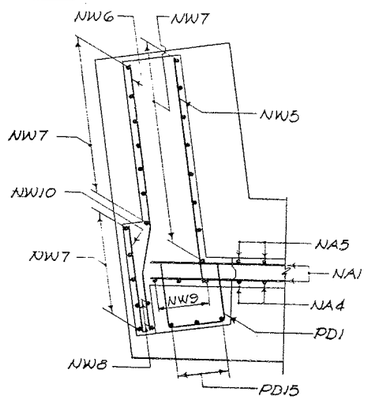

SECTION 2-2

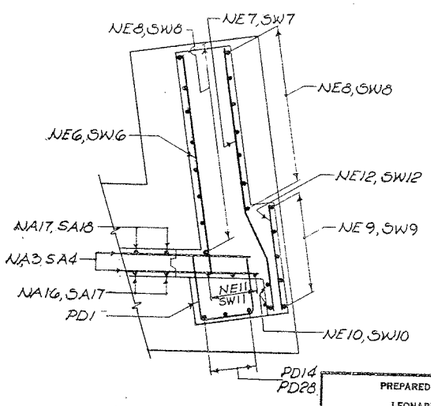

SECTIONS 3-3 & 4-4

PREPARED AND RECOMMENDED BY LEONARD S. WEGMAN CO.
BY Herbert Wegman
N.Y.S. P.E. LIC. 23287 DATE 12-9-63

F.A.I. 81 OVER EAST CALTHROP AVENUE
ABUTMENT REINFORCEMENT DETAILS II

DRAWN BY: BB	CHECKED BY: WNL	LEONARD S. WEGMAN CO. ENGINEERS	SCALE NO SCALE
REVIEWED BY:	DATE		

F.I.C. 64-7

FED. RD. REG. NO.	STATE	FEDERAL AID PROJECT NO.	SHEET NO.	T SH
1	NEW YORK	I-81-2(80)	210	2

INTERSTATE ROUTE 505
SYRACUSE CITY LINE TO SIZER STREE

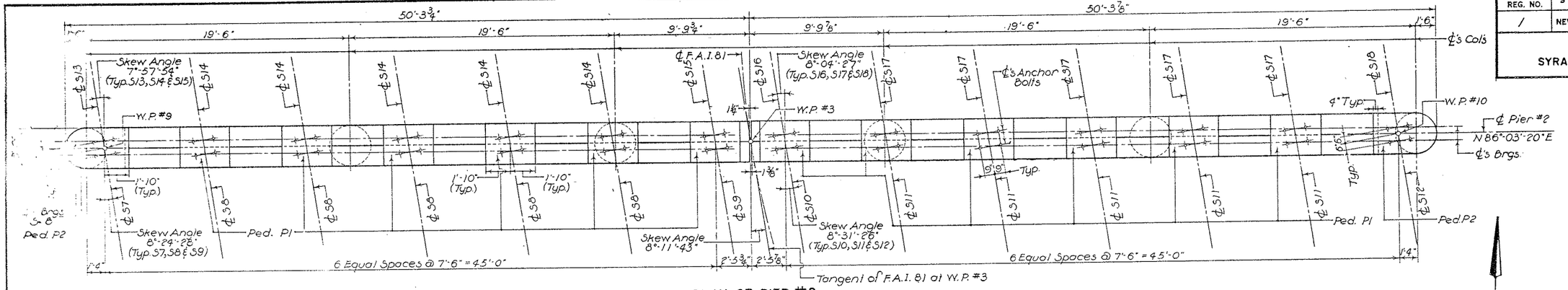

PLAN OF PIER #2

SCALE: 1/4" = 1'-0"

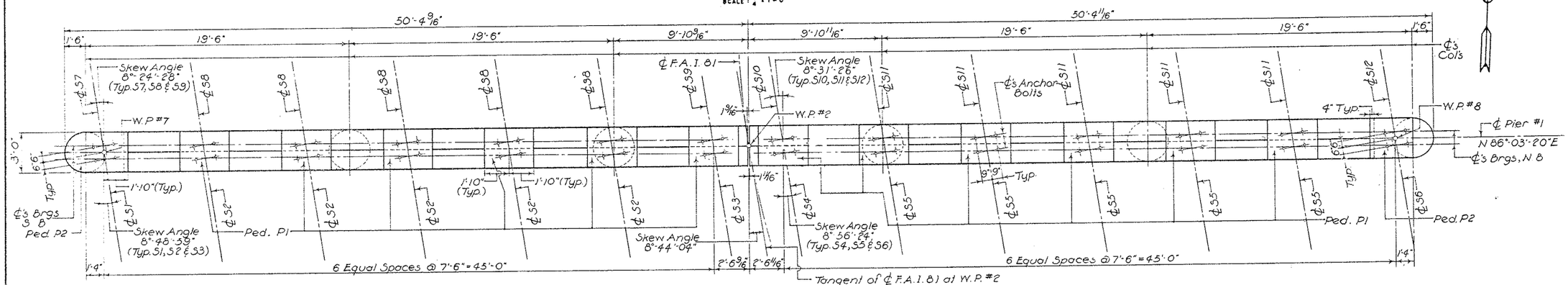

PLAN OF PIER #1

SCALE: 1/4" = 1'-0"

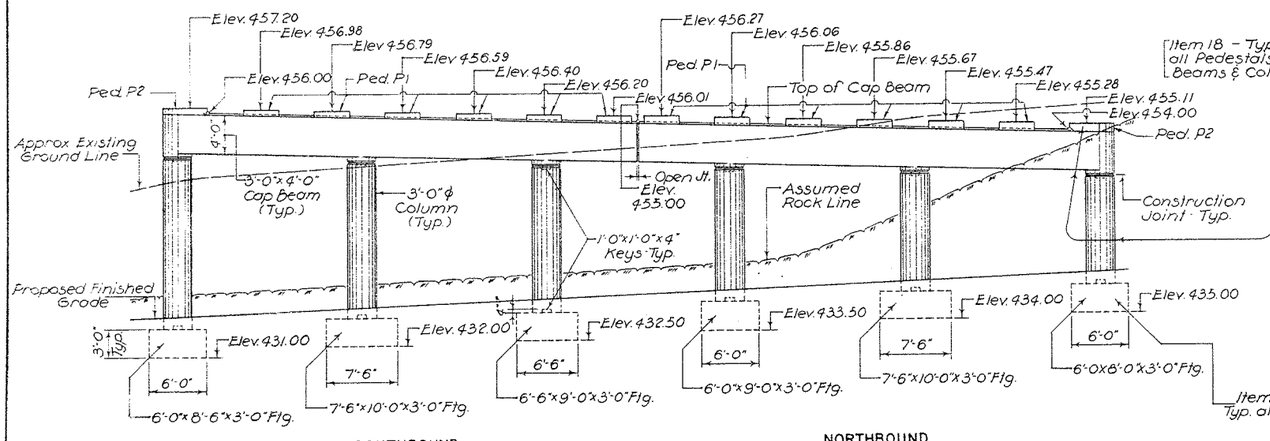

ELEVATION OF PIER #2

SCALE 1/8" = 1'-0"

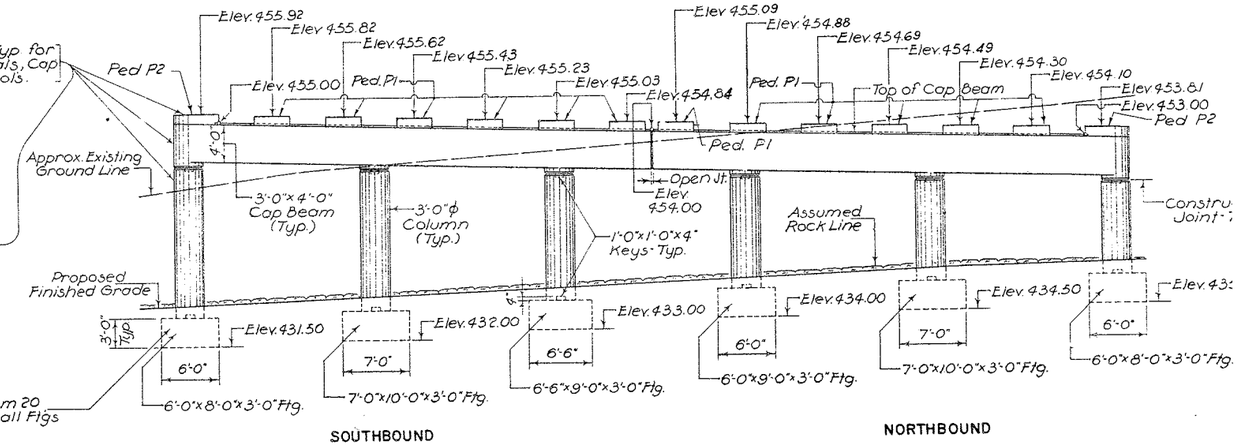

ELEVATION OF PIER #1

SCALE: 1/8" = 1'-0"

NOTE:
ALL DISINTEGRATED OR SHATTERED MATERIAL SHALL BE REMOVED TO LINES AND LEVELS ORDERED BY THE ENGINEER. WHERE SOUND ROCK IS FOUND BELOW THE PLANNED LEVELS OF THE BOTTOM OF FOOTINGS BACKFILL OF CLASS B CONCRETE SHALL BE INSTALLED TO THE LEVELS SHOWN ON PLANS. PAYMENT FOR THIS ADDITIONAL CONCRETE WILL BE MADE AT THE UNIT PRICE BID FOR CLASS B CONCRETE. ROCK REMOVED BELOW THE LEVELS DIRECTED BY THE ENGINEER AND OUTSIDE THE NEAT LINES MUST BE REPLACED BY BACKFILL OF CLASS B CONCRETE FOR WHICH NO PAYMENT WILL BE MADE

NOTES:
1. SEE DWG. NO. F-5 FOR SUBSTRUCTURE NOTES.
2. FOR ADDITIONAL PAYMENT ITEMS AND LIMITS SEE DWG. NOS. F-2 & F-4.
3. SEE DWG. NO. F-13 FOR BEARING PEDESTAL DETAILS
4. PED. = PEDESTAL.

F.A.I. 81 OVER EAST CALTHROP AVENUE
PIERS

PREPARED AND RECOMMENDED BY
LEONARD S. WEGMAN CO.
BY _____
N.Y.S. P.E. LIC. 23287 DATE 12-9-63

DRAWN BY:	CHECKED BY:	LEONARD S. WEGMAN CO. ENGINEERS	SCALE AS NOTE
HL	WNL	235 EAST 45th STREET, NEW YORK 17, N.Y.	DWG. NO.
REVIEWED BY:	DATE		
	12-9-63		

F.I.C. 64-7

FED. RD. REG. NO.	STATE	FEDERAL AID PROJECT NO.	SHEET NO.
1	NEW YORK	I-81-2(80)	211

INTERSTATE ROUTE 505
SYRACUSE CITY LINE TO SIZER S

NOTES:
1. ALL BAR REINFORCING SHOWN ON THIS DRAWI PAID FOR UN DER ITEM 28.
2. WORK THIS DRAWING WITH DWG. NOS. F-11 & F
3. FOR BEARING PEDESTAL DETAILS SEE DWG. N
4. UNLESS OTHERWISE NOTED ALL REINFORCING DIMENSIONS SHOWN ON THIS DRAWING APPLY T PIER #1 AND PIER #2.

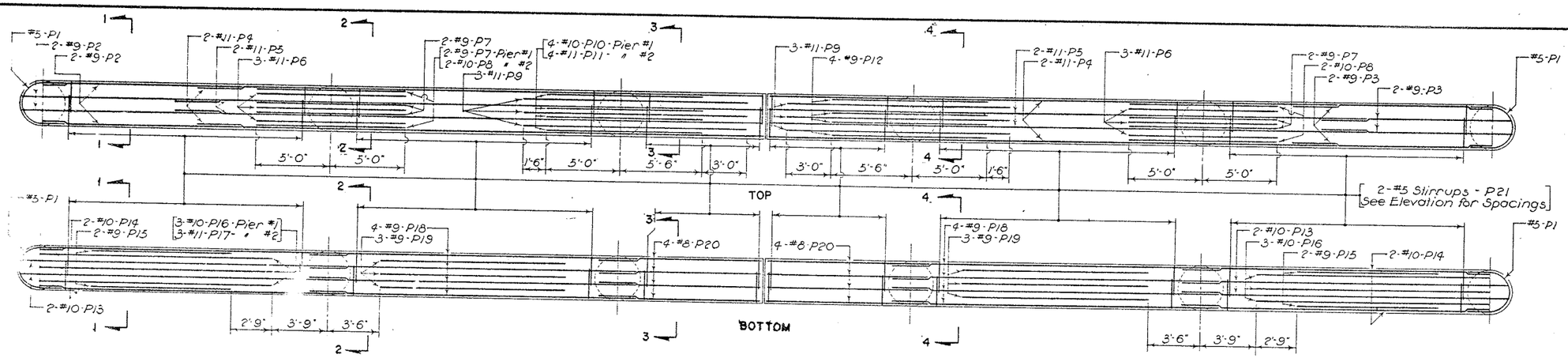

S.B.

PLAN OF BEAM REINFORCEMENT

SCALE: $\frac{1}{4}$" = 1'-0"

N.B.

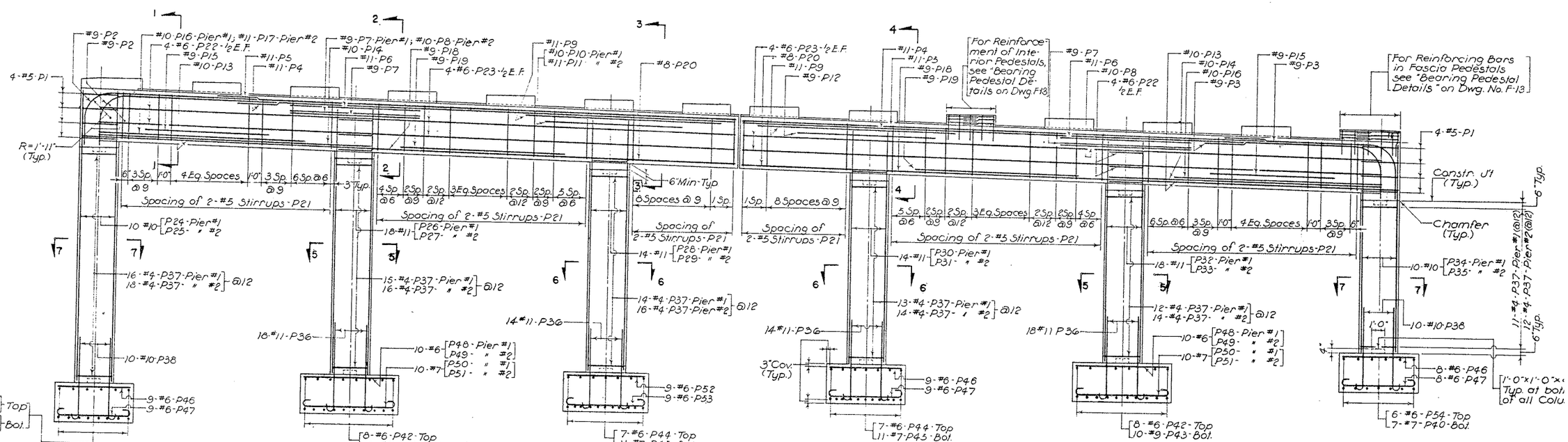

ELEVATION

SCALE: $\frac{1}{4}$" = 1'-0"

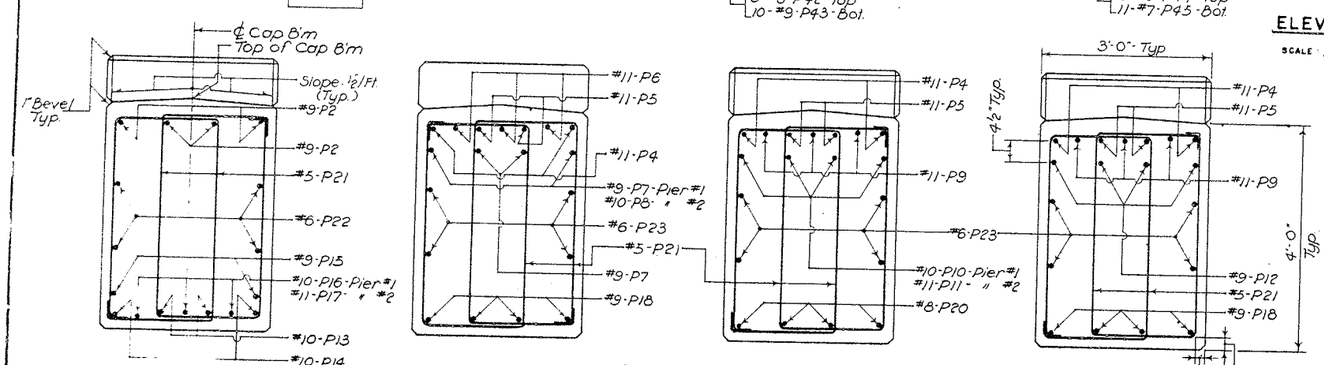

SECTION 1-1
SCALE: $\frac{3}{4}$" = 1'-0"

SECTION 2-2
SCALE: $\frac{3}{4}$" = 1'-0"

SECTION 3-3
SCALE: $\frac{3}{4}$" = 1'-0"

SECTION 4-4
SCALE: $\frac{3}{4}$" = 1'-0"

SECTION 5-5
SCALE: $\frac{3}{4}$" = 1'-0"

SECTION 6-6
SCALE: $\frac{3}{4}$" = 1'-0"

SECTION 7-7
SCALE: $\frac{3}{4}$" = 1'-0"

F.A.I. 81 OVER EAST CALTHROP AVENUE

REINFORCEMENT DETAILS FOR PIERS

PREPARED AND RECOMMENDED BY LEONARD S. WEGMAN CO.
BY Herbert Leonard Wegman
N.Y.S.P.E. LIC. 23287 DATE 12-9-63

DRAWN BY:	CHECKED BY:	LEONARD S. WEGMAN CO. ENGINEERS 235 EAST 45TH STREET, NEW YORK 17, N.Y.	SCALE 48 NO
HL	WNL		
REVIEWED BY:	DATE		DWG. NO.
Leonard Wegman	12-9-63		

10213.29

F.I.C. 64-7

FED. RD. REG. NO.	STATE	FEDERAL AID PROJECT NO.	SHEE NO
1	NEW YORK	I-81-2(80)	21

INTERSTATE ROUTE 505
SYRACUSE CITY LINE TO SIZER S

BAR SCHEDULE FOR PIERS

MARK	SIZE	NO. REQ'D PIER 1S	PIER 2S	PIER 1N	PIER 2N	LENGTH	TYPE	A	B	C	D	E	G	H	R	LOCATION
P 1	#5	4	4	4	4	7'-2"	5		1'-5"	4'-2"	1'-6"				1'-4"	3
P 2	#9	2	2	2	2	16'-10"	9		2'-3"	3'-0"	11'-7"			0'-3"	1'-11"	3
P 3	#9	2	2	2	2	16'-10"	6		2'-3"	3'-0"	11'-7"			0'-3"	1'-11"	3
P 4	#11	2	2	2	2	38'-0"	STR									3
P 5	#11	2	2	2	2	39'-6"	STR									3
P 6	#11	3	3	3	3	10'-0"	STR									3
P 7	#5	4	2	2	2	10'-0"	STR									3
P 8	#10	2	2		2	10'-0"	STR									3
P 9	#11	3	3	3	3	15'-0"	STR									3
P 10	#10	4				10'-6"	STR									3
P 11	#11		4			10'-6"	STR									3
P 12	#5			4	4	10'-6"	STR									3
P 13	#10	2	2	2	2	22'-3"	STR									3
P 14	#10	2	2	2	2	21'-0"	STR									3
P 15	#9	2	2	2	2	9'-6"	STR									3
P 16	#10	3		3	3	15'-9"	STR									3
P 17	#11		3			15'-9"	STR									3
P 18	#9	4	4	4	4	22'-3"	STR									3
P 19	#9	3	3	3	3	12'-6"	STR									3
P 20	#8	4	4	4	4	11'-0"	STR									3
P 21	#5	51	51	51	51	11'-3"	7	0'-7"	1'-10"	3'-8"	1'-10"	3'-8"				3
P 22	#6	4	4	4	4	21'-0"	STR									3
P 23	#6	4	4	4	4	30'-6"	STR									3
P 24	#10	10				20'-0"	STR									2
P 25	#10		10			21'-6"	STR									2
P 26	#11	18				19'-0"	STR									2
P 27	#11		18			20'-0"	STR									2
P 28	#11	14				17'-6"	STR									2
P 29	#11		14			19'-0"	STR									2
P 30	#11			14		17'-3"	STR									2
P 31	#11				14	17'-9"	STR									2
P 32	#11			16		15'-3"	STR									2
P 33	#11				16	16'-9"	STR									2
P 34	#1			10		14'-4"	STR									2
P 35	#1				10	15'-7"	STR									2
P 36	#11	32	32	32	32	7'-11"	1	1'-7"	6'-4"							1.2
P 37	#4	45	49	36	39	9'-9"	8	0'-6"		8'-9"				0'-6"	1'-4"	2
P 38	#10	10	10	10	10	7'-5"	1	1'-5"	6'-0"							1.2
P 39	#6		6			8'-0"	STR									1
P 40	#7	8		7	7	9'-2"	1	0'-10"	7'-6"					0'-10"		1
P 41	#7		8			9'-8"	1	0'-10"	8'-0"					0'-10"		1
P 42	#6	8	8	8	8	9'-6"	STR									1
P 43	#9	10	10	10	10	12'-0"	1	1'-3"	9'-6"					1'-3"		1
P 44	#6	7	8	7	7	8'-6"	STR									1
P 45	#7	11	11	11	11	10'-2"	1	0'-10"	8'-6"					0'-10"		1
P 46	#6	9	9	17	17	5'-6"	STR							0'-8"		1
P 47	#6	9	9	17	17	6'-10"	1	0'-8"	5'-6"							1
P 48	#6	10		10		6'-6"	STR									1
P 49	#6		10		10	7'-0"	STR									1
P 50	#7	10		10		8'-2"	1	0'-10"	6'-6"					0'-10"		1
P 51	#7		10		10	8'-8"	1	0'-10"	7'-0"					0'-10"		1
P 52	#6	9	9			6'-0"	STR									1
P 53	#6	9	9			7'-4"	1	0'-8"	6'-0"					0'-8"		1
P 54	#6	6		6	6	7'-6"	STR									1
BP 1	#6	3	3	3	3	8'-8"	5		2'-3"	4'-2"	2'-3"				1'-4"	4
BP 2	#6	39	39	39	39	7'-8"	2		2'-7"	2'-8"	2'-7"					4
BP 3	#5	71	71	71	71	3'-2"	1	0'-7"	2'-7"							4

Abbreviations:
Pier 1S - Pier #1 Southbound
Pier 1N - Pier #1 Northbound
Pier 2S - Pier #2 Southbound
Pier 2N - Pier #2 Northbound

LOCATION
1 FOOTING
2 COLUMN
3 CAP BEAM
4 BEARING PEDESTAL

NOTES:
1. ALL BAR REINFORCEMENT SHOWN ON THIS DRAWING WILL BE PAID FOR UNDER ITEM 28.
2. WORK THIS DRAWING WITH DWG. NO. F-12.

TYPICAL 180° HOOK DETAIL

BAR SCHEDULE NOTES
1. All Dimensions in the Bar Schedule are out toout of Bar
2. Dimensions Omitted in Bar Schedule are Zero

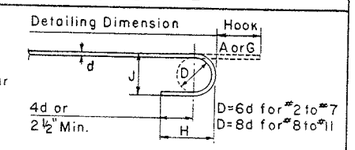

BAR SIZE	DIA. INCH	J	APPROX. H	BAR SIZE	DIA. INCH	J	APPROX. H
# 4	0.500	4"	4 ½"	# 8	1.000	10"	9"
# 5	0.625	5"	5"	# 9	1.128	11¼"	10¼"
# 6	0.750	6"	6"	# 10	1.270	1'-0½"	11¼"
# 7	0.875	7"	7"	# 11	1.410	1'-2"	1'-0¾"

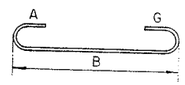

TYPE 1

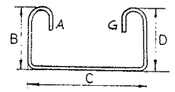

TYPE 2

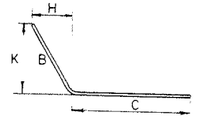

TYPE 3

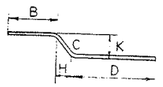

TYPE 4

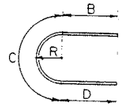

TYPE 5

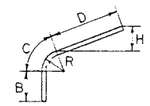

TYPE 6

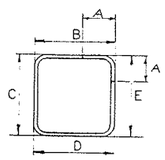

TYPE 7

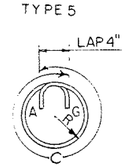

TYPE 8

TYPE 9

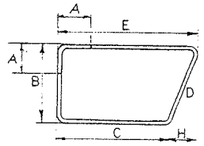

TYPE 11

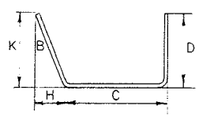

TYPE 12

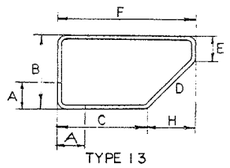

TYPE 13

REINFORCEMENT BENDING DIAGRAMS

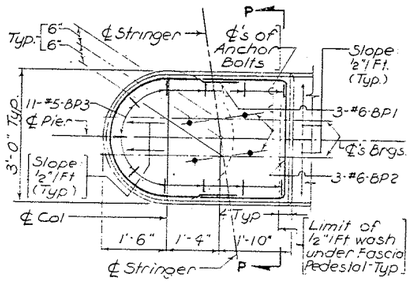

PED.-P2*

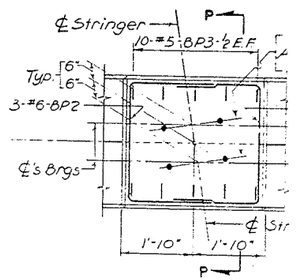

PED.-P1*

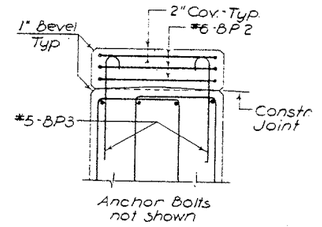

SECTION P-P

* See Elevation of Pier #1 & Pier #2 on Dwg. No. F-12 for Location.

BEARING PEDESTAL DETAILS

PREPARED AND RECOMMENDED BY
LEONARD S. WEGMAN CO.
BY _____
N.Y.S. P.E. LIC. 23287 DATE 12-9-63

F.A.I. 81 OVER EAST CALTHROP AVENUE
REINFORCEMENT BENDING DIAGRAMS
AND SUBSTRUCTURE BAR SCHEDULE I

DRAWN BY: HL JC	CHECKED BY: WNL & R	LEONARD S. WEGMAN CO. ENGINEERS	SCALE NO SC
REVIEWED BY:	DATE 12-9-63		DWG. NO

BERLYN CRANE INC., BROOKLYN 17, N.Y. REPRODUCTION NO. 4008

1031529

F.I.C. 64-7

FED. RD. REG. NO.	STATE	FEDERAL AID PROJECT NO.	SHEET NO.
1	NEW YORK	I-81-2(80)	213

INTERSTATE ROUTE 505
SYRACUSE CITY LINE TO SIZER STR

SOUTH ABUTMENT BAR SCHEDULE

MARK	SIZE	NO. REQ'D NB	NO. REQ'D SB	LENGTH	TYPE	A	B	C	D	G	H	K	LOCATION
[illegible]	#5	12		7'-9"	STR								1
[illegible]	#5	12	10	15'-3"	STR								1
F 3	#5	6	6	23'-0"	STR								1
F 4	#5	6	6	23'-6"	STR								1
[illegible] 5	#5	4	4	4'-0"	STR								1
[illegible] 6	#5	58	58	7'-0"	STR								1
[illegible] 7	#5	12		30'-0"	STR								1
[illegible]	[illegible]		6	6'-4"	3		0'-4"	6'-0"			0'-4"	0'-2"	1
[illegible]	#5		6	33'-0"	2		3'-1"	30'-0"					1
[illegible]	#5		6	27'-3"	STR								1
[illegible]	#5		12	5'-7"	STR								1
SA 1	#5	5		25'-3"	STR								2
SA 2	#5	5		21'-10"	STR								2
SA 3	#5	12	12	25'-0"	STR								2
SA 4	#5		10	25'-9"	STR								1,2
SA 5	#5	10		5'-0"	STR								1,2
SA 6	#5	10		7'-6"	STR								1,2
SA 7	#5	10		8'-3"	STR								1,2
SA 8	#5	10		7'-9"	STR								1,2
SA 9	#5	10		8'-7"	STR								1,2
SA 10	#5	10		8'-1"	STR								1,2
SA 11	#5		8	6'-10"	STR								1,2
SA 12	#5		8	6'-4"	STR								1,2
SA 13	#5		8	7'-2"	STR								1,2
SA 14	#5		8	6'-8"	STR								1,2
SA 15	#5		8	7'-5"	STR								1,2
SA 16	#5		8	6'-11"	STR								1,2
SA 17	#5		7	7'-9"	STR								1,2
SA 18	#5		7	7'-2"	STR								4
PD 1	#5	38	35	9'-6"	2		3'-6"	3'-2"	3'-0"				1,2
PD 2	#5	3		6'-5"	STR								4
PD 3	#5	3		6'-10"	STR								4
PD 4	#5	3		7'-0"	STR								4
PD 5	#5	3		7'-2"	STR								4
PD 6	#5	3		7'-5"	STR								4
PD 7	#5	3		7'-7"	STR								4
PD 8	#5	3		7'-9"	STR								4
PD 9	#5		3	5'-7"	STR								4
PD 10	#5		3	5'-10"	STR								4
PD 11	#5		3	6'-0"	STR								4
PD 12	#5		3	6'-2"	STR								4
PD 13	#5		3	6'-4"	STR								4
PD 14	#5		6	6'-6"	STR								4
SW 1	#5		7	11'-0"	STR								3
SW 2	#5		12	6'-4"	2	0'-7"	2'-4"	0'-8"	2'-4"	0'-7"			3
SW 3	#5		8	6'-4"	2		2'-3"	2'-0"	2'-3"				3
SW 4	#5		2	9'-6"	STR								3
SW 5	#5		1	10'-9"	STR								3
SW 6	#5		5	11'-6"	STR								3
SW 7	#5		7	14'-1"	4		8'-6"	2'-7"	3'-0"		2'-6"	0'-9"	3
SW 8	#5		15	8'-11"	STR								1,3
SW 9	#5		5	9'-3"	STR								1,3
SW 10	#5		2	9'-2"	STR								3
SW 11	#5		3	8'-0"	STR								3
SW 12	#5		7	5'-6"	STR								3
SW 13	#5		3	7'-6"	2		2'-3"	3'-2"	2'-3"				3
SW 14	#6		2	4'-2"	2		1'-10"	0'-8"	1'-10"				3
SE 1	#5	8		10'-6"	STR								3
SE 2	#5	11		6'-4"	2	0'-7"	2'-4"	0'-8"	2'-4"	0'-7"			3
SE 3	#5	7		6'-4"	2		2'-3"	2'-0"	2'-3"				3
SE 4	#5	2		9'-0"	STR								3
SE 5	#5	5		11'-9"	STR								3
SE 6	#5	7		14'-2"	4		8'-6"	2'-2"	3'-6"		2'-0"	0'-9"	3
SE 7	#5	15		9'-1"	STR								1,3
SE 8	#5	5		9'-4"	STR								1,3
SE 9	#5	7		5'-6"	STR								3
SE 10	#5	2		9'-4"	STR								3
SE 11	#5	4		7'-11"	STR								1,3
SE 12	#5	11		7'-11"	STR								1,5
SE 13	#6	2		4'-2"	2		1'-10"	0'-8"	1'-10"				3
SE 14	#5	3		7'-6"	2		2'-3"	3'-2"	2'-3"				3
SE 15	#5	9		4'-9"	2		2'-3"	0'-5"	2'-3"				5
SE 16	#5	1		10'-10"	2		3'-9"	5'-0"	2'-3"				5
SE 17	#5	1		10'-4"	2		3'-0"	4'-6"	3'-0"				5
SE 18	#5	5		11'-4"	12		1'-3"	5'-9"	4'-5"		1'-3"	0'-3"	5
SE 19	#5	5		10'-4"	2		3'-3"	4'-0"	3'-3"				1,5

NORTH ABUTMENT BAR SCHEDULE

MARK	SIZE	NO. REQ'D NB	NO. REQ'D SB	LENGTH	TYPE	A	B	C	D	G	H	K	LOCATION
F 21	#5	10		7'-6"	STR								1
F 22	#5	12		15'-9"	STR								1
F 23	#5	8	10	25'-3"	STR								1
F 24	#5	8	8	25'-9"	STR								1
F 25	#5	4	4	4'-0"	STR								1
F 26	#5	72		9'-6"	STR								1
F 27	#5	8		26'-6"	STR								1
F 28	#5	8		7'-10"	3		0'-4"	7'-6"			0'-4"	0'-2"	1
F 29	#5	8		31'-5"	2		3'-6"	28'-0"					1
F 30	#5		18	28'-6"	STR								1
NA 1	#5		16	26'-3"	STR								2
NA 2	#5	12	16	25'-0"	STR								2
NA 3	#5	12		25'-9"	STR								2
NA 4	#5		7	12'-8"	STR								1,2
NA 5	#5		7	12'-2"	STR								1,2
NA 6	#5		8	12'-5"	STR								1,2
NA 7	#5		8	11'-11"	STR								1,2
NA 8	#5		8	12'-2"	STR								1,2
NA 9	#5		8	11'-8"	STR								1,2
NA 10	#5		8	11'-10"	STR								1,2
NA 11	#5		8	11'-4"	STR								1,2
NA 12	#5	10		8'-11"	STR								1,2
NA 13	#5	10		8'-5"	STR								1,2
NA 14	#5	10		8'-8"	STR								1,2
NA 15	#5	10		8'-2"	STR								1,2
NA 16	#5	11		8'-4"	STR								1,2
NA 17	#5	11		7'-10"	STR								1,2
PD 1	#5	38	56	9'-6"	2		3'-6"	3'-2"	3'-0"				4
PD 15	#5		3	11'-2"	STR								4
PD 16	#5		3	10'-11"	STR								4
PD 17	#5		3	10'-9"	STR								4
PD 18	#5		3	10'-6"	STR								4
PD 19	#5		3	10'-4"	STR								4
PD 20	#5		3	10'-2"	STR								4
PD 21	#5		3	9'-11"	STR								4
PD 22	#5	3		7'-9"	STR								4
PD 23	#5	3		7'-6"	STR								4
PD 24	#5	3		7'-4"	STR								4
PD 25	#5	3		7'-2"	STR								4
PD 26	#5	3		5'-11"	STR								4
PD 27	#5	3		6'-9"	STR								4
PD 28	#5	3		6'-7"	STR								4
NW 1	#5		8	10'-6"	STR								3
NW 2	#5		11	6'-4"	2	0'-7"	2'-4"	0'-8"	2'-4"	0'-7"			3
NW 3	#5		7	6'-4"	2		2'-3"	2'-0"	2'-3"				3
NW 4	#5		2	9'-0"	STR								3
NW 5	#5		8	11'-9"	STR								3
NW 6	#5		10	14'-2"	4		8'-6"	2'-2"	3'-6"		2'-0"	0'-9"	3
NW 7	#5		20	14'-3"	STR								1,3
NW 8	#5		2	14'-3"	STR								3
NW 9	#5		3	12'-11"	STR								3
NW 10	#5		10	5'-6"	STR								3
NW 11	#6		2	4'-2"	2		1'-10"	0'-8"	1'-10"				3
NW 12	#5		3	7'-6"	2		2'-3"	3'-2"	2'-3"				3
NE 1	#5	7		11'-0"	STR								3
NE 2	#5	12		6'-4"	2	0'-7"	2'-4"	0'-8"	2'-4"	0'-7"			3
NE 3	#5	8		6'-4"	2		2'-3"	2'-0"	2'-3"				3
NE 4	#5	2		9'-6"	STR								3
NE 5	#5	1		10'-9"	STR								3
NE 6	#5	5		11'-6"	STR								3
NE 7	#5	7		14'-1"	4		8'-6"	2'-7"	3'-0"		2'-6"	0'-9"	3
NE 8	#5	15		9'-6"	STR								1,3
NE 9	#5	5		9'-7"	STR								1,3
NE 10	#5	2		9'-7"	STR								3
NE 11	#5	3		8'-3"	STR								3
NE 12	#5	7		5'-6"	STR								3
NE 13	#5	3		7'-6"	2		2'-3"	3'-2"	2'-3				3
NE 14	#6	2		4'-2"	2		1'-10"	0'-8"	1'-10"				3
F 31	#5		3	9'-6"	STR								—
F 32	#6		10	9'-6"	STR								1
F 33	#5		16	17'-0"	STR								1
F 34	#5		43	11'-6"	STR								1
F 35	#6		57	11'-6"	STR								1

NOTES:
1. ALL BAR REINFORCEMENT SHOWN ON THIS DRAWING WILL BE PAID FOR UNDER ITEM 28.
2. WORK THIS DRAWING WITH DWG. NOS. F-9 & F-10.
3. FOR REINFORCEMENT BENDING DIAGRAMS SEE DWG. NO. F-13.

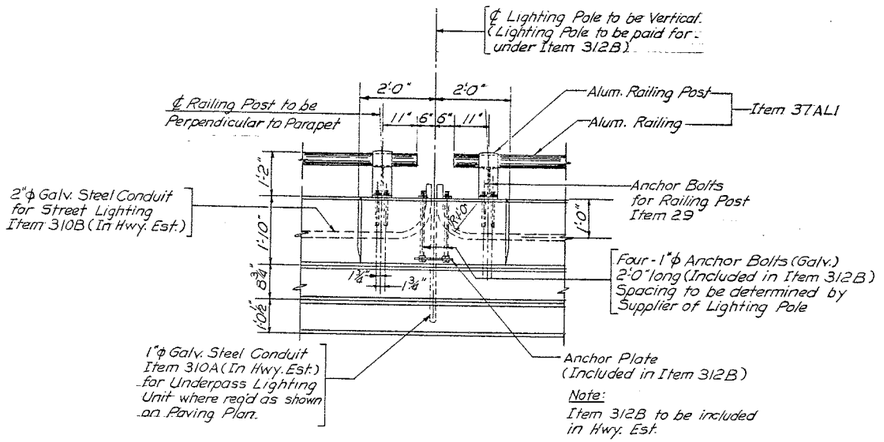

ELEVATION
SCALE: 1"=1'-0"

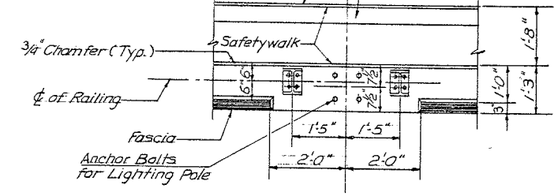

PLAN
SCALE: ½"=1'-0"

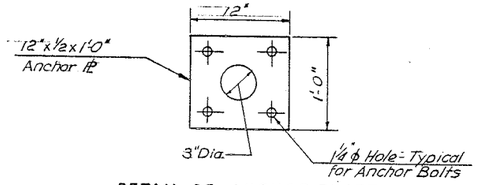

DETAIL OF ANCHOR PLATE
N.T.S.

LIGHTING POLE BASE ANCHORAGE DETAIL

LOCATION
1. FOOTING
2. STEM (ABUT.)
3. STEM (WING WALL)
4. BEARING PEDESTAL
5. CATCH BASIN

PREPARED AND RECOMMENDED BY
LEONARD S. WEGMAN CO.
BY [signature]

F.A.I. 81 OVER EAST CALTHROP AVENUE
SUBSTRUCTURE BAR SCHEDULE II

DRAWN BY: HG	CHECKED BY: WNL	LEONARD S. WEGMAN CO. ENGINEERS	SCALE AS NOTED
REVIEWED BY:	DATE		

F.I.C. 64-7

FED. RD. REG. NO.	STATE	FEDERAL AID PROJECT NO.	SHEET NO.	TOTAL SHEETS
1	NEW YORK	I-81-2(80)	214	289

INTERSTATE ROUTE 505
SYRACUSE CITY LINE TO SIZER STREET

I81 SB

curb reveal both sides ± 8¼" See D 250712 & D 500578 for mono-Deck Rehab.

I-81 NB

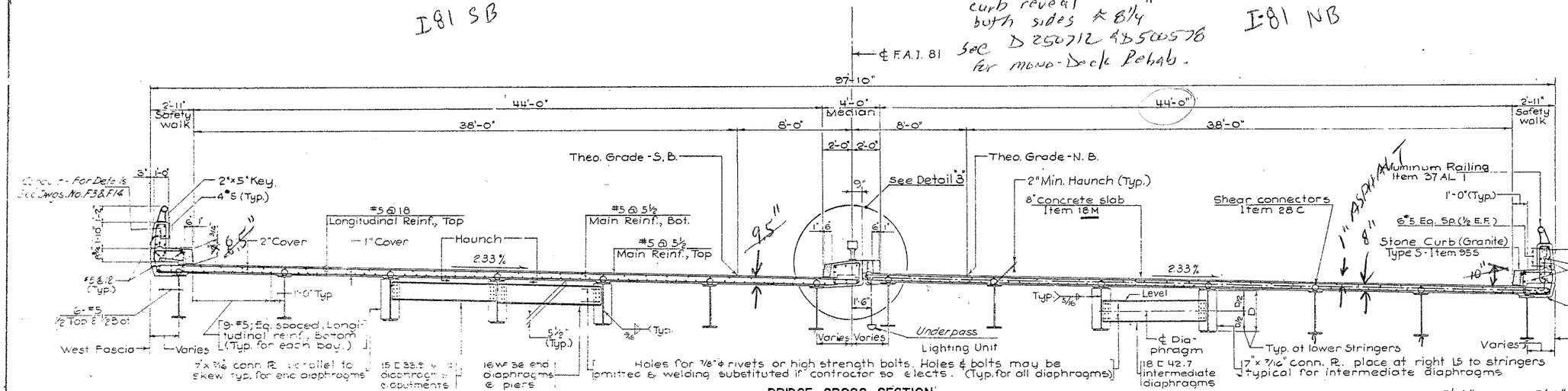

BRIDGE CROSS SECTION
SCALE: ¼" = 1'-0"

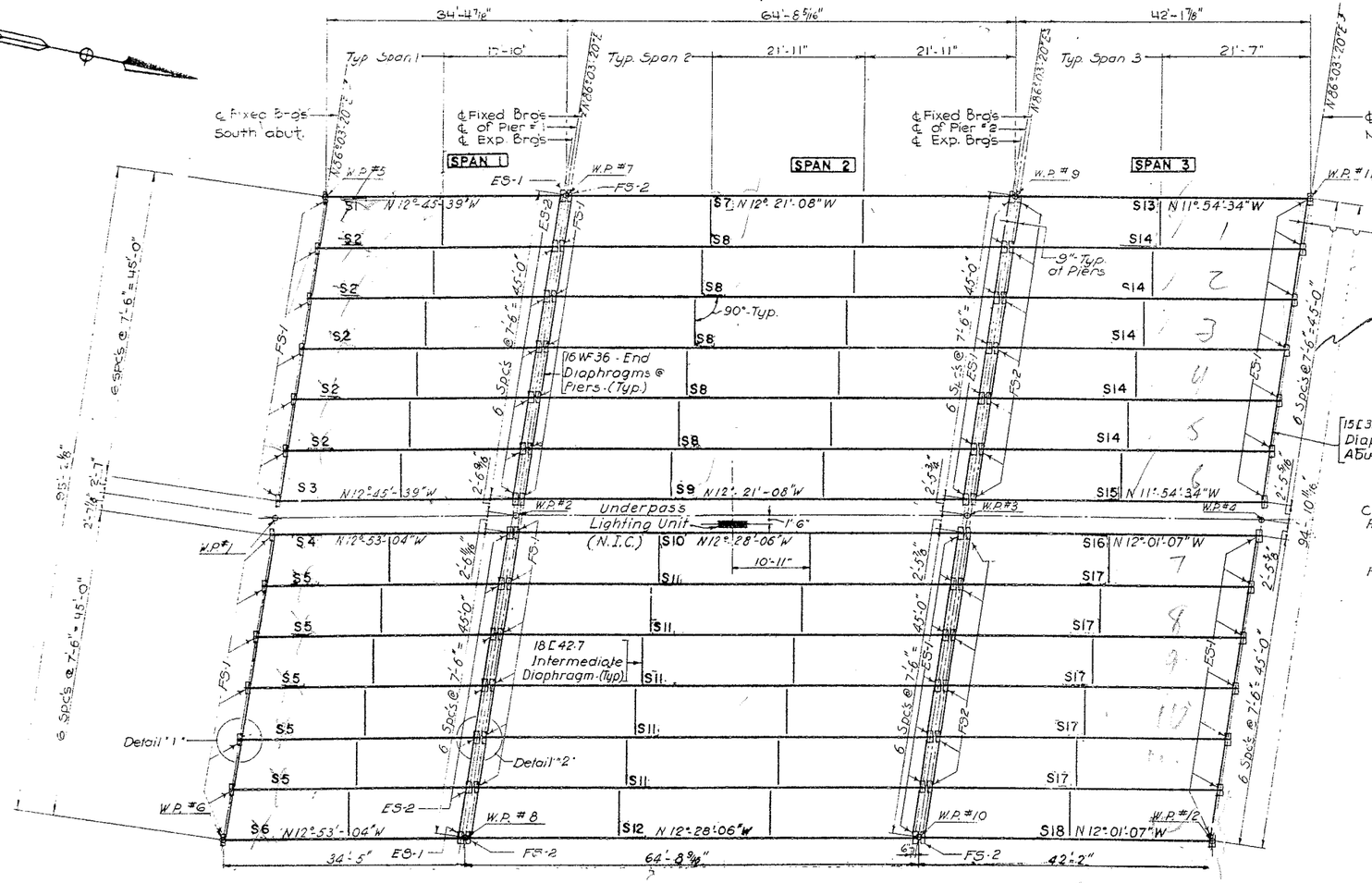

FRAMING PLAN
SCALE: 1" = 10'

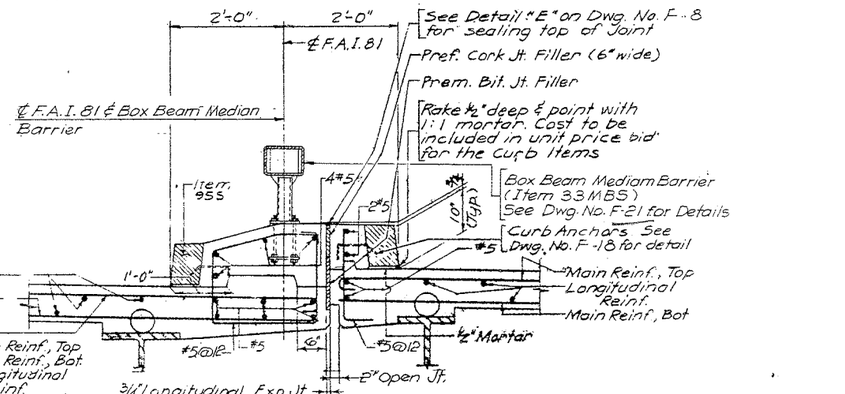

DETAIL "3"

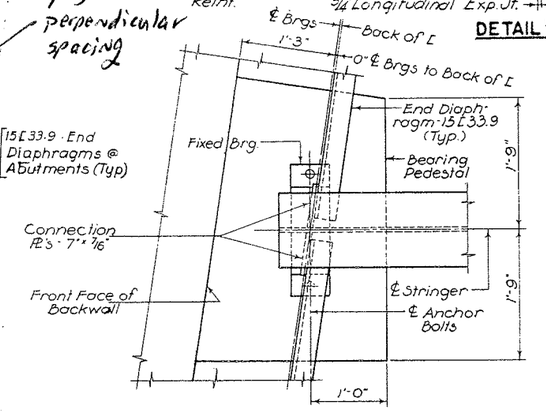

DETAIL "1"
SCALE: 1" = 1'-0"

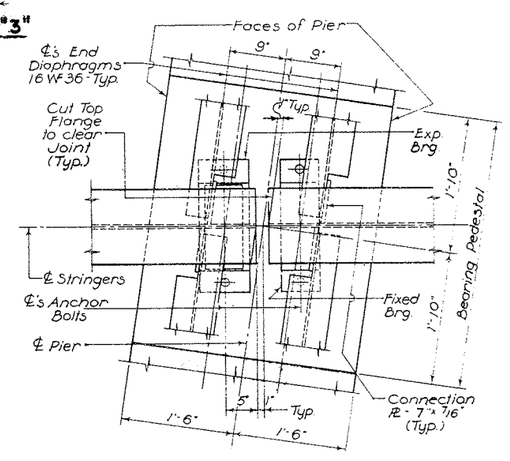

DETAIL "2"
SCALE: 1" = 1'-0"

PREPARED AND RECOMMENDED BY LEONARD S. WEGMAN CO.
BY Herbert Leonard
N.Y.S. P.E. LIC. 23287 DATE 12-9-63

F.A.I. 81 OVER EAST CALTHROP AVENUE
BRIDGE CROSS SECTION AND FRAMING PLAN

DRAWN BY:	CHECKED BY:	LEONARD S. WEGMAN CO. ENGINEERS	SCALE AS NOTED
MB HL	JC & PL	235 EAST 45TH STREET, NEW YORK 17, N.Y.	DWG. NO. F-15
REVIEWED BY:	DATE		
Leonard Wegman	12-9-63		

F.I.C. 64-7

FED. RD. REG. NO.	STATE	FEDERAL AID PROJECT NO.	SHEET NO.	T S
1	NEW YORK	I-81-2(81)	215	2

INTERSTATE ROUTE 505
SYRACUSE CITY LINE TO SIZER STREET

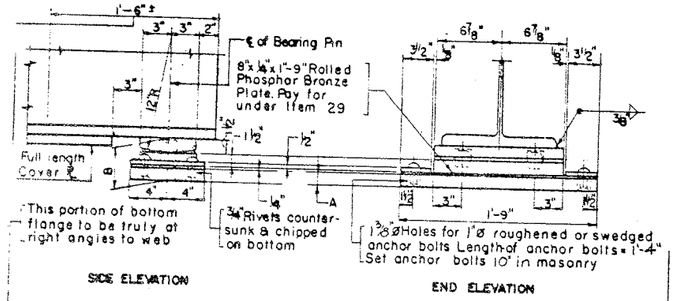

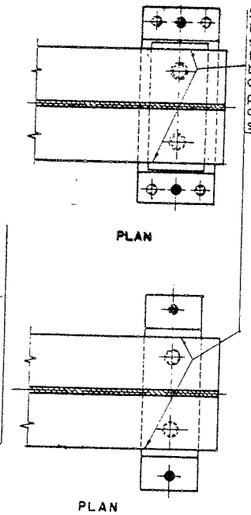

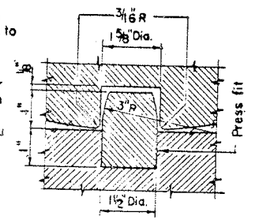

DETAIL OF DOWEL

DIMENSIONS A & B					
BEARING MARK	A	B	BEARING MARK	A	B
FS-1	1½"	3"	ES-1	1¼"	4½"
FS-2	3"	4½"	ES-2	2¾"	6"

BEARING DETAILS

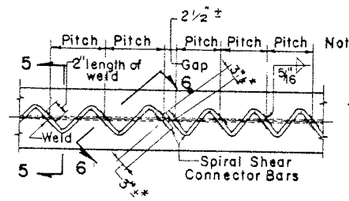

PARTIAL PLAN OF SPIRAL

Note: Do not paint surface of flanges on which welds are made

*: Spiral to extend 3"± beyond ℄ of web

Studs to be spaced at the same pitches shown for the pitch of the spirals

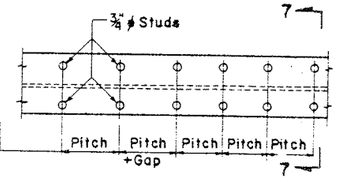

PARTIAL PLAN OF STUDS

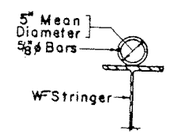

SECTION 5-5

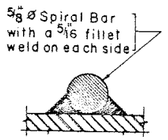

SECTION 6-6

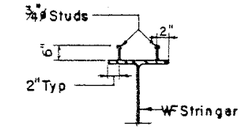

SECTION 7-7

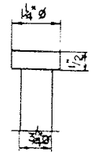

DETAIL OF STUD

Studs to be used if Contractor so elects.

DETAIL OF SHEAR CONNECTOR
(Item 28C)

NOTE:
UNLESS OTHERWISE NOTED ALL STEEL SHOWN ON THIS DRAWING WILL BE PAID FOR UNDER ITEM 29.

NOTES:
1. THE CONTRACTOR'S ATTENTION IS CALLED TO THE POSSIBILITY OF INTERFERENCE BETWEEN THE REINFORCING STEEL IN THE SLAB AND THE BEAM SPIRALS. TO AVOID THIS INTERFERENCE THE BAR SPACING MAY BE VARIED 1"± WITH THE UNDERSTANDING THAT THE REQUIRED AREA OF STEEL WILL BE PLACED IN EACH 5'-0". EVEN THEN SOME BARS MAY HAVE TO BE THREADED THROUGH ONE OR MORE SPIRALS.
2. SPECIAL PRECAUTIONS MUST BE EXERCISED WHERE WELDING CROSSES EDGE OF FLANGE TO AVOID ANY POSSIBILITY OF "UNDERCUT" OR NICKS IN EDGE OF FLANGE.

Ends of Stringers to be vertical under full dead load

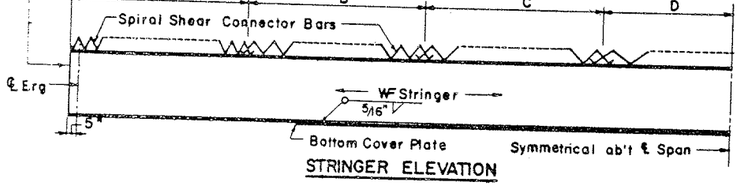

STRINGER ELEVATION

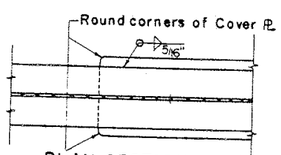

PLAN SECTION AT END OF COVER PLATE

SUPERSTRUCTURE NOTES:
1. ALL BEARINGS ARE TO BE FIELD WELDED TO BEAMS.
2. SAFETY WALK SHALL NOT BE SCORED.
3. ALL STRUCTURAL STEEL SHALL CONFORM TO THE REQUIREMENTS OF A. S. T. M. DESIGNATION A7 UNLESS OTHERWISE NOTED.
STEEL BASE METAL TO BE WELDED SHALL CONFORM TO THE REQUIREMENTS OF A. S. T. M. DESIGNATION A-373.
HIGH STRENGTH BOLTS, NUTS AND WASHERS SHALL CONFORM TO THE REQUIREMENTS OF A. S. T. M. DESIGNATION A-325.
ALL STRUCTURAL STEEL, REGARDLESS OF TYPE, WILL BE PAID FOR UNDER ITEM 29
STRUCTURAL STEEL, A. S. T. M. DESIGNATION A36-62T MAY BE USED AS A SUBSTITUTE FOR A7 OR A373 WHERE SUCH A36-62T STEEL IS TO BE WELDED, MINIMUM PREHEAT AND INTERPASS TEMPERATURES SHALL BE MAINTAINED FOR WELDING IN ACCORDANCE WITH THE FOLLOWING TABLES:

THICKNESS OF THICKEST PART AT POINT OF WELDING	MINIMUM PREHEAT AND INTERPASS TEMPERATURES
TO 1" INCL.	NONE*
OVER 1" TO 2" INCL.	50°F*
OVER 2"	150°F

*WHEN BASE METAL TEMPERATURES ARE BELOW 32°F PREHEAT BASE METAL TO AT LEAST 70°F AND MAINTAIN DURING WELDING.
WHERE SUCH A36-62T STEEL IS TO BE WELDED, LOW HYDROGEN TYPE ELECTRODES, CONFORMING TO A. W. S. - A. S. T. M. SPECIFICATION FOR MILD STEEL ARC WELDING ELECTRODES CLASSIFICATION E7015, E7016 & E7018, SHALL BE USED.
4. TO INSURE UNIFORM GRADES FOR THE SURFACE OF ROADWAY UNDER DEAD LOAD, AFTER ALL SUPERSTRUCTURE STEEL HAS BEEN ERECTED AND BRACED IN ITS FINAL POSITION, ELEVATION SHALL BE TAKEN ON THE TOP OF THE STEEL AT THE CENTER LINE OF WEB AT EACH CENTER LINE OF BEARING, CENTER OF THE SPAN AND AT OTHER LOCATIONS WHERE THEORETICAL BOTTOM OF THE SLAB ELEVATIONS ARE INDICATED ON THE PLANS.
THE DEPTH OF HAUNCH REQUIRED TO POSITION THE SLAB FORMS WILL BE EQUAL TO THE DIFFERENCE IN ELEVATION BETWEEN THE BOTTOM OF SLAB ELEVATIONS AND THE TOP OF STEEL ELEVATIONS PLUS THE DEFLECTION DUE TO SUPERIMPOSED DEAD LOAD.
5. IF THE CONTRACTOR ELECTS TO USE CORRUGATED METAL FORMS FOR THE STRUCTURAL SLAB, THE DETAILS OF THESE FORMS SHALL BE SUBMITTED TO THE DEPUTY CHIEF ENGINEER (BRIDGES) FOR APPROVAL, PRIOR TO THEIR USE. THE CONTRACTOR'S ATTENTION IS DIRECTED TO ADDITIONAL NOTES APPEARING IN THE PROPOSAL RELATIVE TO CORRUGATED METAL FORMS.
6. UNLESS OTHERWISE SHOWN, THE MINIMUM CONCRETE COVER FOR REINFORCING STEEL IN THE SUPERSTRUCTURE SHALL BE AS FOLLOWS:

BRIDGE SLAB - TOP OF SLAB	2"
BRIDGE SLAB - BOTTOM OF SLAB	1"
BRIDGE SLAB - EXTERIOR FACE	2-1/2"
EXTERIOR FACE OF PARAPET	2-3/4"
INTERIOR FACE OF PARAPET	2"

7. MAROON PRIMER, ITEM M18B, WILL NOT BE APPROVED FOR USE ON THIS CONTRACT.
8. FILLET WELDING ACROSS FLANGES WHICH CARRY TENSILE STRESSES SHALL ONLY BE PERFORMED WITH THE MINIMUM PREHEAT OF 200°F

STRINGER SCHEDULE												
STRINGER MARK	HORIZONTAL DISTANCE C. TO C. BEARINGS	NUMBER REQ'D	SIZE OF STRINGER	BOTTOM COVER PLATE SIZE OF WELD	BOTTOM COVER PLATE SIZE OF COVER PLATE	SPIRAL SHEAR CONNECTOR BARS (⅝"ø) A PITCH	B PITCH	C PITCH	D PITCH	CAMBER (Inches) (See Note "A") ①	②	③	④
S 1	33'-10⅞"	1	36WF135	—	—	Non-Composite				—	⅛	—	⅛
S 6	33'-11"	1											
S 2	33'-10⅞"	5	33WF118	—	—	do				—	¼	—	¼
S 5	33'-11"	5											
S 3	33'-10⅞"	1	33WF118	—	—	do				—	¼	—	¼
S 4	33'-11"	1											
S 7	63'-8⅝"	1	36WF135	5/16	16"×¾"×F.L.	8'-0" 6"	8'-1½" 6½"	8'-0" 8"	Bal. 9½"	¼	¼	—	1¼
S 12	63'-8⅜"	1											
S 8	63'-8⅜"	5	36WF150	do	16"×⅞"×47'-0"	7'-9½" 5½"	8'-1½" 6½"	8'-1½" 7½"	Bal. 9"	¼	⅛	—	1⅛
S 11	63'-8⅜"	5											
S 9	63'-8⅜"	1	36WF150	do	16"×⅞"×48'-0"	7'-9½" 5½"	8'-1½" 6½"	8'-1½" 7½"	Bal. 9"	¼	⅛	—	1⅛
S 10	63'-8⅜"	1	36WF135	do	16"×¾"×49'-0"	7'-11" 5"	8'-1½" 6½"	8'-1½" 7½"	Bal. 9"	¼	⅛	—	1⅛
S 13	41'-7⅞"	1	36WF135	—	—	Non-Composite				—	¼	—	¼
S 18	41'-8"	1											
S 14	41'-7⅞"	5	36WF150	—	—	do				—	¼	—	¼
S 17	41'-8"	5											
S 15	41'-7⅞"	1	36 WF 150	—	—	do				—	¼	—	¼
S 16	41'-8"	1	36 WF 135										

F.L. = Full Length
Bal. = Balance

NOTE "A"
① CAMBER DUE TO STEEL WEIGHT ALONE.
② TOTAL DEAD LOAD CAMBER (20 PSF FUTURE PAVING ALLOWANCE NOT INCLUDED).
③ VERTICAL CURVE ORDINATE.
④ TOTAL CAMBER = TOTAL DEAD LOAD CAMBER + VERTICAL CURVE ORDINATE.

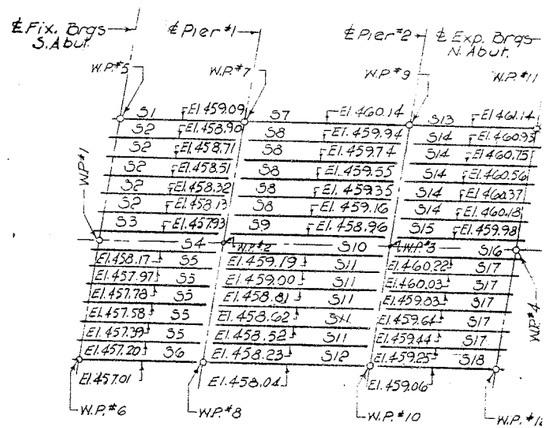

Note:
The Elevations are given at Stringer ℄'s at mid-Span.

THEORETICAL ELEVATIONS AT TOPS OF HAUNCHES AFTER STEEL ERECTION

Beam Dimensions

Size	Flange W	Flange Thk	Web Thk
36"x135#	12"	.790	.600 ✓
33"x118#	11½"	.740	.550 ✓
36"x150#	12"	.940	.625 ✓

PREPARED AND RECOMMENDED BY LEONARD S. WEGMAN CO.
BY Hubert Landolt
N.Y.S. P.E. LIC. 23287 DATE 12-9-63

F.A.I. 81 OVER EAST CALTHROP AVENUE
SUPERSTRUCTURE DETAILS

DRAWN BY:	CHECKED BY:	LEONARD S. WEGMAN CO. ENGINEERS 235 EAST 45TH STREET, NEW YORK 17, N. Y.	SCALE NO SCALE
BE BB	JC PP		
REVIEWED BY: Lew Hewitt	DATE 12-9-63		DWG. NO. F-16

F.I.C. 64-7

FED. RD. REG. NO.	STATE	FEDERAL AID PROJECT NO.	SHEET NO.
1	NEW YORK	I-81-2(80)	216

INTERSTATE ROUTE 505
SYRACUSE CITY LINE TO SIZER STR

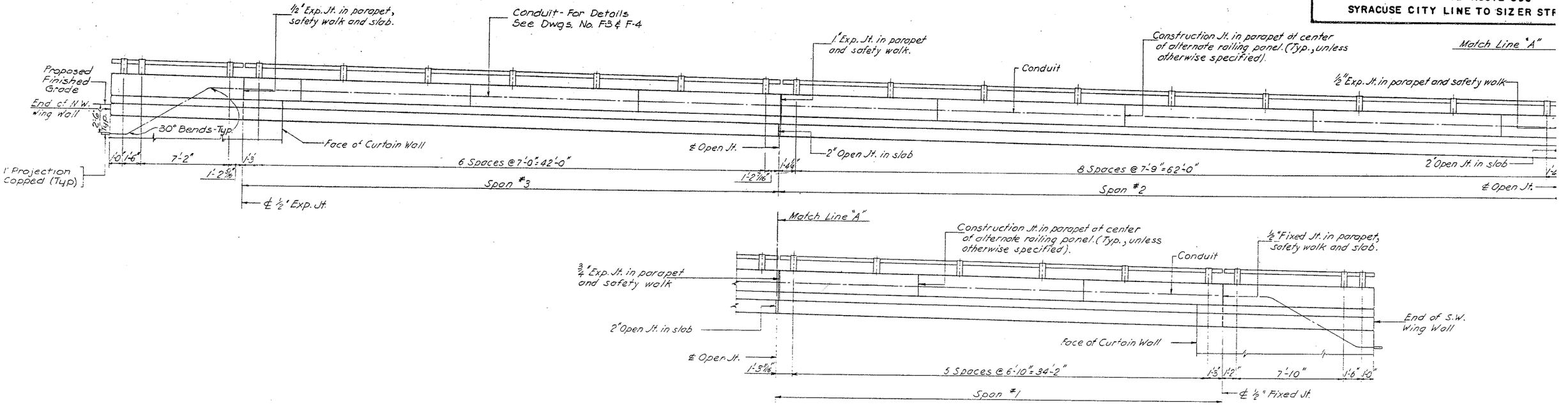

ELEVATION OF WEST RAILING

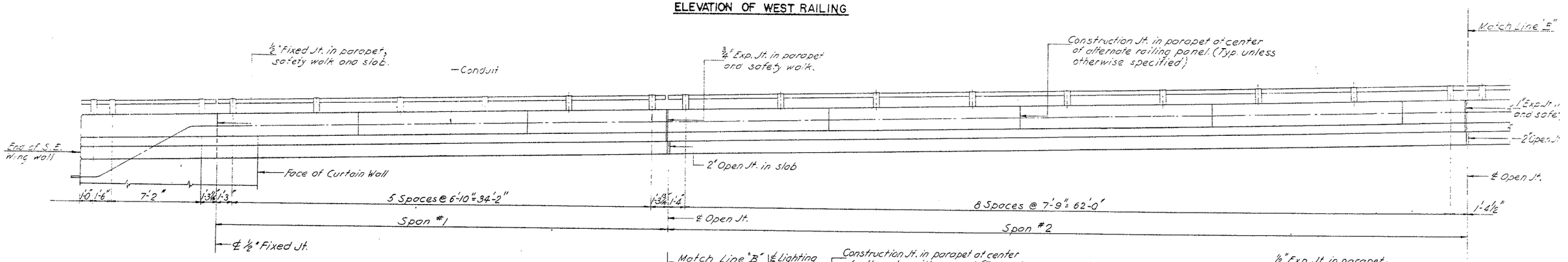

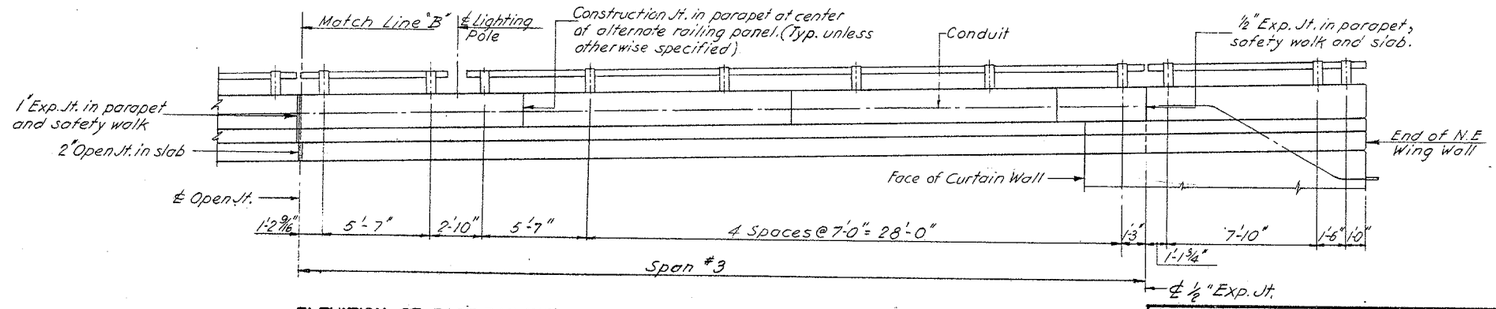

ELEVATION OF EAST RAILING

NOTES:
1. ALL DIMENSIONS SHOWN ON THIS DRAWING ARE HORIZONTAL DIMENSIONS.
2. RAILING POSTS SHALL BE PLACED PERPENDICULAR TO THE TOP OF PARAPET. POST SPACINGS ARE SHOWN BY HORIZONTAL DIMENSIONS ALONG BRIDGE FASCIA.
3. SEE DWG. NO. F-18 FOR RAILING DETAILS.

PREPARED AND RECOMMENDED BY
LEONARD S. WEGMAN CO.
BY Herbert Leonard Wegman
N.Y.S.P.E. LIC. 23287 DATE 12-9-63

F.A.I. 81 OVER EAST CALTHROP AVENUE

RAILING ELEVATIONS

DRAWN BY:	CHECKED BY:	LEONARD S. WEGMAN CO. ENGINEERS	SCALE 1" = 1'-0"
AK	FG	235 EAST 45TH STREET, NEW YORK 17, N.Y.	
REVIEWED BY:	DATE		DWG. NO.
Ken Hilliard	12-9-63		

BRADLEY PRESS, INC., BROOKLYN 17, N.Y. REPRINTED, NO. 4006

F.I.C. 64-7

FED. RD. REG. NO.	STATE	FEDERAL AID PROJECT NO.	SHEET NO.
1	NEW YORK	I-81-2(80)	217

INTERSTATE ROUTE 505

SYRACUSE CITY LINE TO SIZER STR

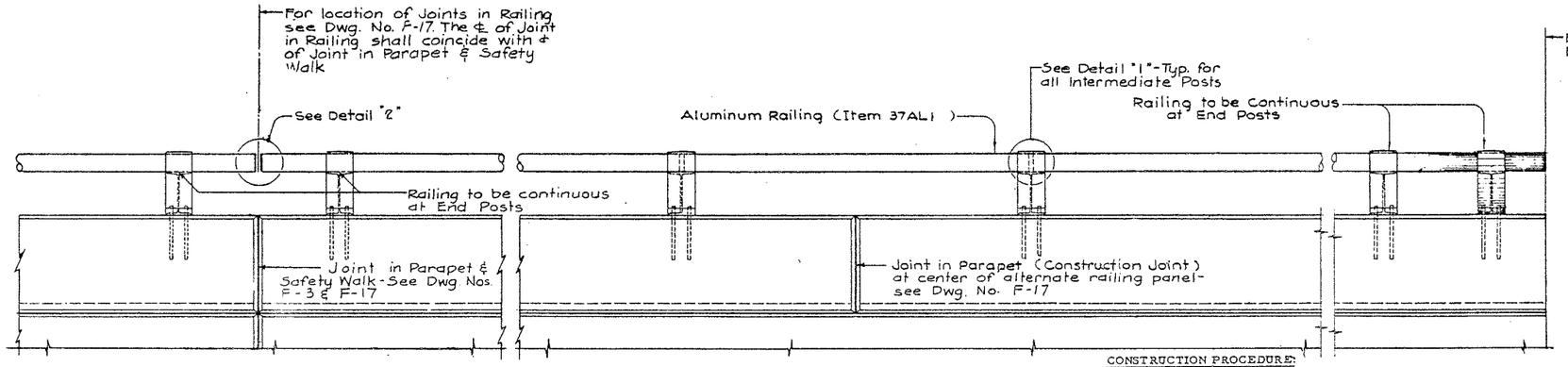

PARTIAL ELEVATION OF RAILING AND PARAPET

SCALE: 3/4" = 1'-0"

CONSTRUCTION PROCEDURE:

1. POUR SLAB.
2. SET STONE CURBS (GRANITE) & POUR SAFETY WALKS TO PROPER LINE AND GRADE. SAFETY WALK NOT TO BE SCORED.
3. SET RAILING ANCHOR BOLTS BY MEANS OF TEMPLATE AND POUR PARAPET. ERECT RAILING.
4. ANCHOR BOLTS SHALL BE CUT OFF 1/8" ABOVE NUT AND PEENED. THE CUT TOPS SHALL BE PAINTED AS REQUIRED BY THE SPECIFICATIONS FOR M 18A, EXCEPT THAT THE FINAL TWO (2) COATS SHALL BE ALUMINUM PAINT COMPLYING WITH THE SPECIFICATIONS FOR M 18J.

RAILING NOTES

1. FOR COMPOSITION OF ALUMINUM ALLOY POSTS, RAILS, SET SCREWS AND SHIMS SEE SPECIAL SPECIFICATION FOR ITEM 37AL1
2. UNLESS OTHERWISE SPECIFIED THE FOLLOWING REQUIREMENTS SHALL BE MAINTAINE

DRAFT ANGLES	= 3°
CORNER RADII	= 1/8"
FILLETS	= 1/2"R
CASTING TOLERANCES	= ± 1/16"
WALL THICKNESS	= ± 1/32"

GATES RISERS AND SEAMS TRIMMED FLUSH

3. BEVELED CAST ALUMINUM SHIMS MAY BE REQUIRED TO OBTAIN PROPER ALIGNMENT. THE COST OF FURNISHING AND PLACING THESE SHIMS SHALL BE INCLUDED IN THE UNI PRICE BID FOR THE RAILING ITEMS.
4. ALL RAILING POSTS OF THE SINGLE RAIL TYPE RAILING SHALL BE SET PERPENDICUL TO THE TOP OF THE PARAPET.
5. RAILINGS ARE TO BE ERECTED SO THAT THE RAIL IS PARALLEL TO THE TOP OF THE AND THE POSTS ARE PERPENDICULAR TO THE TOP OF THE PARAPET. SINCE THE FINISHED RAILINGS MUST MEET ALL REQUIREMENTS OF FIT, ALINEMENT AND GRADE TO THE FULL SATISFACTION OF THE ENGINEER, IT IS SUGGESTED THAT COMPLETE FIELD MEASUREMENTS BE MADE BEFORE ANY SHOP FABRICATION W IS PERFORMED. ANCHOR BOLTS, NUTS AND WASHERS FOR THE RAILING WILL BE PAI FOR UNDER STRUCTURAL STEEL - ITEM 29.

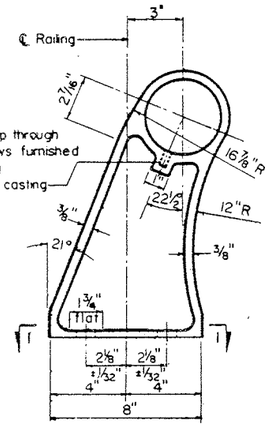

SIDE ELEVATION

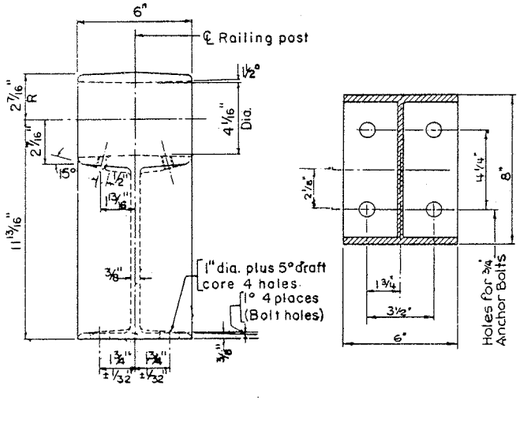

FRONT ELEVATION

SECTION 1-1

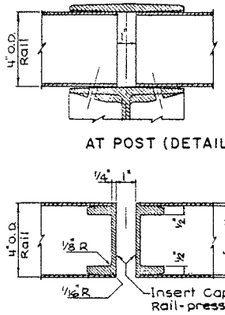

RAILING JOINT DETAILS

SCALE: 3" = 1'-0"

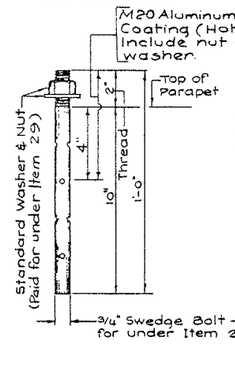

RAILING ANCHOR BOLT DETAIL

SCALE: 3" = 1'-0"

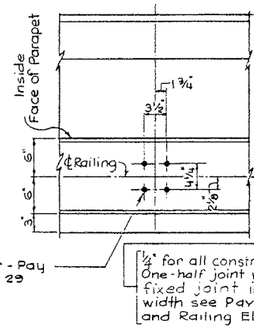

AT RAILING POST

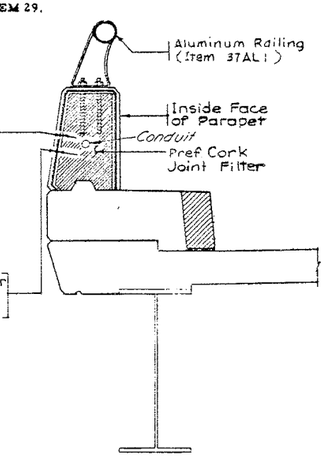

AT JOINT IN PARAPET

RAILING POST DETAILS

SCALE: 3" = 1'-0"

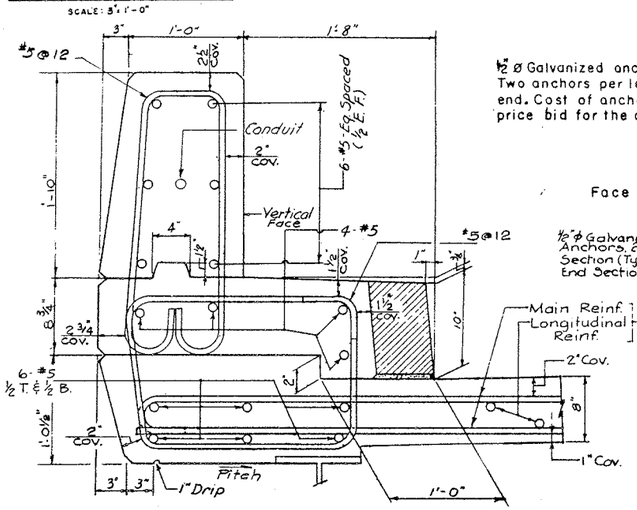

PARAPET & SAFETY WALK REINFORCEMENT DETAIL

SCALE: 1 1/2" = 1'-0"

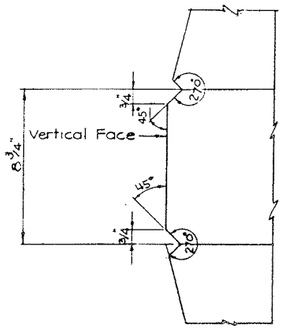

FASCIA SCORING DETAIL

SCALE: 3" = 1'-0"

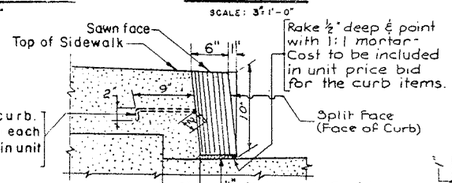

TYPICAL SECTION

SCALE: 1" = 1'-0"

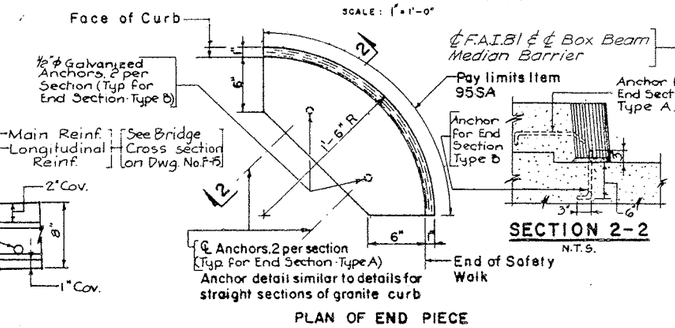

PLAN OF END PIECE

SCALE 1/2" = 1'-0"

GRANITE CURB DETAILS

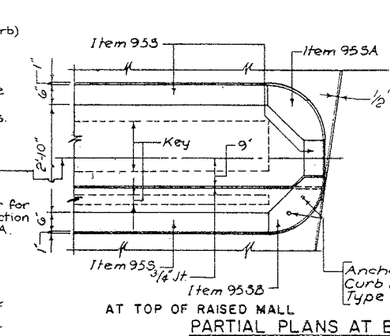

AT TOP OF RAISED MALL

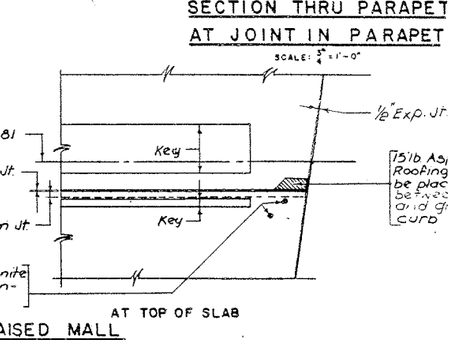

AT TOP OF SLAB

PARTIAL PLANS AT END OF RAISED MALL

SCALE: 1" = 1'-0"

SECTION THRU PARAPET AT JOINT IN PARAPET

SCALE: 3" = 1'-0"

PLAN OF PARAPET AND SAFETY WALK

(SHOWN WITH RAILING REMOVED)

SCALE: 1" = 1'-0"

Box Beam Median Barrier Item 33 MBS not shown, See Dwg Nos. F-3, F-15 & F-21 for Location & Details

F.A.I. 81 OVER EAST CALTHROP AVENI
RAILING, PARAPET & CURB DETAILS

PREPARED AND RECOMMENDED BY LEONARD S. WEGMAN CO.

BY Herbert Wegman

N.Y.S.P.E. LIC. 23287 DATE 12-9-63

DRAWN BY:	CHECKED BY:
MB BE	JC
REVIEWED BY:	DATE
Leonard	12-9-63

LEONARD S. WEGMAN CO. ENGINEERS
235 EAST 45TH STREET, NEW YORK 17, N. Y.

SCALE: AS NO

DWG. NO.

F.I.C. 64-7

FED. RD. REG. NO.	STATE	FEDERAL AID PROJECT NO.	SHEET NO.	T S
1	NEW YORK	I-81-2(80)	218	2

INTERSTATE ROUTE 505
SYRACUSE CITY LINE TO SIZER STREET

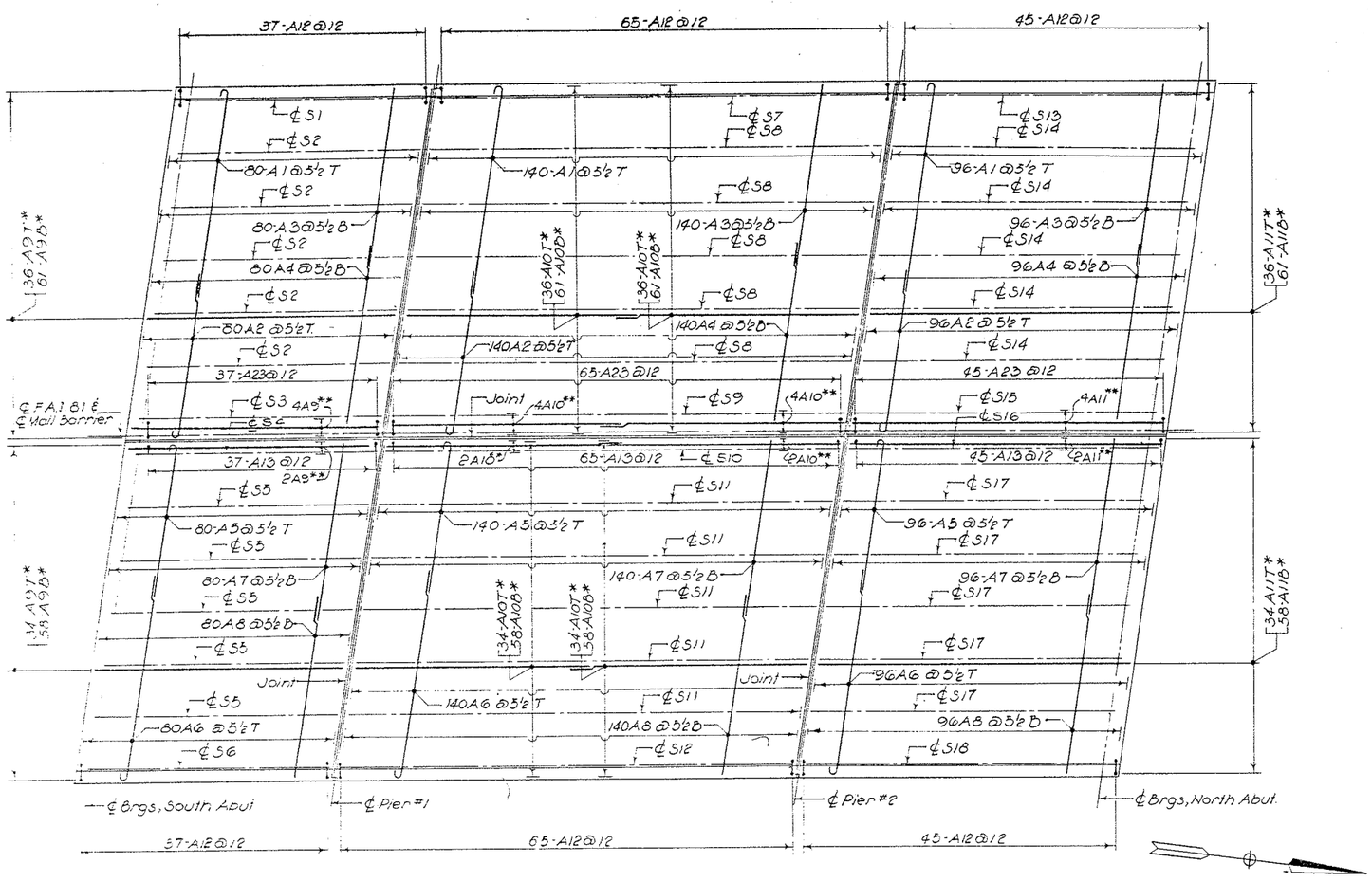

SLAB REINFORCEMENT PLACEMENT DIAGRAM

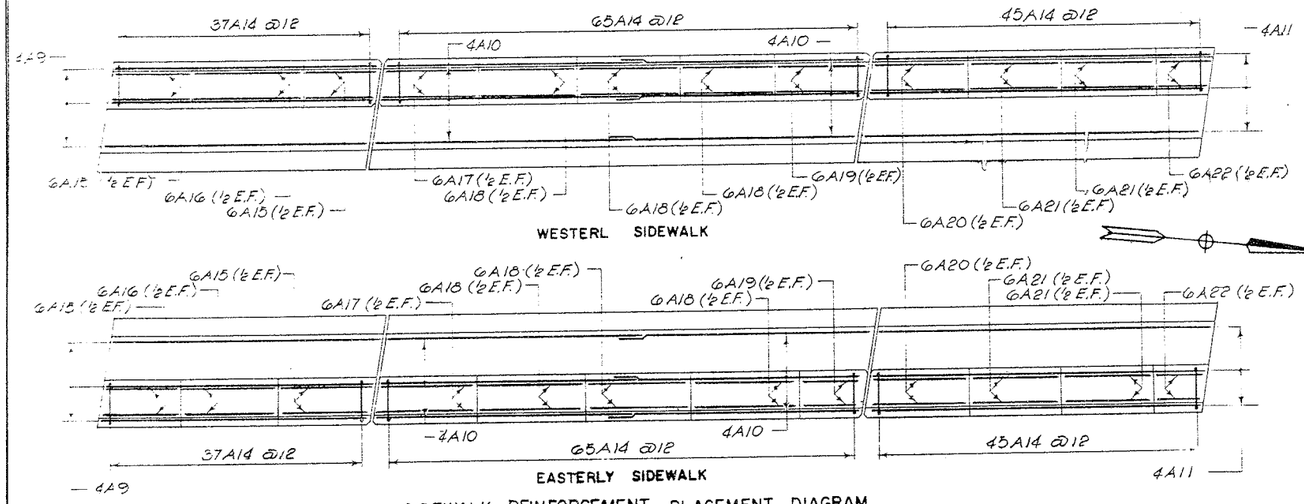

SIDEWALK REINFORCEMENT PLACEMENT DIAGRAM

SLAB BAR SCHEDULE

Mark	Size	No. Req'd N.B.	No. Req'd S.B.	Length	Type	A	B	C	D	E	G	H	Location
A1	#5	—	316	29'-3"	1	0'-7"	28'-8"						①
A2	↓	—	316	23'-1"	1	0'-7"	22'-6"						↓
A3		—	316	24'-10"	Str.								
A4		—	316	25'-0"	Str.								
A5		316	—	21'-4"	1	0'-7"	20'-9"						
A6		316	—	20'-3"	1	0'-7"	28'-8"						
A7		316	—	24'-6"	Str.								↑
A8		316	—	25'-2"	Str.								①
A9		99	104	36'-4"	Str.								①②④
A10		198	208	32'-9"	Str.								↓
A11		99	104	44'-0"	Str.								①②④
A12		147	147	7'-4"	11	0'-7"	1'-4"	1'-10"	1'-4"	2'-0"	0'-7"	0'-2"	①②
A13		147	—	1'-9"	3		0'-6"	1'-4"					①②
A14		147	147	6'-3"	2	0'-7"	2'-0¾"	0'-8"	2'-0¾"		0'-7"		③
A15		12	12	11'-0"	Str.								↓
A16		6	6	13'-4"	Str.								③
A17		6	6	12'-7"	Str.								↑
A18		18	18	15'-2	Str.								
A19		6	6	4'-10	Str.								
A20		6	6	11'-4"	Str.								
A21		12	12	13'-8"	Str.								
A22	↑	6	6	4'-5"	Str.								③
A23	#5	—	147	7'-3"	13	0'-7"	1'-6"	0'-7"	1'-3"	1'-3"		1'-3"	F=1'-10" ②

Location:
① Slab
② Sidewalk
③ Parapet
④ Median

NOTES:
1. SEE DWG. NO. F-16 FOR SUPERSTRUCTURE NOTES.
2. ALL BAR REINFORCEMENT SHOWN ON THIS DRAWING SHALL BE PAID FOR UNDER ITEM 28.
3. CONCRETE USED FOR BRIDGE SLAB SHALL BE PAID FOR UNDER ITEM 18M. CONCRETE USED FOR SAFETY WALKS, PARAPETS AND MALL SHALL BE PAID FOR UNDER ITEM 18
4. SEE DWG. NO. F-13 FOR REINFORCEMENT BENDING DIAGRAMS.
5. SEE "BRIDGE CROSS SECTION ON DWG. NO. F-15 FOR LOCATION OF BARS MARKED THUS *.
6. SEE DETAIL '3' ON DWG. NO. F-15 FOR LOCATION OF BARS MARKED THUS **.
7. SEE "PARAPET & SAFETY WALK REINFORCEMENT DETAILS" ON DWG. NO. F-18 FOR ADDITIONAL REINFORCEMENT PLACEMENT DETAILS.

PREPARED AND RECOMMENDED BY
LEONARD S. WEGMAN CO.
BY Herbert Wegman
N.Y.S. P.E. LIC. 23287 DATE 12-9-63

F.A.I. 81 OVER EAST CALTHROP AVENUE
SLAB REINFORCEMENT

DRAWN BY: BB	CHECKED BY: JC LPe	LEONARD S. WEGMAN CO. ENGINEERS 235 EAST 45TH STREET, NEW YORK 17, N.Y.	SCALE NO S
REVIEWED BY: Leonard Wegman	DATE 12-9-63		DWG. NO.

1031529

F.I.C. 647

FED. RD. REG. NO.	STATE	FEDERAL AID PROJECT NO.	SHEET NO.	TOT SHE
1	NEW YORK	I-81-2(80)	219	28

INTERSTATE ROUTE 505
SYRACUSE CITY LINE TO SIZER STREET

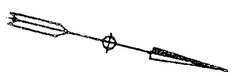

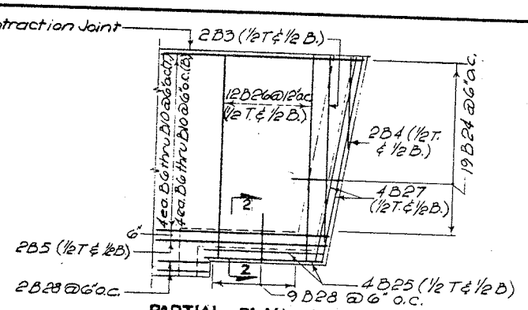

PARTIAL PLAN A
(For N.B. Approach Slab only)

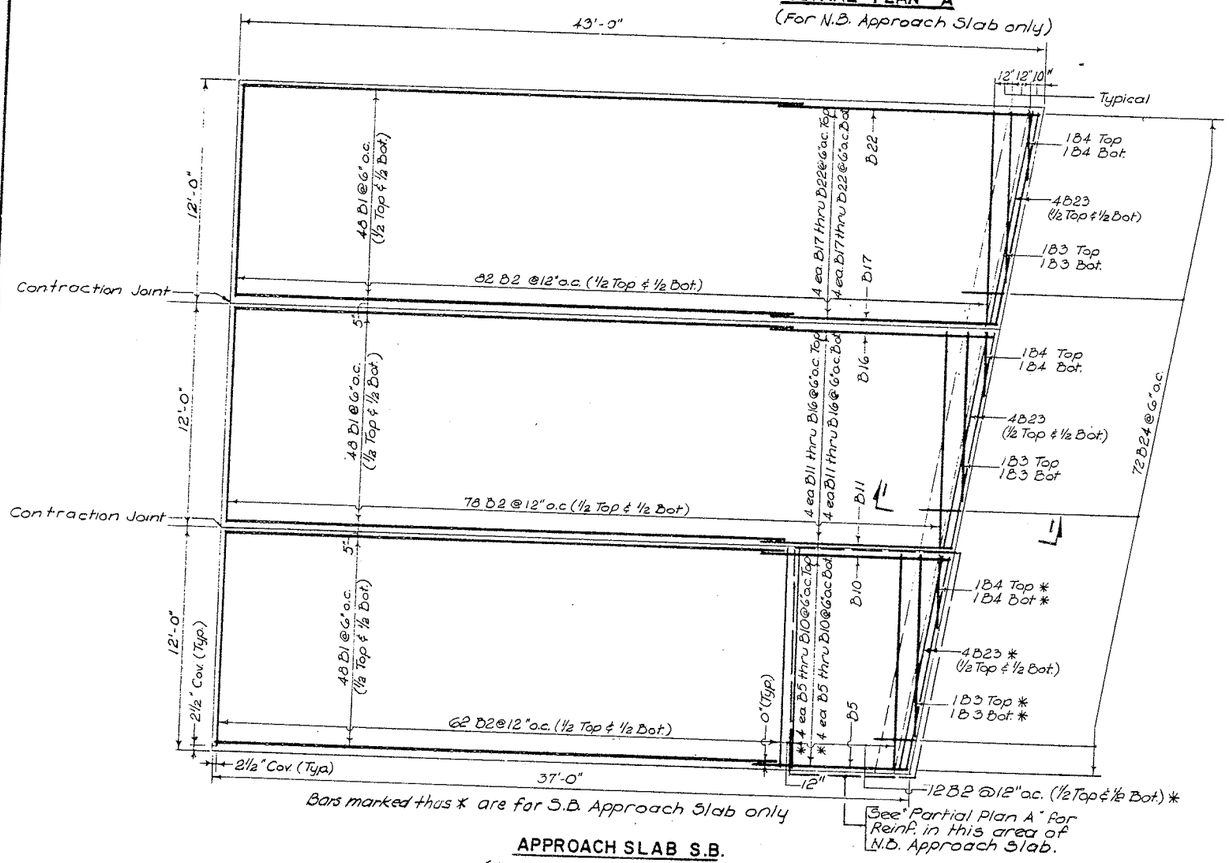

Bars marked thus * are for S.B. Approach Slab only

APPROACH SLAB S.B.
(Approach Slab N.B. identical except as otherwise noted.)

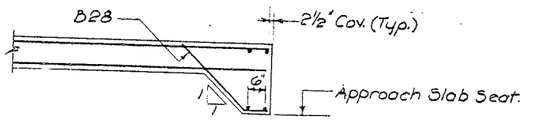

SECTION 2-2

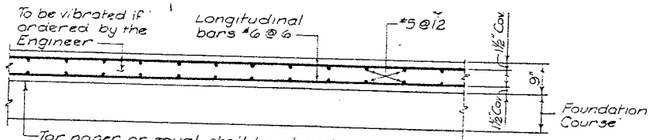

DETAIL OF REINFORCED CONCRETE APPROACH SLAB

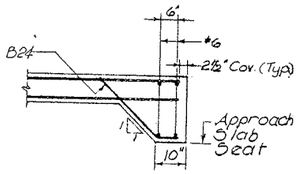

SECTION 1-1

APPROACH SLAB BAR SCHEDULE

Mark	Size	No. Reqd	Length	Type	B	C	H	K
B1	#6	288	30'-0"	Str.				
B2	#5	456	11'-7"					
B3	#5	12	9'-2"					
B4	#5	12	2'-8"					
B5	#6	10	8'-3"					
B6		16	8'-7"					
B7		16	8'-11"					
B8		16	9'-3"					
B9		16	9'-7"					
B10		16	9'-11"					
B11		16	10'-3"					
B12		16	10'-7"					
B13		16	10'-11"					
B14	#6	16	11'-3"	Str.				
B15	#6	16	11'-7"	Str.				
B16		16	11'-11"					
B17		16	12'-3"					
B18		16	12'-7"					
B19		16	12'-11"					
B20		16	13'-3"					
B21		16	13'-7"					
B22		16	13'-11"					
B23		24	11'-7"	Str.				
B24	#6	139	2'-8"	3	2'-1"	0'-7"	1'-6"	1'-6"
B25	#6	4	6'-4"	Str.				
B26	#5	12	10'-9"	Str.				
B27	#6	4	10'-9"	Str.				
B28	#6	11	2'-8"	3	2'-1"	0'-7"	1'-6"	1'-6"

NOTES:
1. CONCRETE USED FOR APPROACH SLABS WILL BE PAID FOR UNDER ITEM 47B.
2. ALL BAR REINFORCEMENT SHOWN ON THIS DRAWING WILL BE PAID FOR UNDER ITEM 28.
3. SEE DWG. NO. F-13 FOR REINFORCEMENT BENDING DIAGRAMS.

PREPARED AND RECOMMENDED BY
LEONARD S. WEGMAN CO.
BY Herbert Wegman II

F.A.I. 81 OVER EAST CALTHROP AVENUE
APPROACH SLABS

DRAWN BY:	CHECKED BY:	LEONARD S. WEGMAN CO.	STATE
AB	JG		

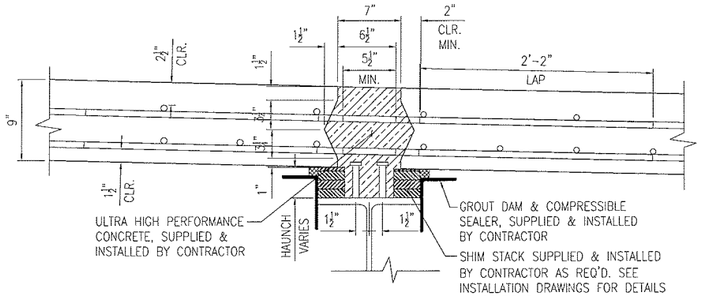

C / 5 SECTION C-C
LONGITUDINAL UHPC JOINT OVER BEAMS

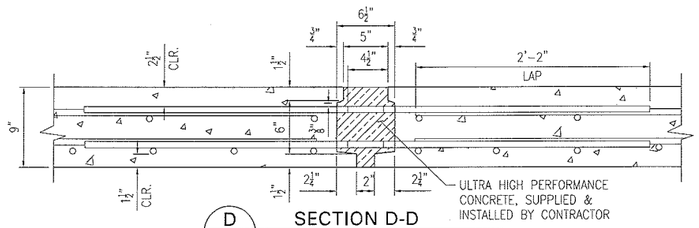

D / 5 SECTION D-D
TRANSVERSE UHPC BETWEEN DECK PANELS

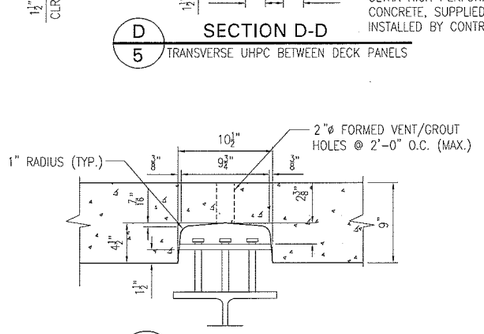

E / 5 SECTION E-E
NON-SHRINK GROUT JOINT OVER INTERIOR BEAMS

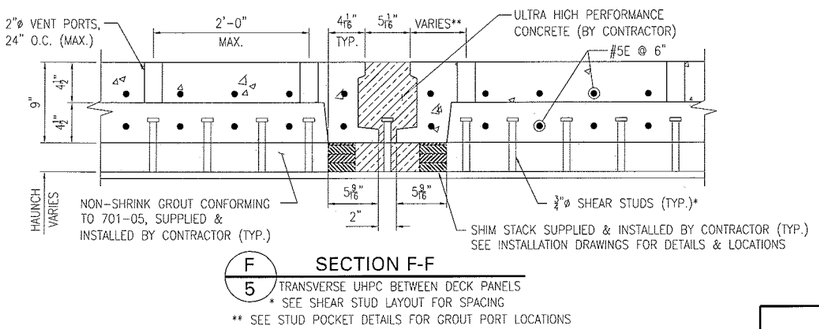

F / 5 SECTION F-F
TRANSVERSE UHPC BETWEEN DECK PANELS
* SEE SHEAR STUD LAYOUT FOR SPACING
** SEE STUD POCKET DETAILS FOR GROUT PORT LOCATIONS

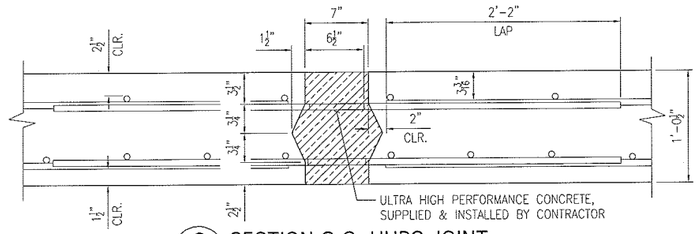

G / 5 SECTION G-G, UHPC JOINT
PRECAST APPROACH SLABS-LONGITUDINAL JOINT

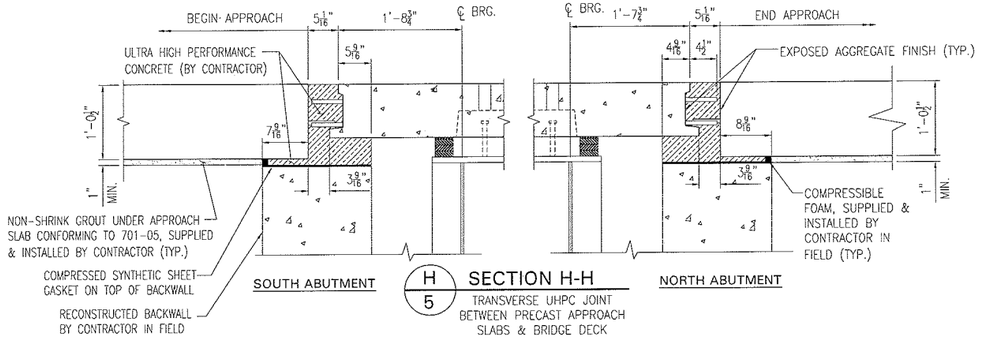

H / 5 SECTION H-H
TRANSVERSE UHPC JOINT BETWEEN PRECAST APPROACH SLABS & BRIDGE DECK

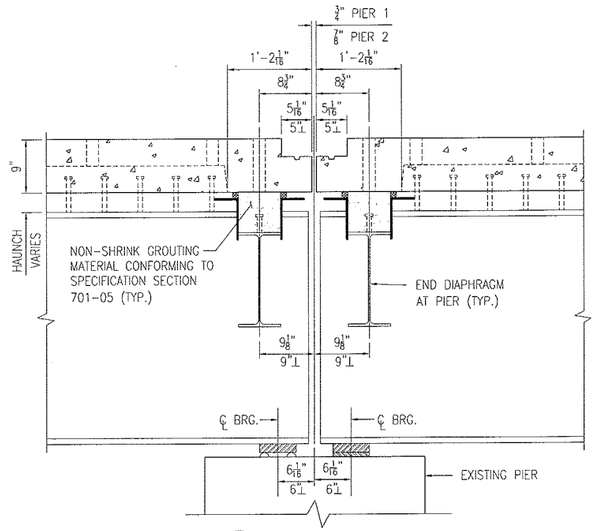

I / 5 SECTION I-I
PIER DETAIL

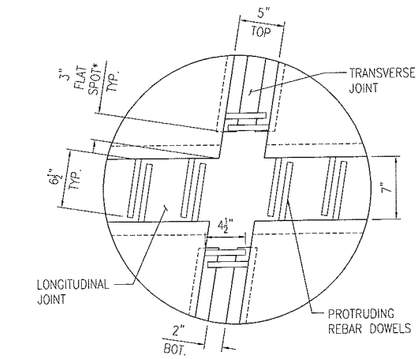

3 / 5 PLAN VIEW - FULL WIDTH INTERIOR JOINT
* STOP BOTTOM LIP ON TRANSVERSE JOINT 3" IN FROM END OF PANEL (SEE ISOMETRIC VIEW). ONLY REQUIRED ON TRANSVERSE JOINTS THAT GO FULL WIDTH OF BRIDGE

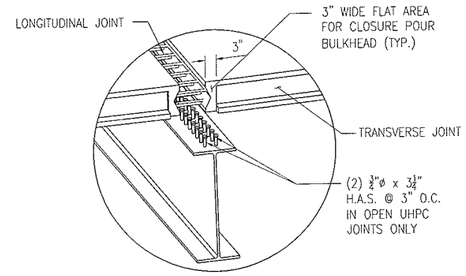

ISOMETRIC VIEW-INTERIOR JOINT
NOTE: ALL SURFACES IN JOINT TO BE EXPOSED AGGREGATE

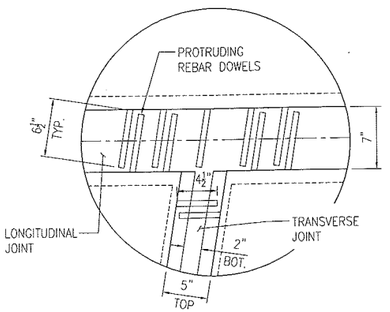

4 / 5 PLAN VIEW - INTERMEDIATE INTERIOR JOINT
BOTTOM LIP ON TRANSVERSE JOINT IS FULL WIDTH

FED. ROAD REG. NO.	STATE	CONTRACT NO.	SHEET NO.	TOTAL SHEETS
	N.Y.	D262027		
P.I.N. #: SABP.03		B.I.N. #: 1031529		
ACCELERATED BRIDGE PROGRAM-PHASE 1A, CONTRACT 3				
INTERSTATE 81 OVER EAST CALTHROP AVENUE				
CITY OF SYRACUSE				
ONONDAGA COUNTY				

THE FORT MILLER Co., Inc.
P.O. BOX 98
SCHUYLERVILLE, NY 12871
(518) 695-5000
(518) 695-4970 FAX
www.fortmiller.com

NO.	DATE	BY	DESCRIPTION

REVISIONS

I-81 OVER EAST CALTHROP AVENUE
CITY OF SYRACUSE

MISCELLANEOUS DETAILS

ENGINEER: NYSDOT

CONTRACTOR: SLATE HILL CONSTRUCTORS, INC. 6573 HERMAN ROAD WARNERS, NEW YORK 13164

DRAWN BY:	DATE	CHK'D BY:	SHEET	SCALE	F.M. JOB No.	DWG.
VCE	5/3/13	PJR	5	NONE	13716	E5

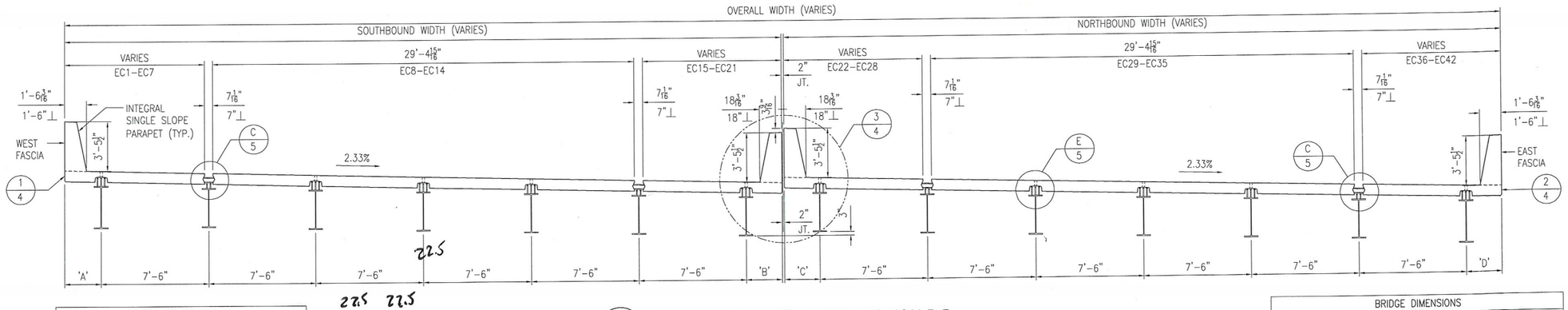

OVERHANG DIMENSIONS				
LOCATION	'A'	'B'	'C'	'D'
S.A.	2'–5 3/8"	2'–6"	2'–6 1/8"	2'–5 1/8"
PIER #1	2'–5"	2'–5 7/8"	2'–5 3/8"	2'–5 5/8"
PIER #2	2'–5"	2'–5 1/4"	2'–4 1/2"	2'–5 1/8"
N.A.	2'–4 7/8"	2'–4 3/4"	2'–3 7/8"	2'–6 1/2"

B 4 PROPOSED BRIDGE CROSS SECTION B-B

NOTE: ALL DIMENSIONS ARE ALONG THE CENTERLINE OF BEARING

BRIDGE DIMENSIONS				
LOCATION	S.B. WIDTH	N.B. WIDTH	CENTER JOINT	OVERALL WIDTH
SPAN 1–S.A.	49'–11 5/16"	49'–11 5/16"	2"	100'–0 5/8"
SPAN 1–PIER #1	49'–10 7/8"	49'–10 7/8"	2"	99'–11 3/4"
SPAN 2–PIER #1	49'–10 7/8"	49'–10 7/8"	2"	99'–11 3/4"
SPAN 2–PIER #2	49'–10 1/8"	49'–10 1/8"	2"	99'–10 1/4"
SPAN 3–PIER #2	49'–10 3/8"	49'–10 3/8"	2"	99'–10 1/4"
SPAN 3–N.A.	49'–9 7/8"	49'–9 7/8"	2"	99'–9 3/4"

NOTE: ALL DIMENSIONS ARE ALONG THE SKEW AT THE END OF THE BRIDGE DECK, ALONG THE CENTERLINE BEARING

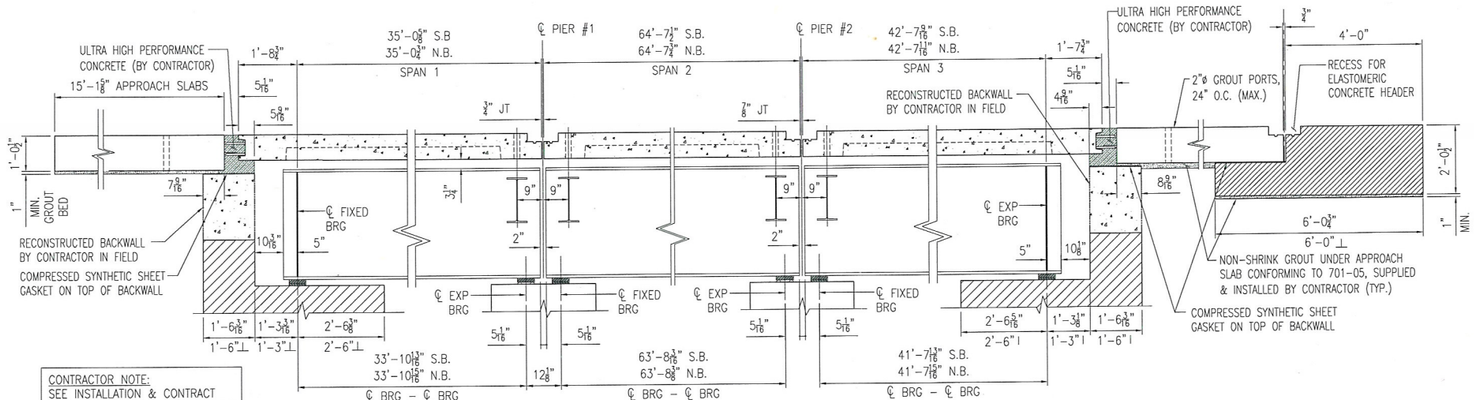

CONTRACTOR NOTE:
SEE INSTALLATION & CONTRACT DRAWINGS FOR ADDITIONAL DETAILS OF APPROACH SLAB INSTALLATION.

A 4 LONGITUDINAL SECTION A-A

ALONG SKEW

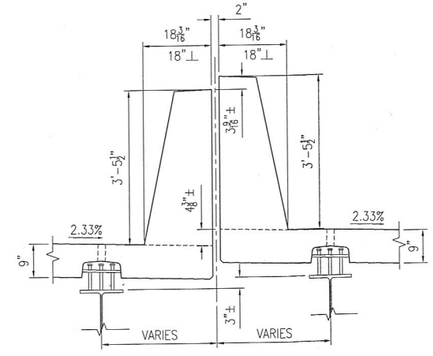

3 4 MEDIAN DETAIL

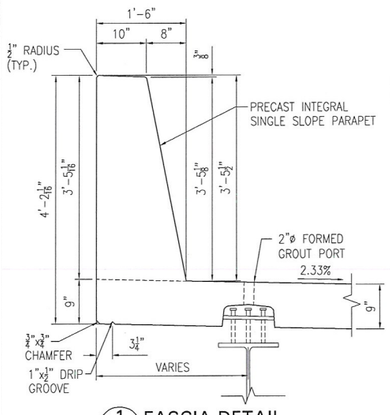

1 4 FASCIA DETAIL WEST FASCIA

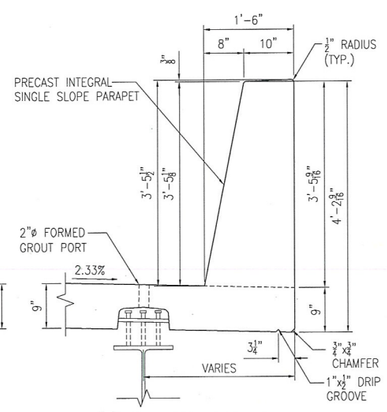

2 4 FASCIA DETAIL EAST FASCIA

FED. ROAD REG. NO.	STATE	CONTRACT NO.		SHEET NO.	TOTAL SHEETS	
	N.Y.	D262027				
P.I.N. #: SABP.03			B.I.N. #: 1031529			
ACCELERATED BRIDGE PROGRAM–PHASE 1A, CONTRACT 3						
INTERSTATE 81 OVER EAST CALTHROP AVENUE						
CITY OF SYRACUSE						
ONONDAGA COUNTY						

THE FORT MILLER Co., Inc.
P.O. BOX 98
SCHUYLERVILLE, NY 12871
(518) 695-5000
(518) 695-4970 FAX
www.fortmiller.com

NO.	DATE	BY	DESCRIPTION

REVISIONS

I-81 OVER EAST CALTHROP AVENUE

CITY OF SYRACUSE

BRIDGE SECTIONS

ENGINEER: NYSDOT

CONTRACTOR: SLATE HILL CONSTRUCTORS, INC. 6573 HERMAN ROAD WARNERS, NEW YORK 13164

DRAWN BY:	DATE	CHK'D BY:	SHEET	SCALE	F.M. JOB No.	DWG.
VCE	5/3/13	PJR	4	NONE	13716	E4

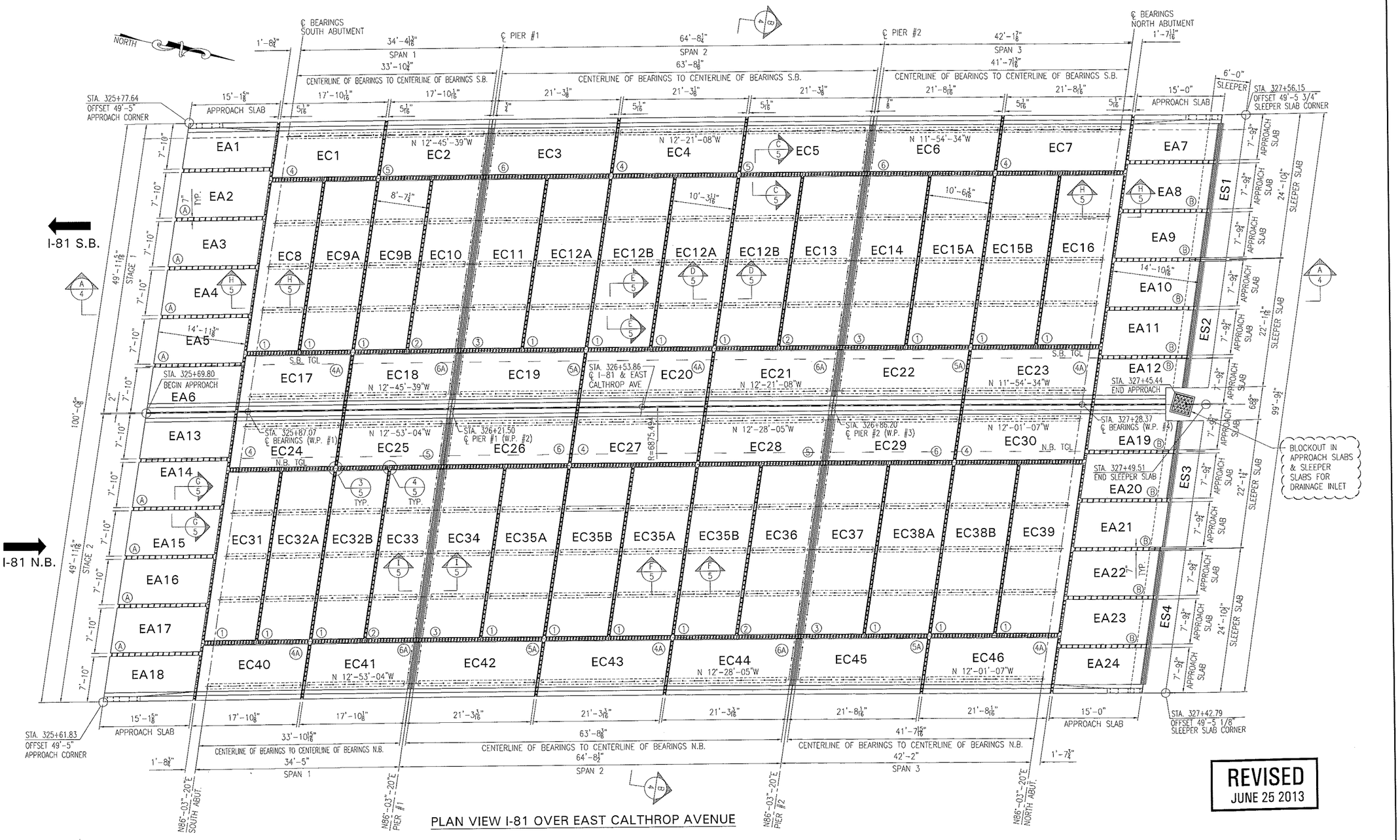

PLAN VIEW I-81 OVER EAST CALTHROP AVENUE

INDICATES PANEL TYPE

REVISED
JUNE 25 2013

FED. ROAD REG. NO.	STATE	CONTRACT NO.	SHEET NO.	TOTAL SHEETS
	N.Y.	D262027		

P.I.N. #: SABP.03 B.I.N. #: 1031529
ACCELERATED BRIDGE PROGRAM–PHASE 1A, CONTRACT 3
INTERSTATE 81 OVER EAST CALTHROP AVENUE
CITY OF SYRACUSE
ONONDAGA COUNTY

THE FORT MILLER Co., Inc.
P.O. BOX 98
SCHUYLERVILLE, NY 12871
(518) 695-5000
(518) 695-4970 FAX
www.fortmiller.com

NO.	DATE	BY	DESCRIPTION
1	6/24/13	VCE	ADDED BLOCKOUT IN MEDIAN FOR DRAINAGE INLET

REVISIONS

I-81 OVER EAST CALTHROP AVENUE
CITY OF SYRACUSE

BRIDGE DECK LAYOUT

ENGINEER: NYSDOT

CONTRACTOR: SLATE HILL CONSTRUCTORS, INC. 6573 HERMAN ROAD WARNERS, NEW YORK 13164

DRAWN BY:	DATE	CHK'D BY:	SHEET	SCALE	F.M. JOB No.	DWG.
VCE	5/3/13	PJR	2	NONE	13716	E3

PRECAST CONCRETE DETAILS

Revised 2013

2013

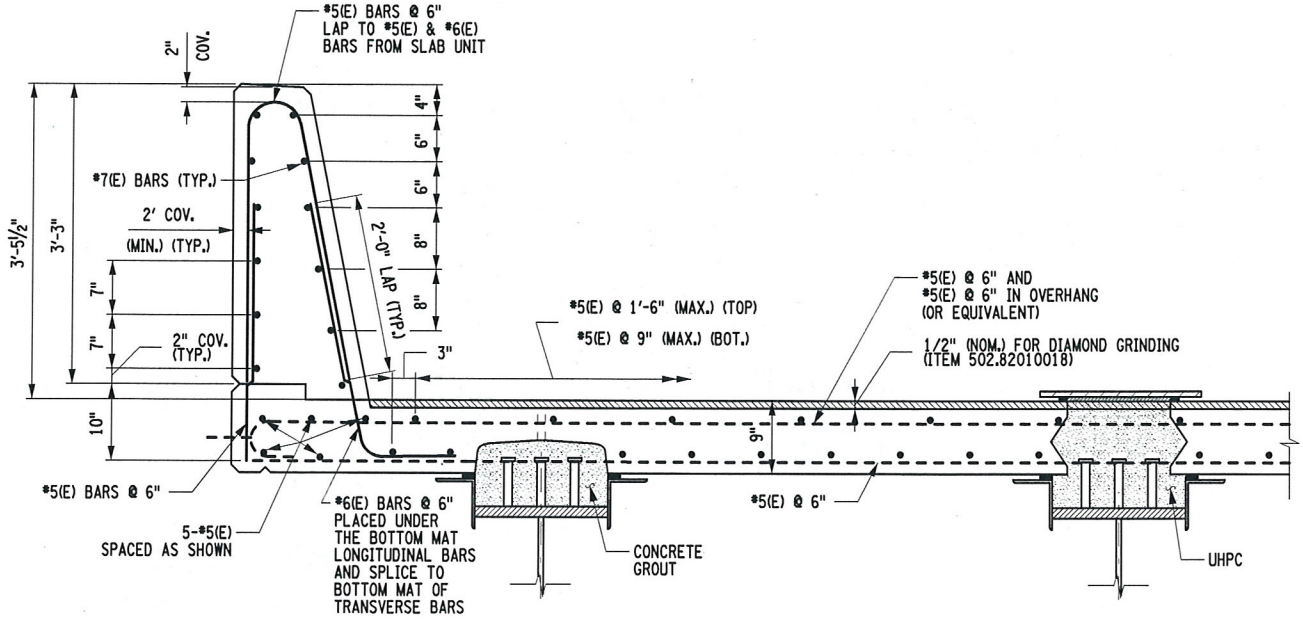

PRECAST BARRIER ON PRECAST BRIDGE DECK PANEL

NOTE: PANEL JOINT LOCATION SHOWN IS FOR ILLUSTRATIVE PURPOSES ONLY. ACTUAL JOINT LOCATION SHALL BE DETERMINED BY THE FABRICATOR.

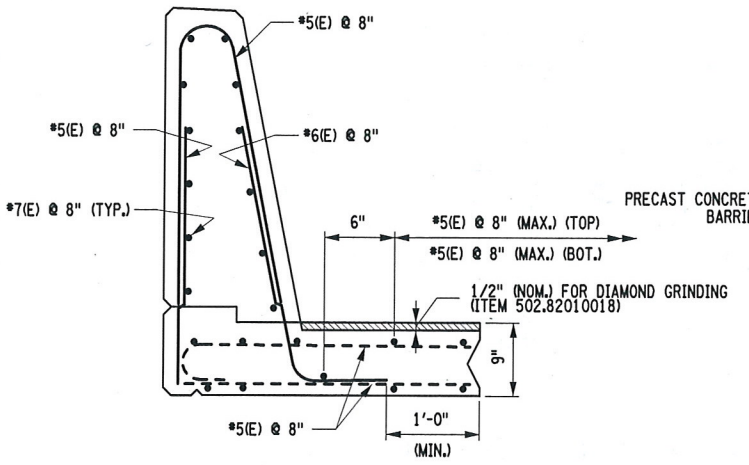

PRECAST BARRIER ON PRECAST APPROACH SLAB PANEL

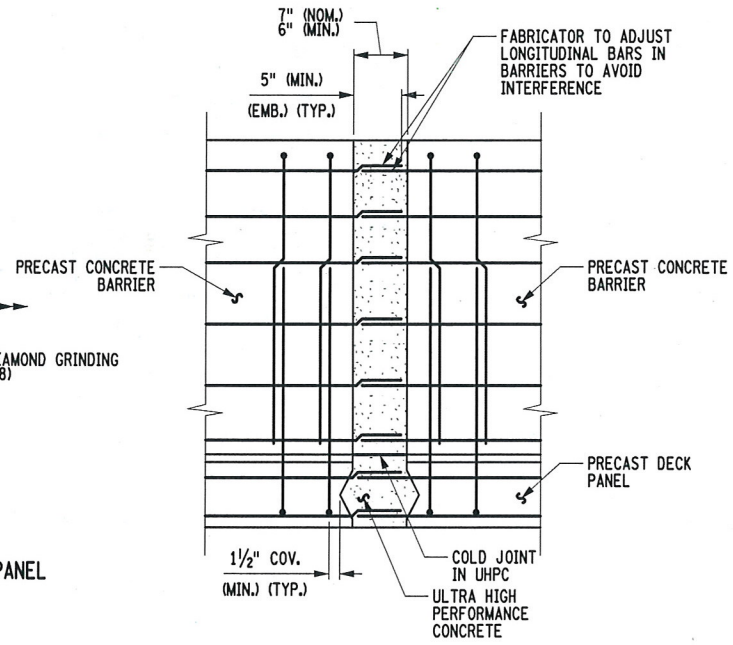

ELEVATION
TYPICAL UHPC BARRIER JOINT

NOTES:

FINAL COVER FOR STEEL REINFORCEMENT IN PRECAST PANELS SHALL BE 2" (MIN.) FOR TOP MAT AND 1½" FOR BOTTOM MAT.

(E) - DENOTES EPOXY COATED REINFORCEMENT

FOR OVERALL BARRIER DIMENSIONS, SEE THE "SINGLE SLOPE BARRIER" DETAILS IN THE APPROPRIATE BD'S.

THE SIZE AND NUMBER OF STUD SHEAR CONNECTORS VARIES. SEE BIN SPECIFIC CONTRACT DOCUMENTS FOR INFORMATION.

THE UHPC JOINTS IN THE BARRIER SHALL BE SMOOTH AND FLUSH WITH THE BARRIER SURFACE.

~~D262027~~

PRECAST CONCRETE DETAILS

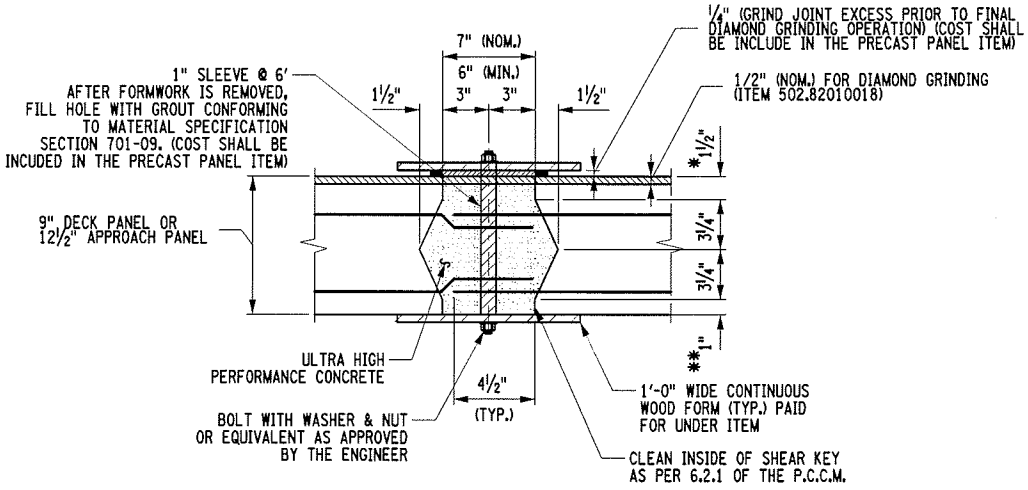

TYPICAL UHPC JOINT DETAIL

*THIS DIMENSION SHALL BE 3½" FOR UHPC JOINTS IN APPROACH PANELS

**THIS DIMENSION SHALL BE 2½" FOR UHPC JOINTS IN APPROACH PANELS

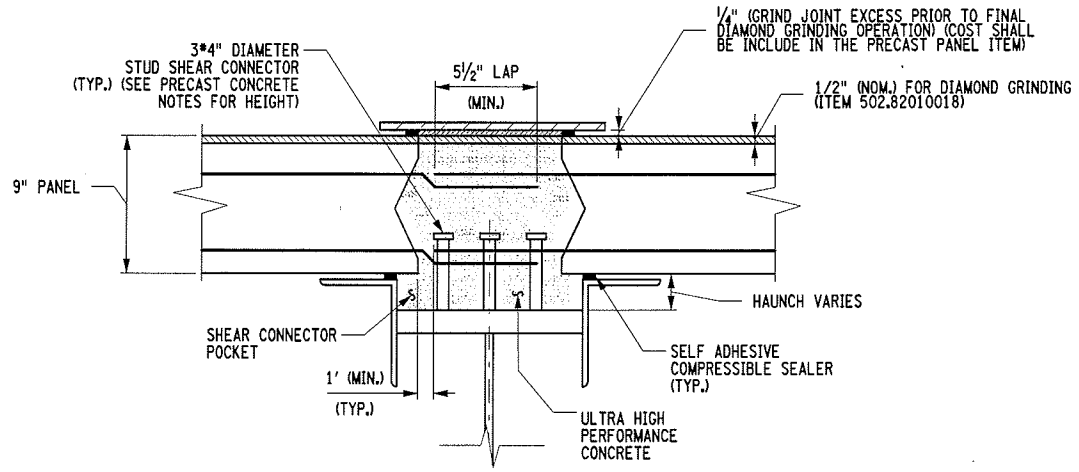

LONGITUDINAL UHPC JOINT OVER GIRDER DETAIL

NOTES:

FINAL COVER FOR STEEL REINFORCEMENT IN PRECAST PANELS SHALL BE 2" (MIN.) FOR TOP MAT AND 1½" FOR BOTTOM MAT.

THE SIZE AND NUMBER OF STUD SHEAR CONNECTORS VARIES. SEE BIN SPECIFIC CONTRACT DOCUMENTS FOR INFORMATION.

PRECAST CONCRETE DETAILS

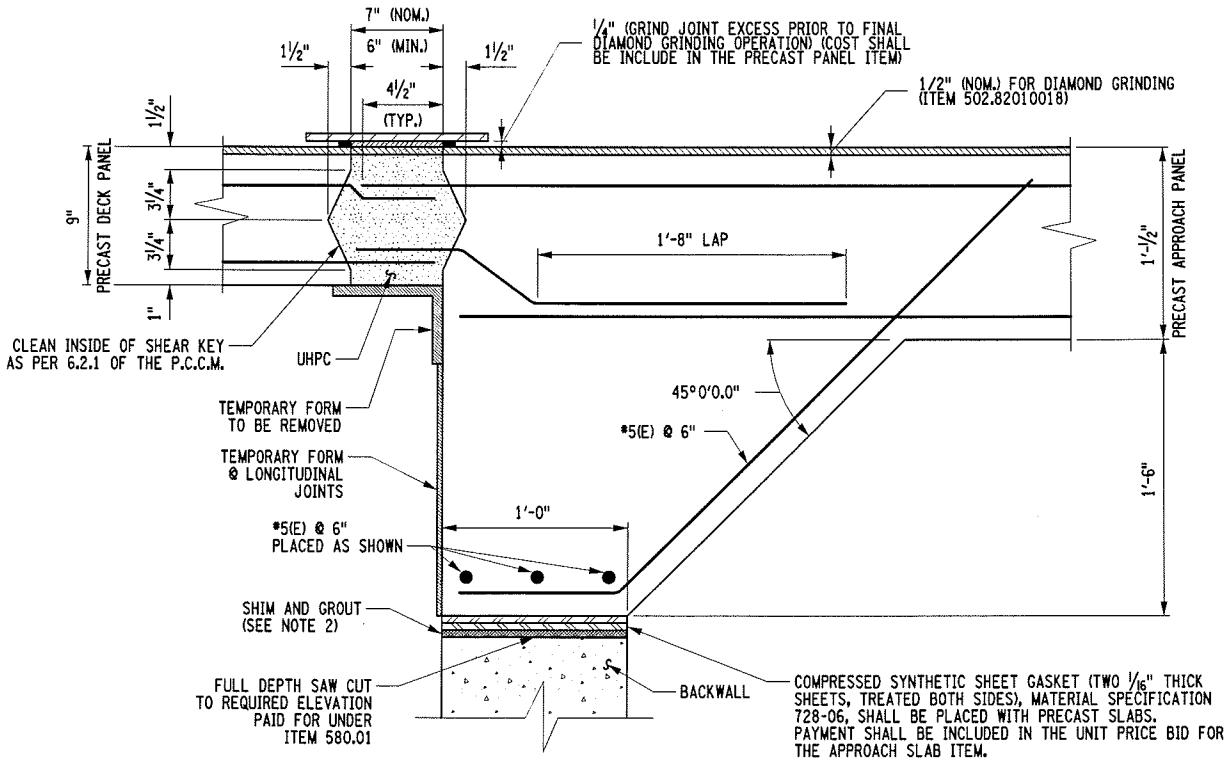

UHPC BACKWALL FIXED JOINT DETAIL

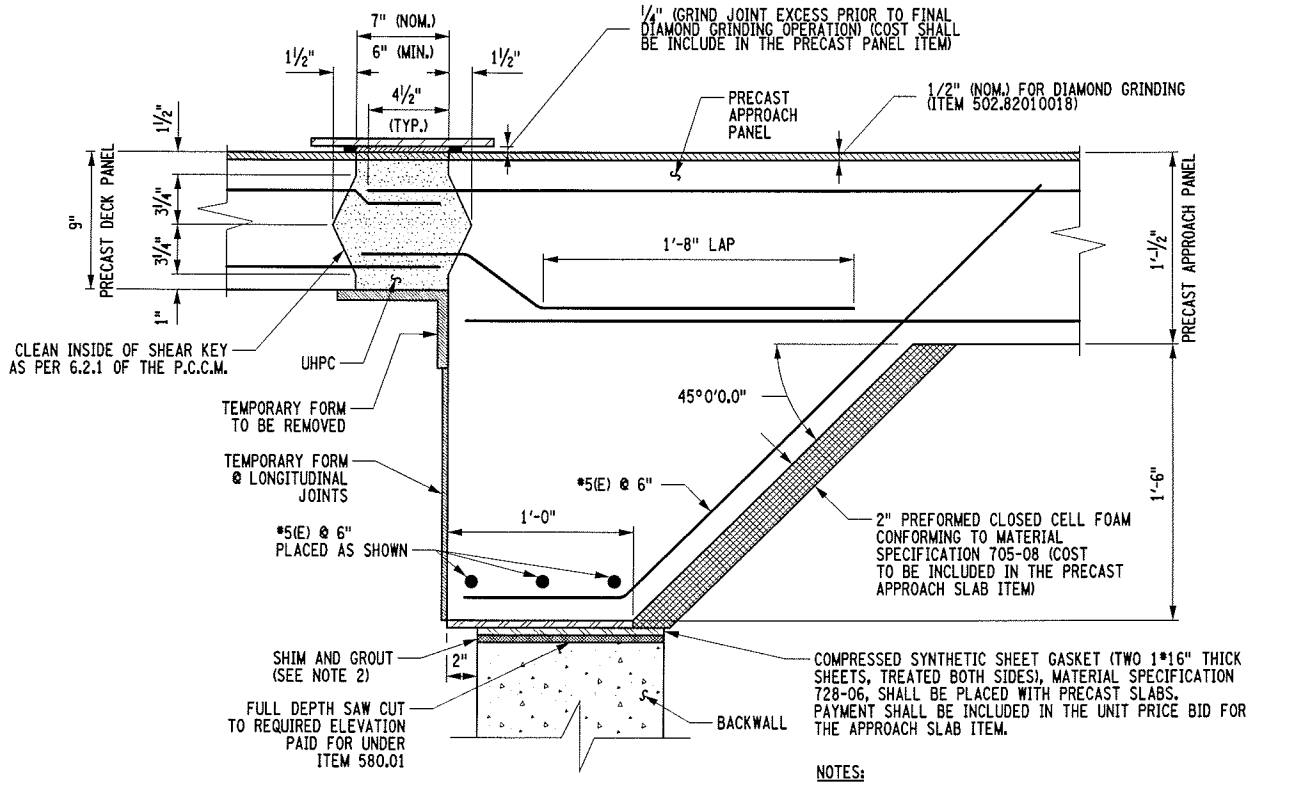

UHPC BACKWALL EXPANSION JOINT DETAIL

NOTES:

1. FINAL COVER FOR STEEL REINFORCEMENT IN PRECAST PANELS SHALL BE 2" (MIN.) FOR TOP MAT AND 1½" FOR BOTTOM MAT.

2. CONCRETE GROUTING MATERIAL SHALL CONFORM TO MATERIAL SPECIFICATION SECTION 701-06. COST SHALL BE INCLUDED IN PRICE BID FOR THE DECK PANEL ITEM.

D262027
PRECAST CONCRETE DETAILS

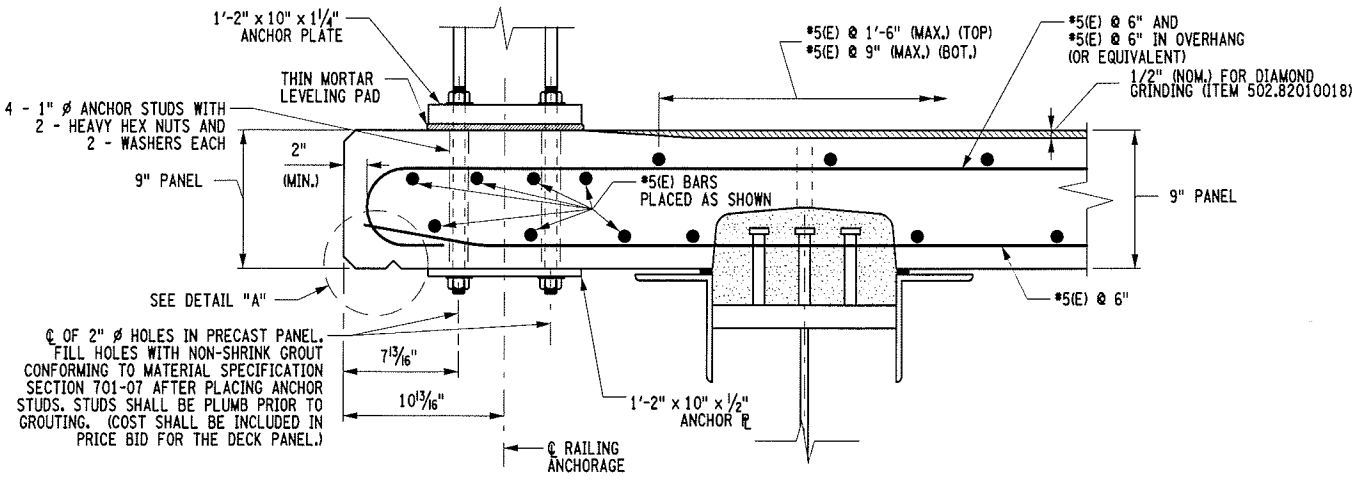

TYPICAL RAILING ANCHORAGE DETAIL

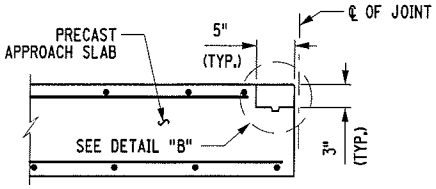

HEADER DETAIL IN PRECAST PANEL
FOR JOINT LOCATIONS
(PAID FOR UNDER ITEM 567.60)

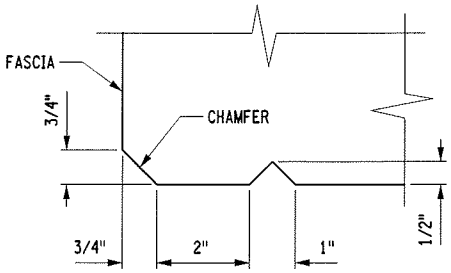

DETAIL "A"

NOTE:

DRIP GROOVE TO END 3' FROM FACES OF ABUTMENTS WITH A 90° TURN TOWARD FASCIA. GROOVE CONTINUES TO INTERSECTION WITH THE CHAMFER.

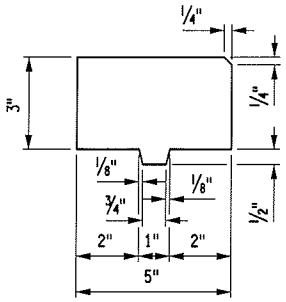

DETAIL "B"
ELASTOMERIC CONCRETE HEADER

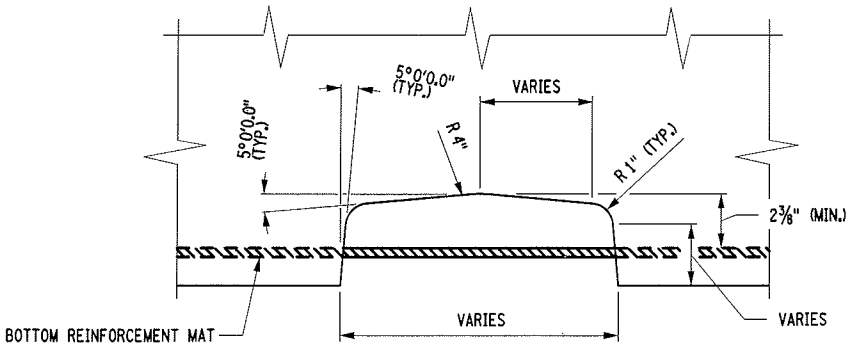

SHEAR CONNECTOR POCKET DETAIL

D262027
PRECAST CONCRETE DETAILS

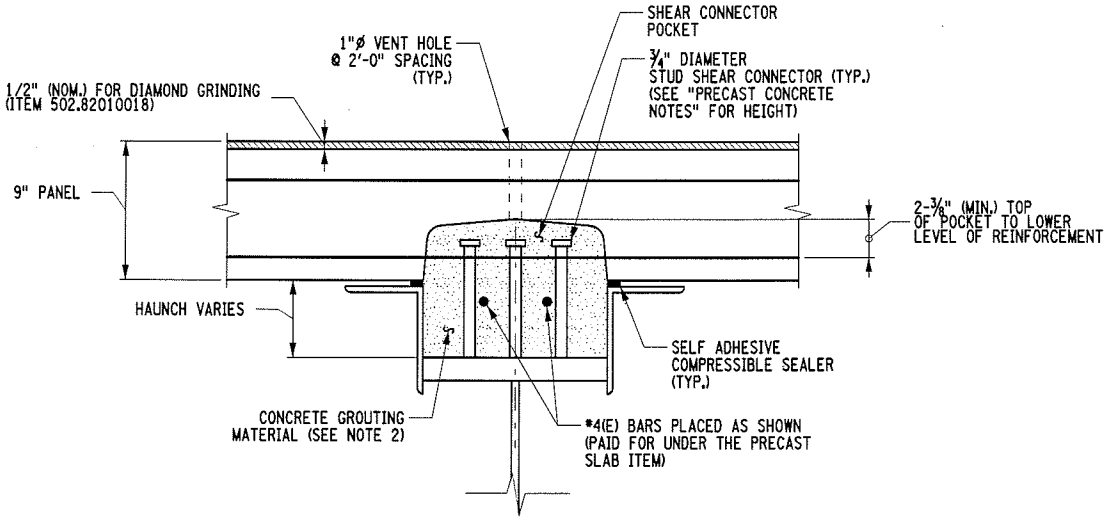

SHEAR CONNECTOR POCKET DETAIL HAUNCH ≥ 6"

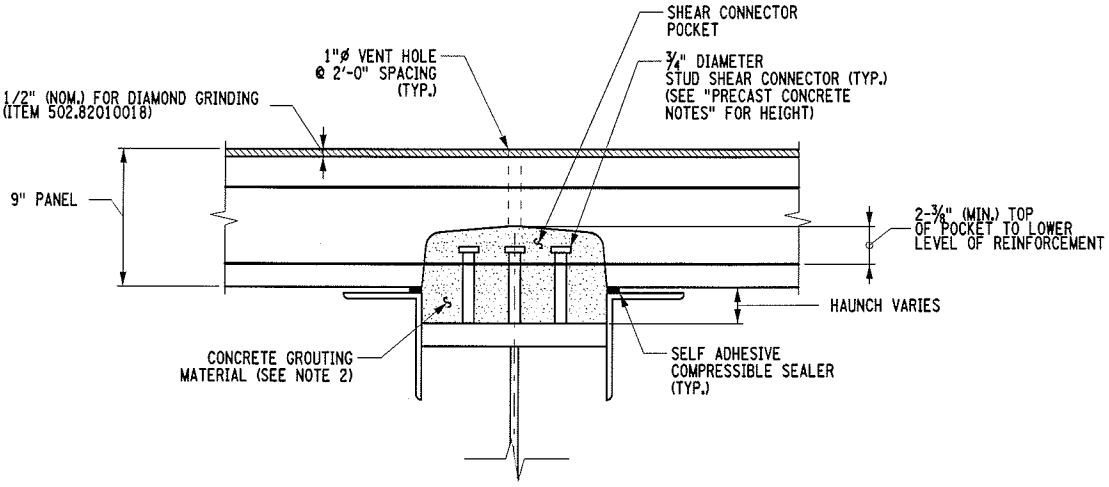

SHEAR CONNECTOR POCKET DETAIL W/HAUNCH

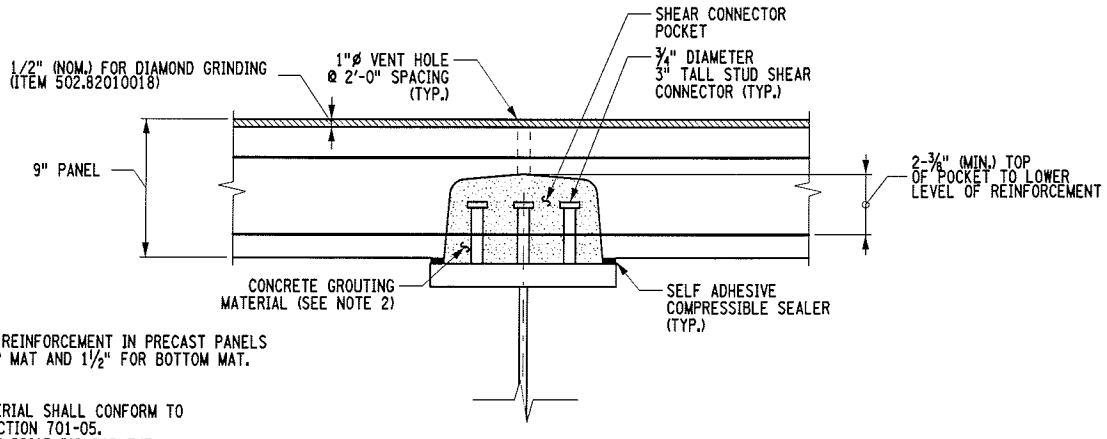

SHEAR CONNECTOR POCKET DETAIL W/O HAUNCH

NOTES:

1. FINAL COVER FOR STEEL REINFORCEMENT IN PRECAST PANELS SHALL BE 2" (MIN.) FOR TOP MAT AND 1½" FOR BOTTOM MAT.

2. CONCRETE GROUTING MATERIAL SHALL CONFORM TO MATERIAL SPECIFICATION SECTION 701-05. COST SHALL BE INCLUDED IN PRICE BID FOR THE DECK PANEL ITEM.

3. THE SIZE AND NUMBER OF STUD SHEAR CONNECTORS VARIES. SEE BIN SPECIFIC CONTRACT DOCUMENTS FOR INFORMATION.

D262027
PRECAST CONCRETE DETAILS

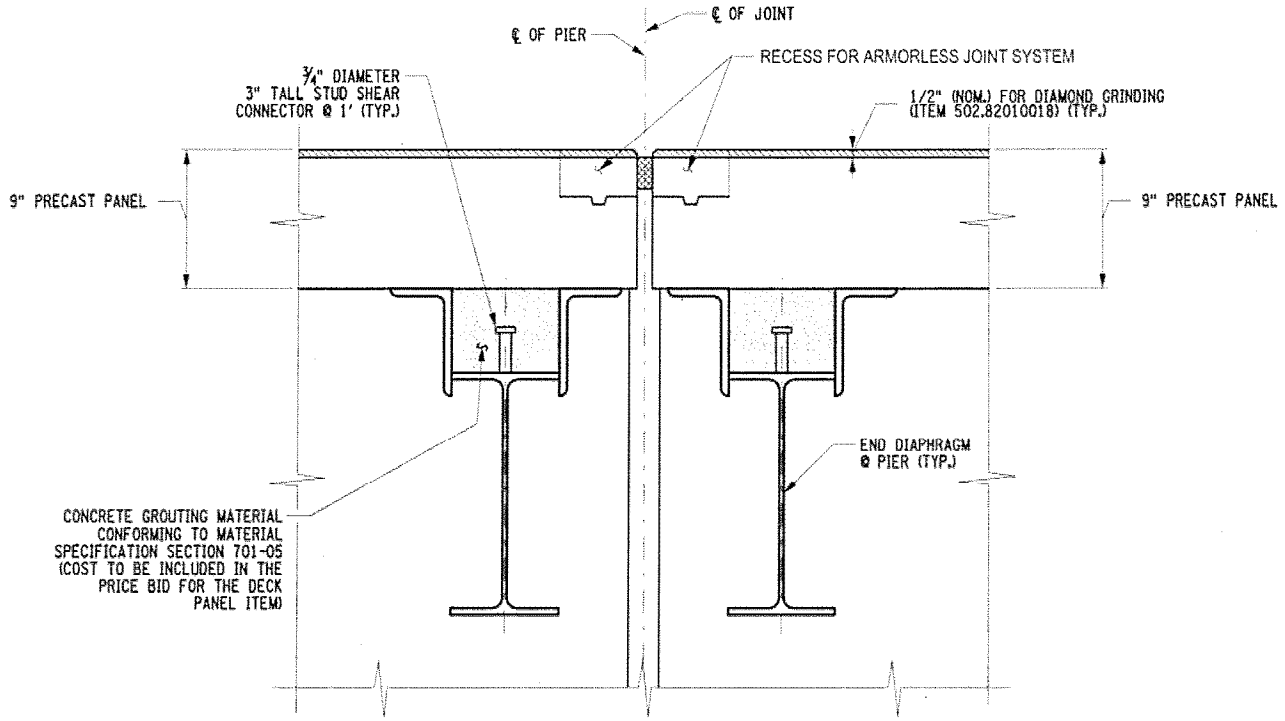

ARMORLESS JOINT OVER PIER

PRECAST CONCRETE DETAILS

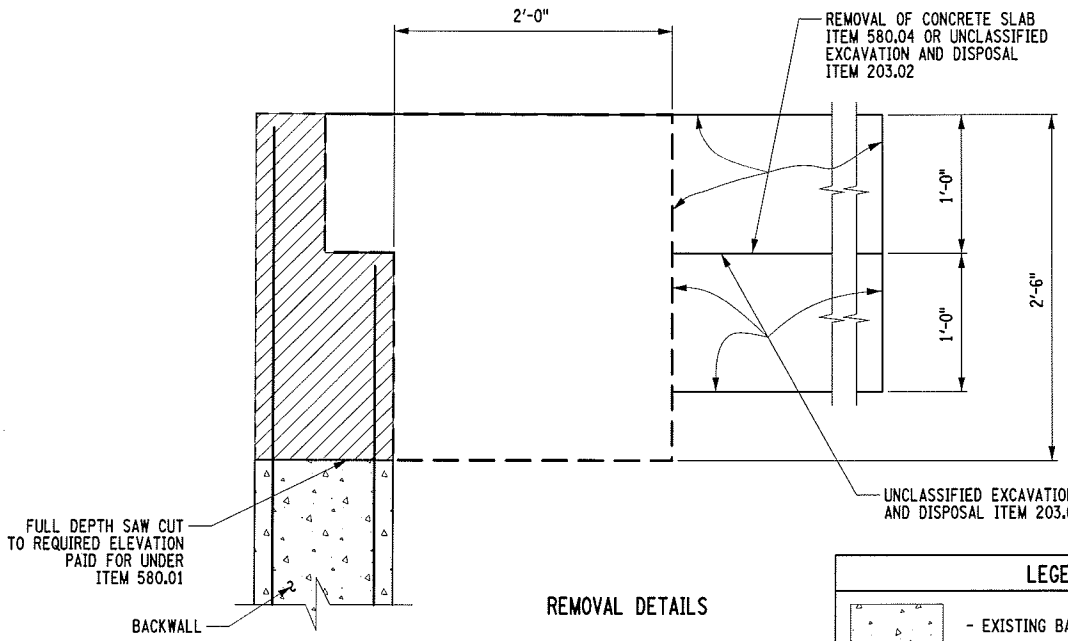

REMOVAL DETAILS

LEGEND

- EXISTING BACKWALL
- AREAS ENCLOSED WITHIN THESE LINES DESIGNATES PAY LIMITS FOR STRUCTURE EXCAVATION ITEM 206.01
- SELECT STRUCTURE FILL ITEM (203.21) COMPACTED TO 95% OF STANDARD PROCTOR MAXIMUM DENSITY
- SUBBASE COURSE (ITEM 304.12)
- REMOVAL OF STRUCTURAL CONCRETE (ITEM 580.01)

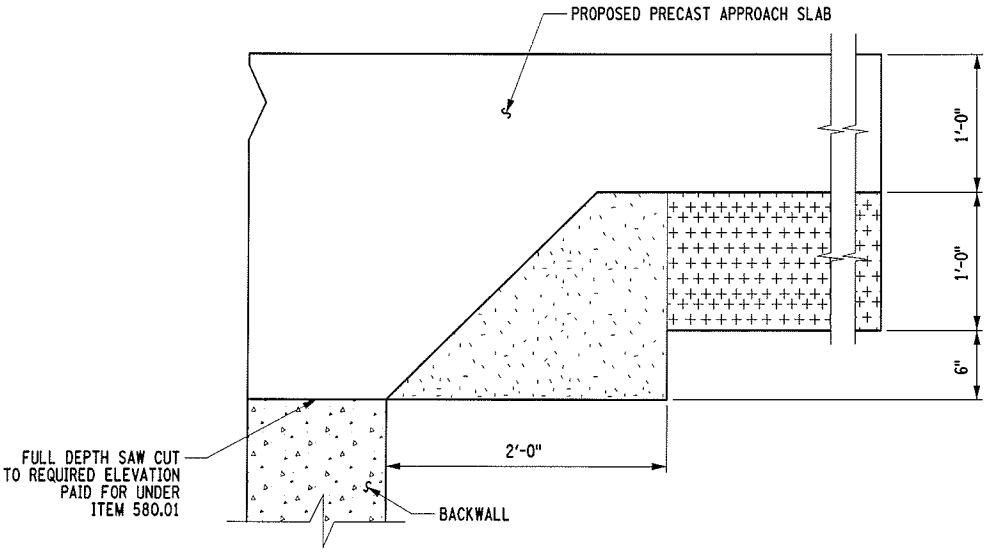

EARTHWORK DETAILS

NOTE:

SEE BACKWALL JOINT DETAILS FOR TOP OF BACKWALL TREATMENT AND EXPANSION CLOSED CELL FOAM DETAILS

PRECAST CONCRETE DETAILS

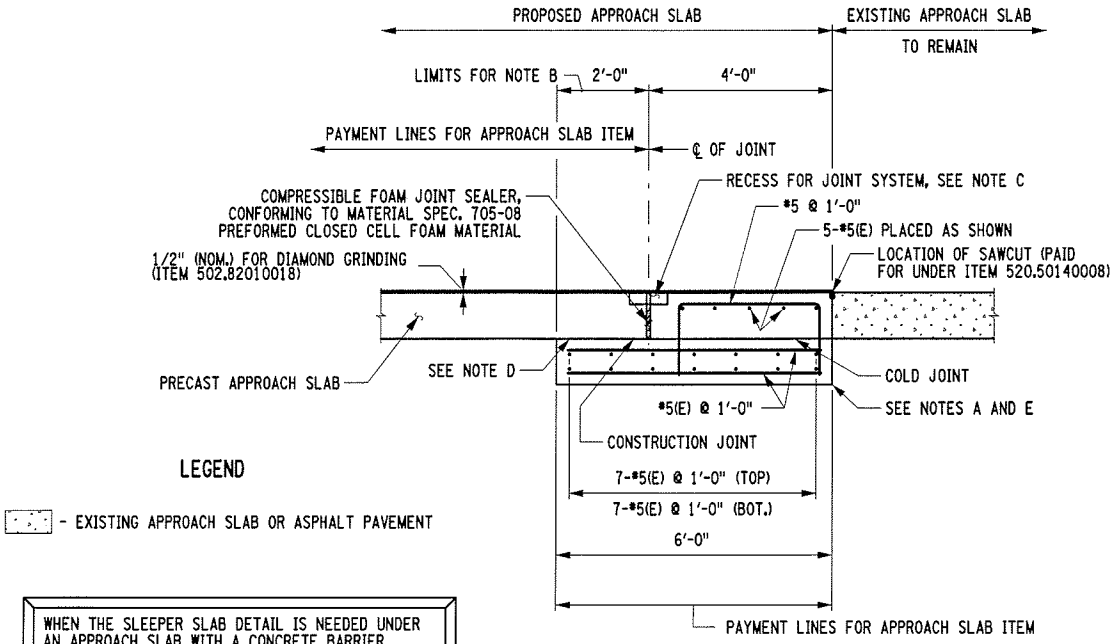

WHEN THE SLEEPER SLAB DETAIL IS NEEDED UNDER AN APPROACH SLAB WITH A CONCRETE BARRIER ATTACHED TO IT, THE SLEEPER SLAB SHALL BE FROM FACE OF BARRIER TO FACE OF BARRIER.

PRECAST SLEEPER SLAB DETAIL

NOTES:

A. EXCAVATION FOR SLEEPER SLABS SHALL BE CAREFULLY MADE AFTER COMPACTED ABUTMENT EMBANKMENT IS IN PLACE. THE SLEEPER SLABS SHALL BE FOUNDED ON UNDISTURBED COMPACT MATERIAL OR RE-COMPACTED MATERIAL. NO LOOSE BACKFILL SHALL BE ALLOWED. THE CONTRACTOR SHALL TAKE ALL NECESSARY PRECAUTIONS TO PROTECT THE SLEEPER SLAB FROM TEMPORARY LOADINGS OR ANY CONDITION WHICH COULD CAUSE MOVEMENTS OR UNEVEN SETTLEMENT OF THE SLEEPER SLAB.

B. TOP OF SLEEPER SLABS SHALL BE STEEL TROWEL FINISHED AND COATED WITH A 0.04 in. NOMINAL THICKNESS OF PERFORMANCE GRADE ASPHALT AS INDICATED IN THE PROPOSAL, OR MATERIAL SPECIFICATION 702-3101. THE TOP OF SLEEPER SLABS SHALL FOLLOW THE CROSS SLOPE AND GRADE OF ROADWAY. COST TO BE INCLUDED IN THE UNIT PRICE BID FOR THE APPROACH SLAB ITEM.

C. IF A MODULAR JOINT SYSTEM IS USED, CONCRETE FURNISHED AND PLACED IN THE RECESSES FOR INSTALLING THE JOINT SYSTEM SHALL COMPLY WITH THE SPECIFICATIONS FOR THE APPROACH SLAB ITEM, EXCEPT THAT MACHINE FINISHING WILL NOT BE REQUIRED. NO ADDITIONAL PAYMENT WILL BE MADE FOR FURNISHING AND PLACING THIS CONCRETE AS THIS QUANTITY LIES WITHIN THE LIMITS OF THE AREA TO BE PAID FOR UNDER THE APPROACH SLAB ITEM. IF AN ARMORLESS JOINT IS USED, PAYMENT FOR THE ELASTOMERIC CONCRETE HEADERS SHALL BE INCLUDED IN THE ITEM FOR THE JOINT SYSTEM. THE JOINT SYSTEM SHALL BE PAID FOR UNDER ITS APPROPRIATE ITEM.

D. COMPRESSED SYNTHETIC SHEET GASKET, MATERIAL SPECIFICATION 728-06 (TWO 1/16" THICK SHEETS. TREATED BOTH SIDES) SHALL BE PLACED WITH PRECAST UNITS. SHIM AND GROUT AS CALLED FOR ON THE BACKWALL DETAILS. PRICE WILL BE INCLUDED IN THE UNIT PRICE BID FOR THE APPROACH SLAB ITEM.

E. PAYMENT FOR SLEEPER SLAB EXCAVATION SHALL BE INCLUDED IN THE APPROACH SLAB ITEM.

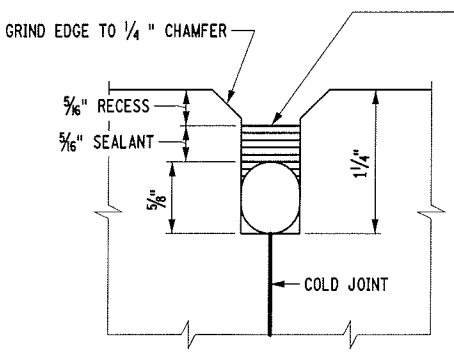

FILL THE RECESS WITH A STRUCTURAL JOINT MATERIAL, SILICONE SEALANT, FROM THE DEPARTMENT'S APPROVED LIST FOR ITEM 567.51--16. IF THE RECESS IS SAW CUT, WATER BLAST IMMEDIATELY FOLLOWING CUTTING TO REMOVE ANY RESIDUAL SLURRY BEFORE IT DRIES. CLEAN THE VERTICAL FACES OF THE RECESS BY ABRASIVE BLAST AND AIR BLOW THE RESIDUE FROM THE RECESS. PRIME THE VERTICAL FACES WITH THE MANUFACTURER'S RECOMMENDED PRIMER, AND ALLOW TO DRY. PLACE A 5/8" DIA. SOFT CLOSED CELL BACKER ROD IN THE BOTTOM OF RECESS. POUR THE SILICONE SEALANT TO A DEPTH OF APPROX. 5/16". PAYMENT TO BE INCLUDED IN THE UNIT PRICE BID FOR THE APPROACH SLAB.

JOINT RECESS DETAIL

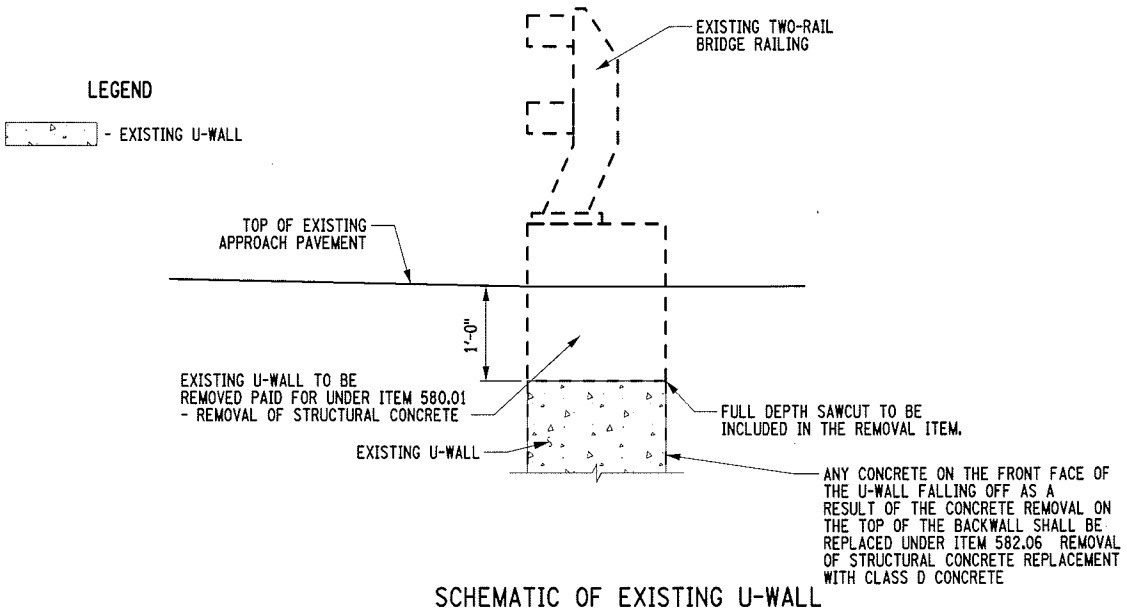

SCHEMATIC OF EXISTING U-WALL

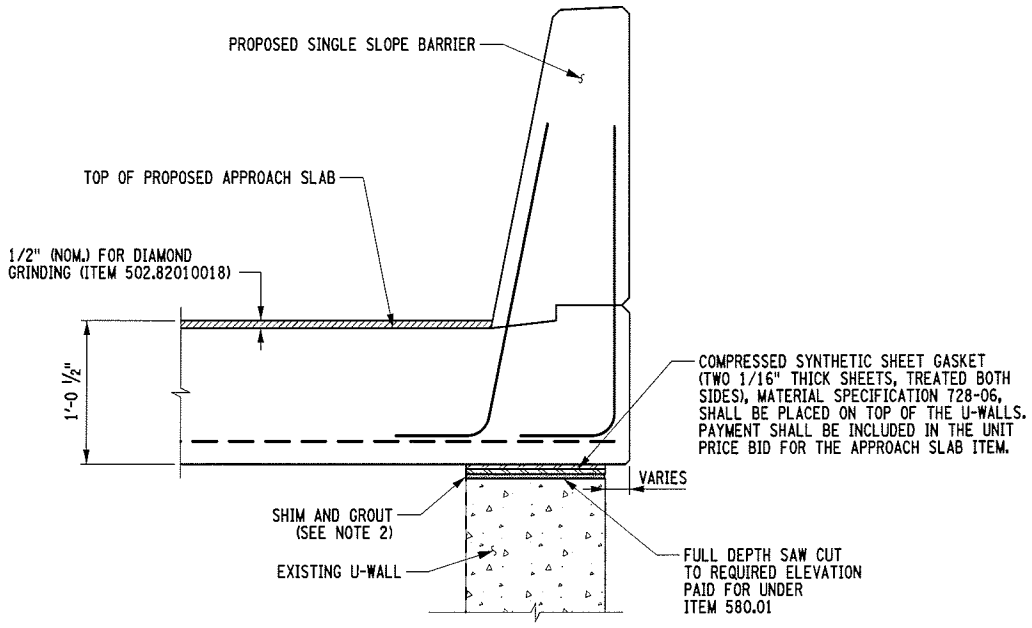

PROPOSED PRECAST APPROACH SLAB ON EXISTING U-WALL

NOTES:

1. ALL APPROACH SLAB AND BARRIER REINFORCEMENT NOT SHOWN FOR CLARITY.

2. CONCRETE GROUTING MATERIAL SHALL CONFORM TO MATERIAL SPECIFICATION SECTION 701-06. COST SHALL BE INCLUDED IN PRICE BID FOR THE DECK PANEL ITEM.

3. FOR SINGLE SLOPECONCRETE BARRIER DETAILS, SEE BD'S RC-11E, RC-12E & RC-13E AND ALL APPROPRIATE BD'S.

PARSONS

100 Broadway
New York, NY 10005
Phone: 212-266-8300
Fax: 212-571-6825
www.parsons.com

TECHNICAL MEMORANDUM

FROM: Kian Siang Chau, P.E
NYSPE 082744

DATE: JUNE 4, 2014

RE: SEISMIC SCREENING SUMMARY
NEW YORK STATE DEPARTMENT OF TRANSPORTATION
D031085; PIN 3501.60; I-81

BIN: 1031529 (I-81/ E Calthrop Av)

This memorandum summarizes the seismic screening conducted for BIN 1031529 as part of the Interstate 81 Project in Syracuse, NY. The purpose of the screening is to determine if seismic retrofits are warranted at the superstructure to substructure connection, and if further seismic evaluation of the structure is required. This memorandum will give the screening results, retrofits required and recommendations for further seismic evaluation of the structure.

SCREENING PROCEDURE

The seismic screening was performed in accordance with the FHWA Seismic Retrofitting Manual for Highway Structures: Part 1 - Bridges, January 2006. As per the referenced manual, seismic screenings were performed for both lower level and upper level earthquake ground motion. The lower level earthquake ground motion has a reasonable likelihood of occurrence within the life of the bridge (50% probability of exceedance within a 75 year bridge life). The upper level earthquake ground motion has a finite likelihood of occurrence within the life of the bridge (7% probability of exceedance within a 75 year bridge life).

Values for the spectral acceleration for the Syracuse area used in the screening are as follows:

- Lower Level Earthquake Ground Motion for a Short Period (0.2 seconds): $S_S = 0.0251$
- Lower Level Earthquake Ground Motion for a Long Period (1.0 seconds): $S_1 = 0.0076$
- Upper Level Earthquake Ground Motion for a Short Period (0.2 seconds): $S_S = 0.139$
- Upper Level Earthquake Ground Motion for a Long Period (1.0 seconds): $S_1 = 0.047$

These values are considered constant and are the same for all seismic screenings of bridges in the Syracuse area.

The Site Class is based on the soil conditions at the bridge location. It was determined that this parameter has little effect on the results of the seismic screening because the spectral acceleration values for the Syracuse area are small. Based on this, a site class of D was used for all seismic screenings of bridges in the Syracuse area.

Bridge parameters used in the seismic screening were retrieved from the record drawings and WinBolts data.

The seismic screening takes into account the anticipated service life, importance, and the seismic exposure of the bridge to determine a seismic retrofit category (SRC). The SRC is then used to determine seismic evaluation methods and retrofit measures. There are four SRCs, A through D. Seismic retrofit category A is the lowest category; bridges in this category do not require retrofits or further seismic evaluation. Seismic retrofit category D is the highest category; bridges in this category requiring the most rigorous seismic evaluations and retrofits.

SCREENING RESULTS

The SRC for the bridge is "**C**" for lower level earthquake ground motion and "**B**" for upper level earthquake ground motion.

RETROFITS REQUIRED

No seismic retrofits are required for the bridge superstructure to substructure connection.

RECOMMENDATIONS FOR FURTHER SEISMIC EVALUATION

For the lower level earthquake ground motion, it is recommended that capacity/demand ratios for bridge components are calculated as per Section 5.4 of the referenced manual. For the upper level earthquake ground motion, it is recommended that the capacities of the bearings are checked as per Section 5.2 of the referenced manual.

Retrofit cost estimates will be provided after any further required seismic evaluations are completed.

PARSONS

100 Broadway
New York, NY 10005
Phone: 212-266-8300
Fax: 212-571-6825
www.parsons.com

TECHNICAL MEMORANDUM

FROM: Kian Siang Chau, P.E
NYSPE 082744

DATE: JULY 1, 2014

RE: FATIGUE EVALUATION
NEW YORK STATE DEPARTMENT OF TRANSPORTATION
D031085; PIN 3501.60; I-81

BIN: 1031529 (I-81 / E Calthrop Ave.)

This memorandum documents a fatigue evaluation conducted for the existing Interstate 81 Viaduct Project. Existing structures with AASHTO Category D, E, and E' fatigue-prone details require 100% hands-on inspection unless proven to be exempt. The purpose of the evaluation is to assess the remaining life of fatigue-prone components.

EVALUATION PROCEDURES

The fatigue evaluation was performed in accordance with the AASHTO Guide Specification for Fatigue Evaluations of Existing Steel Bridges, 1990. Fatigue-prone welds identified in the biennial inspection reports were located on record drawings and confirmed visually in the field. Additional information concerning fatigue-prone welds located in BIN folders was also obtained and reviewed prior to inspection.

EVALUATION RESULTS

The results of the fatigue evaluation of the existing bridge are shown below. The remaining safe fatigue life of the fatigue components have been **exhausted**.

Fatigue Detail Location	Remaining Safe Fatigue Life (Years)	Remaining Mean Fatigue Life (Years)
Interior Girders, End of Bottom Flange Cover Plate	-13.33	74.14
Exterior Girders, End of Bottom Flange Cover Plate	10.88	193.26

IN-DEPTH INSPECTION REPORT

D031085 P.I.N. 3501.60

ELEMENT SPECIFIC BRIDGE WORK

B.I.N. 3/3 1031549

TEAM LEADER George H Stam, P.E. 056216
NYSPE LICENSE #

ASSISTANT TEAM LEADER Timothy Olmstead

FEATURE CARRIED I-81

FEATURE CROSSED East Colvin Street

DATE FIELD WORK BEGAN 4/1/14

DATE FIELD WORK COMPLETED 4/1/14

TABLE OF CONTENTS

- STRUCTURE IDENTIFICATION
- INTRODUCTION
- PROJECT LOCATION MAP
- IN-DEPTH CONDITION DOCUMENTATION
- PLANS & SKETCHES
- IN-DEPTH PHOTO DOCUMENTATION
- ASBESTOS SAMPLING SURVEY
- LATEST BIENNIAL INSPECTION REPORT

STRUCTURE IDENTIFICATION

a. Bridge Identification Number (BIN):	3/3 1031549
b. Reference Marker:	81I 3303 2028
c. Region:	NYSDOT Region 3
d. County:	Onondaga
e. City:	Syracuse
f. Feature Carried:	I-81
g. Feature Crossed:	East Colvin Street
h. Orientation:	North

INTRODUCTION

a. Bridge History

i. Year Built:	1965
ii. Bridge Type:	Single Span, Steel Multi-girder
iii. Span Length:	61
iv. Out-to-Out Width:	110.5 feet
v. Skew Angle:	1°
vi. Structural Ratings and Rankings	
1. Federal Sufficiency:	86.6 (Sep. 2013)
2. Condition Rating:	5.0 (Sep. 2013)
3. General Recommendation:	5 (Sep. 2013)
vii. Live Load Posting (HS25):	No
viii. National Highway System (NHS):	Yes
ix. Previous work Done:	1979 – Box beam guide railings on approaches 1985 – Clean and paint metal surfaces 1985 – Concrete overlay 1990 – Concrete overlay NB side 1998 – Asbestos testing 2008 – Concrete substructure repairs and bearing restoration 2011 – Clean and repair joints
x. Planned Future Work:	N/A

b. Highway Classification

i. Functional Classification: Urban Principle Arterial - Interstate

ii. Traffic Volumes

YEAR	AADT
2014	59138
2034	87876
2054	130579

PROJECT LOCATION MAP



IN-DEPTH CONDITION DOCUMENTATION

NYS DEPT. OF TRANSPORTATION **SHEET: 1 OF 4**
BRIDGE INSPECTION REPORT **BIN: 1031549** **DATE: 4/1/2014**

FEATURE CARRIED: I-81 **TEAM LEADER: G. STAM & A. THOMPSON**
FEATURE CROSSED: EAST COLVIN STREET **ASSIST.TEAM LEADER: T. OLMSTEAD & M. SAVINO**

ITEM	REMARKS	PHOTO NO.
	GENERAL NOTE The bridge structural deck was rated "4" in the 2013 Biennial Inspection, therefore, the deck is not in scope of this In-depth Inspection. The inspection of remaining topside elements performed by A. Thompson & M. Savino. The underside inspection performed by G. Stam & T. Olmstead.	
	BEGIN ABUTMENT ITEMS	
TP 349-22	Begin Abutment - Joint with Deck: There is a 10' length in the NB center and right lanes that has a previously repaired begin joint header which cracked and spalled along the end (Photo 1). The spalling is up to 5" wide and 1" deep, and the cracking is hairline. This causes impact from vehicles. There is a 1' length of foam joint filler missing to the left of the repaired header. The remainder of the NB joint is in good condition. The SB begin header has settled 1" max. at the centerline of travel way causing impact from vehicles (Photo 2). There is also a ½" gap and elevation difference between the begin header and begin approach pavement. There is no joint visible below deck.	1,2
TP 349-24	Begin Abutment – Bearings: The begin bearings are expansion. The left fascia bearing B1 (Photo 3) and bearing B9 (Photo 4) have cracked and peeling paint; and are rusted. The remaining bearings are in better condition (Photo 5). All the bearings are in their normal slightly contracted position at 45 ºF. All the bearings show evidence of movement and appear to be functioning normally.	3,4,5
TP 349-26	Begin Abutment - Seat and Pedestals: The seats are in good condition with no significant cracks or hollow sounding areas detected. Pedestals P7, P8, & P13 have small areas of hollowness at the top middle of the front face (Photo 6). Pedestals P9 & P16 have vertical hairline cracks in the front face. The remainder of the pedestals are in good condition with no significant cracks or hollow areas noted. See the Begin Abutment Deterioration Sketch.	6
TP 349-28	Begin Abutment – Backwall: There are areas of tight mapcracking covering 50% of the surface area of the backwall. The worst areas are the fascia bays, bays 1 & 2 and the median bay between girders G8 and G9 (Photos 7, 8, & 9). The deteriorated areas are illustrated on the Begin Abutment Deterioration Sketch. The significant areas are noted below:	7,8,9
	• Top left fascia bay - spalled 18 inches wide x 10 inches high x 2 inches deep with exposed rusted reinforcement that is mostly bonded (Photo 7). The remainder of the bay is cracked with seepage and heavy efflorescence.	7
	• Bay 1 – 3 square feet area of hollow sounding concrete; a 6 inches diameter x 2 inches deep spall with an exposed rusted reinforcement bar; horizontal cracking along the top of the bay with staining; and a full height vertical crack with efflorescence (Photo 10).	10
	• Bay 2 – horizontal cracking along the top with 2 square feet of hollow sounding area; and several vertical hairline cracks with staining and efflorescence (Photo 8).	8
	• Bay 4 – 2 square feet area of hollow sounding, cracked and delaminated concrete with spalling along the edges (Photo 11).	11

ITEM	REMARKS	PHOTO NO.
TP 349-30	Begin Abutment – Stem: The stem has been recently repaired and is in generally good condition. The left side is tight mapcracked in a previously patched area (Photo 12). There are scattered areas of tight mapcracking, and hairline cracks; a hollow area, and a small spall as illustrated on Begin Abutment Deterioration Sketch.	12
	END ABUTMENT ITEMS	
TP 349-23	End Abutment - Joint with Deck: There is a 4' length in the SB center lane that has a previously repaired end joint header (Photo 13). The header is in good condition. There is +/-1/2" of settlement in the left half of the left lane causing impact from vehicles. The foam joint filler is in good condition except for a 2' width at the header repair where it is coming up. There is a 1' dia. x 2" deep pothole in the end approach at the right edge of the center lane adjacent to the header (Photo 14). The end joint in the NB travel way is in good condition. There is no joint visible below deck.	13,14
TP 349-25	End Abutment – Bearings: The end bearings are fixed. The fascia bearings G1 & G16 are rusted (Photos 15 & 16). The interior bearings are in better condition except bearing B9 adjacent to the median in the structure which allows leakage onto the bearing B9 below (Photo 17).	15,16,17
TP 349-27	End Abutment - Seats and Pedestals: The seats are in good condition with no significant cracks or hollow areas detected. Pedestal P1 is damp and there is a hairline crack on the right side (Photo 18). Pedestals P3 & P4 have cracks with staining on the front faces and the right sides (Photos 19 & 20). The remainder of the pedestals are in good condition with no significant cracks or hollow areas detected.	18,19,20
TP 349-29	End Abutment – Backwall: There are areas of hairline mapcracking covering 50% of the surface area of the backwall. The worst areas are the left fascia bay, bay 1, bay 7, and the right fascia bay (Photos 18, 21, & 22). At the top of the left fascia bay, there is a 6 inches wide x 1 foot high x 4 inches deep spall (Photo 23). There is crumbly concrete and a 0.5 square foot area of hollow sounding concrete surrounding the spall with seepage and heavy efflorescence down the backwall. In bay 8, on the right side, there is cracking with heavy staining; and on the left side, at the top, there is a 6 inches wide x 6 inches high x 2 inches deep spall with damp crumbly concrete; and seepage with heavy efflorescence down the backwall (Photo 24). In bay 12, there is a vertical hairline crack with efflorescence (Photo 25). See the End Abutment Deterioration Sketch.	18,21,22 23,24,25
TP 349-31	End Abutment – Stem: The stem has a patchwork of various vintages of repairs. Toward the right side, there is an area of tight mapcracking of a patched area (Photo 26). Beneath girder bay 2, there is cracking, shallow surface scaling and several hollow sounding areas (Photo 27). At mid-span, there is full height vertical cracking with staining and a 5.5 square foot area of hollow sounding concrete (Photo 28). There are scattered cracks and hollow areas as illustrated on the End Abutment Deterioration Sketch.	26,27,28

ITEM	REMARKS	PHOTO NO.
	APPROACH ITEMS No approach item deficiencies are noted.	
	DECK ITEMS	
TP 350-19	Deck - Wearing Surface: The ride on the deck is smooth.	
TP 350-20	Deck – Curbs: The granite curbs at the left and right are in good condition. There are no curbs at the median.	
TP 350-21	Deck - Sidewalks and Fascias: Sidewalks – The bridge does not have sidewalks.	
	Fascias – The left fascia has tight map cracking over 10% of the surface, primarily beneath the railing posts; and scattered staining spots (Photo 29). Also, there are scattered vertical hairline cracks (Photo 30). The right fascia has light scattering of tight mapcracking.	29,30
TP 350-22	Deck - Railings: The bridge has concrete parapets with steel railings on top at the left and right and jersey barrier along the center. The end left bolt at the second railing post from the end on the left side railing is sheared off (Photo 31). The remainder of the railings are in good condition. The left parapet is map cracked for its entire length (Photo 32). The right parapet has several sections that have been replaced totaling about 1/3 of the total length (Photo 33). The replaced sections are in good condition. The original sections are map cracked throughout. The center jersey barrier has map cracking on both faces (Photo 34).	31,32,33 34
	SUPERSTRUCTURE ITEMS	
TP 350-27	Structural Deck: The structural deck was not included in this inspection.	
TP 350-28	Primary Members: There is localized corrosion at the end left side of girder G1 above the bearing. Caliper measurements taken over a 1.75 inches wide x 1 inch high area of the web above the rear portion of the bearing shows a 42% section loss (Photo 35 & 15). There is similar, but less severe, localized corrosion at the end right side of girder G16 (Photo 16). The remaining primary members are in good condition with only surface rusting where the paint has blistered or peeled (Photo 36). No other significant section losses were noted.	15,16,35 36
	There are utility support angles welded to the top of the bottom flanges of all girders except girder G16. Broken welds were noted at the begin angle at the right side of G1 (Photos 37 & 38); and the end angle at the right side of girder G3 (Photos 39 & 40). The welds are completely broken and no cracks into the primary member base metal were detected.	37,38 39,40
TP 350-29	Secondary Members: The secondary members (diaphragms) are in good condition with only surface rusting where the paint has blistered or peeled. No significant section loss was noted.	

ITEM	REMARKS	PHOTO NO.
TP 350-30	Paint: The paint system is failed on approximately 5% of the surfaces of the girders and diaphragms (Photo 36). There is cracking and peeling of the paint on the bottom flanges (Photos 41 & 42). There is surface rusting where the paint has peeled or blistered. The webs of the left side of girder 9 and the outside of right fascia girder G16 have scattered freckling, blistering and peeling paint (Photo 42 & 43). The remaining paint is faded and chalky. **UTILITIES ITEMS**	36,41,42 43
TP 350-43	Lighting: The light pole for I81 is in good condition (Photo 44).	44
TP 350-44	Sign Structure: None.	
TP 350-45	Utilities and Support: There are lighting utility conduits attached to the outside of both parapets (Photos 29 & 45). **SPECIAL EMPHASIS ITEMS** Special Emphasis Inspection Required · Non-Redundant/Fracture Critical Members – No · Pin and Hangers – No · Fatigue-Prone Welds – Yes · Non-Categorized Fatigue-Prone Details – No · Other – Yes. Specified below. Special Emphasis Details · Partial length cover plates on girders G2 thru G8 and G10 thru G15. · Lighting junction box support angles welded to the web of girder G1 in a tension zone below the neutral axis. · Utility support welded connections to bottom flanges of girders. G1 thru G15.	29,45

PLANS & SKETCHES

FED. RD. REG. NO.	STATE	FEDERAL AID PROJECT NO.	SHEET NO.
1	NEW YORK	I-81-2(80)	247

INTERSTATE ROUTE 505
SYRACUSE CITY LINE TO SIZER STREET

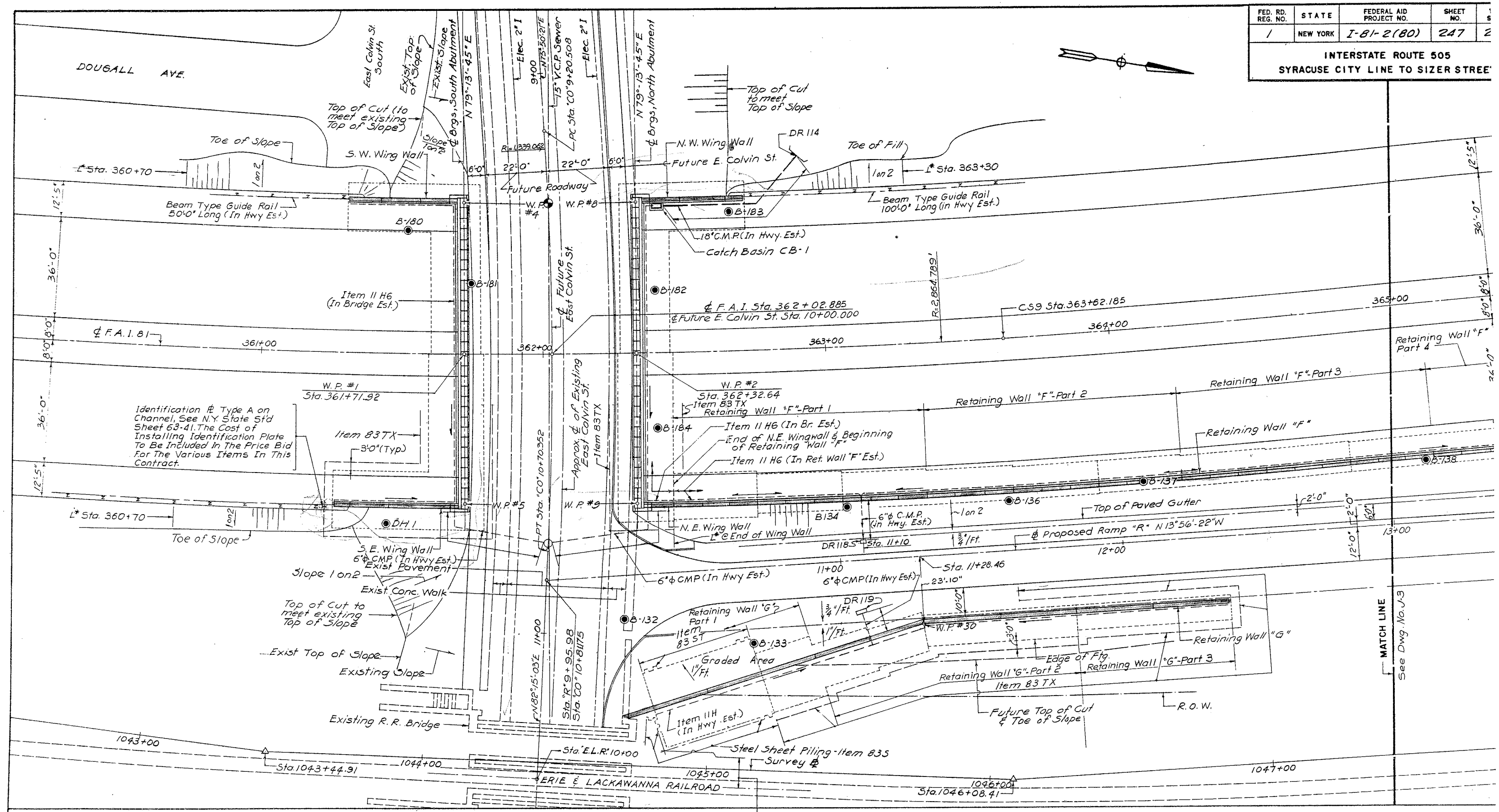

DR Denotes Drainage Structure
L* Denotes Limits of Items 121 & 123 In Bridge Estimate

◉ Location of Boring
⊕ Point of Min. Vertical Clearance

GRADING AND LAYOUT PLAN — PART I

SCALE: 1/16" = 1'-0"

NOTES:
1. GRADING AND LAYOUT PLAN SHOWN WITH BRIDGE SUPERSTRUCTURE REMOVED.
2. SEE HIGHWAY PLANS FOR ADDITIONAL DRAINAGE INFORMATION.

PREPARED AND RECOMMENDED BY LEONARD S. WEGMAN CO.
BY [signature]
N.Y.S. P.E. LIC. 23287 DATE 12-9-63

F.A.I. 81 OVER EAST COLVIN STREET
GRADING AND LAYOUT PLAN PART I

DRAWN BY: H.L.	CHECKED BY: F.G. [signature]	LEONARD S. WEGMAN CO. ENGINEERS 235 EAST 45TH STREET, NEW YORK 17, N.Y.	SCALE AS NOTED
REVIEWED BY: [signature]	DATE 12-9-63		DWG. NO. J

1031544

F.I.C. 64-7

FED. RD. REG. NO.	STATE	FEDERAL AID PROJECT NO.	SHI NO.
1	NEW YORK	I-81-2(80)	24

INTERSTATE ROUTE 505
SYRACUSE CITY LINE TO SIZER

NOTE: EACH CONDUIT PASSING THROUGH AN EXPANSION JOINT SHALL BE PROVIDED WITH AN EXPANSION FITTING. THE EXPANSION FITTING DETAIL IS SHOWN ON DWG. NO LD-1. PAYMENT OF FURNISHING AND INSTALLING EXPANSION FITTINGS SHALL BE INCLUDED IN CONDUIT ITEMS (IN HWY. ESTIMATE).

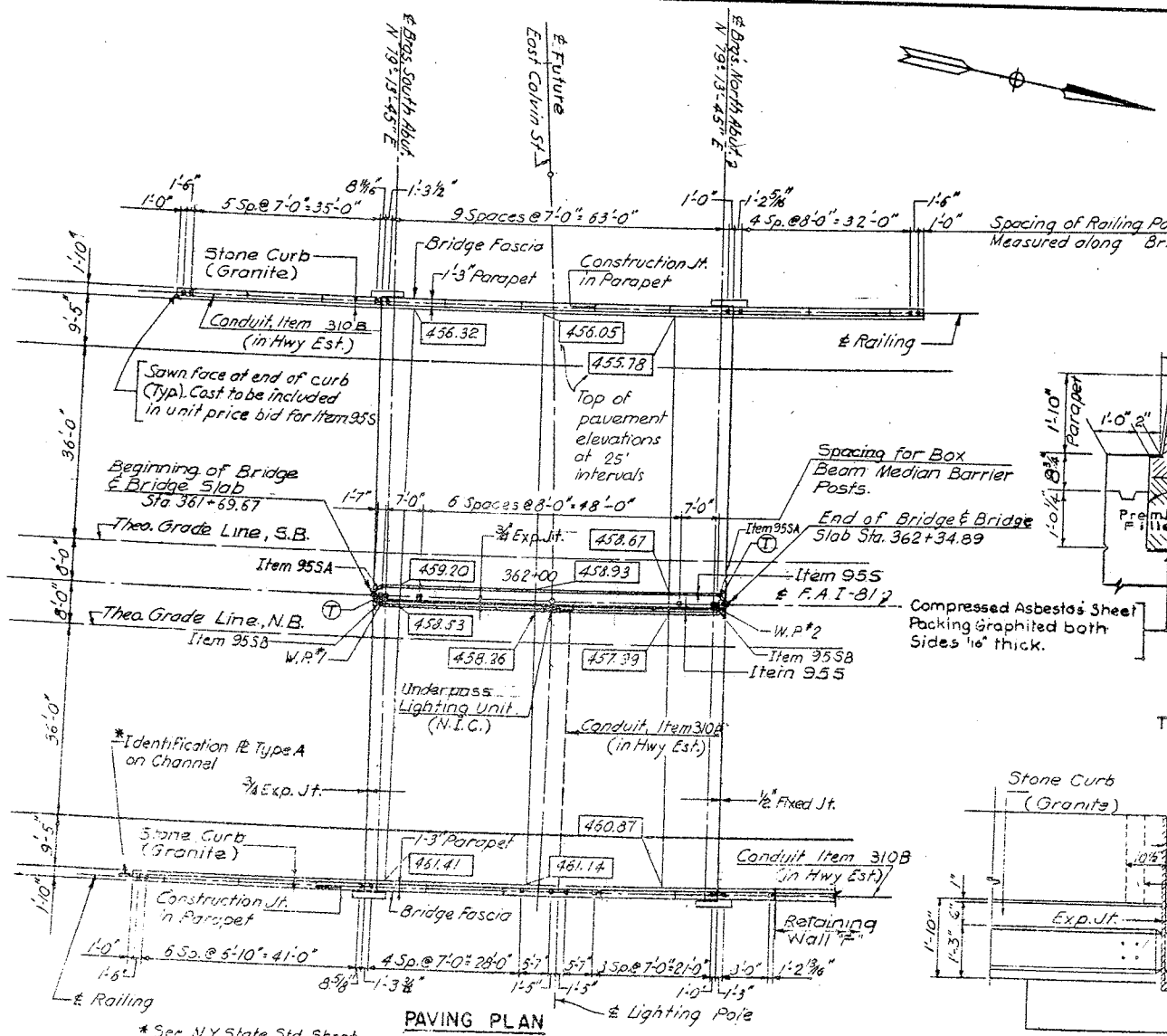

PAVING PLAN
SCALE: 1" = 10'

* See N.Y. State Std. Sheet No. 613-41. The cost of installing identification ℄ to be included in the price bid for the various items in this Contract.

Ⓣ Terminal Post of Box Beam Median Barrier See Dwg. No. J-26 for Details.

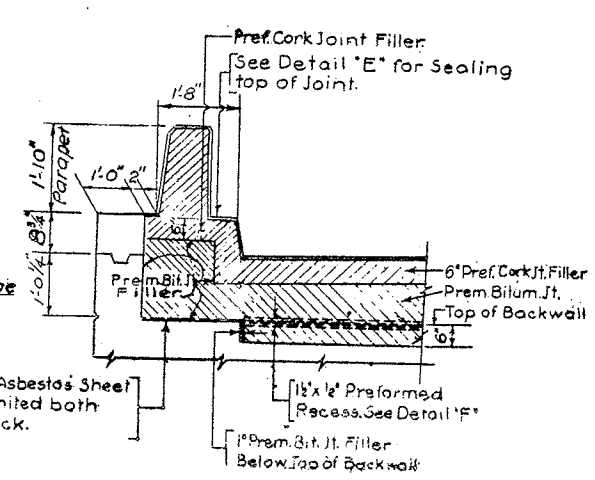

TRANSVERSE SECTION

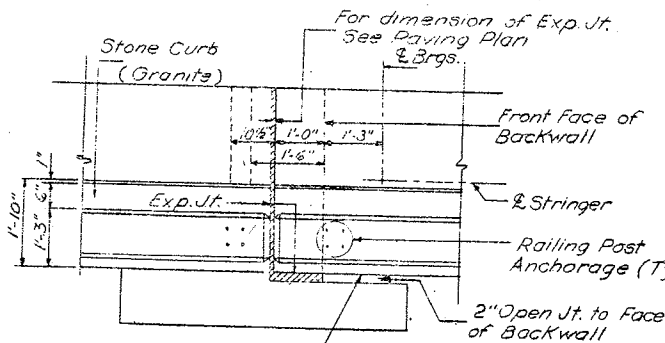

PARTIAL PLAN

EXPANSION JOINT AT ABUTMENT

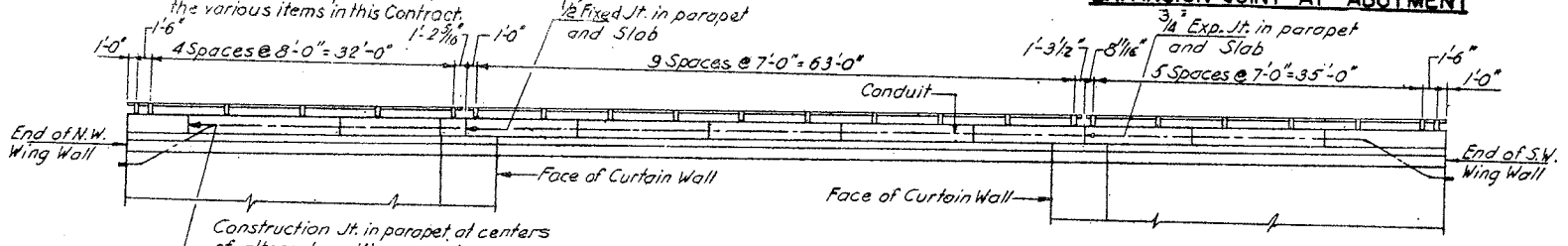

ELEVATION OF WEST RAILING
SCALE 1" = 10'

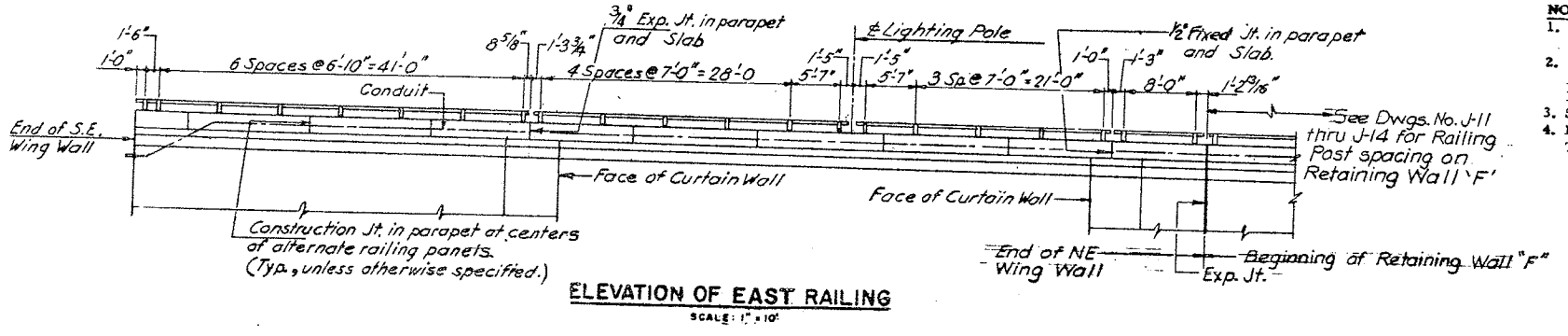

ELEVATION OF EAST RAILING
SCALE: 1" = 10'

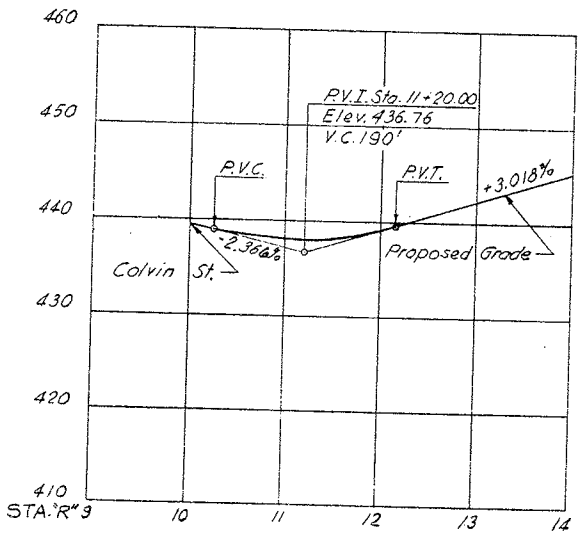

RAMP "R"

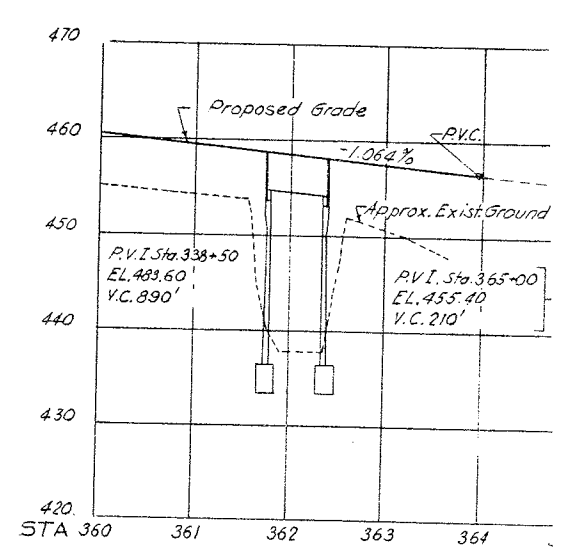

F.A.I. 81 S.B & N.B

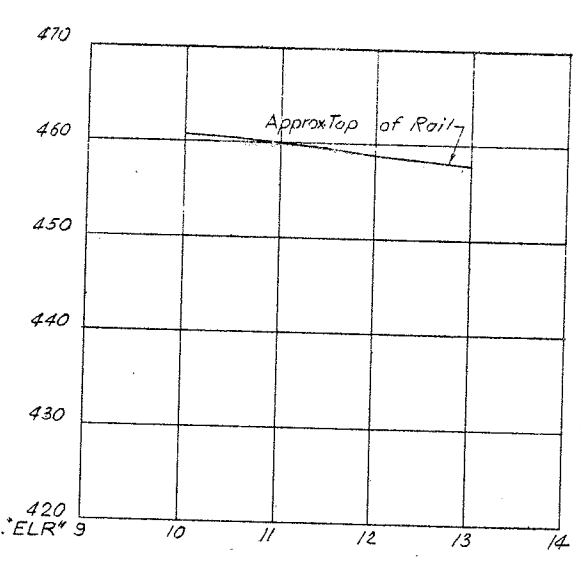

ERIE—LACKAWANNA RAILROAD

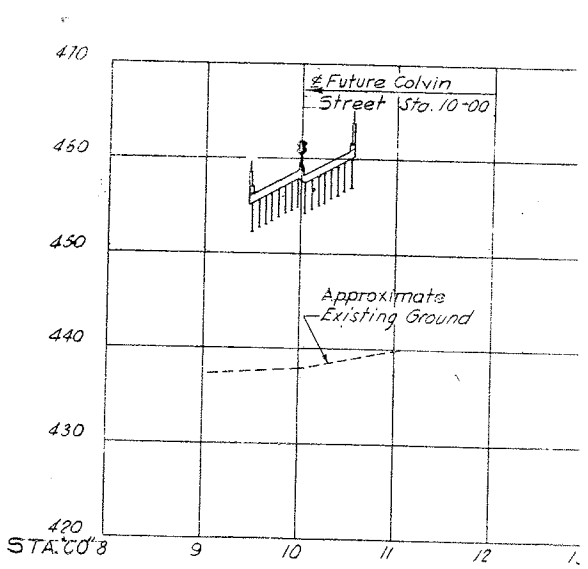

EAST COLVIN STREET

PROFILES
SCALES: VERTICAL 1" = 10' HORIZONTAL 1" = 100'

NOTES:
1. ALL DIMENSIONS SHOWN ON FRAMING PLAN AND RAILING ELEVATIONS ARE HORIZONTAL DIMENSIONS.
2. FOR DETAILS OF CONSTRUCTION JOINTS IN PARAPET AND FOR RAILING, PARAPET AND CURB DETAILS SEE DWG. NO. J-25.
3. SEE DWG. NO. J-19 FOR ADDITIONAL JOINT DETAILS.
4. RAILING POSTS SHALL BE PLACED PERPENDICULAR TO THE TOP OF PARAPET.

PREPARED AND RECOMMENDED BY
LEONARD S. WEGMAN CO.
BY [signature]
N.Y.S. P.E. LIC. 23287 DATE 12-9-63

F.A.I. 81 OVER EAST COLVIN STREET

PAVING PLAN AND PROFILES

DRAWN BY: AK CHECKED BY: EG
REVIEWED BY [signature]

LEONARD S. WEGMAN CO.
ENGINEERS
235 EAST 45TH STREET, NEW YORK

AS M

F.I.C. 64-7

FED. RD. REG. NO.	STATE	FEDERAL AID PROJECT NO.	SHEET NO.	TO SHE
1	NEW YORK	I-81-2(80)	250	28

INTERSTATE ROUTE 505
SYRACUSE CITY LINE TO SIZER STREET

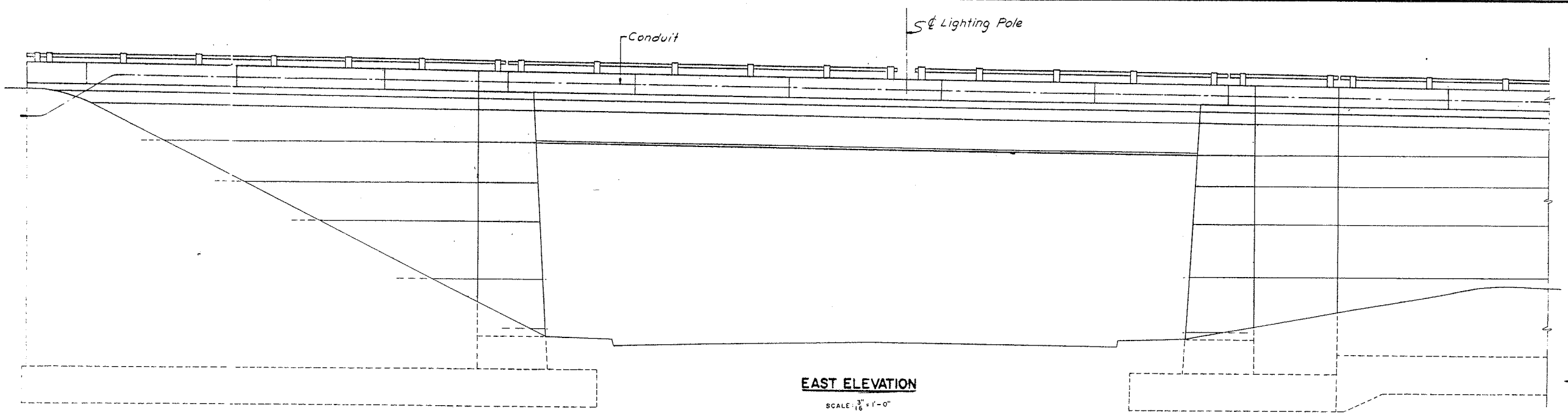

EAST ELEVATION
SCALE: 3/16" = 1'-0"

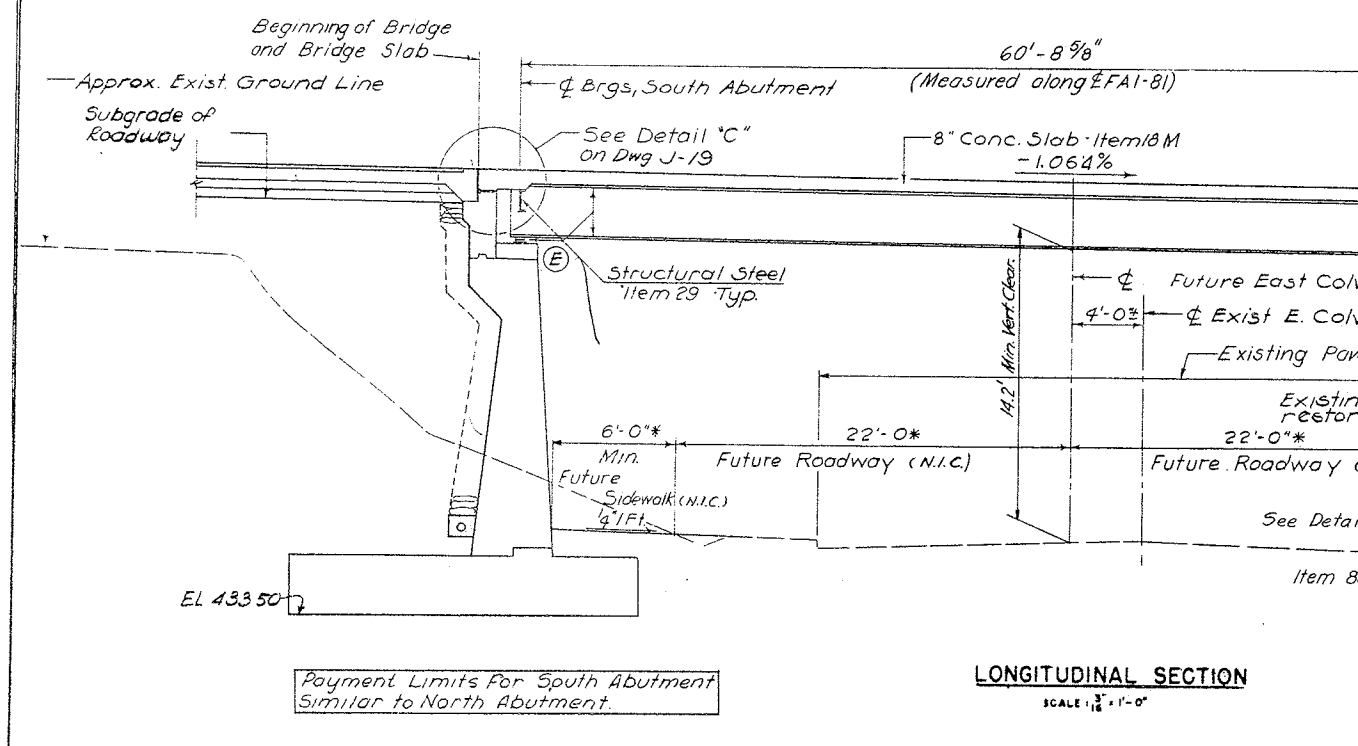

LONGITUDINAL SECTION
SCALE: 3/16" = 1'-0"

Payment Limits For South Abutment Similar to North Abutment.

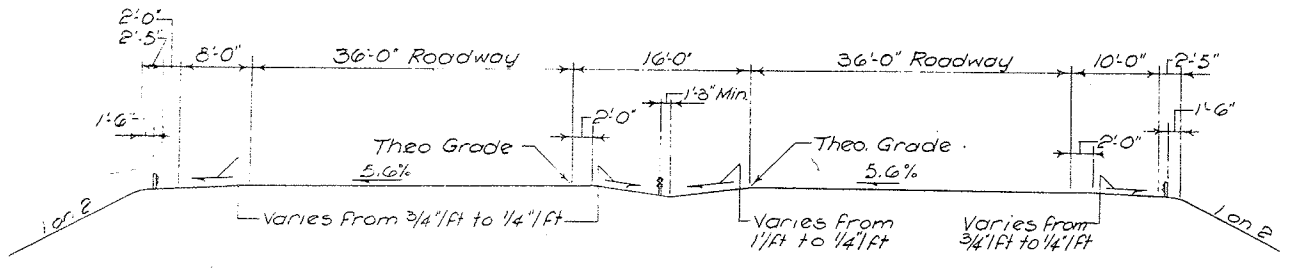

SOUTHERLY APPROACH

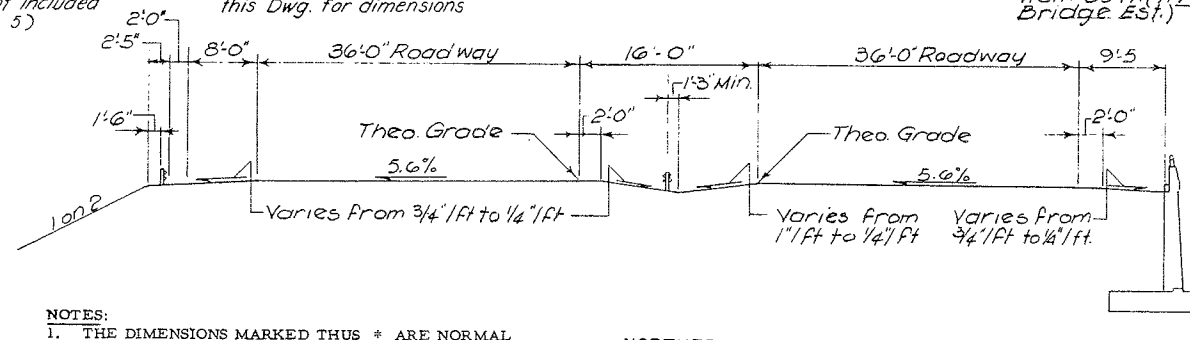

NORTHERLY APPROACH

NOTES:
1. THE DIMENSIONS MARKED THUS * ARE NORMAL DIMENSIONS.
2. INTERMEDIATE DIAPHRAGMS ARE NOT SHOWN.
3. (E) - EXPANSION BEARING
   (F) - FIXED BEARING

APPROACH SECTIONS F.A.I. 81
SCALE: 1/32" = 1'-0"

PAYMENT LIMITS FOR WINGWALLS

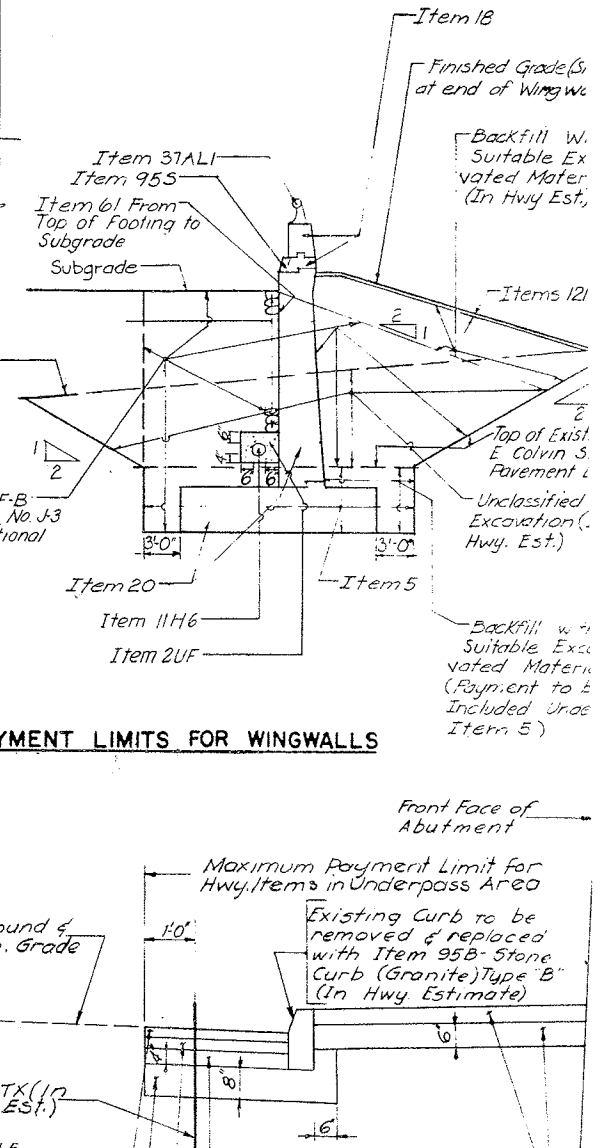

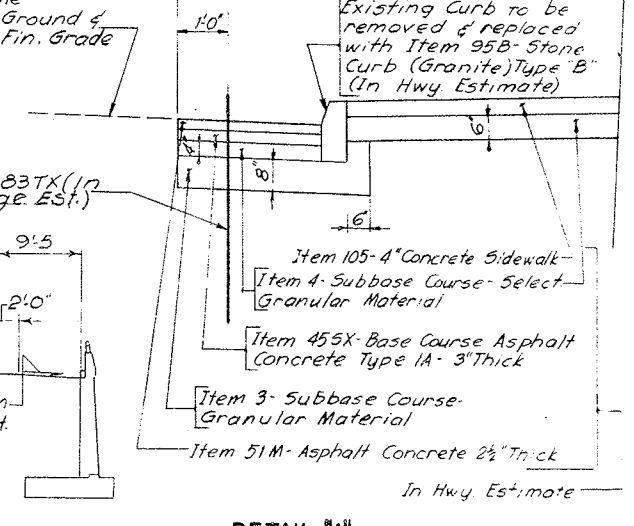

DETAIL "A"

PREPARED AND RECOMMENDED BY
LEONARD S. WEGMAN CO.
BY _____
N.Y.S. P.E. LIC. 23287 DATE 12-9-63

F.A.I. 81 OVER EAST COLVIN STREET
EAST ELEVATION AND LONGITUDINAL SECTION

DRAWN BY: R.S. - A.F.	CHECKED BY: F.G.	LEONARD S. WEGMAN CO. ENGINEERS 235 EAST 45TH STREET, NEW YORK 17, N.Y.	SCALE AS NOTED
REVIEWED BY:	DATE 12-9-63		DWG. NO. J-5

CHARLES FOLEY INC. BROOKLYN 17, N.Y. REPRODUCIBLE NO. 4004

F.I.C. 64-7 1

FED. RD. REG. NO.	STATE	FEDERAL AID PROJECT NO.	SHEET NO.
1	NEW YORK	I-81-2(80)	251

INTERSTATE ROUTE 505
SYRACUSE CITY LINE TO SIZER ST

NOTES:
1. SEE DWG. NO. J-9 FOR SUBSTRUCTURE AND RETAINING WALL NOTES.
2. SEE DWG. NO. J-10 FOR SECTIONS 1-1 THRU 4-4, 7-7 AND 9-9.
3. SEE DWG. NO. J-8 FOR BEARING PEDESTAL DETAILS.
4. ALL REINFORCEMENT SHOWN ON THIS DRAWING WILL BE PAID FOR UNDER ITEM 28, SEE DWG. NO. J-20 FOR BAR SCHEDULE.
5. SEE DWG. NO. J-10 FOR FOOTING REINFORCEMENT.
6. ADDITIONAL PAYMENT ITEMS AND LIMITS FOR ABUTMENTS AND WING WALLS ARE SHOWN ON DWGS. NO. J-2, J-3 & J-5.
7. SEE DWGS. NO. J-4 AND J-25 FOR RAILING POST SPACING AND RAILING DETAILS.
8. SEE DWG. NO. J-19 FOR ADDITIONAL JOINT DETAILS.

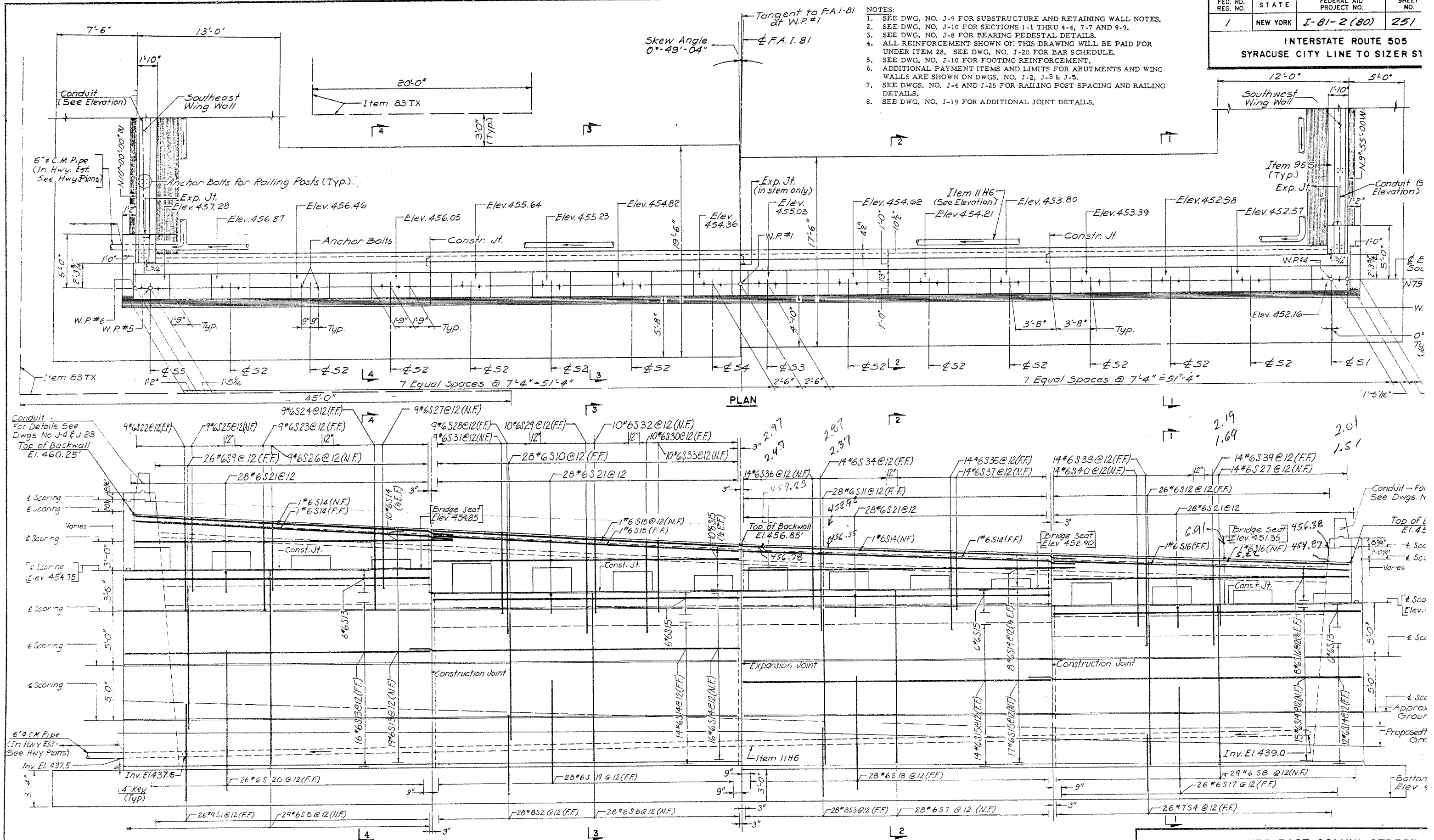

ELEVATION

PREPARED AND RECOMMENDED BY
LEONARD S. WEGMAN CO.
BY _____
N.Y.S. P.E. LIC. 23287 DATE 12-9-63

F.A.I. 81 OVER EAST COLVIN STREET
SOUTH ABUTMENT

DRAWN BY:	CHECKED BY:	LEONARD S. WEGMAN CO. ENGINEERS	SCALE 1"
HL BF	JC RP	235 EAST 45TH STREET, NEW YORK 17, N.Y.	DWG. NO.
REVIEWED BY:	DATE 12-9-63		

F.I.C. 64-7

FED. RD. REG. NO.	STATE	FEDERAL AID PROJECT NO.	SHEET NO.
1	NEW YORK	I-81-2(80)	252

INTERSTATE ROUTE 505
SYRACUSE CITY LINE TO SIZER STRI

NOTES:
1. SEE DWG. NO. J-9 FOR SUBSTRUCTURE AND RETAINING WALL NOTES.
2. SEE DWG. NO. J-10 FOR SECTIONS 1-1 THRU 4-4, 8-8 AND 10-10.
3. SEE DWG. NO. J-8 FOR BEARING PEDESTAL DETAILS.
4. ALL REINFORCEMENT SHOWN ON THIS DRAWING WILL BE PAID FOR UNDER ITEM 28, SEE DWG. NO. J-20 FOR BAR SCHEDULE.
5. SEE DWG. NO. J-10 FOR FOOTING REINFORCEMENT.
6. ADDITIONAL PAYMENT ITEMS AND LIMITS FOR ABUTMENTS AND WING WALLS ARE SHOWN ON DWGS., NO. J-2, J-3 & J-5.
7. SEE DWGS. NO. J-4 AND J-25 FOR RAILING POST SPACING AND RAILING DETAILS.
8. SEE DWG. NO. J-19 FOR ADDITIONAL JOINT DETAILS.

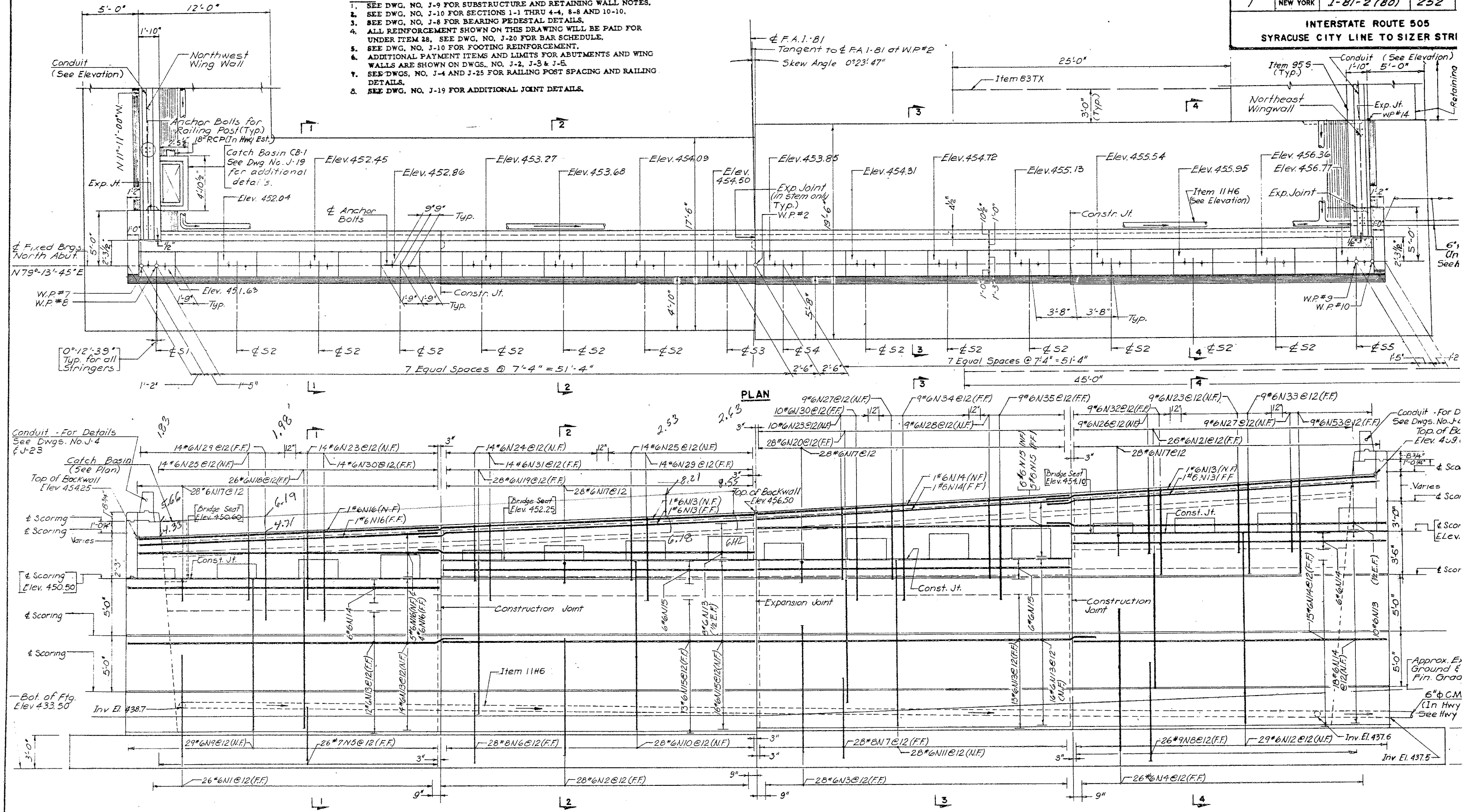

PLAN

ELEVATION

F.A.I. 81 OVER EAST COLVIN STREET

NORTH ABUTMENT

PREPARED AND RECOMMENDED BY LEONARD S. WEGMAN CO.
BY _____
N.Y.S. P.E. LIC. 23287 DATE 12-9-63

DRAWN BY:	CHECKED BY:
HC BF	JC
REVIEWED BY:	DATE
Hugh Keay	12-9-63

LEONARD S. WEGMAN CO. ENGINEERS
235 EAST 45TH STREET, NEW YORK 17, N. Y.

SCALE 1" = 1'-0"
DWG. NO.

ORIOLE PRESS, INC. BROOKLYN 17, N. Y. REPRODUCTION NO. 40068

F.I.C. 64-7

FED. RD. REG. NO.	STATE	FEDERAL AID PROJECT NO.	SHEET NO.
1	NEW YORK	I-81-2 (80)	253

INTERSTATE ROUTE 505
SYRACUSE CITY LINE TO SIZER STREE

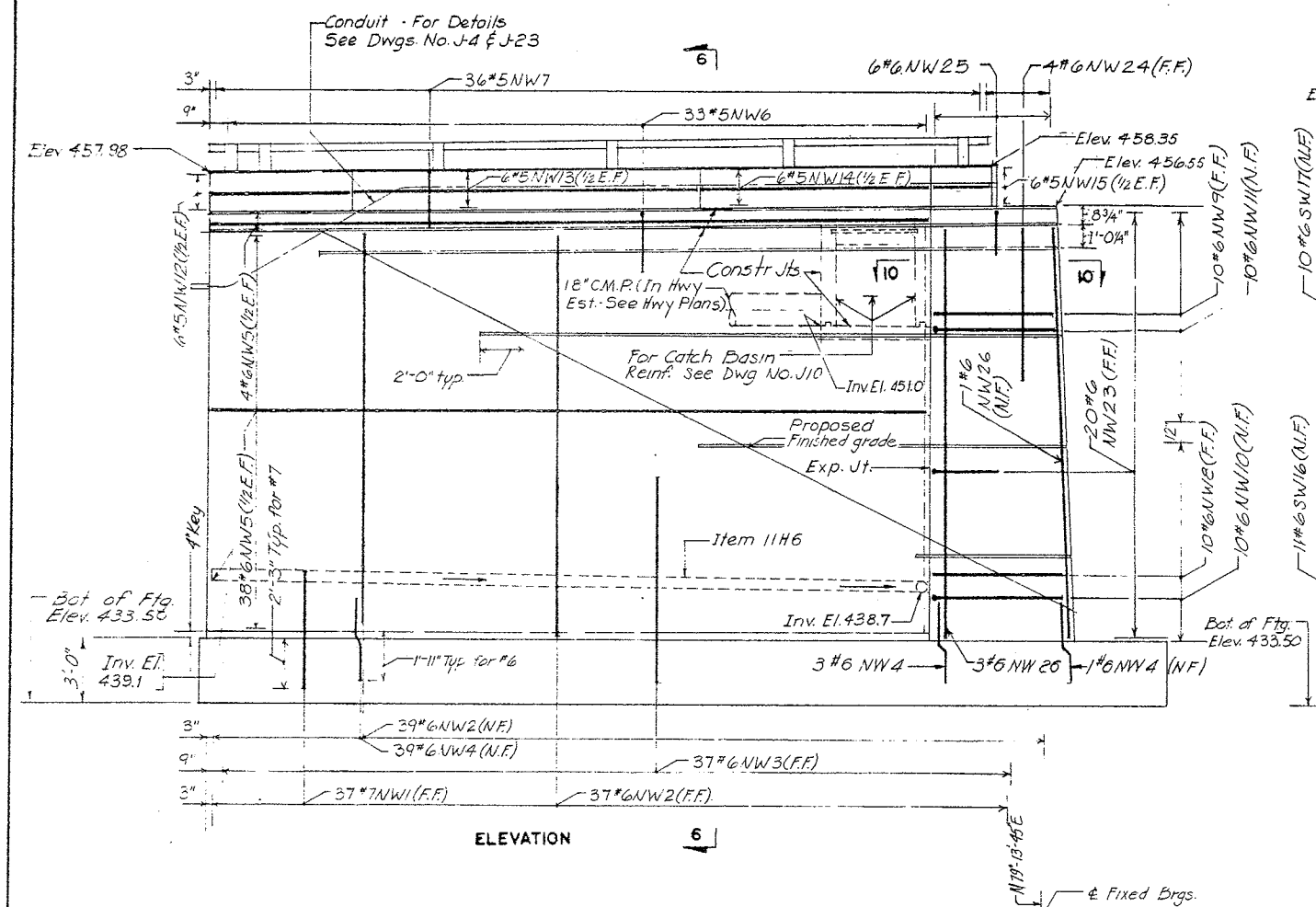

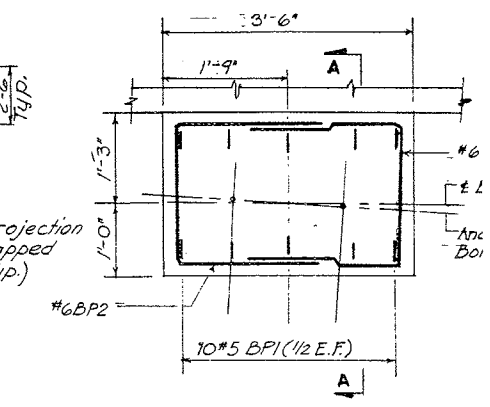

PLAN

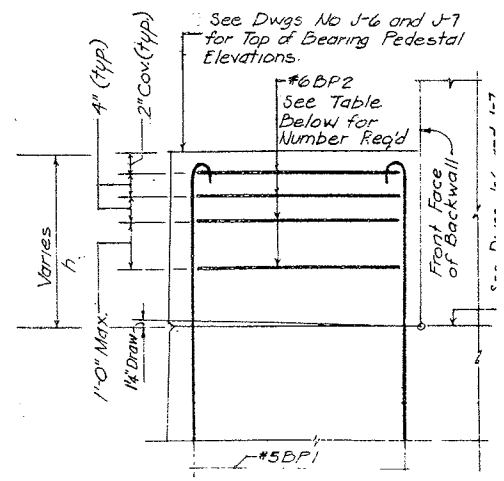

SECTION A-A

BEARING PEDESTAL DETAILS

N.T.S.

	NUMBER OF BP-2 REQD
h ≤ 1'-6"	6 per Pedestal
1'-6" < h < 2'-3"	8 per Pedestal
h ≥ 2'-3"	10 per Pedestal

NOTES:
1. SEE DWG. NO. J-9 FOR SUBSTRUCTURE AND RETAINING WALL NOTES.
2. SEE DWG. NO. J-10 FOR SECTION 6-6, 10-10 & 7-7.
3. ALL REINFORCEMENT SHOWN ON THIS DRAWING WILL BE PAID FOR UNDER ITEM 28. SEE DWG. NO. J-20 FOR BAR SCHEDULE.
4. SEE DWG. NO. J-10 FOR FOOTING REINFORCEMENT.
5. ADDITIONAL PAYMENT ITEMS AND LIMITS FOR ABUTMENTS AND WING WALLS ARE SHOWN ON DWGS. NO. J-2; J-8 & J-5
6. SEE DWGS. NO. J-4 AND J-25 FOR RAILING POST SPACING AND RAILING DETAILS.
7. SEE DWG. NO. J-19 FOR ADDITIONAL JOINT DETAILS.

NORTHWEST WING WALL

SCALE : ¼" = 1'-0"

SOUTHWEST WING WALL

SCALE : ¼" = 1'-0"

PREPARED AND RECOMMENDED BY
LEONARD S. WEGMAN CO.
BY Leonard S. Wegman Co.
N.Y.S. P.E. LIC. 23287 DATE 12-9-63

F.A.I. 81 OVER EAST COLVIN STREET

SOUTHWEST AND NORTHWEST WING WALLS

DRAWN BY:	CHECKED BY:	LEONARD S. WEGMAN CO. ENGINEERS	SCALE AS NOTED
BF HG	JC	235 EAST 45TH STREET, NEW YORK 17, N.Y.	DWG. NO. J
REVIEWED BY:	DATE		
Leonard S. Wegman Co.	12-9-63		

OFFSET PRESS INC. BROOKLYN 17, N.Y. REPRODUCTION NO. 6004

P.I.C. 84-1

FED. RD. REG. NO.	STATE	FEDERAL AID PROJECT NO.	SHEET NO.
1	NEW YORK	I-81-2 (80)	254

INTERSTATE ROUTE 505
SYRACUSE CITY LINE TO SIZER S

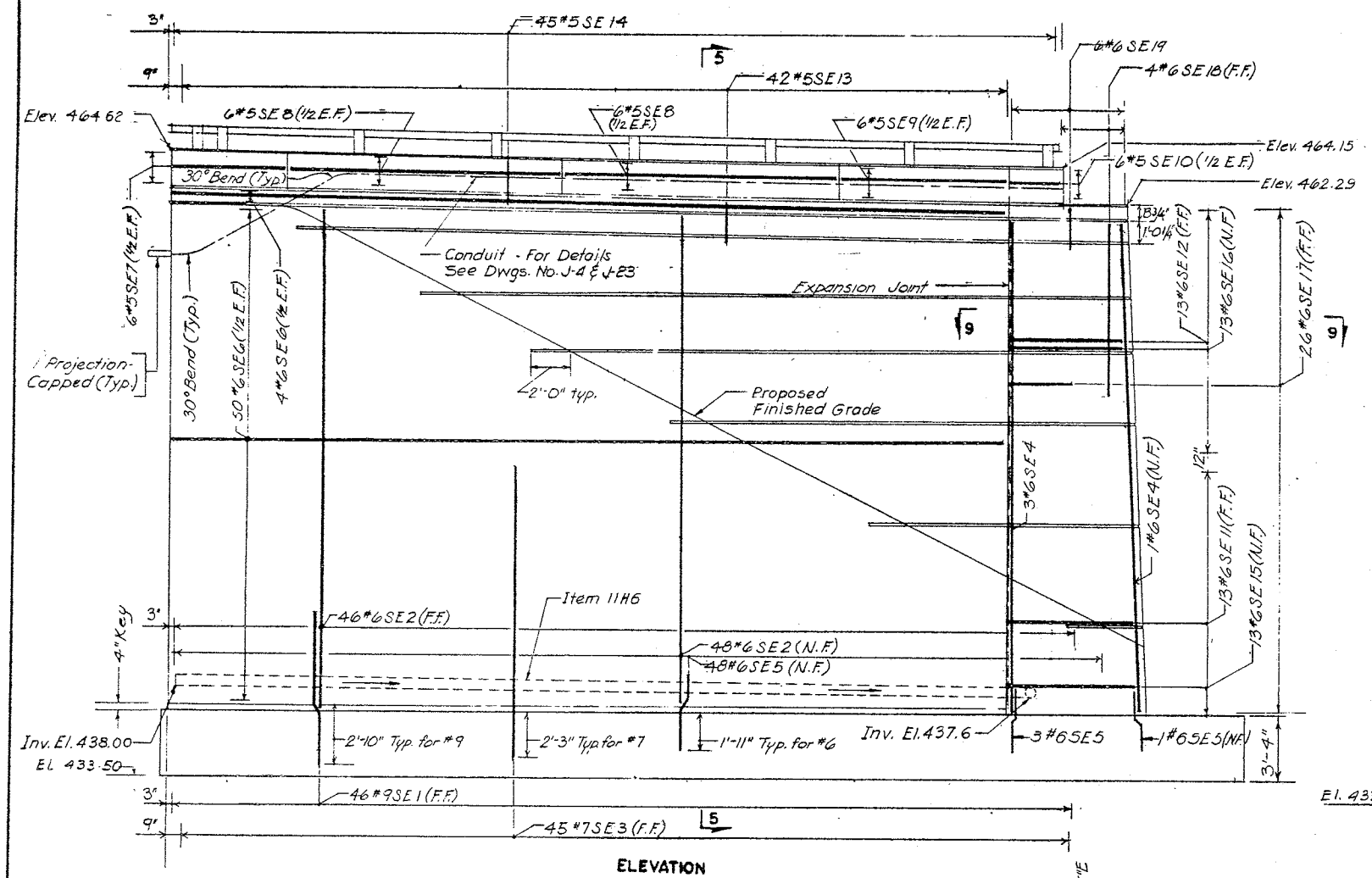

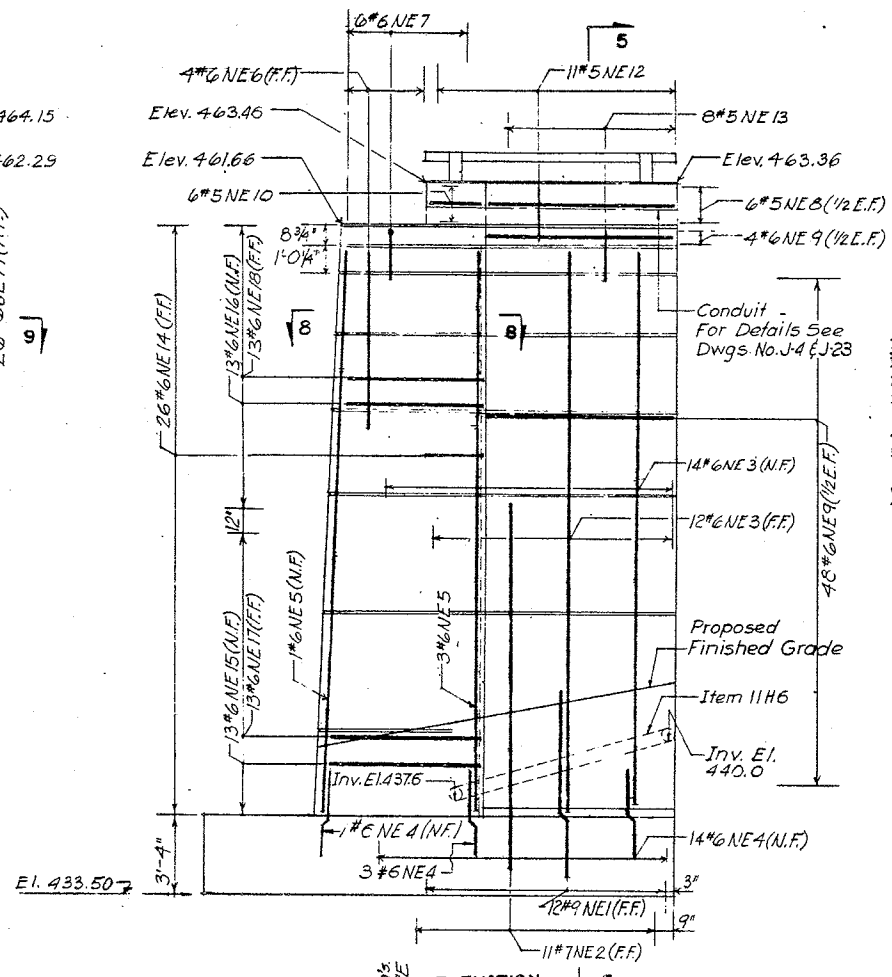

NOTES:
1. SEE DWG. NO. J-10 FOR SECTIONS 5-5, 8-8 & 9-9.
2. SEE DWG. NO. J-8 FOR BEARING PEDESTAL DETAILS.
3. ALL REINFORCEMENT SHOWN ON THIS DRAWING WILL BE PAID FOR UI ITEM 28. SEE DWG. NO. J-20 FOR BAR SCHEDULE.
4. SEE DWG. NO. J-10 FOR FOOTING REINFORCEMENT.
5. ADDITIONAL PAYMENT ITEMS AND LIMITS FOR ABUTMENTS AND WING ARE SHOWN ON DWGS. NO. J-2 & J-5.
6. SEE DWGS. NO. J-4 AND J-25 FOR RAILING POST SPACING AND RAILINC
7. SEE DWG. NO. J-19 FOR ADDITIONAL JOINT DETAILS.

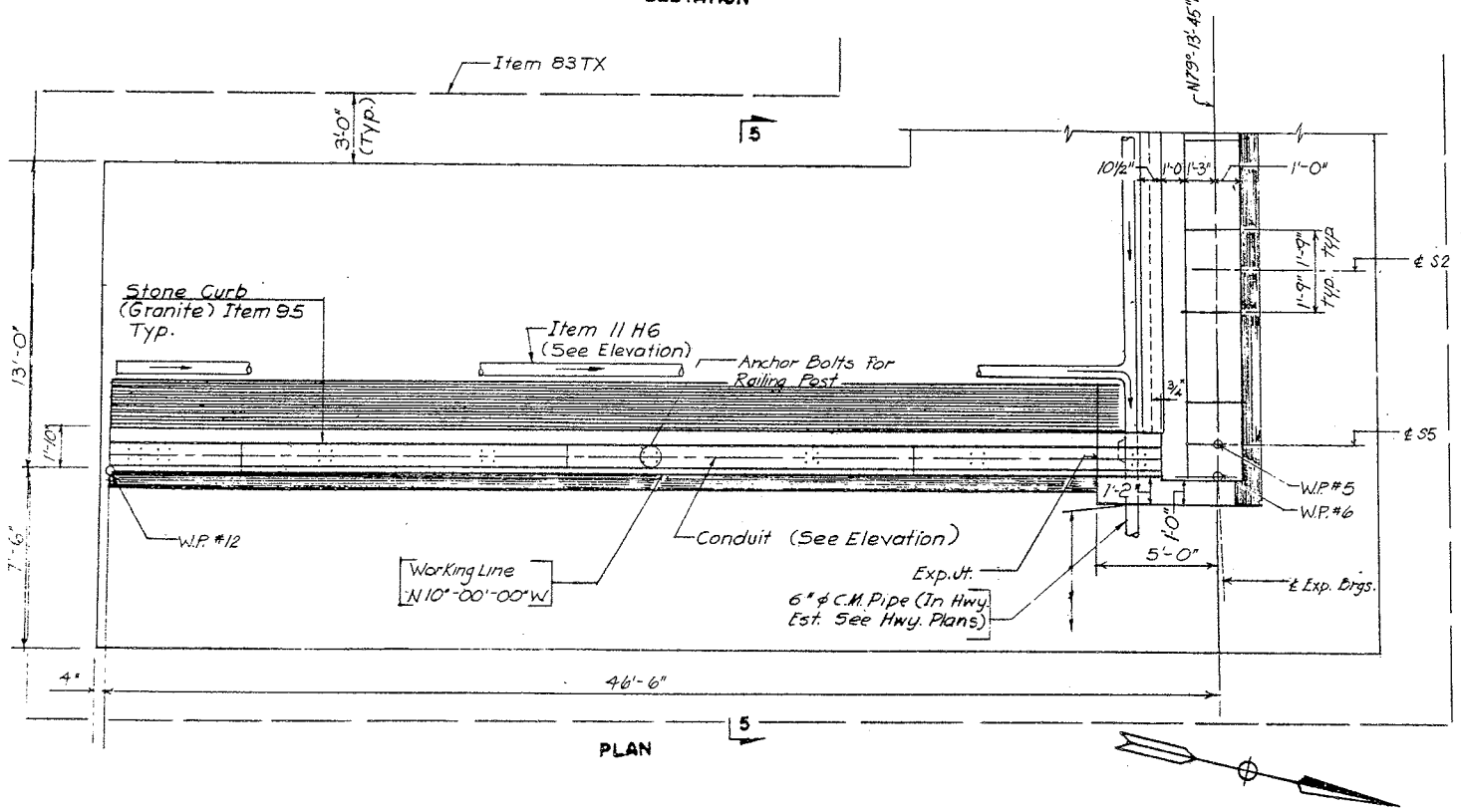

SOUTHEAST WING WALL
SCALE: 1/4" = 1'-0"

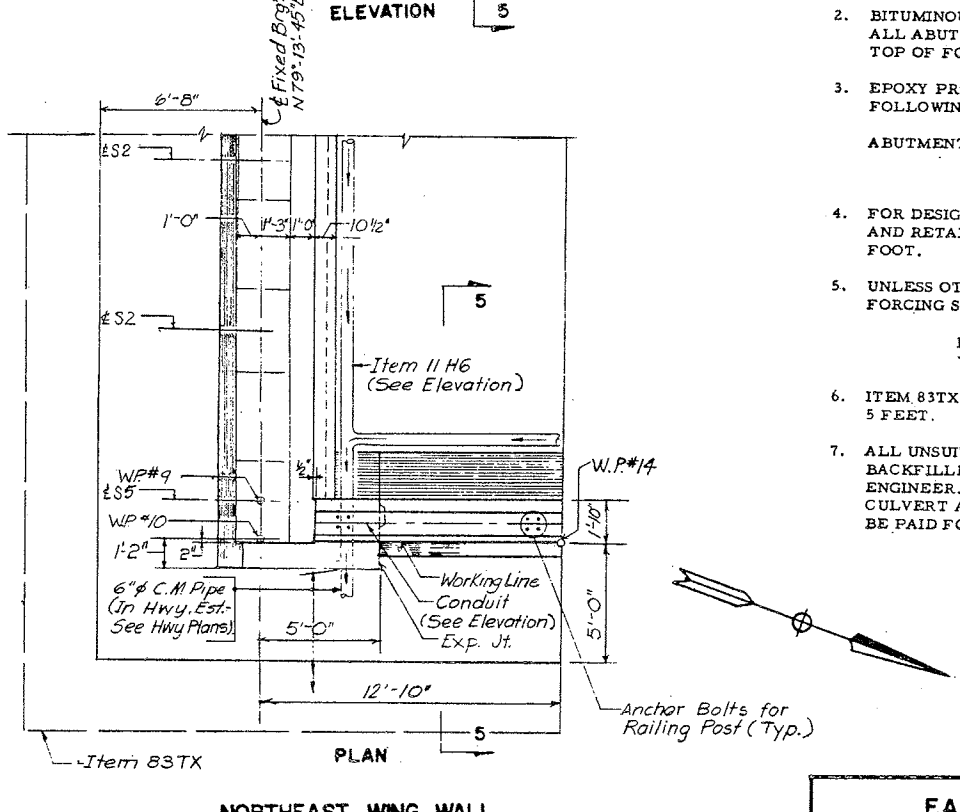

NORTHEAST WING WALL
SCALE: 1/4" = 1'-0"

SUBSTRUCTURE & RETAINING WALL NOTES

1. TOP OF BACKWALLS OF ABUTMENTS ON WHICH ASBESTOS SHEET IS TO BE PLACED SHALL BE STEEL TROWEL FINISHED.
2. BITUMINOUS MATERIAL, ITEM 61, SHALL BE APPLIED TO THE BA ALL ABUTMENTS, WINGWALLS, AND RETAINING WALLS "F" & "G TOP OF FOOTINGS TO THE LIMITS AS SHOWN ON PAYMENT LIMIT
3. EPOXY PROTECTIVE COATING FOR CONCRETE SHALL BE APPLIE FOLLOWING SURFACES:

   ABUTMENTS - ALL EXPOSED PEDESTAL SURFACES, BRIDGE SEAT VERTICAL SURFACES OF BACKWALL AND CURTAIN FACING THE SUPERSTRUCTURE..
4. FOR DESIGN PURPOSES THE FOUNDATION PRESSURE OF BOTH AB AND RETAINING WALLS "F" & "G" DOES NOT EXCEED 2 TONS PER FOOT.
5. UNLESS OTHERWISE SHOWN, THE MINIMUM CONCRETE COVER FO FORCING STEEL IN THE SUBSTRUCTURE SHALL BE AS FOLLOWS:

   FOOTINGS (INCLUDING UNFORMED BOTTOM) 3"
   WALLS ABOVE FOOTINGS 2"
6. ITEM 83TX TO BE USED ONLY WHERE DEPTH OF EXCAVATION EX 5 FEET.
7. ALL UNSUITABLE MATERIAL UNDER FOOTINGS SHALL BE REMOV BACKFILLED WITH SELECTED GRANULAR FILL AS ORDERED BY T ENGINEER. THE EXCAVATION SHALL BE PAID FOR UNDER TRENC CULVERT AND BRIDGE EXCAVATION (ITEM 5) AND THE BACKFILL BE PAID FOR UNDER SELECTED GRANULAR FILL (ITEM 2EF-B).

PREPARED AND RECOMMENDED BY LEONARD S. WEGMAN CO.
BY Herbert Wegman
N.Y.S. P.E. LIC. 23287 DATE 12-9-63

F.A.I. 81 OVER EAST COLVIN STREET
SOUTHEAST AND NORTHEAST WING WALLS

DRAWN BY: BF	CHECKED BY: JC LR
REVIEWED BY: RWH	DATE 12-9-63

LEONARD S. WEGMAN CO.
ENGINEERS
235 EAST 45TH STREET, NEW YORK 17, N.Y.

SCALE
DWG. NO.

FED. RD. REG. NO.	STATE	FEDERAL AID PROJECT NO.	SHEET NO.
1	NEW YORK	I-81-2(80)	255

INTERSTATE ROUTE 505
SYRACUSE CITY LINE TO SIZER STRI

NOTES:
1. SEE DWG. NO. J-9 FOR SUBSTRUCTURE AND RETAINING WALL NOTES.
2. WORK THIS DRAWING WITH DWGS. NO. J-6, J-7, J-8 & J-9.
3. ALL REINFORCEMENT SHOWN ON THIS DRAWING WILL BE PAID FOR UNDER ITEM 28 SEE DWG. NO. J-20 FOR BAR SCHEDULE
4. ADDITIONAL PAYMENT ITEMS AND LIMITS FOR ABUTMENTS AND WING WALLS ARE SHOWN ON DWGS. NO. J-2, J-3 & J-5.
5. SEE DWG. NO. J-19 FOR ADDITIONAL JOINT DETAILS.

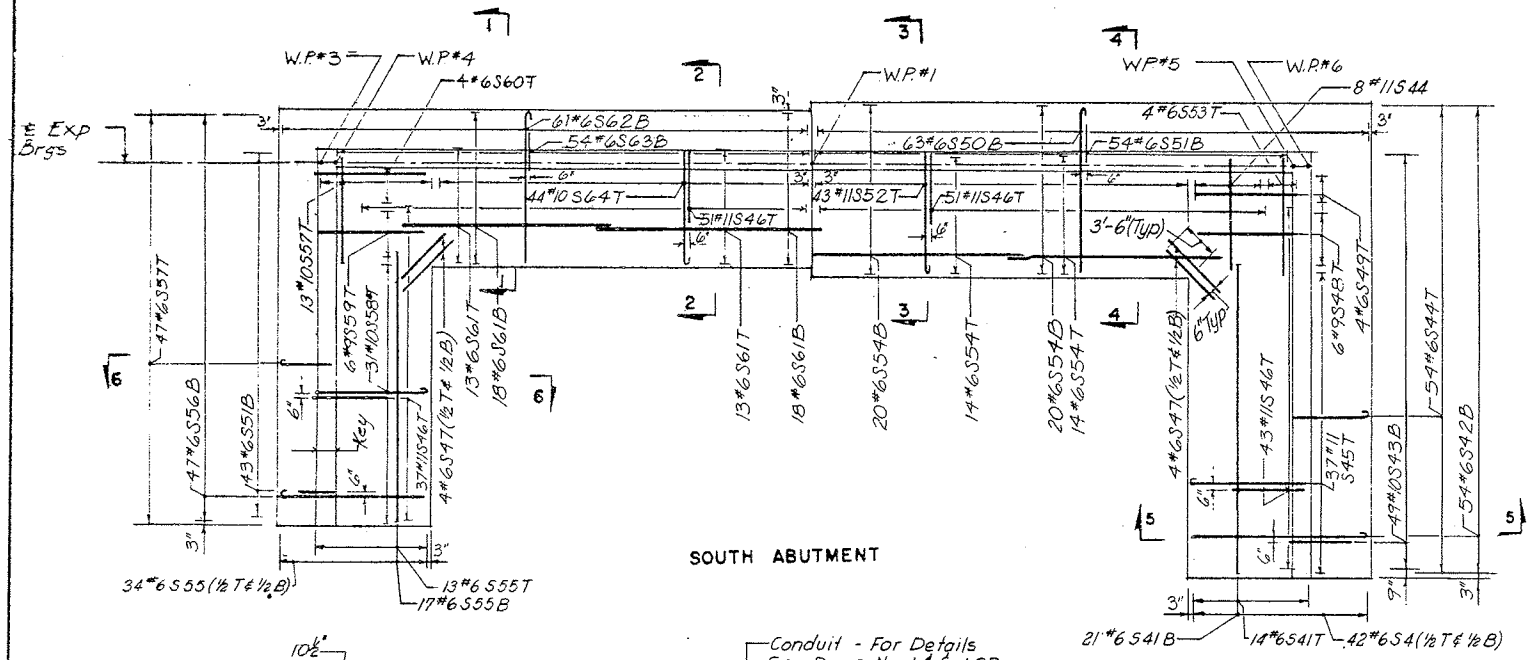

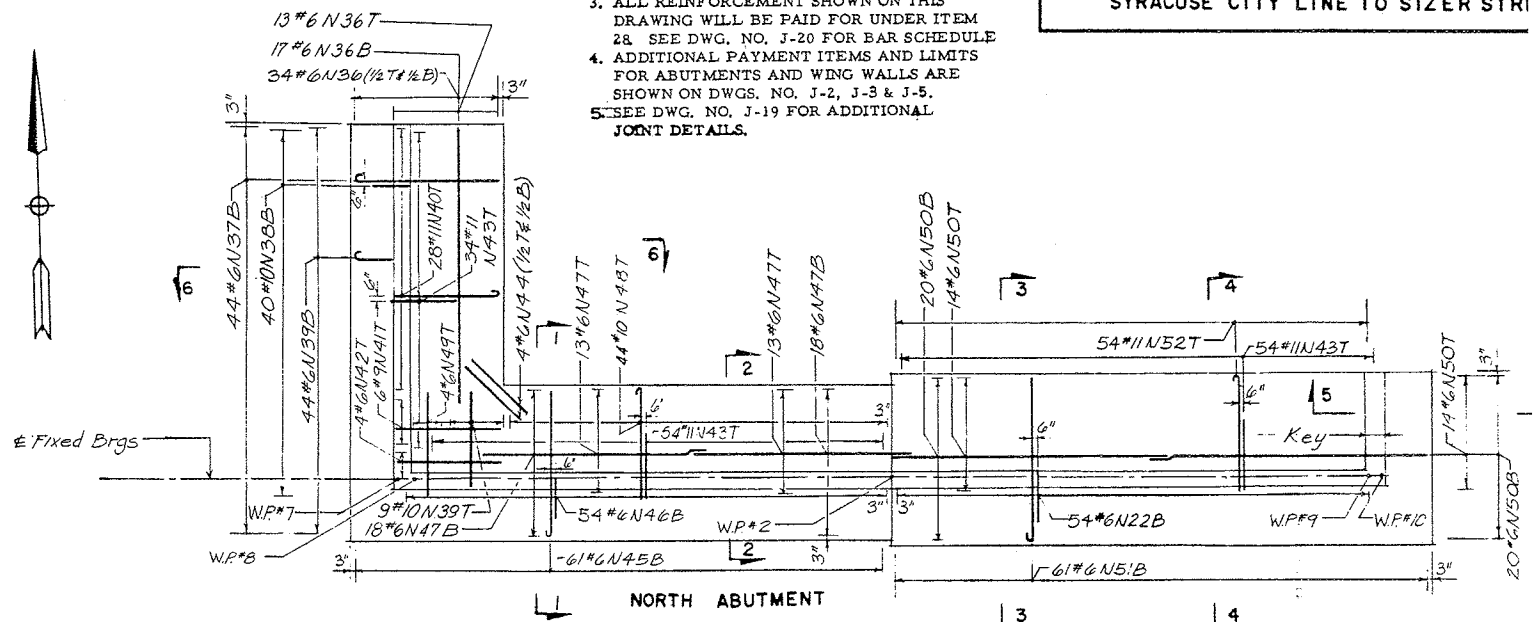

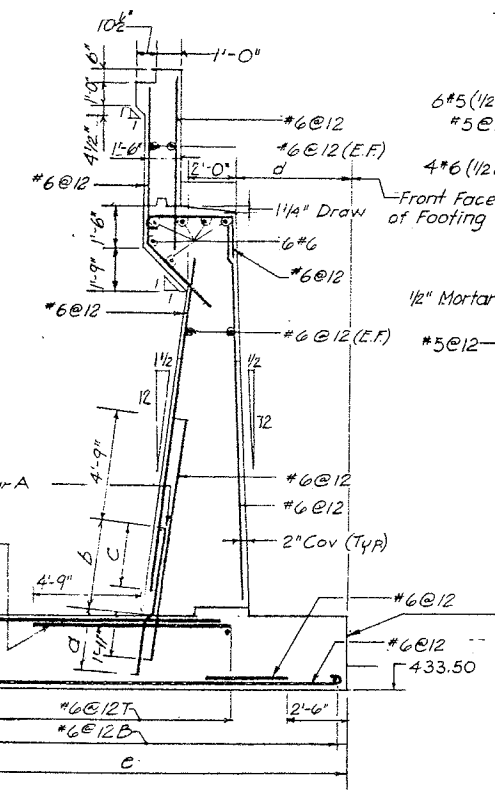

SECTIONS 1-1 THRU 4-4

	SECTION			
	1-1	2-2	3-3	4-4
Bar A	#7@12	#8@12	#8@12	#9@12
Bar B	#10@12	#10@12	#11@12	#11@12
d	2'-3"	2'-6"	2'-6"	2'-10"
b	2'-6"	3'-9"	4'-9"	6'-0"
c	2'-6"	3'-9"	2'-3"	2'-3"
d	4'-10"	4'-10"	5'-8"	5'-8"
e	17'-6"	17'-6"	19'-6"	19'-6"
f	3'-0"	3'-0"	3'-4"	3'-4"

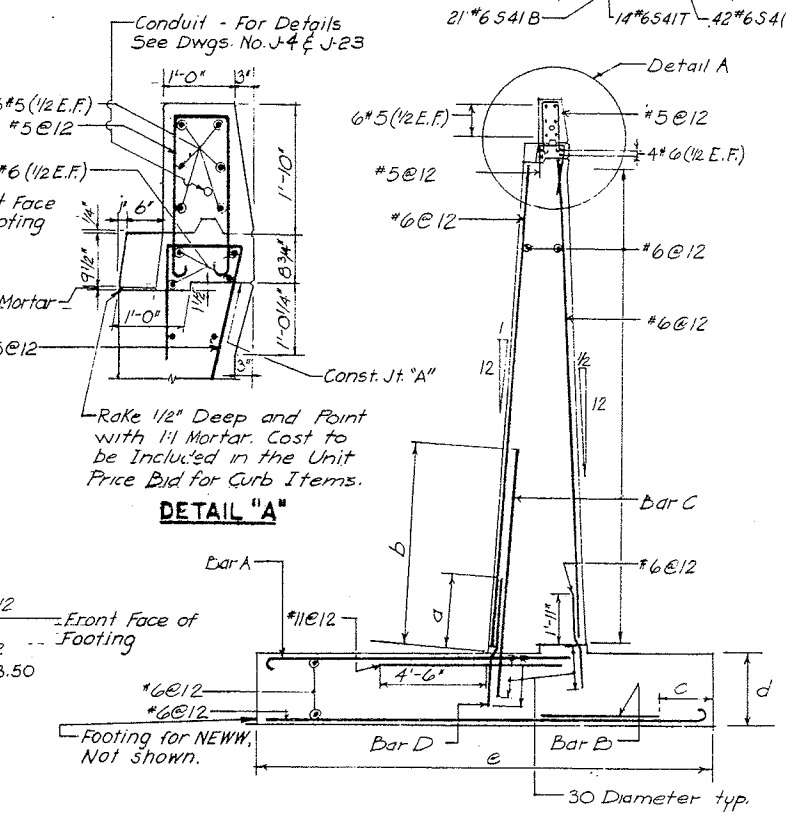

DETAIL "A"

SECTIONS 5-5 & 6-6

	SECTION	
	5-5	6-6
Bar A	#11@12	#10@12
Bar B	#10@12	#6@12
Bar C	#7@12	#6@12
Bar D	#9@12	#7@12
a	5'-0"	2'-9"
b	12'-3"	7'-6"
c	2'-3"	2'-6"
d	3'-4"	3'-0"
e	20'-6"	17'-0"

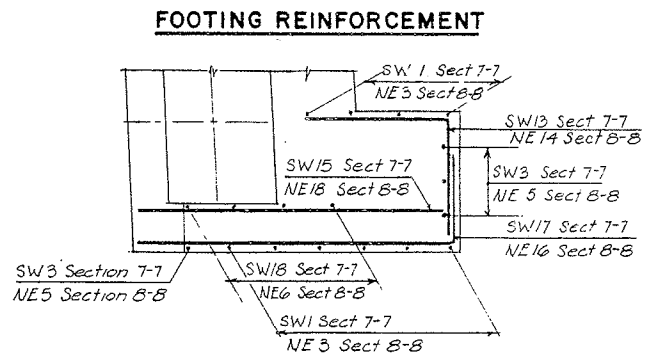

FOOTING REINFORCEMENT

SECTIONS 7-7 & 8-8

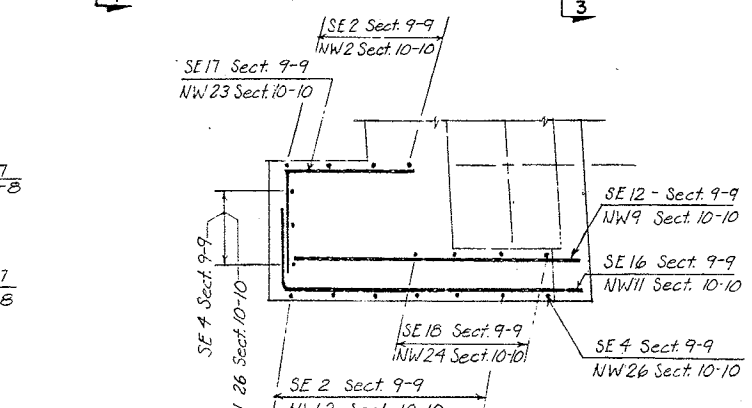

SECTIONS 9-9 & 10-10

CONSTRUCTION PROCEDURE FOR WI
WALLS AND RETAINING WALL "F".

1. POUR CONCRETE BELOW CONST JOINT 'A' SHOWN ON DETAIL "A' DRAWING.
2. SET STONE CURBS (GRANITE) & I LOWER PORTION OF PARAPET F LINE AND GRADE.
3. SET RAILING ANCHOR BOLTS BY OF TEMPLATE AND POUR PARA ERECT RAILING.
4. ANCHOR BOLTS SHALL BE CUT O ABOVE NUT AND PEENED. THE TOPS SHALL BE PAINTED AS REQ BY THE SPECIFICATIONS FOR M EXCEPT THAT THE FINAL TWO (COATS SHALL BE ALUMINUM PAI COMPLYING WITH THE SPECIFIC FOR M 18J.

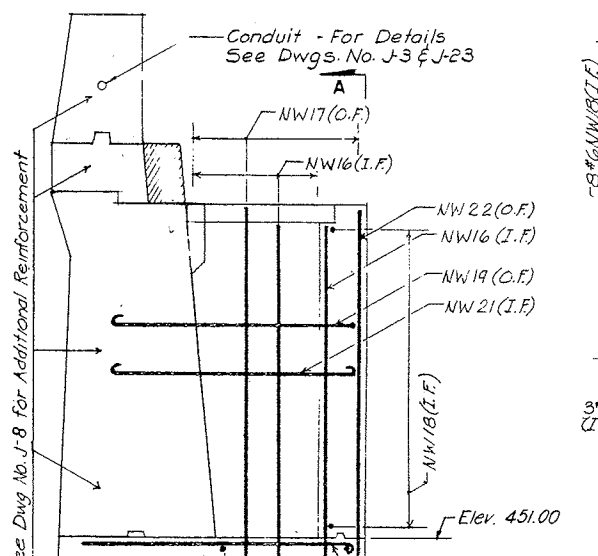

SECTION 8-8

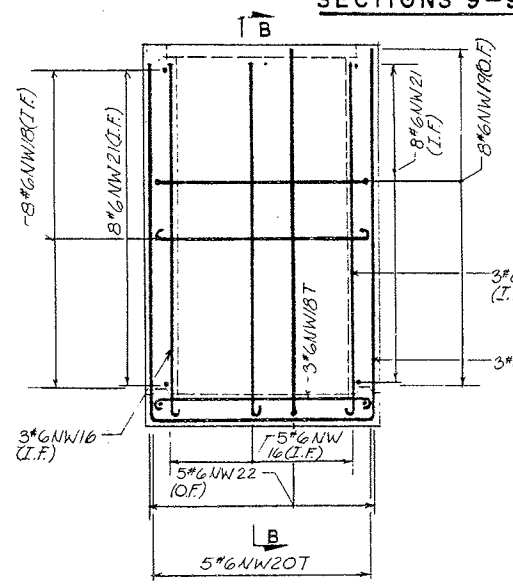

ELEVATION VIEW A-A

Note: See Dwg. No. J-19 for additional details of Catch Basin.

REINFORCEMENT DETAILS FOR CATCH BASIN CB-1

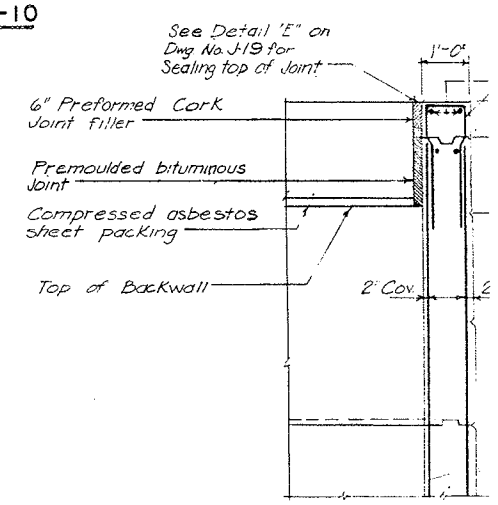

TYPICAL SECTIO
AT END CURTAIN WA

PREPARED AND RECOMMENDED BY
LEONARD S. WEGMAN CO.
BY Leonard S. Wegman
N.Y.S. P.E. LIC. 23287 DATE 12-9-63

F.A.I. 81 OVER EAST COLVIN STREET

ABUTMENT DETAILS

DRAWN BY: BF	CHECKED BY: JC RB
REVIEWED BY: Leonard S. Wegman	DATE 12-9-63

LEONARD S. WEGMAN CO.
ENGINEERS
235 EAST 45TH STREET, NEW YORK 17, N. Y.

SCALE NO SC
DWG. NO. J

DOUGLAS FISHER INC., BROOKLYN 17, N. Y. REPRINTED NO. 4006

FED. RD. REG. NO.	STATE	FEDERAL AID PROJECT NO.	SHT. NO.
	NEW YORK	I-81-2(80)	264

INTERSTATE ROUTE 505
SYRACUSE CITY LINE TO SIZER STREE

1031549

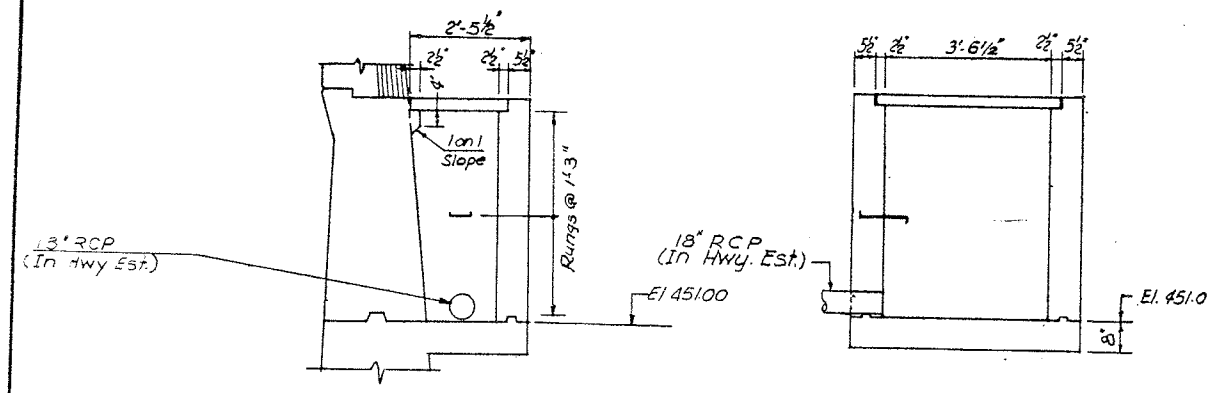

SECTION A-A

SECTION B-B

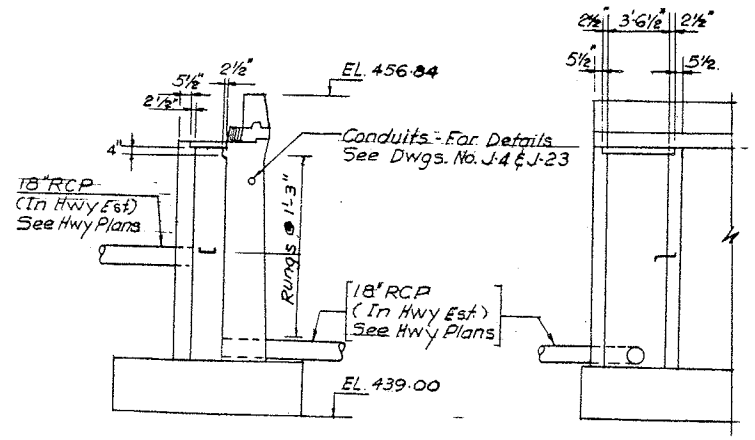

SECTION C-C

SECTION D-D

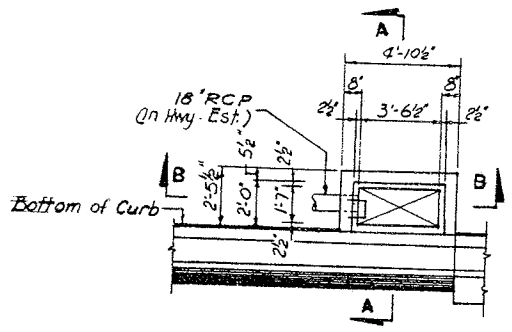

PLAN OF CATCH BASIN CB-1

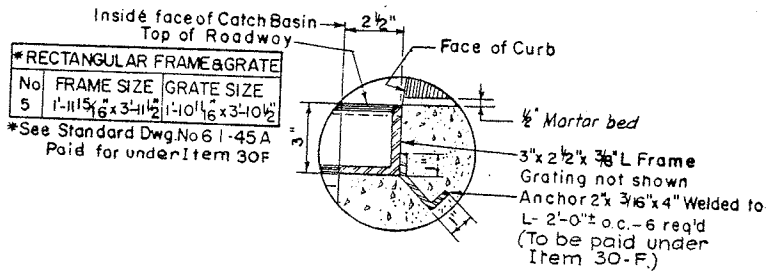

*RECTANGULAR FRAME & GRATE		
No	FRAME SIZE	GRATE SIZE
5	1'-11 15/16" x 3'-11½"	1'-10 1/16" x 3'-10½"

*See Standard Dwg. No. 61-45A Paid for under Item 30F

DETAIL "A"

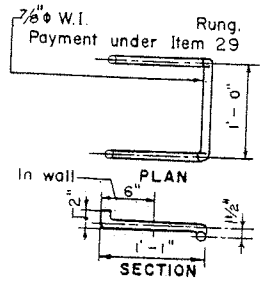

DETAIL OF RUNG

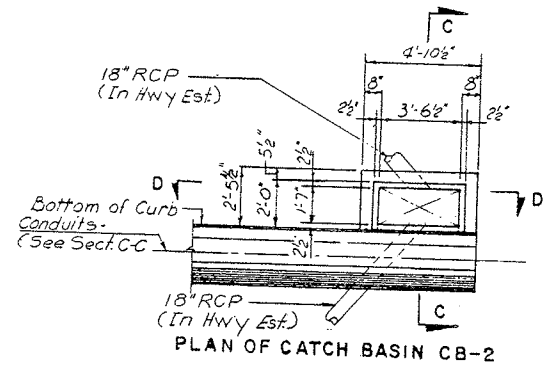

PLAN OF CATCH BASIN CB-2

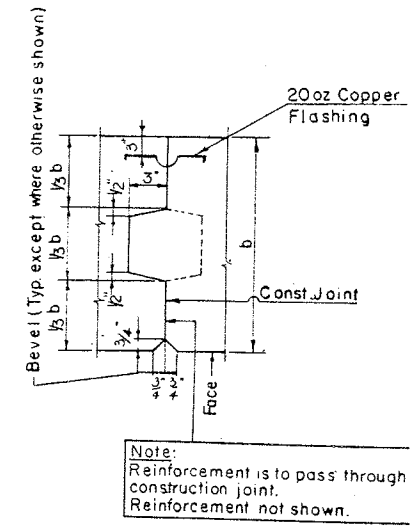

Note:
Reinforcement is to pass through construction joint.
Reinforcement not shown.

TYPICAL KEY AND JOINT DETAIL FOR VERTICAL CONSTRUCTION JOINT IN STEM
no scale

CATCH BASIN DETAILS
NO SCALE

Reinf. not shown. See Dwgs. No J-10 & J-14

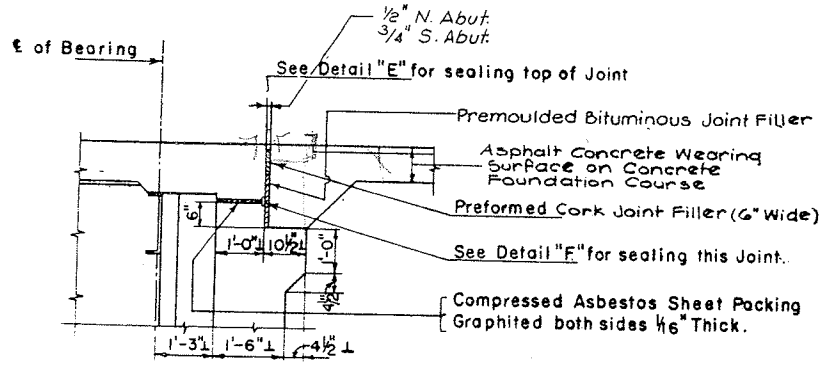

DETAIL "C"
Scale: ½" = 1'-0"

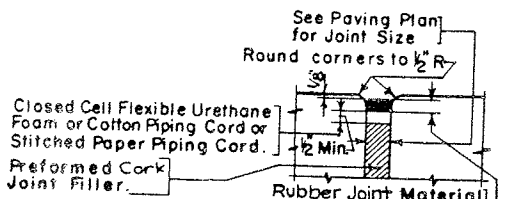

DETAIL "E" (Item 352 X-A)
Scale: 3" = 1'-0"

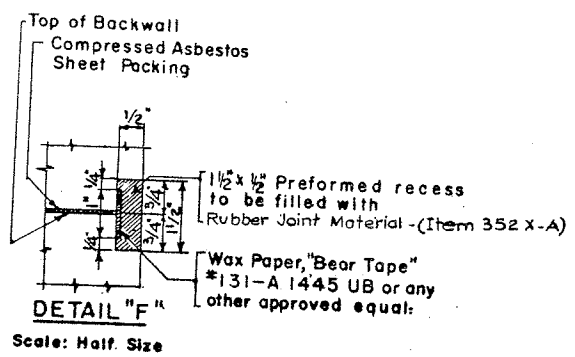

DETAIL "F"
Scale: Half Size

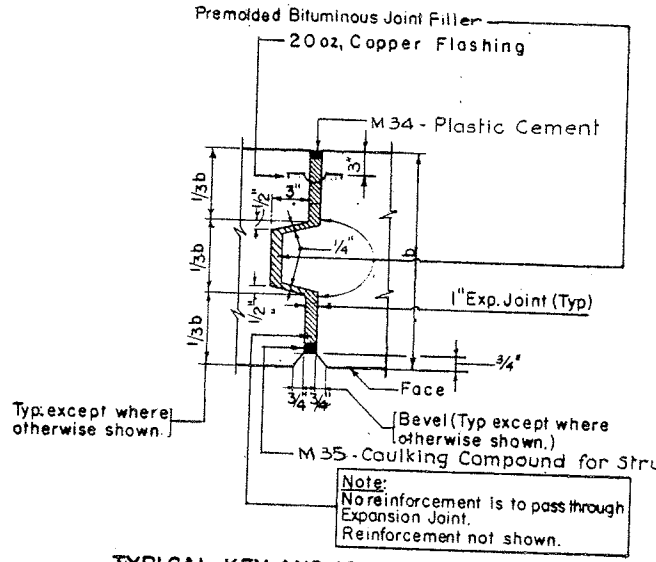

TYPICAL KEY AND JOINT DETAIL FOR VERTICAL EXPANSION JOINT IN STEM
NO SCALE

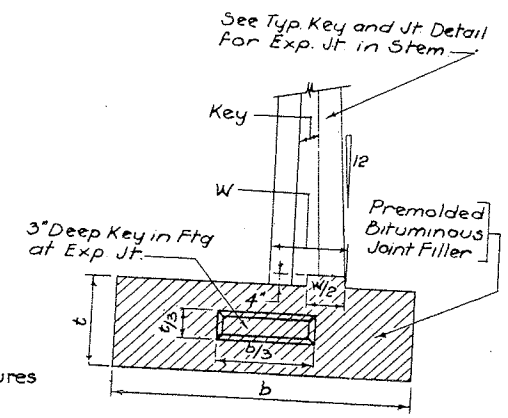

EXPANSION JOINT IN FOOTING
NO SCALE

PREPARED AND RECOMMENDED BY
LEONARD S. WEGMAN CO.
BY [signature]
N.Y.S. P.E. LIC. 23287 DATE 12-9-63

F.A.I. 81 OVER EAST COLVIN STREET
DETAILS OF JOINTS AND CATCH BASINS

DRAWN BY:	CHECKED BY:	LEONARD S. WEGMAN CO. ENGINEERS 235 EAST 45TH STREET, NEW YORK 17, N.Y.	SCALE AS NOTED
BE	HG & LE		
REVIEWED BY: [signature]	DATE 12-9-63		DWG. NO. J-15

FED. RD. REG. NO.	STATE	FEDERAL AID PROJECT NO.	SHEET NO.	TOTAL SHEETS
	NEW YORK	I-81-2(80)	267	289

INTERSTATE ROUTE 505
SYRACUSE CITY LINE TO SIZER STREET

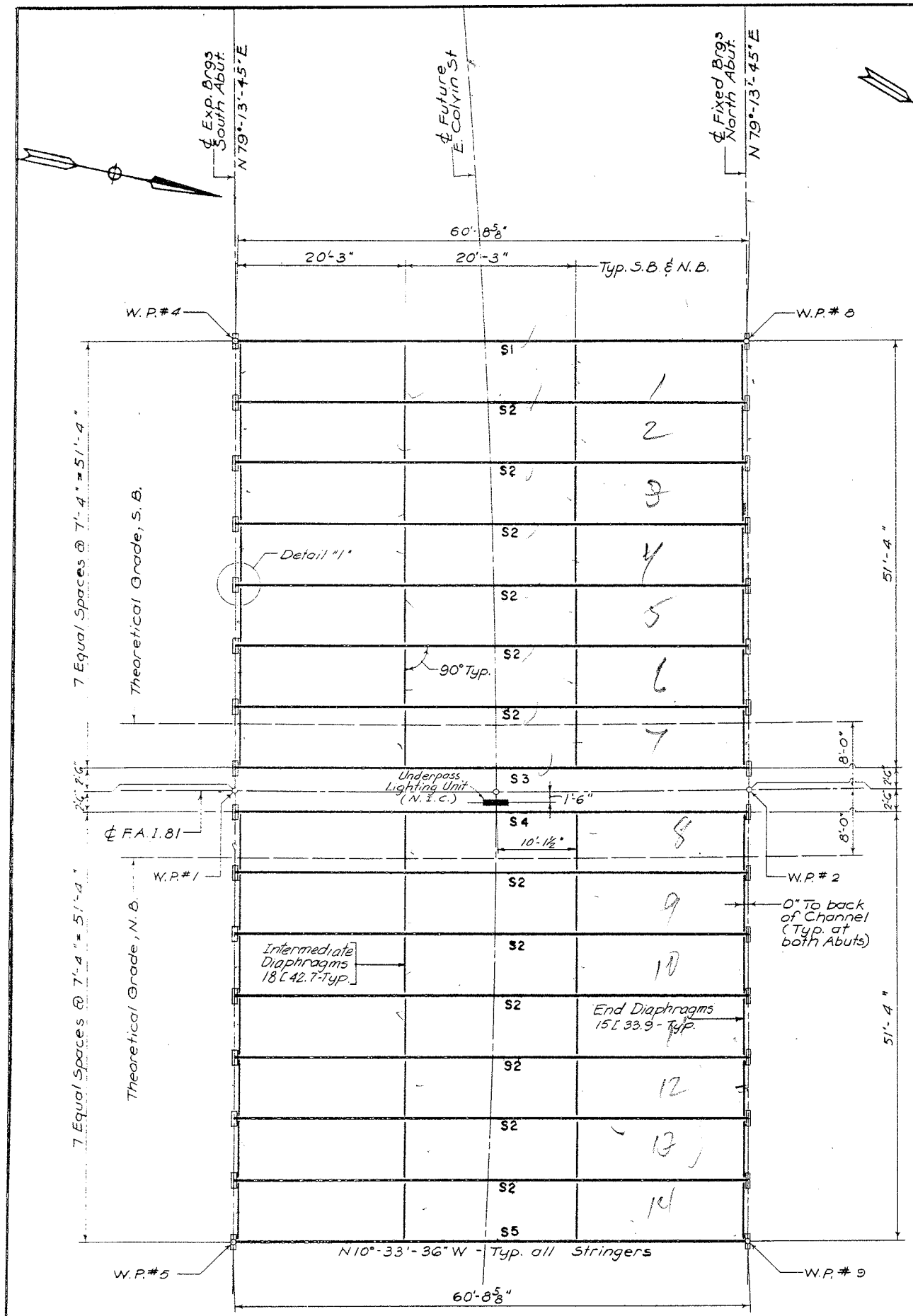

FRAMING PLAN
SCALE: 1/8" = 1'-0"

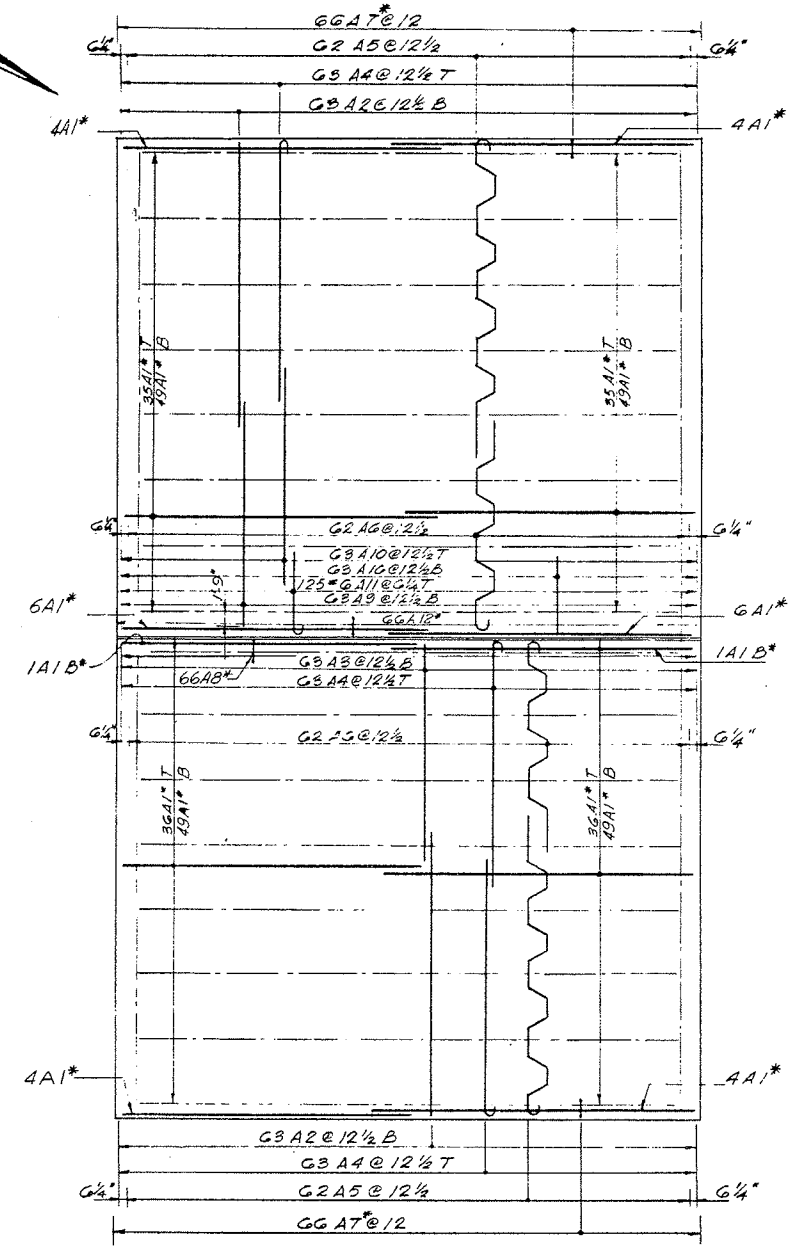

SLAB REINFORCEMENT PLACEMENT DIAGRAM

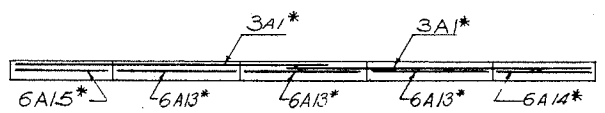

WESTERLY PARAPET



MALL

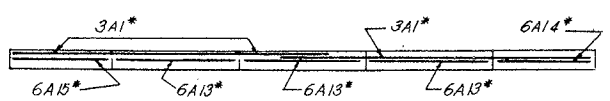

EASTERLY PARAPET

REINFORCEMENT PLACEMENT DIAGRAMS FOR PARAPETS AND MALL N.T.S.

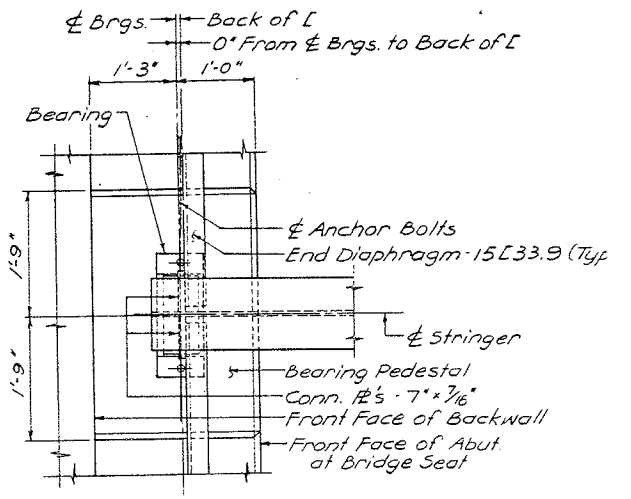

DETAIL "I"
SCALE: 3/4" = 1'-0"

SLAB BAR SCHEDULE

Mark	Size	No. Req'd N.B.	No. Req'd S.B.	Length	Type	A	B	C	D	E	F	G	H	K	Location
A-1	#5	190	202	33'-0"	Str.										Slab, Center & Parapet
A-2	"	G3	G3	30'-11"	"										"
A-3	"	G3		24'-6"	"										"
A-4	"	126	G3	28'-7"	1	0'-7"	28'-0"								"
A-5	"	G2	G2	35'-1"	14	0'-7"	2'-9"	7"	3'-3"	3'-3"	4'-6"			0'-5"	"
A-6	"	G2	G2	24'-10"	15	0'-7"	3'-0"	7"	3'-3"	3'-3"	5'-4"			0'-5"	"
A-7	"	GG	GG	8'-1"	17	0'-7"	3'-1"	8"	2'-0"	1'-2"		0'-7"	0'-3"	1'-2"	Parapet
A-8	"	GG		2'-3"	2		1'-4"	1'-0"							Mall
A-9	"		G3	26'-0"	Str.										Slab
A-10	"		G3	24'-0"	"										"
A-11	#6		125	8'-4"	16	7"	2'-3"	5'-6"					2'-3"	9"	"
A-12	#5		GG	7'-8"	7	7"	1'-10"	1'-7"	1'-10"	1'-6"		7"			Mall
A-13	"	18	18	13'-8"	Str.										Parapet
A-14	"	6	6	11'-2"	"										"
A-15	"	6	6	11'-5"	"										"
A-16	"		G3	7'-0"	3		3'-6"	3'-6"					3'-6"	9"	Slab

NOTES:
1. FOR SUPERSTRUCTURE NOTES SEE DWG. NO. J-23.
2. ALL DIMENSION SHOWN ON FRAMING PLAN ARE HORIZONTAL DIMENSIONS.
3. ALL STRUCTURAL STEEL SHOWN ON THIS DRAWING WILL BE PAID FOR UNDER ITEM 29.
4. ALL REINFORCEMENT SHOWN ON THIS DRAWING WILL BE PAID FOR UNDER ITEM 28.
5. S-1, S-2 ... ARE STRINGER DETAILS. SEE DWG. NO. J-24 FOR DETAILS.
6. FOR LOCATION OF BARS IN PARAPET AND MALL AND FOR LOCATION OF BARS MARKED THUS * SEE BRIDGE CROSS SECTION.
7. UNLESS OTHERWISE NOTED ALL BAR REINFORCING SIZES ON THIS DRAWING ARE #5.
8. SEE DWG. NO. J-20 FOR BAR BENDING DETAILS.
9. CONCRETE USED FOR BRIDGE SLAB WILL BE PAID FOR UNDER ITEM 18 M. CONCRETE USED FOR PARAPETS AND MALL WILL BE PAID FOR UNDER ITEM 18.

PREPARED AND RECOMMENDED BY
LEONARD S. WEGMAN CO.
BY _____
N.Y.S. P.E. LIC. 23287 DATE 12-9-63

F.A.I. 81 OVER EAST COLVIN STREET

FRAMING PLAN AND SLAB REINFORCEMENT

DRAWN BY:	CHECKED BY:	LEONARD S. WEGMAN CO. ENGINEERS	SCALE	AS NOTED
HL RS	MJA JPG			
REVIEWED BY:	DATE	235 EAST 45TH STREET, NEW YORK 17, N.Y.	DWG. NO.	J-22
	12-9-63			

F.I.C. 64-7

FED. RD. REG. NO.	STATE	FEDERAL AID PROJECT NO.	SHEET NO.	TOTAL SHEETS
	NEW YORK	I-81-2(80)	268	285

INTERSTATE ROUTE 505
SYRACUSE CITY LINE TO SIZER STREET

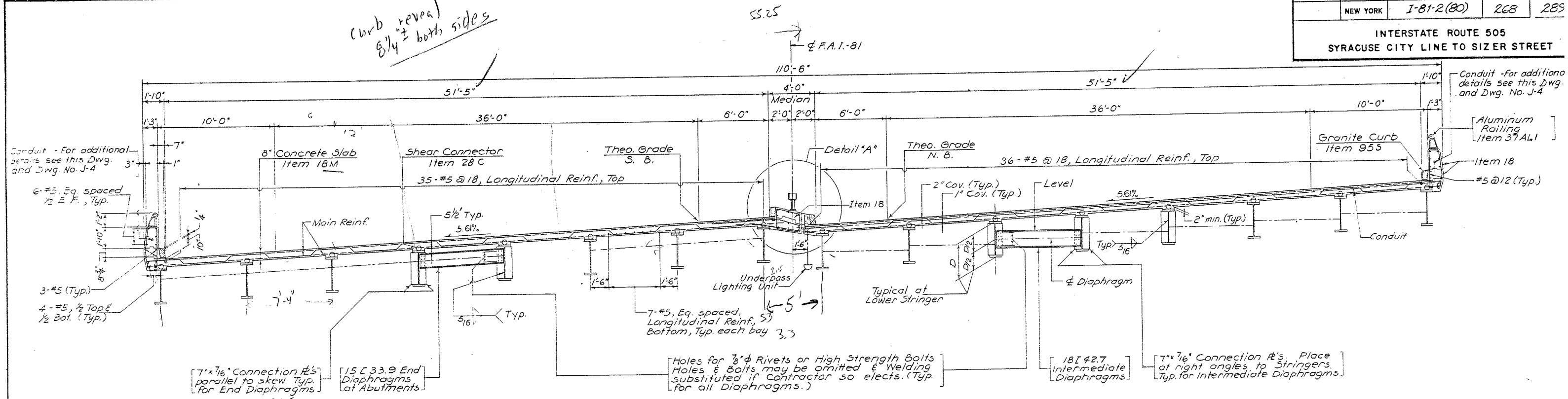

BRIDGE CROSS SECTION

SCALE: 1" = 1'-0"

55.25

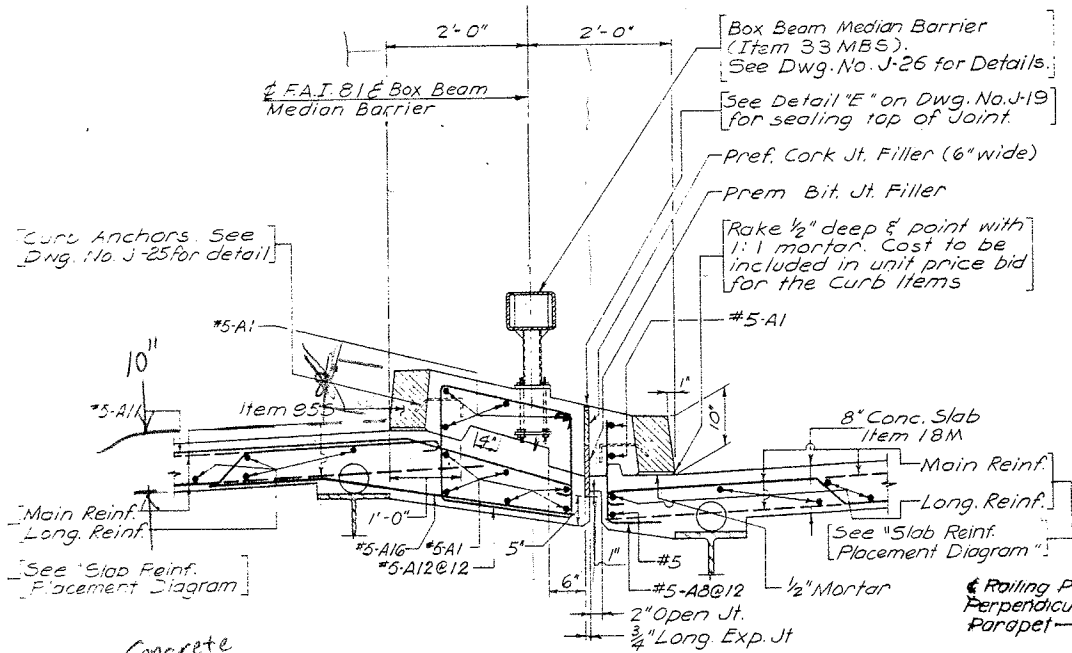

DETAIL "A"

SCALE: 1/4" = 1'-0"

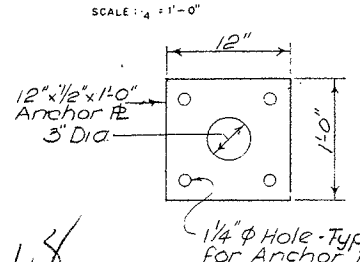

1.8
3.4

DETAIL OF ANCHOR PLATE

N.T.S.

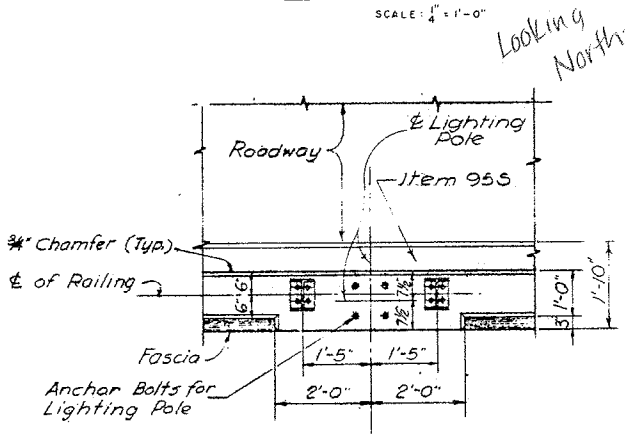

PLAN

SCALE: 1/2" = 1'-0"

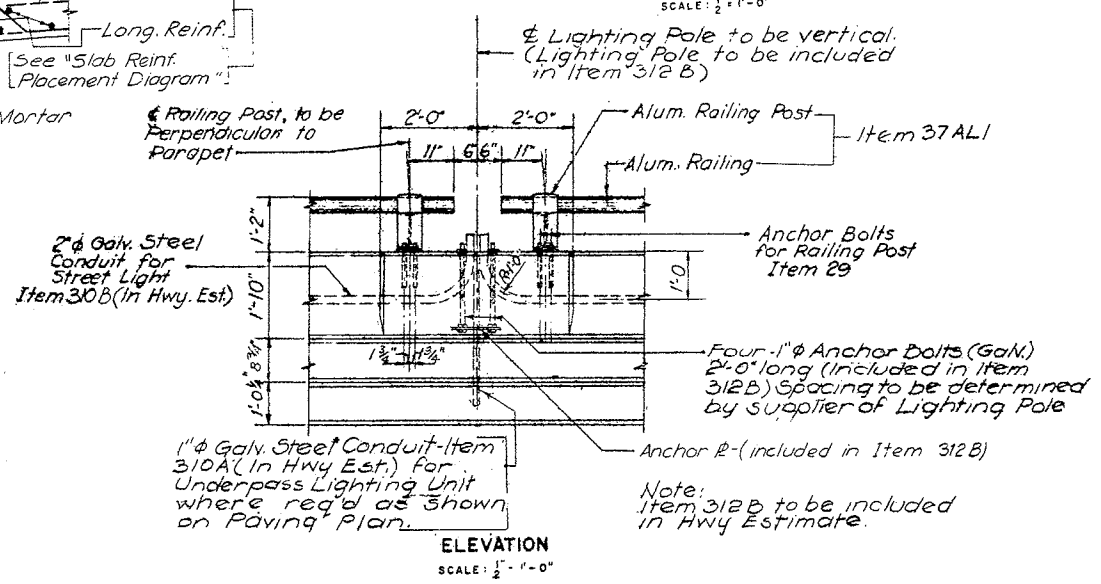

ELEVATION

SCALE: 1/2" = 1'-0"

LIGHTING POLE BASE ANCHORAGE DETAIL

J.P.M.

SLAB CONSTRUCTION PROCEDURE

1. POUR SLAB.
2. SET STONE CURBS (GRANITE) & POUR LOWER PORTION OF PARAPET TO PROPER LINE AND GRADE.
3. SET RAILING ANCHOR BOLTS BY MEANS OF TEMPLATE AND POUR PARAPET. ERECT RAILING.
4. ANCHOR BOLTS SHALL BE CUT OFF 1/8" ABOVE NUT AND PEENED. THE CUT TOPS SHALL BE PAINTED AS REQUIRED BY THE SPECIFICATIONS FOR M 18A, ESCEPT THAT THE FINAL TWO (2) COATS SHALL BE ALUMINUM PAINT COMPLYING WITH THE SPECIFICATIONS FOR M 18J.

NOTES:
1. UNLESS OTHERWISE NOTED ALL STEEL SHOWN ON THIS DRAWING SHALL BE PAID FOR UNDER ITEM 29.
2. ALL BAR REINFORCING SHOWN ON THIS DRAWING SHALL BE PAID FOR UNDER ITEM 28.
3. FOR RAILING, PARAPET AND CURB DETAILS SEE DWG. NO. J-25.

SUPERSTRUCTURE NOTES

1. ALL BEARINGS ARE TO BE FIELD WELDED TO BEAMS.
2. UNLESS OTHERWISE NOTED, ALL STRUCTURAL STEEL SHALL CONFORM TO THE REQUIREMENTS OF A. S. T. M. DESIGNATION A36-62T.
3. HIGH STRENGTH BOLTS, NUTS AND WASHERS SHALL CONFORM TO THE REQUIREMENTS OF A. S. T. M. DESIGNATION A-325. ALL STRUCTURAL STEEL, REGARDLESS OF TYPE, WILL BE PAID FOR UNDER ITEM 29.
3. MINIMUM PREHEAT AND INTERPASS TEMPERATURES SHALL BE MAINTAINED FOR WELDING IN ACCORDANCE WITH THE FOLLOWING TABLES:

THICKNESS OF THICKEST PART AT POINT OF WELDING	MINIMUM PREHEAT AND INTERPASS TEMPERATURES
TO 1" INCL.	NONE*
OVER 1" TO 2" INCL.	50°F*
OVER 2"	150°F

*WHEN BASE METAL TEMPERATURES ARE BELOW 32°F PREHEAT BASE METAL TO AT LEAST 70°F AND MAINTAIN DURING WELDING.

4. TO INSURE UNIFORM GRADES FOR THE SURFACE OF ROADWAY UNDER DEAD LOAD, AFTER ALL SUPERSTRUCTURE STEEL HAS BEEN ERECTED AND BRACED IN ITS FINAL POSITION, ELEVATION SHALL BE TAKEN ON THE TOP OF THE STEEL AT THE CENTE LINE OF WEB AT EACH CENTER LINE OF BEARING, CENTER OF THE SPAN AND AT OTHER LOCATIONS WHERE THEORETICAL BOTTOM OF THE SLAB ELEVATIONS ARE INDICATED ON THE PLANS. THE DEPTH OF HAUNCH REQUIRED TO POSITION THE SLAB FORMS WILL BE EQUAL TO THE DIFFERENCE IN ELEVATION BETWE THE BOTTOM OF SLAB ELEVATIONS AND THE TOP OF STEEL ELEVATIONS PLUS THE DEFLECTION DUE TO SUPERIMPOSED DEA LOAD.
5. LOW HYDROGEN TYPE ELECTRODES, CONFORMING TO A. W. S. -A. S. T. M. SPECIFICATION FOR MILD STEEL ARC-WELDING, ELECTRODES, CLASSIFICATION E 7015, E 7016 & E 7018.
6. IF THE CONTRACTOR ELECTS TO USE CORRUGATED METAL FORMS FOR THE STRUCTURAL SLAB, THE DETAILS OF THESE FOR SHALL BE SUBMITTED TO THE DEPUTY CHIEF ENGINEER (BRIDGES) FOR APPROVAL, PRIOR TO THEIR USE. THE CONTRACTOR ATTENTION IS DIRECTED TO ADDITIONAL NOTES APPEARING IN THE PROPOSAL RELATIVE TO CORRUGATED METAL FORMS.
7. UNLESS OTHERWISE SHOWN, THE MINIMUM CONCRETE COVER FOR REINFORCING STEEL IN THE SUPERSTRUCTURE SHALL BE AS FOLLOWS:

BRIDGE SLAB - TOP OF SLAB	2"
BRIDGE SLAB - BOTTOM OF SLAB	1"
BRIDGE SLAB - EXTERIOR FACE	2-1/2"
EXTERIOR FACE OF PARAPET	2-3/4"
INTERIOR FACE OF PARAPET	2"

8. MAROON PRIMER, ITEM M18B, WILL NOT BE APPROVED FOR USE ON THIS CONTRACT.
9. FILLET WELDING ACROSS FLANGES WHICH CARRY TENSILE STRESSES SHALL ONLY BE PERFORMED WITH THE MINIMUM PREHEAT OF 200°F.
10. SAFETY WALKS SHALL NOT BE SCORED.

1. 03154 9

F.A.I. 81 OVER EAST COLVIN STREET

BRIDGE CROSS SECTION AND SUPERSTRUCTURE DETAIL

PREPARED AND RECOMMENDED BY LEONARD S. WEGMAN CO.
BY _____
N.Y.S. P.E. LIC. 23287 DATE 12-9-63

DRAWN BY: HC DB	CHECKED BY: MJA EF
REVIEWED BY:	DATE 12-9-63

LEONARD S. WEGMAN CO. ENGINEERS
235 EAST 45TH STREET, NEW YORK 17, N.Y.

SCALE AS NOTED
DWG. NO. J-4

TABLE - ITEM 582.05 M	
ELEMENT	QUANTITY (CM)
STEM	4.80
BACKWALL	0.35

TABLE - ITEM 11555.8198 M	
ELEMENT	QUANTITY (M)
BACKWALL	1.00

TABLE OF STRUCTURAL LIFTING * (JACKING LOADS)

LOCATION	ITEM	QTY (EA)	DL (KN)	LL+I (KN)	TOTAL (KN)
PED. 1-16 EXP.	585.02 M	16	167	282	449

* STRUCTURAL LIFTING SHALL BE IN PLACE PRIOR TO COMMENCING BEARING RESTORATION AND CONCRETE REPAIR

TABLE - ITEM 582.07 M	
ELEMENT	QUANTITY (SM)
BACKWALL	1.41

CONCRETE TABLE		
PEDESTAL	QUANTITY	ITEM NO.
9	0.32	555.09 M

FED ROAD REG. NO.	STATE	CONTRACT NO.	SHEET NO.	TOTAL SHEETS
1	N.Y.	D259742	557	788

INTERSTATE ROUTE 505, BURT STREET TO JEFFERSON STREET
BRIDGE REHABILITATION PROJECT (ELEMENT SPECIFIC)
VARIOUS BRIDGES ON INTERSTATES 81 & 690
CITY OF SYRACUSE
ONONDAGA COUNTY
P.I.N. 3804.66 B.I.N. 1031549

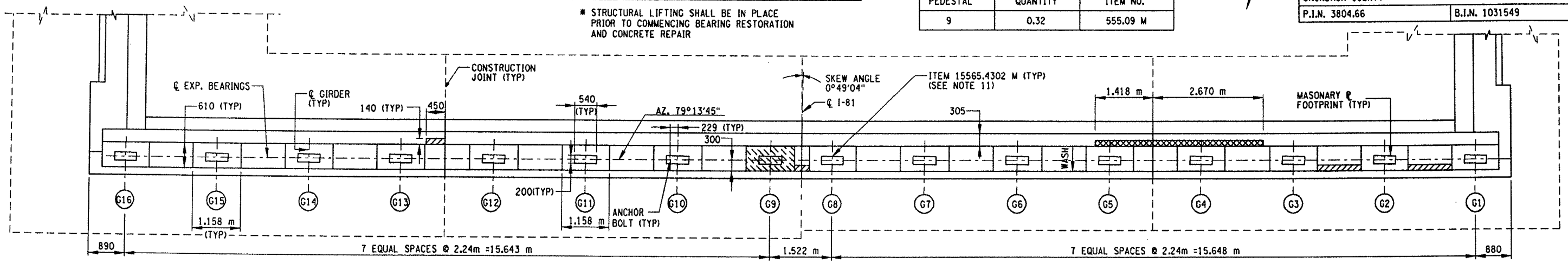

ASBESTOS NOTE:

ASBESTOS NOTES:

THERE IS ASBESTOS - CONTAINING SHEET PACKING LOCATED BETWEEN THE TOP OF THE BACKWALL AND THE BOTTOM OF DECK SLAB. REMOVAL COST SHALL BE INCLUDED IN THE UNIT PRICE BID FOR ITEM 210.9912 M (QUANTITY = 0.57 SM)

PLAN - SOUTH ABUTMENT

0.5 0 1 2 3 4 m

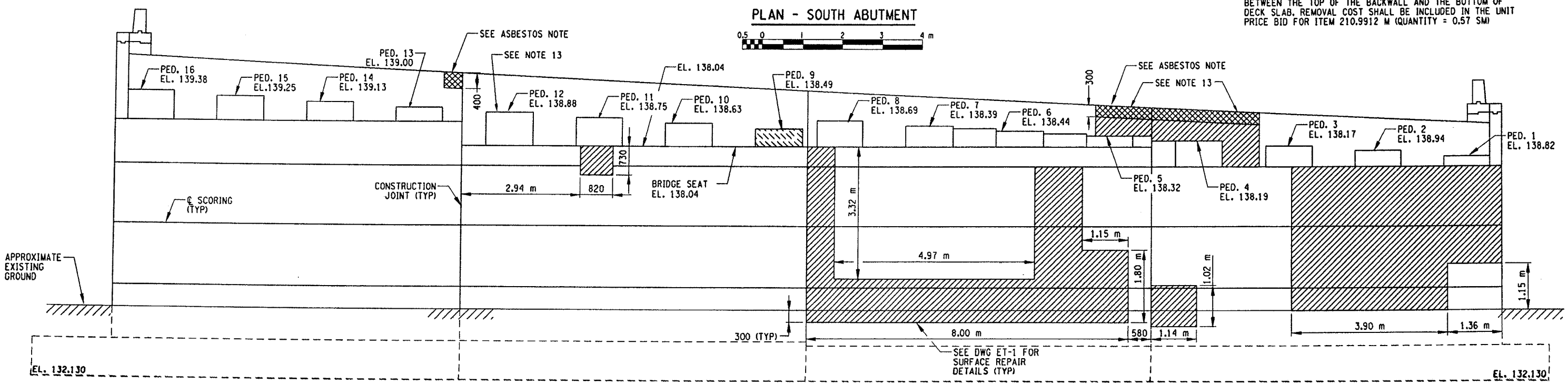

NOTES:

1. ALL AREAS SHOWN FOR CONCRETE REMOVAL ARE APPROXIMATE AND SHALL BE FIELD VERIFIED BY THE CONTRACTOR AND EIC.
2. CONCRETE REMOVAL TO LIMITS SHOWN INCLUDES SOUND CONCRETE AROUND THE PERIMETER OF THE DETERIORATED CONCRETE, A.O.B.E.
3. WHEN REMOVING EXISTING CONCRETE, SAWCUT 5 mm MIN. TO PRODUCE NEAT REMOVAL LINES. ANY COST TO BE INCLUDED IN THE BID PRICE FOR ITEM 582.05 M OR 582.07 M.
4. ELEVATIONS ARE GIVEN FOR REFERENCE ONLY.
5. REFER TO CONTRACT F.I.C. 64-7 FOR ORIGINAL CONSTRUCTION DETAILS.
6. FOR CONCRETE REPAIR DETAILS SEE DWG. NO. BR-1.
7. RESTORE TO ORIGINAL DIMENSIONS.
8. PEDESTALS NUMBERED FROM WEST TO EAST.
9. CRACKS IN BACKWALL AND STEM WILL BE REPAIRED AS ORDERED BY EIC BY INJECTION GROUTING METHOD UNDER ITEM 11555.8198 M.
10. STRUCTURAL LIFTING OPERATIONS FOR BEARING RESTORATION AND CONCRETE REPAIRS, ITEM 585.02 M - TYPE B (LIFTING FROM ABUTMENT SEAT) SEE DWG. NO. TSL-1.
11. PERFORM EXPANSION BEARING RESTORATION TO BEARING NOS. 1-16, (ITEM 15565.4302 M), SEE DWG NO. BR-5.
12. NO DECORATIVE FINISHES WILL BE INSTALLED UNDER THIS CONTRACT.
13. THE CONTRACTOR SHALL REMOVE AND REINSTALL THE END DIAPHRAGM AS NEEDED FOR ACCESS TO THIS REPAIR AREA LOCATED ON THE BACKWALL. THE COST TO BE INCLUDED UNDER ITEM 10564.11 M.

LIST OF ITEMS USED:

ITEM 210.9912 M - REMOVAL AND DISPOSAL OF MISC. ASBESTOS CONTAINING MATERIALS (BV12) (SM)
ITEM 580.01 M - REMOVAL OF STRUCTURAL CONCRETE (CM)
ITEM 555.09 M - CONCRETE FOR STRUCTURES, CLASS HP (CM)
ITEM 11555.8198 M - CRACK REPAIR (3 mm OR WIDER) BY INJECTION OF PORTLAND CEMENT GROUT (m) AS ORDERED BY EIC
ITEM 18559.1696 M - PROTECTIVE SEALING OF STRUCTURAL CONCRETE, (SM)
ITEM 582.05 M - REMOVAL OF STRUCTURAL CONCRETE REPLACEMENT WITH CLASS A CONCRETE (CM)
ITEM 582.07 M - REMOVAL OF STRUCTURAL CONCRETE REPLACEMENT WITH VERTICAL AND OVERHEAD PATCH MATERIAL (SM).
ITEM 15565.4302 M - BRIDGE BEARING RESTORATION (EA)
ITEM 585.02 M - STRUCTURAL LIFTING OPERATIONS - TYPE B - (EA) (LIFTING FROM ABUTMENT SEAT)
ITEM 10564.11 M - REMOVE, STORE AND RESET DIAPHRAGMS ON STRUCTURE (EA)

SOUTH ABUTMENT - ELEVATION

0.5 0 1 2 3 4 m

LEGEND:

AREA OF PROPOSED WORK; ITEM 582.05 M REMOVAL OF STRUCTURAL CONCRETE AT LEAST 40-mm BEHIND REINFORCEMENT REPLACE WITH CLASS A CONCRETE

ITEM 580.01 M - REMOVAL OF STRUCTURAL CONCRETE, (CM) AND ITEM 555.09 M - CONCRETE FOR STRUCTURES, CLASS HP (CM).

AREA OF PROPOSED WORK; ITEM 582.07 M REMOVAL OF STRUCTURAL CONCRETE-AT LEAST 40 mm BEHIND REINFORCEMENT REPLACE WITH VERTICAL AND OVERHEAD PATCH MATERIAL

C&S Engineers, Inc. SYRACUSE • BUFFALO • BINGHAMTON

B.I.N. 1031549

SPECIAL NOTE: ALL DIMENSIONS ARE SHOWN IN MILLIMETERS UNLESS OTHERWISE NOTED.

AS BUILT REVISIONS

SIGNATURE DATE

INTERSTATE 81
OVER
EAST COLVIN STREET

SOUTH ABUTMENT

STATE OF NEW YORK
DEPARTMENT OF TRANSPORTATION

FILENAME	REGION	DATE	DRAWING NO.
380466EB_A1A	3	OCT 2004	ST5-2

DESIGN SUPERVISOR PWW JOB MANAGER TAS DESIGNED BY LBO CHECKED BY DJW DRAFTED BY LBO ESTIMATED BY JRF CHECKED BY JRF

FILE NAME = bridge
DATE/TIME = 11/8/2004 11:46 PM
USER = devidv

FED ROAD REG. NO.	STATE	CONTRACT NO.	SHEET NO.	TOTAL SHEETS
1	N.Y.	D259742	559	788

INTERSTATE ROUTE 505, BURT STREET TO JEFFERSON STREET
BRIDGE REHABILITATION PROJECT (ELEMENT SPECIFIC)
VARIOUS BRIDGES ON INTERSTATES 81 & 690
CITY OF SYRACUSE
ONONDAGA COUNTY
P.I.N. 3804.66 B.I.N. 1031549

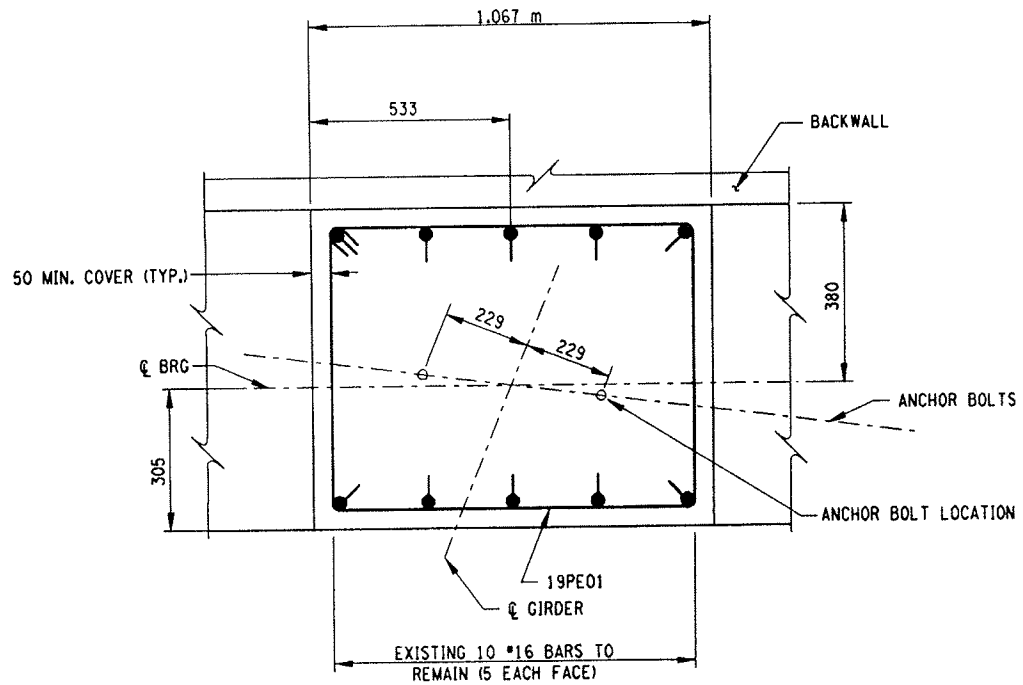

PLAN
N.T.S.

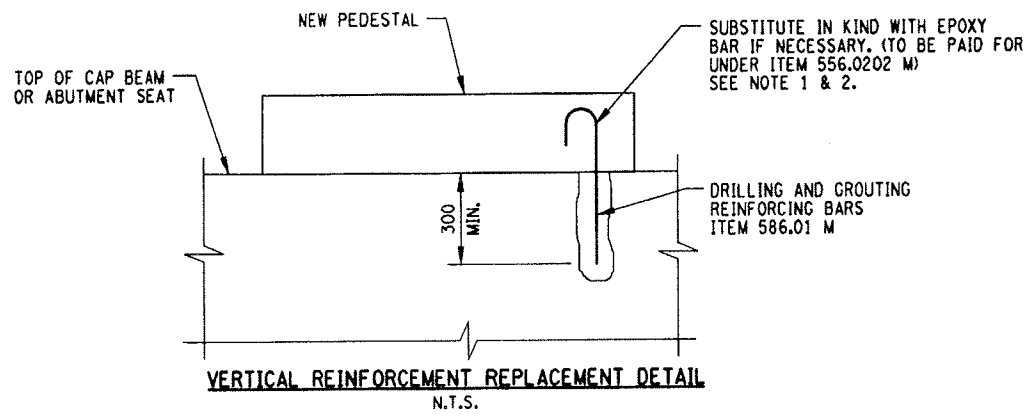

VERTICAL REINFORCEMENT REPLACEMENT DETAIL
N.T.S.

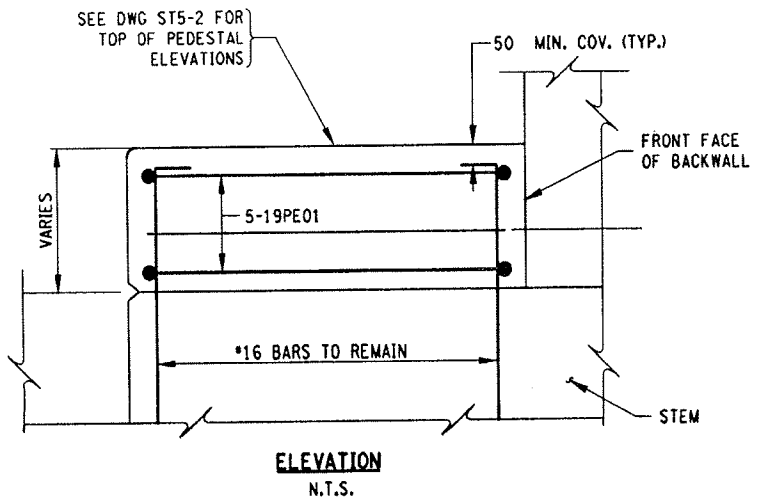

ELEVATION
N.T.S.

PEDESTAL DETAILS
N.T.S.
(SOUTH ABUTMENT PEDESTAL 9)

NOTES:

1. EXISTING VERTICAL REINFORCEMENT IN PEDESTALS SHALL REMAIN IN PLACE. IF THE VERTICAL REINFORCEMENT IS BROKEN OR DISLODGED FROM THE CONCRETE DURING CONCRETE REMOVAL OPERATIONS, THE CONTRACTOR SHALL REPLACE IN KIND AT NO ADDITIONAL COST TO THE STATE.
2. SEE BR-1 FOR WELD SPLICE REPAIR FOR VERTICAL REINFORCEMENT.
3. FOR ANCHOR BOLT DETAILS SEE DWG. NO. BR-5
4. MATCH ALL EXISTING PEDESTAL DIMENSIONS.
5. CHAMFER ALL EDGES OF PEDESTALS 25 mm.

DESIGN SUPERVISOR PWW JOB MANAGER TAS DESIGNED BY JRF CHECKED BY
DRAFTED BY MFL CHECKED BY
ESTIMATED BY LBO CHECKED BY TAS

FILE NAME = ENGNAME
DATE/TIME = 11/8/2006 11:46 PM
USER = davidw

B.I.N. 1031549

SPECIAL NOTE: ALL DIMENSIONS ARE SHOWN IN MILLIMETERS UNLESS OTHERWISE NOTED.

AS BUILT REVISIONS

SIGNATURE DATE

INTERSTATE 81
OVER
EAST COLVIN STREET

PEDESTAL DETAILS

STATE OF NEW YORK
DEPARTMENT OF TRANSPORTATION

C&S Engineers, Inc.
SYRACUSE • BUFFALO • BINGHAMTON

FILENAME	REGION	DATE	DRAWING NO.
380466EB_PD1	3	OCT 2004	ST5-4

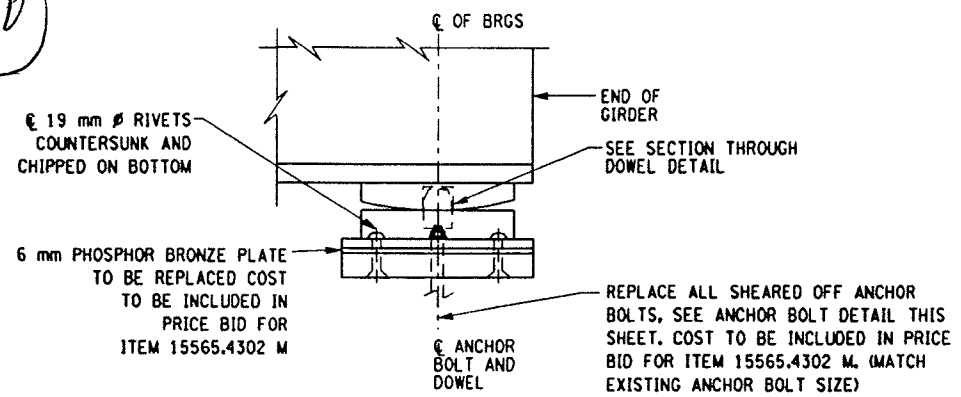

EXPANSION SIDE ELEVATION

N.T.S.

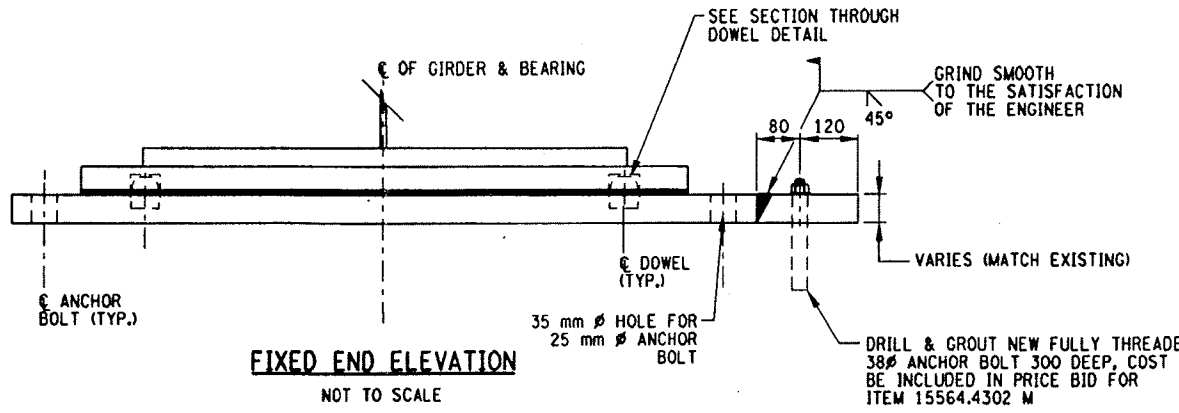

FIXED END ELEVATION

NOT TO SCALE

LOW STEEL FIXED BEARING DETAIL

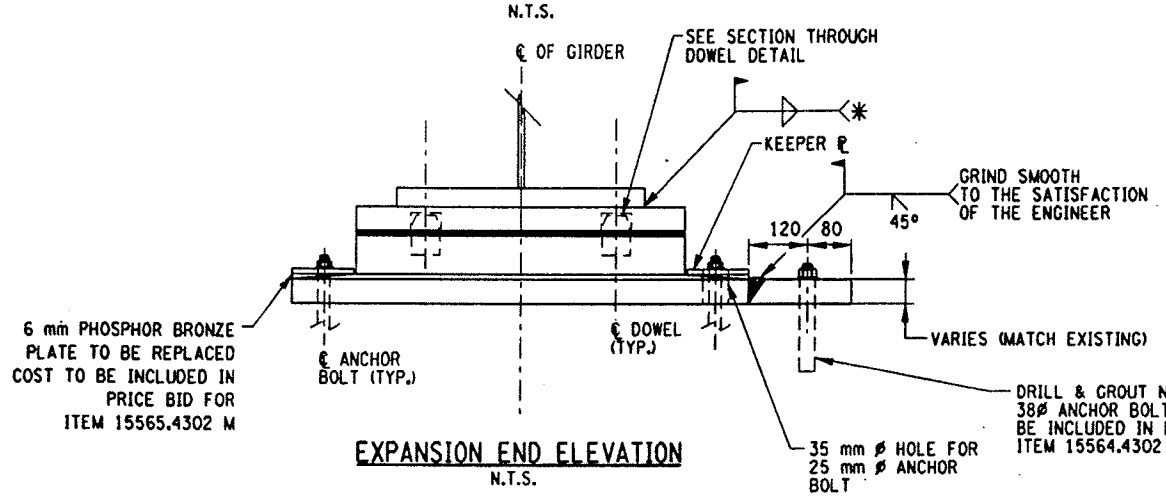

EXPANSION END ELEVATION

N.T.S.

LOW STEEL EXPANSION BEARING DETAILS

✳ SEE DRAWING BR-4 FOR WELD SIZE IF BEARING IS BEING RESET

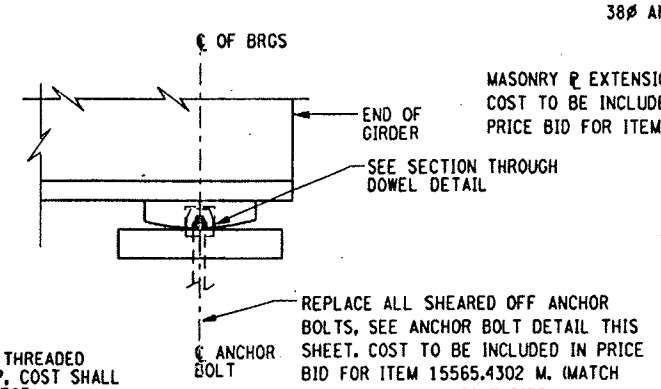

FIXED SIDE ELEVATION

NOT TO SCALE

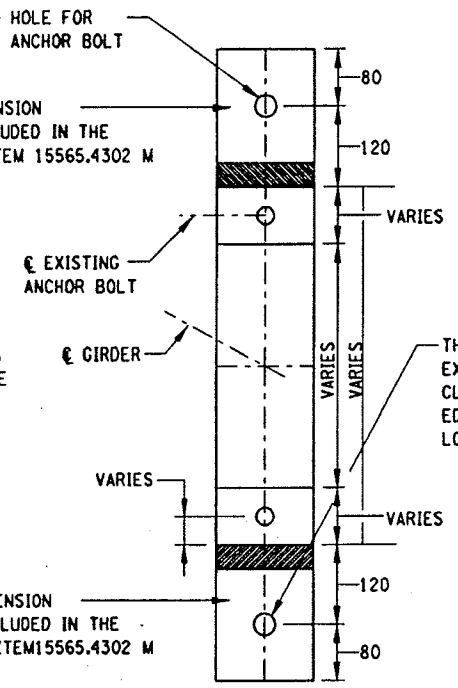

PLAN

NOT TO SCALE

THE CONTRACTOR SHALL PLACE HOLE IN MASONARY ℄ EXTENSION AT LOCATION WHERE A 200mm MINIMUM CLEARANCE FROM THE ℄ OF THE ANCHOR BOLT TO THE EDGE OF THE PEDESTAL CAN BE ACHIEVED. THIS LOCATION SHALL BE APPROVED BY THE ENGINEER.

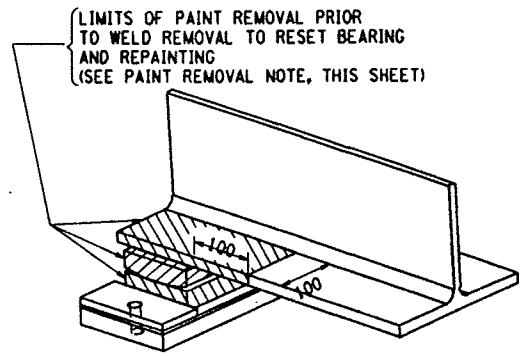

PAINT REMOVAL DETAIL

NOT TO SCALE

PAINT REMOVAL NOTE:

1. IN CONJUNCTION WITH BEARING RESTORATION THE USE OF ITEM 571.01NNNN M - TREATMENT & DISPOSAL OF PAINT REMOVAL WASTE AND ITEM 570.09NNNN M - ENVIRONMENTAL GROUND PROTECTION SHALL ALSO BE INCORPORATED DURING THE PAINT REMOVAL OPERATIONS.
2. ALL NEW PARTS INSTALLED UNDER BEARING RESTORATIONS SHALL BE INCLUDED IN THE UNIT PRICE BID FOR ITEM 15565.4302 M. REPLACEMENT MATERIALS SHALL BE ASTM A36 EXCEPT AS NOTED.
3. ALL SURFACES SHALL BE CLEANED AND LUBRICATED TO ENSURE FREE MOVEMENT, ITEM 15565.4302 M.

BRIDGE BEARING RESTORATION NOTES:

EXPANSION BEARING RESTORATION WORK (ITEM 15565.4302 M) SHALL INCLUDE THE FOLLOWING:

(1) STRUCTURAL LIFTING UNDER LIVELOAD (PAID FOR UNDER ITEM 585.0X M)
(2) REPLACEMENT OF BRONZE EXP. BEARING ℄
(3) REPLACEMENT OF SHEARED ANCHOR BOLTS AS NEEDED (IF PEDESTAL IS NOT SCHEDULED FOR REPLACEMENT, THE CONTRACTOR HAS TWO OPTIONS:
  1. REMOVE TOP 150 mm OF CONCRETE PEDESTAL AND INSTALL NEW ANCHOR BOLTS WIDEN MASONRY PLATE AS SHOWN IN THE DETAILS (ITEM 580.01 M AND ITEM 555.09 M)
(4) RESET BEARING (IF NEEDED BY CUTTING SOLE ℄ WELDS FROM GIRDER FLANGE & REWELDING)
(5) COMMERCIAL BLAST CLEAN TO NEAR WHITE FINISH
(6) MAINTENANCE PAINTING
(7) BEARING LUBRICATION

FIXED BEARING RESTORATION WORK (ITEM 15565.4302 M) SHALL INCLUDE THE FOLLOWING:

(1) STRUCTURAL LIFTING UNDER LIVELOAD (PAID FOR UNDER ITEM 585.0X M)
(2) REPLACEMENT OF SHEARED ANCHOR BOLTS AS NEEDED (IF PEDESTAL IS NOT SCHEDULED FOR REPLACEMENT, THE CONTRACTOR HAS TWO OPTIONS:
  1. REMOVE TOP 150mm OF CONCRETE PEDESTAL AND INSTALL NEW ANCHOR BOLTS WIDEN MASONRY PLATE AS SHOWN IN THE DETAILS (ITEM 580.01 M AND ITEM 555.09 M)
(3) COMMERCIAL BLAST CLEAN TO NEAR WHITE FINISH
(4) MAINTENANCE PAINTING
(5) BEARING LUBRICATION
NOTE: FIXED BEARINGS SHALL NOT BE DISASSEMBLED UNLESS A.O.B.E.

IF GRINDING REDUCES THE BEARING HEIGHT THEN SHIM DEVICES APPROVED BY THE E.I.C. TO OBTAIN THE ORIGINAL HEIGHT SHALL BE PROVIDED UNDER ITEM 15565.4302 M.

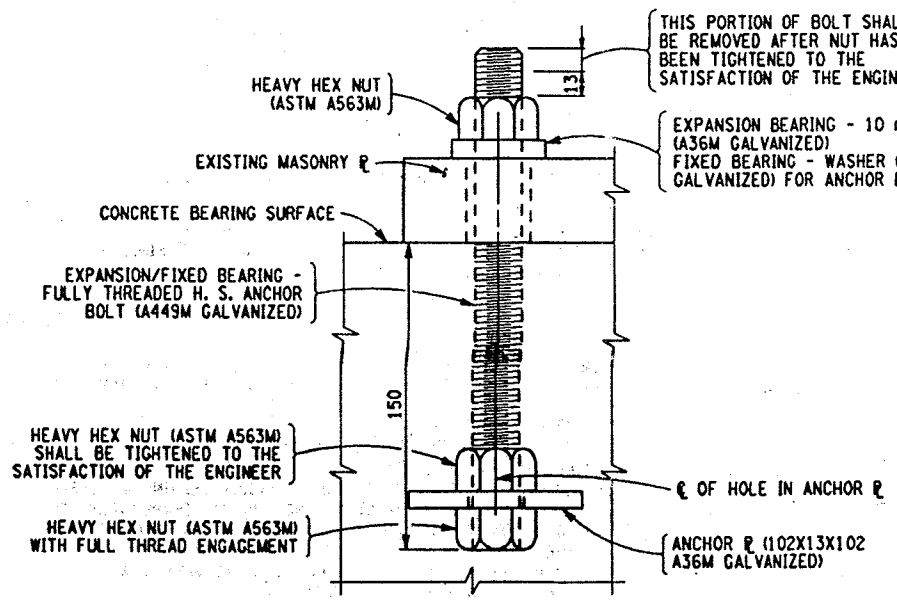

ANCHOR BOLT DETAIL

NOT TO SCALE

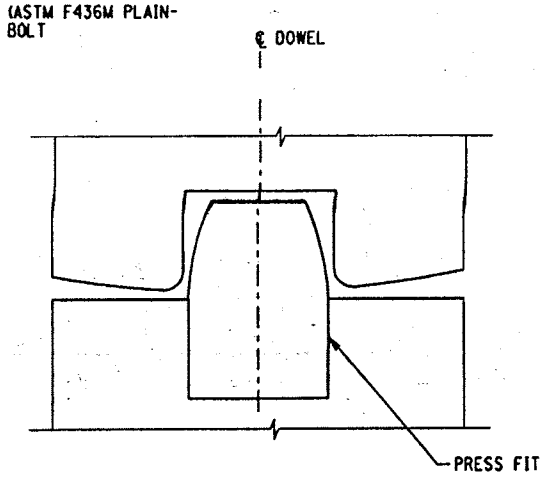

SECTION THROUGH DOWEL DETAIL

NOT TO SCALE

LIST OF ITEMS USED:

ITEM 15565.4302 M - BRIDGE BEARING RESTORATION (EA)

SPECIAL NOTE: ALL DIMENSIONS ARE SHOWN IN MILLIMETERS UNLESS OTHERWISE NOTED.

FED ROAD REG. NO.	STATE	CONTRACT NO.	SHEET NO.	TOTAL SHEETS
1	N.Y.	D259742	767	788

BRIDGE REHABILITATION PROJECT (ELEMENT SPECIFIC)
VARIOUS BRIDGES ON INTERSTATES 81 & 690
CITY OF SYRACUSE
ONONDAGA COUNTY
P.I.N. 3804.66

AS BUILT REVISIONS

SIGNATURE ____ DATE ____

INTERSTATE 81/690
BRIDGE REHABILITATION PROJECT

LOW STEEL BEARING RESTORATION DETAILS

STATE OF NEW YORK
DEPARTMENT OF TRANSPORTATION

FILENAME	REGION	DATE	DRAWING NO.
380466AA_M1A	3	OCT 2004	BR-5

C&S Engineers, Inc. SYRACUSE • BUFFALO • BINGHAMTON

DESIGN SUPERVISOR PWW — JOB MANAGER TAS — DESIGNED BY ____ — DRAFTED BY ____ — ESTIMATED BY ____ — CHECKED BY ____

FILE NAME = bar0.tif
DATE/TIME = 11/8/2004
USER = dewdw

DESIGN SUPERVISOR OPP JOB MANAGER SDK ESTIMATED BY GDH DRAFTED BY KWR CHECKED BY

(9)

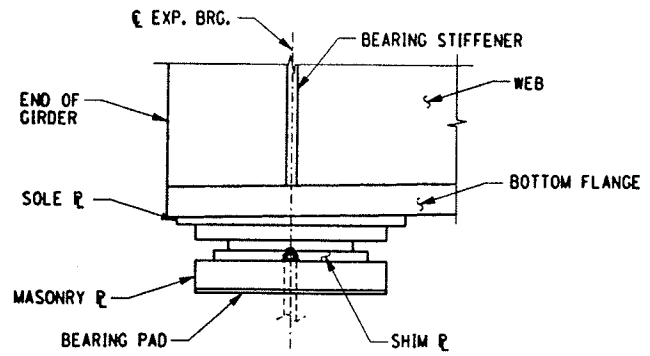

EXPANSION SIDE ELEVATION
N.T.S.

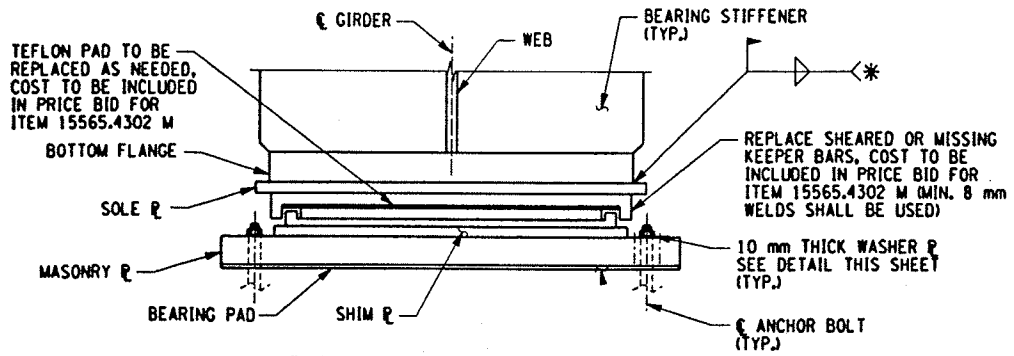

EXPANSION END ELEVATION
N.T.S.

MULTI-ROTATIONAL EXPANSION BEARING DETAILS

* SEE DRAWING BR-4 FOR WELD SIZE IF BEARING IS BEING RESET

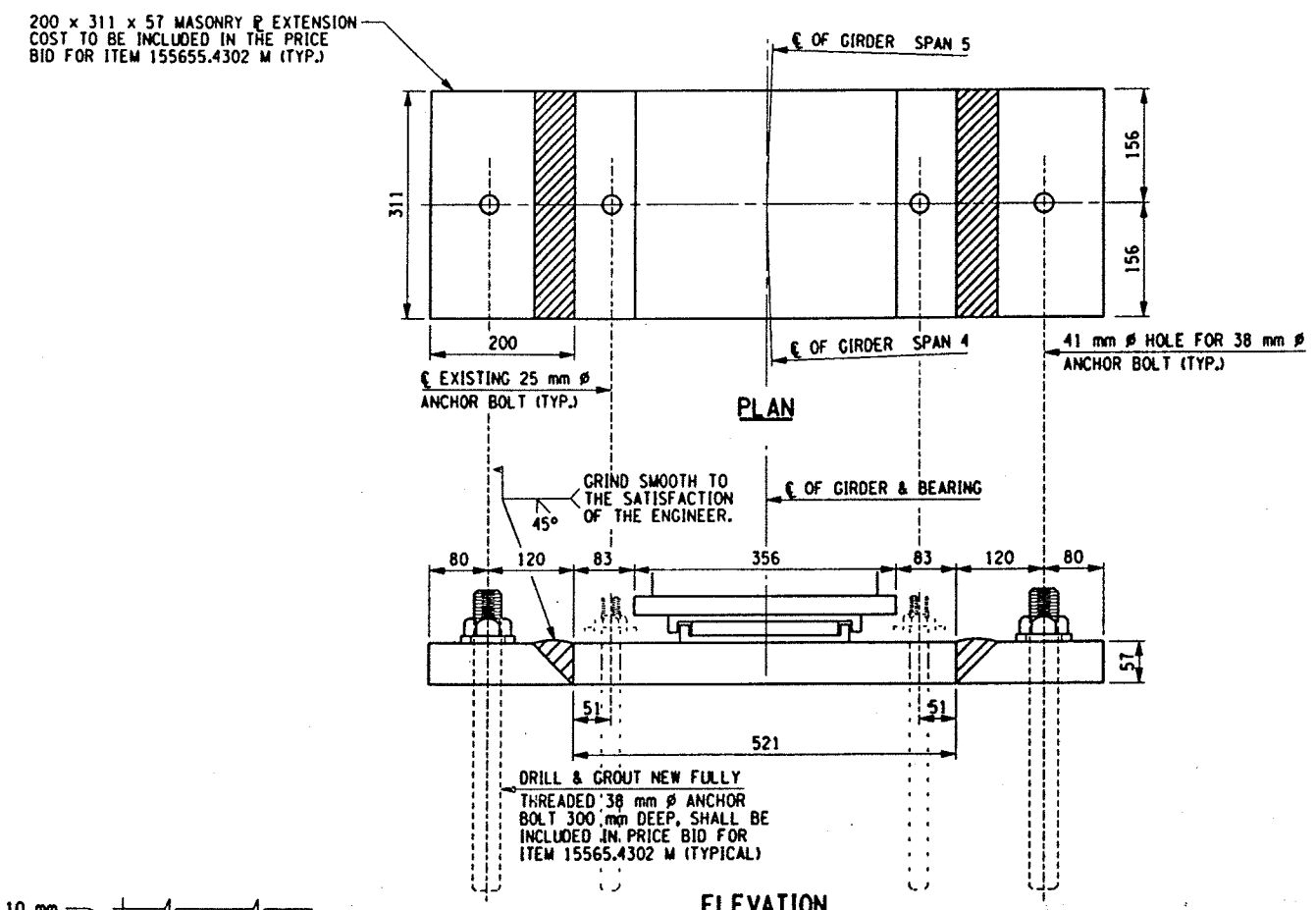

ELEVATION



MASONRY ℄ EXTENSION DETAILS
BIN 107134A - PIER 4

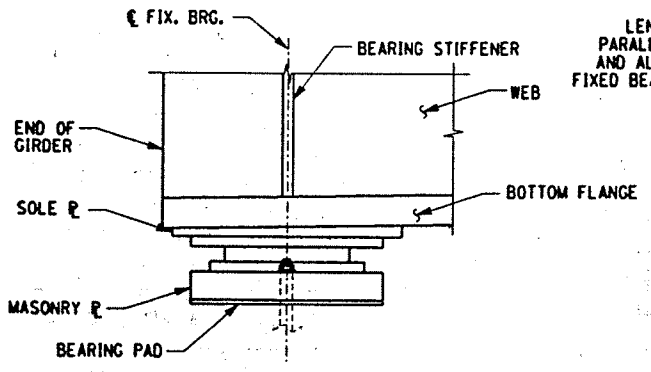

FIXED SIDE ELEVATION
N.T.S.

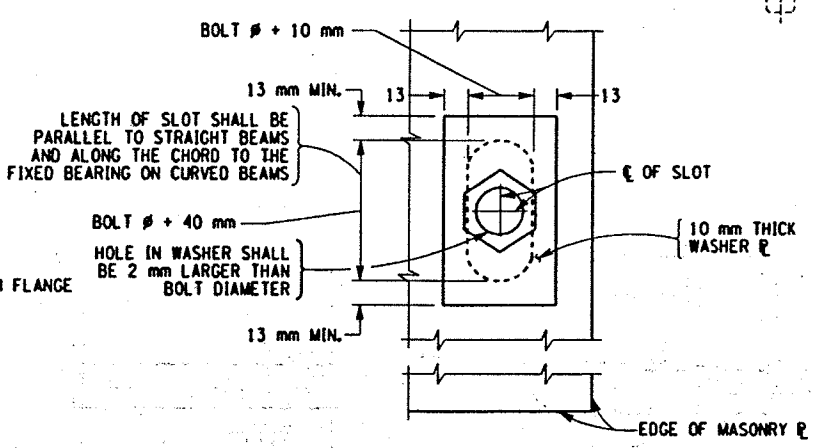

WASHER PLATE DETAIL
NOT TO SCALE

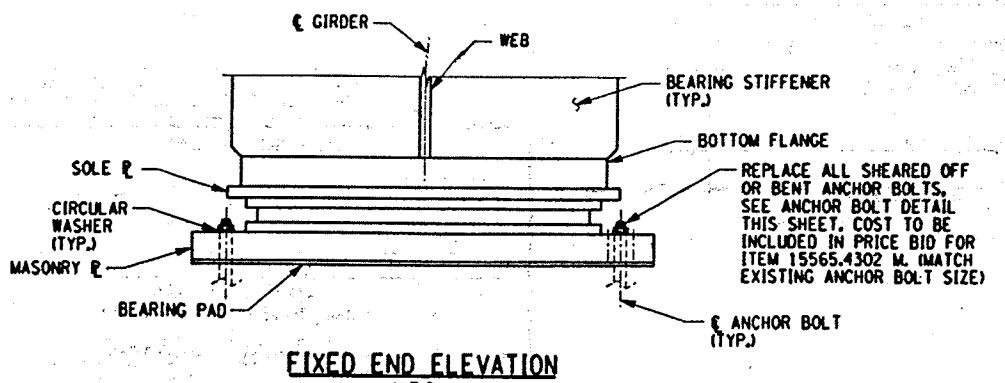

FIXED END ELEVATION
N.T.S.

MULTI-ROTATIONAL FIXED BEARING DETAILS

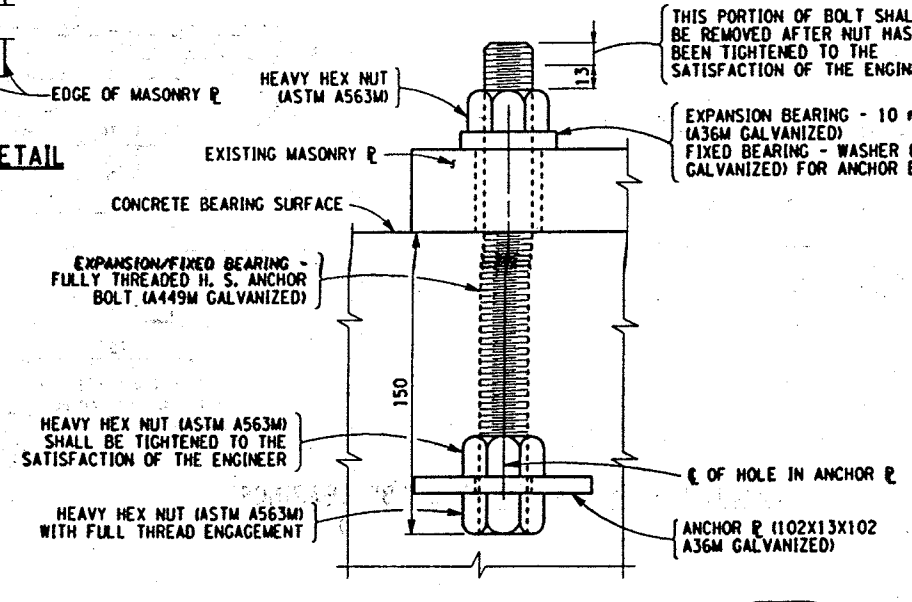

ANCHOR BOLT DETAIL
NOT TO SCALE

POPLI CONSULTING ENGINEERS & SURVEYORS

FED ROAD REG. NO.	STATE	CONTRACT NO.	SHEET NO.	TOTAL SHEETS
1	N.Y.	D259742	770	788

BRIDGE REHABILITATION PROJECT (ELEMENT SPECIFIC)
VARIOUS BRIDGES ON INTERSTATES 81 & 690
CITY OF SYRACUSE
ONONDAGA COUNTY
P.I.N. 3804.66 | B.I.N.

BRIDGE BEARING RESTORATION NOTES:

1. EXPANSION BEARING RESTORATION WORK (ITEM 15565.4302 M) SHALL INCLUDE THE FOLLOWING:
   (1) STRUCTURAL LIFTING UNDER LIVE LOAD (PAID FOR UNDER ITEM 585.0X M)
   (2) REPLACEMENT OF TEFLON PAD (IF NEEDED)
   (3) REPLACEMENT OF SHEARED ANCHOR BOLTS AS NEEDED (IF PEDESTAL IS NOT SCHEDULED FOR REPLACEMENT, REMOVE TOP 150 mm OF CONCRETE PEDESTAL, ITEM 580.01 M AND ITEM 555.09 M)
   (4) RESET BEARING (IF NEEDED BY CUTTING SOLE ℄ WELDS FROM GIRDER FLANGE & REWELDING)
   (5) MAINTENANCE BLAST CLEAN TO REMOVE ALL LOOSE MATERIALS
   (6) BEARING LUBRICATION
2. FIXED BEARING RESTORATION WORK (ITEM 15565.4302 M) SHALL INCLUDE THE FOLLOWING:
   (1) STRUCTURAL LIFTING UNDER LIVE LOAD (PAID FOR UNDER ITEM 585.0X M)
   (2) REPLACEMENT OF SHEARED ANCHOR BOLTS OR NUTS AS NEEDED (IF PEDESTAL IS NOT SCHEDULED FOR REPLACEMENT, REMOVE TOP 150 mm OF CONCRETE PEDESTAL, ITEM 580.01 M AND ITEM 555.09 M)
   (3) MAINTENANCE BLAST CLEAN TO REMOVE ALL LOOSE MATERIALS
   (4) BEARING LUBRICATION
   NOTE: FIXED BEARINGS SHALL NOT BE DISASSEMBLED UNLESS A.O.B.E.

NOTES:

1. IN CONJUNCTION WITH BEARING RESTORATION THE USE OF ITEM 571.01NNNN M - TREATMENT & DISPOSAL OF PAINT REMOVAL WASTE AND ITEM 570.09NNNN M - ENVIRONMENTAL GROUND PROTECTION SHALL ALSO BE INCORPORATED DURING THE CLEANING OPERATIONS.
2. ALL NEW PARTS INSTALLED UNDER BEARING RESTORATIONS SHALL BE INCLUDED IN THE UNIT PRICE BID FOR ITEM 15565.4302 M. REPLACEMENT MATERIALS SHALL BE ASTM A588 EXCEPT AS NOTED.
3. ALL SURFACES SHALL BE CLEANED AND LUBRICATED TO ENSURE FREE MOVEMENT, ITEM 15565.4302 M.
4. ALL WELDING SHALL BE DONE IN ACCORDANCE WITH THE NEW YORK STATE STEEL CONSTRUCTION MANUAL.

LIST OF ITEMS USED:

ITEM 15565.4302 M - BRIDGE BEARING RESTORATION (EA)

SPECIAL NOTE: ALL DIMENSIONS ARE SHOWN IN MILLIMETERS UNLESS OTHERWISE NOTED.

AS BUILT REVISIONS

SIGNATURE DATE

INTERSTATE 81/690
BRIDGE REHABILITATION PROJECT

MULTI-ROTATIONAL BEARING RESTORATION DETAILS

STATE OF NEW YORK
DEPARTMENT OF TRANSPORTATION

FILENAME	REGION	DATE	DRAWING NO.
380466AA_M4A	3	OCT. 2004	BR-8

FED ROAD REG. NO.	STATE	CONTRACT NO.	SHEET NO.	TOTAL SHEETS
1	N.Y.	D259742	762	788

INTERSTATE ROUTE 505, 570 AND 571

BRIDGE REHABILITATION PROJECT (ELEMENT SPECIFIC)

VARIOUS BRIDGES ON INTERSTATES 81 & 690

CITY OF SYRACUSE

ONONDAGA COUNTY

P.I.N. 3804.66 | B.I.N.

NOTES

1. REFER TO THE HIGHWAY STANDARD SHEETS M670-1, M670-2 AND M670-3 FOR MORE DETAILS OF THE PROPOSED LIGHT STANDARDS AND ARMS.
2. ONCE ALL OF THE PROPOSED CONDUIT IS IN PLACE, NIAGARA MOHAWK WILL INSTALL ALL WIRING NECESSARY TO POWER THE CIRCUITS.

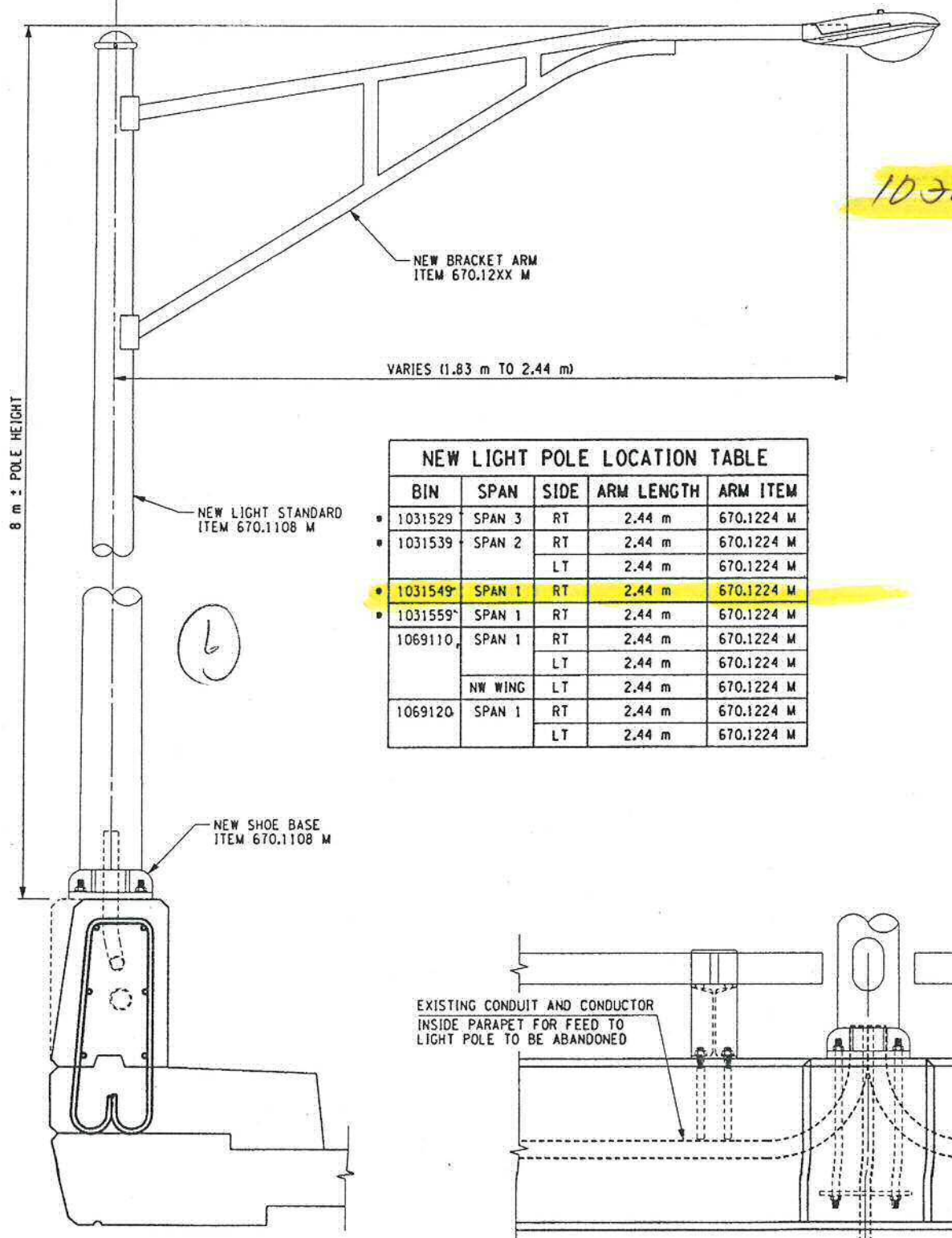

NEW LIGHT POLE DETAIL

(DETAIL FOR PARAPET INSTALLATION SHOWN, SIDEWALK DETAIL SIMILAR)

NEW LIGHT POLE LOCATION TABLE

BIN	SPAN	SIDE	ARM LENGTH	ARM ITEM
• 1031529	SPAN 3	RT	2.44 m	670.1224 M
• 1031539	SPAN 2	RT	2.44 m	670.1224 M
		LT	2.44 m	670.1224 M
• 1031549	SPAN 1	RT	2.44 m	670.1224 M
• 1031559	SPAN 1	RT	2.44 m	670.1224 M
1069110	SPAN 1	RT	2.44 m	670.1224 M
		LT	2.44 m	670.1224 M
	NW WING	LT	2.44 m	670.1224 M
1069120	SPAN 1	RT	2.44 m	670.1224 M
		LT	2.44 m	670.1224 M

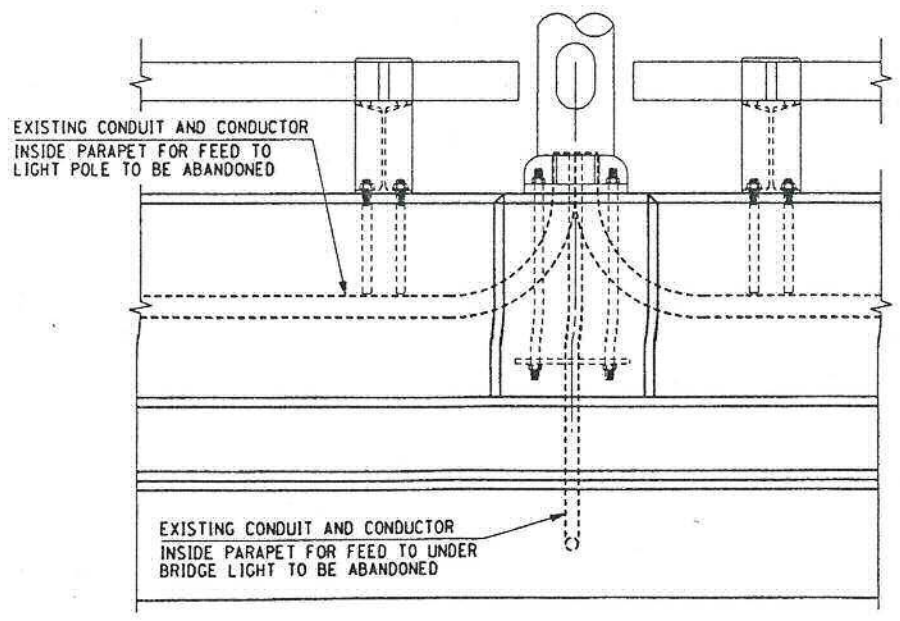

EXISTING ELEVATION @ LIGHT POLE (BINS 1031529, 1031539 & 1031549)

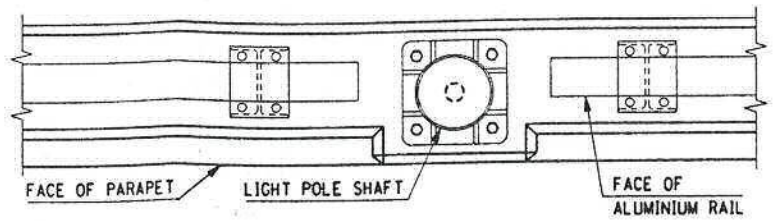

PLAN VIEW @ NEW LIGHT POLE

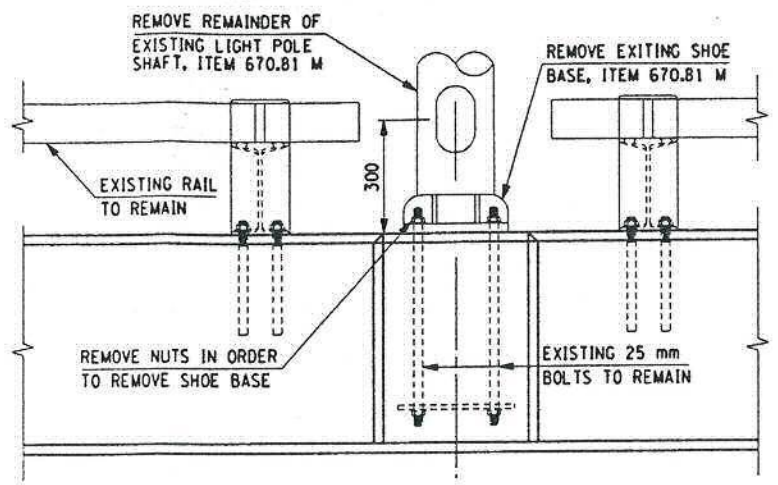

EXISTING ELEVATION @ LIGHT POLE

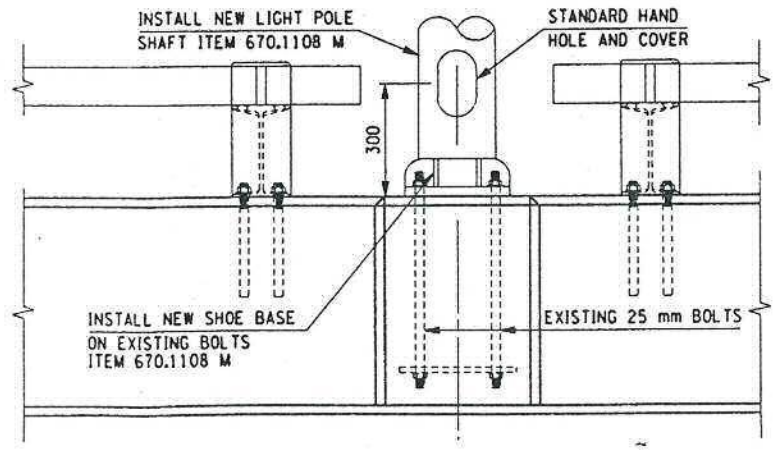

PROPOSED ELEVATION @ LIGHT POLE

ELECTRICAL WIRING NOTE:

THE CONTRACTOR IS RESPONSIBLE FOR ENSURING THAT THE WIRE FOR THE LIGHT POLES IS IN WORKING ORDER TO THE BASE OF THE POLE. WIRING FOR THE POLES AND INSTALLATION OF THE LUMINAIRES WILL BE PERFORMED BY NIAGARA MOHAWK ONCE ALL POLES ARE IN THEIR POSTIONS AND THE PARAPET HAS BEEN REPLACED.

• AT THESE LOCATIONS PARAPET IS BEING REPAIRED OR REPLACED UNDER THE NEW LIGHT POLES. FOR DETAILS OF PARAPET REPLACEMENT IN THESE LOCATIONS SEE SPECIFIC STRUCTURAL DRAWINGS.

SPECIAL NOTE: ALL DIMENSIONS ARE SHOWN IN MILLIMETERS UNLESS OTHERWISE NOTED.

AS BUILT REVISIONS

SIGNATURE _____ DATE _____

INTERSTATE 81/690
REHABILITATION PROJECT

CONDUIT RELOCATION DETAILS
LIGHT STANDARD REPLACEMENT DETAILS

STATE OF NEW YORK
DEPARTMENT OF TRANSPORTATION

POPLI CONSULTING ENGINEERS & SURVEYORS

FILENAME	REGION	DATE	DRAWING NO.
380466B_M4A	3	OCT. 2004	CD-16

DESIGN SUPERVISOR UPP | JOB MANAGER SDK | DESIGNED BY KWR | CHECKED BY SDK | ESTIMATED BY KWR | DRAFTED BY KWR | CHECKED BY SDK

FED ROAD REG. NO.	STATE	CONTRACT NO.	SHEET NO.	TOTAL SHEETS
1	N.Y.	D259742	560A1	788

BRIDGE REHABILITATION PROJECT (ELEMENT SPECIFIC)
VARIOUS BRIDGES ON INTERSTATES 81 & 690
CITY OF SYRACUSE
ONONDAGA COUNTY
P.I.N. 3804.66 B.I.N. 1031549

"THIS SHEET SUPERSEDES SHEET 560"

09/16/2017

NOTES:

1. THE ALUMINUM HANDRAIL MAY BE TEMPORARILY SUPPORTED DURING REMOVAL OPERATIONS OR IT MAY BE REMOVED AND STORED UNTIL THE PARAPET WORK IS COMPLETED. TREATMENT OF THE HANDRAIL TO BE INCLUDED IN UNIT PRICE BID FOR ITEM 580.01 M.
2. EXISTING CONDUIT TO BE RELOCATED TO OUTSIDE OF FASCIA. SEE DWG. NO. CD-3 FOR DETAILS.
3. THE CONTRACTOR SHALL USE A CALCIUM NITRITE BASED CORROSION INHIBITOR FROM THE DEPARTMENTS APPROVED LIST AT A RATE OF 27 LITERS PER CUBIC METER. COST TO BE INCLUDED IN ITEM 555.09 M.

TABLE - ITEM 555.09 M	
ELEMENT	QUANTITY (CM)
WEST PARAPET	0.70
EAST PARAPET	1.24

LEGEND:

AREA OF PROPOSED WORK
ITEM 580.01 M - REMOVAL OF STRUCTURAL CONCRETE
ITEM 555.09 M - CONCRETE FOR STRUCTURES, CLASS HP (SEE NOTE 3)

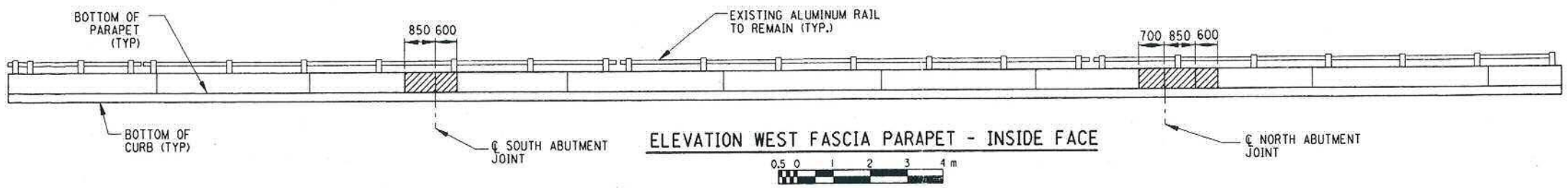

ELEVATION WEST FASCIA PARAPET - INSIDE FACE

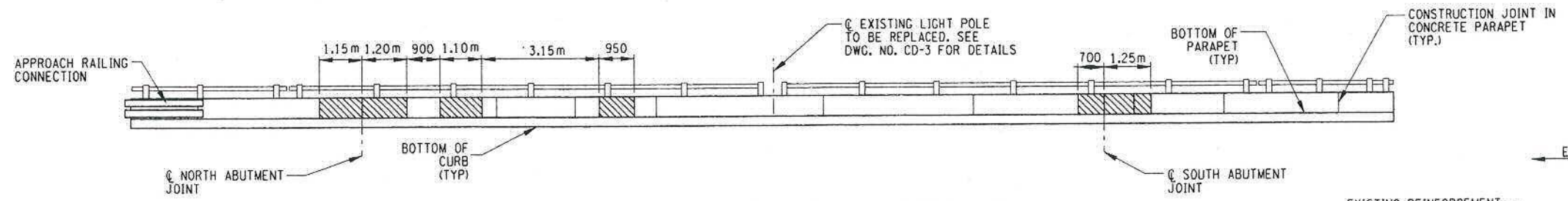

ELEVATION EAST FASCIA PARAPET - INSIDE FACE

0.5 0 1 2 3 4 m

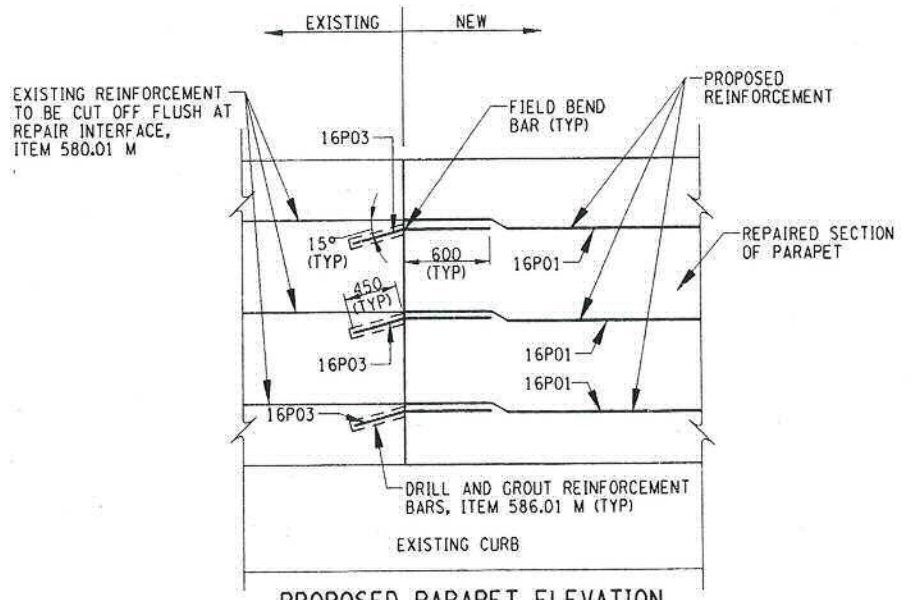

PROPOSED PARAPET ELEVATION
NTS

NOTE:
VERTICAL REINFORCEMENT NOT SHOWN FOR CLARITY

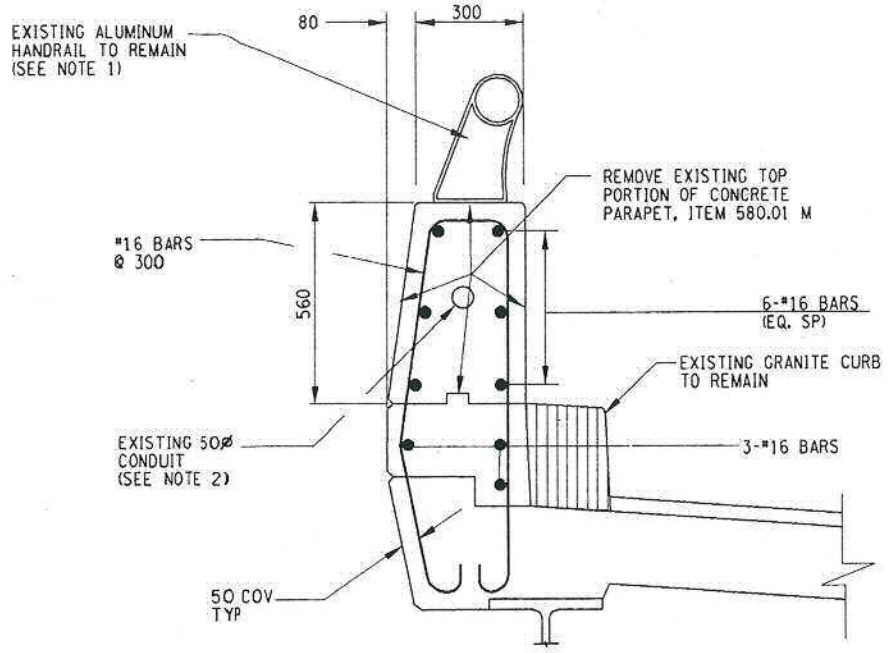

EXISTING PARAPET SECTION
NTS

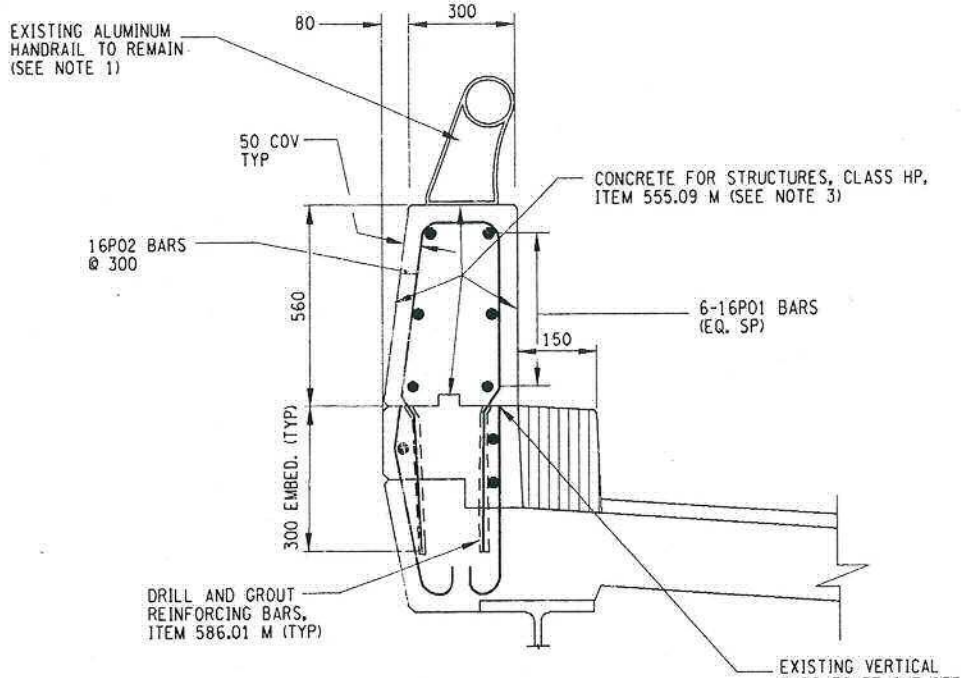

PROPOSED PARAPET SECTION
NTS

1031549

38/60

C&S Engineers, Inc. SYRACUSE • BUFFALO • BINGHAMTON

SPECIAL NOTE: ALL DIMENSIONS ARE SHOWN IN MILLIMETERS UNLESS OTHERWISE NOTED.

B.I.N. 1031549

AS BUILT REVISIONS

SIGNATURE DATE

INTERSTATE 81
OVER
EAST COLVIN STREET

CONCRETE PARAPET REPAIR DETAILS

STATE OF NEW YORK
DEPARTMENT OF TRANSPORTATION

FILENAME	REGION	DATE	DRAWING NO.
380466_PR2_A1	3	DEC 2004	ST5-5

DESIGN SUPERVISOR PWW JOB MANAGER TAS DESIGNED BY LBO CHECKED BY
DRAFTED BY DJW CHECKED BY
ESTIMATED BY JRF CHECKED BY JRF

FILE NAME = L:\HB\1502201\Phase 2 Bridge Plans\REVISIONS\380466_PR2_A1.dgn
DATE/TIME = 12/20/2004 8:42:36 AM
USER = davidw

BIN: 1031549
I-81/ East Colvin Street

BEGIN ABUTMENT DETERRIORATION SKETCH
LEFT SIDE
NOT TO SCALE

DATE: 04/01/2014

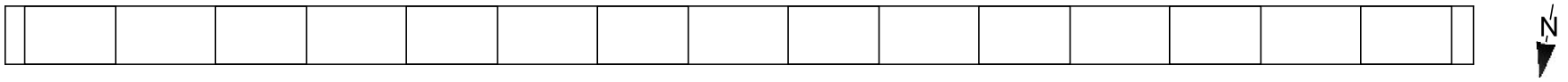

P8 P7 P6 P5 P4 P3 P2 P1

PLAN

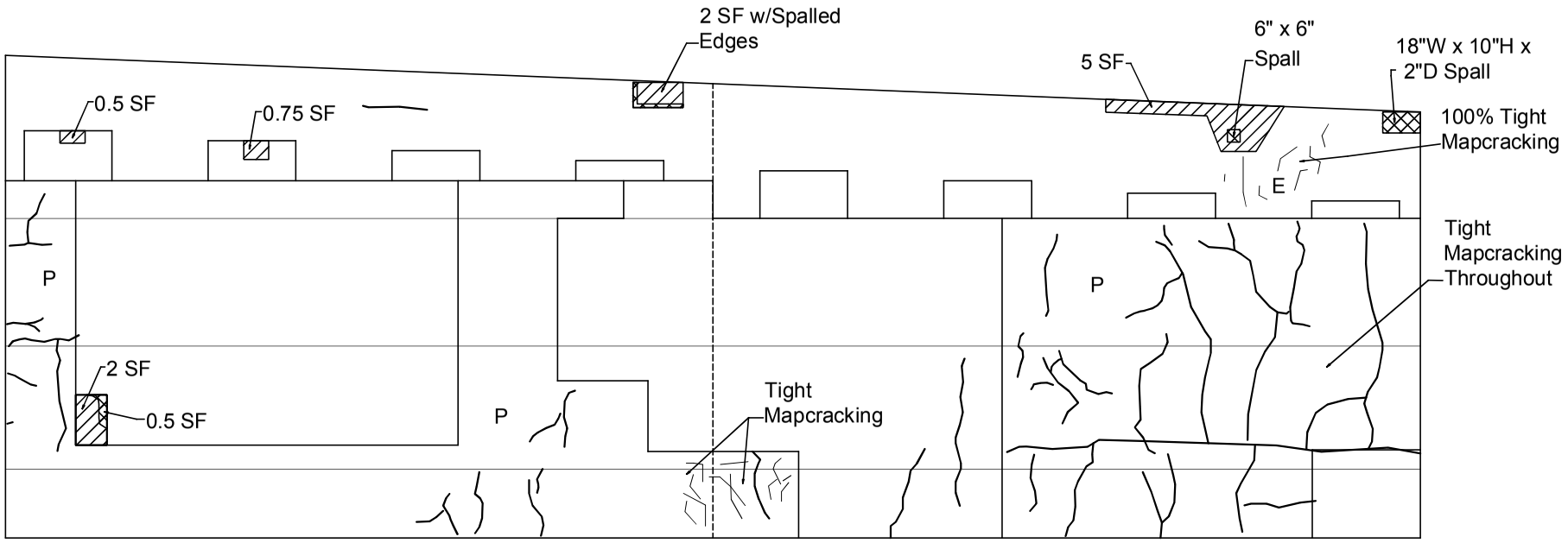

ELEVATION

LEGEND			
Hollow Concrete	P Patch	Spall	
Crack	Hairline Crack		

BIN: 1031549
I-81/ East Colvin Street

BEGIN ABUTMENT DETERRIORATION SKETCH
RIGHT SIDE
NOT TO SCALE

DATE: 04/01/2014



PLAN

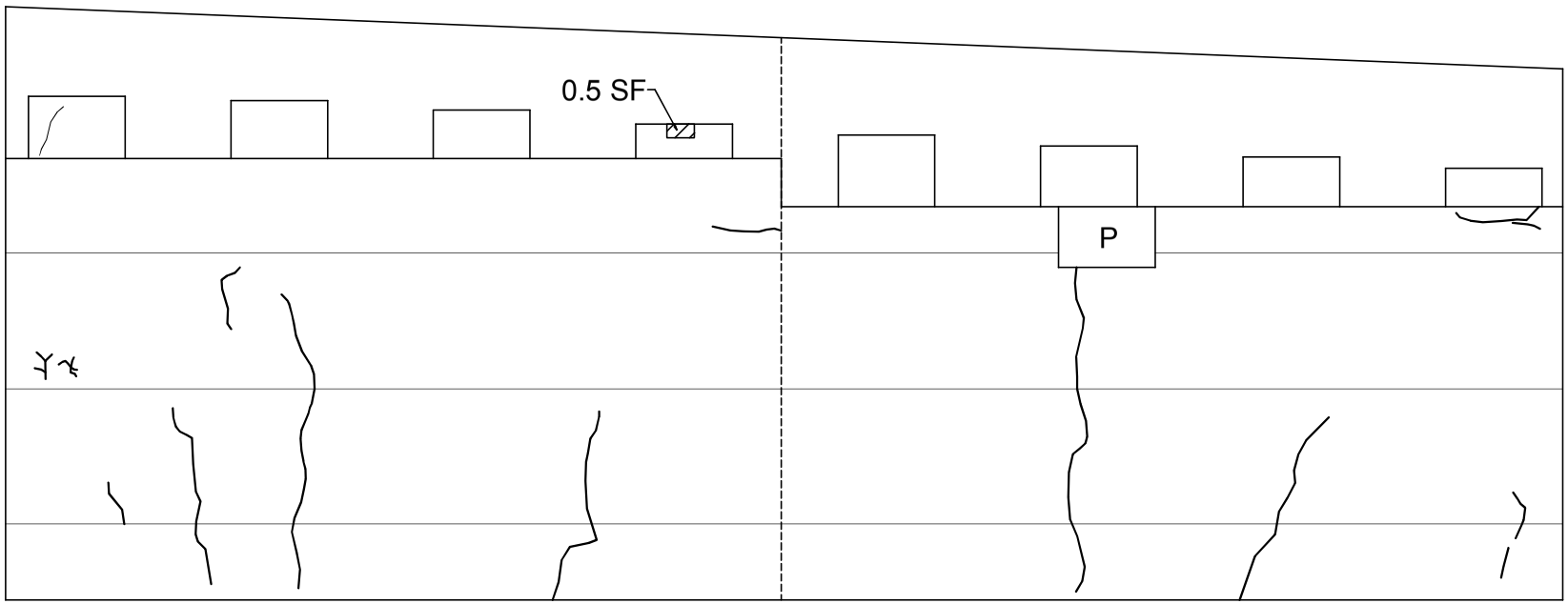

ELEVATION

LEGEND			
	Hollow Concrete	P	Patch
	Crack		Hairline Crack

BIN: 1031549
I-81/ East Colvin Street

END ABUTMENT DETERRIORATION SKETCH
LEFT SIDE

NOT TO SCALE

DATE: 04/01/2014
SHEET 1 OF 2

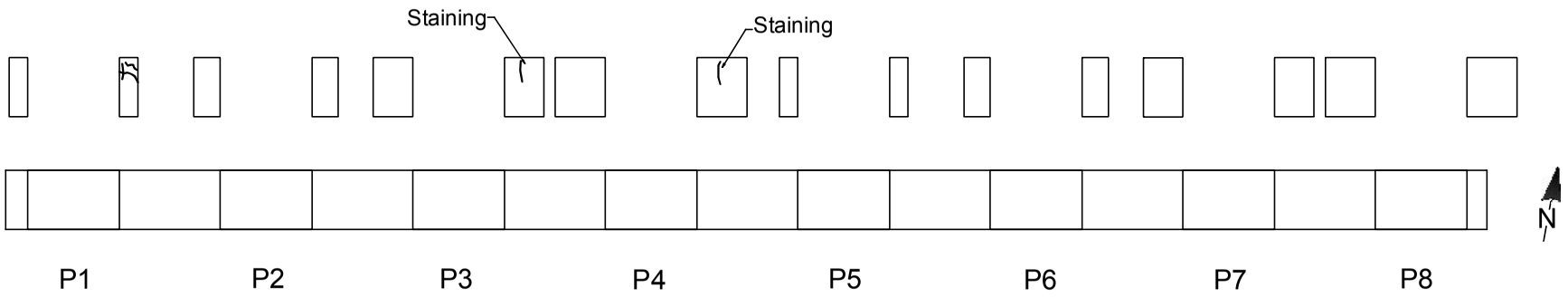

PLAN

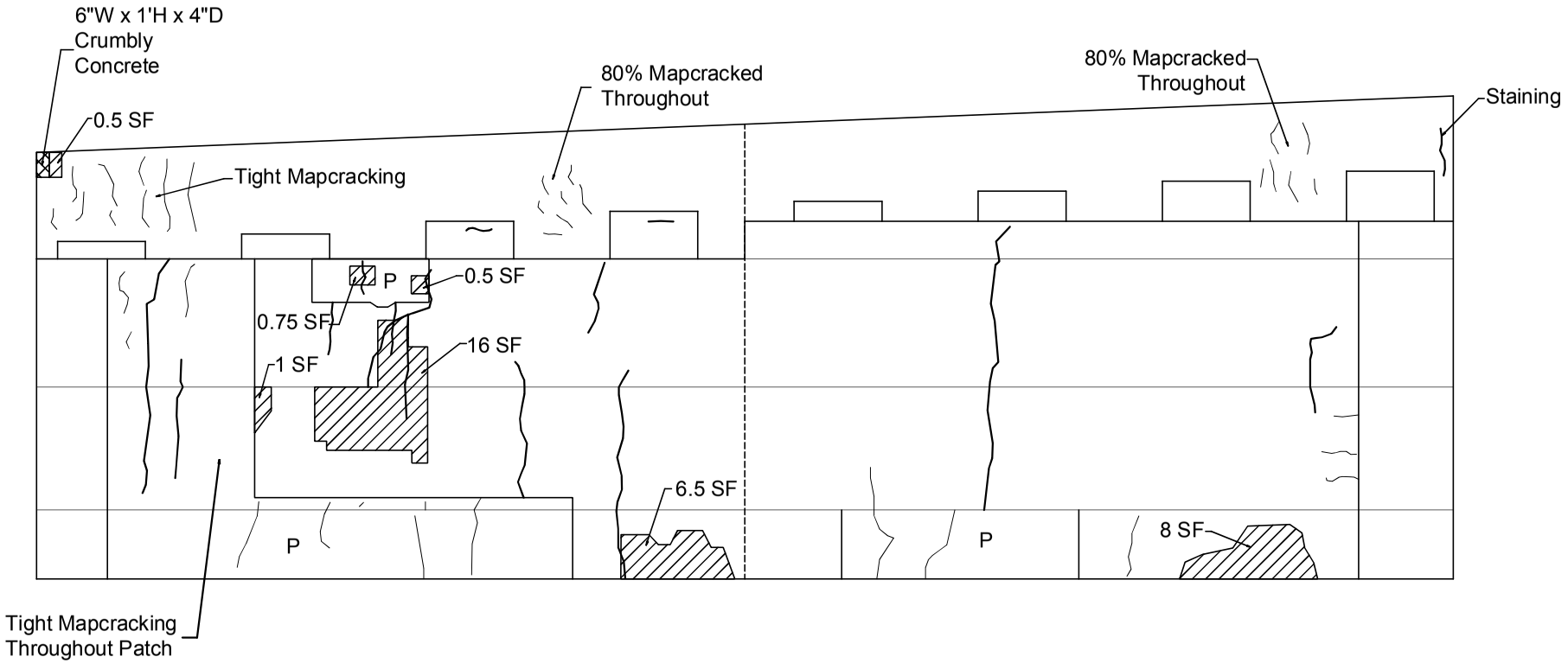

ELEVATION

LEGEND					
Hollow Concrete	P	Patch	Spall		
Crack		Hairline Crack			

BIN: 1031549
I-81/ East Colvin Street

END ABUTMENT DETERRIORATION SKETCH
RIGHT SIDE

NOT TO SCALE

DATE: 04/01/2014

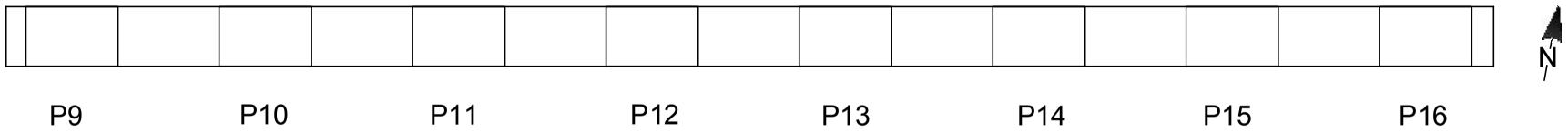

PLAN

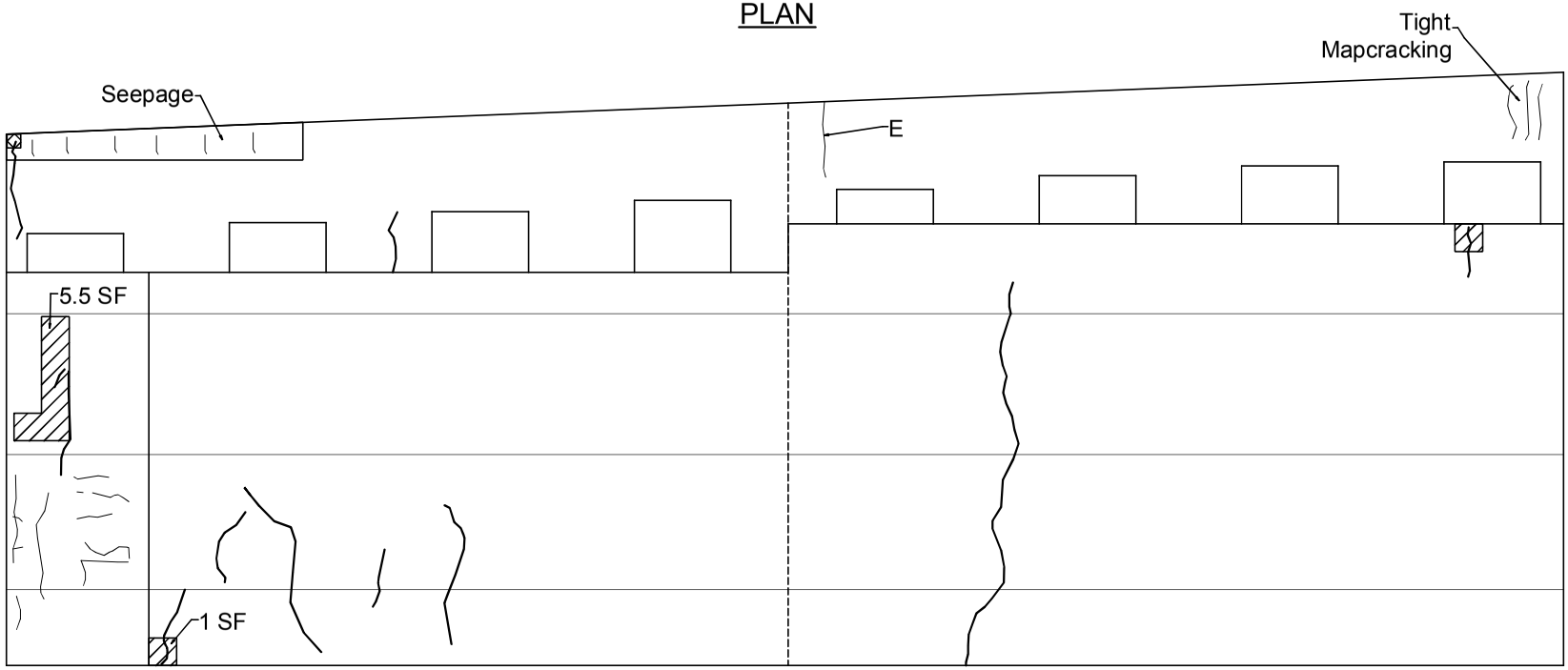

ELEVATION

LEGEND					
Hollow Concrete	P	Patch	Spall		
E	Efflorescence	Crack	Hairline Crack		

IN-DEPTH PHOTO DOCUMENTATION

BIN: 1031549
I81/ East Colvin Street

IN-DEPTH INSPECTION
PHOTO LOCATION SKETCH

DATE: 04/01/2014

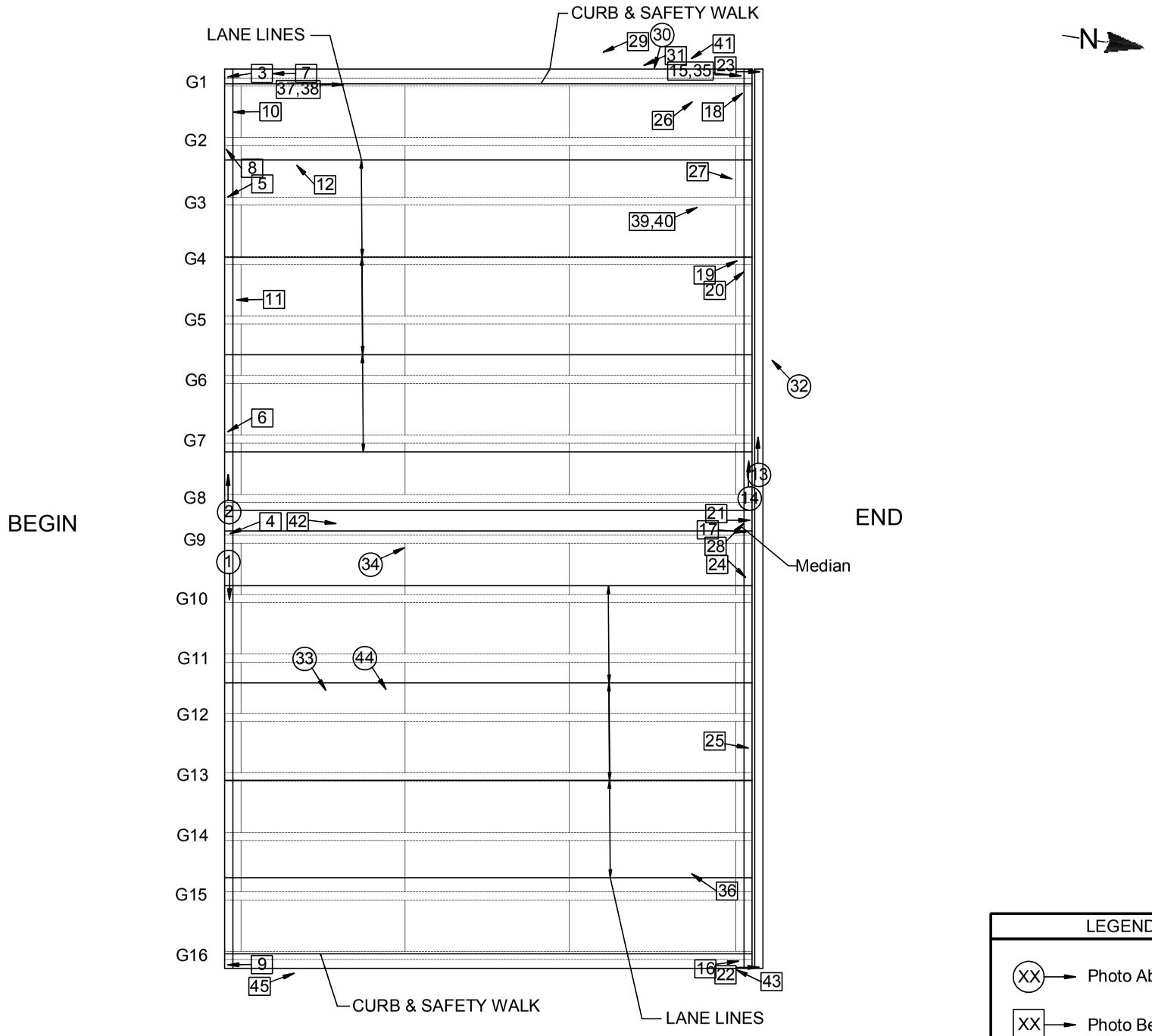

LEGEND

XX → Photo Above Deck

XX → Photo Below Deck



DESCRIPTION: NORTHBOUND BEGIN JOINT – LOOKING FROM LEFT TO RIGHT

PHOTO 1



DESCRIPTION: SOUTHBOUND BEGIN JOINT – LOOKING FROM RIGHT TO LEFT

PHOTO 2



DESCRIPTION: BEGIN ABUTMENT BEARING B1 – LEFT SIDE

PHOTO 3



DESCRIPTION: BEGIN ABUTMENT BEARING B9 – LEFT SIDE

PHOTO 4



DESCRIPTION: BEGIN ABUTMENT BEARING B3 – LEFT SIDE

PHOTO 5



DESCRIPTION: BEGIN ABUTMENT PEDESTAL P7 – LOOKING FROM LEFT TO RIGHT

PHOTO 6



DESCRIPTION: BEGIN ABUTMENT BACKWALL - LEFT FASCIA BAY

PHOTO 7



DESCRIPTION: BEGIN ABUTMENT BACKWALL BAY 2 – LOOKING FROM RIGHT TO LEFT

PHOTO 8



DESCRIPTION: BEGIN ABUTMENT BACKWALL RIGHT FASCIA BAY

PHOTO 9



DESCRIPTION: BEGIN ABUTMENT BACKWALL BAY 1

PHOTO 10



DESCRIPTION: BEGIN ABUTMENT BACKWALL BAY 4

PHOTO 11



DESCRIPTION: BEGIN ABUTMENT STEM LEFT SIDE – LOOKING FROM RIGHT TO LEFT

PHOTO 12



DESCRIPTION: SOUTHBOUND END JOINT – LOOKING FROM RIGHT TO LEFT

PHOTO 13



DESCRIPTION: SOUTHBOUND END JOINT – LOOKING FROM RIGHT TO LEFT

PHOTO 14



DESCRIPTION: END ABUTMENT BEARING B1 – LEFT SIDE

PHOTO 15



DESCRIPTION: END ABUTMENT BEARING B16 – RIGHT SIDE

PHOTO 16



DESCRIPTION: END ABUTMENT BEARING AT GIRDER G9 – LEFT SIDE

PHOTO 17



DESCRIPTION: END ABUTMENT PEDESTAL P1 RIGHT SIDE BACKWALL BAY 1 – LOOKING FROM RIGHT TO LEFT

PHOTO 18



DESCRIPTION: END ABUTMENT PEDESTAL P4 FRONT SIDE (PEDESTAL P3 SIMILAR)

PHOTO 19



DESCRIPTION: END ABUTMENT PEDESTAL P4 RIGHT SIDE (PEDESTAL P3 SIMILAR)

PHOTO 20



DESCRIPTION: END ABUTMENT BACKWALL BAY 8

PHOTO 21



DESCRIPTION: END ABUTMENT BACKWALL RIGHT FASCIA BAY

PHOTO 22



DESCRIPTION: END ABUTMENT BACKWALL LEFT FASCIA BAY

PHOTO 23



DESCRIPTION: END ABUTMENT BACKWALL BAY 9 – LOOKING FROM LEFT TO RIGHT

PHOTO 24



DESCRIPTION: END ABUTMENT BACKWALL BAY 12

PHOTO 25



DESCRIPTION: END ABUTMENT STEM LEFT SIDE

PHOTO 26



DESCRIPTION: END ABUTMENT STEM AT BAY 2 – LOOKING FROM LEFT TO RIGHT

PHOTO 27



DESCRIPTION: END ABUTMENT STEM AT MIDSPAN – LOOKING FROM RIGHT TO LEFT

PHOTO 28



DESCRIPTION: LEFT FASCIA AT END – LOOKING FROM END TO BEGIN

PHOTO 29



DESCRIPTION: LEFT PARAPET NEAR ¾ SPAN

PHOTO 30



DESCRIPTION: LEFT RAIL POST 2 AT END

PHOTO 31



DESCRIPTION: SOUTHBOUND LEFT PARAPET

PHOTO 32



DESCRIPTION: RIGHT PARAPET

PHOTO 33



DESCRIPTION: CENTER BARRIER RIGHT FACE – LOOKING FROM BEGIN TO END

PHOTO 34



DESCRIPTION: GIRDER G1 END LEFT

PHOTO 35



DESCRIPTION: FRAMING -- LOOKING FROM END TO BEGIN

PHOTO 36



DESCRIPTION: GIRDER G1 RIGHT NEAR BEGIN AT UTILITY SUPPORT ANGLE WELD – LOOKING FROM BEGIN TO END

PHOTO 37



DESCRIPTION: GIRDER G1 RIGHT NEAR BEGIN AT UTILITY SUPPORT ANGLE WELD – LOOKING FROM BEGIN TO END

PHOTO 38



DESCRIPTION: GIRDER G3 RIGHT NEAR END AT UTILITY SUPPORT ANGLE WELD – LOOKING FROM BEGIN TO END

PHOTO 39



DESCRIPTION: GIRDER G3 RIGHT NEAR END AT UTILITY SUPPORT ANGLE WELD – LOOKING FROM BEGIN TO END

PHOTO 40



DESCRIPTION: GIRDER G1 LEFT SIDE NEAR END – LOOKING FROM END TO BEGIN

PHOTO 41



DESCRIPTION: GIRDER G9 LEFT SIDE NEAR BEGIN – LOOKING FROM BEGIN TO END

PHOTO 42



DESCRIPTION: GIRDER G16 RIGHT SIDE NEAR END – LOOKING FROM END TO BEGIN

PHOTO 43



DESCRIPTION: NORTHBOUND LIGHT POST AT END RIGHT

PHOTO 44



DESCRIPTION: RIGHT PARAPET – LOOKING FROM BEGIN TO END

PHOTO 45

DESCRIPTION:

PHOTO

ASBESTOS SAMPLING SURVEY

Asbestos Sampling Survey

Location:
BIN 1-03154-9
Interstate Route 81 over Colvin Street

Prepared for:
New York State
Department of Transportation

PIN 3803.99.101

LaBella Project No. 97132

March, 1998

Table of Contents

Page

I. Project Summary 1

II. Site Description 1

III. Inspection Procedures 1

IV. Results 2

Certification 2

Figures and Table

I. Project Summary

In accordance with conditions of Term Agreement D010010, LaBella Associates, P.C. conducted an asbestos sampling survey of the Interstate Route 81 Bridge over Colvin Street. Based on laboratory analyses of bulk samples collected, the following materials were determined to contain asbestos:

BIN 1-03154-9 Interstate Route 81 over Colvin Street

Type of Material	Estimated Amount
Sheet Packing	23.4 Square Meters
Caulking Compound	1 Linear Meter

II. Site Description

The Site is located in Onondaga County, New York. For the purpose of this report, the Site consists of the Interstate Route 81 Bridge over Colvin Street (See attached FIGURE 1 - Site Location Map).

III. Inspection Procedures

The following procedures were used to obtain the data for this Report:

A. A review of record drawings supplied by Region 3 personnel and a visual inspection of the subject structure were conducted to identify potential visible/accessible sources of asbestos-containing materials. Observations and notes were made to provide a description of the structure, and an estimate of the approximate amount, length, or area of ACM present.

B. Physical or operational constraints which might affect the removal of the ACM were identified and reported.

C. Bulk samples of suspected ACM were collected during the site inspection of the subject structure. Samples were taken from each homogeneous area that may contain ACM.

D. Samples were submitted for analysis. Preliminary PLM analyses of NOB materials were performed by LaBella Laboratories, a NYSDOH approved laboratory, to determine the presence and percentage of asbestos in each sample. TEM analyses of NOB materials, if necessary, were performed by EMSL Analytical, Inc. or New York Testing Laboratories, Inc.

E. Lab results were used to determine the approximate location, type, and amount of the verified ACM.

F. A drawing of the structure at the Site was created, in order to show sample locations and the approximate locations and amounts of confirmed ACM observed in accessible locations.

Only accessible areas were inspected. Inaccessible areas, such as areas within the bridge or the approaches to the bridge were not included in this inspection. No investigation was conducted by LaBella Associates to determine the presence of underground utilities on or in the immediate vicinity of the Site. Actual sample locations are shown in the attached FIGURE 2. Results of bulk sample analyses are tabulated in the attached TABLE.

IV. Results

BIN 1-03154-9 Interstate Route 81 over Colvin Street

Sheet Packing

Asbestos-containing sheet packing is located between the tops of the abutments and the deck slabs at both ends of the bridge. Most of this material is presently covered by the bridge deck, although the edges of this sheet packing are exposed and visible at various locations.

It is estimated that the total amount of this asbestos-containing sheet packing material on the bridge is approximately 23.4 square meters. This estimate is based on field measurements taken at the time of the site visit.

The approximate locations of this asbestos-containing sheet packing are shown in FIGURE 2.

Caulking Compound

Small amounts of asbestos-containing caulking compound are located around a few of the guide rail base plates on both parapets on the bridge.

It is estimated that the total amount of this caulking compound is approximately 1 linear meter. This estimate is based on field observations made at the time of the site visit.

The approximate location of this material is shown in the attached FIGURE 2. Analytical results of bulk samples collected are summarized in the attached TABLE.

Certification

LaBella Associates, P.C. certifies the accuracy of this report, to the best of our knowledge, based on the information collected as described in the Inspection Procedures Section of this investigation.

Figures & Table

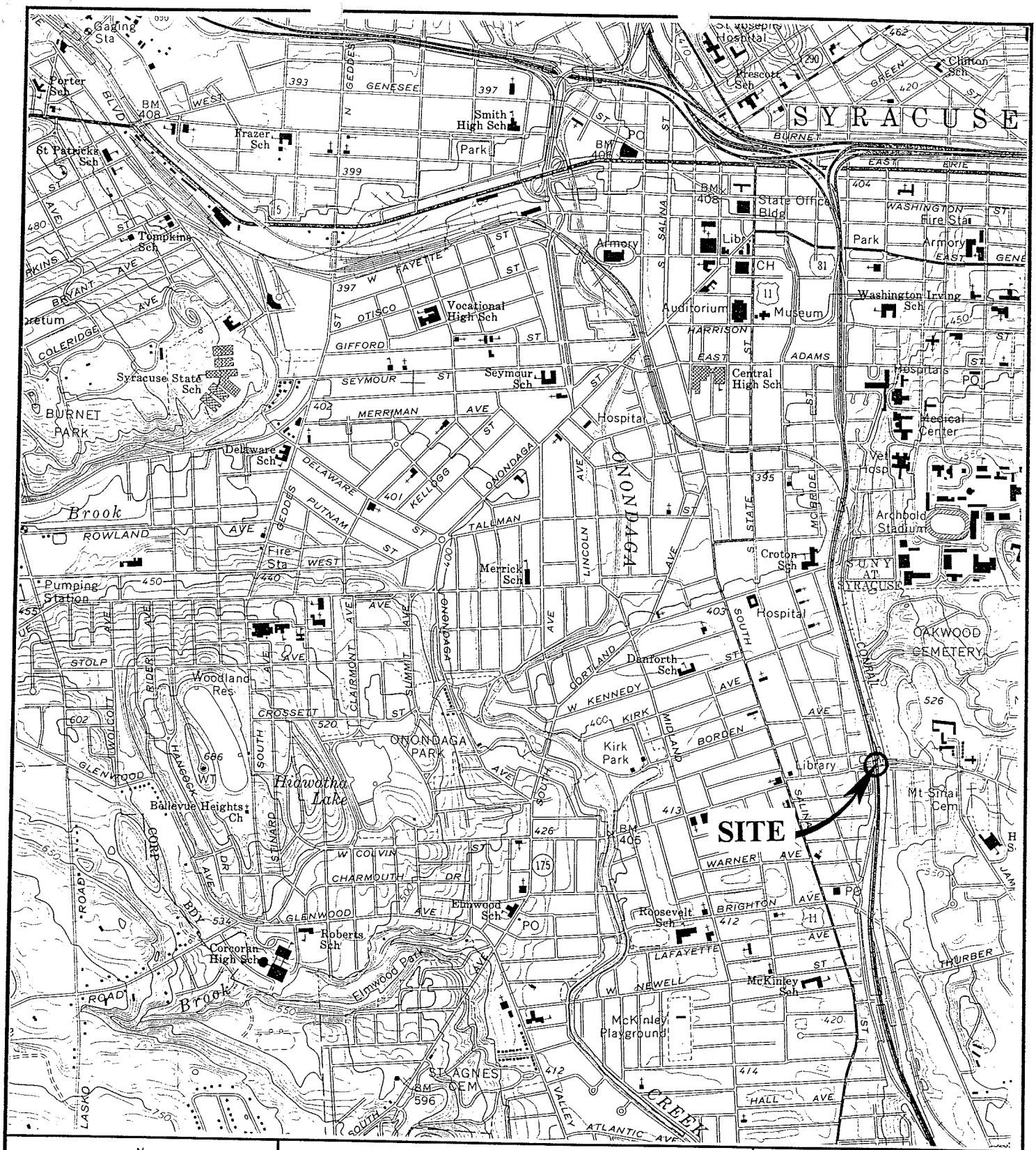

FIGURE 1
Site Location Map

I-81 OVER COLVIN STREET

BIN 1-03154-9

LABELLA

PROJECT NO. 97132

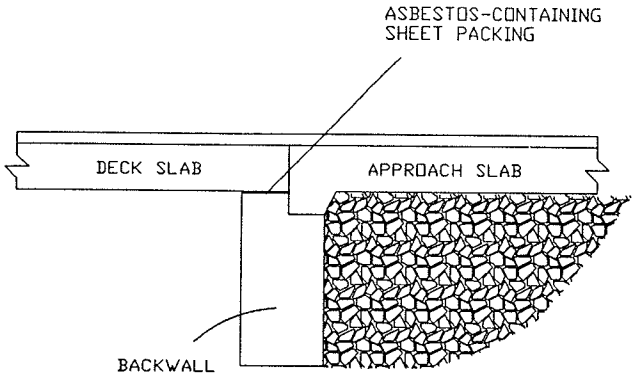

SECTION A-A

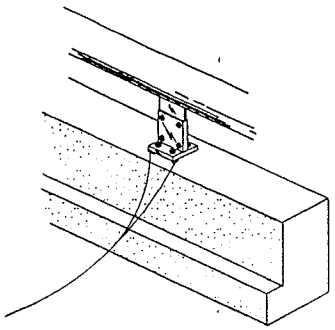

1 TYPICAL RAILING/ PARAPET DETAIL

SPOTTY APPLICATION OF ASBESTOS-CONTAINING CAULKING COMPOUND AROUND SOME GUIDE RAIL BASE PLATES

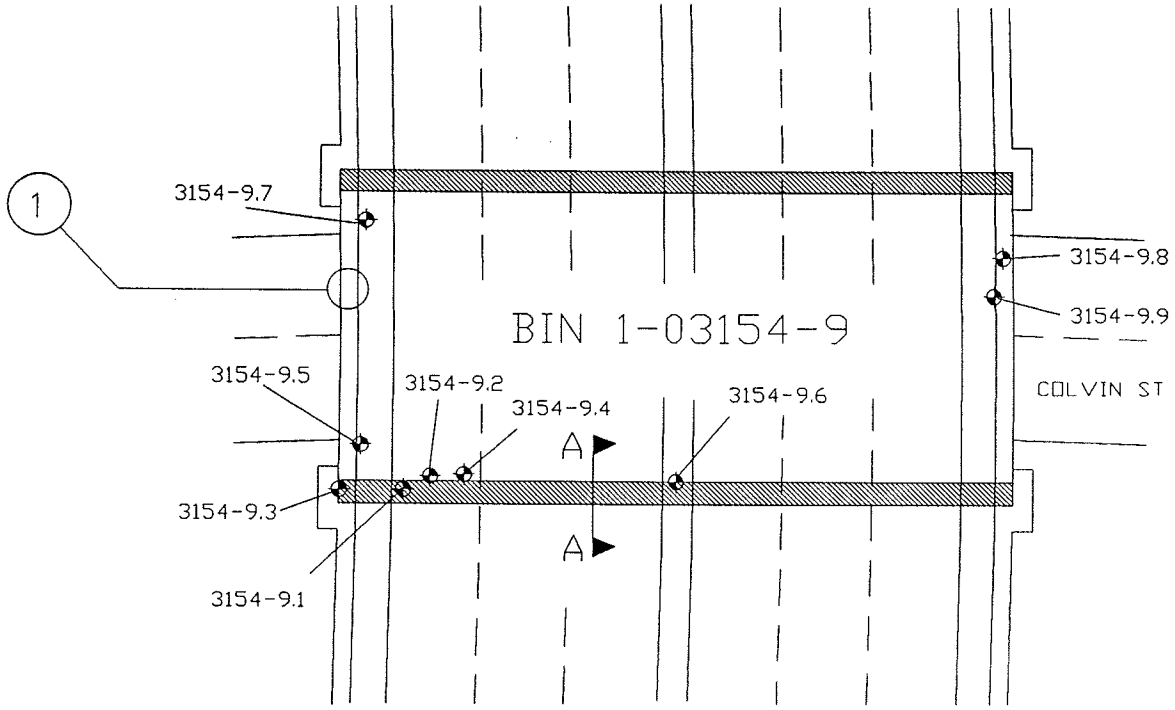

LEGEND

◆ 3154-9.1 SAMPLE LOCATION

▨ ASBESTOS-CONTAINING SHEET PACKING

NORTH

	PROJECT TITLE: ASBESTOS SAMPLING SURVEY 14 BRIDGES, VARIOUS COUNTIES, NEW YORK	PROJECT NO. 97132
		PIN 3803.99 101
	FIGURE TITLE: FIGURE 2 I-81 OVER COLVIN STREET BIN 1-03154-9 SAMPLE LOCATIONS AND CONFIRMED ACM	NOT TO SCALE
		DATE: MARCH, 1998

Bulk Sample Results Table

Asbestos Sampling Survey
BIN 1-03154-9
Interstate Route 81 over Colvin Street
Onondaga County, New York
LaBella Project # 97132
PIN 3803.99.101

Sample #	Sample Location	Type of Material	Results % Asbestos	Amount of Material	Specification Item No.
3154-9.1	**South End of Bridge Between Deck & Abutment**	**Sheet Packing**	**36 % Chrysotile**	**23.4 Square Meters**	**15202.0627M**
3154-9.2	South End of Bridge Beneath Bearing	Bearing Pad	None Detected	N/A	N/A
3154-9.3	South End of Bridge Between Deck & Wing Wall	Pre-Molded Bituminous Joint Filler	None Detected	N/A	N/A
3154-9.4	South End of Bridge On Pedestal	Masonry Coating	None Detected	N/A	N/A
3154-9.5	South End of Bridge on I-Beam	Green Paint	None Detected	N/A	N/A
3154-9.6	South End of Bridge in Expansion Joint in Abutment	Gray/Black Caulking Compound	None Detected	N/A	N/A
3154-9.7	North End of Bridge on I-Beam	Green Paint	None Detected	N/A	N/A
3154-9.8	**East Side of Bridge at Base of Guide Rail**	**White Caulking Compound**	**12% Chrysotile**	**1 Linear Meter**	**15202.0629M**
3154-9.9	East Side of Bridge in Expansion Joint in Parapet	Black Joint Sealer	None Detected	N/A	N/A

LATEST BIENNIAL INSPECTION REPORT

Inspection Date: 9/17/2013 RC: 33 BIN: 1031549

Bridge Ratings

Carried: 81I 81I33032028 Crossed: EAST COLVIN ST CheckValue: 1,812,921,855

Inspection Agency: 10 - NYSDOT Type of Inspection: 1 - BIENNIAL
GTMS: 302 -- Steel - Stringer/Multi-Beam or Girder
POSTINGS: See Gen Rec Page 1 for Postings at time of inspection.
Further Investigation Needed: No
State Highway Number: 64-7 Milepoint: 17.77 AADT/Yr: 46600 / 2002
Orientation: 1 - North Political Unit: 2055 - City of SYRACUSE Year Built: 1965
Total Spans: 1 Ramp Bridge Attached To Span: NA BIN: NA
General Recommendation: 5 Computed Condition Rating: 5.000

Abutment Ratings:	Beg Abut	End Abut
Joint with Deck	4	5
Bearings, Bolts, Pads	5	5
Seats and Pedestals	6	6
Backwall	5	6
Stem (Breastwall)	5	5
Erosion or Scour	6	6
Footings	9	9
Piles	8	8
Recommendation	5	6

Wingwall Ratings:	Beg Abut	End Abut
Walls	6	6
Footings	9	9
Erosion or Scour	6	6
Piles	8	8

Channel Ratings:	Channel
Stream Alignment	8
Erosion and Scour	8
Waterway Opening	8
Bank Protection	8

Approach Ratings:	Approaches
Drainage	5
Embankment	5
Settlement	6
Erosion	5
Pavement	5
Guide Railing	5

Number of Flags Issued:

RED: 0 Yellow: 0 Safety: 1

Vulnerability Reviews Recommended: 1=Yes, 2=No, 3=NA, X=NotActive

Hydraulic: 3	Overload: X	Steel: 2
Collision: 2	Concrete: X	Seismic: X

Inspector's Signature: CheckValue: 1,812,921,855 Date: 9/17/2013

Signed copy of this inspection report is available in the appropriate NYSDOT Regional Office

Dennis Conley,PE () (Inspector ID:3000063)

Reviewed By: Date: 10/16/2013

Signed copy of this inspection report is available in the appropriate NYSDOT Regional Office

James R. Manning,PE () (QC ID:3000023)

Inspection Date: 9/17/2013 RC: 33 BIN: 1031549

Span Ratings

Carried: 81I 81I33032028 Crossed: EAST COLVIN ST CheckValue: 1,812,921,855

Deck Element Ratings:	001
Wearing Surface	4
Curbs	5
Sidewalks, Fascias	5
Railings, Parapets	5
Scuppers	8
Gratings	8
Median	4
Mono Deck Surface	5

Superstructure Ratings:	001
Structural Deck	4
Primary Members	5
Secondary Members	6
Paint	5
Joints	8
Recommendation	5

Pier Ratings:	001
Bearings, Bolts, Pads	8
Pedestals	8
Top of Cap or Beam	8
Stem Solid Pier	8
Cap Beam	8
Pier Columns	8
Footings	8
Erosion or Scour	8
Piles	8
Recommendation	8

Utility Ratings:	001
Lighting	4
Sign Structure	8
Utilities and Support	8

Field Notes:

Field Date	Arrival	Departure	Temp (C)	Temp (F)	Weather Conditions
9/16/2013	12:00:00 PM	2:00:00 PM		68	light rain
9/17/2013	3:00:00 PM	5:00:00 PM		72	sunny

Inspection Date: 9/17/2013 RC: 33 BIN: 1031549

Inspection Notes

Carried: 81I 81I33032028 Crossed: EAST COLVIN ST CheckValue: 1,812,921,855

Note ID: 311310315490007

General Note for Bridge
Referenced Photos:
2013 - 100% hands-on inspection performed 09/16/2013 as required.

Note ID: 311310315490000

Beg Abut -- Abutment: Joint with Deck -- Rated 4, Was 4
Referenced Photos: "1"
2013 - Joint material is missing at two locations near header repair. The header repair has begun to spall.

Note ID: 311310315490001

Approaches: Settlement -- Rated 6, Was 4
Referenced Photos: "2"
2013 - Contract work has repaired component.

Note ID: 311310315490002

Approaches: Pavement -- Rated 5, Was 3
Referenced Photos: "1", "2"
2013 - Contract work improved AC pavement. PC approach slab has various longitudinal cracks.

Note ID: 311310315490003

Span 001 -- Deck Elements: Wearing Surface -- Rated 4, Was 4
Referenced Photos: "3"
2013 - There is no significant change since last inspection. There are uniform longitudinal and transverse cracks throughout.

Note ID: 311310315490005

Span 001 -- Deck Elements: Median -- Rated 4, Was 4
Referenced Photos: "4"
2013 - There is no significant change since last inspection. The median area is leaking and wet underneath, with pieces of bituminous filler material hanging down over the respective sidewalks. The concrete median barrier is spider cracked throughout it's length.

Note ID: 311310315490004

Span 001 -- Superstructure: Structural Deck -- Rated 4, Was 4
Referenced Photos: "5", "6"
2013 - There is no significant change since last inspection. There are several bays with effflo, spalls with delamination and exposed rebar. see deck sketch.

Inspection Date: 9/17/2013 RC: 33 BIN: 1031549

Inspection Notes

Carried: 81I 81I33032028 Crossed: EAST COLVIN ST CheckValue: 1,812,921,855

Note ID: 311310315490006

Span 001 -- Utilities: Lighting -- Rated 4, Was 4
Referenced Photos: "7", "8"
2013 - Broken weld on utility support at end right. Also the light conduit on top right of bridge has been repaired.

Inspection Date: 9/17/2013 RC: 33 BIN: 1031549

Inspection Photos in Photo Number Order

Carried: 81I 81I33032028 Crossed: EAST COLVIN ST CheckValue: 1,812,921,855

Begin Joint and Pavement, looking from right to left



Photo Number: 1 Photo Filename: 13BeginJointPav.jpg

End Pavement and Settlement, looking from right to left



Photo Number: 2 Photo Filename: 13EndPavSet.jpg

Inspection Date: 9/17/2013 RC: 33 BIN: 1031549

Inspection Photos in Photo Number Order

Carried: 81I 81I33032028 Crossed: EAST COLVIN ST CheckValue: 1,812,921,855

Begin Right Wearing Surface, looking from right to left	 Photo Number: 3 Photo Filename: 13WS.jpg
Underside of Median, looking from begin to end	 Photo Number: 4 Photo Filename: 13MedianUnder.jpg

Inspection Date: 9/17/2013 RC: 33 BIN: 1031549

Inspection Photos in Photo Number Order

Carried: 81I 81I33032028 Crossed: EAST COLVIN ST CheckValue: 1,812,921,855

Begin Bay 3 Deck, looking from begin to end



Photo Number: 5 Photo Filename: 13Deck Bay3.jpg

Bay 4 Delam, looking from begin to end



Photo Number: 6 Photo Filename: 13DeckBay4Delam.j

Inspection Date: 9/17/2013 RC: 33 BIN: 1031549

Inspection Photos in Photo Number Order

Carried: 81I 81I33032028 Crossed: EAST COLVIN ST CheckValue: 1,812,921,855

Broken weld on utility support, looking from begin to end



Photo Number: 7 Photo Filename: 13UtilSupporBrok.jp

Light on Right side, Fixed, looking from begin to end

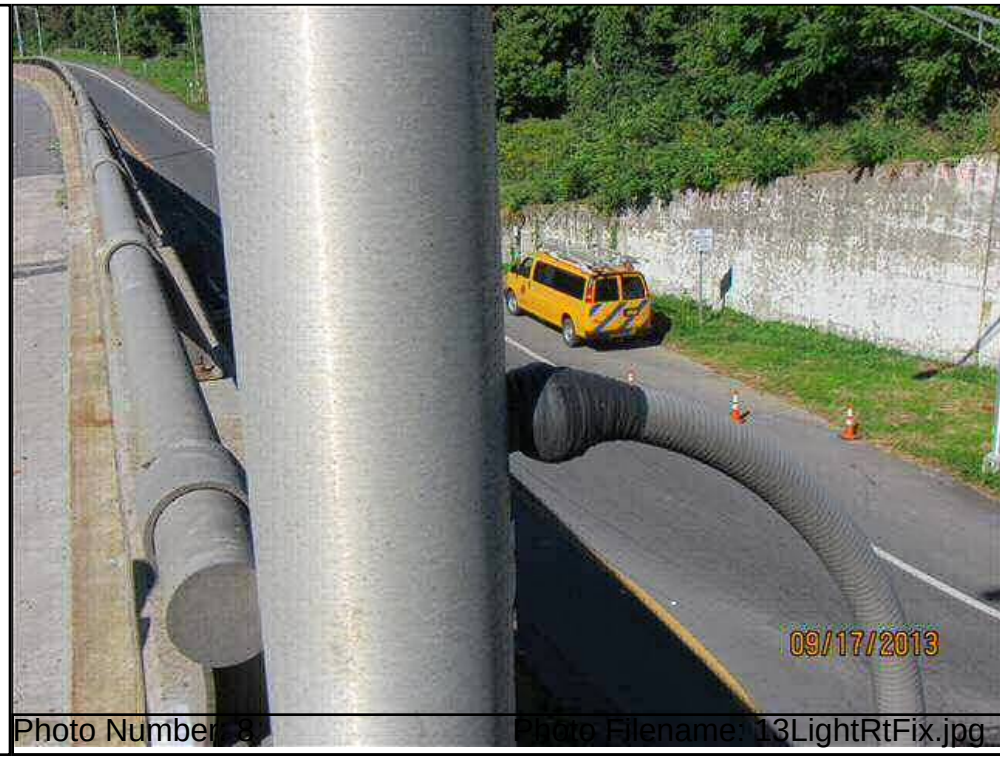

Photo Number: 8 Photo Filename: 13LightRtFix.jpg

Inspection Date: 9/17/2013 RC: 33 BIN: 1031549

Inspection Sketches in Sketch SysID Order

Carried: 81I 81I33032028 Crossed: EAST COLVIN ST CheckValue: 1,812,921,855

Sketch ID: 311310315490000 Sketch Filename: LdRatNCL.13

General Sketch for Bridge
Referenced Photos:

Load rating

Region 3 LoadRatingFieldCheckForm

NYSDOT BRIDGE INSPECTION REPORT			
SHEET	1	OF	1

LOAD RATING FIELD CHECK FORM

BIN:	1031549	Insp. Date:	09/17/2013

Dead Load - Note Changes since Last load Rating or state "NONE":

NONE

Section Loss -Note Changes since Last load Rating or state "NONE":

NONE

Additional Notes:

NONE

Attachments:

Team Leader: Dennis Conley

Inspection Date: 9/17/2013 RC: 33 BIN: 1031549

Inspection Sketches in Sketch SysID Order

Carried: 81I 81I33032028 Crossed: EAST COLVIN ST CheckValue: 1,812,921,855

Sketch ID: 311310315490001 Sketch Filename: DeckSketch.tif

Span 001 -- Superstructure: Structural Deck -- Rated 4, Was 4
Referenced Photos: "5", "6"

Deck Sketch

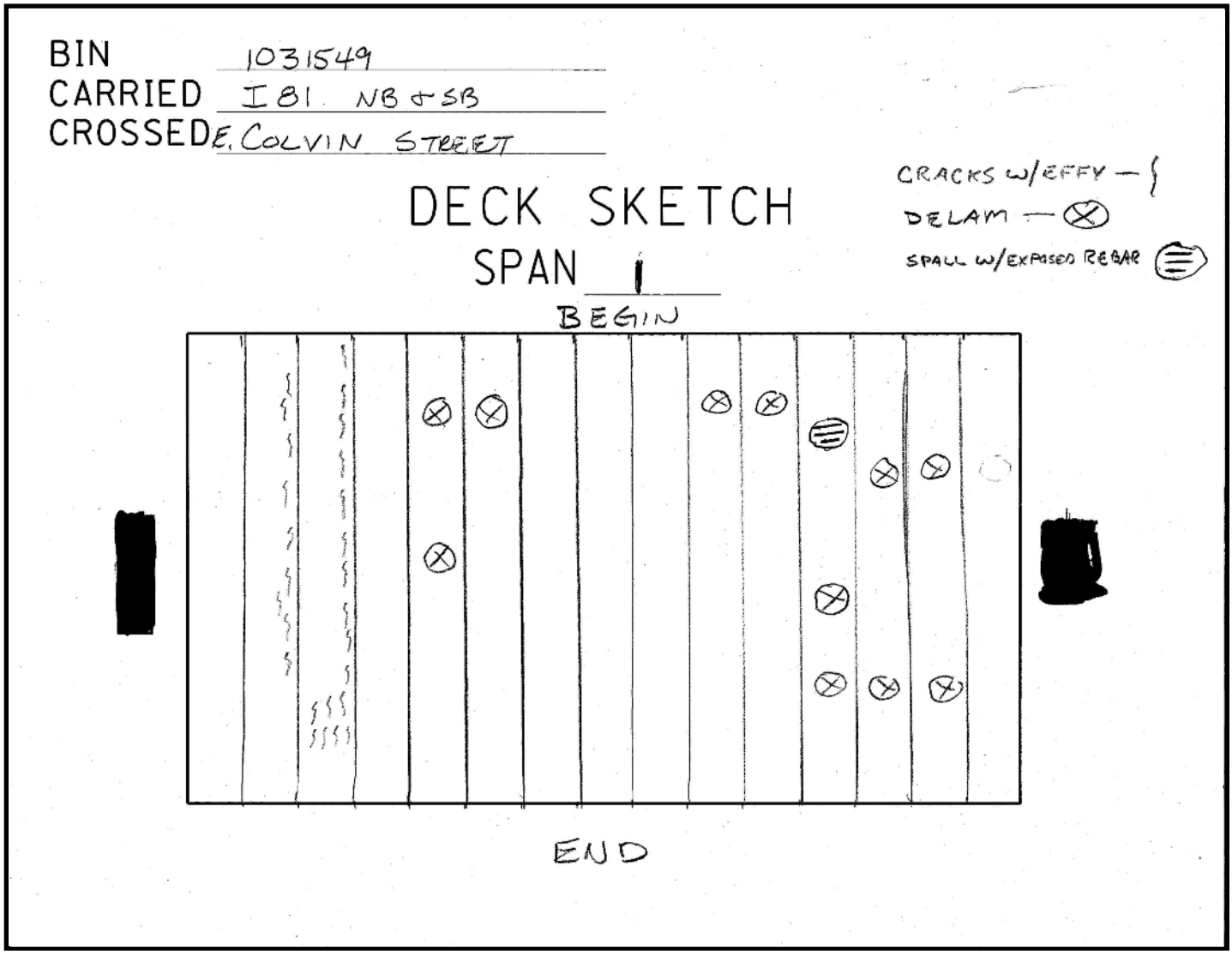

Inspection Date: 9/17/2013 RC: 33 BIN: 1031549

Gen. Rec., Postings, Federal Ratings, etc.

Carried: 81I 81I33032028 Crossed: EAST COLVIN ST CheckValue: 1,812,921,855

Overall Condition:

GENERAL RECOMMENDATION: 5

Computed Condition Rating: 5.000

Problems Requiring Action:

NO Further Investigation Needed

SAFETY Flag(s) Issued

POSTINGS:

Inspector Confirmed existing Posting data as correct.
Posted Vertical Clearance ON the bridge is: No Posting
Posted Vertical Clearance UNDER the bridge is: No Posting
No Load Restriction is posted on this bridge

Overloads Observed:

NO Overload Vehicles were observed on this bridge

FEDERAL RATINGS:

NBI Deck Condition: 5
NBI Superstruct Condition: 7
NBI Substruct Condition: 7
NBI Channel Condition: N
NBI Culvert Condition: N

Diving Inspection Needs:

Diving Inspection Required? No Date of Last Diving Inspection: No Date

Inventory Problems:

Inventory Problems Exist? No

Miscellaneous:

Time Required to Inspect Bridge: 4 Hours

Lane Closure Needs: By Contract for 2 Hours

No Railroad Flagging Required

No Pedestrian Fence

No Snow Fence

The BIN Plate is in OK condition

Inspection Date: 9/17/2013 RC: 33 BIN: 1031549

Gen. Rec., Postings, Federal Ratings, etc.

Carried: 81I 81I33032028 Crossed: EAST COLVIN ST CheckValue: 1,812,921,855

Special Emphasis Inspection Required:

Non-Redundant/Fracture Critical Members - No
Pin and Hangers - No
Fatigue-Prone Welds - Yes
Non-Categorized Fatigue-Prone Details - No
Other (Specified in Text) - Yes

Special Emphasis Details:

Cover plate welds, all girders except #9

Utility support welds, welds at utility junction box @ begin left

General Notes To the Next Inspector:

Improvements Observed:

Inspection Date: 9/17/2013 RC: 33 BIN: 1031549

Review Progress and Personnel Present at Inspection

Carried: 81I 81I33032028 Crossed: EAST COLVIN ST CheckValue: 1,812,921,855

Inspection Submission Status:

Submitted to QC Engineer on: 9/18/2013
QC Submission Number: 153313

QC Review Completed: 10/16/2013
QC Engineer: James R. Manning

Submitted to Liaison Engineer on: 10/24/2013
Liaison Submission Number: 53345

Liaison Review Completed: 11/22/2013
Liaison Engineer: TODD M. HERMANN

Submitted for BIIS Processing on: 11/22/2013
BIIS Submission Number: .kp1

Current Status: Keypunched, Sent to BIIS
Check Value: 1,812,921,855

Personnel Present During Inspection:

Dennis Conley - Team Leader
Steve Grabosky - Assistant Team Leader
B. Buckland - WZTC
A. Norland - WZTC
D. Ruducy - WZTC

Discovery Date: 9/18/2013 RC: 33 BIN: 1031549

Safety Flag 31130050

Carried: 81I 81I33032028 Crossed: EAST COLVIN ST

Prompt Interim Action Recommended: No

Inspector: Conley, Dennis
Flag Number: 31130050
Date Discovered: 9/18/2013
Supersedes Flag Number: _____

Bridge Description:
BIN: 1031549 Carried: 81I 81I33032028 Crossed: EAST COLVIN ST

Region: 3 - Syracuse County: 3 - Onondaga
Political Unit: 2055 - City of SYRACUSE
Residency Code: - N/A
Primary Owner: 10 - State Department of Transportation
Secondary Owner: 99 - One Agency - Listed in first subfield
Primary Maintenance: 10 - State - Highway Maintenance
Secondary Maintenance: 99 - One Agency - Listed in first subfield
Year Built: 1965 Not Posted For Load

Number of Spans by Type:

Num	Type	Description
001	109	Steel - Rolled Beam, Multi-Girder

Bridge is wholly or partially owned or maintained by NYSDOT.

Description of Flagged Condition:
Orientation: North.
Component: TP350[27] Structural Deck.
Span# 2
Rated: 4

2013 - There are several bays over live traffic on Colvin St with hollow concrete that is starting to delaminate. See Deck Sketch.

1 Photos/Sketches Attached

Verbal Notifications: (For RED Flags and Safety Flags with PIA only)

To: _____ of Regional Office on _____ at _____

Signature: (a signed copy of this report will be placed in the BIN folder)
Flagged Bridge Report Completed By: Conley, Dennis on 9/18/2013
Flagged Bridge Report Signed By: _____ on _____
Conley, Dennis

(This PDF Report Created: 12/3/2013 6:52:53 PM)

Discovery Date: 9/18/2013 **RC: 33 BIN: 1031549**

Safety Flag 31130050 Attachment

Carried: 81I 81I33032028 Crossed: EAST COLVIN ST

DeckSketch.tif - Attached to Safety Flag 31130050

Deck Sketch

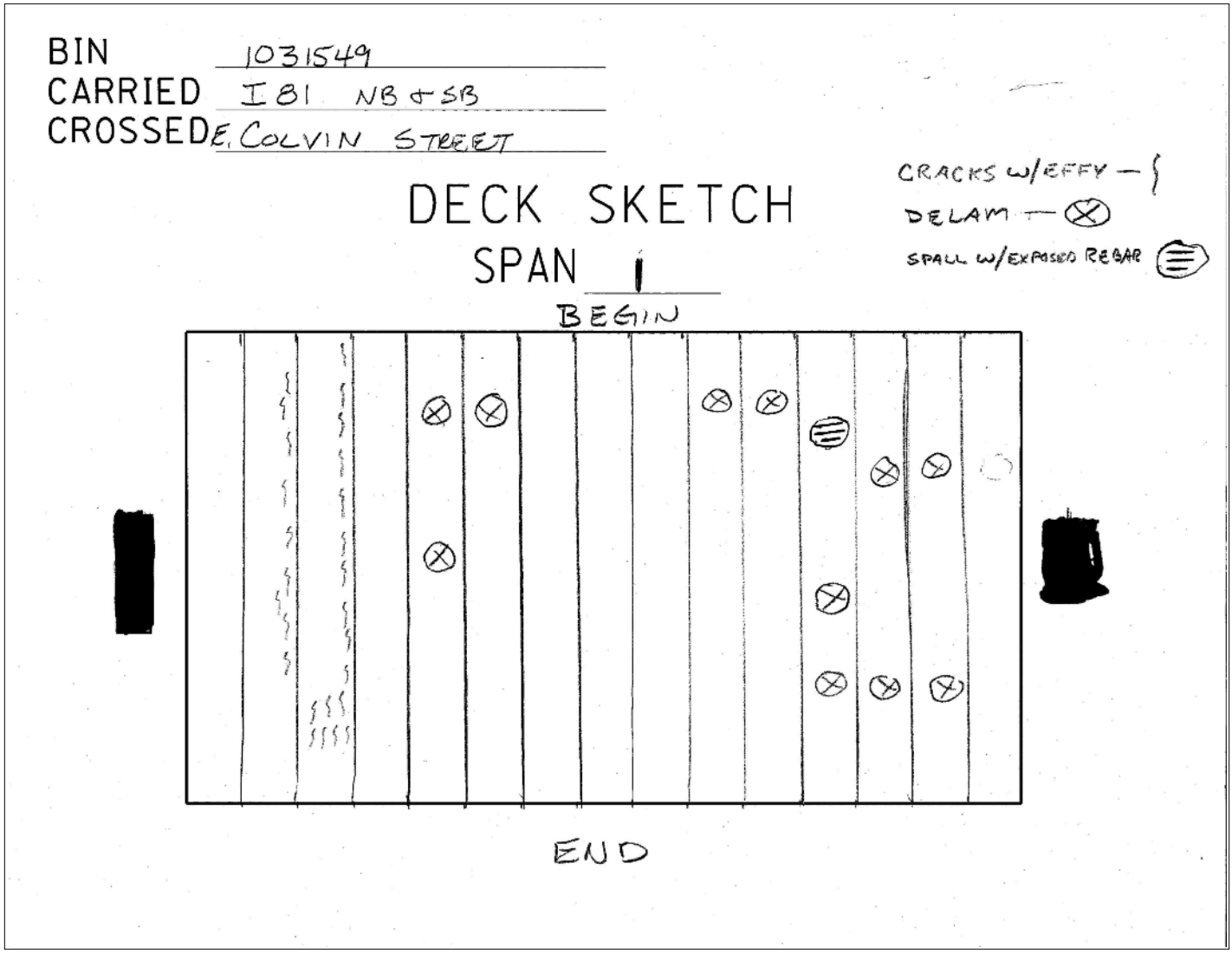

Inspection Date: 9/17/2013 RC: 33 BIN: 1031549

Inspection Access Requirements

Carried: 81I 81I33032028 Crossed: EAST COLVIN ST CheckValue: 1,812,921,855

Equipment Required for Inspection

No Access Requirement Changes Noted During This Inspection.
This Listing is from the Inventory Database.

ACCESS CATEGORIES FOR ENTIRE BRIDGE
Required: Walking, Small Lift, Lane Closure, Shadow Vehicle

ACCESS CATEGORIES FOR SPAN 1
Required: Walking, Small Lift, Lane Closure, Shadow Vehicle

Inspection Date: 9/17/2013 RC: 33 BIN: 1031549

Culvert Measurements

Carried: 81I 81I33032028 Crossed: EAST COLVIN ST CheckValue: 1,812,921,855

Culvert Measurements

NO CULVERT DATA FOR BIN 1031549

Standard Photos **RC: 33 BIN: 1031549**

Carried: 81I 81I33032028 Crossed: EAST COLVIN ST

Feature Crossed Left .11.JPG



Standard Photos **RC: 33 BIN: 1031549**

Carried: 81I 81I33032028 Crossed: EAST COLVIN ST

Feature Crossed Right.11.JPG



Standard Photos **RC: 33 BIN: 1031549**

Carried: 81I 81I33032028 Crossed: EAST COLVIN ST

1031549_LOCATION_MAP.JPG

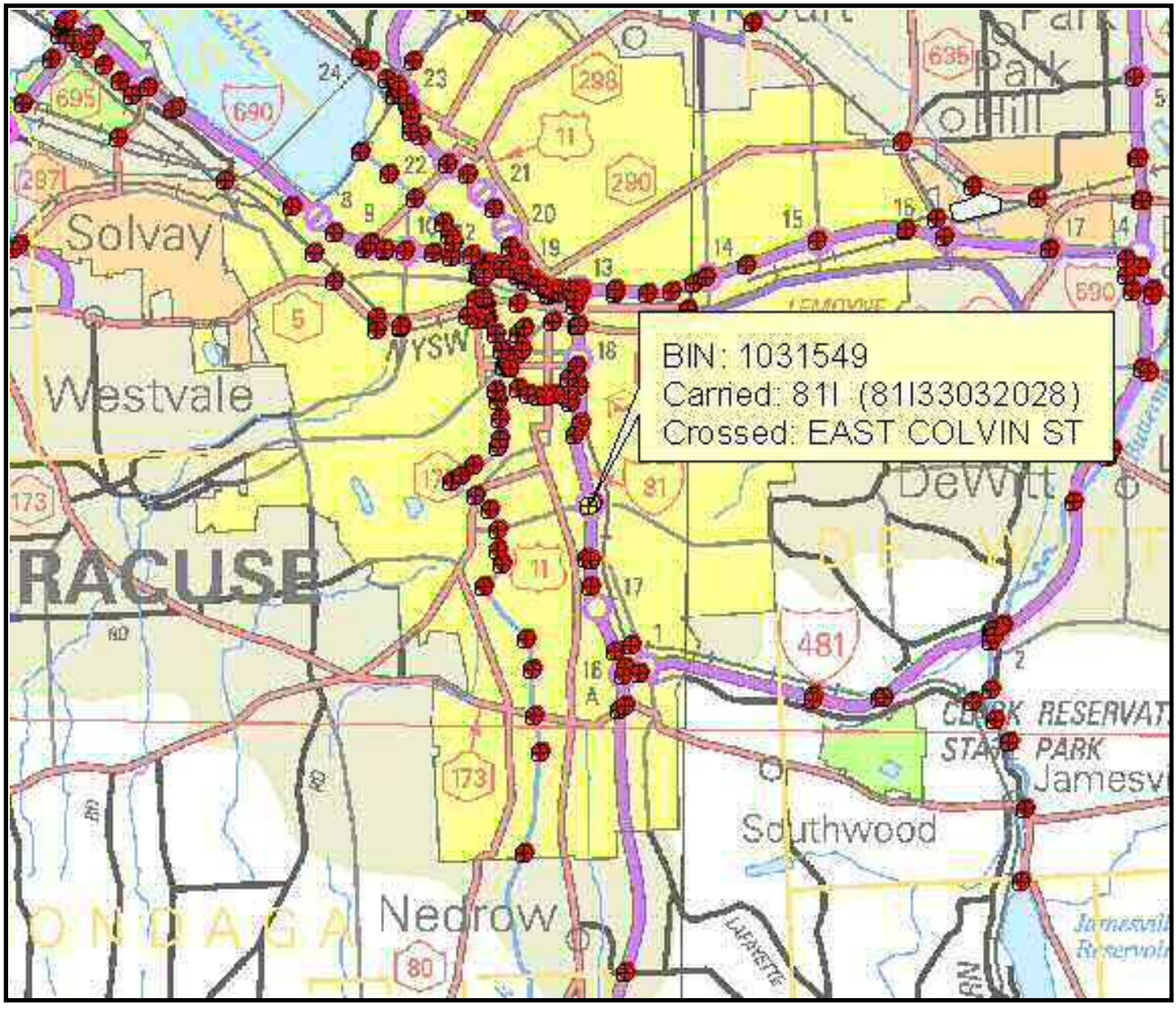

Standard Photos **RC: 33 BIN: 1031549**

Carried: 81I 81I33032028 Crossed: EAST COLVIN ST

1031549_QUAD_MAP.JPG

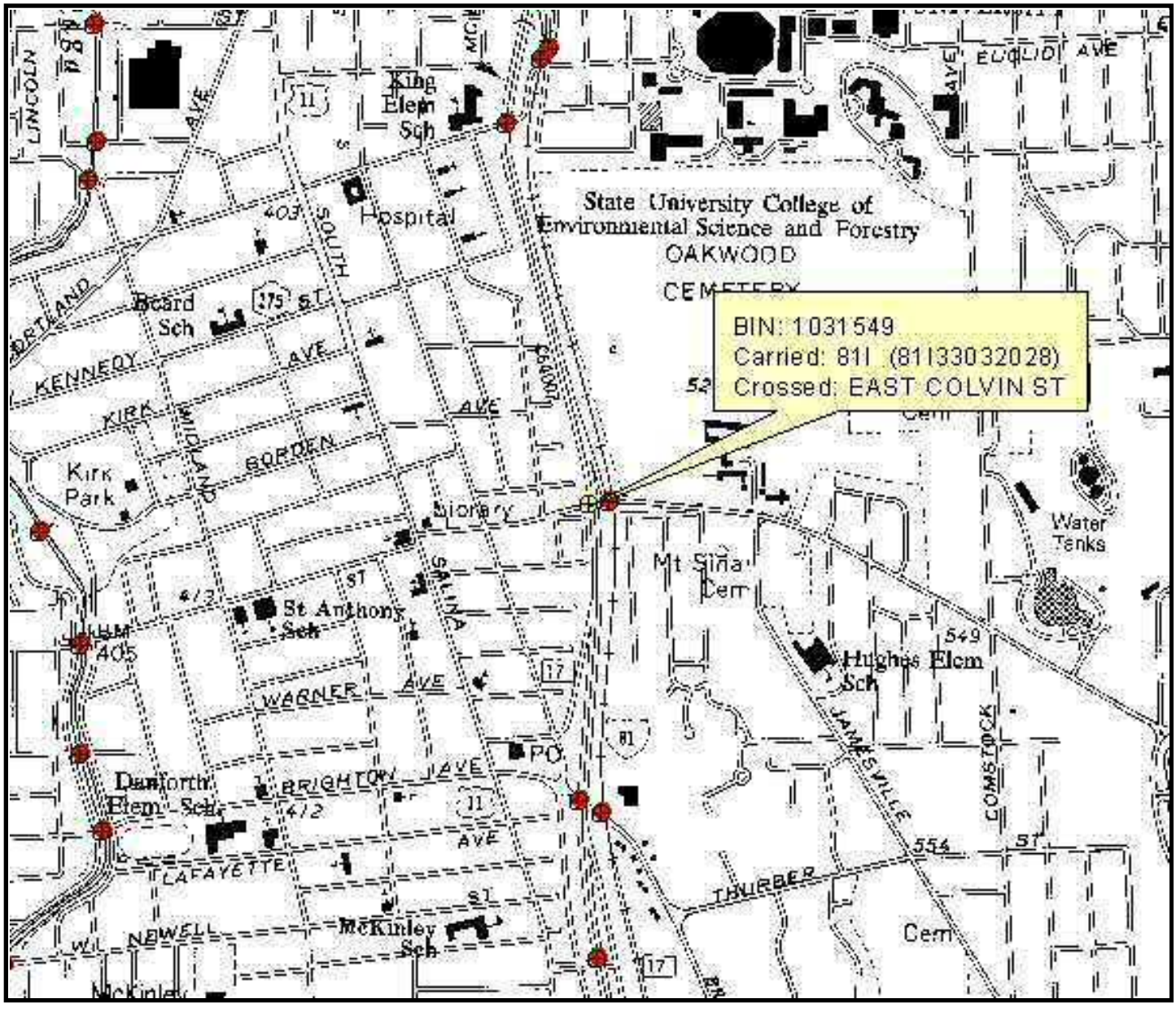

Standard Photos **RC: 33 BIN: 1031549**

Carried: 81I 81I33032028 Crossed: EAST COLVIN ST

Abutment Begin.11.JPG



Standard Photos **RC: 33 BIN: 1031549**

Carried: 81I 81I33032028 Crossed: EAST COLVIN ST

Abutment End.11.JPG

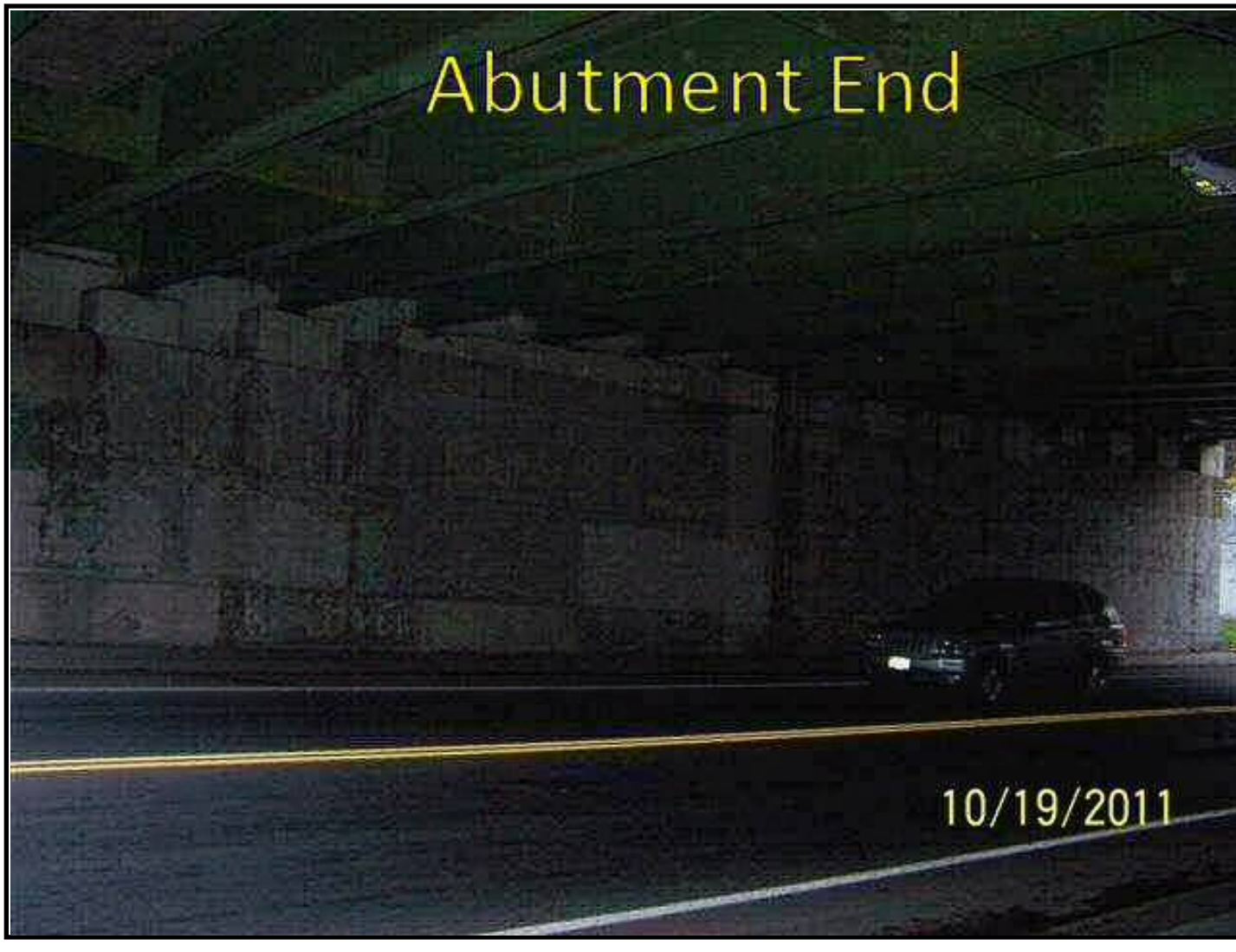

Standard Photos **RC: 33 BIN: 1031549**

Carried: 81I 81I33032028 Crossed: EAST COLVIN ST

Approach Begin NB.11.JPG



Standard Photos **RC: 33 BIN: 1031549**

Carried: 81I 81I33032028 Crossed: EAST COLVIN ST

Approach Begin SB.11.JPG



Standard Photos **RC: 33 BIN: 1031549**

Carried: 81I 81I33032028 Crossed: EAST COLVIN ST

Approach End NB.11.JPG



Standard Photos **RC: 33 BIN: 1031549**

Carried: 81I 81I33032028 Crossed: EAST COLVIN ST

Approach End SB.11.JPG



Standard Photos **RC: 33 BIN: 1031549**

Carried: 81I 81I33032028 Crossed: EAST COLVIN ST

Elevation Left.11.JPG



Standard Photos **RC: 33 BIN: 1031549**

Carried: 81I 81I33032028 Crossed: EAST COLVIN ST

Framing View.11.JPG



LEVEL 1 LOAD RATING SUMMARY SHEET

Region/County Region 3/Onondaga BIN 1031549
Feature(s) Carried and Crossed I-81 Southbound and Northbound/E. Colvin Street
Date of field inspection upon which Level 1 rating is based 4/01/2014

OVERALL BRIDGE RATINGS (BASED ON LOWEST RATED ELEMENTS):

Total number of rating units 1

	H inventory	H operating	HS inventory	HS operating
Rating	H 41.80 (tons)	H 69.81 (tons)	HS 52.59 (tons)	HS 87.82 (tons)
Lowest rated element	Northbound Girder G1 (S4 plan)	Northbound Girder G1 (S4 plan)	Northbound Girder G1 (S4 plan)	Northbound Girder G1 (S4 plan)

Analysis method LFR Comments

Individual Rating Unit Level 1 values:

Rating unit span(s) 1

Main member ratings

	H inventory	H operating	HS inventory	HS operating
Rating	H (tons)	H (tons)	HS (tons)	HS (tons)
Lowest rated element				

Analysis method Comments

Floorbeam ratings

	H inventory	H operating	HS inventory	HS operating
Rating	H (tons)	H (tons)	HS (tons)	HS (tons)
Lowest rated element				

Analysis method Comments

Stringer ratings

	H inventory	H operating	HS inventory	HS operating
Rating	H 41.80 (tons)	H 69.81 (tons)	HS 52.59 (tons)	HS 87.82 (tons)
Lowest rated element	Northbound Girder G1 (S4 plan)	Northbound Girder G1 (S4 plan)	Northbound Girder G1 (S4 plan)	Northbound Girder G1 (S4 plan)

Analysis method LFR Comments

Certified by Date

Quality Control Engineer Signature Date
Agency or Company represented by certifier

Note:
-If connection ratings govern, record them under stringer ratings for stringer – floorbeam connection, floorbeam ratings for floorbeam-main member connections, etc.
-When Level 1 results indicated the need for load posting or other corrective action, the NYSDOT Regional Structures Engineer shall be notified immediately.
-Load ratings should be filed in the regional office within 60 days of completion of calculations.
-Bridges shall be flagged based on Level I results in accordance with the current NYSDOT flagging procedure.
-Bridge load posting, closure, etc. determinations shall be made as results are being produced.

PARSONS

100 Broadway
New York, NY 10005
Phone: 212-266-8300
Fax: 212-571-6825
www.parsons.com

TECHNICAL MEMORANDUM

FROM: Kian Siang Chau, P.E
NYSPE 082744

DATE: APRIL 25, 2014

RE: SEISMIC SCREENING SUMMARY
NEW YORK STATE DEPARTMENT OF TRANSPORTATION
D031085; PIN 3501.60; I-81

BIN: 1031549 (I-81 / E Colvin St)

This memorandum summarizes the seismic screening conducted for BIN 1031549 as part of the Interstate 81 Project in Syracuse, NY. The purpose of the screening is to determine if seismic retrofits are warranted at the superstructure to substructure connection, and if further seismic evaluation of the structure is required. This memorandum will give the screening results, retrofits required and recommendations for further seismic evaluation of the structure.

SCREENING PROCEDURE

The seismic screening was performed in accordance with the FHWA Seismic Retrofitting Manual for Highway Structures: Part 1 - Bridges, January 2006. As per the referenced manual, seismic screenings were performed for both lower level and upper level earthquake ground motion. The lower level earthquake ground motion has a reasonable likelihood of occurrence within the life of the bridge (50% probability of exceedance within a 75 year bridge life). The upper level earthquake ground motion has a finite likelihood of occurrence within the life of the bridge (7% probability of exceedance within a 75 year bridge life).

Values for the spectral acceleration for the Syracuse area used in the screening are as follows:

- Lower Level Earthquake Ground Motion for a Short Period (0.2 seconds): $S_S = 0.0251$
- Lower Level Earthquake Ground Motion for a Long Period (1.0 seconds): $S_1 = 0.0076$
- Upper Level Earthquake Ground Motion for a Short Period (0.2 seconds): $S_S = 0.139$
- Upper Level Earthquake Ground Motion for a Long Period (1.0 seconds): $S_1 = 0.047$

These values are considered constant and are the same for all seismic screenings of bridges in the Syracuse area.

The Site Class is based on the soil conditions at the bridge location. It was determined that this parameter has little effect on the results of the seismic screening because the spectral acceleration values for the Syracuse area are small. Based on this, a site class of D was used for all seismic screenings of bridges in the Syracuse area.

Bridge parameters used in the seismic screening were retrieved from the record drawings and WinBolts data.

The seismic screening takes into account the anticipated service life, importance, and the seismic exposure of the bridge to determine a seismic retrofit category (SRC). The SRC is then used to determine seismic evaluation methods and retrofit measures. There are four SRCs, A through D. Seismic retrofit category A is the lowest category; bridges in this category do not require retrofits or further seismic evaluation. Seismic retrofit category D is the highest category; bridges in this category requiring the most rigorous seismic evaluations and retrofits.

SCREENING RESULTS

The SRC for the bridge is "**C**" for lower level earthquake ground motion and "**B**" for upper level earthquake ground motion.

RETROFITS REQUIRED

No seismic retrofits are required for the bridge superstructure to substructure connection.

RECOMMENDATIONS FOR FURTHER SEISMIC EVALUATION

No further seismic evaluation is required for lower level earthquake ground motion. For the upper level earthquake ground motion, it is recommended that the capacities of the bearings are checked as per Section 5.2 of the referenced manual.

Retrofit cost estimates will be provided after any further required seismic evaluations are completed.

PARSONS

100 Broadway
New York, NY 10005
Phone: 212-266-8300
Fax: 212-571-6825
www.parsons.com

TECHNICAL MEMORANDUM

FROM: Kian Siang Chau, P.E
NYSPE 082744

DATE: JULY 1, 2014

RE: FATIGUE EVALUATION
NEW YORK STATE DEPARTMENT OF TRANSPORTATION
D031085; PIN 3501.60; I-81

BIN: 1031549 (I-81 / E Colvin St.)

This memorandum documents a fatigue evaluation conducted for the existing Interstate 81 Viaduct Project. Existing structures with AASHTO Category D, E, and E' fatigue-prone details require 100% hands-on inspection unless proven to be exempt. The purpose of the evaluation is to assess the remaining life of fatigue-prone components.

EVALUATION PROCEDURES

The fatigue evaluation was performed in accordance with the AASHTO Guide Specification for Fatigue Evaluations of Existing Steel Bridges, 1990. Fatigue-prone welds identified in the biennial inspection reports were located on record drawings and confirmed visually in the field. Additional information concerning fatigue-prone welds located in BIN folders was also obtained and reviewed prior to inspection.

EVALUATION RESULTS

The results of the fatigue evaluation of the existing bridge are shown below.

Fatigue Detail Location	Remaining Safe Fatigue Life (Years)	Remaining Mean Fatigue Life (Years)
Interior Girders, End of Bottom Flange Cover Plate	8.55	181.77
Exterior Girders, End of Bottom Flange Cover Plate	12.68	202.11

IN-DEPTH INSPECTION REPORT

D031085 P.I.N. 3501.60

ELEMENT SPECIFIC BRIDGE WORK

B.I.N. 3/3 1031559

TEAM LEADER George H Stam, P.E. 056216
NYSPE LICENSE #

ASSISTANT TEAM LEADER Timothy Olmstead

FEATURE CARRIED I-81

FEATURE CROSSED East Castle Street

DATE FIELD WORK BEGAN 3/31/14

DATE FIELD WORK COMPLETED 3/31/14

TABLE OF CONTENTS

- STRUCTURE IDENTIFICATION
- INTRODUCTION
- PROJECT LOCATION MAP
- IN-DEPTH CONDITION DOCUMENTATION
- PLANS & SKETCHES
- IN-DEPTH PHOTO DOCUMENTATION
- ASBESTOS SAMPLING SURVEY
- LATEST BIENNIAL INSPECTION REPORT

STRUCTURE IDENTIFICATION

a. Bridge Identification Number (BIN):	3/3 1031559
b. Reference Marker:	81I 3303 2033
c. Region:	NYSDOT Region 3
d. County:	Onondaga
e. City:	Syracuse
f. Feature Carried:	I-81
g. Feature Crossed:	East Castle Street
h. Orientation:	North

INTRODUCTION

a. Bridge History

i. Year Built:	1965
ii. Bridge Type:	Three Span, Steel Multi-girder
iii. Bridge Length:	158
iv. Out-to-Out Width:	94 feet
v. Skew Angle:	20°
vi. Structural Ratings and Rankings	
1. Federal Sufficiency:	85.1 (Sept. 2013)
2. Condition Rating:	5.254 (Sept. 2013)
3. General Recommendation:	6 (Sept. 2013)
vii. Live Load Posting (HS25):	No
viii. National Highway System (NHS):	Yes
ix. Previous work Done:	1985 – Clean and paint metal surfaces 1998 – Asbestos testing 2006 – Concrete substructure repairs and bearing restoration 2008 – Concrete substructure repairs and bearing restoration 2008 – Clean and repair joints 2013 – Full deck replacement
x. Planned Future Work:	N/A

b. Highway Classification

i. Functional Classification: Urban Principle Arterial - Interstate

ii. Traffic Volumes

YEAR	AADT
2014	91668
2034	136214
2054	202406

PROJECT LOCATION MAP



IN-DEPTH CONDITION DOCUMENTATION

NYS DEPT. OF TRANSPORTATION **SHEET: 1 OF 5**
BRIDGE INSPECTION REPORT **BIN: 1031559** **DATE: 3/31/2014**

FEATURE CARRIED: I-81 NB & SB **TEAM LEADER: G. STAM**
FEATURE CROSSED: EAST CASTLE STREET **ASSIST. TEAM LEADER: T. OLMSTEAD**

ITEM	REMARKS	PHOTO NO.
	GENERAL NOTE The entire bridge deck was replaced in 2013 with new precast deck panels. There are no joints at either approach of the bridge and the deck is continuous with the new precast concrete approach panels at the begin and end approaches. There is a sleeper slab at the begin of the begin concrete approach slab. There are joints at piers 1 and 2. The deck elements: curbs, safety walks, and railings; median barrier; and fascias were replaced with precast integral single slope parapets and median barrier.	
	BEGIN ABUTMENT ITEMS	
TP 349-22	Begin Abutment - Joint with Deck: Top of deck items were not inspected.	
TP 349-24	Begin Abutment – Bearings: The begin bearings are expansion. All of the bearings are in generally good condition, however, the bearings are painted and there is no evidence of movement of the bearings at 40 ºF (Photo 1).	1
TP 349-26	Begin Abutment - Seat and Pedestals: There are stub abutments, therefore no seat. Pedestal P1 has concrete or grout overpour on the top (Photo 2). The overpour is hollow sounding throughout. At the right side of the top the underlying pedestal concrete is visible. There is 1.5 square foot area of hollow sounding concrete and the remainder appears sound (Photo 3). The overpour surrounds a portion of the bearing masonry plate; however, it does not impeded movement of the bearing slider or rocker. On the remainder of the pedestals, there are scattered cracks and hollow sounding areas as illustrated on the Begin Abutment Deterioration Sketch (Photo 1).	1,2,3
TP 349-28	Begin Abutment – Backwall: There are scattered cracks and hollow sounding areas as illustrated on the Begin Abutment Deterioration Sketch. Significant areas are noted below: • Left fascia bay - tight mapcracking with 2 square feet of hollow sounding area in a patch at the top (Photo 4). • Pedestal bay 6 - at mid-height, there is 6 square feet of hollow sounding concrete in a patched area (Photo 5). • Pedestal bay 7 – vertical and horizontal cracks, and 1.5 square foot area of hollow sounding concrete (Photo 6).	 4 5 6
TP 349-30	Begin Abutment – Stem: There are stub abutments, therefore no stem.	
	END ABUTMENT ITEMS	
TP 349-23	End Abutment - Joint with Deck: Top of deck items were not inspected.	

ITEM	REMARKS	PHOTO NO.
TP 349-25	End Abutment – Bearings: The end bearings are fixed. All of the bearings are in generally good condition. The following bolts are leaning slightly (Photo 7): Bearing / Bolt Side / Lean Direction B2 / Right / End B3 / Left / Right B4 / Left / Right B5 / Left & Right / Begin B6 / Left & Right / Begin B8 / Right / End & Right B9 / Left / Right	7
TP 349-27	End Abutment - Seats and Pedestals: There are stub abutments, therefore no seat. At the pedestals, there are scattered mostly hairline cracks as illustrated on the End Abutment Deterioration Sketch (Photo 8). No significant hollow sounding areas were detected.	8
TP 349-29	End Abutment – Backwall: There are scattered cracks and hollow sounding areas on the backwall as illustrated on the End Abutment Deterioration Sketch (Photos 9 & 10).	9,10
TP 349-31	End Abutment – Stem: There are stub abutments, therefore no stem.	
	APPROACH ITEMS - Approach items were not inspected.	
	DECK ITEMS - Deck items were not inspected.	
	SUPERSTRUCTURE ITEMS	
TP 350-27	Structural Deck: Structural deck items were not inspected.	
TP 350-28	Primary Members: The primary members are in good condition (Photo 11). No significant section loss was noted. The web crippling condition at the end of girder G14 in span 1 reported in the 2013 Biennial Inspection has been repaired with a 0.5 inch thick plate welded on the right side of girder G14 over the bearing and a 5 inch x 5 inch angle bolted on the inside stiffener (Photo 12).	11,12
	There are utility support angles welded to the top of the bottom flanges at the begin and ends of all girders except girder G16 in span 2. A broken weld was noted at the begin side of the angle at the begin right side of G6 (Photo 13); and the weld at the end right side of girder G12 (Photos 14 & 15). The welds are completely broken and no cracks into the primary member base metal were detected.	13,14,15
TP 350-29	Secondary Members: The secondary members (diaphragms) are in good condition. No significant section loss was noted.	

ITEM	REMARKS	PHOTO NO.
TP 350-30	Paint: The girders and diaphragms have been recently partially painted. The entire fascia girders; and the interior girder ends and end diaphragms have been painted in all spans (Photos 16, 17 & 11). The top and bottom flanges of the interior girders; and the ends and flanges of the diaphragms in spans 2 and 3 have also been painted. The paint system is in good condition.	11,16,17
TP 350-31	Joints: The top of deck was not inspected. The pier joints are armorless with elastomeric concrete headers and filled elastic material seal. From below deck, the styrofoam joint bond breaker material is hanging down in several bays. The seal material has pulled away from the header with numerous up to 0.5 inch wide gaps allowing runoff to flow down onto the superstructure and substructure elements below. Specific locations are noted below: Pier 1 • Girder bay 2 – there are several gaps in the joint seal allowing sand and runoff to flow onto the bearing B3, pedestal P3 and the cap beam below (Photos 18 & 19). • Girder bay 7 – there is no seal at the median allowing runoff to leak onto the deck panel below (Photo 20). • Girder bay 12 - there are several gaps in the joint seal allowing sand and runoff to flow onto the bearing B13, pedestal P13 and the cap beam below (Photos 21 & 22). Pier 2 • Girder bay 3 – there are several gaps in the joint seal allowing sand and runoff to flow onto the bearing B4, pedestal P4 and the cap beam below (Photo 23). • Girder bay 7 – there is no seal at the median allowing runoff to leak onto the deck panel below (Photo 24). • Girder bay 12 - there are several gaps in the joint seal allowing sand and runoff to flow onto the bearing B13, pedestal P13 and the cap beam below (Photos 25, 26, & 27). The runoff is seeping onto the underside of the end of span 2 deck panels in bays 11 and 12, the top flanges of girders G12 and G13; and the end diaphragm in bay 12 (Photos 28 & 29).	18,19 20 21,22 23 24 25,26,27 28,29
	<u>PIER ITEMS</u>	
TP 350-33	Pier – Bearings: The begin side bearings are fixed and the end side bearings are expansion on both piers. Generally the bearings are in good condition. Typical, the expansion bearings are slightly contracted at 40 ºF and all the bearings show evidence of movement. The following specific conditions were observed: Pier 1 • Expansion bearing B2 – left anchor nut is up off the keeper plate 1 inch (Photo 30). • Expansion bearing B6 – bearing has concrete or group overpour at the begin and right side partially restricting the movement of the bearing slider (Photo 31). • Expansion bearing B7 – right bolt bent toward end. • Expansion bearing B9 – left anchor bolt is up off the keeper plate 1 inch (Photo 32). • Expansion bearing B13 – left anchor bolt is missing (Photo 21). • Expansion bearing B13 – right anchor bolt is up off the keeper plate 0.5 inch.	30 31 32 21

ITEM	REMARKS	PHOTO NO.
	Pier 2	
	• Expansion bearing B7 – right anchor bolt sheared off and dislodged (Photo 33).	33
	• Expansion bearing B13 – end right keeper plate anchor nut up off the keeper plate 1 inch (Photo 26).	26
TP 350-34	Pier – Pedestals: The pedestals have locations of hollow, cracked and spalled concrete as illustrated on the Pier Deterioration Sketches. Significant areas are noted below: Pier 1	
	• Pedestal P 2 – top left and left side are cracked with 3.5 square feet of hollow sounding concrete (Photo 34).	34
	• Pedestal P3 – cracked on the end face and 1.0 square foot of hollowness at the end and top edge.	
	• Pedestal P5 – end face is cracked with 1 square foot of hollowness and at the top edge an 8 inches wide x 2.5 inches high x 2 inches deep spall with exposed reinforcement (Photo 35). The hollowness extends 1 square foot on the top to the end side bearing masonry plate.	35
	Pier 2	
	• Pedestal P1 – begin left side is cracked along the top edge and vertically (Photo 36).	36
	• Pedestal P4 – cracked on the left side and front face, and 1 square foot of hollow sounding concrete on the front face (Photos 23 & 37).	23,37
	• Pedestal P12 – cracked on the left side.	
	• Pedestal P13 – cracked on the left side of the begin face and begin right edge and side.	
TP 350-37	Pier – Cap Beam: The cap beams have scattered cracks and hollow sounding areas as illustrated on the Pier Deterioration Sketches. Significant areas are noted below: Pier 1	
	• Begin face @ column bay 1 – several vertical hairline cracks at the bottom half of the beam (Photo 38).	38
	• Begin face @ column bay 5 – mapcracking over 50% of the surface (Photo 22).	22
	• End face @ column bay 1 – vertical crack and 2.5 square feet of hollow sounding concrete (Photo 39).	39
	• Under side of column bay 5 – 7 square feet of hollow sounding concrete (Photo 40).	40
	Pier 2	
	• Begin face @ column bay 1 – cracking and 2 square foot area of hollowness near the right side.	
	• Begin face @ column bay 5 – tight mapcracking over 25% of the surface near the right side.	
	• End face @ column bay 1 – tight mapcracking over 25% of the area near the left side and cracking above column C1 (Photo 41).	41
	• End face @ column C4 – 10 inches wide x 8 inches high x 2 inches deep spall with exposed rusted reinforcement at the bottom edge (Photo 42).	42
	• End face @ at Pedestal P9 – cracked with 2 square foot area of hollowness (Photo 43).	43
	• End face @ column bay 5 - tight mapcracking over the right half of the bay (Photo 27).	27

ITEM	REMARKS	PHOTO NO.
	Pier – Columns: The pier columns have scattered cracks and hollow sounding areas as illustrated on the Pier Deterioration Sketches. Significant areas are noted below: Pier 1 • Column C3 @ begin face – a vertical crack with efflorescence at mid height (Photo 44).	44
	Pier 2 • Column C1 @ end face – 4.5 square foot cracked and hollow area at the top half (Photo 45).	45
	• Column C6 @ end face – full height vertical crack with efflorescence (Photo 46).	46
	UTILITIES ITEMS	
TP 350-43	Lighting: None.	
TP 350-44	Sign Structure: None.	
TP 350-45	Utilities and Support: None visible.	
	SPECIAL EMPHASIS ITEMS Special Emphasis Inspection Required: • Non-Redundant/Fracture Critical Members – No • Pin and Hangers – No • Fatigue-Prone Welds – Yes • Non-Categorized Fatigue-Prone Details – No • Other – Yes. Specified below. Special Emphasis Details: • Partial length cover plates in spans 1 & 3 on girders G2 thru G13; and in span 2 girders G2 thru 8. • Lighting junction box support angles welded to the web in a tension zone below the neutral axis in span 2 girder G2 right side at end. • Utility support welded connections to bottom flanges of span 2 girders G1 thru G15.	

PLANS & SKETCHES

F.I.C. 647

FED. RD. REG. NO.	STATE	FEDERAL AID PROJECT NO.	SHEET NO.
	NEW YORK	I-81-2(80)	273

INTERSTATE ROUTE 505
SYRACUSE CITY LINE TO SIZER STREE

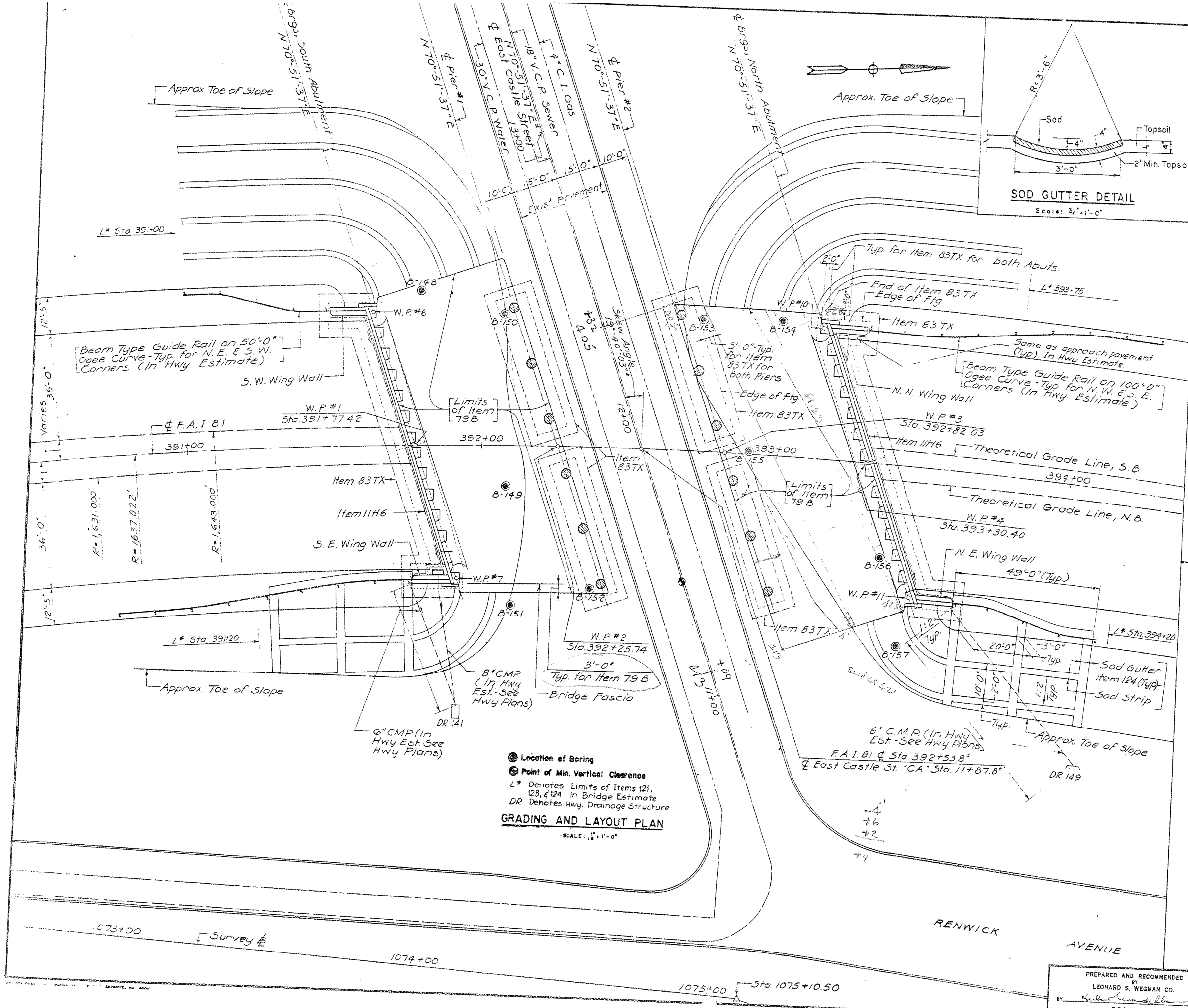

SOD GUTTER DETAIL
Scale: 3/4" = 1'-0"

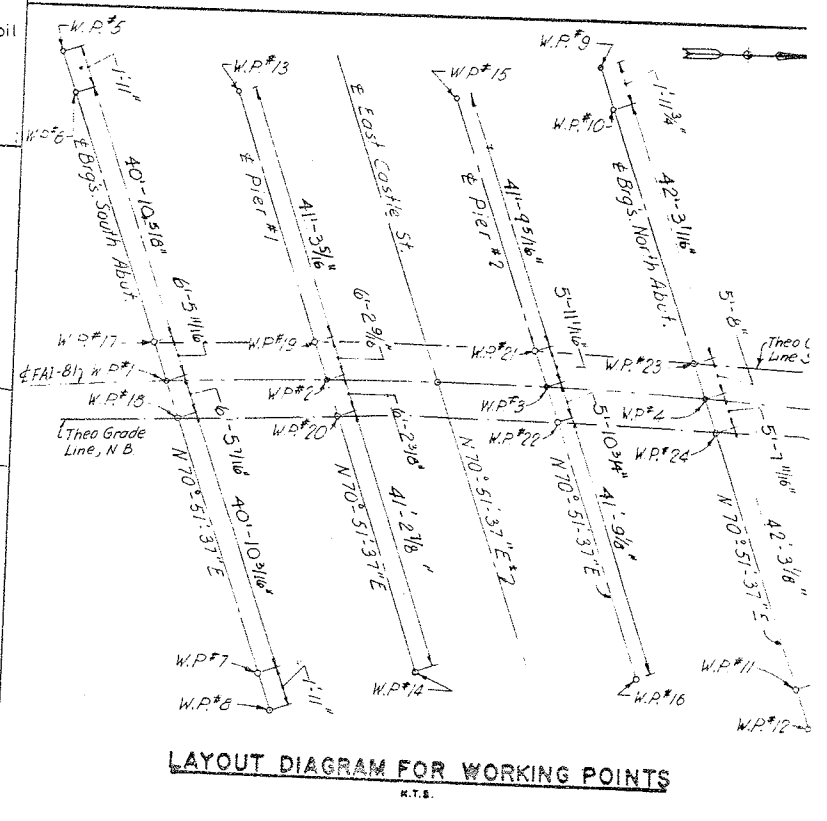

LAYOUT DIAGRAM FOR WORKING POINTS
N.T.S.

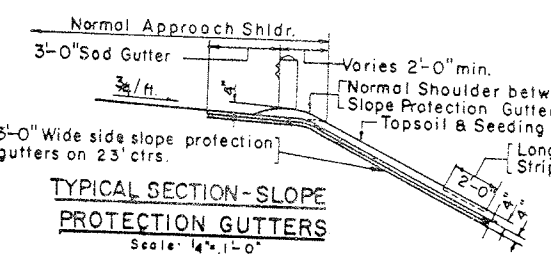

TYPICAL SECTION - SLOPE PROTECTION GUTTERS
Scale: 1/4" = 1'-0"

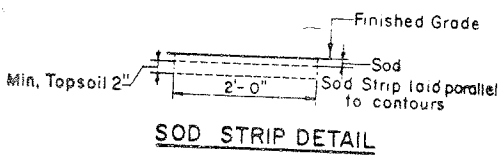

SOD STRIP DETAIL
Scale: 3/4" = 1'-0"

NOTES:
1. GRADING AND LAYOUT PLAN SHOWN WITH BRIDGE SUPERSTRUCTURE AND CAP BEAM OF PIERS REMOVED.
2. EXISTING UTILITIES SHOWN ON THIS DRAWING ARE TO REMAIN.
3. SEE HWY. PLANS FOR ADDITIONAL DRAINAGE INFORMATION.

PREPARED AND RECOMMENDED BY
LEONARD S. WEGMAN CO.
BY _____
N.Y.S. P.E. LIC. 23287 DATE 12-9-63

F.A.I. 81 OVER EAST CASTLE STREET

GRADING AND LAYOUT PLAN

DRAWN BY: MC	CHECKED BY: FG RP
REVIEWED BY: [illegible]	DATE 12-9-63

LEONARD S. WEGMAN CO.
ENGINEERS
235 EAST 45TH STREET, NEW YORK 17, N.Y.

SCALE AS NOTED
DWG. NO.

F.I.C. 64-7

FED. RD. REG. NO.	STATE	FEDERAL AID PROJECT NO.	SHEET NO.
	NEW YORK	I-81-2(80)	276

INTERSTATE ROUTE 505
SYRACUSE CITY LINE TO SIZER STRI

NOTES:

1. FOR SUBSTRUCTURE NOTES SEE DWG. NO. M-6.
2. TYPICAL ABUTMENT SECTION, TYPICAL WING WALL SECTION, WING WALL ELEVATIONS AND SECTIONS 1-1 & 2-2 ARE SHOWN ON DWG. NO. M-7.
3. SECTION A-A AND DETAILS OF JOINTS AND CATCH BASIN ARE SHOWN ON DWG. NO. M-8.
4. ADDITIONAL PAYMENT ITEMS AND LIMITS FOR ABUTMENT AND WING WALLS ARE SHOWN ON DWGS. NO. M-2, M-4 & M-7.
5. FOR RAILING DETAILS AND SPACING OF RAILING POSTS SEE DWGS. NO. M-3 AND M-17.
6. ALL BAR REINFORCEMENT SHOWN ON THIS DRAWING SHALL BE PAID FOR UNDER ITEM 28.
7. SEE DWG. NO. M-12 FOR BAR SCHEDULE.

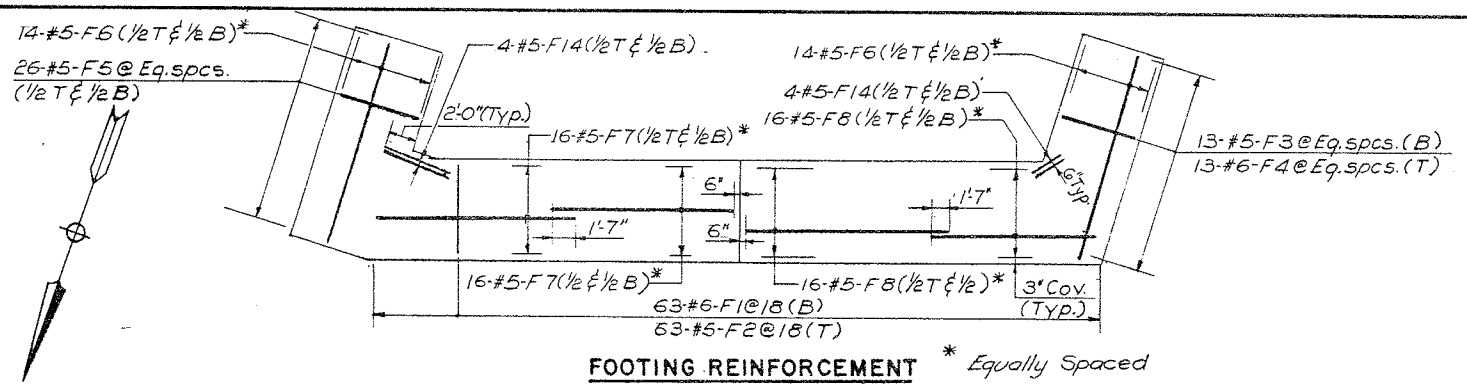

FOOTING REINFORCEMENT * Equally Spaced

N.T.S.

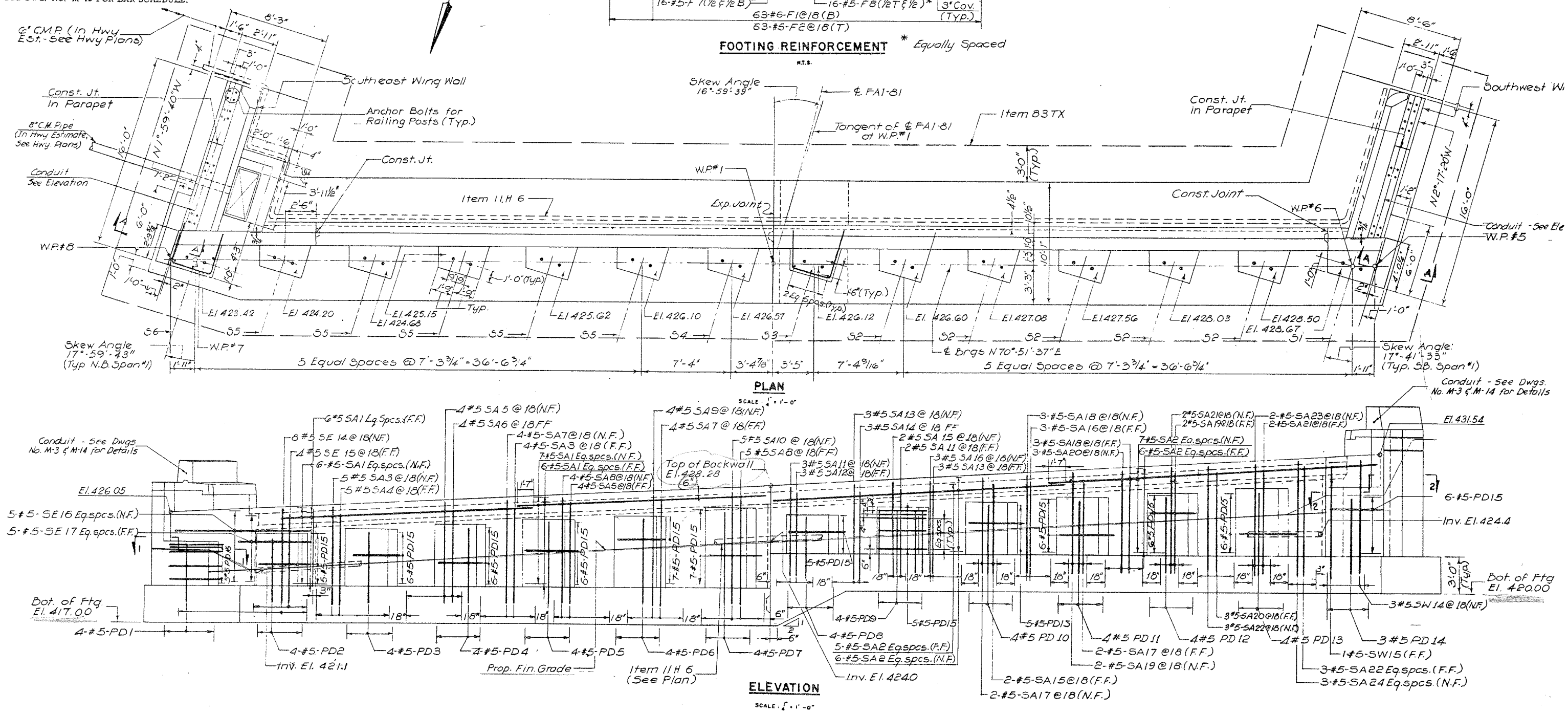

PLAN

SCALE: ¼" = 1'-0"

ELEVATION

SCALE: ¼" = 1'-0"

PREPARED AND RECOMMENDED BY
LEONARD S. WEGMAN CO.
BY Herbert Lawrence
N.Y.S. P.E. LIC. 23287 DATE 12-9-63

F.A.I. 81 OVER EAST CASTLE STREET

SOUTH ABUTMENT

DRAWN BY:	CHECKED BY:
BJD R.D.	WNL S.P.
REVIEWED BY:	DATE
Lawrence	12-9-63

LEONARD S. WEGMAN CO.
ENGINEERS
235 EAST 45TH STREET, NEW YORK 17, N.Y.

SCALE AS NOTED
DWG. NO. M

F.I.C. 64-7

FED. RD. REG. NO.	STATE	FEDERAL AID PROJECT NO.	SHEET NO.	T SH
	NEW YORK	I-81-2(80)	277	2

INTERSTATE ROUTE 505
SYRACUSE CITY LINE TO SIZER STREET

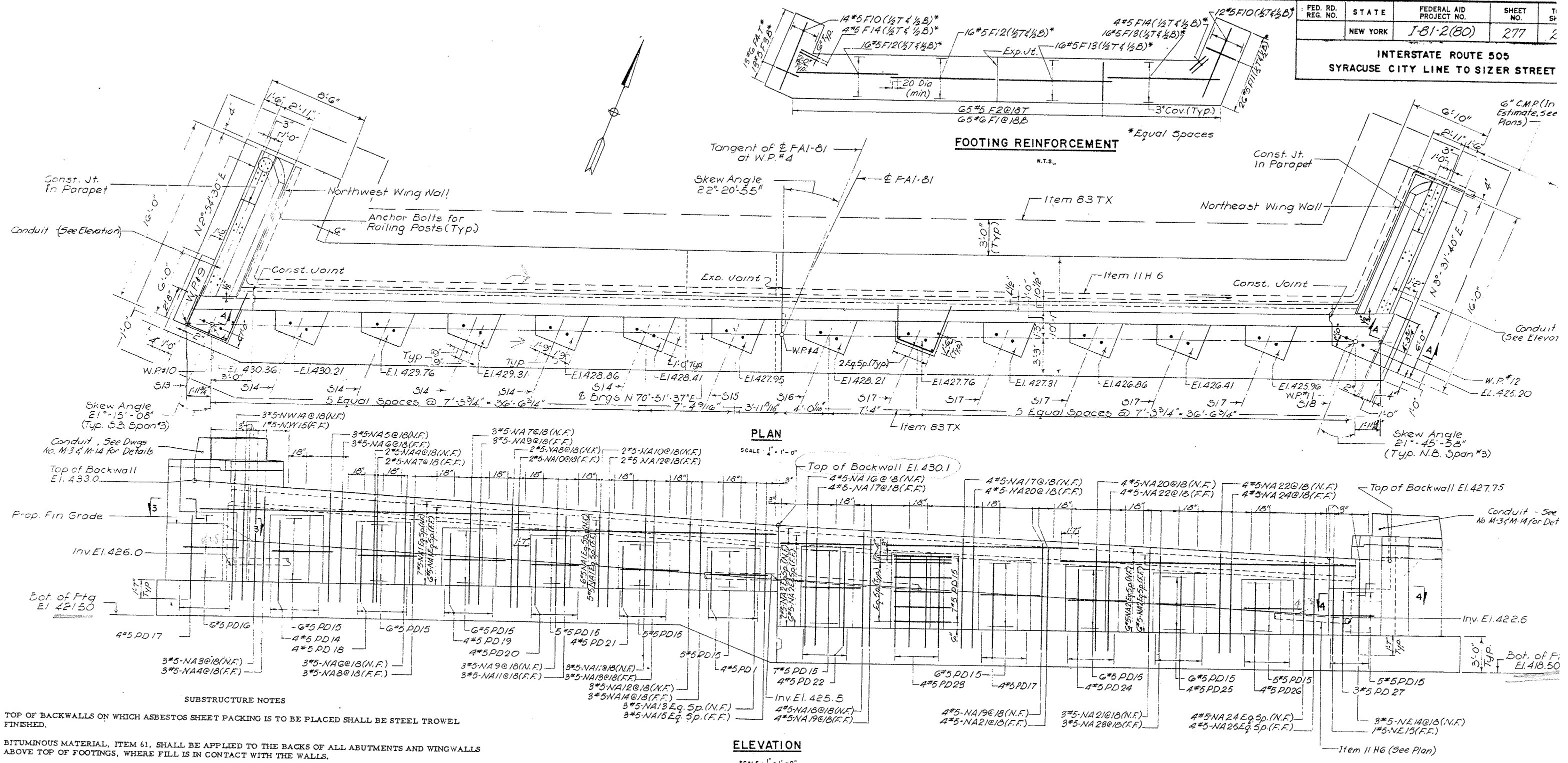

SUBSTRUCTURE NOTES

1. TOP OF BACKWALLS ON WHICH ASBESTOS SHEET PACKING IS TO BE PLACED SHALL BE STEEL TROWEL FINISHED.
2. BITUMINOUS MATERIAL, ITEM 61, SHALL BE APPLIED TO THE BACKS OF ALL ABUTMENTS AND WINGWALLS ABOVE TOP OF FOOTINGS, WHERE FILL IS IN CONTACT WITH THE WALLS.
3. EPOXY PROTECTIVE COATING FOR CONCRETE SHALL BE APPLIED TO THE FOLLOWING SURFACES:
   STUB ABUTMENTS - TOP AND SIDE SURFACES OF PEDESTALS, FACES OF BACKWALLS AND INSIDE FACES OF THE END CURTAIN WALLS. ALL SURFACES TO BE COVERED ABOVE THE FOOTING LEVEL.
   PIERS - ALL PEDESTAL SURFACES AND THE TOP SURFACES OF PIER BETWEEN PEDESTALS INCLUDING THE EDGE CHAMFER AT TOP EDGE OF PIER.
4. UNLESS OTHERWISE SHOWN, THE MINIMUM CONCRETE COVER FOR REINFORCING STEEL IN THE SUBSTRUCTURE SHALL BE AS FOLLOWS:

FOOTINGS (INCLUDING UNFORMED BOTTOM)	3"
WALLS ABOVE FOOTINGS	2"
BEAMS AND COLUMNS OF PIERS	2"

5. ABUTMENTS SHALL BE FOUNDED ON SELECTED GRANULAR FILL. FOR DESIGN PURPOSES, THE MAXIMUM SOIL PRESSURE IS 1.5 TONS PER SQUARE FT.

   PIERS SHALL BE FOUNDED ON CAST-IN-PLACE CONCRETE PILES. SEE NOTES AND DETAILS OF CAST-IN-PLACE CONCRETE PILES ON DWG. NO. M-9.

6. ITEM 83 TX TO BE USED ONLY WHERE DEPTH OF EXCAVATION EXCEEDS 5 FEET.

ELEVATION

SCALE 1" = 1'-0"

NOTES:
1. TYPICAL ABUTMENT SECTION, TYPICAL WING WALL SECTION, WING WALL ELEVATIONS AND SECTIONS 3-3 & 4-4 ARE SHOWN ON DWG. NO. M-7.
2. SECTION A-A AND DETAILS OF JOINTS ARE SHOWN ON DWG. NO. M-8.
3. ADDITIONAL PAYMENT ITEMS AND LIMITS FOR ABUTMENT AND WING WALLS ARE SHOWN ON DWGS. NO. M-2, M-4, M-5 & M-7.
4. FOR DETAILS AND SPACING OF RAILING POSTS SEE DWGS. NO. M-3 & M-17.
5. ALL BAR REINFORCEMENT SHOWN ON THIS DRAWING SHALL BE PAID FOR UNDER ITEM 28.
6. SEE DWG. NO. M-12 FOR BAR SCHEDULE.

PREPARED AND RECOMMENDED BY LEONARD S. WEGMAN CO.
BY _____
N.Y.S. P.E. LIC. 23287 DATE 12-9-63

F.A.I. 81 OVER EAST CASTLE STREET
NORTH ABUTMENT

DRAWN BY:	CHECKED BY:	LEONARD S. WEGMAN CO. ENGINEERS	SCALE AS NOTED
B.D. K.S.	W.N.L. R.L.	235 EAST 45TH STREET, NEW YORK 17, N.Y.	DWG. NO. M-6
REVIEWED BY:	DATE 12-9-63		

1001334 Fed. Aid 041-1

FED. RD. REG. NO.	STATE	FEDERAL AID PROJECT NO.	SHEET NO.
	NEW YORK	I-81-2(80)	278

INTERSTATE ROUTE 505
SYRACUSE CITY LINE TO SIZER STR

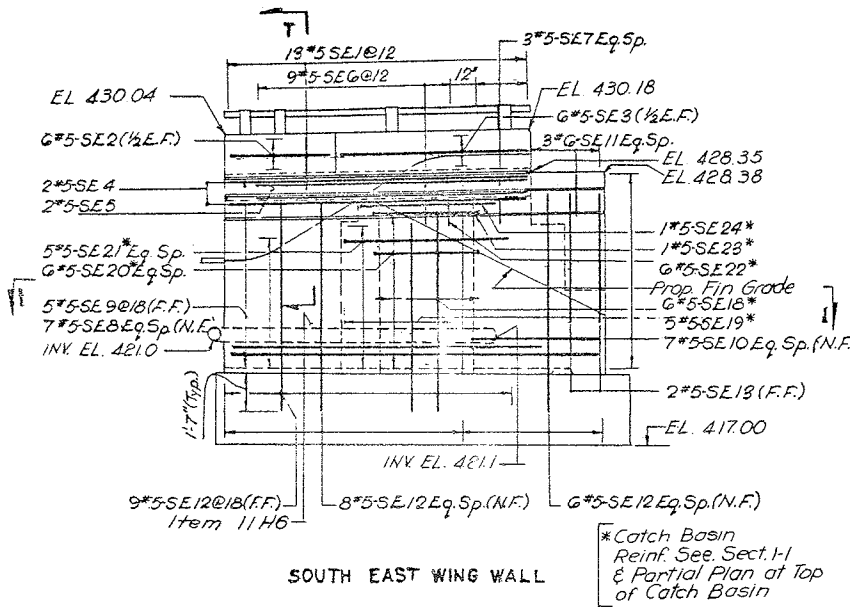

SOUTH EAST WING WALL

*Catch Basin Reinf. See Sect. 1-1 & Partial Plan at Top of Catch Basin

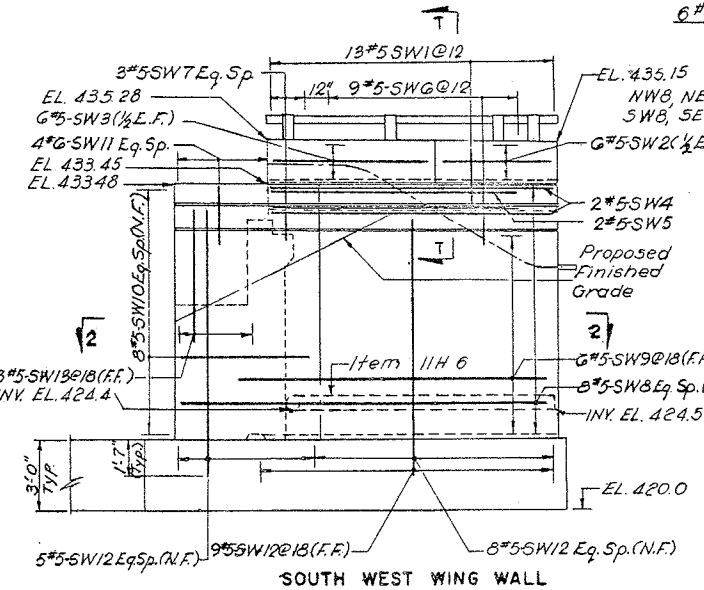

SOUTH WEST WING WALL

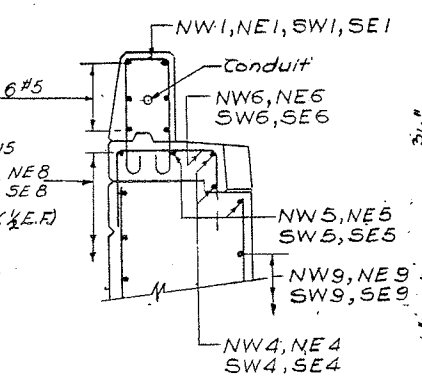

For detail & dimensions see Detail "A"

SECTION T-T

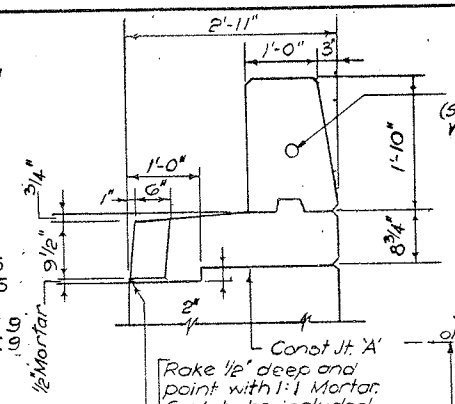

Rake ½" deep and point with 1:1 Mortar. Cost to be included in the unit price bid for curb items

Railing not shown. For Reinforcement see Section T-T

DETAIL "A"

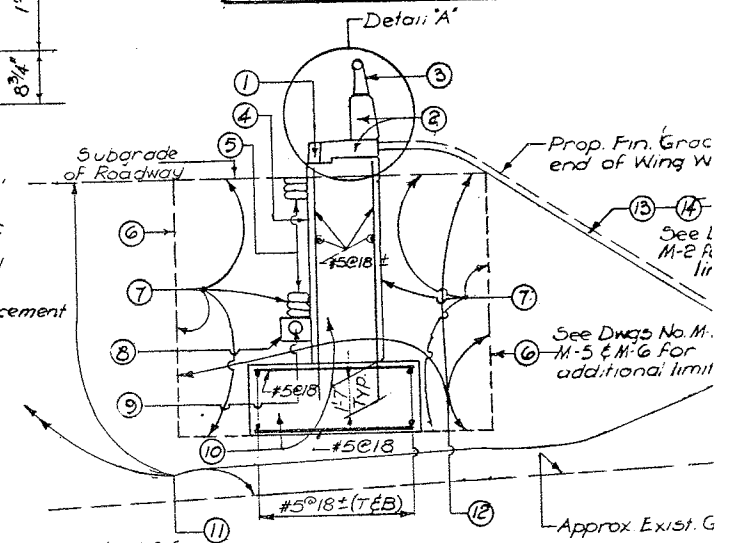

KEY TO DESIGNATIONS

1.	ITEM 955	STONE CURB (GRANITE)
2.	ITEM 18	CLASS A CONCRETE FOR STRUCTURES
3.	ITEM 37AL	ALUMINUM RAILING (ONE RAIL)
4.	ITEM 61	BITUMINOUS MATERIAL
5.	ITEM 24A	BAGGED SCREENED AGGREGATE
6	ITEM 83TX	TEMPORARY SHEET PILING
7.	———	BACKFILL WITH SUITABLE EXCAVATED MATERIAL (INCLUDED IN ITEM 5)
8.	ITEM 2UF	UNDERDRAIN FILTER (1'-6" x 1'-6")
9.	ITEM 11H6	PERFORATED CORRUGATED METAL PIPE UNDERDRAIN - 6" DIA.
10.	ITEM 29	CLASS B CONCRETE FOR STRUCTURES
11.	ITEM 2EF-B	SELECTED GRANULAR FILL
12.	ITEM 5	TRENCH, CULVERT AND BRIDGE EXCAVATION
13.	ITEM 121	TOPSOIL PLACED FROM STOCKPILES
14.	ITEM 123	SEEDING
15.	ITEM 124	SODDING
16.	ITEM 79B	CONCRETE BLOCK PAVING
17.	———	EMBANKMENT (IN HWY ESTIMATE)
18.	———	CONSOLIDATE FILL TO THIS LINE PRIOR TO ABUTMENT AND WING WALL CONSTRUCTION

TYPICAL WING WALL SECTION

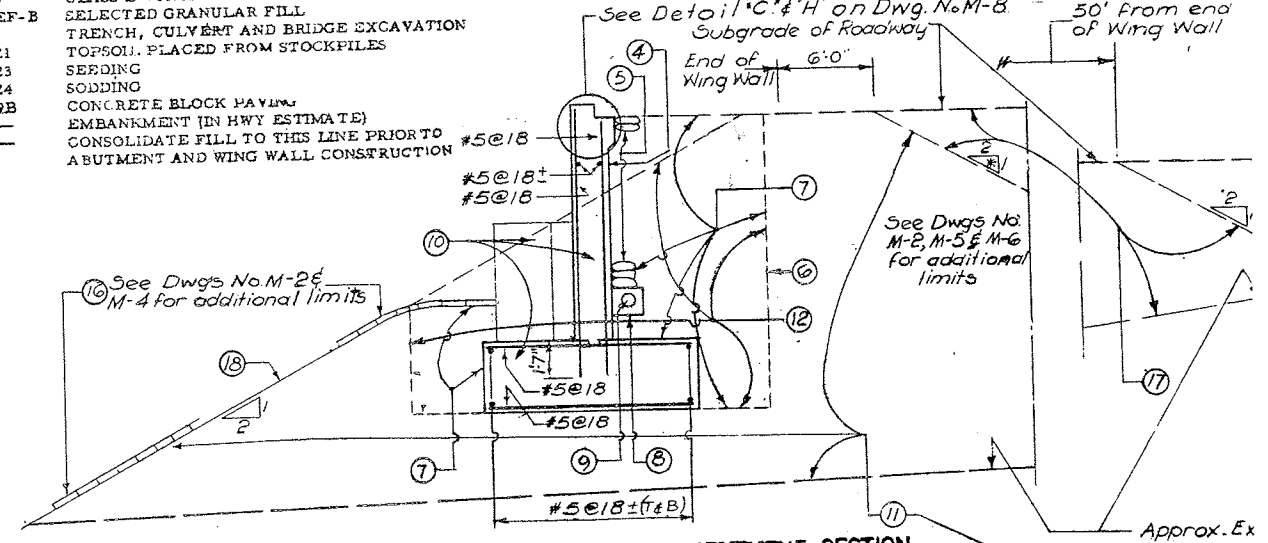

TYPICAL ABUTMENT SECTION

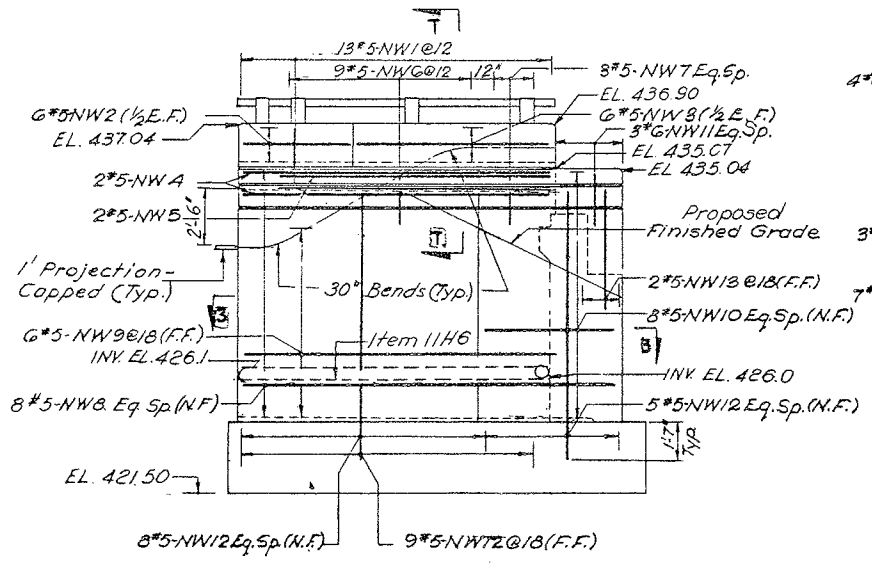

NORTH WEST WING WALL

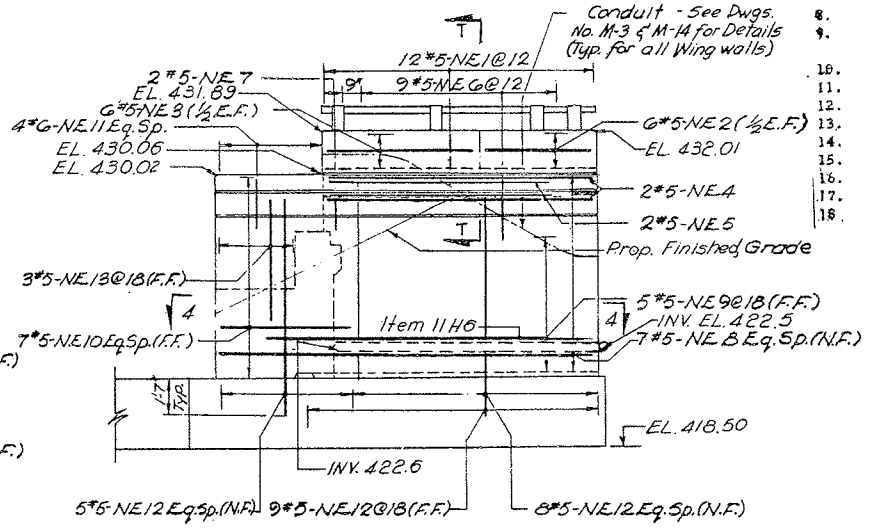

NORTH EAST WING WALL

WING WALL ELEVATIONS

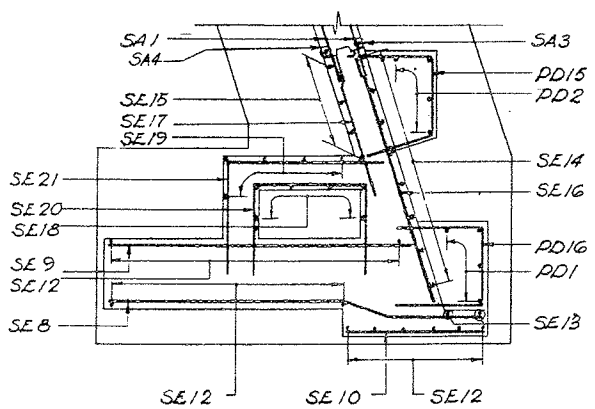

SECTION 1-1

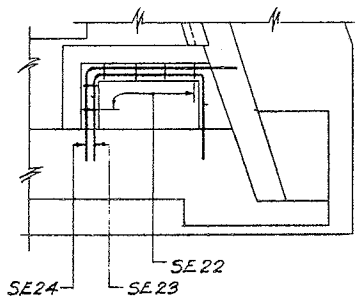

PARTIAL PLAN AT TOP OF CATCH BASIN

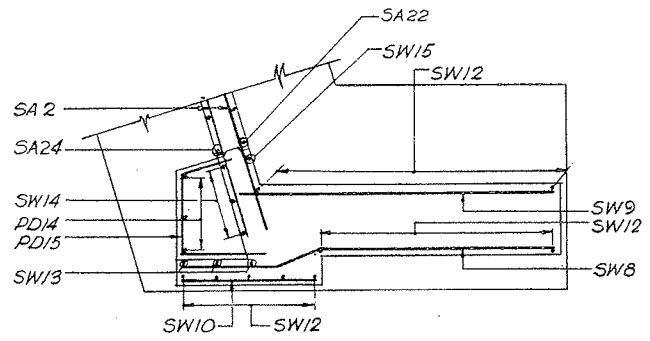

SECTION 2-2

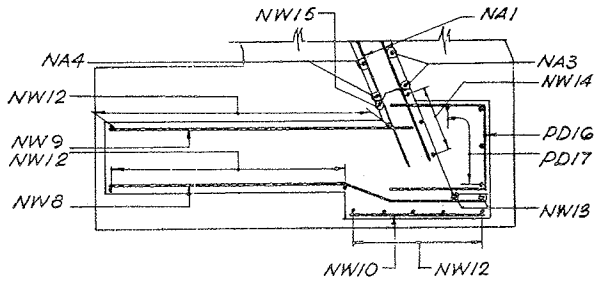

SECTION 3-3

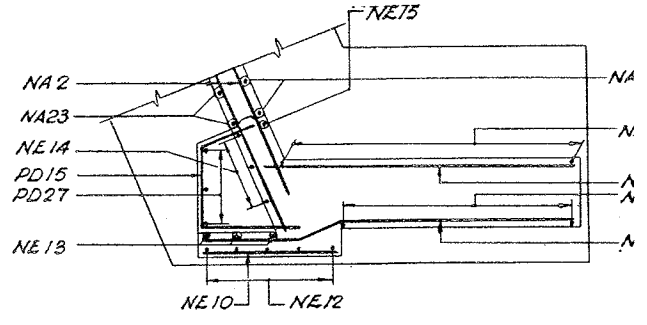

SECTION 4-4

NOTES:
1. FOR SUBSTRUCTURE NOTES SEE DWG. NO. M-6.
2. FOR RAILING DETAILS AND SPACING OF RAILING POSTS SEE DWGS. NO. M-3 & M-17.
3. SECTION A-A AND DETAILS OF JOINTS AND CATCH BASIN ARE SHOWN ON DWG. NO. M-8.
4. FOR ADDITIONAL PAYMENT ITEMS AND LIMITS SEE DWGS. NO. M-2, M-4 & M-5.
5. ALL BAR REINFORCEMENT SHOWN ON THIS DRAWING SHALL BE PAID FOR UNDER ITEM 28.
6. SEE DWG. NO. M-12 FOR BAR SCHEDULE.
7. SEE DWG. NO. M-8 FOR "WING WALL CONSTRUCTION PROCEDURE."

PREPARED AND RECOMMENDED BY
LEONARD S. WEGMAN CO.
BY _____
N.Y.S. P.E. LIC. 23287 DATE 12-9-63

F.A.I. 81 OVER EAST CASTLE STREET
ABUTMENT DETAILS

DRAWN BY:	CHECKED BY:	LEONARD S. WEGMAN CO. ENGINEERS	SCALE
B.B. R.S.	W.N.C. E.P.		
REVIEWED BY:	DATE	235 EAST 45TH STREET, NEW YORK 17, N.Y.	DWG. NO.
Leonard Wegman	12-9-63		

BRUNO PRESS INC. BROOKLYN 17, N.Y. REMOVAL NO. 44994

103/559 F.I.C. 64-7

FED. RD. REG. NO.	STATE	FEDERAL AID PROJECT NO.	SHEET NO.
	NEW YORK	I-81-2(80)	280

INTERSTATE ROUTE 505
SYRACUSE CITY LINE TO SIZER ST

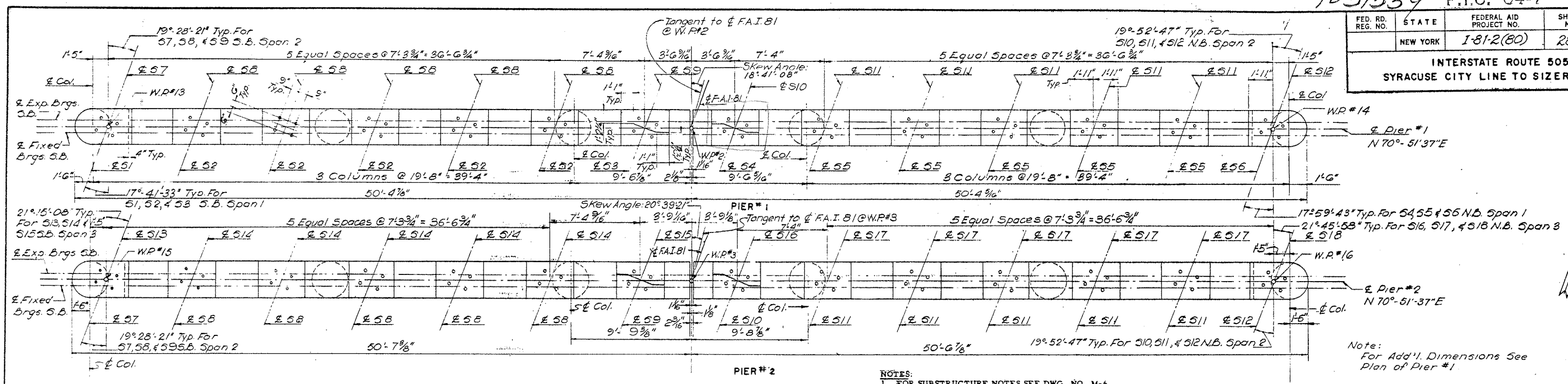

PIER # 2

PLAN

SCALE: 1/4" = 1'-0"

Note:
For Add'l. Dimensions See Plan of Pier #1

NOTES:
1. FOR SUBSTRUCTURE NOTES SEE DWG. NO. M-6.
2. FOR ADDITIONAL PAYMENT ITEMS AND LIMITS SEE DWGS. NO. M-2 & M-4.
3. FOR BEARING PEDESTAL DETAILS SEE DWG. NO. M-11

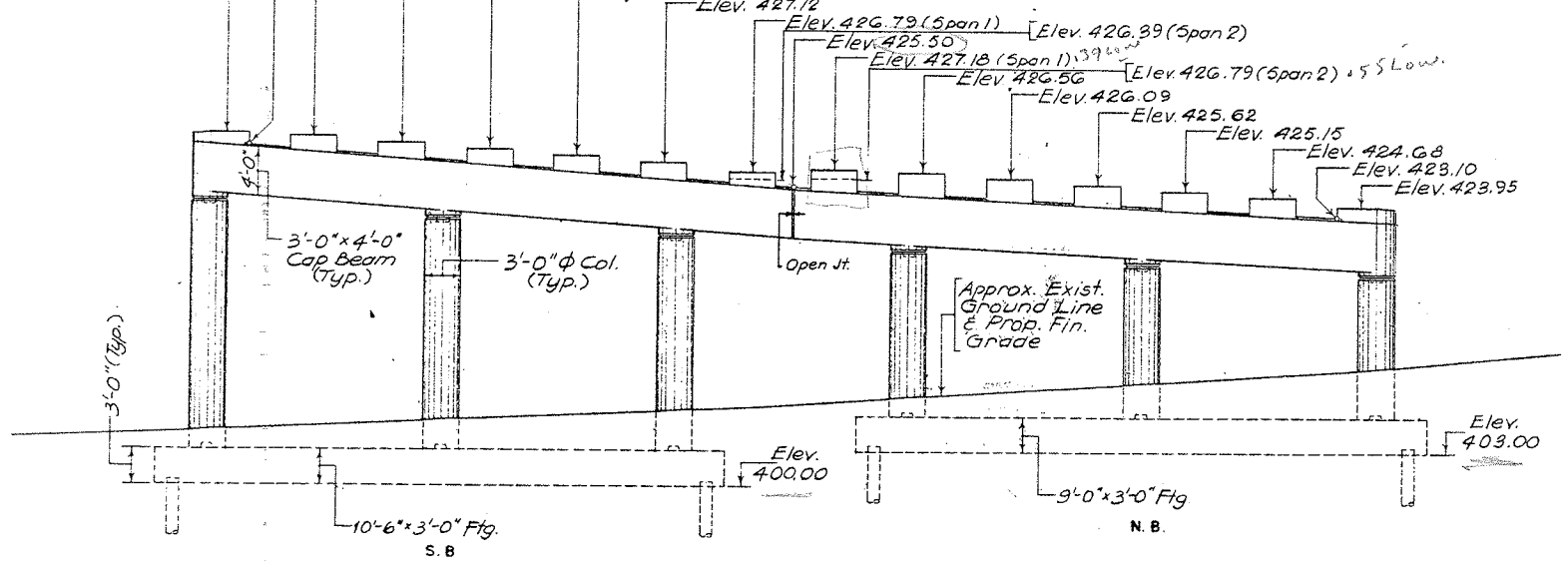

PIER # 1

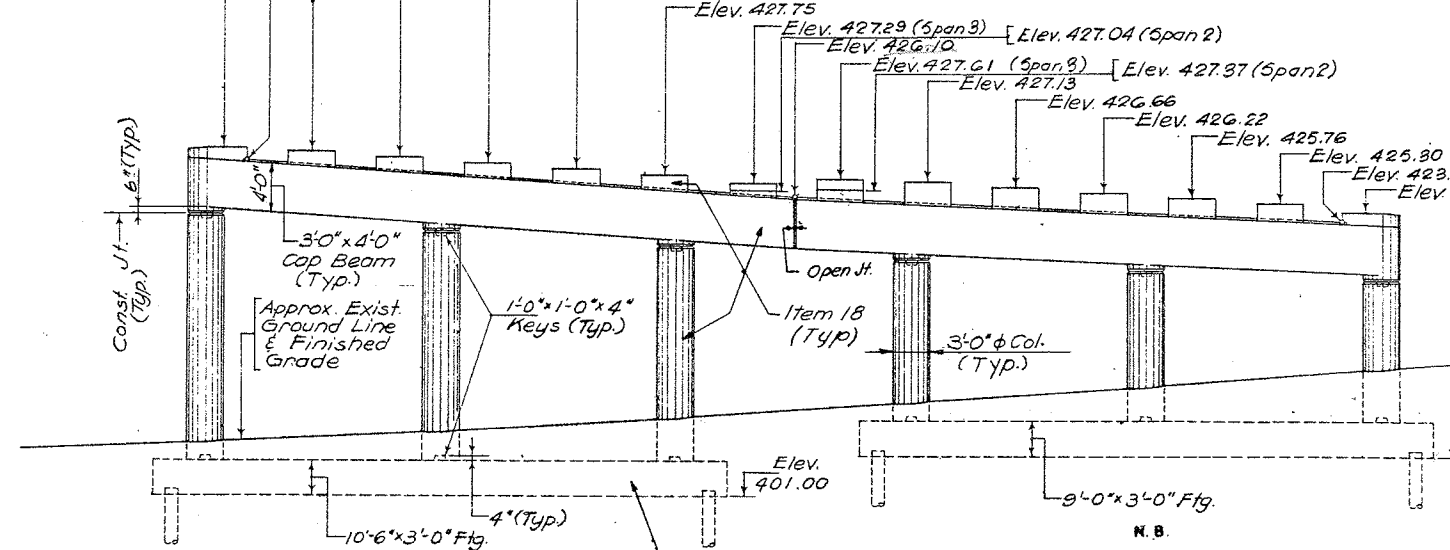

PIER # 2

ELEVATIONS

SCALE: 1/8" = 1'-0"

ESTIMATED LENGH OF PILES		
	S.B.	N.B.
PIER #1	65'	45' TO 70'
PIER #2	60'	60'

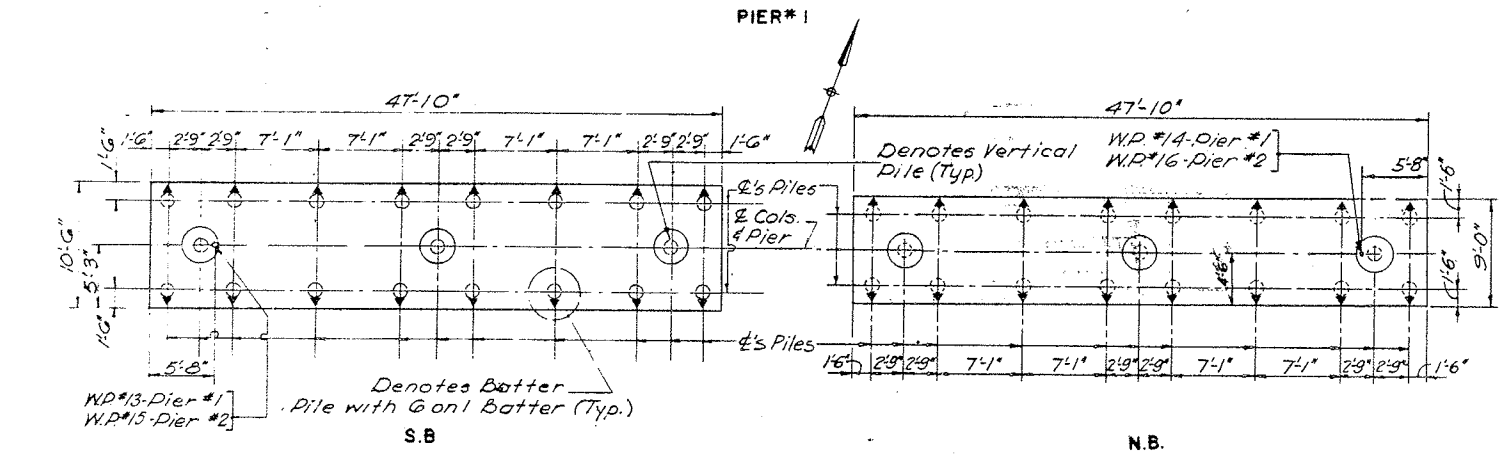

FOOTING & PILE LAYOUT PLAN FOR PIERS # 1 & # 2

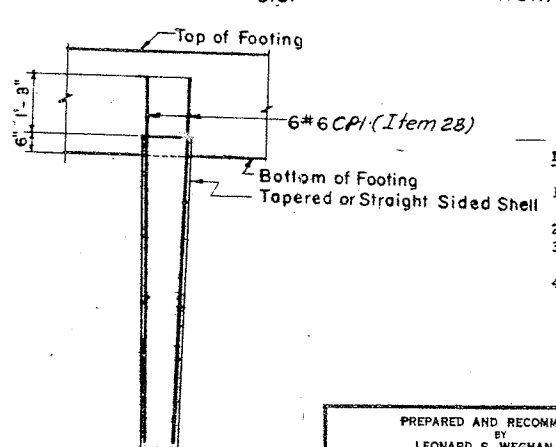

CAST-IN-PLACE CONC. PILE REINFORCEMENT

NOTES FOR CAST-IN-PLACE CONCRETE PILES:
1. ALL PILES USED ON THIS STRUCTURE ARE CAST-IN-PLACE CONCRETE PILES. (ITEM 85 C)
2. FOR DESIGN PURPOSES THE MAXIMUM PILE LOAD IS 35 TONS PER PILE.
3. ALL PILES SHALL BE DRIVEN TO A RESISTANCE OF 35 TONS PER PILE OR AS ORDERED BY THE ENGINEER.
4. FOR ESTIMATING PURPOSES THE LENGTH OF PILE IS ASSUMED AS SHOWN IN TABLE
   ○ DENOTES VERTICAL PILE
   ◁ DENOTES BATTER PILE BATTER TO BE 6 ON 1.

PREPARED AND RECOMMENDED BY
LEONARD S. WEGMAN CO.
BY _____
N.Y.S. P.E. LIC. 23287 DATE 12-9-63

F.A.I. 81 OVER EAST CASTLE STREET

PIERS

DRAWN BY: S.S.	CHECKED BY: J.C.	SCALE AS NOTED
REVIEWED BY:	DATE 12-9-63	DWG. NO.

LEONARD S. WEGMAN CO.
ENGINEERS
235 EAST 45TH STREET, NEW YORK 17, N.Y.

1031559 F.I.C. 64-7

FED. RD. REG. NO.	STATE	FEDERAL AID PROJECT NO.	SHEET NO.
	NEW YORK	I-81-2(80)	281

INTERSTATE ROUTE 505
SYRACUSE CITY LINE TO SIZER STREET

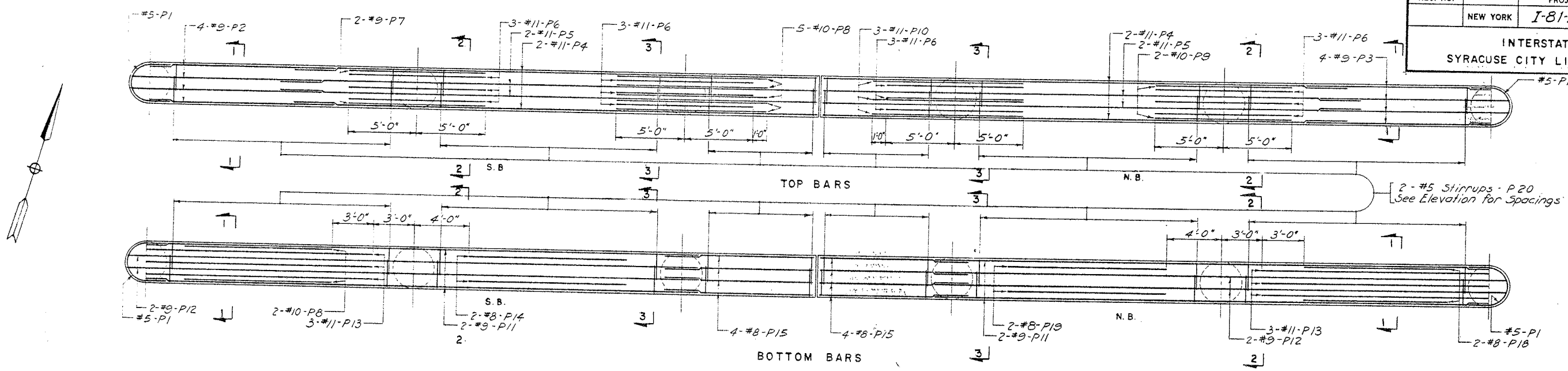

BEAM REINFORCEMENT PIERS #1 & #2

NOTES:
1. ALL BAR REINFORCEMENT SHOWN ON THIS DRAWING SHALL BE PAID FOR UNDER ITEM 28.
2. WORK THIS DRAWING WITH DWGS. NO. M-9 & M-11.
3. FOR BEARING PEDESTAL DETAILS, SECTIONS 1-1 THRU 9-9 AND BAR SCHEDULE SEE DWG. NO. M-11.
4. UNLESS OTHERWISE NOTED ALL REINFORCING BARS AND DIMENSIONS SHALL APPLY TO BOTH PIER #1 AND PIER #2.

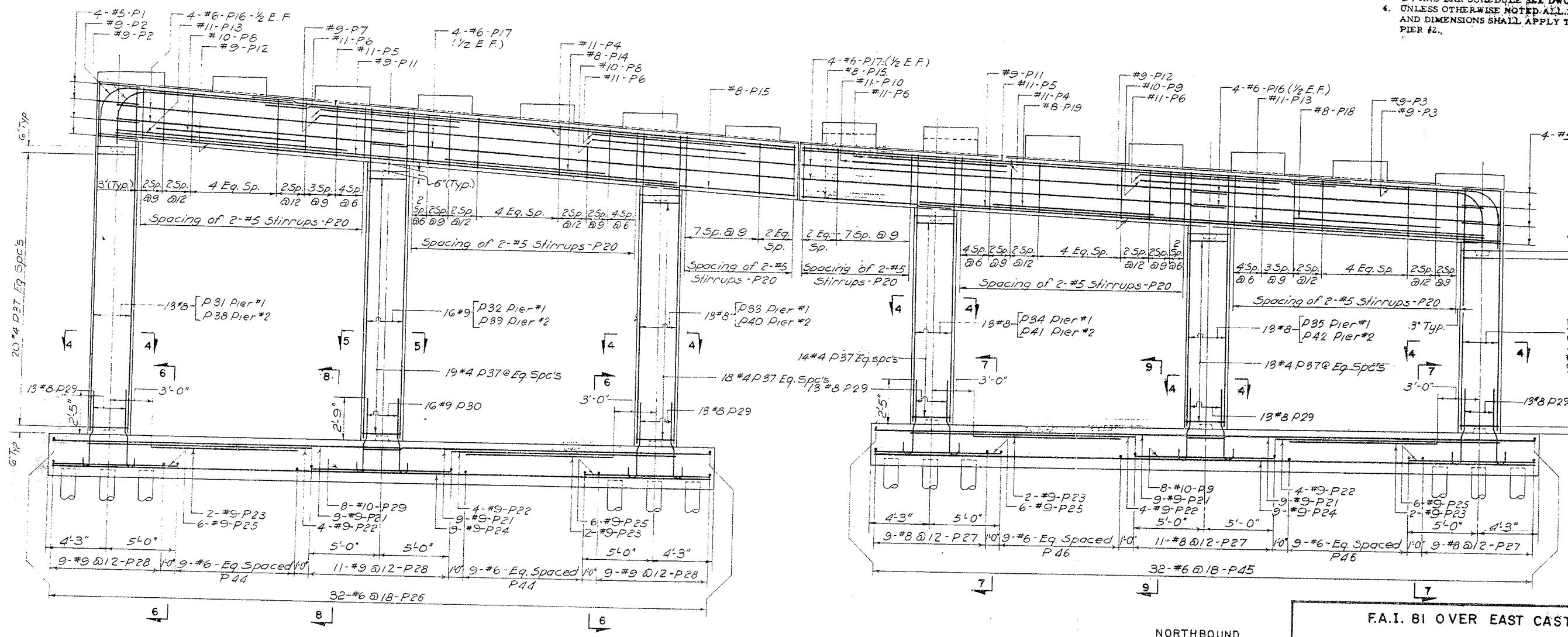

SOUTHBOUND

ELEVATION PIERS #1 & #2

NORTHBOUND

PREPARED AND RECOMMENDED BY LEONARD S. WEGMAN CO.

BY _____

F.A.I. 81 OVER EAST CASTLE STREET

PIER REINFORCEMENT

DRAWN BY:	CHECKED BY:	LEONARD S. WEGMAN CO.	SCALE
HJ			

1031559 F.I.C. 84-7

FED. RD. REG. NO.	STATE	FEDERAL AID PROJECT NO.	SHEET NO.	TOTAL SHEETS
	NEW YORK	I-81-2(80)	282	285

INTERSTATE ROUTE 505
SYRACUSE CITY LINE TO SIZER STREET

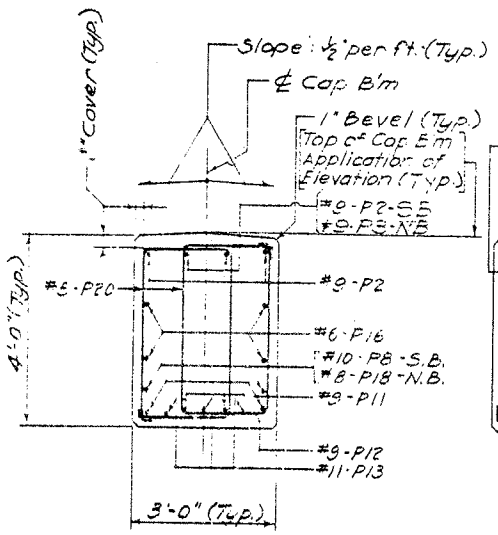

SECTION 1-1

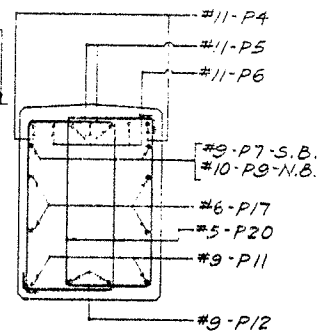

SECTION 2-2

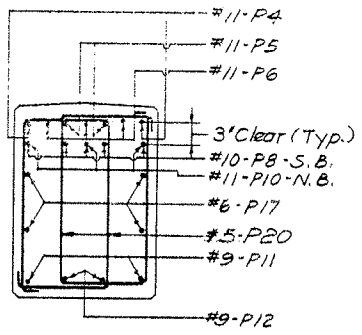

SECTION 3-3

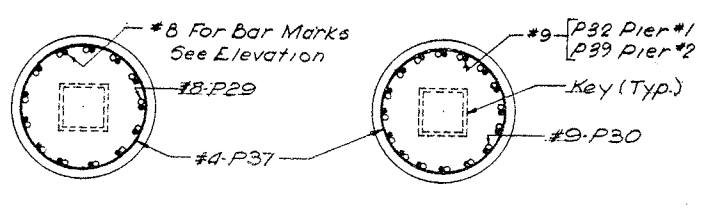

SECTION 4-4

SECTION 5-5

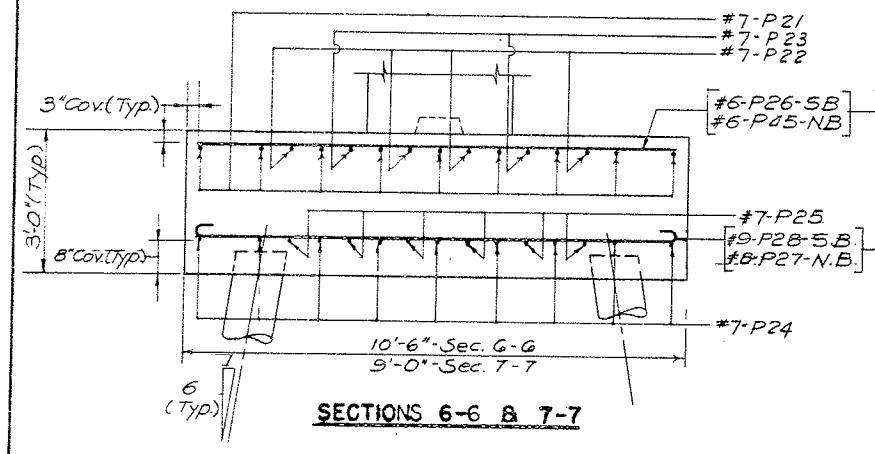

SECTIONS 6-6 & 7-7

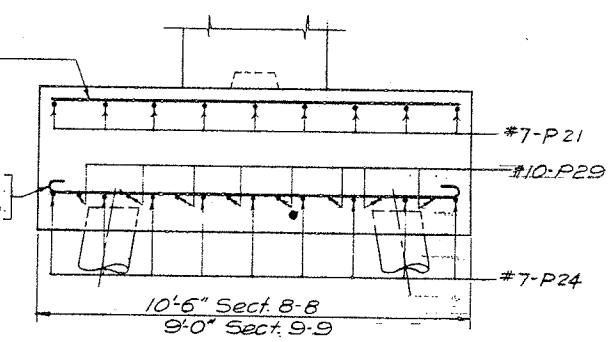

SECTIONS 8-8 & 9-9

BAR SCHEDULE

MARK	SIZE	NO. REQUIRED PIER 1N	PIER 2N	PIER 1S	PIER 2S	LENGTH	TYPE	A	B	C	D	E	G	H	R	LOCATION
P 1	#5	4	4	4	4	7'- 4"	2		1'-7"	4'-2"	11'-7"				1'-6"	3
P 2	#9			4	4	14'-11"	9		2'-5"	3'-0"	9'-6"			0'-9"	1'-23"	1
P 3	#9	4	4			14'-11"	6		2'-5"	3'-0"	9'-6"			0'-8"	1'-11"	1
P 4	#11	2	2	2	2	39'-10"	STR									1
P 5	#11	2	2	2	2	41'- 0"	↓									1
P 6	#11	6	6	6	6	10'- 0"										1
P 7	#9			2	2	10'- 0"										1
P 8	#10			7	7	11'- 0"										3
P 9	#10	10	10	8	8	10'- 0"										3
P10	#11	3	3			11'- 0"										3
P11	#9	2	2	2	2	40'- 4"										1
P12	#9	2	2	2	2	41'- 8"										1
P13	#11	3	3	3	3	16'- 8"										1
P14	#8			2	2	11'- 6"										1
P15	#8	4	4	4	4	10'-10"										1
P16	#6	4	4	4	4	20'- 9"										1
P17	#6	4	4	4	4	81'- 3"										1
P18	#8	2	2			10'- 6"	↓									1
P19	#6	2	2			11'- 0"	STR									1
P20	#5	94	94	94	94	11'- 11"	7	0'-7"	1'-10"	3'-8"	1'-10"	3'-8"	0'-7"			3
P21	#9	18	18	18	18	24'- 9"	STR									1
P22	#9	8	8	8	8	36'- 0"	↓									1
P23	#9	4	4	4	4	10'- 8"										1
P24	#9	9	9	9	9	37'- 4"										1
P25	#9	12	12	12	12	9'- 0"										1
P26	#6			32	32	10'- 0"	STR									1
P27	#8	29	29			10'- 8"	1		1'-1"	8'-6"			1'-1"			1
P28	#9			29	29	12'- 6"	1		1'-3"	10'-0"			1'-3"			1
P29	#8	39	39	26	26	5'-10"	1		1'-1"	4'-9"						1
P30	#9			16	16	6'- 4"	1		1'-3"	5'-1"						1
P31	#8			13		24'- 8"	STR									2
P32	#9			16		23'- 6"	↓									1
P33	#8			13		22'- 4"										1
P34	#8	13				18'- 4"										1
P35	#8	13				17'- 3"	↓									1
P36	#8	13				16'- 6"	STR									1
P37	#4	39	39	57	57	9'- 9"	8	0'-6"	8'-9"					0'-6"	1'-6"	1
P38	#8				13	24'- 3"	STR									2
P39	#9				16	33'- 1"	↓									1
P40	#8				13	21'-11"										1
P41	#8		13			17'-11"										1
P42	#8		13			16'-10"	↓									1
P43	#8		13			16'-1"	STR									1
P44	#6			18	18	11'-4"	1	0'-8"	10'-0"					0'-8"		1
P45	#6	32	32			8'-6"	STR									1
P46	#6	18	18			9'-10"	1	0'-8"	8'-6"					0'-8"		1
BP1	#6	3	3	3	3	8'-10"	5		2'-4"	4'-2"	2'-4"				1'-4"	4
BP2	#6	39	39	39	39	7'-10"	2		2'-8"	2'-8"	2'-8"					4
BP3	#5	73	73	73	73	6'- 0"	1	0'-7"	3'-5"							4
BP4	#6	1	1	1	1	6'- 6"	12		2'-3"	0'-10"	1'-6"			2'-1"	(K=10)	4
BP5	#6	1	1	1	1	6'-11"	7		2'-0"	0'-10"	3'-6"	0'-10"				4
CP1	#6	114	114	114	114	7'- 3"	STR									

ABBREVIATIONS

PIER 1N - PIER #1 NORTHBOUND
PIER 2N - PIER #2 NORTHBOUND
PIER 1S - PIER #1 SOUTHBOUND
PIER 2S - PIER #2 SOUTHBOUND
STR - STRAIGHT

LOCATION

1 - FOOTING
2 - COLUMN
3 - CAP BEAM
4 - BEARING PEDESTAL

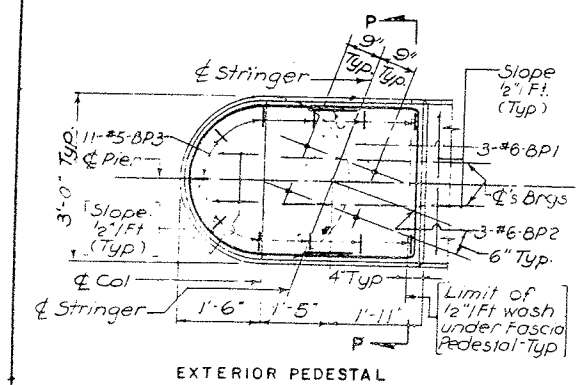

EXTERIOR PEDESTAL

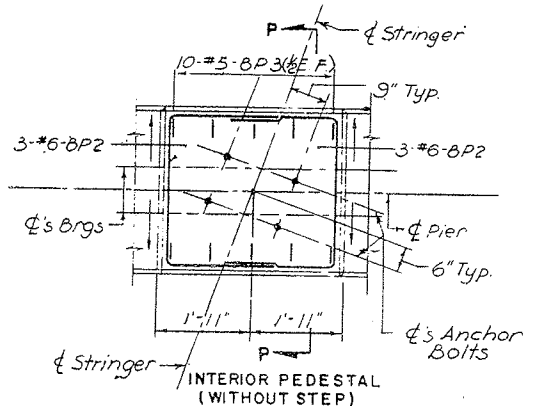

INTERIOR PEDESTAL (WITHOUT STEP)

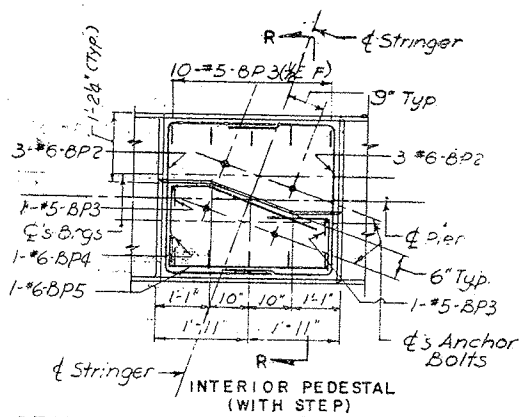

INTERIOR PEDESTAL (WITH STEP)

BEARING PEDESTAL DETAILS

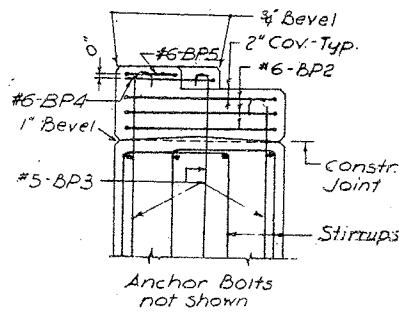

SECTION R-R

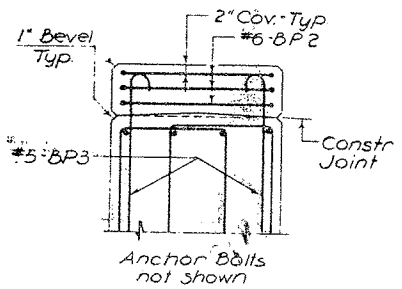

SECTION P-P

NOTES:
1. ALL BAR REINFORCING SHOWN ON THIS DRAWING SHALL BE PAID FOR UNDER ITEM 28.
2. WORK THIS DRAWING WITH DWGS. NO. M-9 AND M-10.
3. FOR REINFORCEMENT BENDING DETAILS SEE DWG. NO. M-12.

PREPARED AND RECOMMENDED BY
LEONARD S. WEGMAN CO.
BY _____
N.Y.S. P.E. LIC. 23287 DATE 12-9-63

F.A.I. 81 OVER EAST CASTLE STREET

PIER DETAILS AND PIER BAR SCHEDULE

DRAWN BY:	CHECKED BY:	LEONARD S. WEGMAN CO. ENGINEERS	SCALE NO SCALE
HL	JC	235 EAST 45TH STREET, NEW YORK 17, N.Y.	DWG. NO. M-11
REVIEWED BY:	DATE		
	12-9-63		

OSTLYE PRESS INC. BROOKLYN 17, N.Y. REPROVEL NO. 4008

1031559 F.I.C. 647

FED. RD. REG. NO.	STATE	FEDERAL AID PROJECT NO.	SHEET NO.	TOTAL SHEETS
	NEW YORK	I-81-2(80)	284	285

INTERSTATE ROUTE 505
SYRACUSE CITY LINE TO SIZER STREET

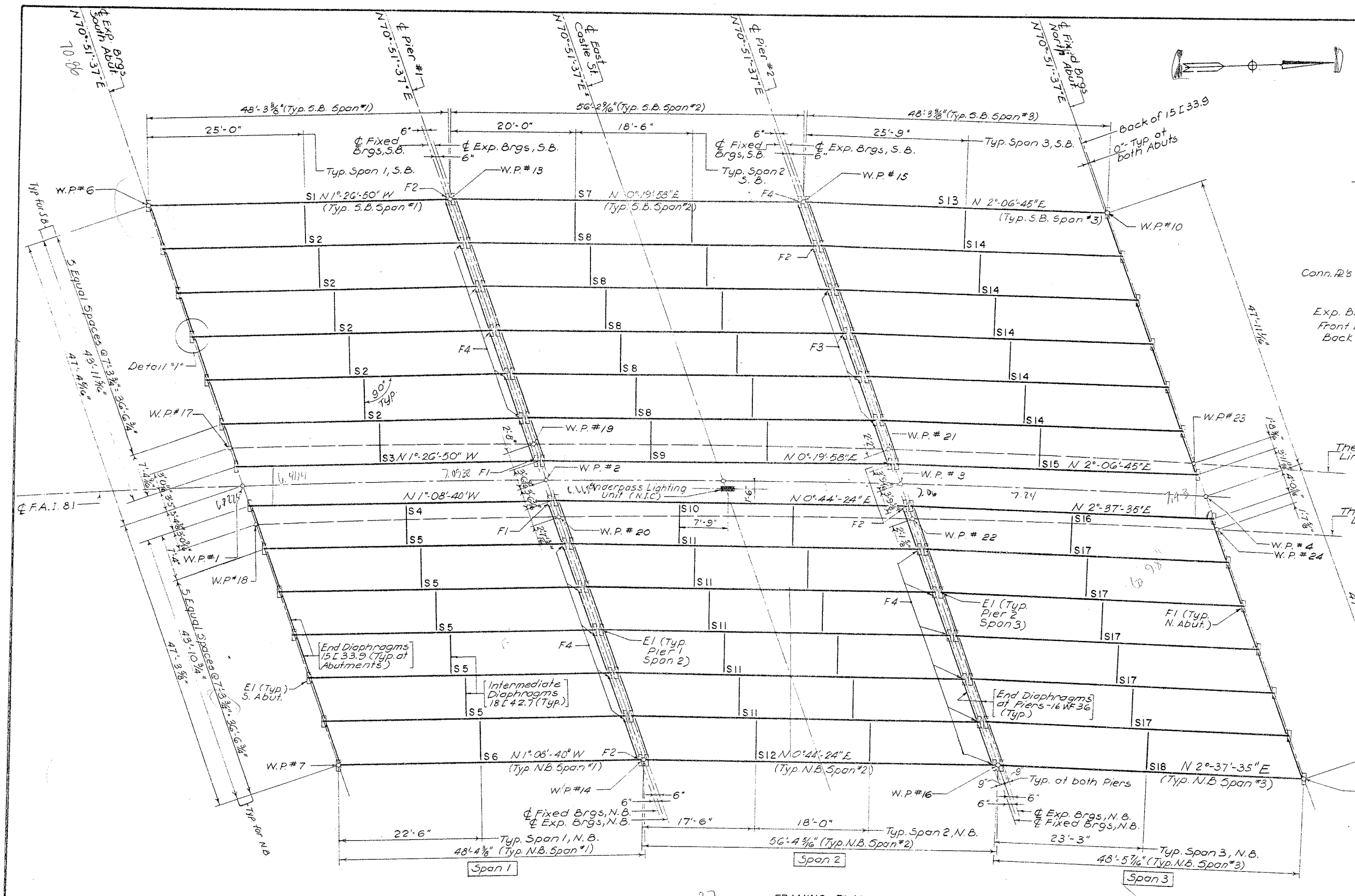

FRAMING PLAN
SCALE: 1/8" = 1'-0"

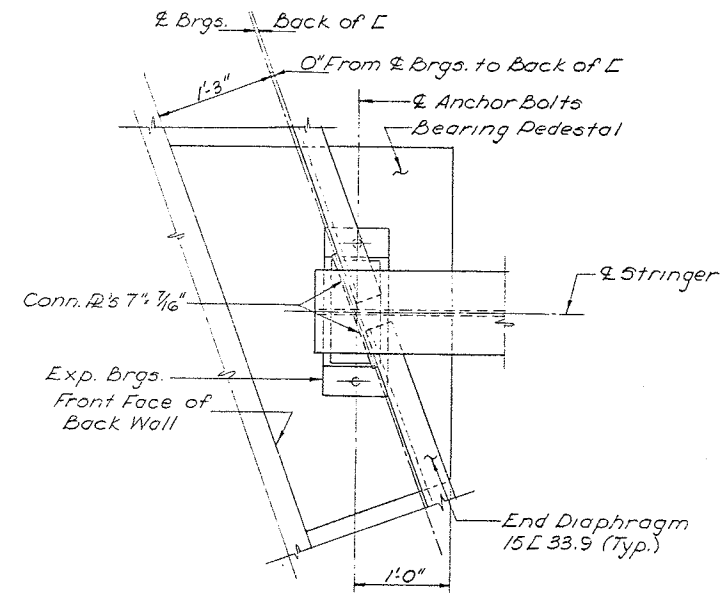

DETAIL "1"
SCALE: 1" = 1'-0"

Typical Partial Plan For Stringers and End Diaphragms of Abutmen

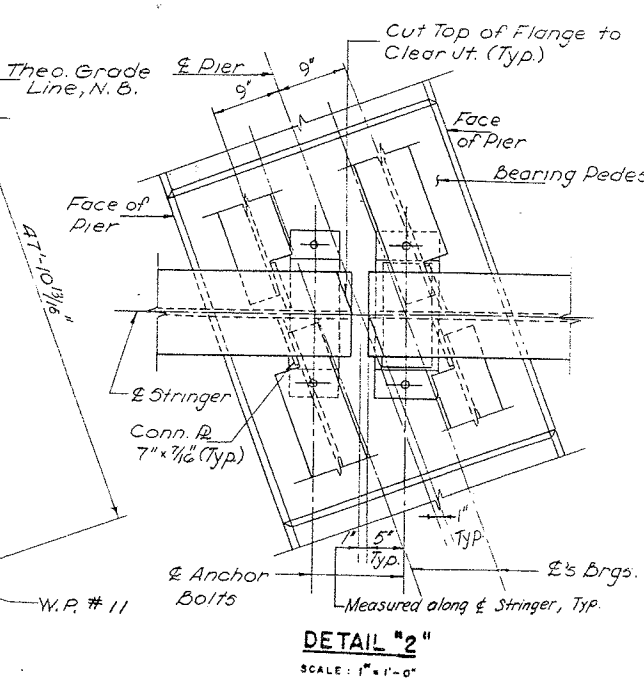

DETAIL "2"
SCALE: 1" = 1'-0"

Typical Partial Plan for Stringers and End Diaphragms at Piers

NOTES:
1. FOR SUPERSTRUCTURE NOTES SEE DWG. NO. M-14.
2. ALL DIMENSION SHOWN ON FRAMING PLAN ARE HORIZONTAL DIMENSIONS.
3. ALL STEEL SHOWN ON THIS DRAWING SHALL BE PAID FOR UNDER ITEM 29.
4. F-1, F-2 . . . ,AND E-1 ARE BEARING MARKS. SEE DWG. NO. M-15 FOR BEARING DETAILS.
5. S1, S2, S3. . . ARE STRINGER MARKS. SEE DWG. NO. M-14 FOR STRINGER DETAILS.

PREPARED AND RECOMMENDED BY
LEONARD S. WEGMAN CO.
BY _____

Framingham

F.A.I. 81 OVER EAST CASTLE STREET

FRAMING PLAN

DRAWN BY: H.L.R.S	CHECKED BY: F.G. E.F.	LEONARD S. WEGMAN CO. ENGINEERS	SCALE AS NOTED
REVIEWED BY:	DATE		

BOTH SIDES

SPANS 1-3(SB) 10" DECK 8" CURB

SPANS 4-6(NB) 8" DECK 10" CURB

FED. RD. REG. NO.	STATE	FEDERAL AID PROJECT NO.	SHEET NO.
	NEW YORK	I-81-2(80)	285

INTERSTATE ROUTE 505
SYRACUSE CITY LINE TO SIZER STR

NOTES:
1. UNLESS OTHERWISE NOTED ALL STEEL SHOWN ON THIS DRAWING SHALL BE PAID FOR UNDER ITEM 29.
2. ALL BAR REINFORCEMENT SHOWN ON THIS DRAWING SHALL BE PAID FOR UNDER ITEM 28.

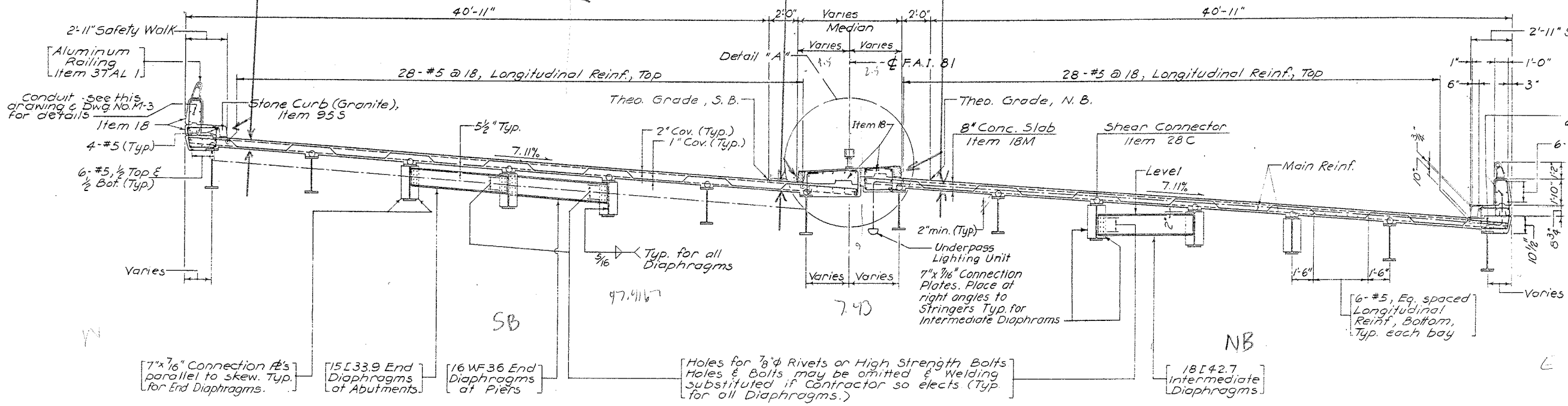

BRIDGE CROSS SECTION

SCALE ¼" = 1'-0"

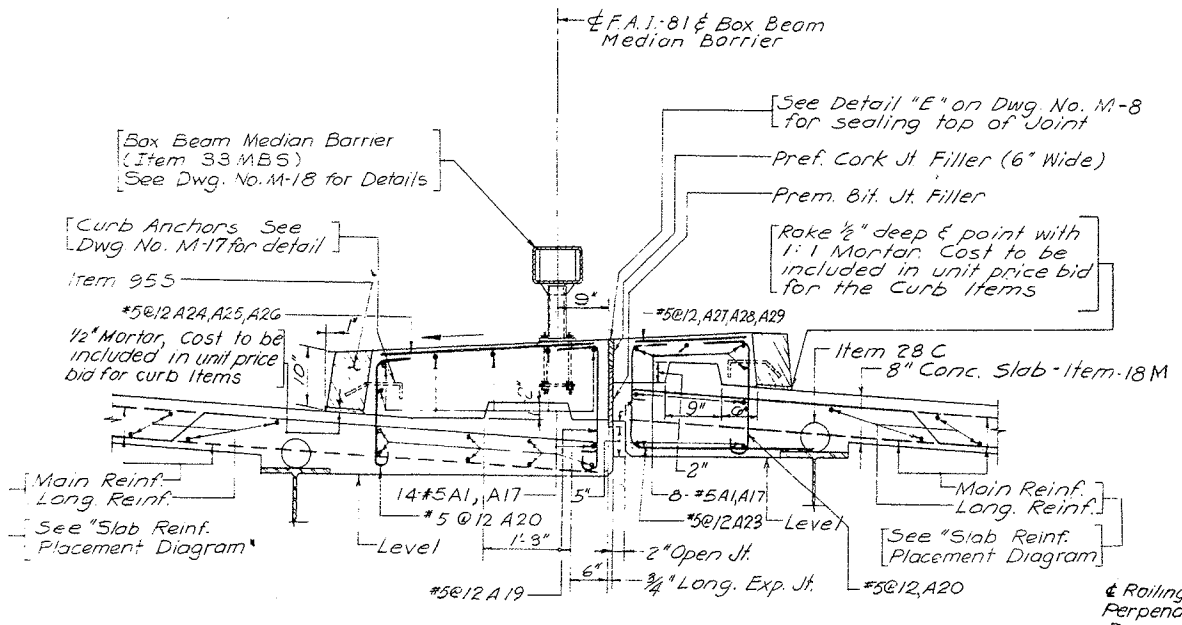

DETAIL "A"

SCALE: ¾" = 1'-0"

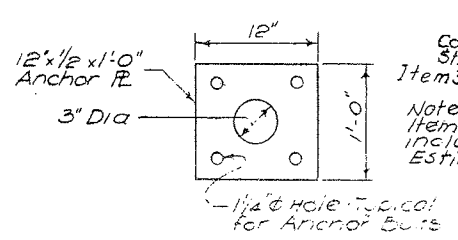

DETAIL OF ANCHOR PLATE

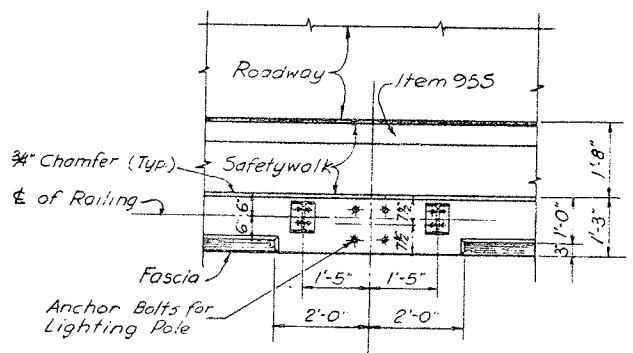

PLAN

SCALE: ½" = 1'-0"

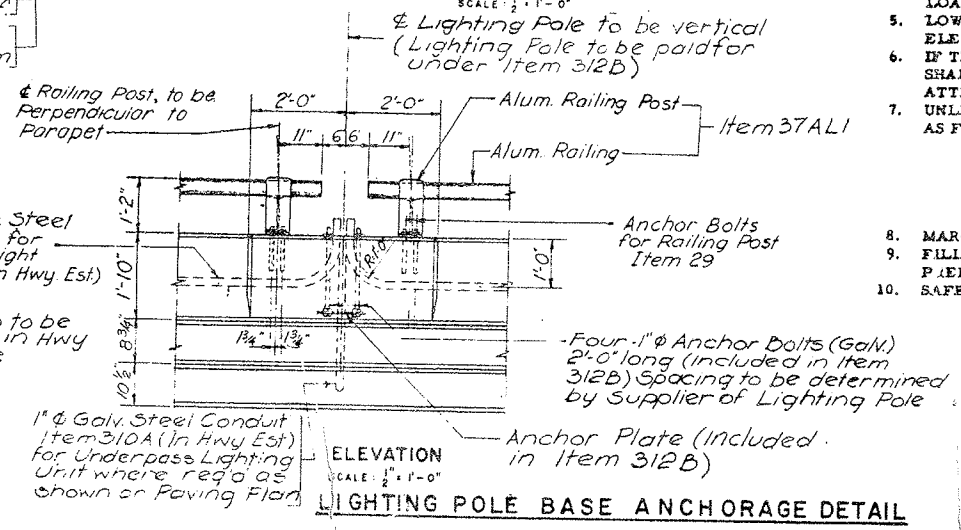

ELEVATION

SCALE: ½" = 1'-0"

LIGHTING POLE BASE ANCHORAGE DETAIL

℄ Galv. Steel Conduit for Street Light Item 310B (In Hwy Est)

Note: Item 312B to be included in Hwy Estimate

CONSTRUCTION PROCEDURE

1. POUR SLAB.
2. SET STONE CURBS (GRANITE) & POUR SAFETY WALKS TO PROPER LINE AND GRADE.
   SAFETY WALK NOT TO BE SCORED.
3. SET RAILING ANCHOR BOLTS BY MEANS OF TEMPLATE AND POUR PARAPET. ERECT RAILING.
4. ANCHOR BOLTS SHALL BE CUT OFF 1/8" ABOVE NUT AND PEENED.
   THE CUT TOPS SHALL BE PAINTED AS REQUIRED BY THE SPECIFICATIONS FOR M 18A, EXCEPT THAT THE FINAL TWO (2) COATS SHALL BE ALUMINUM PAINT COMPLYING WITH THE SPECIFICATIONS FOR M 18J.

SUPERSTRUCTURE NOTES

1. ALL BEARINGS ARE TO BE FIELD WELDED TO BEAMS.
2. UNLESS OTHERWISE NOTED, ALL STRUCTURAL STEEL SHALL CONFORM TO THE REQUIREMENTS OF A. S. T. M. DESIGNATIO A36-62T.
3. HIGH STRENGTH BOLTS, NUTS AND WASHERS SHALL CONFORM TO THE REQUIREMENTS OF A. S. T. M. DESIGNATION A-325. ALL STRUCTURAL STEEL, REGARDLESS OF TYPE, WILL BE PAID FOR UNDER ITEM 29.
3. MINIMUM PREHEAT AND INTERPASS TEMPERATURES SHALL BE MAINTAINED FOR WELDING IN ACCORDANCE WITH THE FOI ING TABLES:

THICKNESS OF THICKEST PART AT POINT OF WELDING	MINIMUM PREHEAT AND INTERPASS TEMPERATURES
TO 1" INCL.	NONE*
OVER 1" TO 2" INCL.	50°F*
OVER 2"	150°F

*WHEN BASE METAL TEMPERATURES ARE BELOW 32°F PREHEAT BASE METAL TO AT LEAST 70°F AND MAINTAIN DURING WELDING.

4. TO INSURE UNIFORM GRADES FOR THE SURFACE OF ROADWAY UNDER DEAD LOAD, AFTER ALL SUPERSTRUCTURE STEEL I BEEN ERECTED AND BRACED IN ITS FINAL POSITION, ELEVATION SHALL BE TAKEN ON THE TOP OF THE STEEL AT THE CI LINE OF WEB AT EACH CENTER LINE OF BEARING. CENTER OF THE SPAN AND AT OTHER LOCATIONS WHERE THEORETIC/ BOTTOM OF THE SLAB ELEVATIONS ARE INDICATED ON THE PLANS.
   THE DEPTH OF HAUNCH REQUIRED TO POSITION THE SLAB FORMS WILL BE EQUAL TO THE DIFFERENCE IN ELEVATION BE THE BOTTOM OF SLAB ELEVATIONS AND THE TOP OF STEEL ELEVATIONS PLUS THE DEFLECTION DUE TO SUPERIMPOSED LOAD.
5. LOW HYDROGEN TYPE ELECTRODES, CONFORMING TO A. W. S. -A. S. T. M. SPECIFICATION FOR MILD STEEL ARC-WELDING, ELECTRODES, CLASSIFICATION E 7015, E 7016 & E 7018.
6. IF THE CONTRACTOR ELECTS TO USE CORRUGATED METAL FORMS FOR THE STRUCTURAL SLAB, THE DETAILS OF THESE I SHALL BE SUBMITTED TO THE DEPUTY CHIEF ENGINEER (BRIDGES) FOR APPROVAL, PRIOR TO THEIR USE. THE CONTRAC ATTENTION IS DIRECTED TO ADDITIONAL NOTES APPEARING IN THE PROPOSAL RELATIVE TO CORRUGATED METAL FORMS
7. UNLESS OTHERWISE SHOWN, THE MINIMUM CONCRETE COVER FOR REINFORCING STEEL IN THE SUPERSTRUCTURE SHALL I AS FOLLOWS:

BRIDGE SLAB - TOP OF SLAB	2"
BRIDGE SLAB - BOTTOM OF SLAB	1"
BRIDGE SLAB - EXTERIOR FACE	2-1/2"
EXTERIOR FACE OF PARAPET	2-3/4"
INTERIOR FACE OF PARAPET	2"

8. MAROON PRIMER, ITEM M18B, WILL NOT BE APPROVED FOR USE ON THIS CONTRACT.
9. FILLET WELDING ACROSS FLANGES WHICH CARRY TENSILE STRESSES SHALL ONLY BE PERFORMED WITH THE MINIMUM PREHEAT OF 200°F.
10. SAFETY WALKS SHALL NOT BE SCORED.

F.A.I. 81 OVER EAST CASTLE STREET

BRIDGE CROSS SECTION AND SUPERSTRUCTURE DET

PREPARED AND RECOMMENDED BY LEONARD S. WEGMAN CO.
BY [signature]
N.Y.S. P.E. LIC. 23287 DATE 12-9-63

DRAWN BY: H.L. CHECKED BY: M.M.A. M.P.
REVIEWED BY: [signature] DATE 12-9-63

LEONARD S. WEGMAN CO. ENGINEERS
235 EAST 45TH STREET, NEW YORK 17, N.Y.

SCALE AS NOTE
DWG. NO. A

TABLE - ITEM 11555.8198 M	
ELEMENT	QUANTITY (M)
BACKWALL	5.14
PEDESTAL	5.13

TABLE - ITEM 582.05 M	
ELEMENT	QUANTITY (m³)
BACKWALL	0.24
PEDESTAL	1.10

TABLE - ITEM 585.02 M (LIFTING FROM ABUTMENT SEAT)				
LOCATION	QTY (EA)	DL (KN)	LL (KN)	TOTAL (KN)
PED. 1 - 14	14	128	258	386

FED ROAD REG. NO.	STATE	CONTRACT NO.	SHEET NO.	TOTAL SHEETS
1	N.Y.		490	529

INTERSTATE ROUTE 505, SYRACUSE CITY LINE TO SIZER STREET
BRIDGE REHABILITATION PROJECT (ELEMENT SPECIFIC)
VARIOUS BRIDGES ON INTERSTATES 81 & 690
CITY OF SYRACUSE
ONONDAGA COUNTY
P.I.N. 3804.39 B.I.N. 1031559

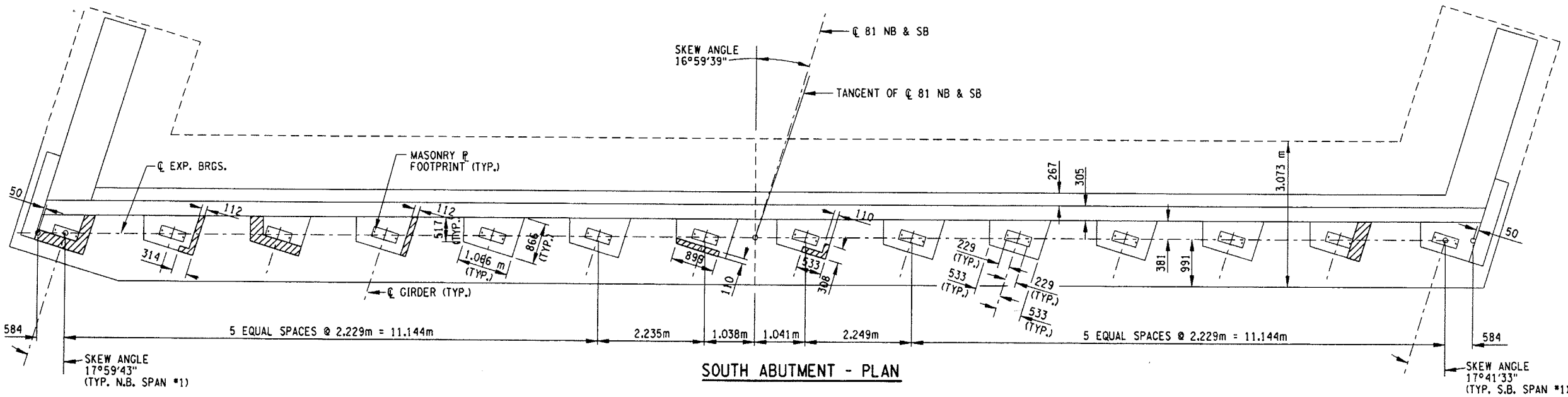

SOUTH ABUTMENT - PLAN

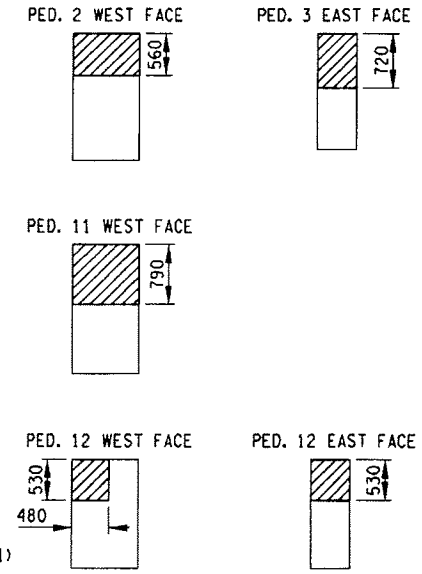

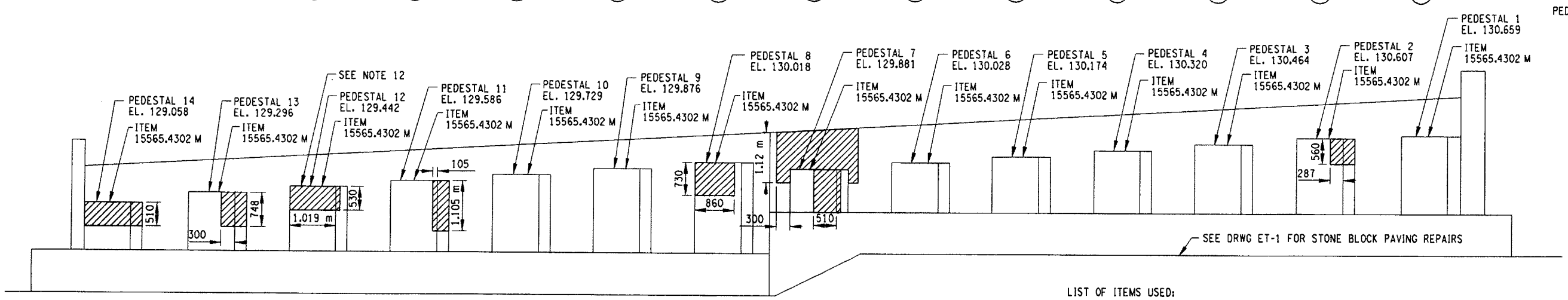

SOUTH ABUTMENT - ELEVATION

PEDESTAL ELEVATIONS

NOTES:

1. ALL AREAS SHOWN FOR CONCRETE REMOVAL ARE APPROXIMATE AND SHALL BE FIELD VERIFIED BY THE CONTRACTOR AND EIC.
2. CONCRETE REMOVAL TO LIMITS SHOWN INCLUDES SOUND CONCRETE AROUND THE PERIMETER OF THE DETERIORATED CONCRETE, A.O.B.E.
3. WHEN REMOVING EXISTING CONCRETE, SAWCUT 5 mm MIN. TO PRODUCE NEAT REMOVAL LINES. ANY COST TO BE INCLUDED IN THE BID PRICE FOR ITEM 582.05 M.
4. ELEVATIONS ARE GIVEN FOR REFERENCE ONLY.
5. REFER TO CONTRACT F.I.C. 64-7 FOR ORIGINAL CONSTRUCTION DETAILS.
6. FOR CONCRETE REPAIR DETAILS SEE DWG. BR-1.
7. RESTORE TO ORIGINAL DIMENSIONS.
8. PEDESTALS NUMBERED FROM WEST TO EAST.
9. STRUCTURAL LIFTING OPERATIONS FOR BEARING RESTORATION (ITEM 585.02 M), TYPE B (LIFTING FROM ABUTMENT SEAT) SEE DWG NO. TSL-1.
10. PERFORM EXPANSION BEARING RESTORATION TO BEARINGS NO. 1-14, (ITEM 15565.4302 M). SEE DWG NO. BR-6.
11. CRACKS IN BACKWALL AND PEDESTALS WILL BE REPAIRED AS ORDERED BY EIC BY INJECTION GROUTING METHOD UNDER ITEM 11555.8198 M.
12. SEE DWG. NO. BR-2 FOR DETAILS FOR PLACEMENT OF GALVANIZED ANODES IN PEDESTAL REPAIR AREAS.

0 1 2 3 4 5 m

LIST OF ITEMS USED:

ITEM 11555.8198 M - CRACK REPAIR (3 mm OR WIDER) BY INJECTION OF PORTLAND CEMENT GROUT (m) AS ORDERED BY EIC

ITEM 18559.1696 M - PROTECTIVE SEALING OF STRUCTURAL CONCRETE, (SM)

ITEM 15565.4302 M - BRIDGE BEARING RESTORATION (EA)

ITEM 582.05 M - REMOVAL OF STRUCTURAL CONCRETE REPLACEMENT WITH CLASS A CONCRETE (CM)

ITEM 585.02 M - STRUCTURAL LIFTING OPERATIONS - TYPE B (EA) (LIFTING FROM ABUTMENT SEAT)

LEGEND:

AREA OF PROPOSED WORK; ITEM 582.05 M REMOVAL OF STRUCTURAL CONCRETE- AT LEAST 40 mm BEHIND REINFORCEMENT REPLACE WITH CLASS A CONCRETE.

C&S Engineers, Inc. SYRACUSE • BUFFALO • BINGHAMTON

B.I.N. 1031559

SPECIAL NOTE: ALL DIMENSIONS ARE SHOWN IN MILLIMETERS UNLESS OTHERWISE NOTED.

AS BUILT REVISIONS

SIGNATURE DATE

INTERSTATE 81
OVER
EAST CASTLE STREET

SOUTH ABUTMENT PLAN AND ELEVATION

STATE OF NEW YORK
DEPARTMENT OF TRANSPORTATION

FILENAME	REGION	DATE	DRAWING NO.
380439TB.A1A	3	OCTOBER 2003	ST20-2

DESIGN SUPERVISOR PWW JOB MANAGER TAS DESIGNED BY JRF CHECKED BY JRF DRAFTED BY JJL ESTIMATED BY JRF

USER = ••USER••

TABLE - ITEM 11555.8198 M	
ELEMENT	QUANTITY (M)
BACKWALL	6.54
PEDESTAL	0.0

TABLE - ITEM 582.05 M	
ELEMENT	QUANTITY (CM)
BACKWALL	0.28
PEDESTAL	0.73

TABLE - ITEM 585.02 M (LIFTING FROM ABUTMENT SEAT)				
LOCATION	QTY (EA)	DL (KN)	LL+I (KN)	TOTAL (KN)
PED. 1, 11, 12 & 14	4	128	258	386

FED ROAD REG. NO.	STATE	CONTRACT NO.	SHEET NO.	TOTAL SHEETS
1	N.Y.	D259477	491	529

INTERSTATE ROUTE 505, SYRACUSE CITY LINE TO SIZER STREET
BRIDGE REHABILITATION PROJECT (ELEMENT SPECIFIC)
VARIOUS BRIDGES ON INTERSTATES 81 & 690
CITY OF SYRACUSE
ONONDAGA COUNTY
P.I.N. 3804.39 | B.I.N. 1031559

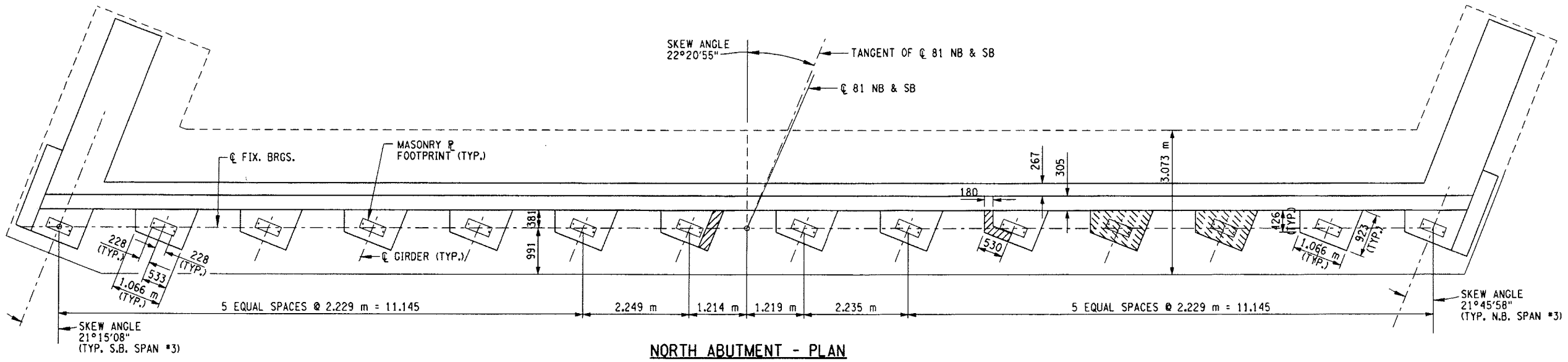

NORTH ABUTMENT - PLAN

G1 G2 G3 G4 G5 G6 G7 G8 G9 G10 G11 G12 G13 G14

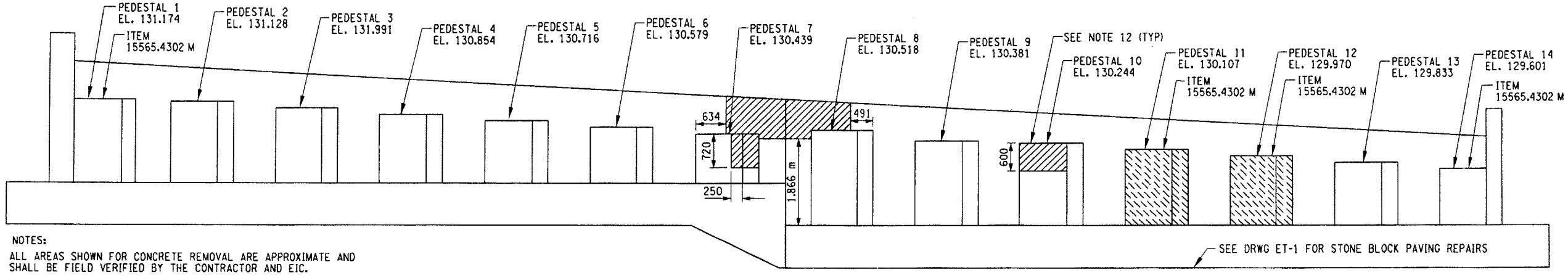

NORTH ABUTMENT - ELEVATION

PED. 7 WEST FACE

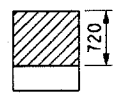

PED. 10 EAST FACE

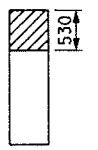

PEDESTAL ELEVATIONS

NOTES:

1. ALL AREAS SHOWN FOR CONCRETE REMOVAL ARE APPROXIMATE AND SHALL BE FIELD VERIFIED BY THE CONTRACTOR AND EIC.
2. CONCRETE REMOVAL TO LIMITS SHOWN INCLUDES SOUND CONCRETE AROUND THE PERIMETER OF THE DETERIORATED CONCRETE, A.O.B.E.
3. WHEN REMOVING EXISTING CONCRETE, SAWCUT 5 mm MIN. TO PRODUCE NEAT REMOVAL LINES. ANY COST TO BE INCLUDED IN THE BID PRICE FOR ITEM 582.05 M.
4. ELEVATIONS ARE GIVEN FOR REFERENCE ONLY.
5. REFER TO CONTRACT F.I.C. 64-7 FOR ORIGINAL CONSTRUCTION DETAILS.
6. FOR CONCRETE REPAIR DETAILS SEE DWG. BR-1.
7. RESTORE TO ORIGINAL DIMENSIONS.
8. PEDESTALS NUMBERED FROM WEST TO EAST.
9. STRUCTURAL LIFTING OPERATIONS FOR BEARING RESTORATION (ITEM 585.02 M). TYPE B (LIFTING FROM ABUTMENT SEAT) SEE DWG NO. TSL-1.
10. PERFORM FIXED BEARING RESTORATION TO BEARINGS NO. 1,11,12,14 (ITEM 15565.4302 M). SEE DWG NO. BR-6.
11. CRACKS IN BACKWALL AND PEDESTALS WILL BE REPAIRED AS ORDERED BY EIC BY INJECTION GROUTING METHOD UNDER ITEM 11555.8198 M.
12. SEE DWG. NO. BR-2 FOR DETAILS FOR PLACEMENT OF GALVANIZED ANODES IN PEDESTAL REPAIR AREAS.

LIST OF ITEMS USED:

ITEM 11555.8198 M - CRACK REPAIR (3 mm OR WIDER) BY INJECTION OF PORTLAND CEMENT GROUT (m) AS ORDERED BY EIC

ITEM 18559.1696 M - PROTECTIVE SEALING OF STRUCTURAL CONCRETE, (SM)

ITEM 15565.4302 M - BRIDGE BEARING RESTORATION (EA)

ITEM 16570.32 M - LOCALIZED PAINTING OF BARE STRUCTURAL STEEL (SM).

ITEM 16570.76 M - LOCAL VACUUM CONTAINED CLEANING STRUCTURAL STEEL - IRREGULAR SURFACES (SM)

ITEM 582.05 M - REMOVAL OF STRUCTURAL CONCRETE REPLACEMENT WITH CLASS A CONCRETE (CM)

ITEM 585.02 M - STRUCTURAL LIFTING OPERATIONS - TYPE B (EA) (LIFTING FROM ABUTMENT SEAT)

ITEM 555.09 M - CONCRETE FOR STRUCTURES, CLASS HP (CM)

ITEM 580.01 M - REMOVAL OF STRUCTURAL CONCRETE (CM)

LEGEND:

AREA OF PROPOSED WORK; ITEM 582.05 M REMOVAL OF STRUCTURAL CONCRETE- AT LEAST 40 mm BEHIND REINFORCEMENT REPLACE WITH CLASS A CONCRETE.

ITEM 580.01 M - REMOVAL OF STRUCTURAL CONCRETE, (CM) AND ITEM 555.09 M - CONCRETE FOR STRUCTURES, CLASS HP (CM).

1 0 1 2 3 4 5 m

C&S Engineers, Inc. SYRACUSE • BUFFALO • BINGHAMTON

B.I.N. 1031559

SPECIAL NOTE: ALL DIMENSIONS ARE SHOWN IN MILLIMETERS UNLESS OTHERWISE NOTED

AS BUILT REVISIONS

SIGNATURE DATE

INTERSTATE 81
OVER
EAST CASTLE STREET
NORTH ABUTMENT
PLAN AND ELEVATION

STATE OF NEW YORK
DEPARTMENT OF TRANSPORTATION

FILENAME	REGION	DATE	DRAWING NO.
380439TB.A2A	3	OCTOBER 2003	ST20-3

DESIGN SUPERVISOR PWW JOB MANAGER TAS DESIGNED BY JO CHECKED BY
ESTIMATED BY JRF DRAFTED BY JO/PTT CHECKED BY JRF
FILE NAME = **SYTIME**
DATE/TIME = **DATE** **TIME**
USER = **USER**

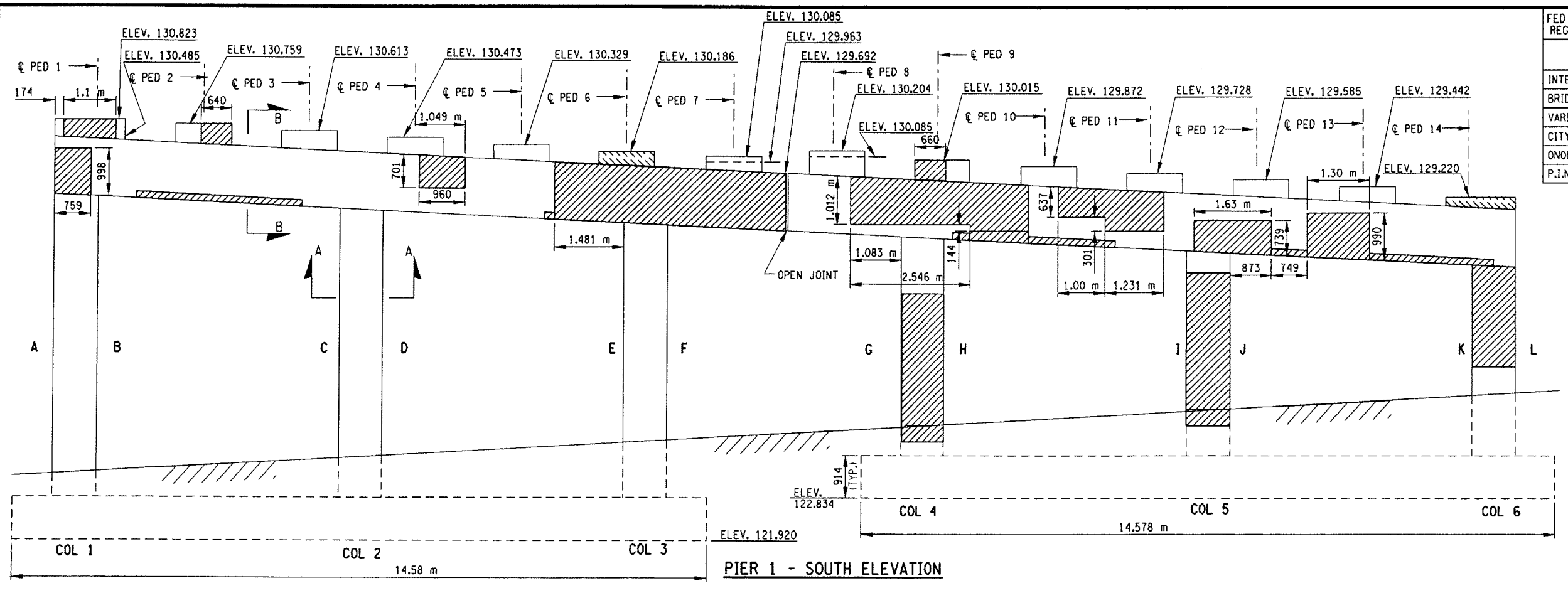

PIER 1 - SOUTH ELEVATION

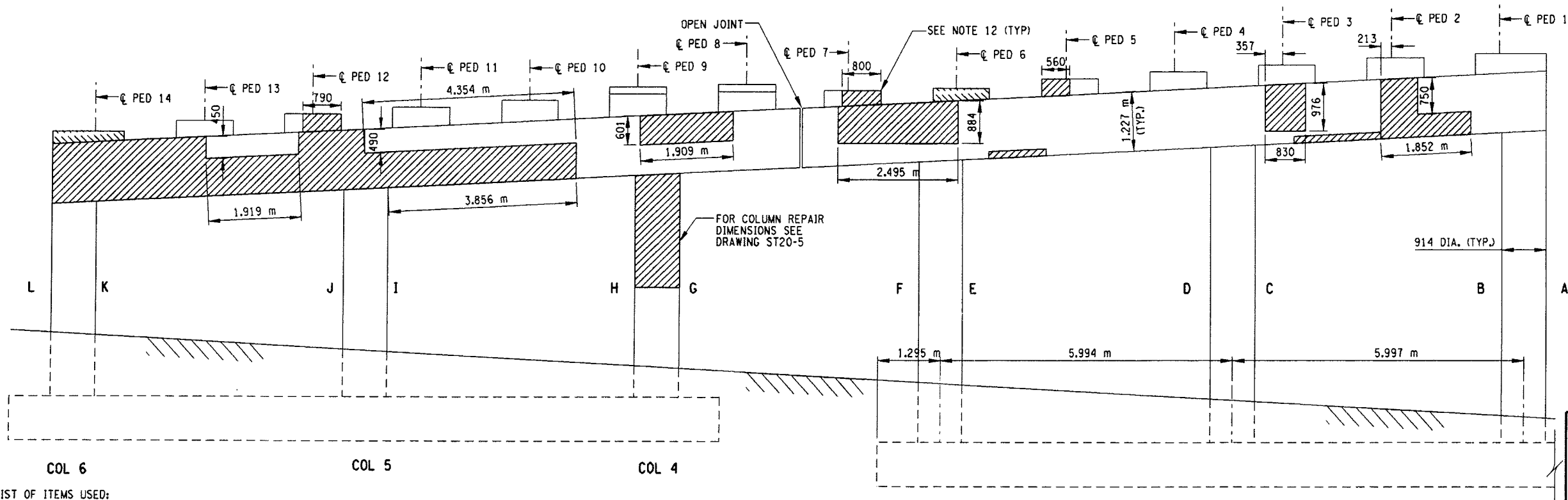

PIER 1 - NORTH ELEVATION

LIST OF ITEMS USED:

ITEM 555.09 M - CONCRETE FOR STRUCTURES, CLASS HP (CM)

ITEM 580.01 M - REMOVAL OF STRUCTURAL CONCRETE (CM)

ITEM 18559.1696 M - PROTECTIVE SEALING OF STRUCTURAL CONCRETE, (SM)

ITEM 16570.32 M - LOCALIZED PAINTING OF BARE STRUCTURAL STEEL (SM)

ITEM 16570.76 M - LOCAL VACUUM CONTAINED CLEANING STRUCTURAL STEEL - IRREGULAR SURFACES (SM)

ITEM 15565.4302 M - BRIDGE BEARING RESTORATION (EA)

ITEM 582.05 M - REMOVAL OF STRUCTURAL CONCRETE. REPLACEMENT WITH CLASS A CONCRETE (CM)

ITEM 585.03 M - STRUCTURAL LIFTING OPERATIONS - TYPE C (EA) (LIFTING FROM FOOTING)

CONCRETE TABLE (m³)		
PEDESTAL	QUANTITY	ITEM NO.
6	0.32	555.09 M
14	0.26	555.09 M

TABLE - ITEM 582.05 M	
ELEMENT	QUANTITY (m³)
PIER	9.77
PEDESTAL	0.24

1 0 1 2 3 4 5 m

C&S Engineers, Inc. SYRACUSE • BUFFALO • BINGHAMTON

FED ROAD REG. NO.	STATE	CONTRACT NO.	SHEET NO.	TOTAL SHEETS
1	N.Y.	D259477	492	529

INTERSTATE ROUTE 505, SYRACUSE CITY LINE TO SIZER STREET

BRIDGE REHABILITATION PROJECT (ELEMENT SPECIFIC)

VARIOUS BRIDGES ON INTERSTATES 81 & 690

CITY OF SYRACUSE

ONONDAGA COUNTY

P.I.N. 3804.39 B.I.N. 1031559

NOTES:

1. ALL AREAS SHOWN FOR CONCRETE REMOVAL ARE APPROXIMATE AND SHALL BE FIELD VERIFIED BY THE CONTRACTOR AND E/C.
2. CONCRETE REMOVAL TO LIMITS SHOWN INCLUDES SOUND CONCRETE AROUND THE PERIMETER OF THE DETERIORATED CONCRETE, A.O.B.E.
3. WHEN REMOVING EXISTING CONCRETE, SAWCUT 5 mm MIN. TO PRODUCE NEAT REMOVAL LINES. ANY COST TO BE INCLUDED IN THE BID PRICE FOR ITEM 582.05 M.
4. ELEVATIONS ARE GIVEN FOR REFERENCE ONLY.
5. REFER TO CONTRACT F.I.C. 64-7 FOR ORIGINAL CONSTRUCTION DETAILS.
6. FOR CONCRETE REPAIR DETAILS SEE DWG. BR-1.
7. RESTORE TO ORIGINAL DIMENSIONS.
8. PEDESTALS NUMBERED FROM WEST TO EAST.
9. STRUCTURAL LIFTING OPERATIONS FOR BEARING RESTORATION AND CONCRETE REPAIRS (ITEM 585.03 M), TYPE C (LIFTING FROM FOOTING) SEE DWG NO. TSL-1.
10. PERFORM EXPANSION BEARING RESTORATION TO BEARINGS NO. 1-14, (ITEM 15565.4302 M). SEE DWG NO. BR-6. FIXED BEARING RESTORATION TO BEARING NOS.1, 7, 8 &14
11. FOR SECTIONS A-A & B-B SEE DRAWING ST20-5.
12. SEE DWG. NO. BR-2 FOR DETAILS FOR PLACEMENT OF GALVANIZED ANODES IN PEDESTAL REPAIR AREAS.

PED. 7 WEST FACE

PEDESTAL ELEVATIONS

LEGEND:

AREA OF PROPOSED WORK; ITEM 582.05 M REMOVAL OF STRUCTURAL CONCRETE- AT LEAST 40 mm BEHIND REINFORCEMENT REPLACE WITH CLASS A CONCRETE.

ITEM 580.01 M - REMOVAL OF STRUCTURAL CONCRETE, (CM) AND ITEM 555.09 M - CONCRETE FOR STRUCTURES, CLASS HP.

B.I.N. 1031559

SPECIAL NOTE: ALL DIMENSIONS ARE SHOWN IN MILLIMETERS UNLESS OTHERWISE NOTED

AS BUILT REVISIONS

SIGNATURE DATE

INTERSTATE 81
OVER
EAST CASTLE STREET

PIER 1 (1 OF 3)

STATE OF NEW YORK
DEPARTMENT OF TRANSPORTATION

FILENAME	REGION	DATE	DRAWING NO.
380439TB.P1A	3	OCTOBER 2003	ST20-4

DESIGN SUPERVISOR PWW JOB MANAGER TAS DESIGNED BY JO CHECKED BY JRF ESTIMATED BY JRF DRAFTED BY JO/PTT CHECKED BY JRF

FED ROAD REG. NO.	STATE	CONTRACT NO.	SHEET NO.	TOTAL SHEETS
1	N.Y.	D259477	493	529

INTERSTATE ROUTE 505, SYRACUSE CITY LINE TO SIZER STREET
BRIDGE REHABILITATION PROJECT (ELEMENT SPECIFIC)
VARIOUS BRIDGES ON INTERSTATES 81 & 690
CITY OF SYRACUSE
ONONDAGA COUNTY
P.I.N. 3804.39 | B.I.N. 1031559

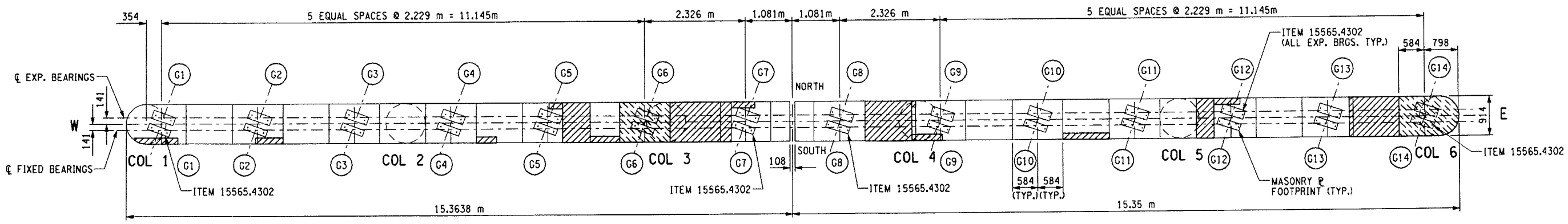

PIER 1 - TOP OF CAP BEAM PLAN

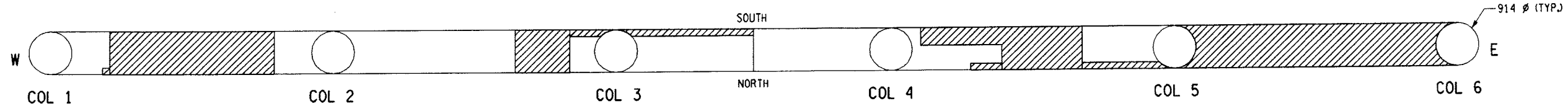

PIER 1 - UNDERSIDE OF CAP BEAM PLAN

LIST OF ITEMS USED:

ITEM 555.09 M - CONCRETE FOR STRUCTURES, CLASS HP (CM)

ITEM 580.01 M - REMOVAL OF STRUCTURAL CONCRETE (CM)

ITEM 18559.1696 M - PROTECTIVE SEALING OF STRUCTURAL CONCRETE, (SM)

ITEM 15565.4302 M - BRIDGE BEARING RESTORATION (EA)

ITEM 582.05 M - REMOVAL OF STRUCTURAL CONCRETE REPLACEMENT WITH CLASS A CONCRETE (CM)

LEGEND:

AREA OF PROPOSED WORK; ITEM 582.05 M REMOVAL OF STRUCTURAL CONCRETE- AT LEAST 40 mm BEHIND REINFORCEMENT REPLACE WITH CLASS A CONCRETE.

ITEM 580.01 M - REMOVAL OF STRUCTURAL CONCRETE, (CM) AND ITEM 555.09 M - CONCRETE FOR STRUCTURES, CLASS HP.

TABLE OF STRUCTURAL LIFTING * (JACKING LOADS)

LOCATION	ITEM	QTY (EA)	DL (KN)	LL+I (KN)	TOTAL (KN)
PED. 1-14 FIX.	585.03 M	14	128	258	386
PED. 1-14 EXP.	585.03 M	14	149	264	413

* STRUCTURAL LIFTING FROM FOOTING SHALL BE IN PLACE PRIOR TO CONCRETE REPAIRS TO PIER.

0 1 2 3 4 5 m

C&S Engineers, Inc. SYRACUSE • BUFFALO • BINGHAMTON

B.I.N. 1031559

SPECIAL NOTE: ALL DIMENSIONS ARE SHOWN IN MILLIMETERS UNLESS OTHERWISE NOTED

AS BUILT REVISIONS

SIGNATURE DATE

INTERSTATE 81
OVER
EAST CASTLE STREET

PIER 1 (2 OF 3)

STATE OF NEW YORK
DEPARTMENT OF TRANSPORTATION

FILENAME	REGION	DATE	DRAWING NO.
380439TB.P1B	3	OCTOBER 2003	ST20-5

DESIGN SUPERVISOR PWW JOB MANAGER TAS DESIGNED BY JO CHECKED BY JRF ESTIMATED BY JRF DRAFTED BY JO/PTT CHECKED BY JRF

FILE NAME = I:\Vb\V1902201\V1031559\dgn plans\380439tb.plb
DATE/TIME = 10/14/2003 8:28:35 PM
USER = phuongt

FED ROAD REG. NO.	STATE	CONTRACT NO.	SHEET NO.	TOTAL SHEETS
1	N.Y.	D259477	494	529

INTERSTATE ROUTE 505, SYRACUSE CITY LINE TO SIZER STREET

BRIDGE REHABILITATION PROJECT (ELEMENT SPECIFIC)

VARIOUS BRIDGES ON INTERSTATES 81 & 690

CITY OF SYRACUSE

ONONDAGA COUNTY

P.I.N. 3804.39 | B.I.N. 1031559

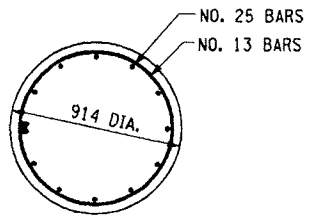

TYPICAL EXISTING COLUMN SECTION A-A

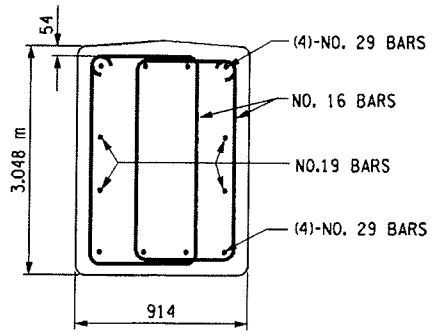

TYPICAL EXISTING CAP BEAM SECTION B-B



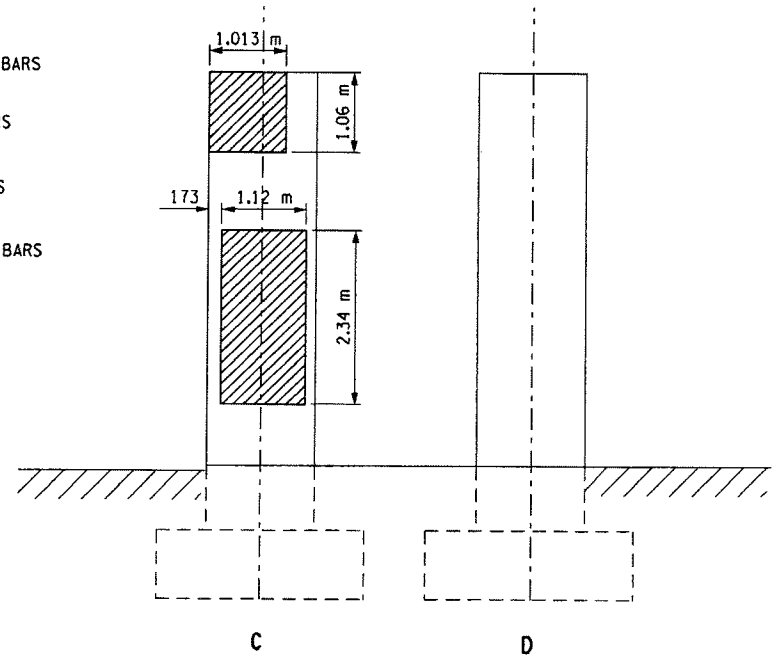

PIER 1 - ELEVATION COL 2

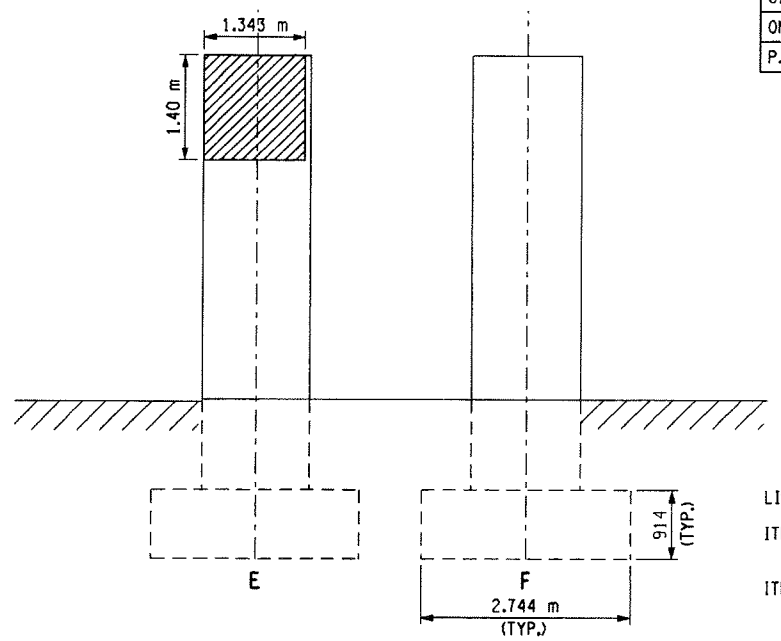

PIER 1- ELEVATION COL 3

LIST OF ITEMS USED:

ITEM 18559.1696 M - PROTECTIVE SEALING OF STRUCTURAL CONCRETE, (SM)

ITEM 582.05 M - REMOVAL OF STRUCTURAL CONCRETE REPLACEMENT WITH CLASS A CONCRETE (CM)

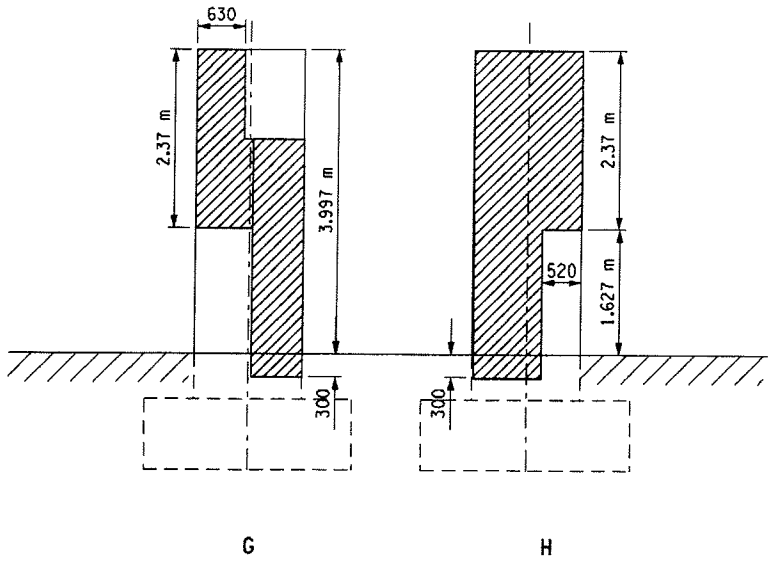

PIER 1 - ELEVATION COL 4

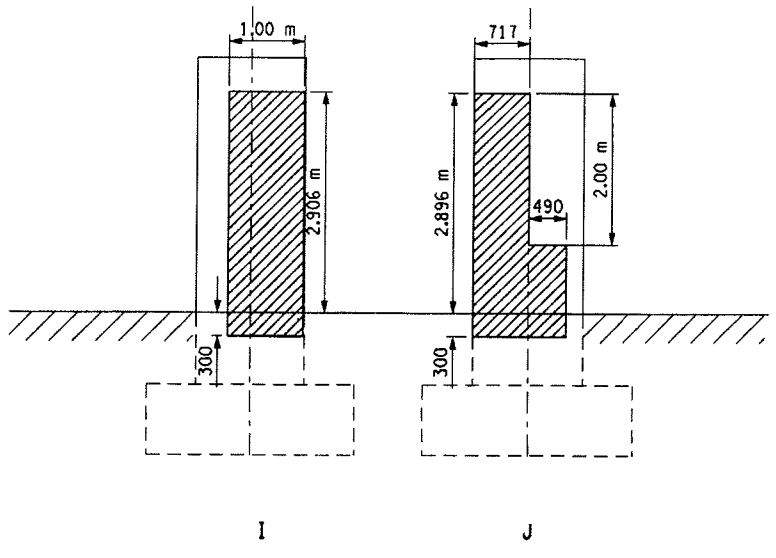

PIER 1 - ELEVATION COL 5

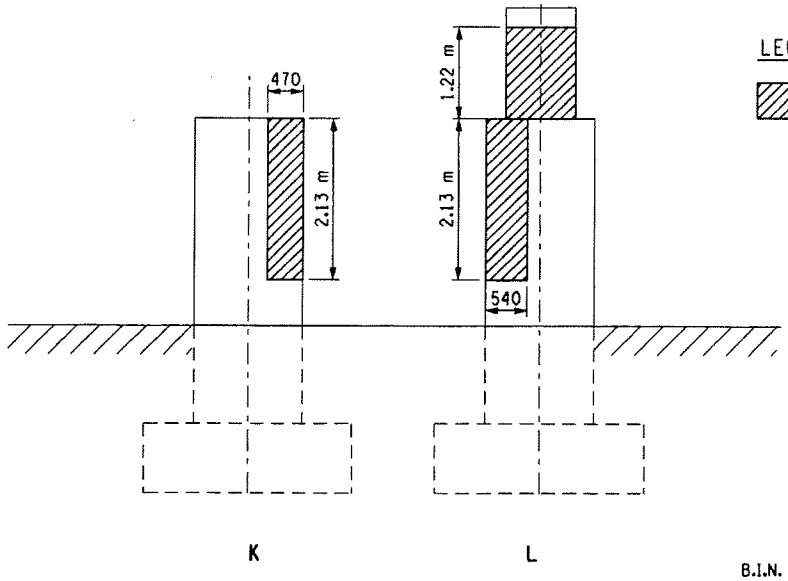

PIER 1 - ELEVATION COL 6 & PIER CAP BEAM

LEGEND:

AREA OF PROPOSED WORK; ITEM 582.05 M REMOVAL OF STRUCTURAL CONCRETE- AT LEAST 40 mm BEHIND REINFORCEMENT REPLACE WITH CLASS A CONCRETE.

NOTE:

PIER COLUMN DIAMETER = 914 mm (TYP.)

THE WIDTH OF THE PIER COLUMN SHOWN IN ELEVATION REPRESENTS THE FLATTENED AREA OF ½ THE PERIMETER OF THE STEM

SPECIAL NOTE: ALL DIMENSIONS ARE SHOWN IN MILLIMETERS UNLESS OTHERWISE NOTED

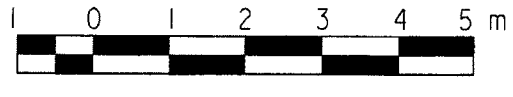

B.I.N. 1031559

AS BUILT REVISIONS

SIGNATURE DATE

INTERSTATE 81
OVER
EAST CASTLE STREET

PIER 1 (3 OF 3)

STATE OF NEW YORK
DEPARTMENT OF TRANSPORTATION

C&S Engineers, Inc.
SYRACUSE • BUFFALO • BINGHAMTON

FILENAME	REGION	DATE	DRAWING NO.
380439TB.P1C	3	OCTOBER 2003	ST20-6

DESIGN SUPERVISOR PWW JOB MANAGER TAS DESIGNED BY JO CHECKED BY JRF ESTIMATED BY JRF DRAFTED BY JO/PTT CHECKED BY JRF

SOUTH

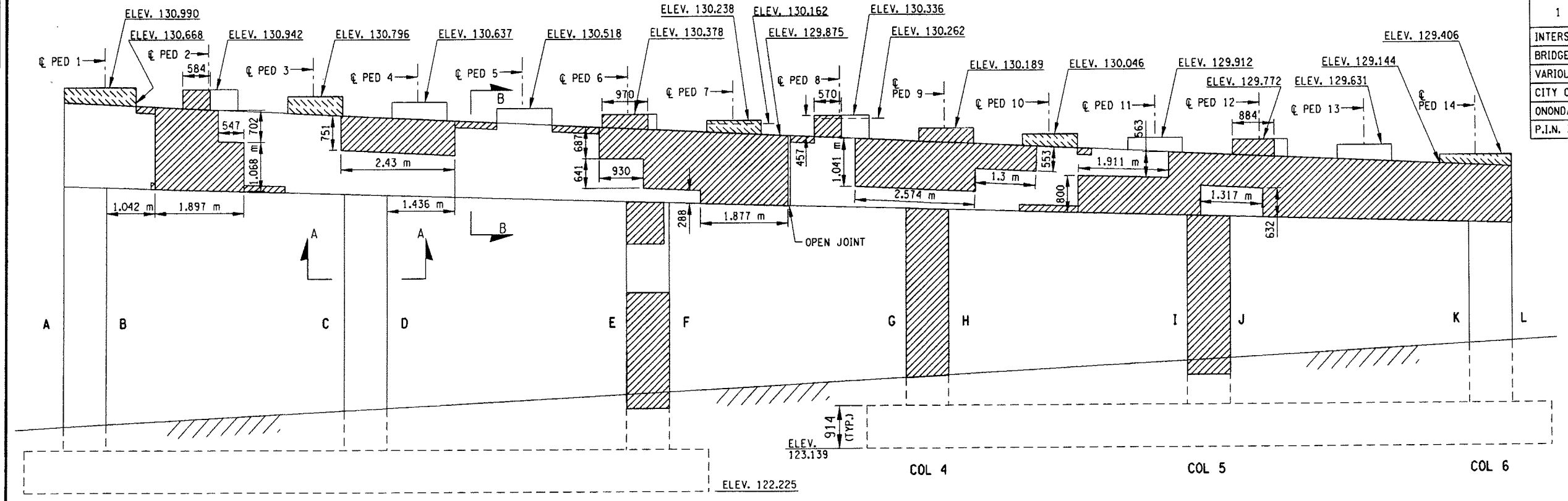

PIER 2 - SOUTH ELEVATION

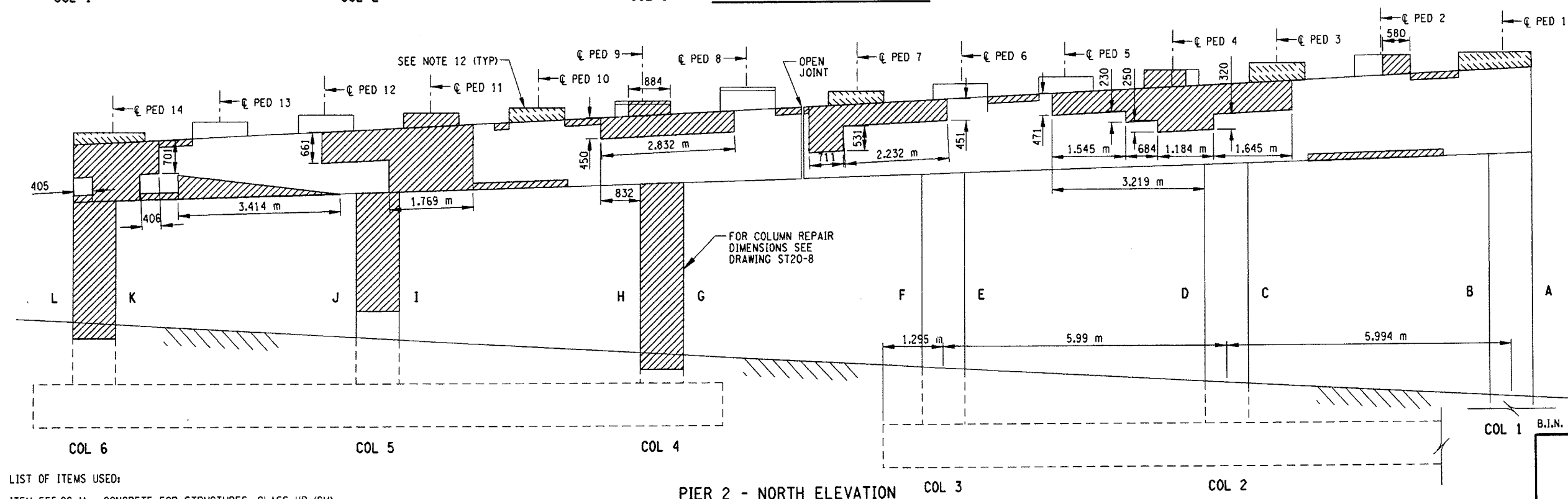

PIER 2 - NORTH ELEVATION

FED ROAD REG. NO.	STATE	CONTRACT NO.	SHEET NO.	TOTAL SHEETS
1	N.Y.	D259477	495	529

INTERSTATE ROUTE 505, SYRACUSE CITY LINE TO SIZER STREET
BRIDGE REHABILITATION PROJECT (ELEMENT SPECIFIC)
VARIOUS BRIDGES ON INTERSTATES 81 & 690
CITY OF SYRACUSE
ONONDAGA COUNTY
P.I.N. 3804.39 | B.I.N. 1031559

NOTES:

1. ALL AREAS SHOWN FOR CONCRETE REMOVAL ARE APPROXIMATE AND SHALL BE FIELD VERIFIED BY THE CONTRACTOR AND EIC.
2. CONCRETE REMOVAL TO LIMITS SHOWN INCLUDES SOUND CONCRETE AROUND THE PERIMETER OF THE DETERIORATED CONCRETE, A.O.B.E.
3. WHEN REMOVING EXISTING CONCRETE, SAWCUT 5 mm MIN. TO PRODUCE NEAT REMOVAL LINES. ANY COST TO BE INCLUDED IN THE BID PRICE FOR ITEM 582.05 M.
4. ELEVATIONS ARE GIVEN FOR REFERENCE ONLY.
5. REFER TO CONTRACT F.I.C. 64-7 FOR ORIGINAL CONSTRUCTION DETAILS.
6. FOR CONCRETE REPAIR DETAILS SEE DWG. BR-1.
7. RESTORE TO ORIGINAL DIMENSIONS.
8. PEDESTALS NUMBERED FROM WEST TO EAST.
9. STRUCTURAL LIFTING OPERATIONS FOR BEARING RESTORATION AND CONCRETE REPAIRS (ITEM 585.03 M). TYPE C (LIFTING FROM FOOTING) SEE DWG NO. TSL-1.
10. PERFORM EXPANSION BEARING RESTORATION TO BEARINGS NO. 1-14, (ITEM 15565.4302 M). SEE DWG NO. BR-6. FIXED BEARING RESTORATION TO BEARING NOS. 1,3,7,8,10 & 14
11. CRACKS IN PIER WILL BE REPAIRED AS ORDERED BY EIC BY INJECTION GROUTING METHOD UNDER ITEM 11555.8198 M.
12. SEE DWG. NO. BR-2 FOR DETAILS FOR PLACEMENT OF GALVANIZED ANODES IN PEDESTAL REPAIR AREAS.

PED. 2 EAST FACE

PED. 6 WEST FACE

PED. 12 WEST FACE

PEDESTAL ELEVATIONS

LEGEND:

AREA OF PROPOSED WORK; ITEM 582.05 M REMOVAL OF STRUCTURAL CONCRETE- AT LEAST 40 mm BEHIND REINFORCEMENT REPLACE WITH CLASS A CONCRETE.

ITEM 580.01 M - REMOVAL OF STRUCTURAL CONCRETE, (CM) AND ITEM 555.09 M - CONCRETE FOR STRUCTURES, CLASS HP.

SPECIAL NOTE: ALL DIMENSIONS ARE SHOWN IN MILLIMETERS UNLESS OTHERWISE NOTED

B.I.N. 1031559

LIST OF ITEMS USED:

ITEM 555.09 M - CONCRETE FOR STRUCTURES, CLASS HP (CM)

ITEM 580.01 M - REMOVAL OF STRUCTURAL CONCRETE (CM)

ITEM 11555.8198 M - CRACK REPAIR (3 mm OR WIDER) BY INJECTION OF PORTLAND CEMENT GROUT (m) AS ORDERED BY EIC

ITEM 18559.1696 M - PROTECTIVE SEALING OF STRUCTURAL CONCRETE, (SM)

ITEM 16570.32 M - LOCALIZED PAINTING OF BARE STRUCTURAL STEEL (SM)

ITEM 16570.76 M - LOCAL VACUUM CONTAINED CLEANING STRUCTURAL STEEL - IRREGULAR SURFACES (SM)

ITEM 15565.4302 M - BRIDGE BEARING RESTORATION (EA)

ITEM 582.05 M - REMOVAL OF STRUCTURAL CONCRETE REPLACEMENT WITH CLASS A CONCRETE (CM)

ITEM 585.03 M - STRUCTURAL LIFTING OPERATIONS - TYPE C (EA) (LIFTING FROM FOOTING)

CONCRETE TABLE (m³)		
PEDESTAL	QUANTITY	ITEM NO.
1	0.46	555.09 M
3	0.42	555.09 M
7	0.29	555.09 M
10	0.30	555.09 M
14	0.28	555.09 M

TABLE - ITEM 582.05 M	
ELEMENT	QUANTITY (CM)
PIER	7.66
PEDESTAL	0.33

TABLE - ITEM 11555.8198 M	
ELEMENT	QUANTITY (CM)
PIER	4.28

1 0 1 2 3 4 5 m

C&S Engineers, Inc. SYRACUSE • BUFFALO • BINGHAMTON

AS BUILT REVISIONS

SIGNATURE DATE

INTERSTATE 81
OVER
EAST CASTLE STREET

PIER 2 (1 OF 3)

STATE OF NEW YORK
DEPARTMENT OF TRANSPORTATION

FILENAME	REGION	DATE	DRAWING NO.
380439TB.P2A	3	OCTOBER 2003	ST20-7

DESIGN SUPERVISOR PWW | JOB MANAGER TAS | DESIGNED BY JO | CHECKED BY JO/PTT | DRAFTED BY JRF | ESTIMATED BY JRF

FILE NAME = L:\Vb\V1902201\I031559\cdp plans\380439tb.p2a
DATE/TIME = 10/14/2003 8:28:35 PM
USER = phuongt

FED ROAD REG. NO.	STATE	CONTRACT NO.	SHEET NO.	TOTAL SHEETS
1	N.Y.	D259477	496	529

INTERSTATE ROUTE 505, SYRACUSE CITY LINE TO SIZER STREET
BRIDGE REHABILITATION PROJECT (ELEMENT SPECIFIC)
VARIOUS BRIDGES ON INTERSTATES 81 & 690
CITY OF SYRACUSE
ONONDAGA COUNTY
P.I.N. 3804.39 | B.I.N. 1031559

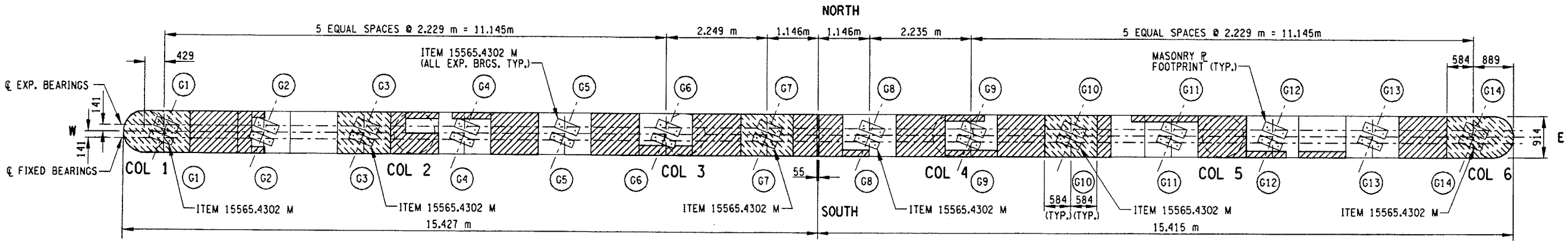

PIER 2 - TOP OF CAP BEAM PLAN

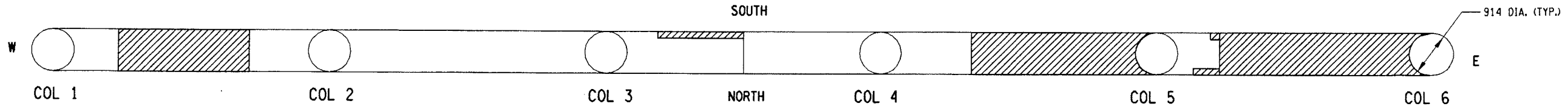

PIER 2 - UNDERSIDE OF CAP BEAM PLAN

LIST OF ITEMS USED:

ITEM 555.09 M - CONCRETE FOR STRUCTURES, CLASS HP (CM)

ITEM 580.01 M - REMOVAL OF STRUCTURAL CONCRETE (CM)

ITEM 18559.1696 M - PROTECTIVE SEALING OF STRUCTURAL CONCRETE, (SM)

ITEM 15565.4302 M - BRIDGE BEARING RESTORATION (EA)

ITEM 582.05 M - REMOVAL OF STRUCTURAL CONCRETE REPLACEMENT WITH CLASS A CONCRETE (CM)

LEGEND:

AREA OF PROPOSED WORK; ITEM 582.05 M REMOVAL OF STRUCTURAL CONCRETE- AT LEAST 40 mm BEHIND REINFORCEMENT REPLACE WITH CLASS A CONCRETE.

ITEM 580.01 M - REMOVAL OF STRUCTURAL CONCRETE, (CM) AND ITEM 555.09 M - CONCRETE FOR STRUCTURES, CLASS HP.

TABLE OF STRUCTURAL LIFTING * (JACKING LOADS)

LOCATION	ITEM	QTY (EA)	DL (KN)	LL+I (KN)	TOTAL (KN)
PED. 1-14 EXP.	585.03 M	14	128	258	386
PED. 1-14 FIX.	585.03 M	14	149	269	413

* STRUCTURAL LIFTING FROM FOOTING SHALL BE IN PLACE PRIOR TO CONCRETE REPAIRS TO PIER.

1 0 1 2 3 4 5 m

C&S Engineers, Inc. SYRACUSE • BUFFALO • BINGHAMTON

B.I.N. 1031559

SPECIAL NOTE: ALL DIMENSIONS ARE SHOWN IN MILLIMETERS UNLESS OTHERWISE NOTED

AS BUILT REVISIONS

SIGNATURE DATE

INTERSTATE 81
OVER
EAST CASTLE STREET

PIER 2 (2 OF 3)

STATE OF NEW YORK
DEPARTMENT OF TRANSPORTATION

FILENAME	REGION	DATE	DRAWING NO.
380439TB.P2B	3	OCTOBER 2003	ST20-8

DESIGN SUPERVISOR PMW JOB MANAGER TAS DESIGNED BY JO CHECKED BY JRF
ESTIMATED BY JRF DRAFTED BY JO/PTT CHECKED BY JRF

FED ROAD REG. NO.	STATE	CONTRACT NO.	SHEET NO.	TOTAL SHEETS
1	N.Y.	D259477	497	529

INTERSTATE ROUTE 505, SYRACUSE CITY LINE TO SIZER STREET
BRIDGE REHABILITATION PROJECT (ELEMENT SPECIFIC)
VARIOUS BRIDGES ON INTERSTATES 81 & 690
CITY OF SYRACUSE
ONONDAGA COUNTY
P.I.N. 3804.39 | B.I.N. 1031559

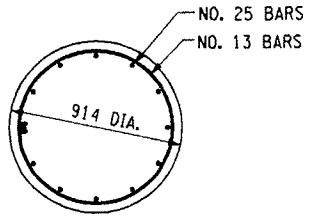

TYPICAL EXISTING COLUMN SECTION A-A

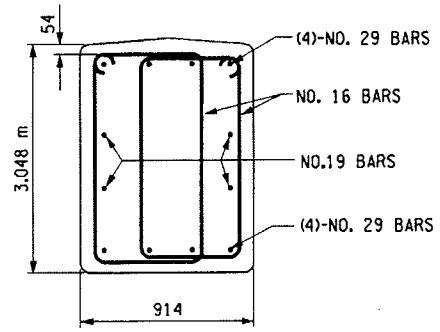

TYPICAL EXISTING CAP BEAM SECTION B-B

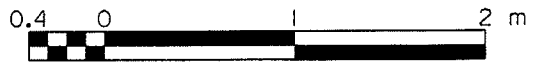

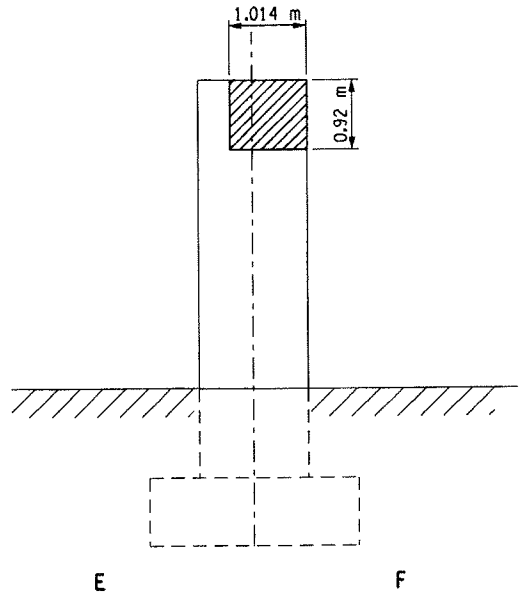

ELEVATION COL 3

LIST OF ITEMS USED:

ITEM 18559.1696 M - PROTECTIVE SEALING OF STRUCTURAL CONCRETE, (SM)

ITEM 582.05 M - REMOVAL OF STRUCTURAL CONCRETE REPLACEMENT WITH CLASS A CONCRETE (CM)

LEGEND:

AREA OF PROPOSED WORK; ITEM 582.05 M REMOVAL OF STRUCTURAL CONCRETE- AT LEAST 40 mm BEHIND REINFORCEMENT REPLACE WITH CLASS A CONCRETE.

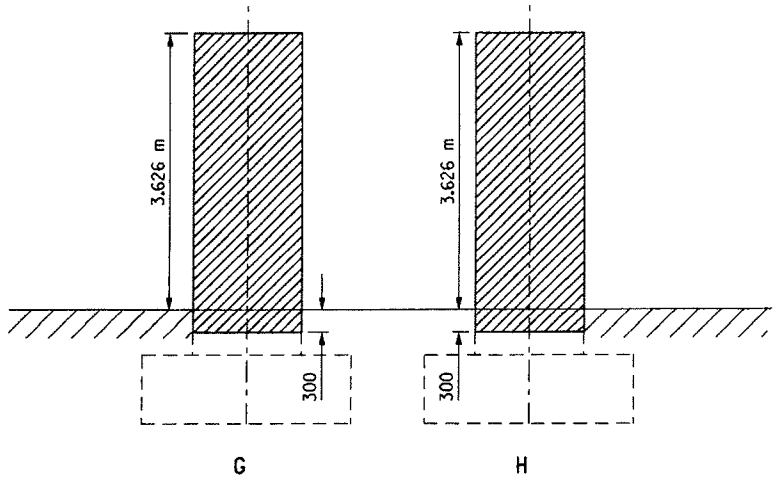

ELEVATION COL 4

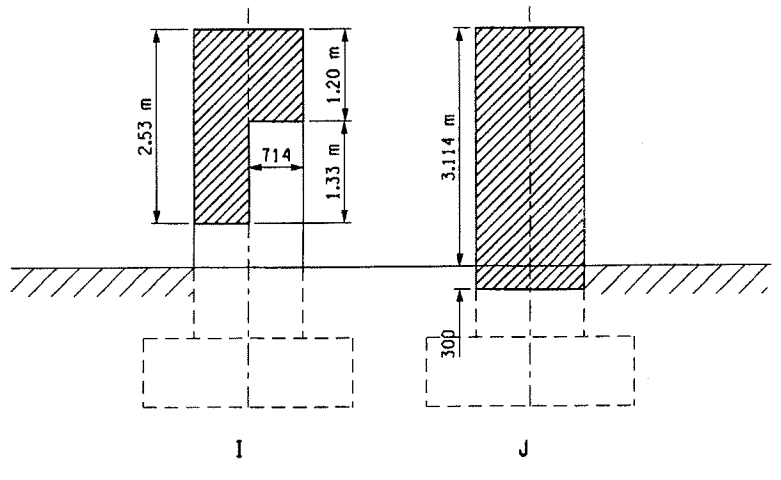

ELEVATION COL 5

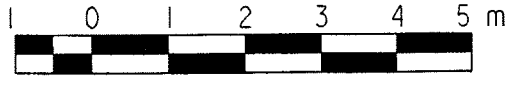

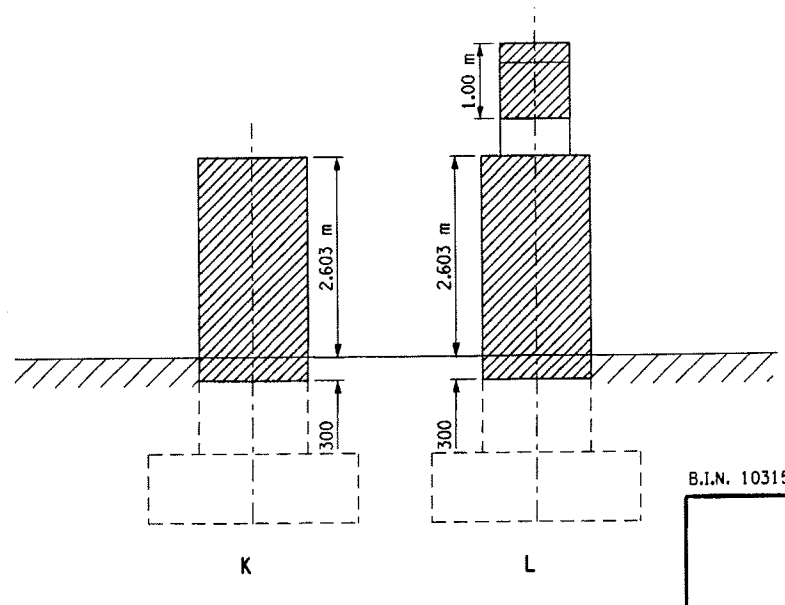

ELEVATION COL 6 & PIER CAP BEAM

NOTE:

PIER COLUMN DIAMETER = 914 mm (TYP.)

THE WIDTH OF THE PIER COLUMN SHOWN IN ELEVATION REPRESENTS THE FLATTENED AREA OF ½ THE PERIMETER OF THE STEM

SPECIAL NOTE: ALL DIMENSIONS ARE SHOWN IN MILLIMETERS UNLESS OTHERWISE NOTED

B.I.N. 1031559

AS BUILT REVISIONS

SIGNATURE _____ DATE _____

INTERSTATE 81
OVER
EAST CASTLE STREET
PIER 2 (3 OF 3)

STATE OF NEW YORK
DEPARTMENT OF TRANSPORTATION

C&S Engineers, Inc. SYRACUSE • BUFFALO • BINGHAMTON

FILENAME	REGION	DATE	DRAWING NO.
380439TB.P2C	3	OCTOBER 2003	ST20-9

DESIGN SUPERVISOR PWW JOB MANAGER TAS DESIGNED BY JO CHECKED BY JRF
DRAFTED BY JO/PTT CHECKED BY JRF
ESTIMATED BY JRF
QUANTITIES CHECKED BY JRF

FILE NAME = I:\tb\1902201\1031559\bdp plans\380439tb_p2c
DATE/TIME = 10/14/2003 8:28:34 PM
USER = phuongt

I-81 OVER EAST CASTLE STREET

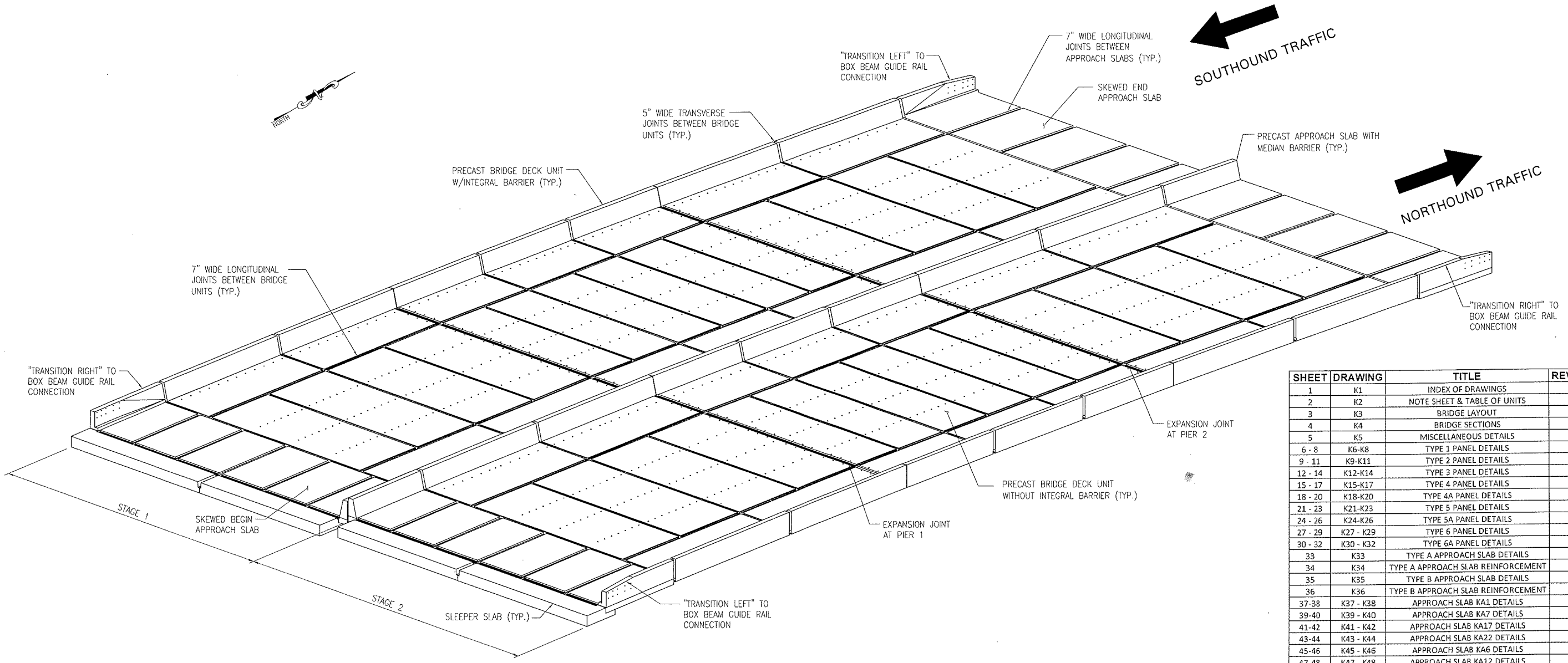

SHEET	DRAWING	TITLE	REVISION
1	K1	INDEX OF DRAWINGS	
2	K2	NOTE SHEET & TABLE OF UNITS	
3	K3	BRIDGE LAYOUT	
4	K4	BRIDGE SECTIONS	
5	K5	MISCELLANEOUS DETAILS	
6 - 8	K6-K8	TYPE 1 PANEL DETAILS	
9 - 11	K9-K11	TYPE 2 PANEL DETAILS	
12 - 14	K12-K14	TYPE 3 PANEL DETAILS	
15 - 17	K15-K17	TYPE 4 PANEL DETAILS	
18 - 20	K18-K20	TYPE 4A PANEL DETAILS	
21 - 23	K21-K23	TYPE 5 PANEL DETAILS	
24 - 26	K24-K26	TYPE 5A PANEL DETAILS	
27 - 29	K27 - K29	TYPE 6 PANEL DETAILS	
30 - 32	K30 - K32	TYPE 6A PANEL DETAILS	
33	K33	TYPE A APPROACH SLAB DETAILS	
34	K34	TYPE A APPROACH SLAB REINFORCEMENT	
35	K35	TYPE B APPROACH SLAB DETAILS	
36	K36	TYPE B APPROACH SLAB REINFORCEMENT	
37-38	K37 - K38	APPROACH SLAB KA1 DETAILS	
39-40	K39 - K40	APPROACH SLAB KA7 DETAILS	
41-42	K41 - K42	APPROACH SLAB KA17 DETAILS	
43-44	K43 - K44	APPROACH SLAB KA22 DETAILS	
45-46	K45 - K46	APPROACH SLAB KA6 DETAILS	
47-48	K47 - K48	APPROACH SLAB KA12 DETAILS	
49-50	K49 - K50	APPROACH SLAB KA11 DETAILS	
51-52	K51 - K52	APPROACH SLAB KA18 DETAILS	
53	K53	SLEEPER SLAB KS1 DETAILS	
54	K54	SLEEPER SLAB KS2 DETAILS	
55	K55	SLEEPER SLAB KS3 DETAILS	
56	K56	SLEEPER SLAB KS4 DETAILS	
57	K57	HANDLING & YARD STORAGE DETAILS	
58	K58	TRANSITION MEDIAN BARRIER DETAILS	

FED. ROAD REG. NO.	STATE	CONTRACT NO.	SHEET NO.	TOTAL SHEETS
	N.Y.	D262027		

P.I.N. #: SABP.03 B.I.N. #: 1031559

ACCELERATED BRIDGE PROGRAM–PHASE 1A, CONTRACT 3

INTERSTATE 81 OVER EAST CASTLE STREET

CITY OF SYRACUSE

ONONDAGA COUNTY

THE FORT MILLER Co., Inc.
P.O. BOX 98
SCHUYLERVILLE, NY 12871
(518) 695-5000
(518) 695-4970 FAX
www.fortmiller.com

NO.	DATE	BY	DESCRIPTION

REVISIONS

I-81 OVER EAST CASTLE STREET

CITY OF SYRACUSE

BRIDGE SECTION

ENGINEER: NYSDOT

CONTRACTOR: SLATE HILL CONSTRUCTORS, INC. 6573 HERMAN ROAD WARNERS, NEW YORK 13164

DRAWN BY:	DATE	CHK'D BY:	SHEET	SCALE	F.M. JOB No.	DWG.
VCE	6/14/13	PJR	1	NONE	13716	K1



PLAN VIEW I-81 OVER EAST CASTLE STREET

INDICATES PANEL TYPE

FED. ROAD REG. NO.	STATE	CONTRACT NO.	SHEET NO.	TOTAL SHEETS
	N.Y.	D262027		

P.I.N. #: SABP.03 B.I.N. #: 1031559

ACCELERATED BRIDGE PROGRAM–PHASE 1A, CONTRACT 3

INTERSTATE 81 OVER EAST CASTLE STREET

CITY OF SYRACUSE

ONONDAGA COUNTY

THE FORT MILLER Co., Inc.
P.O. BOX 98
SCHUYLERVILLE, NY 12871
(518) 695-5000
(518) 695-4970 FAX
www.fortmiller.com

REVISIONS

NO.	DATE	BY	DESCRIPTION

I-81 OVER EAST CASTLE STREET

CITY OF SYRACUSE

BRIDGE DECK LAYOUT

ENGINEER: NYSDOT

CONTRACTOR: SLATE HILL CONSTRUCTORS, INC. 6573 HERMAN ROAD WARNERS, NEW YORK 13164

DRAWN BY:	DATE	CHK'D BY:	SHEET	SCALE	F.M. JOB No.	DWG.
VCE	6/14/13	PJR	3	NONE	13716	K3

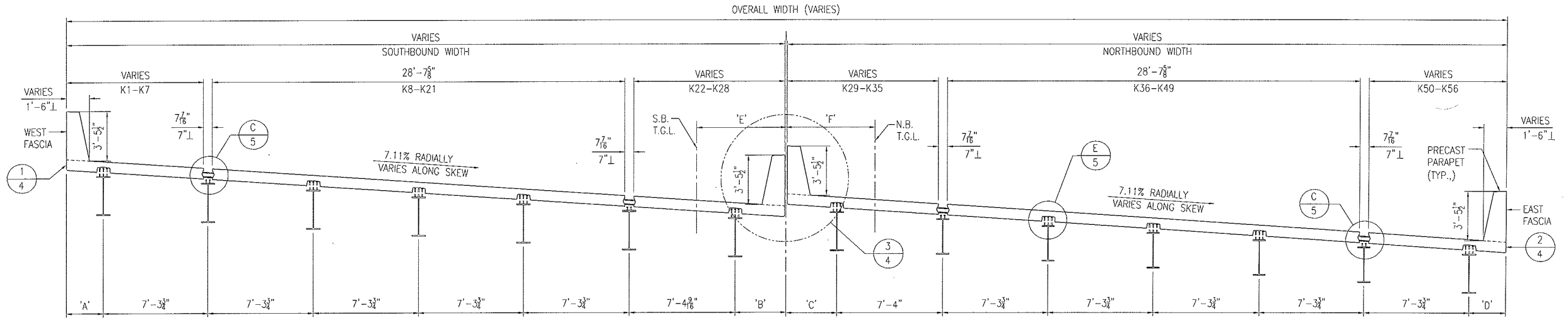

PROPOSED BRIDGE CROSS SECTION B-B

NOTE: ALL DIMENSIONS ARE ALONG THE CENTERLINE OF BEARING

OVERHANG DIMENSIONS				
LOCATION	'A'	'B'	'C'	'D'
SPAN 1, S.A.	2'-6⅝"	3'-5"	3'-4⅞"	2'-6⅜"
SPAN 1, PIER 1	2'-6½"	3'-8⅛"	3'-7⅞"	2'-6⅛"
SPAN 2, PIER 1	2'-6⅛"	3'-6⅜"	3'-6⅛"	2'-6⅛"
SPAN 2, PIER 2	2'-6⅛"	3'-9⅛"	3'-8⅛"	2'-7⅛"
SPAN 3, PIER 2	2'-7"	3'-9⅛"	3'-9⅛"	2'-7⅛"
SPAN 3, N.A.	2'-6⅛"	4'-0"	4'-0"	2'-7⅞"

2.37 3.68

BRIDGE DIMENSIONS						
LOCATION	S.B. WIDTH	N.B. WIDTH	CENTER JOINT	OVERALL WIDTH	S.B. T.G.L. 'E'	N.B. T.G.L. 'F'
SPAN 1, S.A.	49'-9⅜"	49'-8⅞"	2⅛"	99'-6⅜"	6'-5⅛"	6'-5⅛"
SPAN 1, PIER 1	49'-11⅜"	49'-10⅞"	2⅛"	100'-0⅜"	6'-2⅛"	6'-2⅜"
SPAN 2, PIER 1	49'-11½"	49'-10⅞"	2⅛"	100'-0½"	6'-2⅜"	6'-2⅜"
SPAN 2, PIER 2	50'-2⅛"	50'-2"	2⅛"	100'-6¼"	5'-11⅛"	5'-10¾"
SPAN 3, PIER 2	50'-2⅛"	50'-1⅞"	2⅛"	100'-6¼"	5'11⅛"	5'-10¾"
SPAN 3, N.A.	50'-5⅛"	50'-5⅜"	2⅛"	101'-0⅜"	5'-8"	5'-7⅛"

NOTE: ALL DIMENSIONS ARE ALONG THE SKEW AT THE END OF THE BRIDGE DECK, ALONG THE CENTERLINE BEARING

46.83' 46.87'

17.66 .958

21.77

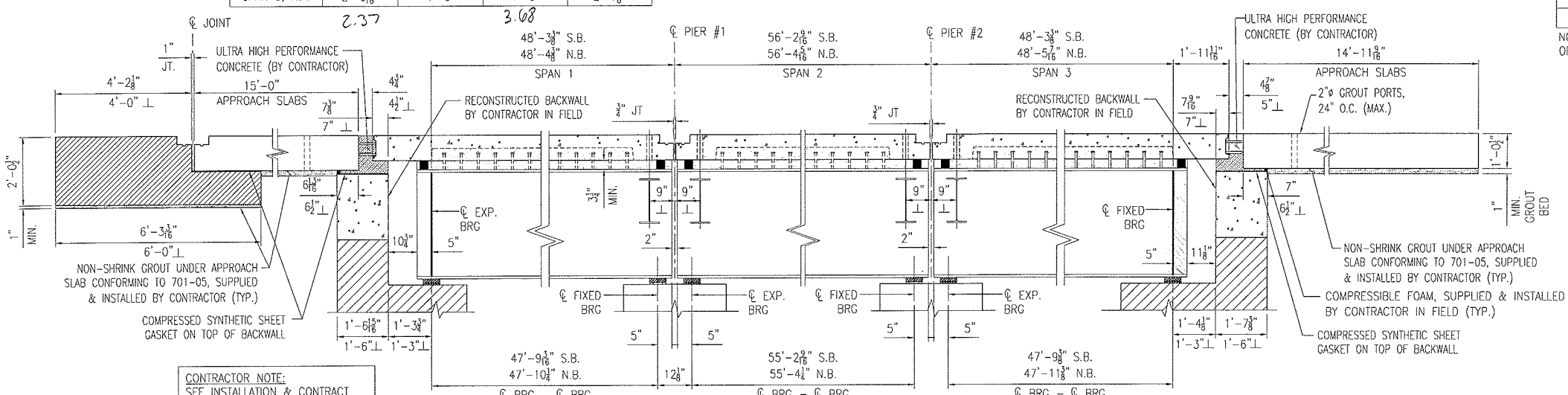

A/4 LONGITUDINAL SECTION A-A
ALONG SKEW

CONTRACTOR NOTE:
SEE INSTALLATION & CONTRACT DRAWINGS FOR ADDITIONAL DETAILS OF APPROACH SLAB INSTALLATION.

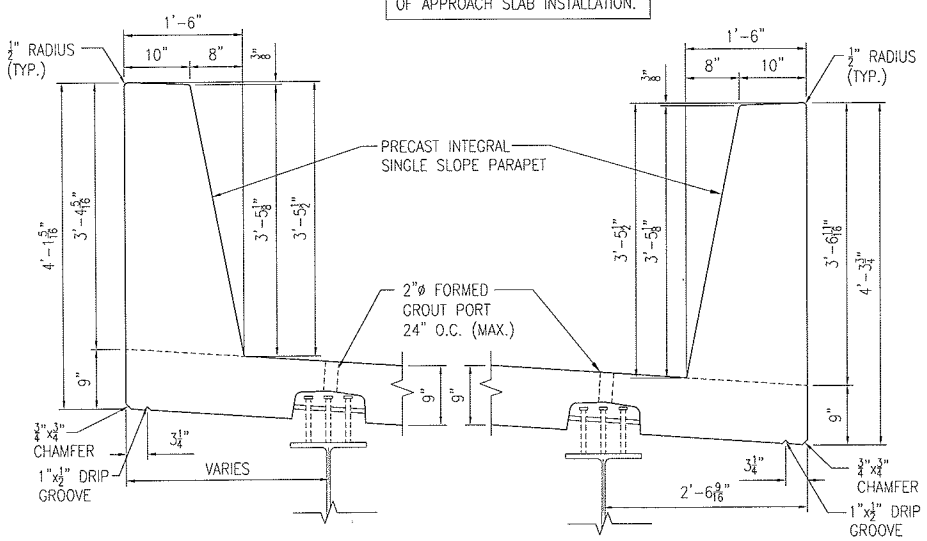

1/4 "UPHILL" FASCIA DETAIL
WESTSIDE FASCIA-PERPENDICULAR SECTION

2/4 "DOWN HILL" FASCIA DETAIL
EASTSIDE FASCIA-PERPENDICULAR SECTION

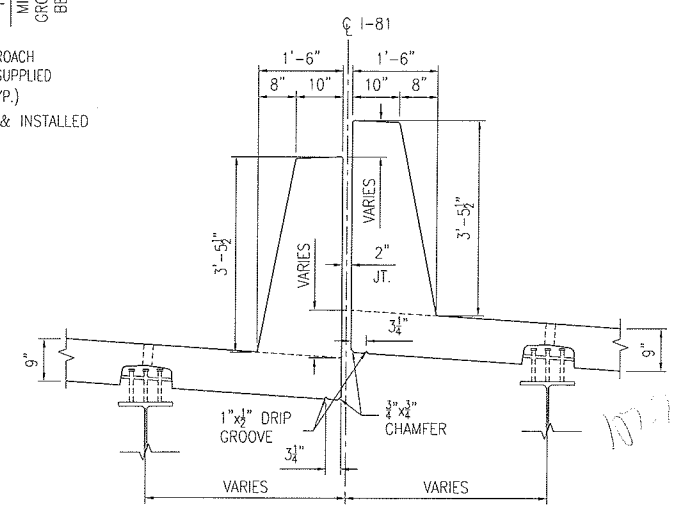

3/4 MEDIAN DETAIL
PERPENDICULAR SECTION

FED. ROAD REG. NO.	STATE	CONTRACT NO.	SHEET NO.	TOTAL SHEETS
	N.Y.	D262027		
P.I.N. #: SABP.03		B.I.N. #: 1031559		
ACCELERATED BRIDGE PROGRAM-PHASE 1A, CONTRACT 3				
INTERSTATE 81 OVER EAST CASTLE STREET				
CITY OF SYRACUSE				
ONONDAGA COUNTY				

THE FORT MILLER Co., Inc.
P.O. BOX 98
SCHUYLERVILLE, NY 12871
(518) 695-5000
(518) 695-4970 FAX
www.fortmiller.com

NO.	DATE	BY	DESCRIPTION

REVISIONS

I-81 OVER EAST CASTLE STREET
CITY OF SYRACUSE

BRIDGE SECTIONS

ENGINEER: NYSDOT

CONTRACTOR: SLATE HILL CONSTRUCTORS, INC. 6573 HERMAN ROAD WARNERS, NEW YORK 13164

DRAWN BY:	DATE	CHK'D BY:	SHEET	SCALE	F.M. JOB No.	DWG.
VCE	6/14/13	PJR	4	NONE	13716	K4

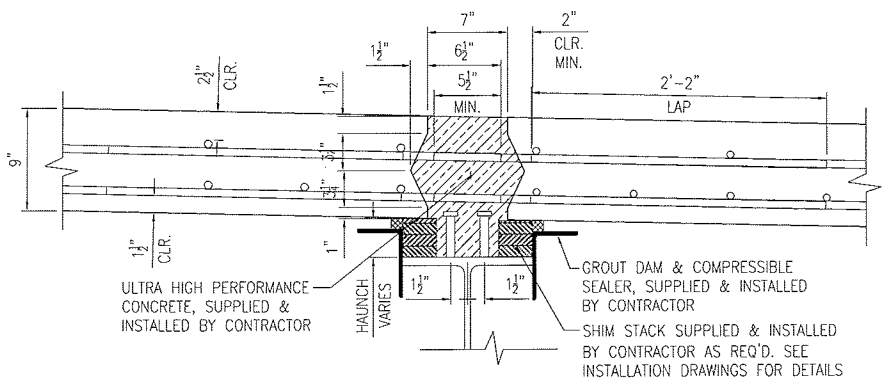

C/5 **SECTION C-C**
LONGITUDINAL UHPC JOINT OVER BEAMS

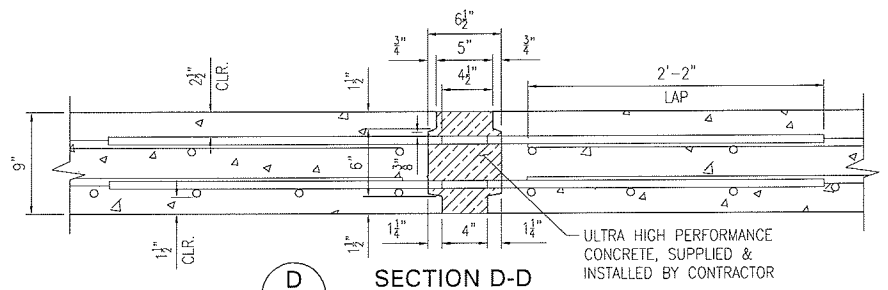

D/5 **SECTION D-D**
TRANSVERSE UHPC BETWEEN DECK PANELS

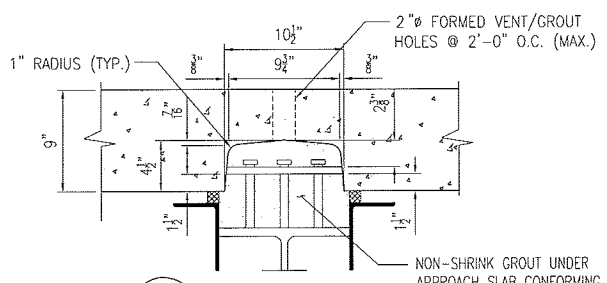

E/5 **SECTION E-E**
NON-SHRINK GROUT JOINT OVER INTERIOR BEAMS (PERPENDICULAR SECTION)

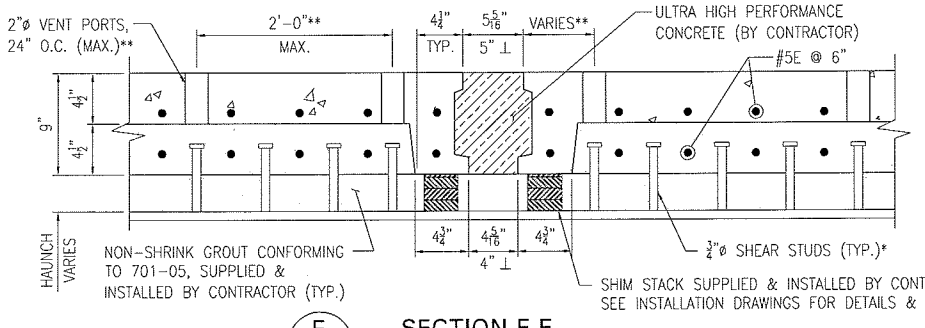

F/5 **SECTION F-F**
TRANSVERSE UHPC BETWEEN DECK PANELS
* SEE SHEAR STUD LAYOUT FOR SPACING
** SEE STUD POCKET DETAILS FOR GROUT PORT LOCATIONS

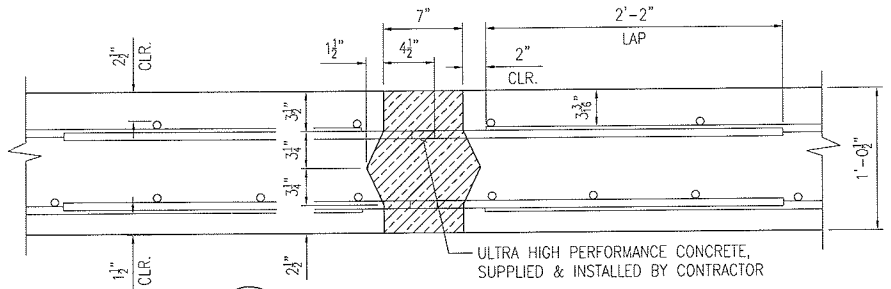

G/5 **SECTION G-G, UHPC JOINT**
PRECAST APPROACH SLABS-LONGITUDINAL JOINT

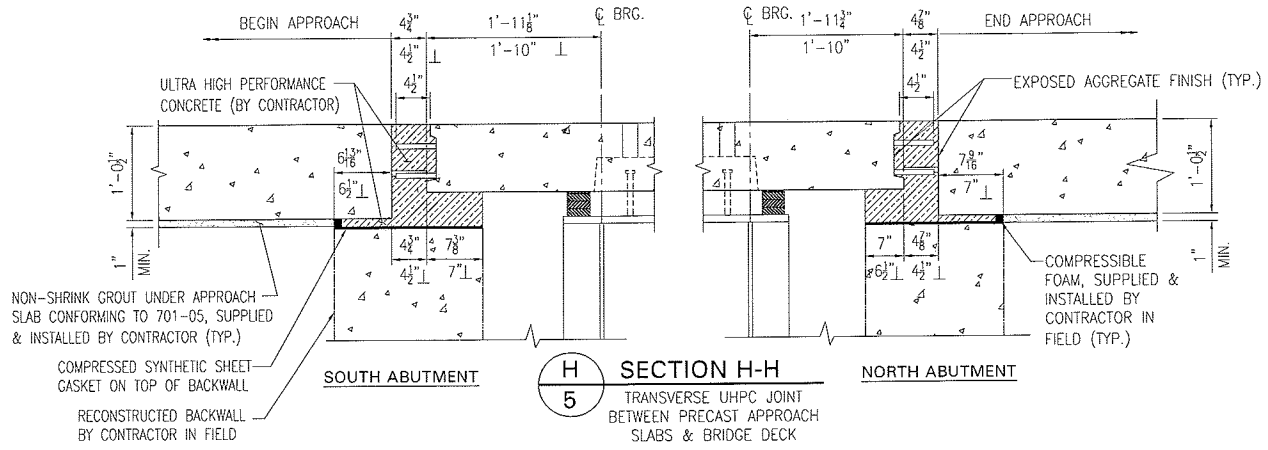

H/5 **SECTION H-H**
TRANSVERSE UHPC JOINT BETWEEN PRECAST APPROACH SLABS & BRIDGE DECK

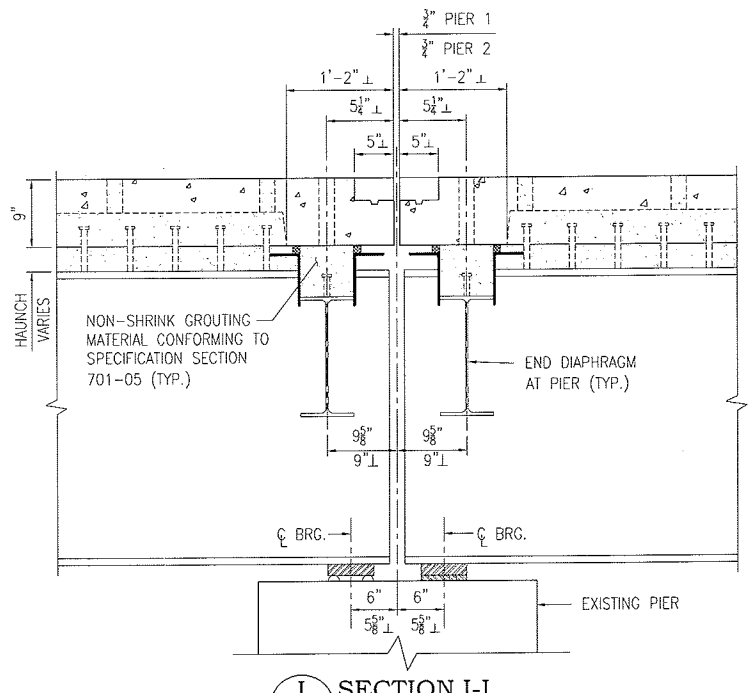

I/5 **SECTION I-I**
PIER DETAIL

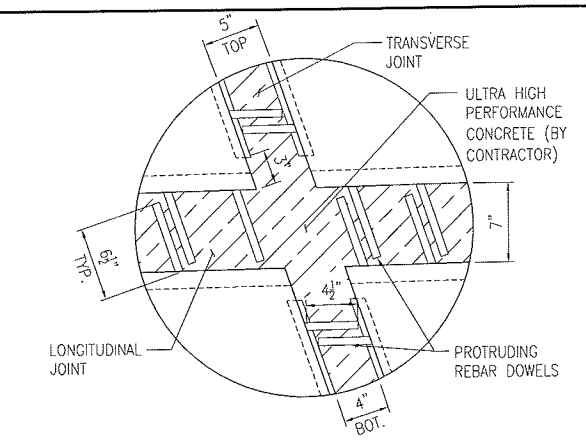

3/5 **PLAN VIEW - FULL WIDTH INTERIOR JOINT**
* STOP BOTTOM LIP ON TRANSVERSE JOINT 3" IN FROM END OF PANEL (SEE ISOMETRIC VIEW). ONLY REQUIRED ON TRANSVERSE JOINTS THAT GO FULL WIDTH OF BRIDGE

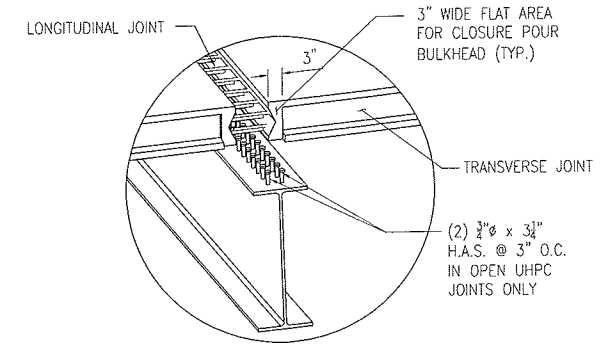

ISOMETRIC VIEW-INTERIOR JOINT
NOTE: ALL SURFACES IN JOINT TO BE EXPOSED AGGREGATE

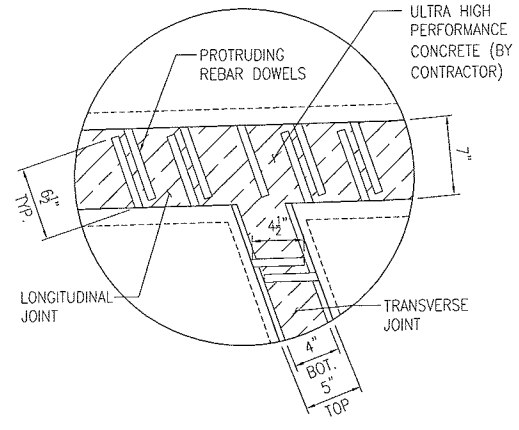

4/5 **PLAN VIEW - INTERMEDIATE INTERIOR JOINT**
BOTTOM LIP ON TRANSVERSE JOINT IS FULL WIDTH (NO BLOCKOUT)

FED. ROAD REG. NO.	STATE	CONTRACT NO.	SHEET NO.	TOTAL SHEETS
	N.Y.	D262027		
P.I.N. #: SABP.03		B.I.N. #: 1031559		
ACCELERATED BRIDGE PROGRAM-PHASE 1A, CONTRACT 3				
INTERSTATE 81 OVER EAST CASTLE STREET				
CITY OF SYRACUSE				
ONONDAGA COUNTY				

THE FORT MILLER Co., Inc.
P.O. BOX 98
SCHUYLERVILLE, NY 12871
(518) 695-5000
(518) 695-4970 FAX
www.fortmiller.com

NO.	DATE	BY	DESCRIPTION

REVISIONS

I-81 OVER EAST CASTLE STREET
CITY OF SYRACUSE

MISCELLANEOUS DETAILS

ENGINEER: NYSDOT

CONTRACTOR: SLATE HILL CONSTRUCTORS, INC. 6573 HERMAN ROAD WARNERS, NEW YORK 13164

DRAWN BY:	DATE	CHK'D BY:	SHEET	SCALE	F.M. JOB No.	DWG.
VCE	6/20/13	PJR	5	NONE	13716	K5

PRECAST CONCRETE DETAILS

2013

DSM6M 9/16/2013

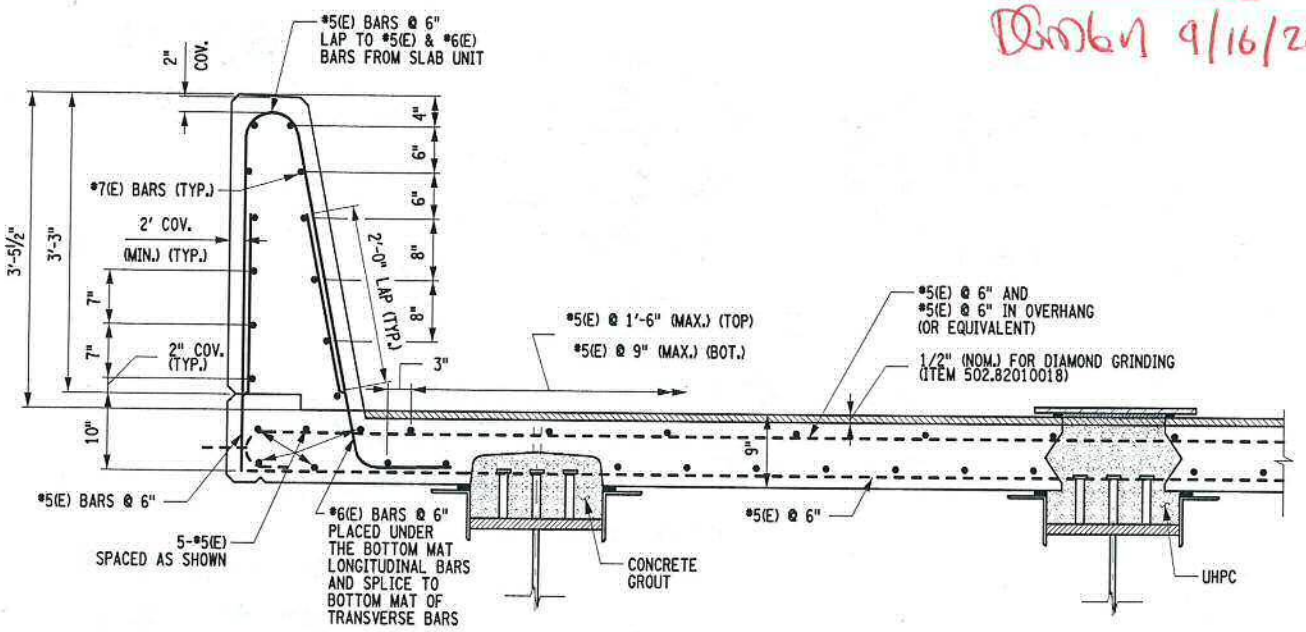

PRECAST BARRIER ON PRECAST BRIDGE DECK PANEL

NOTE: PANEL JOINT LOCATION SHOWN IS FOR ILLUSTRATIVE PURPOSES ONLY. ACTUAL JOINT LOCATION SHALL BE DETERMINED BY THE FABRICATOR.

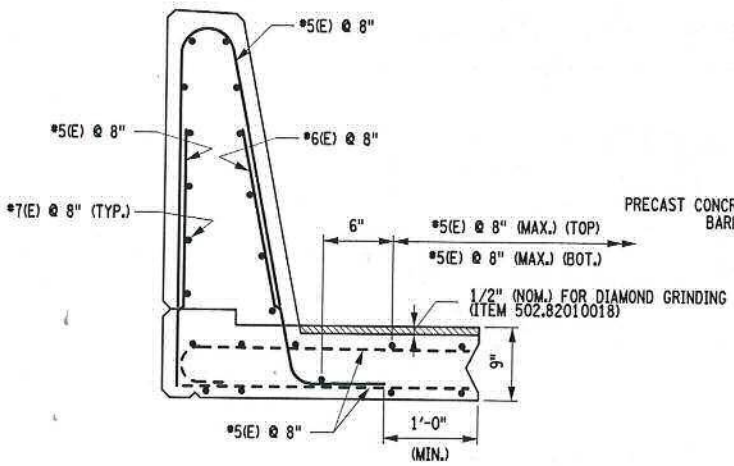

PRECAST BARRIER ON PRECAST APPROACH SLAB PANEL

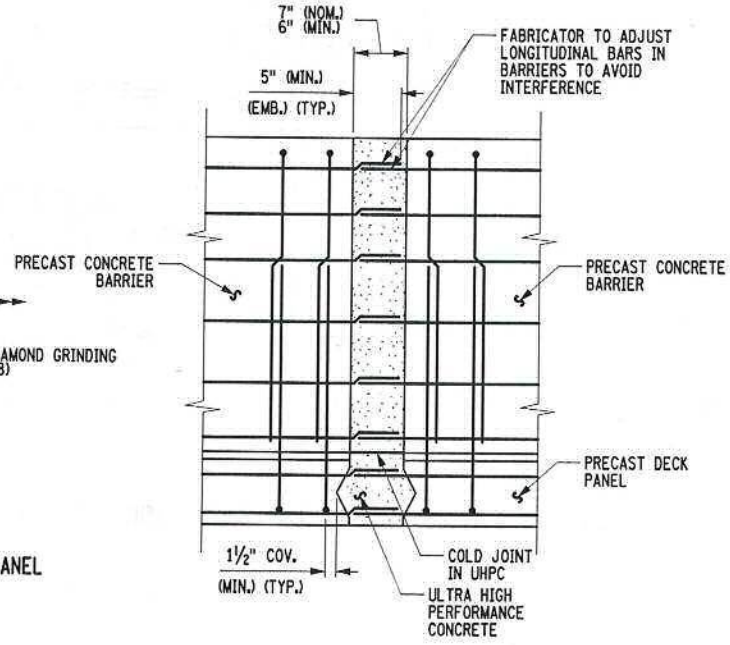

ELEVATION
TYPICAL UHPC BARRIER JOINT

NOTES:

FINAL COVER FOR STEEL REINFORCEMENT IN PRECAST PANELS SHALL BE 2" (MIN.) FOR TOP MAT AND 1½" FOR BOTTOM MAT.

(E) - DENOTES EPOXY COATED REINFORCEMENT

FOR OVERALL BARRIER DIMENSIONS, SEE THE "SINGLE SLOPE BARRIER" DETAILS IN THE APPROPRIATE BD'S.

THE SIZE AND NUMBER OF STUD SHEAR CONNECTORS VARIES. SEE BIN SPECIFIC CONTRACT DOCUMENTS FOR INFORMATION.

THE UHPC JOINTS IN THE BARRIER SHALL BE SMOOTH AND FLUSH WITH THE BARRIER SURFACE.

D262027

PRECAST CONCRETE DETAILS

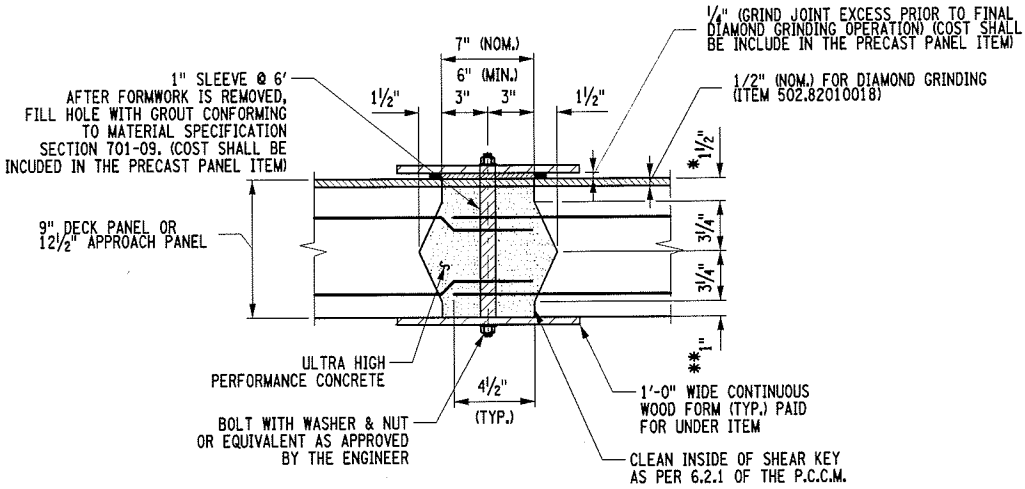

TYPICAL UHPC JOINT DETAIL

*THIS DIMENSION SHALL BE 3 1/2" FOR UHPC JOINTS IN APPROACH PANELS

**THIS DIMENSION SHALL BE 2 1/2" FOR UHPC JOINTS IN APPROACH PANELS

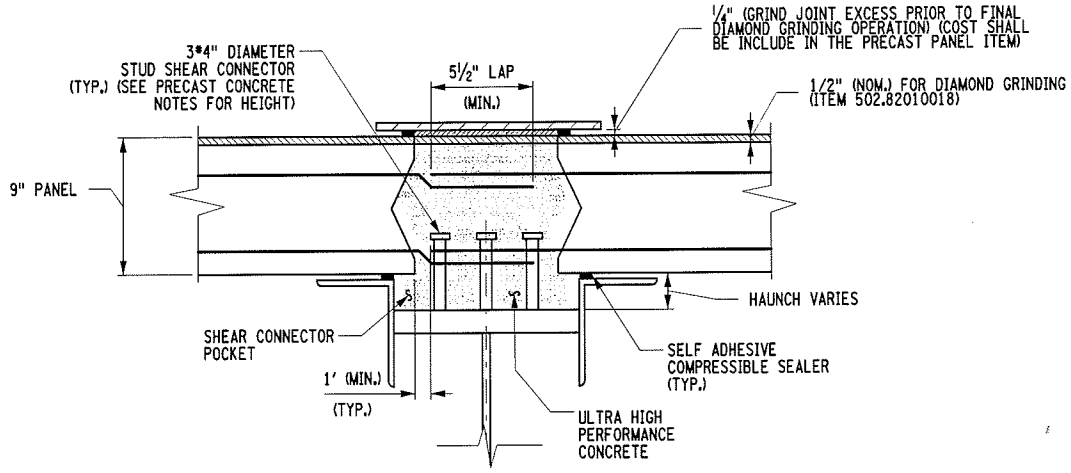

LONGITUDINAL UHPC JOINT OVER GIRDER DETAIL

NOTES:

FINAL COVER FOR STEEL REINFORCEMENT IN PRECAST PANELS SHALL BE 2" (MIN.) FOR TOP MAT AND 1 1/2" FOR BOTTOM MAT.

THE SIZE AND NUMBER OF STUD SHEAR CONNECTORS VARIES. SEE BIN SPECIFIC CONTRACT DOCUMENTS FOR INFORMATION.

PRECAST CONCRETE DETAILS

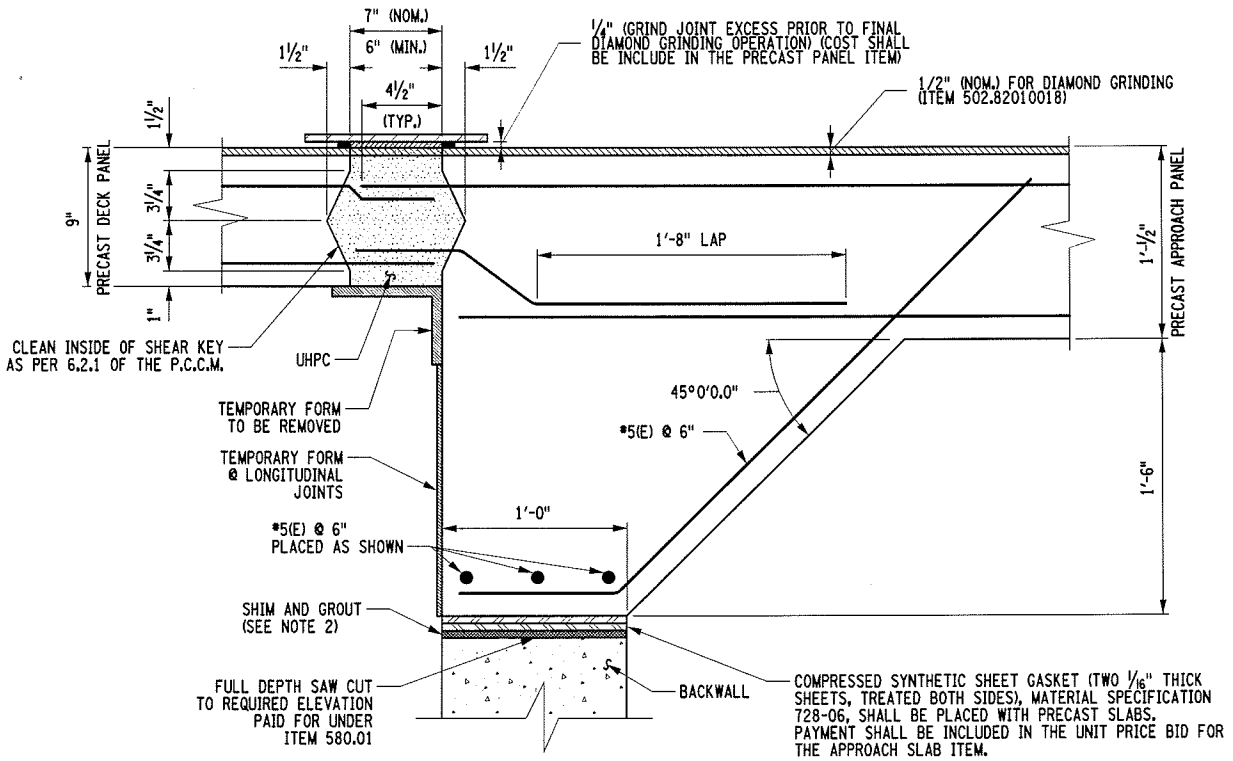

UHPC BACKWALL FIXED JOINT DETAIL

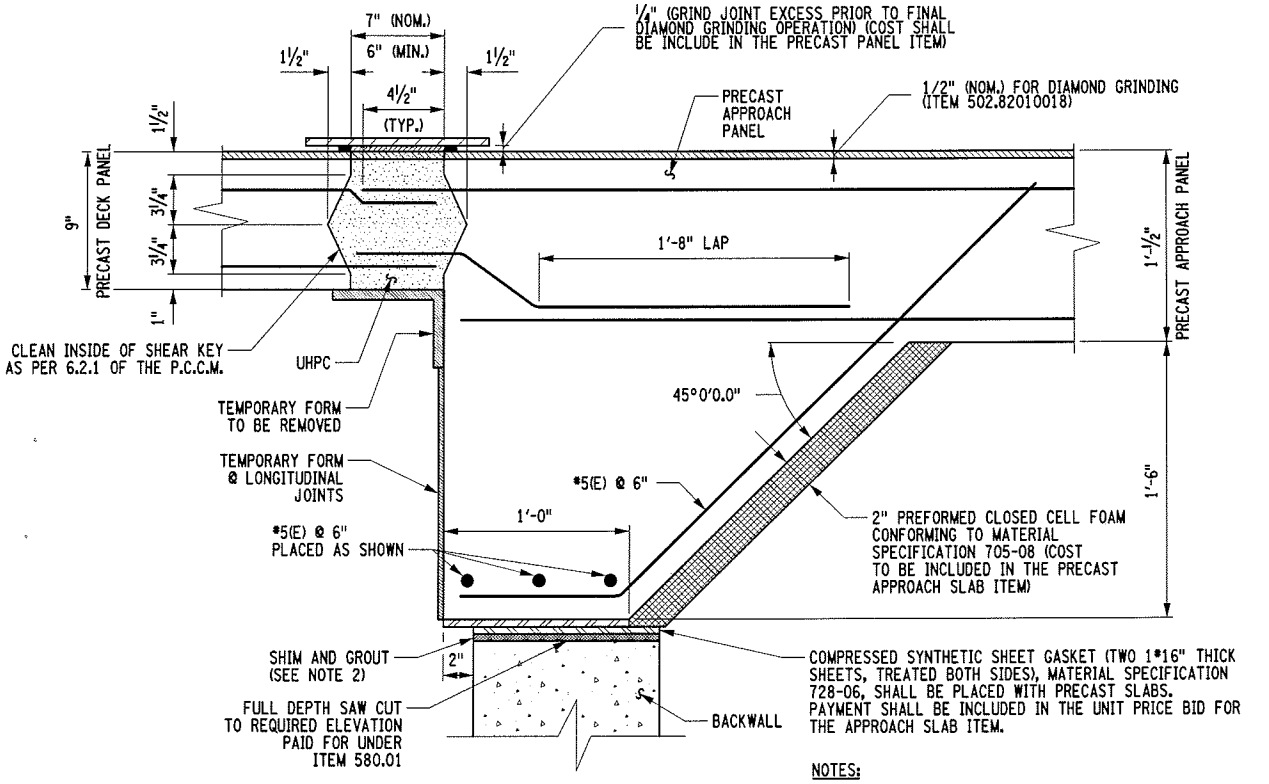

UHPC BACKWALL EXPANSION JOINT DETAIL

NOTES:

1. FINAL COVER FOR STEEL REINFORCEMENT IN PRECAST PANELS SHALL BE 2" (MIN.) FOR TOP MAT AND 1½" FOR BOTTOM MAT.

2. CONCRETE GROUTING MATERIAL SHALL CONFORM TO MATERIAL SPECIFICATION SECTION 701-06. COST SHALL BE INCLUDED IN PRICE BID FOR THE DECK PANEL ITEM.

D262027

PRECAST CONCRETE DETAILS

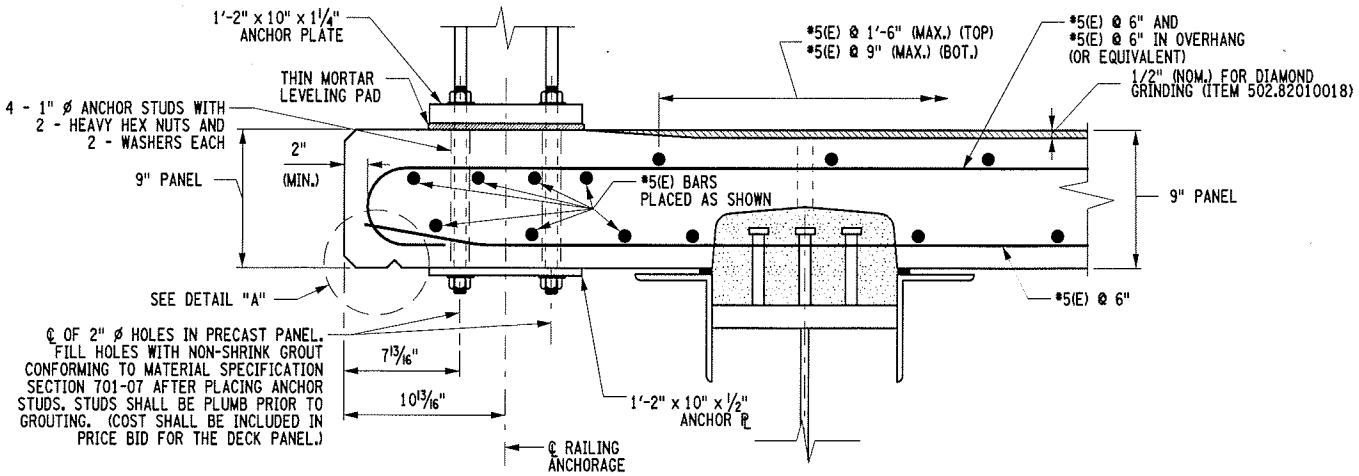

TYPICAL RAILING ANCHORAGE DETAIL

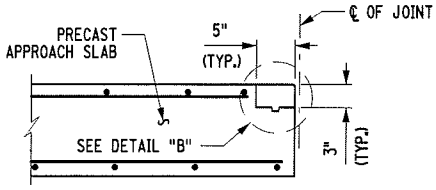

HEADER DETAIL IN PRECAST PANEL
FOR JOINT LOCATIONS
(PAID FOR UNDER ITEM 567.60)

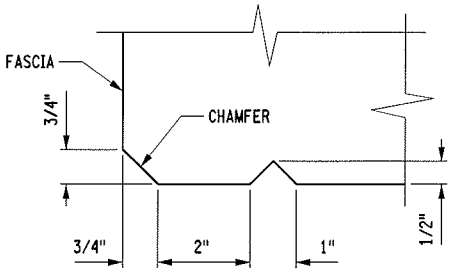

DETAIL "A"

NOTE:

DRIP GROOVE TO END 3' FROM FACES OF ABUTMENTS WITH A 90° TURN TOWARD FASCIA. GROOVE CONTINUES TO INTERSECTION WITH THE CHAMFER.

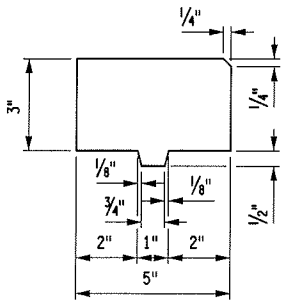

DETAIL "B"
ELASTOMERIC CONCRETE HEADER

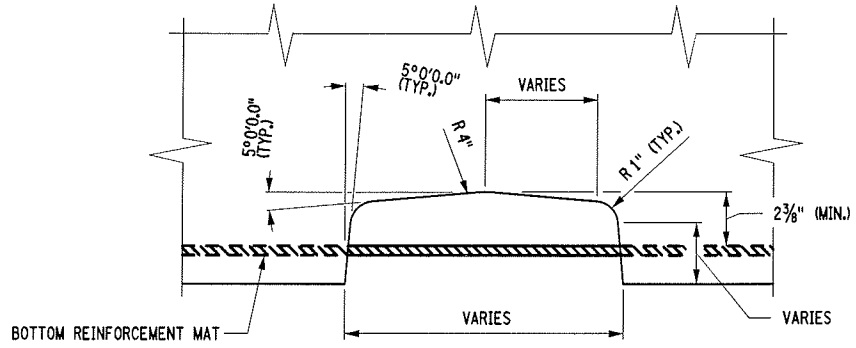

SHEAR CONNECTOR POCKET DETAIL

PRECAST CONCRETE DETAILS

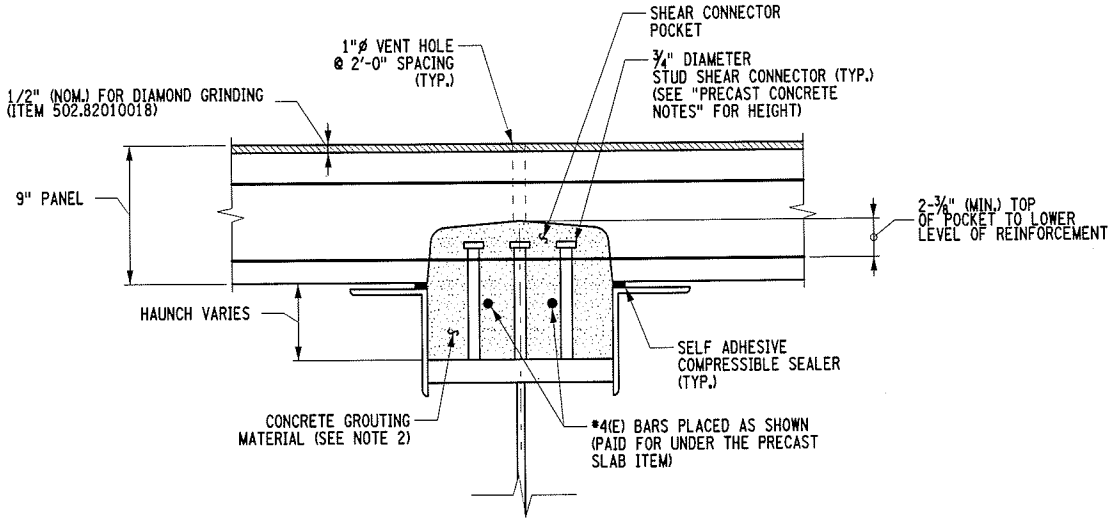

SHEAR CONNECTOR POCKET DETAIL HAUNCH ≥ 6"

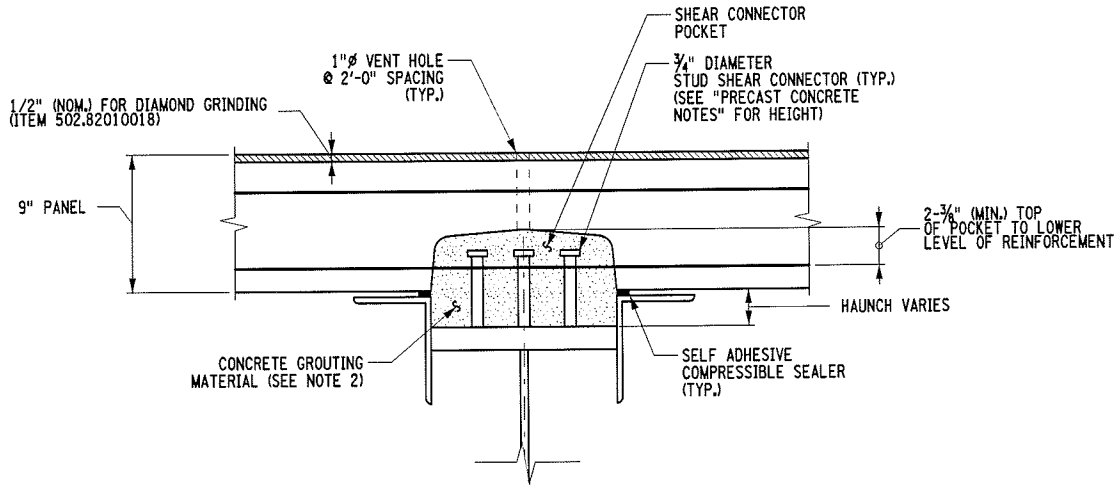

SHEAR CONNECTOR POCKET DETAIL W/HAUNCH

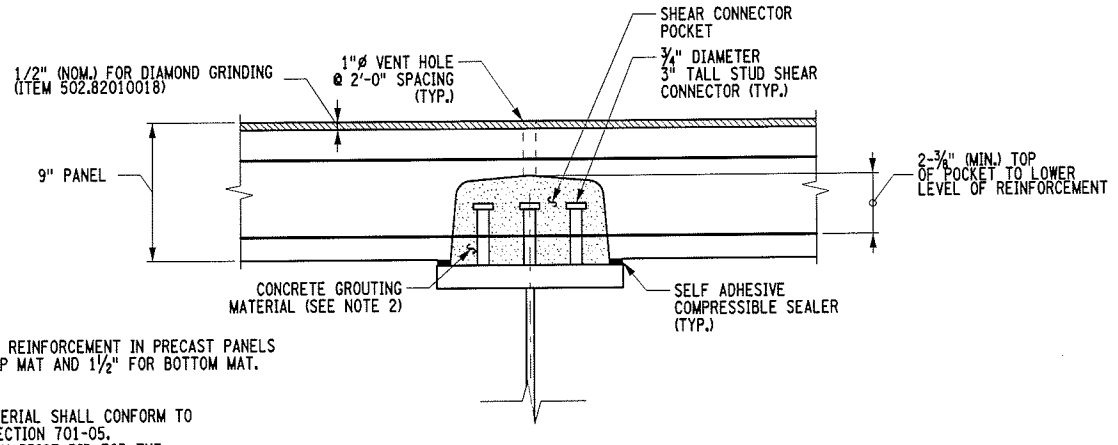

SHEAR CONNECTOR POCKET DETAIL W/O HAUNCH

NOTES:

1. FINAL COVER FOR STEEL REINFORCEMENT IN PRECAST PANELS SHALL BE 2" (MIN.) FOR TOP MAT AND 1½" FOR BOTTOM MAT.

2. CONCRETE GROUTING MATERIAL SHALL CONFORM TO MATERIAL SPECIFICATION SECTION 701-05. COST SHALL BE INCLUDED IN PRICE BID FOR THE DECK PANEL ITEM.

3. THE SIZE AND NUMBER OF STUD SHEAR CONNECTORS VARIES. SEE BIN SPECIFIC CONTRACT DOCUMENTS FOR INFORMATION.

D262027
PRECAST CONCRETE DETAILS

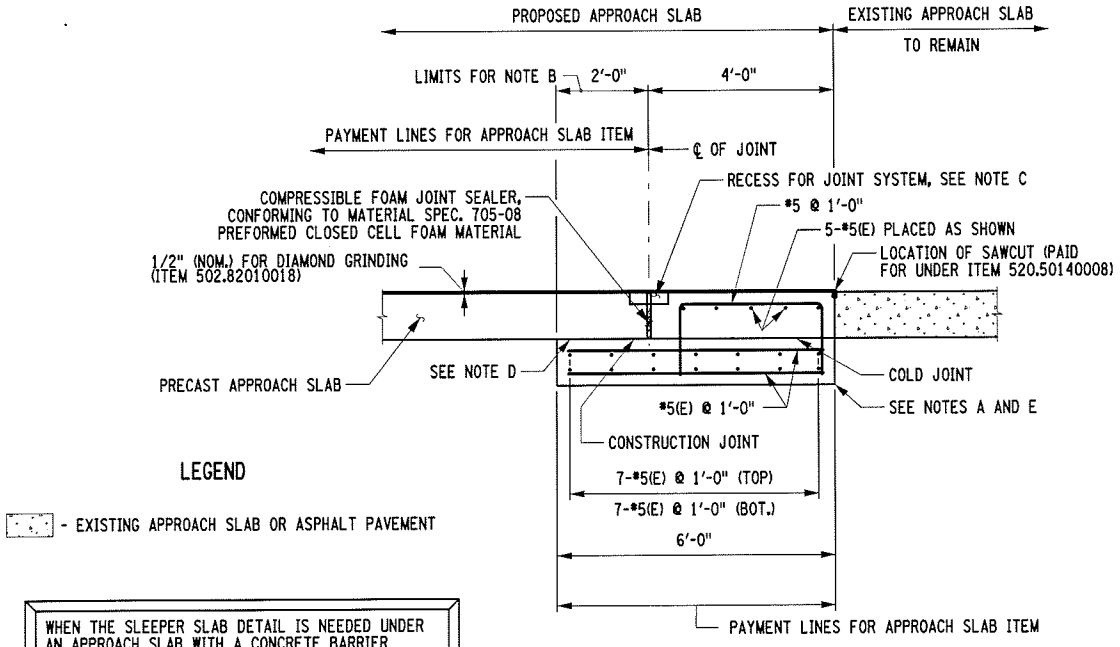

WHEN THE SLEEPER SLAB DETAIL IS NEEDED UNDER AN APPROACH SLAB WITH A CONCRETE BARRIER ATTACHED TO IT, THE SLEEPER SLAB SHALL BE FROM FACE OF BARRIER TO FACE OF BARRIER.

PRECAST SLEEPER SLAB DETAIL

NOTES:

A. EXCAVATION FOR SLEEPER SLABS SHALL BE CAREFULLY MADE AFTER COMPACTED ABUTMENT EMBANKMENT IS IN PLACE. THE SLEEPER SLABS SHALL BE FOUNDED ON UNDISTURBED COMPACT MATERIAL OR RE-COMPACTED MATERIAL. NO LOOSE BACKFILL SHALL BE ALLOWED. THE CONTRACTOR SHALL TAKE ALL NECESSARY PRECAUTIONS TO PROTECT THE SLEEPER SLAB FROM TEMPORARY LOADINGS OR ANY CONDITION WHICH COULD CAUSE MOVEMENTS OR UNEVEN SETTLEMENT OF THE SLEEPER SLAB.

B. TOP OF SLEEPER SLABS SHALL BE STEEL TROWEL FINISHED AND COATED WITH A 0.04 in. NOMINAL THICKNESS OF PERFORMANCE GRADE ASPHALT AS INDICATED IN THE PROPOSAL, OR MATERIAL SPECIFICATION 702-3101. THE TOP OF SLEEPER SLABS SHALL FOLLOW THE CROSS SLOPE AND GRADE OF ROADWAY. COST TO BE INCLUDED IN THE UNIT PRICE BID FOR THE APPROACH SLAB ITEM.

C. IF A MODULAR JOINT SYSTEM IS USED, CONCRETE FURNISHED AND PLACED IN THE RECESSES FOR INSTALLING THE JOINT SYSTEM SHALL COMPLY WITH THE SPECIFICATIONS FOR THE APPROACH SLAB ITEM, EXCEPT THAT MACHINE FINISHING WILL NOT BE REQUIRED. NO ADDITIONAL PAYMENT WILL BE MADE FOR FURNISHING AND PLACING THIS CONCRETE AS THIS QUANTITY LIES WITHIN THE LIMITS OF THE AREA TO BE PAID FOR UNDER THE APPROACH SLAB ITEM. IF AN ARMORLESS JOINT IS USED, PAYMENT FOR THE ELASTOMERIC CONCRETE HEADERS SHALL BE INCLUDED IN THE ITEM FOR THE JOINT SYSTEM. THE JOINT SYSTEM SHALL BE PAID FOR UNDER ITS APPROPRIATE ITEM.

D. COMPRESSED SYNTHETIC SHEET GASKET, MATERIAL SPECIFICATION 728-06 (TWO 1/16" THICK SHEETS, TREATED BOTH SIDES) SHALL BE PLACED WITH PRECAST UNITS. SHIM AND GROUT AS CALLED FOR ON THE BACKWALL DETAILS. PRICE WILL BE INCLUDED IN THE UNIT PRICE BID FOR THE APPROACH SLAB ITEM.

E. PAYMENT FOR SLEEPER SLAB EXCAVATION SHALL BE INCLUDED IN THE APPROACH SLAB ITEM.

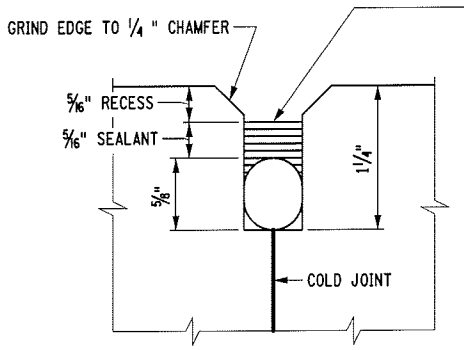

FILL THE RECESS WITH A STRUCTURAL JOINT MATERIAL, SILICONE SEALANT, FROM THE DEPARTMENT'S APPROVED LIST FOR ITEM 567.51--16. IF THE RECESS IS SAW CUT, WATER BLAST IMMEDIATELY FOLLOWING CUTTING TO REMOVE ANY RESIDUAL SLURRY BEFORE IT DRIES. CLEAN THE VERTICAL FACES OF THE RECESS BY ABRASIVE BLAST AND AIR BLOW THE RESIDUE FROM THE RECESS. PRIME THE VERTICAL FACES WITH THE MANUFACTURER'S RECOMMENDED PRIMER, AND ALLOW TO DRY. PLACE A 5/8" DIA. SOFT CLOSED CELL BACKER ROD IN THE BOTTOM OF RECESS. POUR THE SILICONE SEALANT TO A DEPTH OF APPROX. 5/16". PAYMENT TO BE INCLUDED IN THE UNIT PRICE BID FOR THE APPROACH SLAB.

JOINT RECESS DETAIL

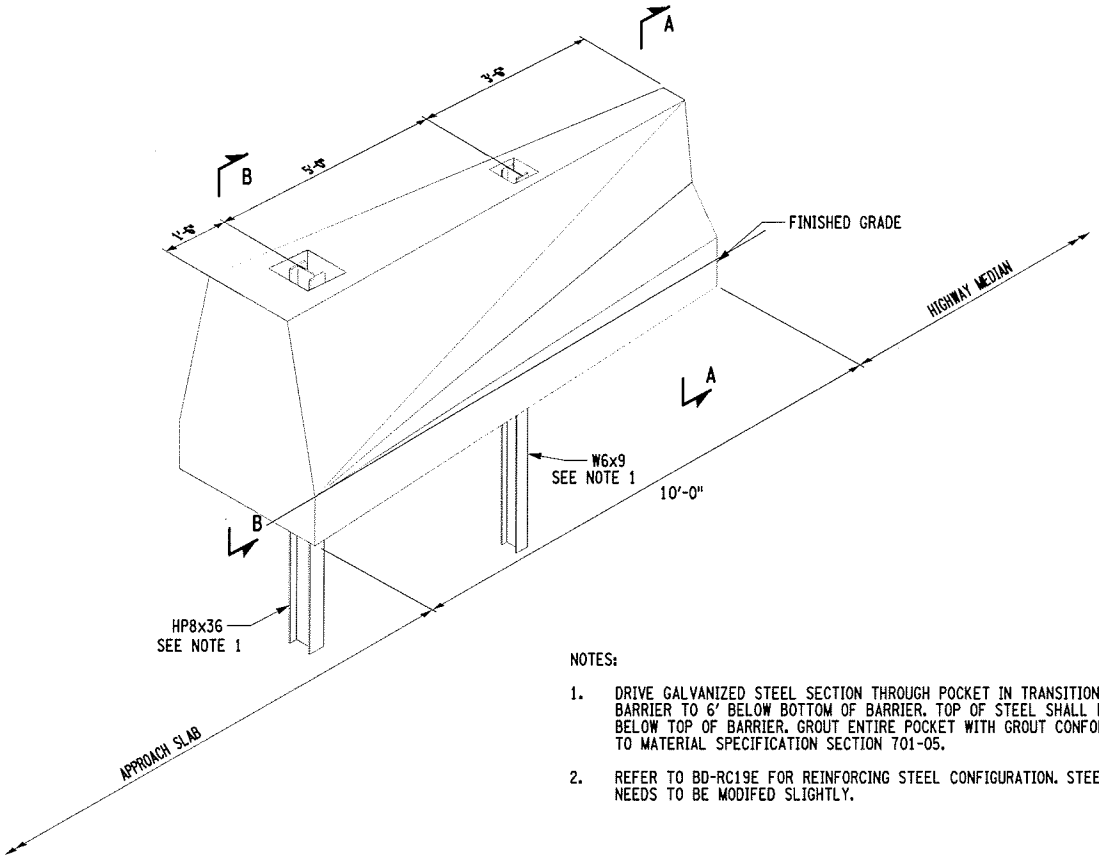

NOTES:

1. DRIVE GALVANIZED STEEL SECTION THROUGH POCKET IN TRANSITION BARRIER TO 6' BELOW BOTTOM OF BARRIER. TOP OF STEEL SHALL BE 3" BELOW TOP OF BARRIER. GROUT ENTIRE POCKET WITH GROUT CONFORMING TO MATERIAL SPECIFICATION SECTION 701-05.
2. REFER TO BD-RC19E FOR REINFORCING STEEL CONFIGURATION. STEEL NEEDS TO BE MODIFED SLIGHTLY.

MEDIAN TRANSITION BARRIER DETAIL
(BIN 1031559)
(PAID FOR UNDER ITEM 557.11010003)

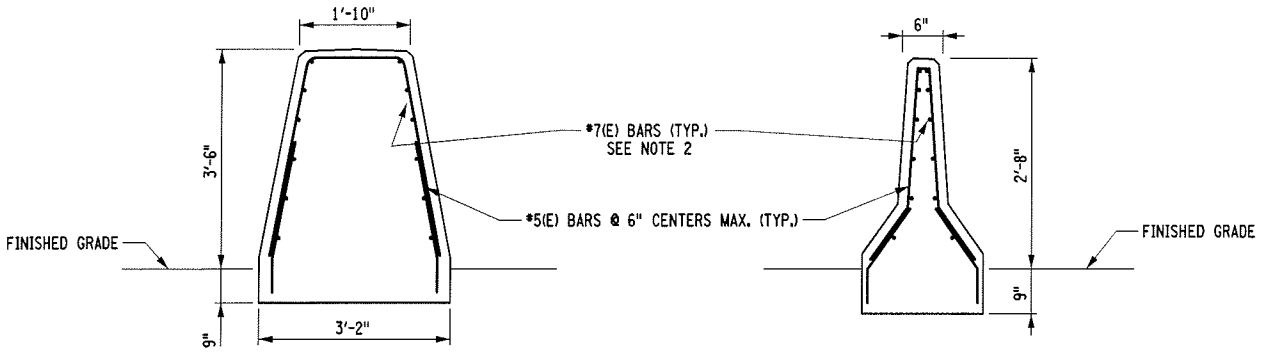

SECTION B-B SECTION A-A

BIN: 1031559
I-81/ East Castle Street

BEGIN ABUTMENT DETERRIORATION SKETCH
LEFT SIDE

NOT TO SCALE

DATE: 03/31/2014

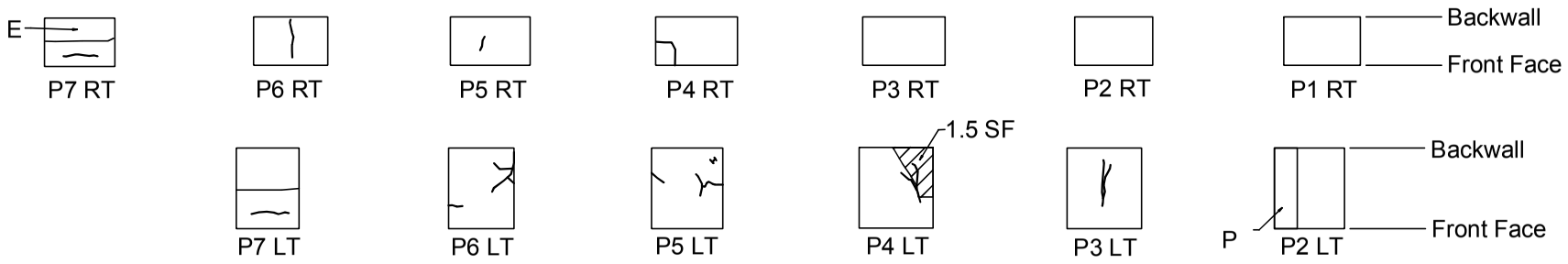

SIDES OF PEDESTAL PROJECTION

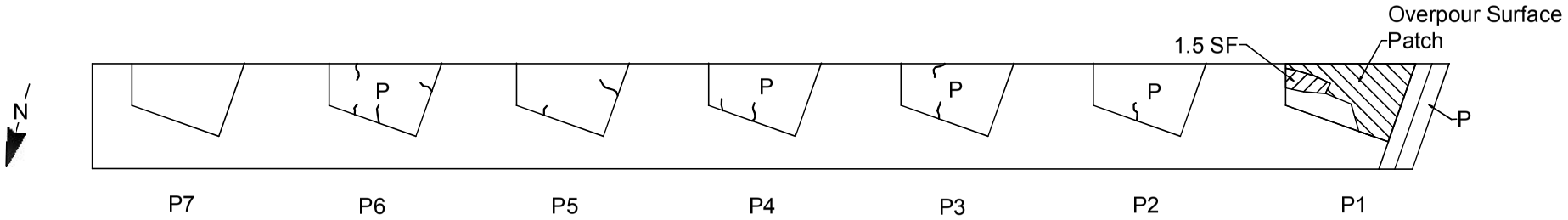

PLAN

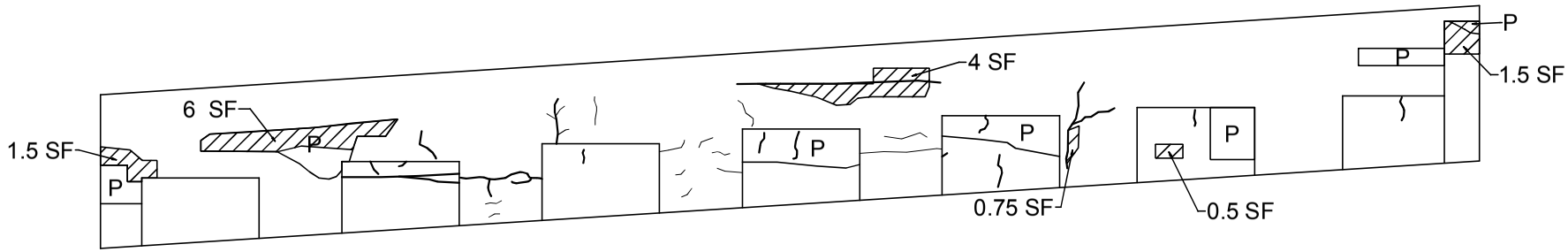

ELEVATION

LEGEND					
Hollow Concrete	P	Patch	Spall		
E	Efflorescence	Crack	Hairline Crack		

BIN: 1031559
I-81/ East Castle Street

BEGIN ABUTMENT DETERRIORATION SKETCH
RIGHT SIDE

NOT TO SCALE

DATE: 03/31/2014
SHEET 2 OF 2

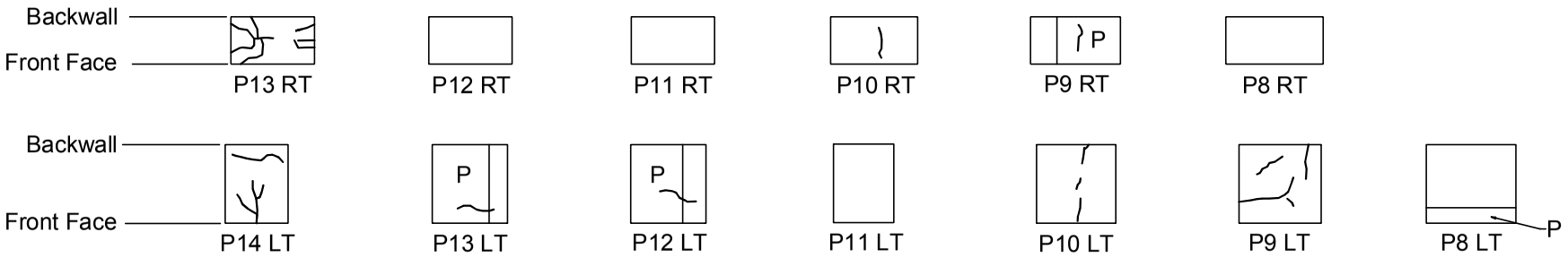

SIDES OF PEDESTAL PROJECTION

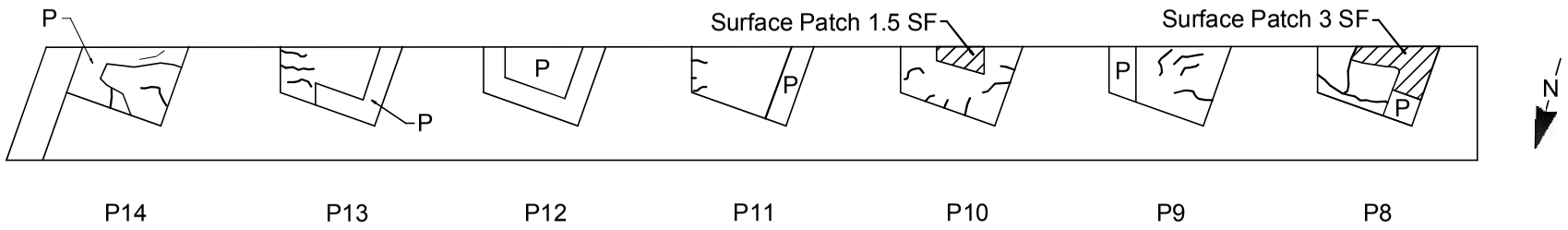

PLAN

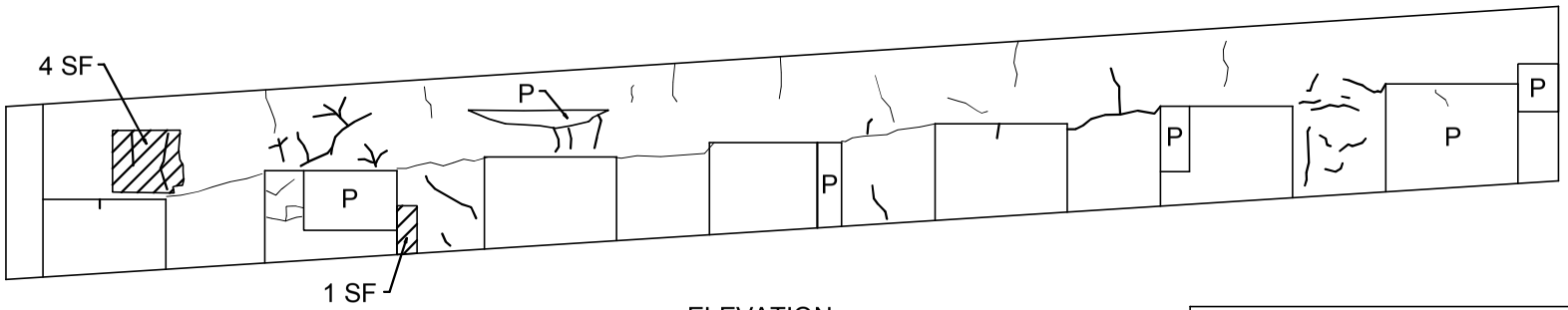

ELEVATION

LEGEND

Hollow Concrete	P	Patch	Spall		
Crack		Hairline Crack			

BIN: 1031559
I-81/ East Castle Street

END ABUTMENT DETERRIORATION SKETCH
LEFT SIDE

NOT TO SCALE

DATE: 03/31/2014

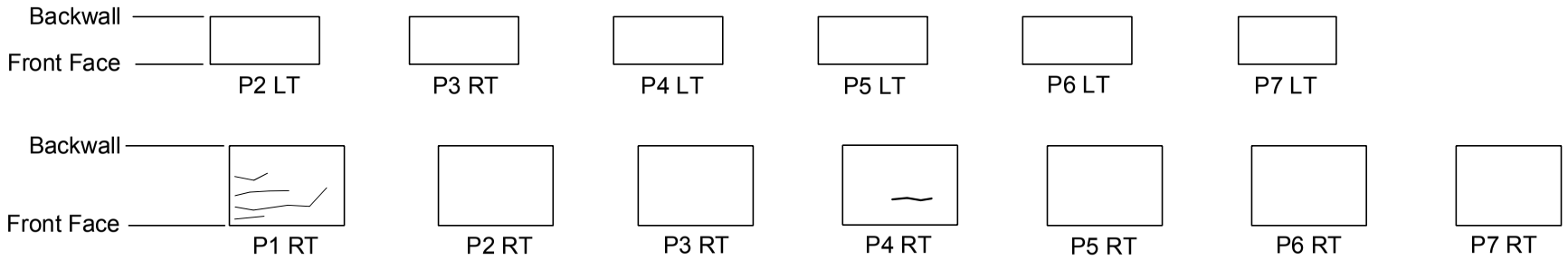

SIDES OF PEDESTAL PROJECTION

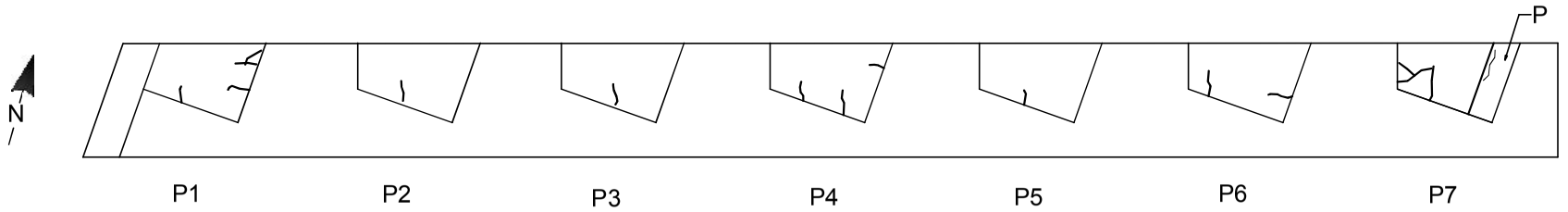

PLAN

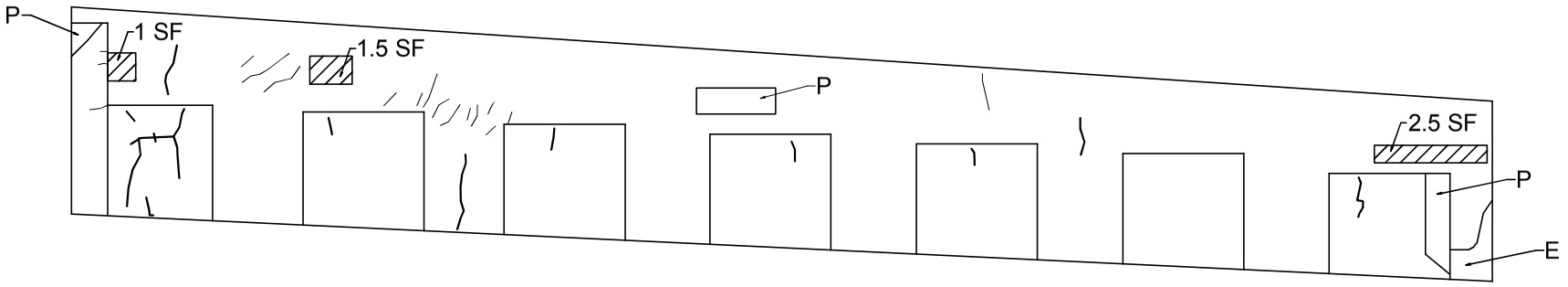

ELEVATION

LEGEND					
Hollow Concrete	P	Patch	Spall		
E	Efflorescence	Crack	Hairline Crack		

BIN: 1031559
I-81/ East Castle Street

END ABUTMENT DETERRIORATION SKETCH
RIGHT SIDE

NOT TO SCALE

DATE: 03/31/2014
SHEET 2 OF 2

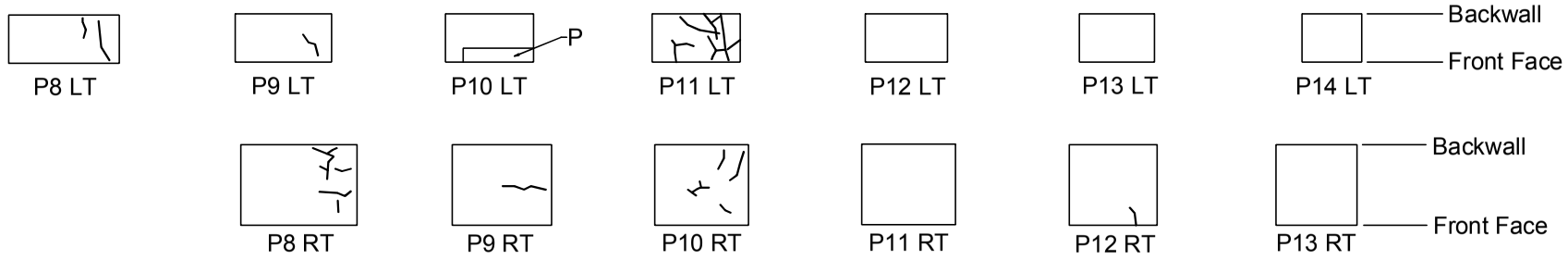

SIDES OF PEDESTAL PROJECTION

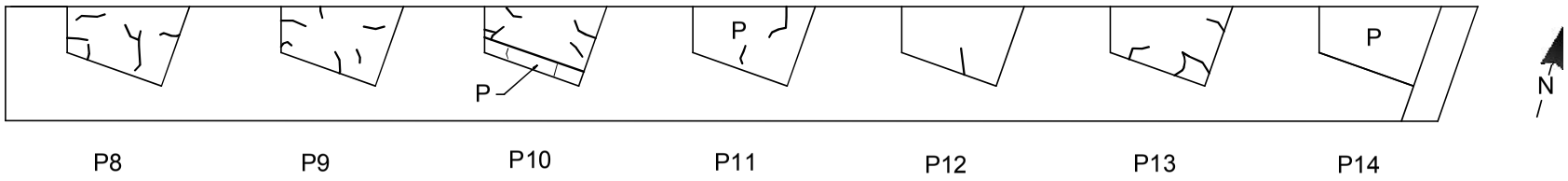

PLAN

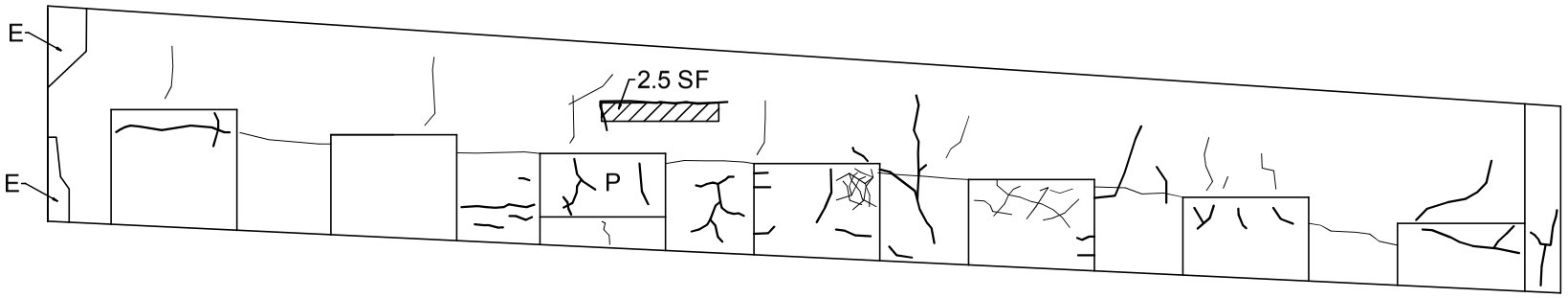

ELEVATION

LEGEND

Hollow Concrete	P	Patch	Spall		
Crack		Hairline Crack			

BIN:1031559
I81 / East Castle Street
Pier 1 of 2

PIER DETERIORATION SKETCH
BEGIN SIDE
NOT TO SCALE

DATE: 03/31/2014
SHEET 1 OF 2

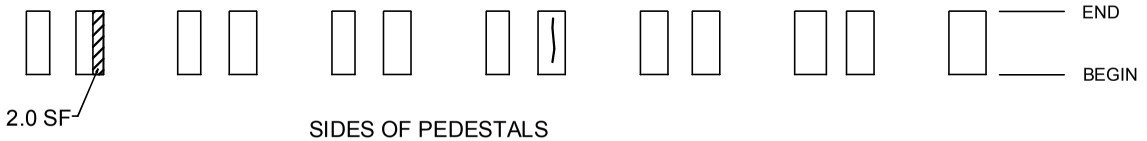

SIDES OF PEDESTALS

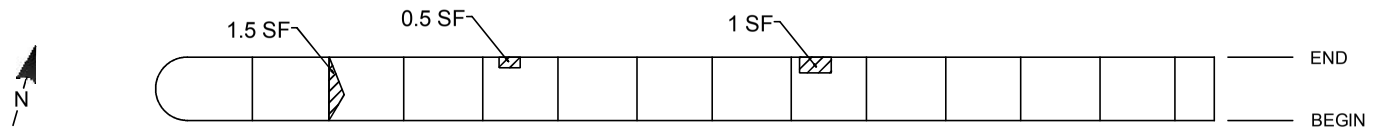

PLAN

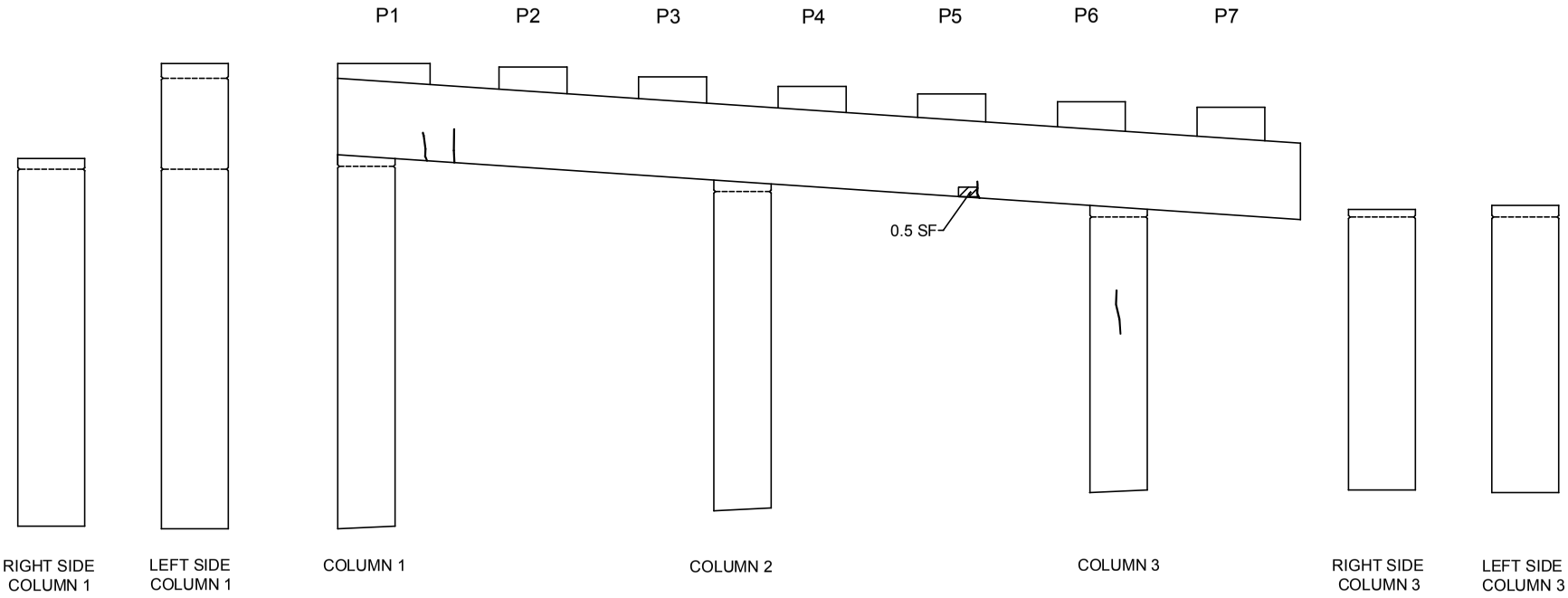

ELEVATION

LEGEND			
Hollow Concrete	Crack	Hairline Crack	

BIN:1031559
I81 / East Castle Street
Pier 1 of 2

PIER DETERIORATION SKETCH
BEGIN SIDE
NOT TO SCALE

DATE: 03/31/2014
SHEET 2 OF 2

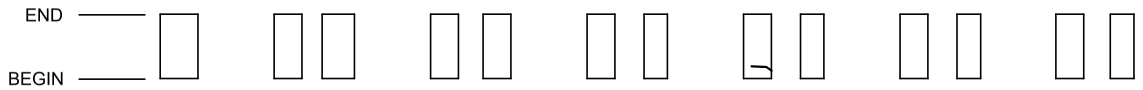

SIDES OF PEDESTALS

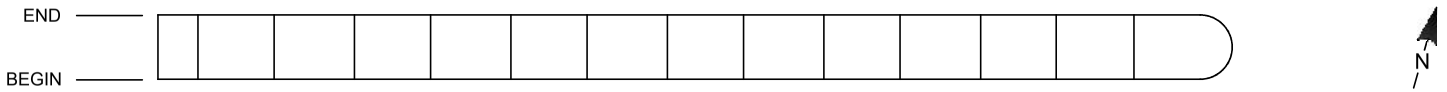

PLAN

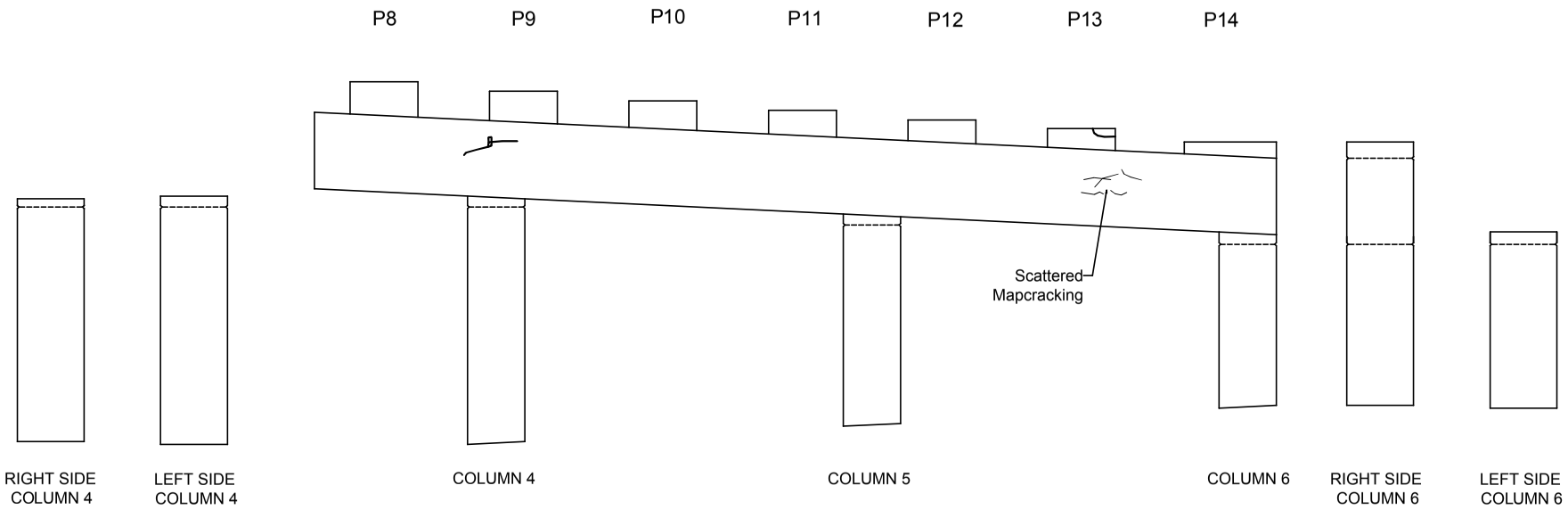

ELEVATION

LEGEND
Crack

BIN:1031559
I81 / East Castle Street
Pier 1 of 2

PIER DETERIORATION SKETCH

END SIDE

NOT TO SCALE

DATE: 03/31/2014
SHEET 1 OF 2

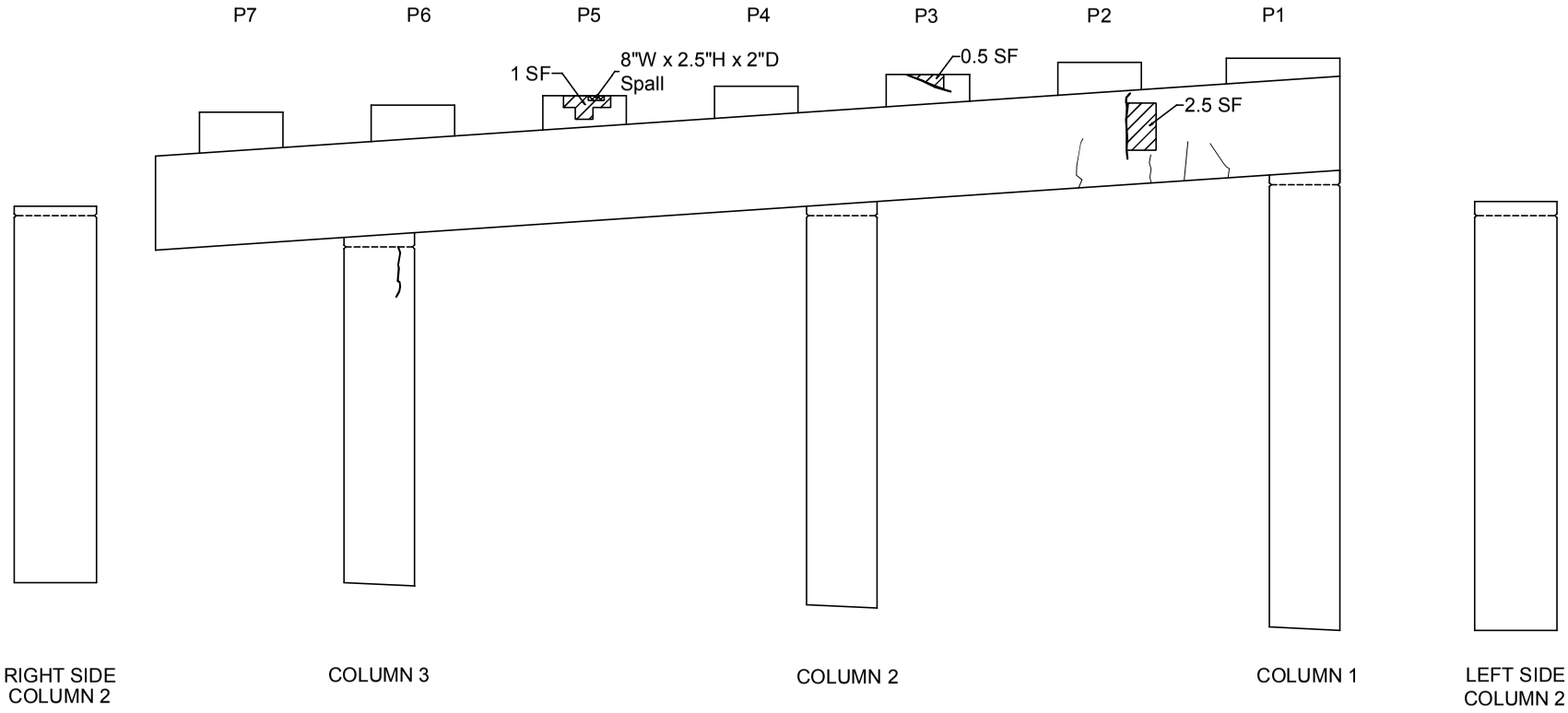

ELEVATION

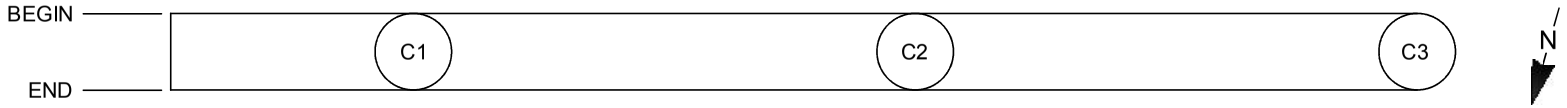

UNDERSIDE OF CAP BEAM

LEGEND	
Hollow Concrete	Spall
Crack	Hairline Crack

BIN:1031559
I81 / East Castle Street
Pier 1 of 2

PIER DETERIORATION SKETCH

END SIDE

NOT TO SCALE

DATE: 03/31/2014
SHEET 2 OF 2

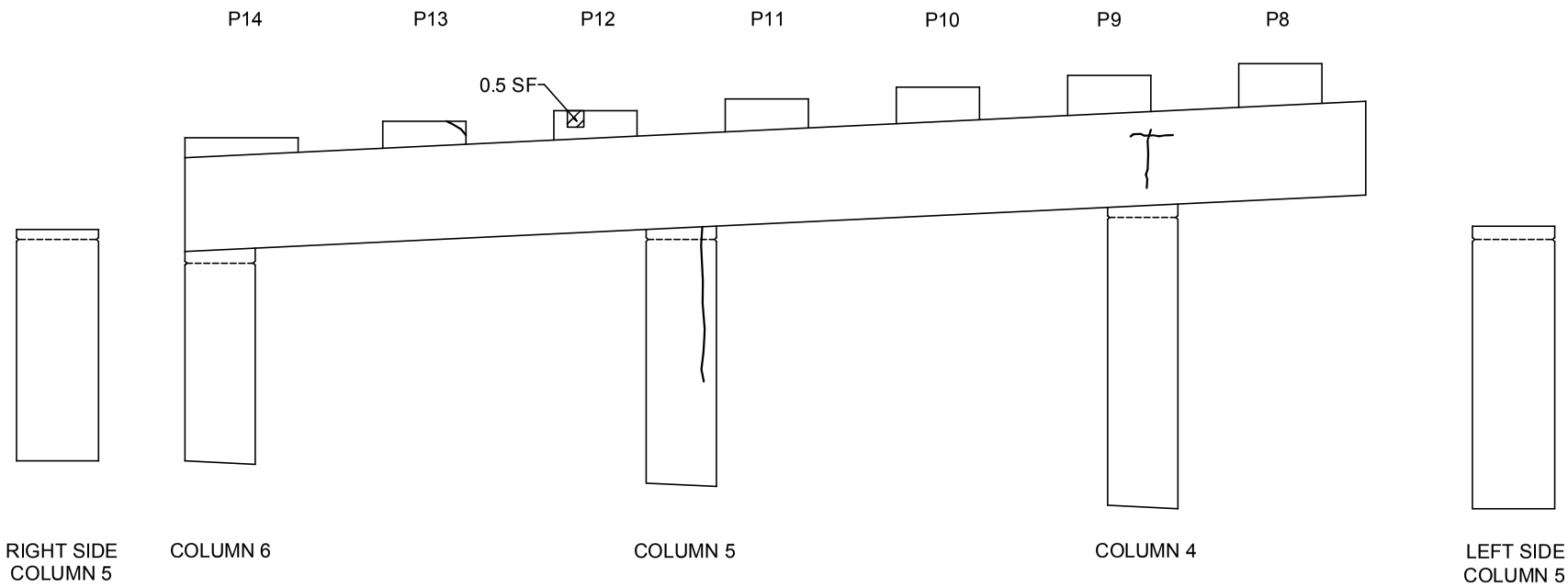

ELEVATION



UNDERSIDE OF CAP BEAM

LEGEND	
	Hollow Concrete
	Crack

BIN:1031559
I81 / East Castle Street
Pier 2 of 2

PIER DETERIORATION SKETCH
BEGIN SIDE
NOT TO SCALE

DATE: 03/31/2014
SHEET 1 OF 2

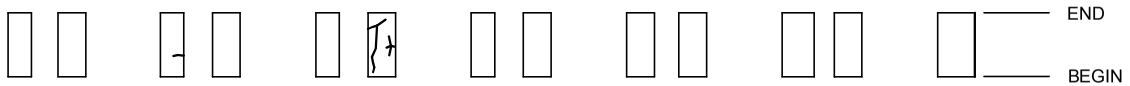

SIDES OF PEDESTALS

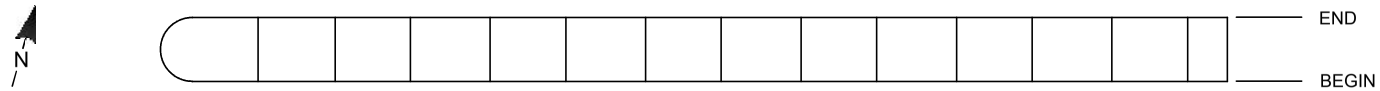

PLAN

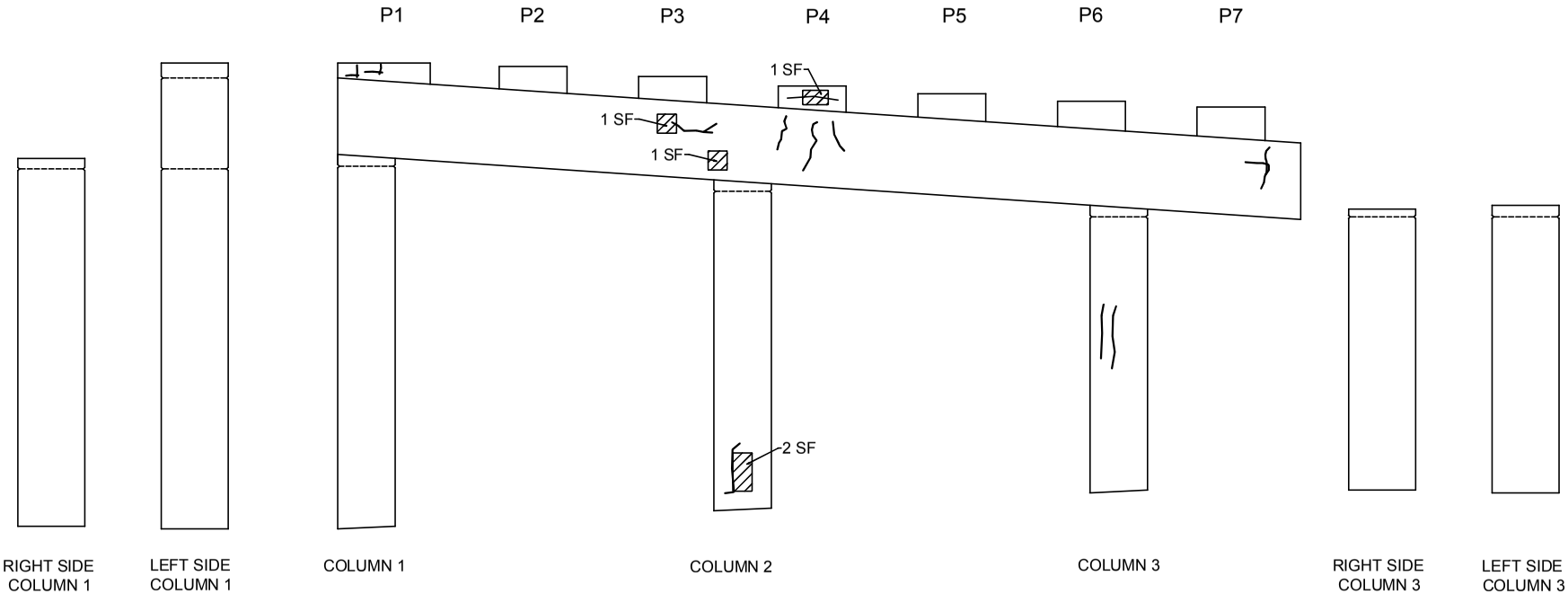

ELEVATION

LEGEND	
Hollow Concrete	Crack

BIN:1031559
I81 / East Castle Street
Pier 2 of 2

PIER DETERIORATION SKETCH
BEGIN SIDE
NOT TO SCALE

DATE: 03/31/2014
SHEET 2 OF 2

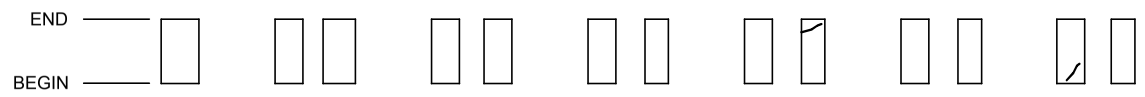

SIDES OF PEDESTALS

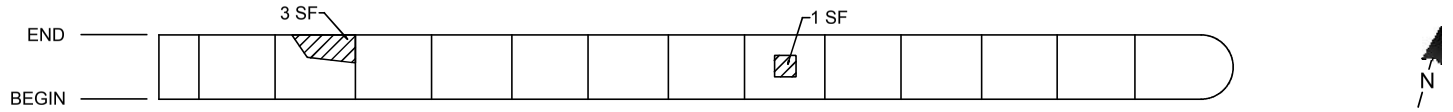

PLAN

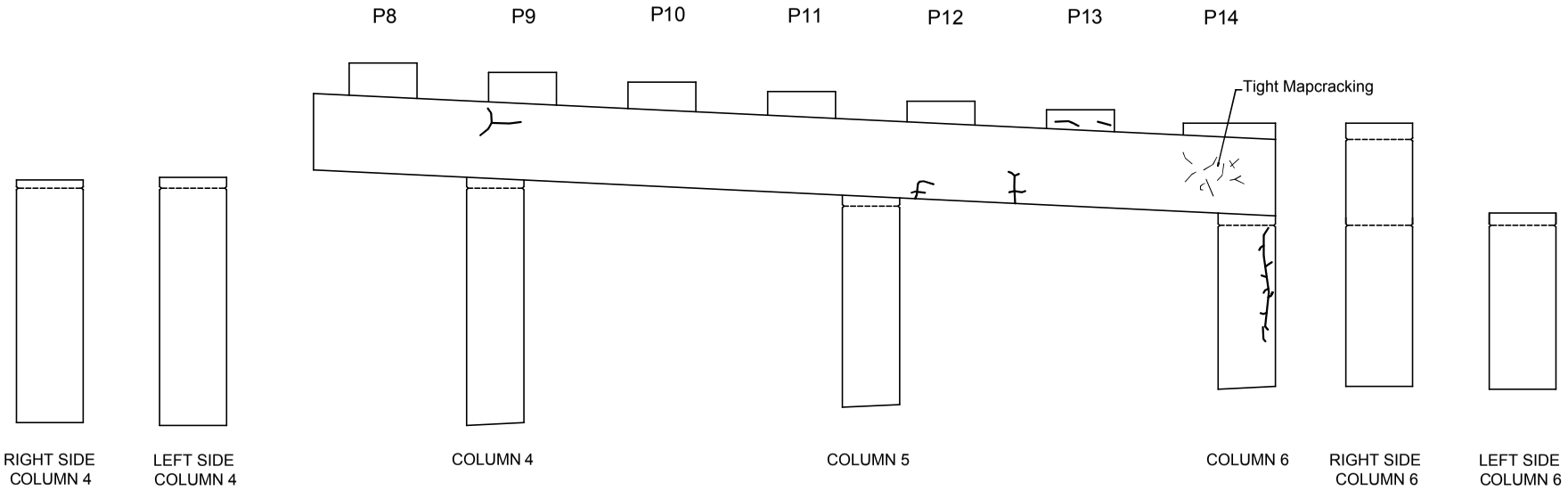

ELEVATION

LEGEND	
Hollow Concrete	Crack

BIN:1031559
I81 / East Castle Street
Pier 2 of 2

PIER DETERIORATION SKETCH

END SIDE

NOT TO SCALE

DATE: 03/31/2014
SHEET 1 OF 2

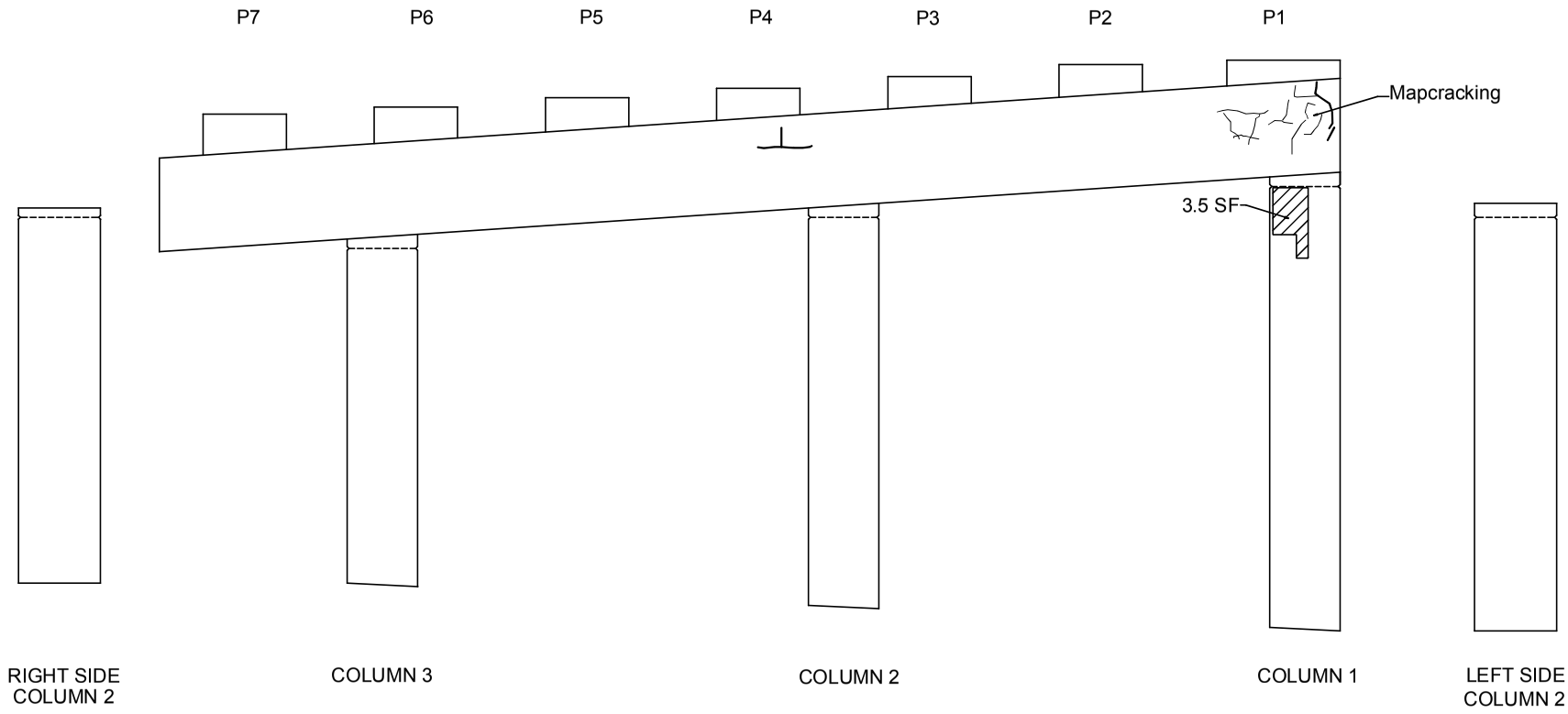

ELEVATION

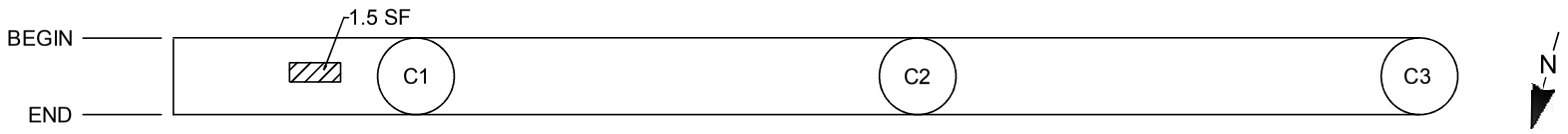

UNDERSIDE OF CAP BEAM

LEGEND		
Hollow Concrete	Crack	Hairline Crack

BIN:1031559
I81 / East Castle Street
Pier 2 of 2

PIER DETERIORATION SKETCH

END SIDE

NOT TO SCALE

DATE: 03/31/2014
SHEET 2 OF 2

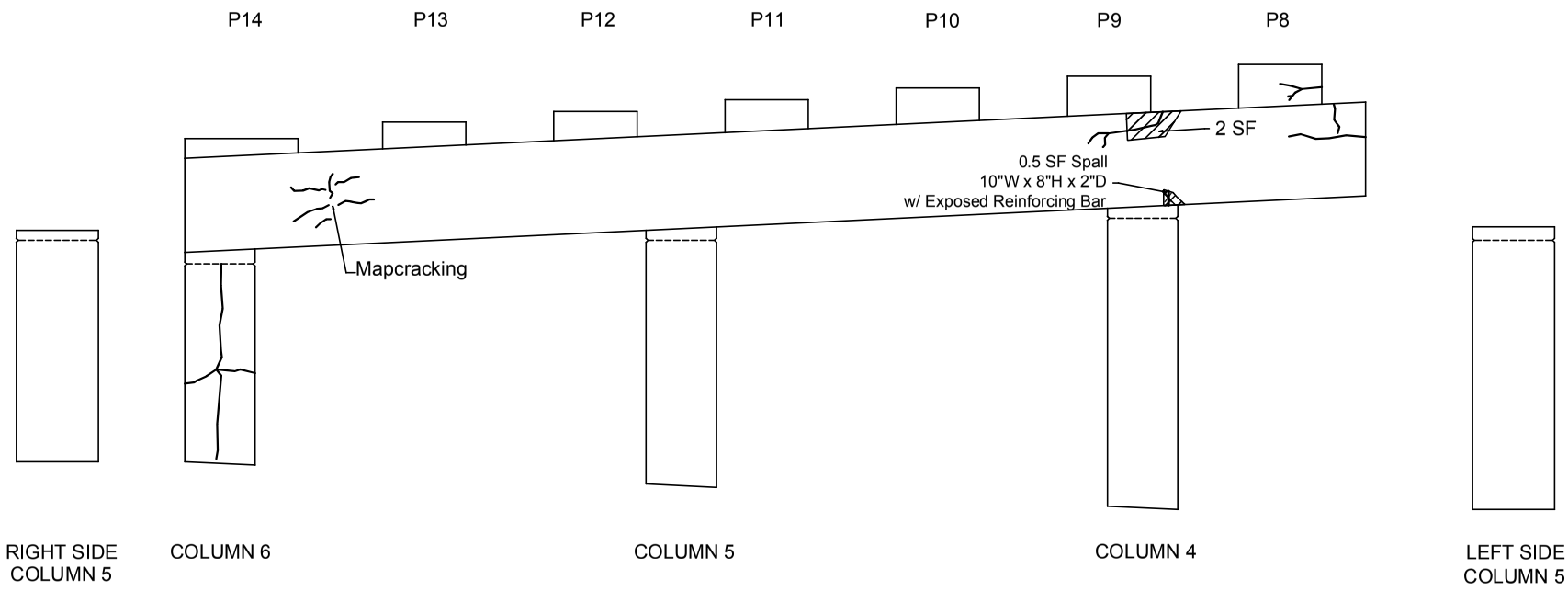

ELEVATION

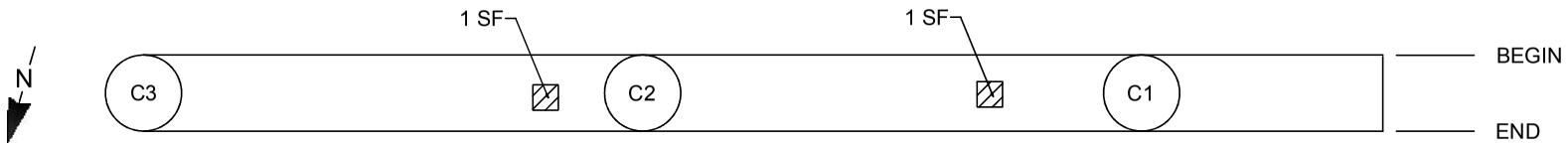

UNDERSIDE OF CAP BEAM

LEGEND	
Hollow Concrete	Crack

IN-DEPTH PHOTO DOCUMENTATION

BIN: 1031559
I81/ East Castle Street

IN-DEPTH INSPECTION
PHOTO LOCATION SKETCH

DATE: 03/31/2014

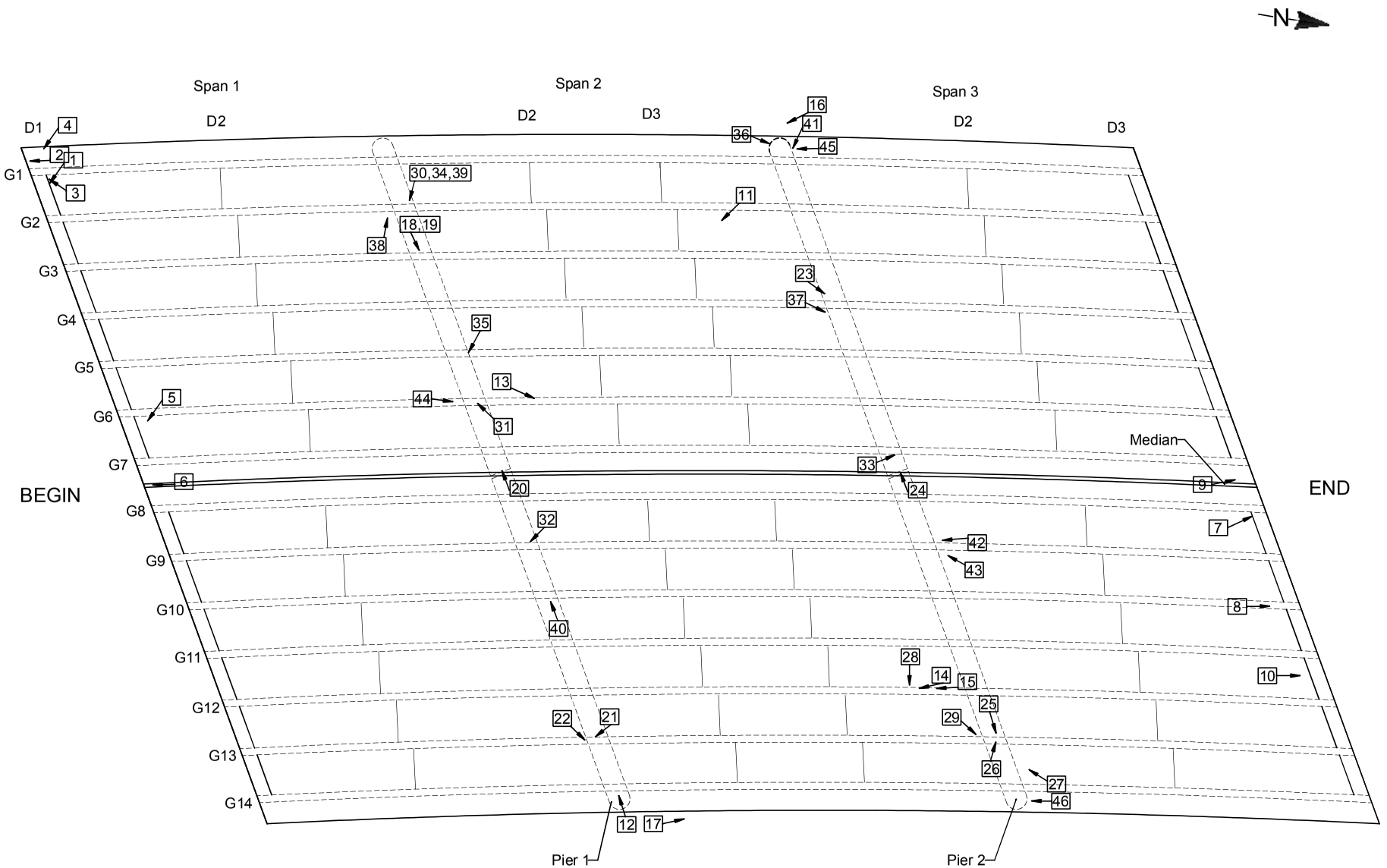

LEGEND

XX → Photo Above Deck

XX → Photo Below Deck



DESCRIPTION: BEGIN ABUTMENT BEARING B2 AND PEDESTAL P2 – LOOKING FROM LEFT TO RIGHT

PHOTO 1



DESCRIPTION: BEGIN ABUTMENT PEDESTAL P1 LEFT SIDE – LOOKING FROM END TO BEGIN

PHOTO 2



DESCRIPTION: BEGIN ABUTMENT PEDESTAL P1 TOP & RIGHT SIDE – LOOKING FROM RIGHT TO LEFT

PHOTO 3



DESCRIPTION: BEGIN ABUTMENT BACKWALL LEFT SIDE – LOOKING FROM END TO BEGIN

PHOTO 4



DESCRIPTION: BEGIN ABUTMENT BACKWALL BAY 6 – LOOKING FROM LEFT TO RIGHT

PHOTO 5



DESCRIPTION: BEGIN ABUTMENT BACKWALL BAY 7

PHOTO 6



DESCRIPTION: END ABUTMENT BEARING B8 RIGHT SIDE – LOOKING FROM RIGHT TO LEFT

PHOTO 7



DESCRIPTION: END ABUTMENT PEDESTAL P10 – LOOKING FROM BEGIN TO END

PHOTO 8



DESCRIPTION: END ABUTMENT BACKWALL BAY 7

PHOTO 9



DESCRIPTION: END ABUTMENT BACKWALL BAY 11 – LOOKING FROM BEGIN TO END

PHOTO 10



DESCRIPTION: SPAN 2 FRAMING – LOOKING FROM END TO BEGIN

PHOTO 11



DESCRIPTION: SPAN 1 GIRDER G14 RIGHT– LOOKING FROM RIGHT TO LEFT

PHOTO 12



DESCRIPTION: SPAN 2 GIRDER G6 BEGIN LEFT UTILITY CONNECTION – LOOKING FROM BEGIN TO END

PHOTO 13



DESCRIPTION: SPAN 2 GIRDER G12 END LEFT UTILITY CONNECTION – LOOKING FROM END TO BEGIN

PHOTO 14



DESCRIPTION: SPAN 2 GIRDER G12 LEFT UTILITY CONNECTION – LOOKING FROM END TO BEGIN

PHOTO 15



DESCRIPTION: SPAN 2 GIRDER G1 LEFT SIDE – LOOKING FROM END TO BEGIN

PHOTO 16



DESCRIPTION: SPAN 2 GIRDER G14 RIGHT SIDE – LOOKING FROM BEGIN TO END

PHOTO 17



DESCRIPTION: SPAN 1 JOINT GIRDER BAY 2 – LOOKING FROM LEFT TO RIGHT

PHOTO 18



DESCRIPTION: PIER 1 PEDESTAL P3 LEFT SIDE – LOOKING FROM LEFT TO RIGHT

PHOTO 19



DESCRIPTION: SPAN 1 JOINT AT MEDIAN BAY 7 LEFT SIDE – LOOKING FROM RIGHT TO LEFT

PHOTO 20



DESCRIPTION: PIER 1 BEARING B13 END LEFT – LOOKING FROM LEFT TO RIGHT

PHOTO 21



DESCRIPTION: PIER1 CAP BEAM BEGIN FACE COLUMN BAY 5 – LOOKING FROM LEFT TO RIGHT

PHOTO 22



DESCRIPTION: PIER 2 PEDESTAL P4 LEFT SIDE – LOOKING FROM LEFT TO RIGHT

PHOTO 23



DESCRIPTION: SPAN 2 JOINT AT MEDIAN BAY 7 LEFT – LOOKING FROM RIGHT TO LEFT

PHOTO 24



DESCRIPTION: SPAN 2 JOINT GIRDER BAY 12 – LOOKING FROM LEFT TO RIGHT

PHOTO 25



DESCRIPTION: PIER 2 BEARING B13 END RIGHT – LOOKING FROM RIGHT TO LEFT

PHOTO 26



DESCRIPTION: PIER 2 CAP BEAM END FACE COLUMN BAY 5 – LOOKING FROM RIGHT TO LEFT

PHOTO 27



DESCRIPTION: SPAN 2 DECK AT GIRDER G12, END LEFT SIDE – LOOKING FROM LEFT TO RIGHT

PHOTO 28



DESCRIPTION: SPAN 2 DECK GIRDER BAY 12 – LOOKING FROM BEGIN TO END

PHOTO 29



DESCRIPTION: PIER 1 BEARING B2 AT END LEFT – LOOKING FROM LEFT TO RIGHT

PHOTO 30



DESCRIPTION: PIER 1 BEARING B6 END RIGHT – LOOKING FROM RIGHT TO LEFT

PHOTO 31



DESCRIPTION: PIER 1 BEARING B9 END LEFT – LOOKING FROM LEFT TO RIGHT

PHOTO 32



DESCRIPTION: PIER 2 BEARING B7 END RIGHT – LOOKING FROM RIGHT TO LEFT

PHOTO 33



DESCRIPTION: PIER 1 PEDESTAL P2 – LEFT SIDE

PHOTO 34



DESCRIPTION: PIER 1 PEDESTAL P5 END – LOOKING FROM LEFT TO RIGHT

PHOTO 35



DESCRIPTION: PIER 2 PEDESTAL P1 BEGIN LEFT – LOOKING FROM BEGIN TO END

PHOTO 36



DESCRIPTION: PIER 2 PEDESTAL P4 BEGIN – LOOKING FROM LEFT TO RIGHT

PHOTO 37



DESCRIPTION: PIER 1 CAP BEAM BEGIN FACE COLUMN BAY 1 – LOOKING FROM RIGHT TO LEFT

PHOTO 38



DESCRIPTION: PIER 1 CAP BEAM END FACE COLUMN BAY 1 – LOOKING FROM LRFT TO RIGHT

PHOTO 39



DESCRIPTION: PIER 1 CAP BEAM COLUMN BAY 4 UNDERSIDE – LOOKING FROM RIGHT TO LEFT

PHOTO 40



DESCRIPTION: PIER 2 CAP BEAM END LEFT AT COLUMN C1 – LOOKING FROM LEFT TO RIGHT

PHOTO 41



DESCRIPTION: PIER 2 CAP BEAM END FACE AT COLUMN C4 – LOOKING FROM END TO BEGIN

PHOTO 42



DESCRIPTION: PIER 2 CAP BEAM END FACE AT PEDESTAL P9 – LOOKING FROM END TO BEGIN

PHOTO 43



DESCRIPTION: PIER 1 COLUMN C3 BEGIN FACE – LOOKING FROM BEGIN TO END

PHOTO 44



DESCRIPTION: PIER 2 COLUMN C1 END FACE – LOOKING FROM END TO BEGIN

PHOTO 45



DESCRIPTION: PIER 2 COLUMN C6 END FACE – LOOKING FROM END TO BEGIN

PHOTO 46

ASBESTOS SAMPLING SURVEY

Asbestos Sampling Survey

Location:
BIN 1-03155-9
Interstate Route 81 over Castle Street

Prepared for:
New York State
Department of Transportation

PIN 3804.00.101

LaBella Project No. 97132

May, 1998

Asbestos Sampling Survey

Location:

16 Bridges,
Onondaga County, New York

Prepared for:

New York State
Department of Transportation

PIN 3804.00.101

LaBella Project No. 97132

May, 1998

LaBella Associates, P.C.
300 State Street
Rochester, NY 14614-1098

Table of Contents

Bridge Identification Number and Description — Tab Number

BIN 1-09367-1
Interstate Route 481South Bound over Kirkville Road 1

BIN 1-09367-2
Interstate Route 481North Bound over Kirkville Road 2

BIN 1-09357-1
Interstate Route 481South Bound over Conrail 3

BIN 1-09357-2
Interstate Route 481North Bound over Conrail 4

BIN 1-05115-9
Interstate Route 690 over Peat Street 4

BIN 1-03155-9
Interstate Route 81 over Castle Street 6

BIN 1-03152-9
Interstate Route 81 over Calthrop Avenue 7

BIN 1-05001-0
West Street-Herald Place Ramp over Onondaga Creek 8

BIN 1-05079-0
West Street South Bound over Interstate Route 690 9

BIN 1-05078-0
West Street North Bound over Interstate Route 690 10

BIN 1-05402-0
Interstate Route 690 West Bound over Clinton Street 11

BIN 1-05085-2
Interstate Route 690 East Bound over Franklin Street 12

Table of Contents (continued)

Bridge Identification Number and Description — Tab Number

BIN 1-05095-A

Interstate Route 690 West Bound Ramp over State Street 13

BIN 1-05092-1

Interstate Route 690 West Bound Ramp to Interstate Route 81 North Bound over Willow Street 14

BIN 1-05092-2

Interstate Route 690 West Bound over Willow Street 15

BIN 1-05100-A

Interstate Route 690 East Bound to Interstate Route 81 South Bound over State Street 16

Table of Contents

Page

I. Project Summary 1

II. Site Description 1

III. Inspection Procedures 1

IV. Results 2

Certification 2

Figures and Table

I. Project Summary

In accordance with conditions of Term Agreement D010010, LaBella Associates, P.C. conducted an asbestos sampling survey of the Interstate Route 81 Bridge over Castle Street. Based on laboratory analyses of bulk samples collected, the following material was determined to contain asbestos:

BIN 1-03155-9 Interstate Route 81 Bridge over Castle Street

Type of Material	Estimated Amount
Caulking Compound	1 Linear Meter

II. Site Description

The Site is located in Onondaga County, New York. For the purpose of this report, the Site consists of the Interstate Route 81 Bridge over Castle Street (See attached FIGURE 1 - Site Location Map).

III. Inspection Procedures

The following procedures were used to obtain the data for this Report:

A. A review of record drawings supplied by Region 3 personnel and a visual inspection of the subject structure were conducted to identify potential visible/accessible sources of asbestos-containing materials. Observations and notes were made to provide a description of the structure, and an estimate of the approximate amount, length, or area of ACM present.

B. Physical or operational constraints which might affect the removal of the ACM were identified and reported.

C. Bulk samples of suspected ACM were collected during the site inspection of the subject structure. Samples were taken from each homogeneous area that may contain ACM.

D. Samples were submitted for analysis. Preliminary PLM analyses of NOB materials were performed by LaBella Laboratories, a NYSDOH approved laboratory, to determine the presence and percentage of asbestos in each sample. TEM analyses of NOB materials, if necessary, were performed by EMSL Analytical, Inc. or New York Testing Laboratories, Inc.

E. Lab results were used to determine the approximate location, type, and amount of the verified ACM.

F. A drawing of the structure at the Site was created, in order to show sample locations and the approximate locations and amounts of confirmed ACM observed in accessible locations.

Only accessible areas were inspected. Inaccessible areas, such as areas within the bridge or the approaches to the bridge were not included in this inspection. No investigation was conducted by LaBella Associates to determine the presence of underground utilities on or in the immediate vicinity of the Site. Actual sample locations are shown in the attached FIGURE 2. Results of bulk sample analyses are tabulated in the attached TABLE.

IV. Results

BIN 1-03155-9 Interstate Route 81 over Castle Street

Caulking Compound

Asbestos-containing caulking compound is located around a few of the guide rail base plates on both parapets on the bridge, and around the base of the light pole on the east parapet. It is estimated that the total amount of this caulking compound is approximately 1 linear meter. This estimate is based on field measurements taken at the time of the site visit.

The approximate locations of this material are shown in the attached FIGURE 2. Analytical results of bulk samples collected are summarized in the attached TABLE.

Certification

LaBella Associates, P.C. certifies the accuracy of this report, to the best of our knowledge, based on the information collected as described in the Inspection Procedures Section of this investigation.

Figures & Table

BIN 1-03155-9

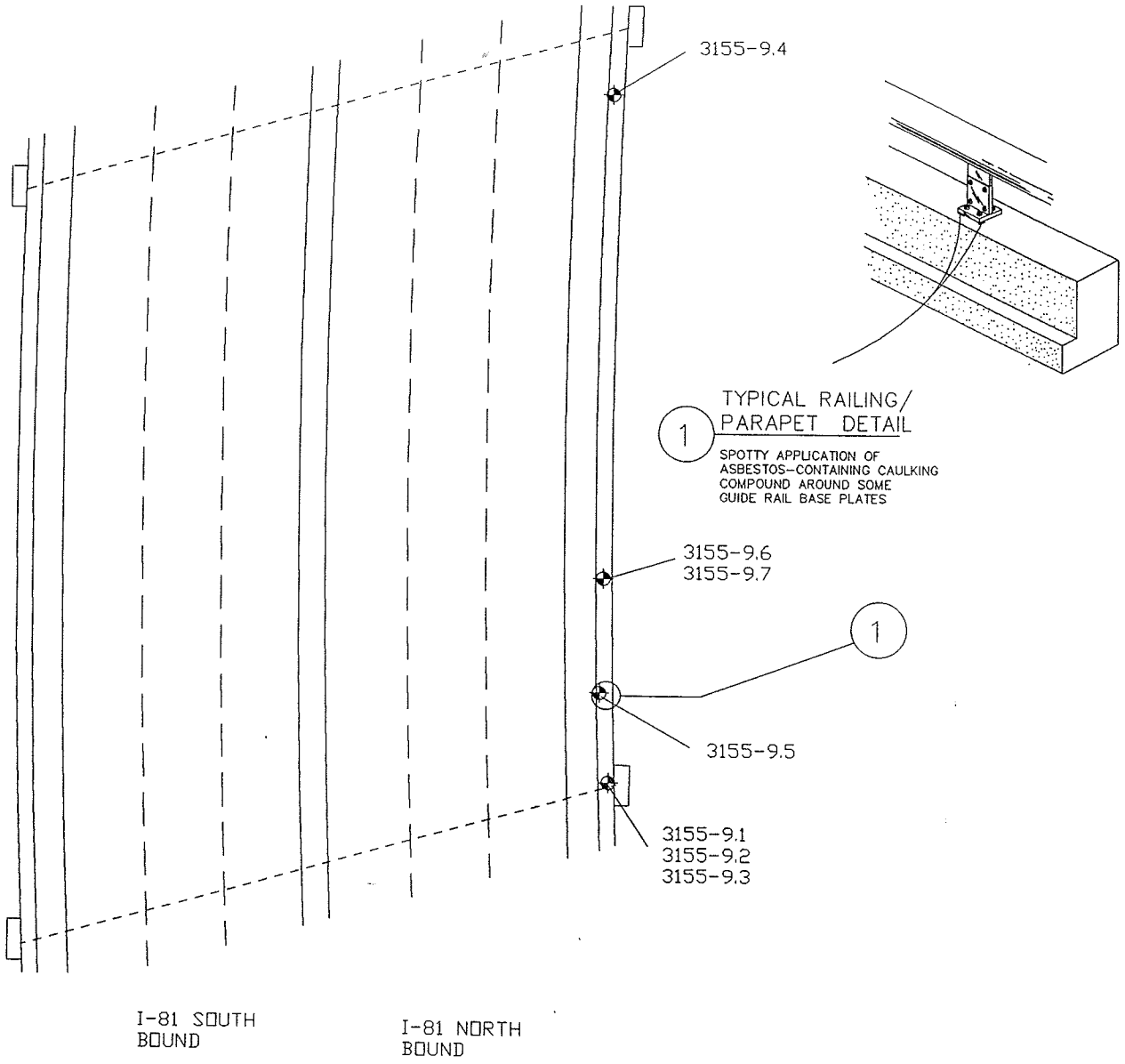

LEGEND

◈ 3155-9.1 SAMPLE LOCATION

NORTH	PROJECT TITLE: ASBESTOS SAMPLING SURVEY 16 BRIDGES, ONONDAGA COUNTY, NEW YORK	PROJECT NO. 97132 PIN 3804.00.101
	FIGURE 2 I-81 OVER CASTLE STREET BIN 1-03155-9 SAMPLE LOCATIONS AND CONFIRMED ACM	NOT TO SCALE DATE: MAY, 1998

Bulk Sample Results Table

Asbestos Sampling Survey
BIN 1-03155-9
Interstate Route 81 Bridge over Castle Street
Onondaga County, New York
LaBella Project # 97132
PIN 3804.00.101

Sample #	Sample Location	Type of Material	Results % Asbestos	Amount of Material	Specification Item No.
3155-9.1	South East Corner of Bridge, Beneath Bearing	Bearing Pad	None Detected	N/A	N/A
3155-9.2	South Side of Bridge on Back Wall	Masonry Coating	None Detected	N/A	N/A
3155-9.3	South Side of Bridge, on West I-Beam	Green Paint	None Detected	N/A	N/A
3155-9.4	North Side of Bridge on East I-Beam	Green Paint	None Detected	N/A	N/A
3155-9.5	**East Parapet, at Base of Guide Rail**	**Caulking Compound**	**10% Chrysotile**	**1 Linear Meter**	**15202.0629 (M)**
3155-9.6	East Parapet, at Expansion Joint	Joint Filler	None Detected	N/A	N/A
3155-9.7	East Parapet, at Expansion Joint	Joint Sealer	None Detected	N/A	N/A

ATHENICA
ENVIRONMENTAL SERVICES INC.
Tel (718) 784-7490
Fax (718) 784-4085

BULK (NOB) ASBESTOS ANALYSIS BY POLARIZED LIGHT MICROSCOPY AND TRANSMISSION ELECTRON MICROSCOPY

CLIENT: NYS DOT # 3
LABORATORY ID #: 05-09-025
DATES OF ANALYSIS: 09/09/05

PROJECT#: Bin # 1031559
ANALYT. METHODOLOGIES: ELAP 198.6, ELAP 198.4
DATE OF REPORT: 09/10/05

LABORATORY RESULTS

CLIENT #	LAB. ID #	LOCATION	%ORG	%ASI	%AII	PLM RESULTS	TYPE OF ASBEST.	TEM RESULTS	TYPE OF ASBEST.	POSIT. / NEGAT.
01	05-09-025-01	Steel Paint Coat, G2, Beg, Span 1, Lt Web, 1.3m from Beg.	33.97	12.48	53.55	**ND**	NA	**ND**	NA	**Negat.**
02	05-09-025-02	Steel Paint Coat, G7, Beg, Span 1, Lt Web, 2.7m from Beg.	38.73	11.27	50.00	**ND**	NA	**ND**	NA	**Negat.**
03	05-09-025-03	Steel Paint Coat, G12, Beg, Span 1, Lt Web, 12.5m from Beg.	42.47	14.61	42.92	**ND**	NA	**Trace**	Anth.	**Negat.**

E. Sioukri

ANALYST
E. Sioukri

LABORATORY DIRECTOR
Spiro Dongaris

LABORATORY CERTIFICATION NUMBERS: NVLAP 101958, ELAP 10955

- Athenica Environmental Services Inc. (AES), is responsible only for information pertaining to samples taken by its employees.
- Samples will be stored for sixty (60) days. AES Inc., should be notified within this time frame for a true duplicate analysis.
- The report relates only to items tested. This report must not be used to claim product endorsement by NVLAP or any other agency of the U.S. Government. Test reports may not be reproduced except in full and with prior approval of AES Inc.
- The liability of Athenica Environmental Services Inc. with respect to the services charged, shall in no event exceed the amount of the invoice.

ATHENICA
ENVIRONMENTAL SERVICES INC.
45-09 GREENPOINT AVENUE
LONG ISLAND CITY, NY 11104
Tel. (718) 784-7490
Fax. (718) 784-4085

CLIENT: NYS DOT / REG. 3
PROJECT NO. (ATHENICA FILE#): C003314
METHOD OF SHIPMENT: U.S. MAIL
SITE: BIN # 1031559
DATE: 09/1/2005
INSPECTOR: Gary W Cook
NUMBER OF SAMPLES: 3
TYPE OF ANALYSIS REQUESTED: [ ] PLM [X] NOB-PLM [X] NOB-TEM [ ] OTHERS
TURNAROUND TIME: [ ] 6 HRS [ ] 12 HRS [ ] 24 HRS [X] OTHER HRS
COMMENTS: ATT: CHRISTOPHER ANDERSON
333 E. WASHINGTON ST. SYRACUSE, N.Y. 13202

HOM. AREA	SAMLPLE #	SAMPLE DESCRIPTION	SAMPLE LOCATION	FIELD COMMENTS	LABORATORY RESULTS		
					PLM	PLM-NOB	TEM-NOB
1031559	01	STEEL PAINT COAT	G2, BEG, SPAN 1, LF	WEB, 1.3m fr Beg			
1031559	02	"	G7, BEG, SPAN 1, LF	WEB, 2.7m fr Beg			
1031559	03	"	G12, BEG, SPAN 1, LF	WEB, 2.5m fr Beg			

TRANSMITTAL OF RESULTS:
[X] STANDARD
[ ] TELEPHONE RESULTS TO
[ ] FAX RESULTS TO

TELEPHONE #: (315) 428-4628
FAX #:

BATCH #: 05-09-025

CHAIN OF CUSTODY RECORD

RELINQUISHED BY:	Gary W Cook	DATE:	09/01/2005	TIME:	11:15AM
RECEIVED BY:		DATE:	9/8/2005	TIME:	
ANALYST:		DATE:	9/9/2005	TIME:	

LABORATORY ACCREDITATION:
NVLAP# 101958 ELAP# 10955

LATEST BIENNIAL INSPECTION REPORT

Inspection Date: 9/17/2013 RC: 33 BIN: 1031559

Bridge Ratings

Carried: 81I 81I33032033 Crossed: EAST CASTLE ST CheckValue: 1,822,265,089

Inspection Agency: 10 - NYSDOT Type of Inspection: 1 - BIENNIAL
GTMS: 302 -- Steel - Stringer/Multi-Beam or Girder
POSTINGS: See Gen Rec Page 1 for Postings at time of inspection.
Further Investigation Needed: No
State Highway Number: 64-7 Milepoint: 18.34 AADT/Yr: 75200 / 2004
Orientation: 1 - North Political Unit: 2055 - City of SYRACUSE Year Built: 1965
Total Spans: 3 Ramp Bridge Attached To Span: NA BIN: NA
General Recommendation: 6 Computed Condition Rating: 5.254

Abutment Ratings:	Beg Abut	End Abut
Joint with Deck	7	7
Bearings, Bolts, Pads	5	5
Seats and Pedestals	5	5
Backwall	5	5
Stem (Breastwall)	8	8
Erosion or Scour	5	6
Footings	9	9
Piles	8	8
Recommendation	5	5

Wingwall Ratings:	Beg Abut	End Abut
Walls	5	5
Footings	9	9
Erosion or Scour	6	6
Piles	8	8

Channel Ratings:	Channel
Stream Alignment	8
Erosion and Scour	8
Waterway Opening	8
Bank Protection	8

Approach Ratings:	Approaches
Drainage	5
Embankment	6
Settlement	7
Erosion	5
Pavement	7
Guide Railing	5

Number of Flags Issued:

RED: 1 Yellow: 0 Safety: 1

Vulnerability Reviews Recommended: 1=Yes, 2=No, 3=NA, X=NotActive

Hydraulic: 3	Overload: X	Steel: 2
Collision: 2	Concrete: X	Seismic: X

Inspector's Signature: CheckValue: 1,822,265,089 Date: 9/17/2013

Dennis Conley,PE () (Inspector ID:3000063)

Signed copy of this inspection report is available in the appropriate NYSDOT Regional Office

Reviewed By: Date: 10/16/2013

James R. Manning,PE () (QC ID:3000023)

Signed copy of this inspection report is available in the appropriate NYSDOT Regional Office

Inspection Date: 9/17/2013 RC: 33 BIN: 1031559

Span Ratings

Carried: 81I 81I33032033 Crossed: EAST CASTLE ST CheckValue: 1,822,265,089

Deck Element Ratings:	001	002	003
Wearing Surface	7	7	7
Curbs	8	8	8
Sidewalks, Fascias	7	7	7
Railings, Parapets	7	7	7
Scuppers	8	8	8
Gratings	8	8	8
Median	7	7	7
Mono Deck Surface	8	8	8

Superstructure Ratings:	001	002	003
Structural Deck	7	7	7
Primary Members	3	5	5
Secondary Members	5	5	5
Paint	6	6	6
Joints	7	7	8
Recommendation	4	6	6

Pier Ratings:	001	002	003
Bearings, Bolts, Pads	5	5	8
Pedestals	5	5	8
Top of Cap or Beam	5	5	8
Stem Solid Pier	8	8	8
Cap Beam	5	5	8
Pier Columns	5	5	8
Footings	9	9	8
Erosion or Scour	6	6	8
Piles	9	9	8
Recommendation	5	5	8

Utility Ratings:	001	002	003
Lighting	8	8	8
Sign Structure	7	1	7
Utilities and Support	7	7	7

Field Notes:

Field Date	Arrival	Departure	Temp (C)	Temp (F)	Weather Conditions
9/16/2013	1:00:00 PM	3:00:00 PM		68	light rain
9/17/2013	3:30:00 PM	5:30:00 PM		72	sunny

Inspection Date: 9/17/2013 RC: 33 BIN: 1031559

Inspection Notes

Carried: 81I 81I33032033 Crossed: EAST CASTLE ST CheckValue: 1,822,265,089

Note ID: 311310315590000

General Note for Bridge
Referenced Photos:
2013 - 100% hands-on inspection was perfored on 09/16/2013 as required.

Note ID: 311310315590001

Beg Abut -- Abutment: Joint with Deck -- Rated 7, Was 5
Approaches: Settlement -- Rated 7, Was 5
Approaches: Pavement -- Rated 7, Was 4
End Abut -- Abutment: Joint with Deck -- Rated 7, Was 5
Referenced Photos: "1"
2013 - Contract work has repaired component.

Note ID: 311310315590004

Span 001 -- Deck Elements: Wearing Surface -- Rated 7, Was 5
Span 001 -- Deck Elements: Sidewalks, Fascias -- Rated 7, Was 3
Span 001 -- Deck Elements: Railings, Parapets -- Rated 7, Was 5
Span 001 -- Deck Elements: Median -- Rated 7, Was 5
Span 001 -- Superstructure: Structural Deck -- Rated 7, Was 4
Span 001 -- Superstructure: Paint -- Rated 6, Was 2
Span 001 -- Superstructure: Joints -- Rated 7, Was 5
Span 001 -- Utilities: Sign Structure -- Rated 7, Was 8
Span 002 -- Deck Elements: Wearing Surface -- Rated 7, Was 5
Span 002 -- Deck Elements: Sidewalks, Fascias -- Rated 7, Was 3
Span 002 -- Deck Elements: Railings, Parapets -- Rated 7, Was 5
Span 002 -- Deck Elements: Median -- Rated 7, Was 5
Span 002 -- Superstructure: Structural Deck -- Rated 7, Was 4
Span 002 -- Superstructure: Paint -- Rated 6, Was 5
Span 002 -- Superstructure: Joints -- Rated 7, Was 5
Span 003 -- Deck Elements: Wearing Surface -- Rated 7, Was 5
Span 003 -- Deck Elements: Sidewalks, Fascias -- Rated 7, Was 3
Span 003 -- Deck Elements: Railings, Parapets -- Rated 7, Was 3
Span 003 -- Deck Elements: Median -- Rated 7, Was 5
Span 003 -- Superstructure: Structural Deck -- Rated 7, Was 4
Span 003 -- Superstructure: Paint -- Rated 6, Was 3
Span 003 -- Utilities: Sign Structure -- Rated 7, Was 8
Referenced Photos: "1", "3"
2013 - Contract work has repaired this component.

Note ID: 311310315590002

Span 001 -- Deck Elements: Curbs -- Rated 8, Was 6
Span 001 -- Deck Elements: Mono Deck Surface -- Rated 8, Was 5
Span 002 -- Deck Elements: Curbs -- Rated 8, Was 6
Span 002 -- Deck Elements: Mono Deck Surface -- Rated 8, Was 5
Span 003 -- Deck Elements: Curbs -- Rated 8, Was 6
Span 003 -- Deck Elements: Mono Deck Surface -- Rated 8, Was 5
Referenced Photos: "1"

Inspection Notes

Carried: 81I 81I33032033 Crossed: EAST CASTLE ST CheckValue: 1,822,265,089

Note ID: 311310315590002 - continued

2013 - Contract work replaced mono deck with precast deck panels.

Note ID: 311310315590008

Span 001 -- Deck Elements: Curbs -- Rated 8, Was 6
Referenced Photos: "1"

Note ID: 311310315590003

Span 001 -- Superstructure: Primary Members -- Rated 3, Was 4
Referenced Photos: "2", "3", "4"
2013 - End Span 1, G14 web is buckled at bottom flange over the bearing. The buckle is 2in high by 8in long and is 3/4" out of plain with 50% section loss.

Also, at the same location, the Left bearing stiffener connection to the bottom flange has 100% section loss, 1in high for the full witdh of the stiffener.

Note ID: 311310315590005

Span 001 -- Utilities: Utilities and Support -- Rated 7, Was 8
Span 002 -- Utilities: Utilities and Support -- Rated 7, Was 8
Span 003 -- Utilities: Utilities and Support -- Rated 7, Was 8
Referenced Photos: "6"
2013 - Contract work mounted conduit to Left fascia.

Note ID: 311310315590007

Span 002 -- Utilities: Lighting -- Rated 8, Was 7
Referenced Photos:
2013 - maintenance work has removed underdeck lighting.

Note ID: 311310315590006

Span 002 -- Utilities: Sign Structure -- Rated 1, Was 6
Referenced Photos: "5"
2013 - the existing Low Clearance sign scheme on Martin Luther King East (MLK) for both approaches is incorrect. The East bound MLK approach is missing the bridge mounted regulatory sign (NYR5-6, see Section 2B.108 on page 45 of MUTCD NYS Supplement). The Westbound MLK is missing the ground mounted warning sign(s) (W12-2, see Section 2C.27 on page 54 of MUTCD NYS Supplement) and the regulatory sign is not mounted in the correct location.

Inspection Date: 9/17/2013 RC: 33 BIN: 1031559

Inspection Photos in Photo Number Order

Carried: 81I 81I33032033 Crossed: EAST CASTLE ST CheckValue: 1,822,265,089

New Joints,Pavement, Deck Signs and Barriers, looking from end to beging



Photo Number: 1 Photo Filename: 13NewSuper.jpg

PM, End Span 1 Girder 14, looking from left to right



Photo Number: 2 Photo Filename: 13PmSp1EndBay13

Inspection Date: 9/17/2013 RC: 33 BIN: 1031559

Inspection Photos in Photo Number Order

Carried: 81I 81I33032033 Crossed: EAST CASTLE ST CheckValue: 1,822,265,089

PM and New Paint, End Span 1 Girder 14, looking from end to begin



Photo Number: 3 Photo Filename: 13PmSp1G14End.jp

PM, End Span 1 Girder 14, looking from end to begin



Photo Number: 4 Photo Filename: 13PmSp1G14End2.j

Inspection Date: 9/17/2013 RC: 33 BIN: 1031559

Inspection Photos in Photo Number Order

Carried: 81I 81I33032033 Crossed: EAST CASTLE ST CheckValue: 1,822,265,089

Left of BridgeMissing Black on White Regulatory Sign, looking from left to right

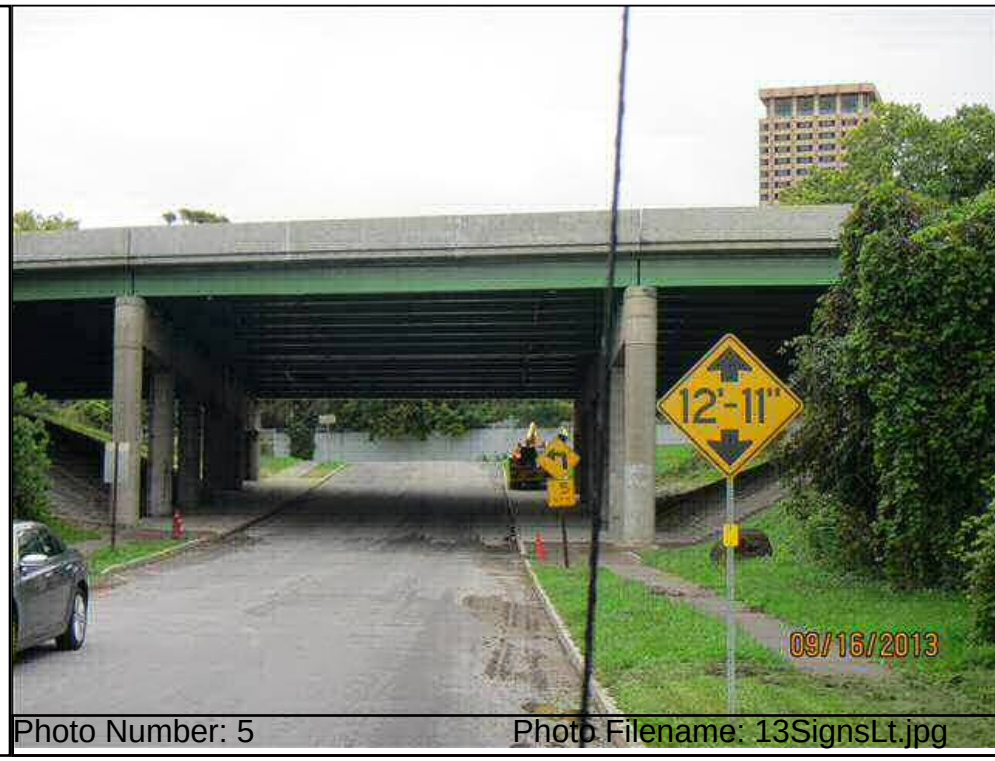

Photo Number: 5 Photo Filename: 13SignsLt.jpg

New Utility on Left Fascia, looking from begin to end



Photo Number: 6 Photo Filename: 13UtilLt.jpg

Inspection Date: 9/17/2013 RC: 33 BIN: 1031559

Inspection Sketches in Sketch SysID Order

Carried: 81I 81I33032033 Crossed: EAST CASTLE ST CheckValue: 1,822,265,089

Sketch ID: 311310315590000 Sketch Filename: LdRatNCL.13

Beg Abut -- Abutment: Joint with Deck -- Rated 7, Was 5
Referenced Photos: "1"

Region 3 LoadRatingFieldCheckForm

NYSDOT BRIDGE INSPECTION REPORT			
SHEET	1	OF	1

LOAD RATING FIELD CHECK FORM

BIN:	1031559	Insp. Date:	09/16/2013

Dead Load - Note Changes since Last load Rating or state "NONE":

BIN was rehabilitated under contract 262116. New precast deck panels with concrete parapets and median barrier.

Section Loss -Note Changes since Last load Rating or state "NONE":

2013 - End Span 1, G14 web is buckled at bottom flange over the bearing. The buckle is 2in high by 8in long and is 3/4" out of plain with 50% section loss.

Also, at the same location, the Left bearing stiffener connection to the bottom flange has 100% section loss, 1in high for the full witdh of the stiffener.

Additional Notes:

NONE

Attachments:

Team Leader: Dennis Conley

Inspection Date: 9/17/2013 RC: 33 BIN: 1031559

Inspection Sketches in Sketch SysID Order

Carried: 81I 81I33032033 Crossed: EAST CASTLE ST CheckValue: 1,822,265,089

Sketch ID: 311310315590001 Sketch Filename: LdRatNCL.13

General Sketch for Bridge
Referenced Photos:

Load rating.

Region 3 LoadRatingFieldCheckForm

NYSDOT BRIDGE INSPECTION REPORT			
SHEET	1	OF	1

LOAD RATING FIELD CHECK FORM

BIN:	1031559	Insp. Date:	09/16/2013

Dead Load - Note Changes since Last load Rating or state "NONE":

BIN was rehabilitated under contract 262116. New precast deck panels with concrete parapets and median barrier.

Section Loss -Note Changes since Last load Rating or state "NONE":

2013 - End Span 1, G14 web is buckled at bottom flange over the bearing. The buckle is 2in high by 8in long and is 3/4" out of plain with 50% section loss.

Also, at the same location, the Left bearing stiffener connection to the bottom flange has 100% section loss, 1in high for the full witdh of the stiffener.

Additional Notes:

NONE

Attachments:

Team Leader: Dennis Conley

Inspection Date: 9/17/2013 RC: 33 BIN: 1031559

Gen. Rec., Postings, Federal Ratings, etc.

Carried: 81I 81I33032033 Crossed: EAST CASTLE ST CheckValue: 1,822,265,089

Overall Condition:

GENERAL RECOMMENDATION: 6

Computed Condition Rating: 5.254

Problems Requiring Action:

NO Further Investigation Needed

RED Flag(s) Issued

POSTINGS:

Inspector Confirmed existing Posting data as correct.
Posted Vertical Clearance ON the bridge is: No Posting
Posted Vertical Clearance UNDER the bridge is: 12 Ft 11 In
No Load Restriction is posted on this bridge

Overloads Observed:

NO Overload Vehicles were observed on this bridge

FEDERAL RATINGS:

NBI Deck Condition: 9
NBI Superstruct Condition: 6
NBI Substruct Condition: 7
NBI Channel Condition: N
NBI Culvert Condition: N

Diving Inspection Needs:

Diving Inspection Required? No Date of Last Diving Inspection: No Date

Inventory Problems:

Inventory Problems Exist? No

Miscellaneous:

Time Required to Inspect Bridge: 4 Hours

Lane Closure Needs: By Contract for 2 Hours

No Railroad Flagging Required

No Pedestrian Fence

There is a Snow Fence present

The BIN Plate is in OK condition

Inspection Date: 9/17/2013 RC: 33 BIN: 1031559

Gen. Rec., Postings, Federal Ratings, etc.

Carried: 81I 81I33032033 Crossed: EAST CASTLE ST CheckValue: 1,822,265,089

Special Emphasis Inspection Required:

Non-Redundant/Fracture Critical Members - No
Pin and Hangers - No
Fatigue-Prone Welds - Yes
Non-Categorized Fatigue-Prone Details - No
Other (Specified in Text) - Yes

Special Emphasis Details:

Cover plates, utlility support member welds.

Concrete haunch detail.

General Notes To the Next Inspector:

BIN was rehabilitated under Contract D262116. Note that the parapets on the precast deck panels are misaligned by up to 1".

Improvements Observed:

Inspection Date: 9/17/2013 RC: 33 BIN: 1031559

Review Progress and Personnel Present at Inspection

Carried: 81I 81I33032033 Crossed: EAST CASTLE ST CheckValue: 1,822,265,089

Inspection Submission Status:

Submitted to QC Engineer on: 9/18/2013
QC Submission Number: 153313

QC Review Completed: 10/16/2013
QC Engineer: James R. Manning

Submitted to Liaison Engineer on: 10/24/2013
Liaison Submission Number: 53345

Liaison Review Completed: 11/22/2013
Liaison Engineer: TODD M. HERMANN

Submitted for BIIS Processing on: 11/22/2013
BIIS Submission Number: .kp1

Current Status: Keypunched, Sent to BIIS
Check Value: 1,822,265,089

Personnel Present During Inspection:

Dennis Conley - Team Leader
Steve Grabosky - Assistant Team Leader
B. Buckland - WZTC
A. Norland - WZTC
D. Ruducy - WZTC

Discovery Date: 9/16/2013 **RC: 33 BIN: 1031559**

RED Flag 31130048

Carried: 81I 81I33032033 Crossed: EAST CASTLE ST

Prompt Interim Action Recommended: No

Inspector: Conley, Dennis
Date Discovered: 9/16/2013
Flag Number: 31130048
Supersedes Flag Number: _____

Bridge Description:
BIN: 1031559 Carried: 81I 81I33032033 Crossed: EAST CASTLE ST

Region: 3 - Syracuse County: 3 - Onondaga
Political Unit: 2055 - City of SYRACUSE
Residency Code: - N/A
Primary Owner: 10 - State Department of Transportation
Secondary Owner: 99 - One Agency - Listed in first subfield
Primary Maintenance: 10 - State - Highway Maintenance
Secondary Maintenance: 99 - One Agency - Listed in first subfield
Year Built: 1965 Not Posted For Load

Number of Spans by Type:

Num	Type	Description
003	109	Steel - Rolled Beam, Multi-Girder

Bridge is wholly or partially owned or maintained by NYSDOT.

Description of Flagged Condition:
Orientation: North
Span# 1
Component: TP350[28] Primary Member.
Rated: 3

2013 - End Span 1, G14 web is buckled at bottom flange over the bearing. The buckle is 2in high by 8in long and is 3/4" out of plain with 50% section loss.

Also, at the same location, the Left bearing stiffener connection to the bottom flange has 100% section loss, 1in high for the full witdh of the stiffener.

3 Photos/Sketches Attached

Verbal Notifications: (For RED Flags and Safety Flags with PIA only)

To: Jim Manning of Regional Office on 9/16/2013 at 1:30:00 AM

Signature: (a signed copy of this report will be placed in the BIN folder)
Flagged Bridge Report Completed By: Conley, Dennis on 9/16/2013
Flagged Bridge Report Signed By: _____ on _____
Conley, Dennis

(This PDF Report Created: 12/3/2013 6:54:29 PM)

Discovery Date: 9/16/2013 **RC: 33 BIN: 1031559**

RED Flag 31130048 Attachment

Carried: 81I 81I33032033 Crossed: EAST CASTLE ST

13G14EndSp1Stiff.jpg - Attached to RED Flag 31130048

End of Span 1 Girder 14 Bearing Stiffener, looking from rend to begin



Discovery Date: 9/16/2013 **RC: 33 BIN: 1031559**

RED Flag 31130048 Attachment

Carried: 81I 81I33032033 Crossed: EAST CASTLE ST

13PmSp1G14End.jpg - Attached to RED Flag 31130048

End of Span 1 Girder 14, looking from right to left



Discovery Date: 9/16/2013 **RC: 33 BIN: 1031559**

RED Flag 31130048 Attachment

Carried: 81I 81I33032033 Crossed: EAST CASTLE ST

13PmSp1G14End2.jpg - Attached to RED Flag 31130048

End of Span 1 Girder 14, looking from end to begin



Discovery Date: 9/17/2013 RC: 33 BIN: 1031559

Safety Flag 31130049

Carried: 81I 81I33032033 Crossed: EAST CASTLE ST

Prompt Interim Action Recommended: No

Inspector: Conley, Dennis
Date Discovered: 9/17/2013
Flag Number: 31130049
Supersedes Flag Number: _____

Bridge Description:
BIN: 1031559 Carried: 81I 81I33032033 Crossed: EAST CASTLE ST

Region: 3 - Syracuse County: 3 - Onondaga
Political Unit: 2055 - City of SYRACUSE
Residency Code: - N/A
Primary Owner: 10 - State Department of Transportation
Secondary Owner: 99 - One Agency - Listed in first subfield
Primary Maintenance: 10 - State - Highway Maintenance
Secondary Maintenance: 99 - One Agency - Listed in first subfield
Year Built: 1965 Not Posted For Load

Number of Spans by Type:

Num	Type	Description
003	109	Steel - Rolled Beam, Multi-Girder

Bridge is wholly or partially owned or maintained by NYSDOT.

Description of Flagged Condition:
Orientation: North
Component: TP350[44] Sign structure.
Rated: 1

2013 - the existing Low Clearance sign scheme on Martin Luther King East (MLK) for both approaches is incorrect. The East bound MLK approach is missing the bridge mounted regulatory sign (NYR5-6, see Section 2B.108 on page 45 of MUTCD NYS Supplement). The Westbound MLK is missing the ground mounted warning sign(s) (W12-2, see Section 2C.27 on page 54 of MUTCD NYS Supplement) and the regulatory sign is not mounted in the correct location.

1 Photos/Sketches Attached

Verbal Notifications: (For RED Flags and Safety Flags with PIA only)

To: _____ of Regional Office on _____ at _____

Signature: (a signed copy of this report will be placed in the BIN folder)
Flagged Bridge Report Completed By: Conley, Dennis on 9/17/2013
Flagged Bridge Report Signed By: _____ on _____
Conley, Dennis

(This PDF Report Created: 12/3/2013 6:54:29 PM)

Discovery Date: 9/17/2013 **RC: 33 BIN: 1031559**

Safety Flag 31130049 Attachment

Carried: 81I 81I33032033 Crossed: EAST CASTLE ST

13SignsLt.jpg - Attached to Safety Flag 31130049

Sign on left side of bridge is missing



Inspection Date: 9/17/2013 RC: 33 BIN: 1031559

Inspection Access Requirements

Carried: 81I 81I33032033 Crossed: EAST CASTLE ST CheckValue: 1,822,265,089

Equipment Required for Inspection

No Access Requirement Changes Noted During This Inspection.
This Listing is from the Inventory Database.

ACCESS CATEGORIES FOR ENTIRE BRIDGE
Required: Walking, Extension Ladder, Small Lift, Lane Closure
Required: Shadow Vehicle

ACCESS CATEGORIES FOR SPAN 1
Required: Walking, Extension Ladder, Small Lift, Shadow Vehicle

ACCESS CATEGORIES FOR SPAN 2
Required: Walking, Extension Ladder, Small Lift, Lane Closure
Required: Shadow Vehicle

ACCESS CATEGORIES FOR SPAN 3
Required: Walking, Extension Ladder, Small Lift, Shadow Vehicle

Inspection Date: 9/17/2013 RC: 33 BIN: 1031559

Culvert Measurements

Carried: 81I 81I33032033 Crossed: EAST CASTLE ST CheckValue: 1,822,265,089

Culvert Measurements

NO CULVERT DATA FOR BIN 1031559

Standard Photos **RC: 33 BIN: 1031559**

Carried: 81I 81I33032033 Crossed: EAST CASTLE ST

1031559_LOCATION_MAP.JPG

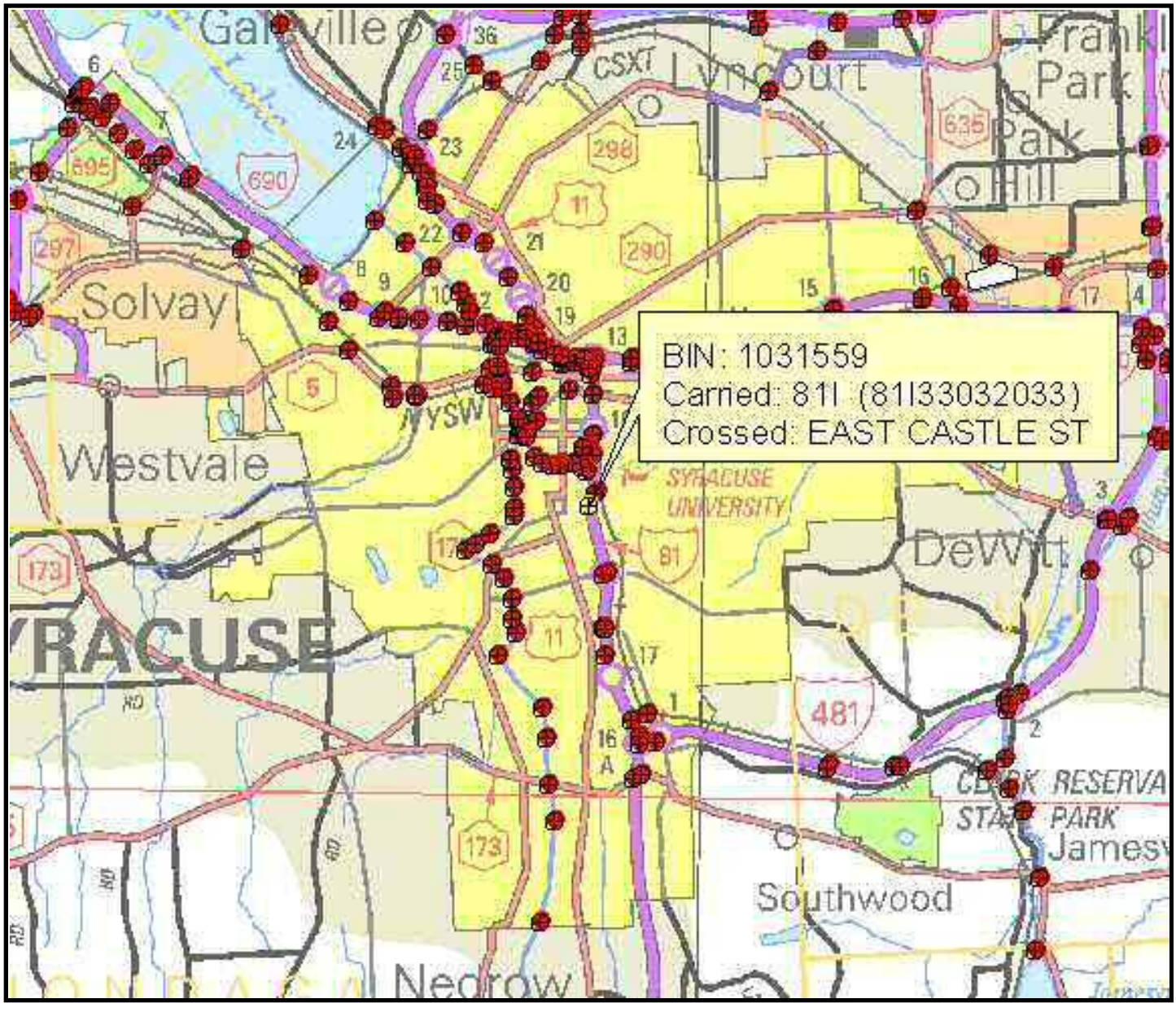

Standard Photos **RC: 33 BIN: 1031559**

Carried: 81I 81I33032033 Crossed: EAST CASTLE ST

1031559_QUAD_MAP.JPG

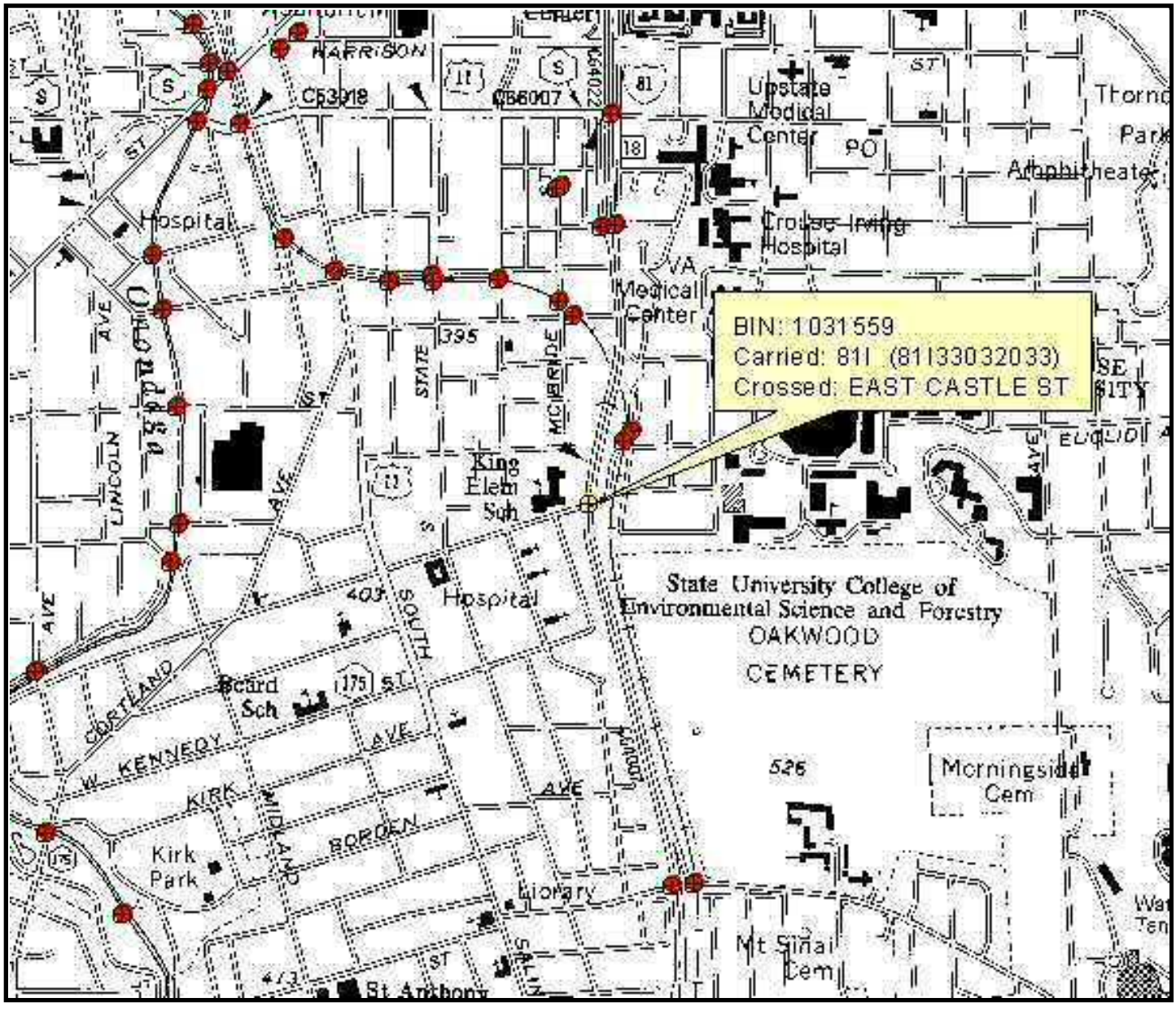

Standard Photos **RC: 33 BIN: 1031559**

Carried: 81I 81I33032033 Crossed: EAST CASTLE ST

13BeginApproach.jpg



Standard Photos **RC: 33 BIN: 1031559**

Carried: 81I 81I33032033 Crossed: EAST CASTLE ST

13EndAbutment.jpg



Standard Photos **RC: 33 BIN: 1031559**

Carried: 81I 81I33032033 Crossed: EAST CASTLE ST

13EndApproach.jpg



Standard Photos **RC: 33 BIN: 1031559**

Carried: 81I 81I33032033 Crossed: EAST CASTLE ST

13EndRightWingwall5.jpg



Standard Photos **RC: 33 BIN: 1031559**

Carried: 81I 81I33032033 Crossed: EAST CASTLE ST

13F2Left.jpg



Standard Photos **RC: 33 BIN: 1031559**

Carried: 81I 81I33032033 Crossed: EAST CASTLE ST

13F2Right.jpg



13Pier1.jpg



Standard Photos **RC: 33 BIN: 1031559**

Carried: 81I 81I33032033 Crossed: EAST CASTLE ST

13RightElevation.jpg

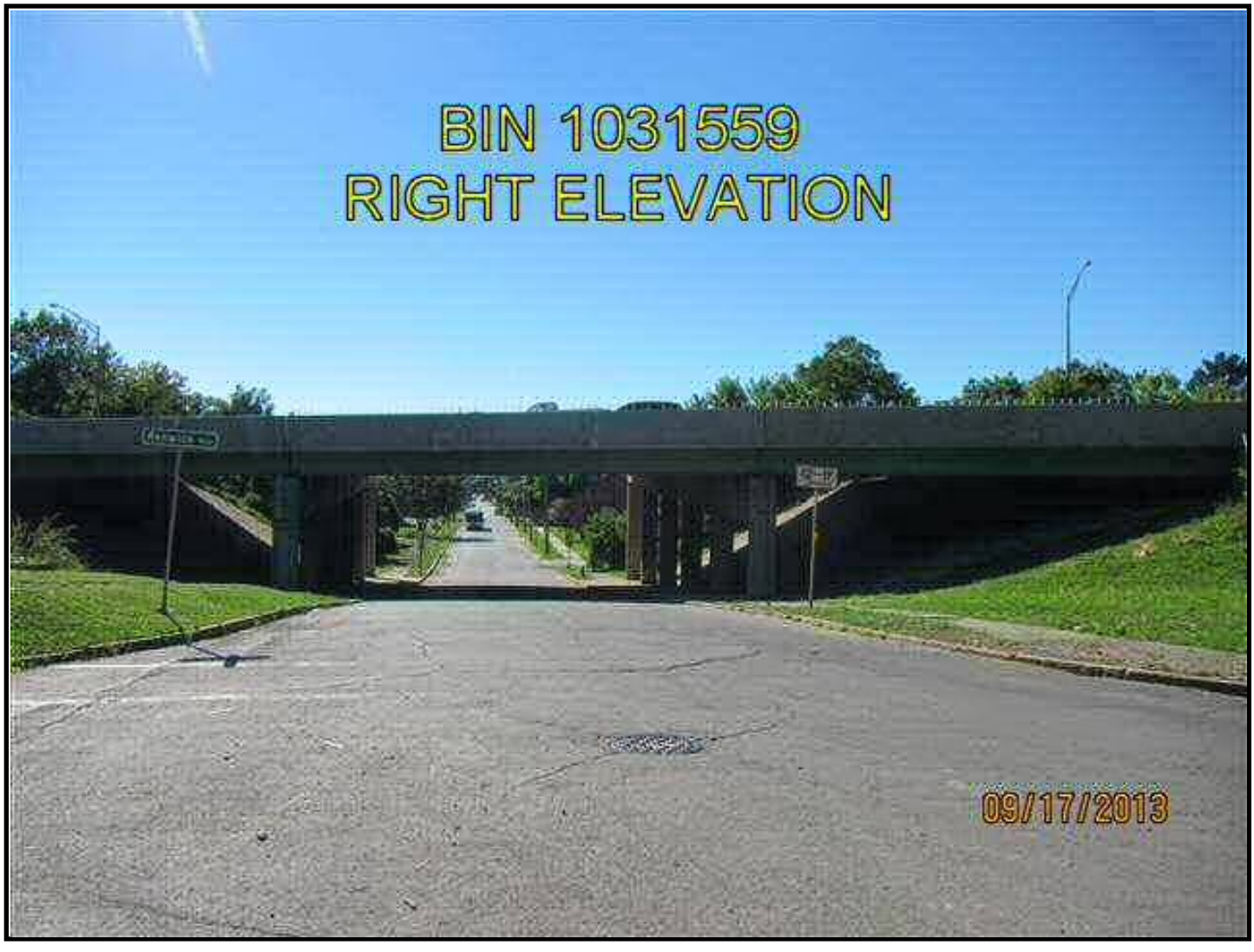

Standard Photos **RC: 33 BIN: 1031559**

Carried: 81I 81I33032033 Crossed: EAST CASTLE ST

13Sign.jpg



Standard Photos **RC: 33 BIN: 1031559**

Carried: 81I 81I33032033 Crossed: EAST CASTLE ST

13Underside.jpg



Standard Photos **RC: 33 BIN: 1031559**

Carried: 81I 81I33032033 Crossed: EAST CASTLE ST

13UtilLeft.jpg

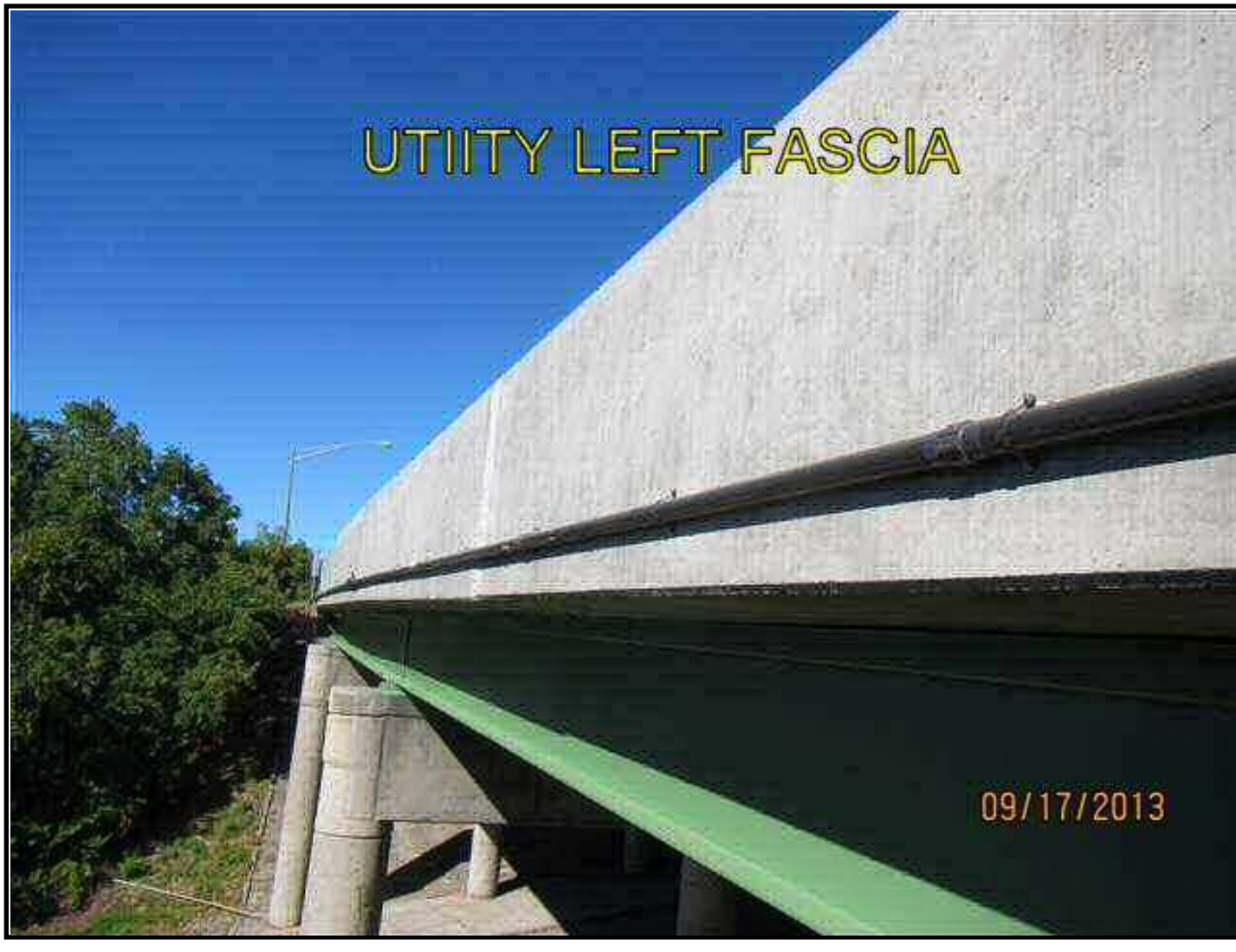

LOAD RATING

D031085 P.I.N. 3501.60

B.I.N. 1031559

FEATURE CARRIED: **I-81 Southbound/Northbound**

FEATURE CROSSED: **East Castle St.**

TABLE OF CONTENTS

- LOAD RATING SUMMARY
- FIGURES (BRIDGE CROSS SECTION, FRAMING PLAN, AND GIRDER ELEVATION)
- AASHTOWARE BRIDGE RATING (FORMERLY VIRTIS) INPUT DATA
- AASHTOWARE BRIDGE RATING (FORMERLY VIRTIS) OUTPUT DATA
- RECORD DRAWINGS

Notes and Assumptions:

1. Load rating analysis of existing superstructure was performed by using AASHTOWare Bridge Rating software per project scope.
2. Based on In-depth bridge inspection report dated 3/31/2014, there was no significant section loss observed for the existing girders. However, due to the age of the steel a blanket 5% section loss was included in load rating.
3. Substructure is not included in the load rating analysis unless otherwise noted.

LOAD RATING SUMMARY

LEVEL 1 LOAD RATING SUMMARY SHEET

Region/County Region 3/Onondaga BIN 1031559
Feature(s) Carried and Crossed I-81 Southbound and Northbound/E. Castle Street
Date of field inspection upon which Level 1 rating is based 3/31/2014

OVERALL BRIDGE RATINGS (BASED ON LOWEST RATED ELEMENTS):

Total number of rating units 1

	H inventory	H operating	HS inventory	HS operating
Rating	H 43.87 (tons)	H 73.26 (tons)	HS 57.39 (tons)	HS 95.84 (tons)
Lowest rated element	Girder G1 (S4 plan), Span 1 NB	Girder G1 (S4 plan), Span 1 NB	Girder G1 (S4 plan), Span 1 NB	Girder G1 (S4 plan), Span 1 NB

Analysis method LFR Comments

Individual Rating Unit Level 1 values:

Rating unit span(s) 1

Main member ratings

	H inventory	H operating	HS inventory	HS operating
Rating	H (tons)	H (tons)	HS (tons)	HS (tons)
Lowest rated element				

Analysis method Comments

Floorbeam ratings

	H inventory	H operating	HS inventory	HS operating
Rating	H (tons)	H (tons)	HS (tons)	HS (tons)
Lowest rated element				

Analysis method Comments

Stringer ratings

	H inventory	H operating	HS inventory	HS operating
Rating	H 43.87 (tons)	H 73.26 (tons)	HS 57.39 (tons)	HS 95.84 (tons)
Lowest rated element	Girder G1 (S4 plan), Span 1 NB	Girder G1 (S4 plan), Span 1 NB	Girder G1 (S4 plan), Span 1 NB	Girder G1 (S4 plan), Span 1 NB

Analysis method LFR Comments

Certified by Date

Quality Control Engineer Signature Date
Agency or Company represented by certifier

Note:
-If connection ratings govern, record them under stringer ratings for stringer – floorbeam connection, floorbeam ratings for floorbeam-main member connections, etc.
-When Level 1 results indicated the need for load posting or other corrective action, the NYSDOT Regional Structures Engineer shall be notified immediately.
-Load ratings should be filed in the regional office within 60 days of completion of calculations.
-Bridges shall be flagged based on Level I results in accordance with the current NYSDOT flagging procedure.
-Bridge load posting, closure, etc. determinations shall be made as results are being produced.

PARSONS

100 Broadway
New York, NY 10005
Phone: 212-266-8300
Fax: 212-571-6825
www.parsons.com

TECHNICAL MEMORANDUM

FROM: Kian Siang Chau, P.E
NYSPE 082744

DATE: JUNE 6, 2014

RE: SEISMIC SCREENING SUMMARY
NEW YORK STATE DEPARTMENT OF TRANSPORTATION
D031085; PIN 3501.60; I-81

BIN: 1031559 (I-81/ E Castle St)

This memorandum summarizes the seismic screening conducted for BIN 1031559 as part of the Interstate 81 Project in Syracuse, NY. The purpose of the screening is to determine if seismic retrofits are warranted at the superstructure to substructure connection, and if further seismic evaluation of the structure is required. This memorandum will give the screening results, retrofits required and recommendations for further seismic evaluation of the structure.

SCREENING PROCEDURE

The seismic screening was performed in accordance with the FHWA Seismic Retrofitting Manual for Highway Structures: Part 1 - Bridges, January 2006. As per the referenced manual, seismic screenings were performed for both lower level and upper level earthquake ground motion. The lower level earthquake ground motion has a reasonable likelihood of occurrence within the life of the bridge (50% probability of exceedance within a 75 year bridge life). The upper level earthquake ground motion has a finite likelihood of occurrence within the life of the bridge (7% probability of exceedance within a 75 year bridge life).

Values for the spectral acceleration for the Syracuse area used in the screening are as follows:

- Lower Level Earthquake Ground Motion for a Short Period (0.2 seconds): $S_S = 0.0251$
- Lower Level Earthquake Ground Motion for a Long Period (1.0 seconds): $S_1 = 0.0076$
- Upper Level Earthquake Ground Motion for a Short Period (0.2 seconds): $S_S = 0.139$
- Upper Level Earthquake Ground Motion for a Long Period (1.0 seconds): $S_1 = 0.047$

These values are considered constant and are the same for all seismic screenings of bridges in the Syracuse area.

The Site Class is based on the soil conditions at the bridge location. It was determined that this parameter has little effect on the results of the seismic screening because the spectral acceleration values for the Syracuse area are small. Based on this, a site class of D was used for all seismic screenings of bridges in the Syracuse area.

Bridge parameters used in the seismic screening were retrieved from the record drawings and WinBolts data.

The seismic screening takes into account the anticipated service life, importance, and the seismic exposure of the bridge to determine a seismic retrofit category (SRC). The SRC is then used to determine seismic evaluation methods and retrofit measures. There are four SRCs, A through D. Seismic retrofit category A is the lowest category; bridges in this category do not require retrofits or further seismic evaluation. Seismic retrofit category D is the highest category; bridges in this category requiring the most rigorous seismic evaluations and retrofits.

SCREENING RESULTS

The SRC for the bridge is "**C**" for lower level earthquake ground motion and "**B**" for upper level earthquake ground motion.

RETROFITS REQUIRED

No seismic retrofits are required for the bridge superstructure to substructure connection.

RECOMMENDATIONS FOR FURTHER SEISMIC EVALUATION

For the lower level earthquake ground motion, it is recommended that capacity/demand ratios for bridge components are calculated as per Section 5.4 of the referenced manual. For the upper level earthquake ground motion, it is recommended that the capacities of the bearings are checked as per Section 5.2 of the referenced manual.

Retrofit cost estimates will be provided after any further required seismic evaluations are completed.

PARSONS

100 Broadway
New York, NY 10005
Phone: 212-266-8300
Fax: 212-571-6825
www.parsons.com

TECHNICAL MEMORANDUM

FROM: Kian Siang Chau, P.E
NYSPE 082744

DATE: JULY 1, 2014

RE: FATIGUE EVALUATION
NEW YORK STATE DEPARTMENT OF TRANSPORTATION
D031085; PIN 3501.60; I-81

BIN: 1031559 (I-81 / E Castle St.)

This memorandum documents a fatigue evaluation conducted for the existing Interstate 81 Viaduct Project. Existing structures with AASHTO Category D, E, and E' fatigue-prone details require 100% hands-on inspection unless proven to be exempt. The purpose of the evaluation is to assess the remaining life of fatigue-prone components.

EVALUATION PROCEDURES

The fatigue evaluation was performed in accordance with the AASHTO Guide Specification for Fatigue Evaluations of Existing Steel Bridges, 1990. Fatigue-prone welds identified in the biennial inspection reports were located on record drawings and confirmed visually in the field. Additional information concerning fatigue-prone welds located in BIN folders was also obtained and reviewed prior to inspection.

EVALUATION RESULTS

The results of the fatigue evaluation of the existing bridge are shown below. The remaining safe fatigue life of the fatigue components have been **exhausted**.

Fatigue Detail Location	Remaining Safe Fatigue Life (Years)	Remaining Mean Fatigue Life (Years)
Interior Girders, End of Bottom Flange Cover Plate	-15.41	63.92
Exterior Girders, End of Bottom Flange Cover Plate	-22.44	29.30

IN-DEPTH INSPECTION REPORT

D031085 P.I.N. 3501.60

ELEMENT SPECIFIC BRIDGE WORK

B.I.N. 1051081

TEAM LEADER Andrew P. Thompson 84914
NYSPE LICENSE #

ASSISTANT TEAM LEADER Mike Savino

FEATURE CARRIED I-690 Westbound

FEATURE CROSSED CSX TRANS/PEAT ST

DATE FIELD WORK BEGAN 3/24/13

DATE FIELD WORK COMPLETED 3/28/14

TABLE OF CONTENTS

- STRUCTURE IDENTIFICATION
- INTRODUCTION
- PROJECT LOCATION MAP
- IN-DEPTH CONDITION DOCUMENTATION
- PLANS & SKETCHES
- IN-DEPTH PHOTO DOCUMENTATION
- ASBESTOS SAMPLING SURVEY
- LATEST BIENNIAL INSPECTION REPORT

STRUCTURE IDENTIFICATION

a. Bridge Identification Number (BIN): 1051081
b. Reference Marker: 690I 3301 2057
c. Region: NYSDOT Region 3
d. County: Onondaga
e. Town: City of Syracuse
f. Feature Carried: I-690 Westbound
g. Feature Crossed: CSX Trans/Peat St.

INTRODUCTION

a. Bridge History
   i. Year Built: 1971
   ii. Bridge Type: Three Span, Steel Multi-girder
   iii. Span Lengths:
      Span 1 Length: 53 feet
      Span 2 Length: 53 feet
      Span 3 Length: 53 feet
   iv. Out-to-Out Width: 61.7 feet
   v. Structural Ratings and Rankings
      1. Federal Sufficiency: 90.0 (June 2013)
      2. Condition Rating: 4.5 (June 2013)
      3. General Recommendation: 5
   vi. Live Load Posting (HS25): No
   vii. National Highway System (NHS): Yes
   viii. Previous work Done: Replace wearing surface (1981). Replace joint system (1998). Repair seats & pedestals (2006).
   ix. Planned Future Work: N/A
b. Highway Classification
   i. Functional Classification: Urban Principle Arterial - Interstate
   ii. Traffic Volumes

YEAR	AADT Projected
2014	49059
2034	72898
2054	108323

PROJECT LOCATION MAP

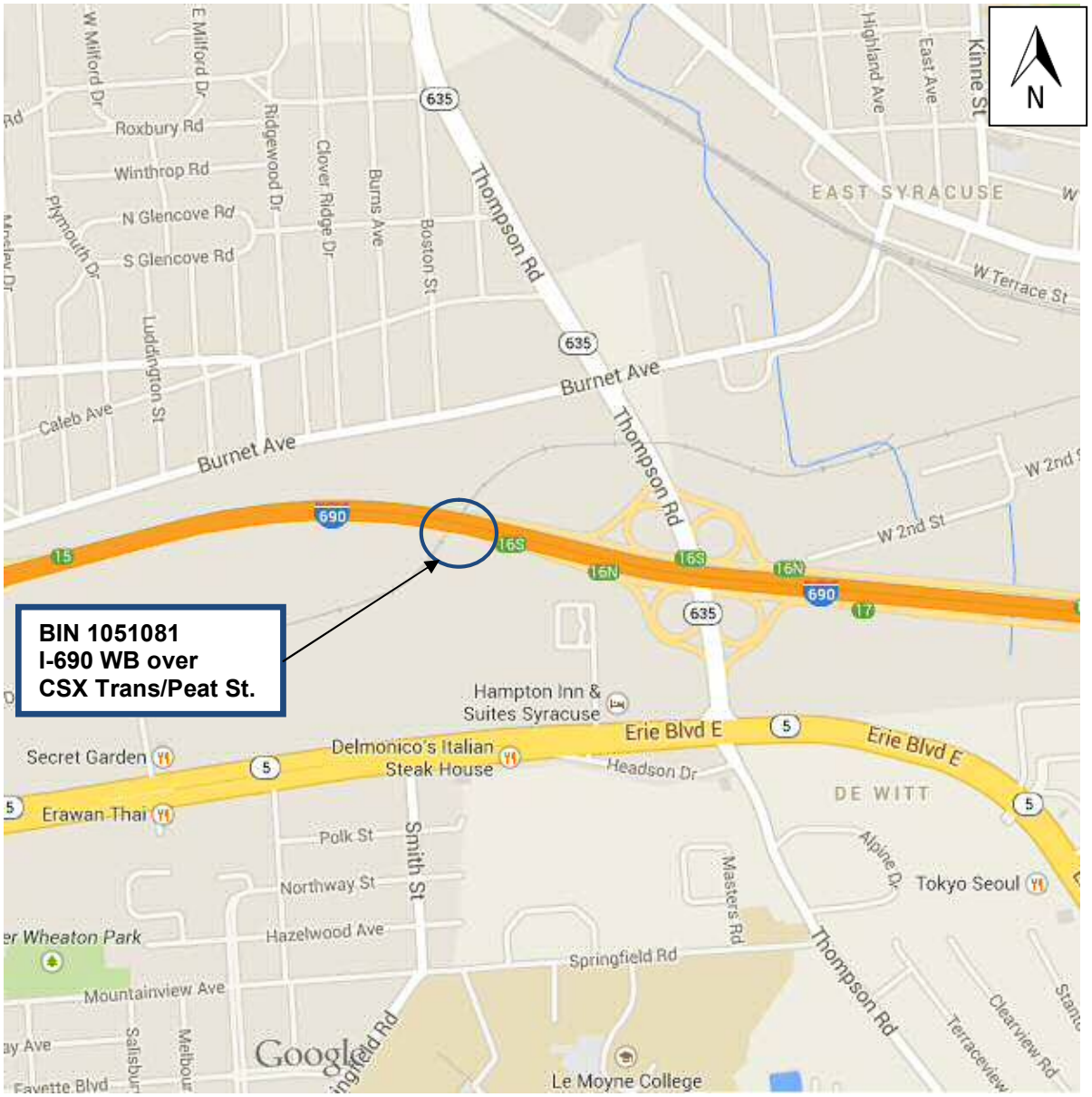

IN-DEPTH CONDITION DOCUMENTATION

NYS DEPT. OF TRANSPORTATION BRIDGE **BIN** 1051081 **SHEET:** 1 **OF** 5 **DATE:** 3/28/2014

FEATURE CARRIED: I-690 WB
FEATURE CROSSED: CSX TRANS/PEAT ST.

TEAM LEADER: A.THOMPSON
A. TEAM LEADER: M. SAVINO

ITEM	REMARKS	PHOTO N0.
	The travelway has 4 lanes numbered from left to right for the purpose of this report.	
TP 349-22	Begin Abutment – Joints: The begin header is spalled along the begin edge for its full length with asphalt patches along it (Photo 1). The settlement is most pronounced at the left edge of lane 2 with a 1.5” elevation difference creating an impact from passing vehicles (Photo 2). The seal is in fair condition.	1,2
TP 349-23	End Abutment – Joints: There is up to 6” wide x 2” deep spalling along the end header creating an impact from passing vehicles (Photo 3). In lane 2 at the left the header is missing for a 2.5’ length with 3’ long cracked sections on either side (Photo 4). The seal is in fair condition.	3,4
TP 349-24	Begin Abutment – Bearings: The begin bearings are expansion sliding on bronze plates. Fascia Bearings 1 and 8 have rust and delamination. Pack rust has bowed the bronze plates inhibiting movement (Photo 5). The remainder of the bearings are in good condition.	5
TP 349-25	End Abutment – Bearings: The end bearings are expansion sliding on bronze plates. Pack rust has bowed the bronze plates on all of the bearings inhibiting movement (Photo 6). Fascia Bearings 1, 7, and 8 are the most severe. The rockers also have moderate pack rust.	6
TP 349-26	Begin Abutment – Seats and Pedestals: The bridge has stub abutments with no seats. Pedestal 1 has a 2’ long x 3/16” wide crack on its upper right corner (Photo 7). Pedestal 8 has a 2’ long x 1/8” wide crack at a similar location (Photo 8). The areas were not hollow sounding. The remaining pedestals are in good condition.	7,8
TP 349-27	End Abutment – Seats and Pedestals: The bridge has stub abutments with no seats. Pedestal 8 has cracking on its right face with a 0.5 square foot hollow sounding area (Photo 9). It has heavy rust staining at the begin right corner. The remaining pedestals are in good condition.	9

FEATURE CARRIED: I-690 WB
FEATURE CROSSED: CSX TRANS/PEAT ST.

TEAM LEADER: A.THOMPSON
A. TEAM LEADER: M. SAVINO

ITEM	REMARKS	PHOTO N0.
TP 350-21	Spans 1 through 3 - Deck Elements – Sidewalks and Fascias Sidewalks: The bridge has safety walks. The right safety walk has map cracking throughout (Photo 10). The left sidewalk is in good condition. Spalling on the outside edges is rated under Fascias. Fascias: The fascias in all three spans are in poor condition with numerous spalls, hollow areas, and cracks. Significant areas are noted below: Span 1 Left: 9' from begin - 3 sf x 2" deep spall at bottom with exposed rebar (Photo 11); 15' from begin – 0.4 sf x 2" deep spall (Photo 12); 18' from begin - 1.25 sf x 1.5" deep spall with exposed rebar. Span 2 Left: 2' from begin – 7" dia. x 1.5" deep spall at top (Photo 13); 0.75 span – 0.5 sf hollow area at top (Photo 14). Span 1 Right: Starting 2' from begin – 3' long and 6' long spalls both 10" high x 2" deep 1' apart with exposed rebar and hollowness surrounding (Photo 15); 20' from begin – 2.25 sf cracked and hollow area (Photo 16). End – 0.5 sf x 3" deep spall with exposed rebar and 1.5 sf hollow area to begin (Photo 17). Span 2 Right: Begin – 2 sf hollow area (Photo 17); 27' from end – 2 sf x 1" deep spall with exposed rebar at bottom and 0.5 sf x 1.5" deep spall at top corner (Photo 18); 18' from end – 1.25 sf x 4" deep spall at bottom corner with exposed rebar (Photo 19); 10' from end – 1.5 sf x 1" deep spall with exposed rebar (Photo 20). Span 3 Right: Begin – 0.5 sf x 3" deep triangular spall (Photo 21).	10 11-21
TP 350-22	Spans 1 through 3 - Deck Elements – Railings and Parapets: There are several rust through holes on the bottom faces of both bridge railings near the splices. Holes were found on the right bottom rails between Posts 2 and 3, between Posts 4 and 5, at Post 12, and between Posts 15 and 16. The largest hole was between Posts 2 and 3 and measures 2' long x 2.5" wide (Photo 22). The left railing had locations of holes on the top and bottom rails. Holes were found on the left railing between Posts 1 and 2, between Posts 3 and 4, between Posts 6 and 7, between Posts 12 and 13, between Posts 15 and 16, and between Posts 17 and 18. The most severe location was between Posts 1 and 2 where the top and bottom rails had holes (Photo 23). The top rail had an 18" long x 4" wide hole. The bottom rail had a 2.5' long x 4" wide hole on the bottom and smaller holes on the sides. The bottom splice was not connected. The heavy bridge rail post just to the begin of the bridge on the left has impact damage (Photo 24). The post is deflected 5" toward the begin and detached from the top rail. The top rail connection to Post 13 is loose (Photo 25). The remainder of the rails and posts are in good condition.	22-25

ITEM	REMARKS	PHOTO N0.
TP 350-27	Spans 1 through 3 - Superstructure – Structural Deck: The structural deck is a 9.75" thick concrete mono deck with SIP forms. The original deck was 7.5” thick, and there is no record in the inventory or BIN folder of a wearing surface addition. There are several hollow and patched areas as shown in the Deck Deterioration Plan (Photos 26 and 27). There are (2) 2.5" wide x 1" deep spalls at a seam in the wearing surface measuring 2' and 1' long located in Lane 2 in Span 3 (Photo 28). There is a 0.3 sf x 1/2” deep spall in Lane 1 in Span 1 at the end (Photo 29). Overall, 5.8% of the deck is damaged. The deck has SIP forms, and the underside is exposed only at the overhangs and at the haunches adjacent to the abutment backwalls. The forms are in good condition throughout all spans. The Span 2 right overhang has a 1.5 sf x 3” deep spall with honeycombing and exposed rebar located 3’ from the end (Photo 21). The remainder of the overhangs have areas of rust staining and map cracking throughout with some fascia spalls extending into the deck (Photo 30). The haunch at the begin abutment has a 15” long x 6” high x 3” deep spall at the left (Photo 31). The remainder of the haunches at both abutments have only hairline cracking.	21 26-31
TP 350-30	Spans 1 through 3 - Superstructure – Paint: The tops of the fascia outside bottom flanges have 20% to 50% paint failure in all spans (Photo 32). The fascia outside web faces typically have +/-5% paint failure. The right fascia girders are more severe in each span (Photo 33). Ends of girders and end diaphragms have up to 50% paint failure in locations of leaky joints (Photo 34).	32-34
TP 350-31	Span 1 Superstructure – Joints: The end header in the left lane has a 0.2 sf x ½” deep spall (Photo 29). There are 3 full width sections that sound hollow. The end header has 20” and 15” hollow lengths, and the begin header has a 2.5’ hollow length. The seal has lost its bond and is deflected and torn in lane 3 (Photo 35). The remainder of the seal and headers appear in good condition.	29,35
TP 350-31	Span 2 Superstructure – Joints: The seal is debonded and raised slightly on lanes 3 and 4 (Photo 36). The remainder of the seal appears in good condition. The headers are in good condition.	36
TP 350-33	Pier 1 – Bearings: Both rows of bearings on Pier 1 are fixed. Bearings 1, 6, 7, and 8 have areas of rust, delamination, and pack rust under the rockers (Photo 37). The remaining bearings are in good condition.	37

NYS DEPT. OF TRANSPORTATION BRIDGE

BIN 1051081

SHEET: 4 OF 5

DATE: 3/28/2014

FEATURE CARRIED: I-690 WB
FEATURE CROSSED: CSX TRANS/PEAT ST.

TEAM LEADER: A.THOMPSON

A. TEAM LEADER: M. SAVINO

ITEM	REMARKS	PHOTO N0.
TP 350-34	Pier 1 – Pedestals: Spalls were noted on the begin faces of Pedestals 3 (1.4 sf x 1.25" deep) and 4 (1.9 sf x 1.5" deep) (Photo 38). The pedestals have other spalled, cracked, and hollow areas as shown in the Pier 1 Deterioration Sketch. None of the pedestal spalls undermine the bearings.	38
TP 350-37	Pier 1 – Cap Beam: There is a 1.8 sf x 1.5" deep spall on the end face of the cap beam under Pedestal 6 (Photo 39). The cap beams have other spalled, cracked, and hollow areas as shown in the Pier 1 Deterioration Sketch.	39
TP 350-38	Pier 1 Columns: Column 3 has a spall on its right face measuring 21.8 sf x 3" deep max (Photos 39 and 40). The begin, right, and end faces have hollow areas totaling +/-100 sf. The columns have other spalled, cracked, and hollow areas as shown in the Pier 1 Deterioration Sketch.	39,40
TP 350-33	Pier 2 – Bearings: The begin row of bearings on Pier 2 is expansion sliding on bronze plates, and the end row is fixed. Bearings 1, 6, 7, and 8 have areas of rust, delamination, and pack rust under the rockers (Photo 41). The expansion bearings have bowed bronze plates due to pack rust (Photo 42).	41,42
TP 350-34	Pier 2 – Pedestals: Pedestal 8 has a spall on its left top corner measuring full length x 3" deep (Photo 43). There is hollow sounding concrete on the top and begin faces. The pedestals have other spalled, cracked, and hollow areas as shown in the Pier 2 Deterioration Sketch. None of the pedestal spalls undermine the bearings.	43
TP 350-37	Pier 2 – Cap Beam: There is a 6 sf x 2" deep spall on the begin face at the bottom under Pedestal 2 with exposed rebar (Photo 44). There is also a 5 sf x 1.5" deep spall on the end face under Pedestal 8 (Photo 43). The cap beams have other spalled, cracked, and hollow areas as shown in the Pier 2 Deterioration Sketch.	44,43
TP 350-38	Pier 2 Columns: Column 2 has 53 sf of hollow sounding concrete which makes up over 20% of the area (Photo 45). The columns have other spalled, cracked, and hollow areas as shown in the Pier 2 Deterioration Sketch.	45

ITEM	REMARKS	PHOTO N0.
	Special Emphasis Inspection Required Non-Redundant/Fracture Critical Members - No Pin and Hangers - No Fatigue-Prone Welds - Yes Non-Categorized Fatigue-Prone Details - No Other - No Category E welds – Spans 1 through 3 - Welds at ends of cover plates (Photo 46).	46

PLANS & SKETCHES

BIN 1051081
BIN 1051082

F.I.S.H. 68-4 F.I.S.H. 68-5 F.I.S.H. [illegible]

FED. RD. REG. NO.	STATE	FEDERAL AID PROJECT NO.	SHEET NO.	TOTAL SHEETS
	NEW YORK	[illegible]	193 R1	290

INTERSTATE ROUTE CONNECTION 570
ERICKSON STREET TO SYRACUSE CITY LINE

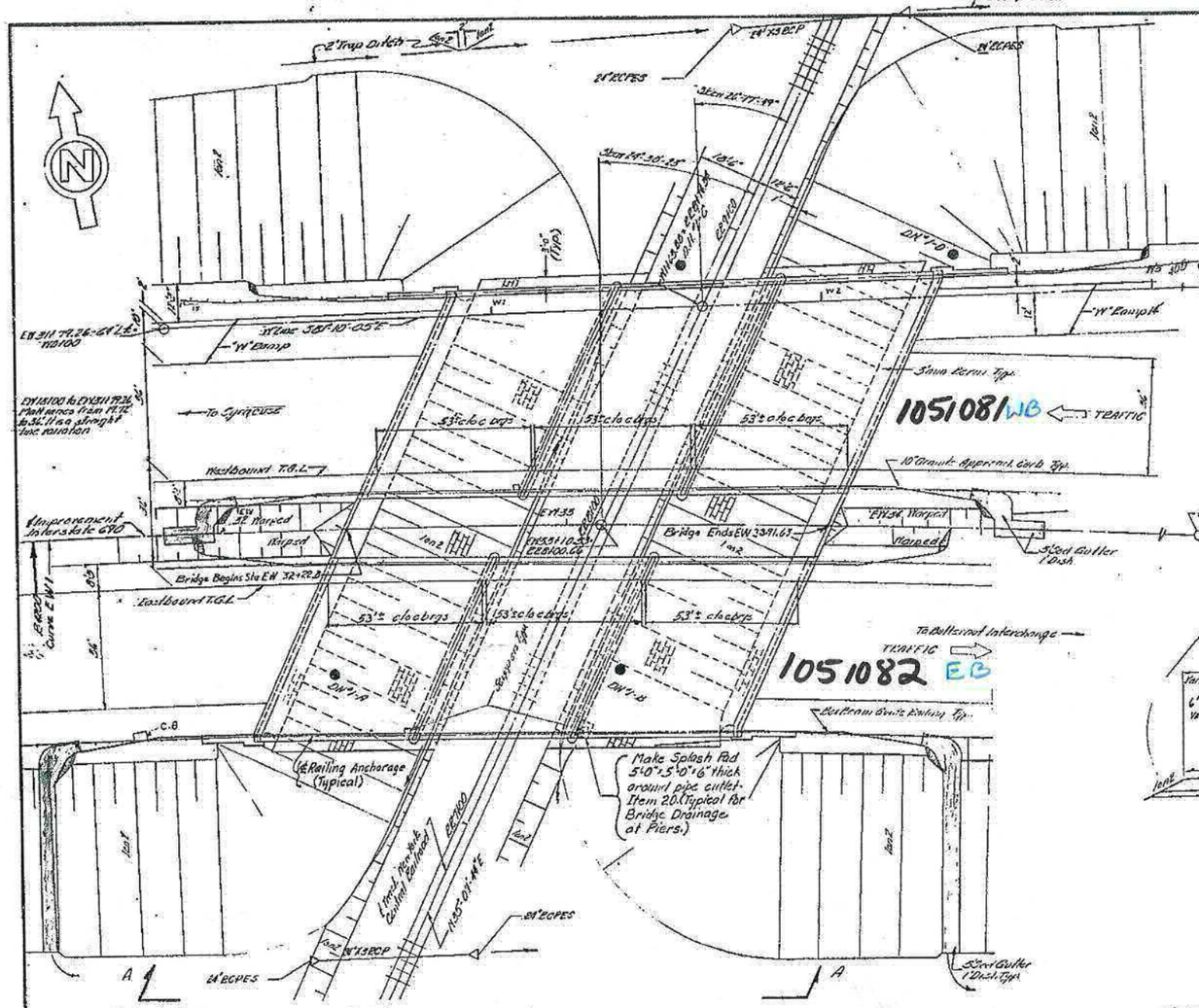

PLAN
Scale 1"=20'

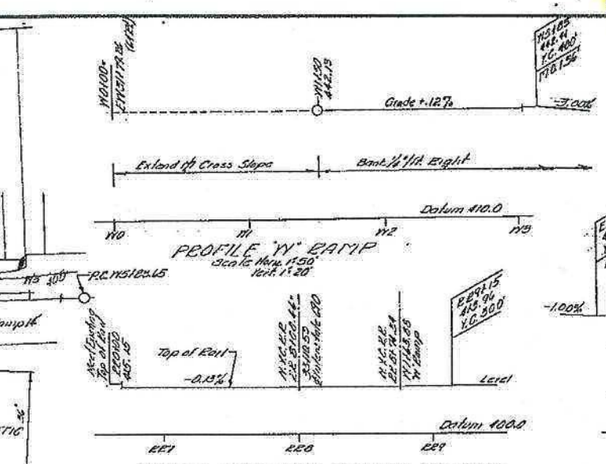

PROFILE "W" RAMP
Scale Horiz. 1"=50' Vert. 1"=20'

PROFILE NEW YORK CENTRAL RAILROAD
Scale Horiz. 1"=50' Vert. 1"=20'

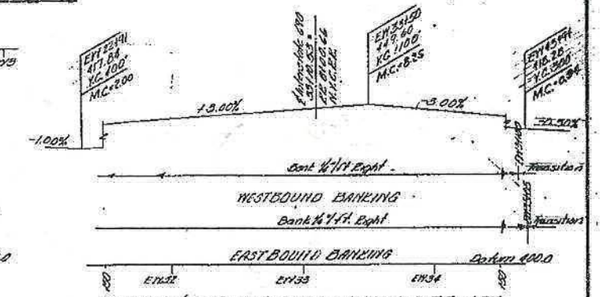

PROFILE ℄ IMPROVEMENT INTERSTATE 690
Scale Horiz. 1"=50' Vert. 1"=20'

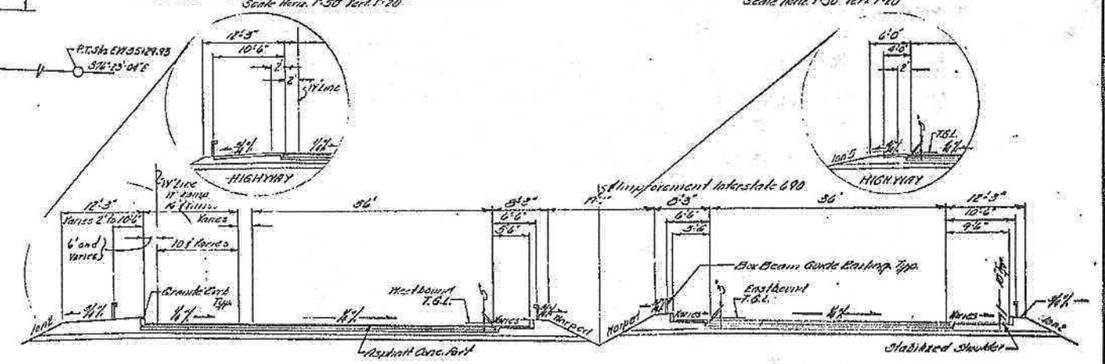

TYPICAL APPROACH SECTION
Scale 1"=10'

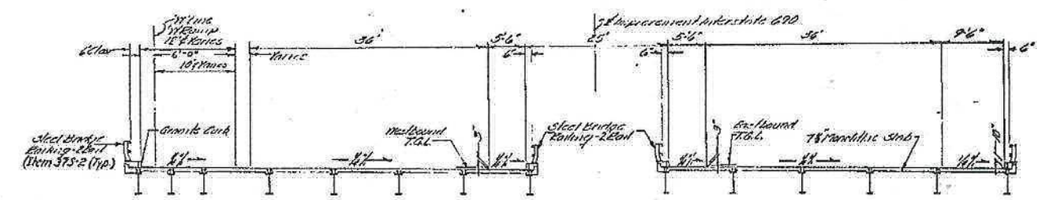

TYPICAL BRIDGE SECTION
Scale 1"=10'

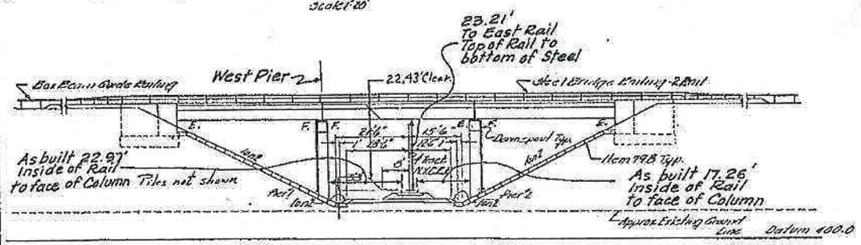

ELEVATION A-A
Scale 1"=20'

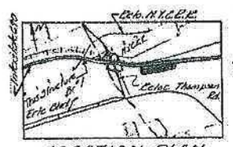

LOCATION PLAN
Scale 1"=2000'

Note
For Notes and Estimate of Quantities see Drawing No. 1 of 5 Common Details.

Curve EW1			
PC	Sta. EW 18+00.00	PI	210.27 Rt.
	114.04 Rt.		℄ A4+46.81
	℄ 244+29.17		N 1,115,218.25
	N 1,115,066.13		E 631,178.87
	E 630,314.76	R	4200.00'
C	N 1,110,929.73	Δ	23°-35'-58"
	E 631,042.92	L	1729.93
		T	877.40'
PT	Sta. EW 35+29.93	Bk	N 80°-00'-58"E
	227.66 Lt.	Ahd	S 76°-23'-04"E
	℄ CR 10+55.32		
	N 1,115,011.70		
	E 632,031.62		

AS BUILT REVISIONS
Actual Clearance Measurements

BR. NO. 1
I-690 OVER NEW YORK CENTRAL R.R.
ERICKSON ST. TO SYRACUSE CITY LINE
EW33+10.53 = R.R. 8+00.66

PLAN & PROFILE

DRAWING NO. 1 OF 25

PROJECT ENGINEER A. KAROLAK
IN CHARGE OF L.H. TURNER
DESIGNED BY
DESIGN CHECKED BY
DETAILED BY H.F. Ratta
DETAIL CHECKED BY D.C. Reinhardt

F.I.S.H. 68-4 F.I.S.H. 68-5 F.I.S.H. 68-6P

FED. RD. REG. NO.	STATE	FEDERAL AID PROJECT NO.	SHEET NO.	TOTAL SHEETS
	NEW YORK	I-281-2 (103) I-690-3 (23)	197R1	290

INTERSTATE ROUTE CONNECTION 570
ERICKSON STREET TO SYRACUSE CITY LINE

WEST ABUTMENT	
BEAM	AZIMUTH
1	98° 49' 55.0"
2	99° 54' 24.5"
3	"
4	"
5	"
6	"
7	"
8	"
9	99° 24' 40.9"
10	"
11	"
12	"
13	"
14	"

WORKING POINTS		
PT.	STATION	OFFSET(-LEFT)(+RIGHT)
1	31 + 79.66	+ 63.500
2	31 + 92.86	+ 63.500
3	31 + 96.05	+ 66.430
4	31 + 79.24	+ 60.999
5	31 + 96.06	+ 66.994
6	32 + 44.30	- 70.513
7	32 + 56.92	- 70.730
8	32 + 60.83	- 74.306
9	32 + 44.09	- 68.008
10	32 + 60.07	- 73.458
11	32 + 16.77	+ 12.500
12	32 + 28.81	- 12.500

BIN 1051082

BIN 1051081

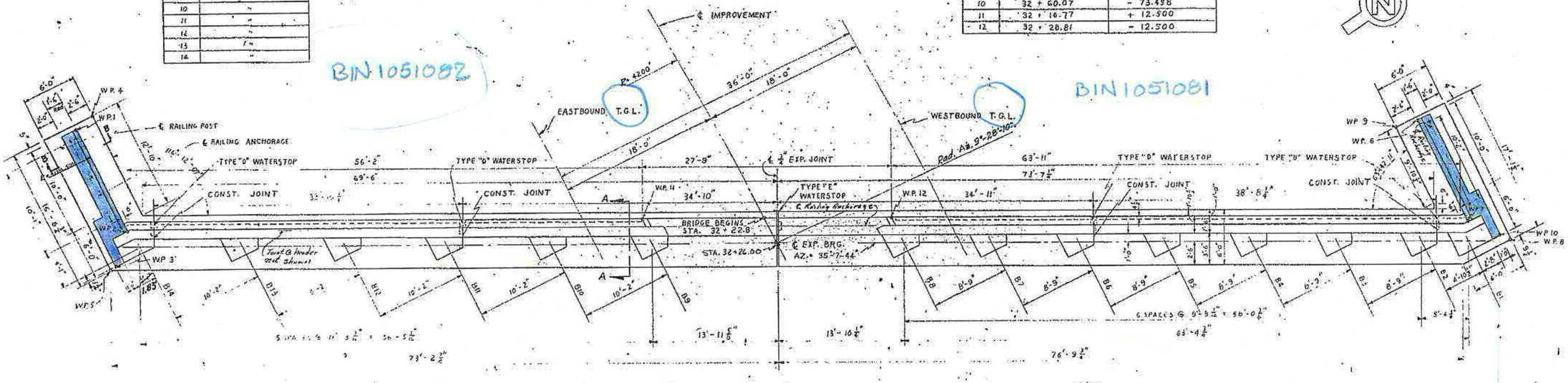

WEST ABUTMENT PLAN
SCALE 1/16" = 1'-0"

Notes:
1. FOR SECTIONS A-A, B-B, & H-H SEE DWG. #7
2. FOR WINGWALL DETAILS SEE DWG. # 6

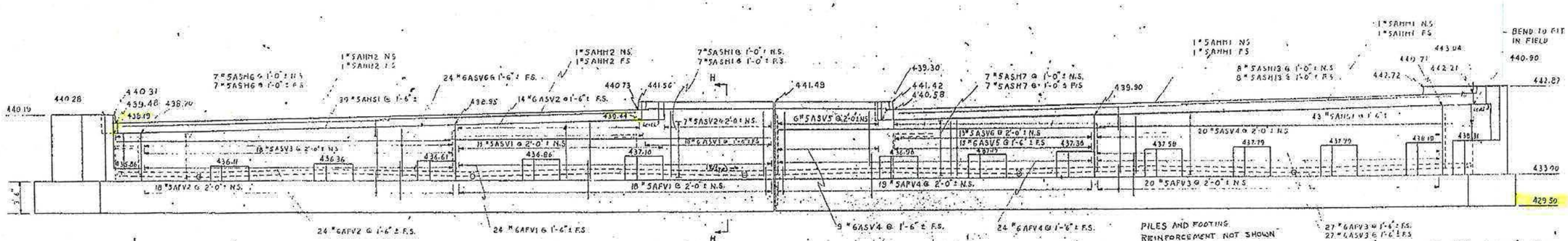

WEST ABUTMENT ELEVATION
SCALE 1/16" = 1'-0"

PILES AND FOOTING REINFORCEMENT NOT SHOWN FOR DETAILS SEE DWG. NO. 7

REINFORCEMENT BARS		
SIZE	LAP	EMBEDMENT
5	1'-1"	1'-7"
6	1'-3"	1'-11"

NOTE:-
BAR REINFORCEMENT COVER IN FOOTING TO BE 3 INCHES.
ALL OTHER COVER TO BE 2 INCHES EXCEPT AS NOTED IN SIDEWALKS.

As Built Revisions
Plan- Dimension

DR. NO. 1
I-690 OVER NEW YORK CENTRAL R.R.
ERICKSON ST. TO SYRACUSE CITY LINE
BW.33+10.53 = R.R. B+00.66

WEST ABUTMENT (1 OF 3)

BEGIN

DRAWING NO. 5 OF 23

PROJECT ENGINEER A. KARCLAK
IN CHARGE OF L. H. TURNER
DESIGNED BY L. H. TURNER
DESIGN CHECKED BY W. J. LEMLER
DETAILED BY W. J. LEMLER
DETAIL CHECKED BY [illegible]

16.3333
15.8958333

F.I.S.H. 68-4 F.I.S.H. 68-5 F.I.S.H. 68-6P

FED. RD. REG. NO.	STATE	FEDERAL AID PROJECT NO.	SHEET NO.	TOTAL SHEETS
	NEW YORK	I-281-2 (103) I 690-3 (23)	200	290

INTERSTATE ROUTE CONNECTION 570
ERICKSON STREET TO SYRACUSE CITY LINE

WORKING POINTS		- INDICATES LEFT	+ INDICATES RIGHT		
PT	STATION	OFFSET (RAD. FT.)	PT	STATION	OFFSET (RAD. FT.)
1	34 + 35.492	- 77.958	8	33 + 59.980	+ 65.165
2	34 + 23.318	- 77.219	9	33 + 76.566	+ 60.999
3	34 + 19.650	- 79.675	10	33 + 58.837	+ 66.991
4	34 + 35.968	- 75.483	11	33 + 86.206	+ 12.500
5	34 + 20.039	- 80.531	12	33 + 97.025	- 12.500
6	33 + 76.232	+ 63.500	13	33 + 95.488	- 8.929
7	33 + 63.027	+ 63.500			

W.P. to W.P.	AZIMUTH	DISTANCE (FT)
1-2	98° 49' 55.0"	12.298
6-7	101° 25' 45.0"	13.338

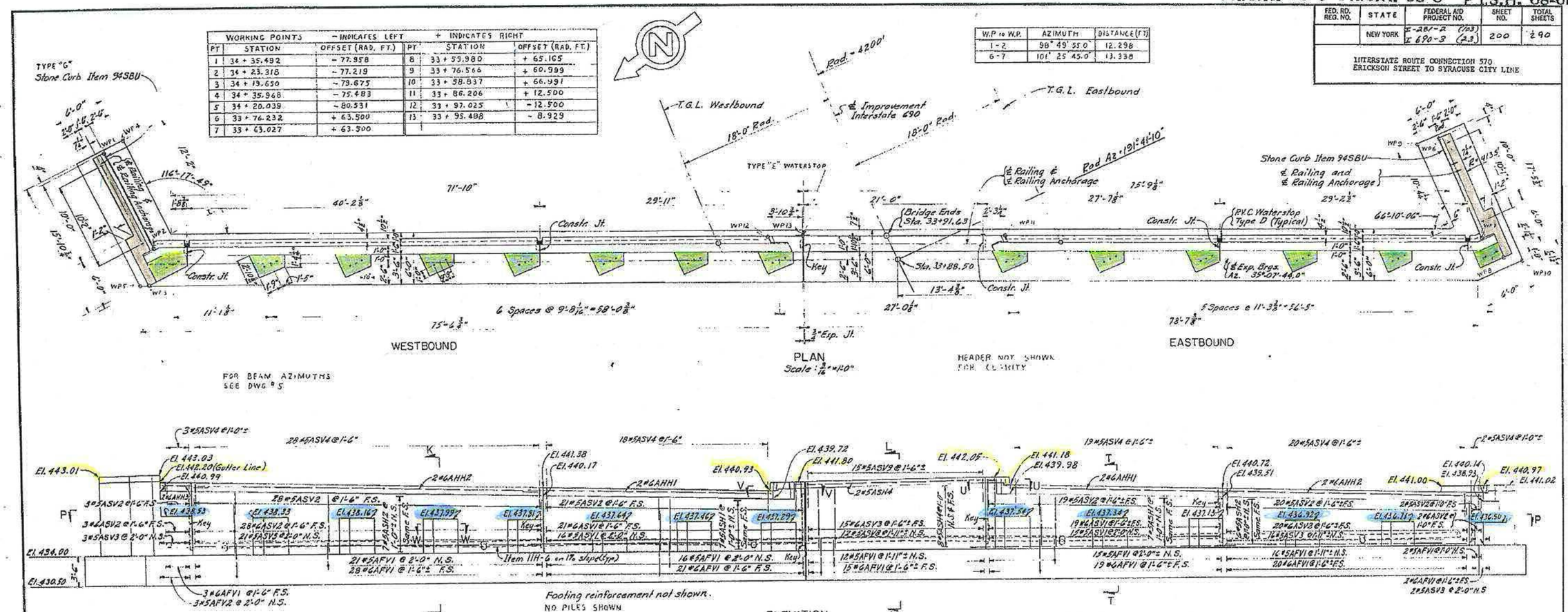

Note:- For details of Waterstops see COMMON DETAILS
For details of Keys and Construction Joints see Sheet No. 4 of 5 Common Details.

SEE DWG #9 FOR SECTIONS T-T, W-W.
SEE DWG #10 FOR SECTIONS R-R, L-L, U-U, V-V.

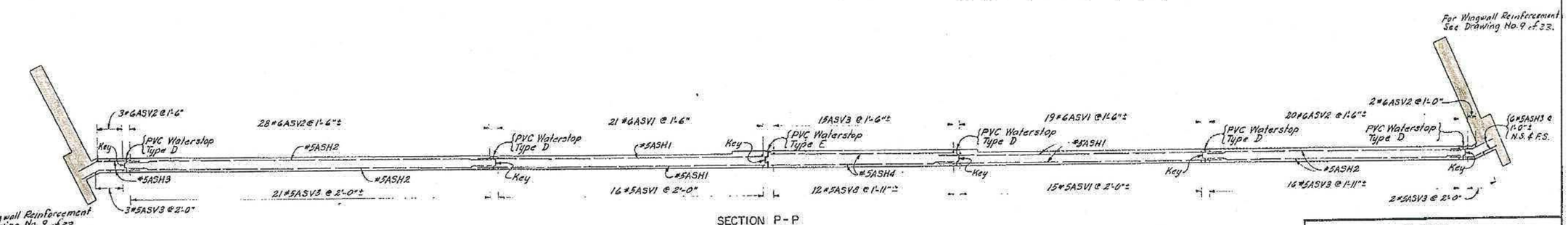

SECTION P-P
Scale: 3/16" = 1'-0"

PROJECT ENGINEER A. KAROLAK
IN CHARGE OF L.H. TURNER
DESIGNED BY L.H. TURNER
DESIGN CHECKED BY N.J. LEMLER
DETAILED BY M. LACHUT
DETAIL CHECKED BY R.W. Perry, W. Lemler

BR. NO. 1
I-690 OVER NEW YORK CENTRAL R.R.
ERICKSON ST. TO SYRACUSE CITY LINE
EW 33+10.53 = R.R. 8+00.66

EAST ABUTMENT (1 OF 3)

DRAWING NO. 8 OF 23

FED. RD. REG. NO.	STATE	FEDERAL AID PROJECT NO.	SHEET NO.	TOTAL SHEETS
	NEW YORK	I-287-2 (122) I-690-3 (23)	203	240

INTERSTATE ROUTE CONNECTION 570
ERICKSON STREET TO SYRACUSE CITY LINE

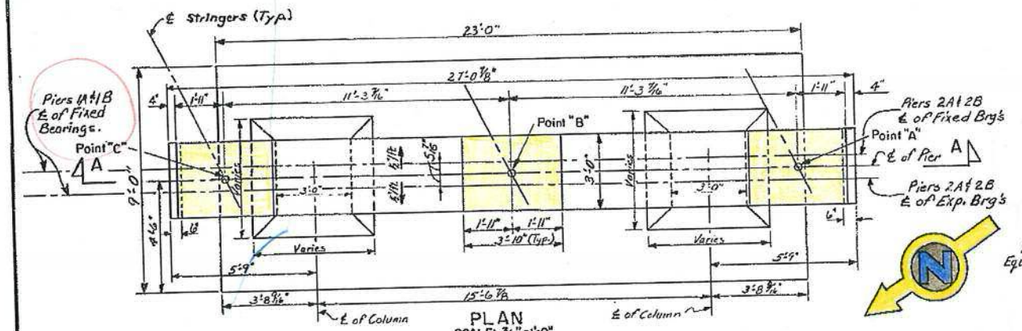

PLAN
SCALE: 3/8" = 1'-0"

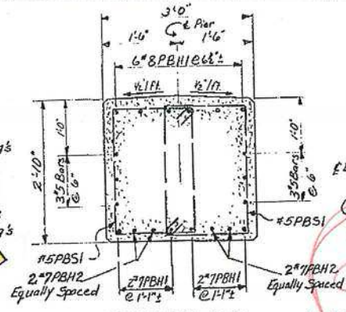

SECTION C-C
SCALE: 3/4" = 1'-0"

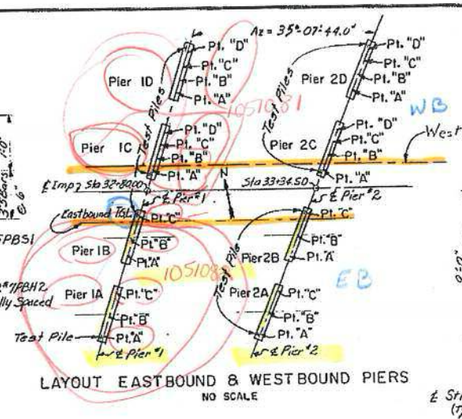

LAYOUT EASTBOUND & WESTBOUND PIERS
NO SCALE

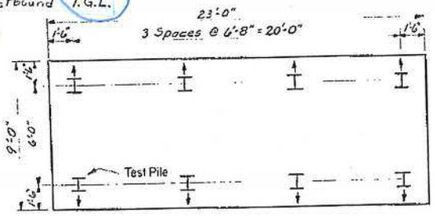

PILE PLAN
SCALE: 1/4" = 1'-0"

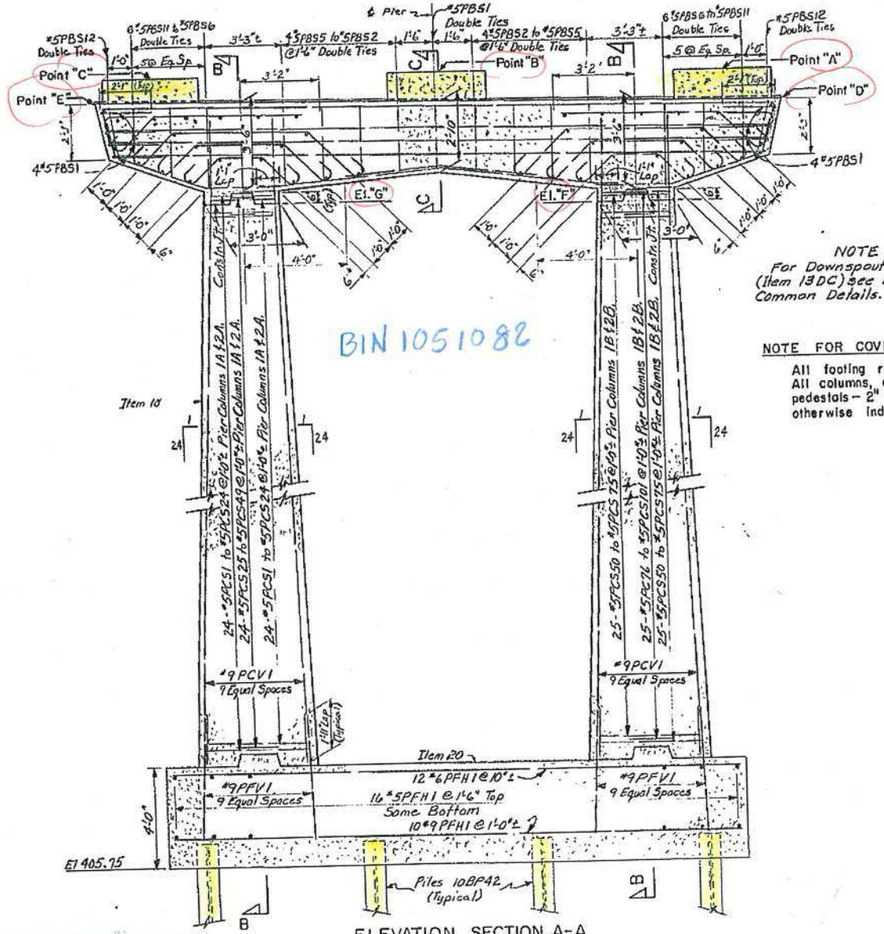

ELEVATION SECTION A-A
SCALE: 3/8" = 1'-0"

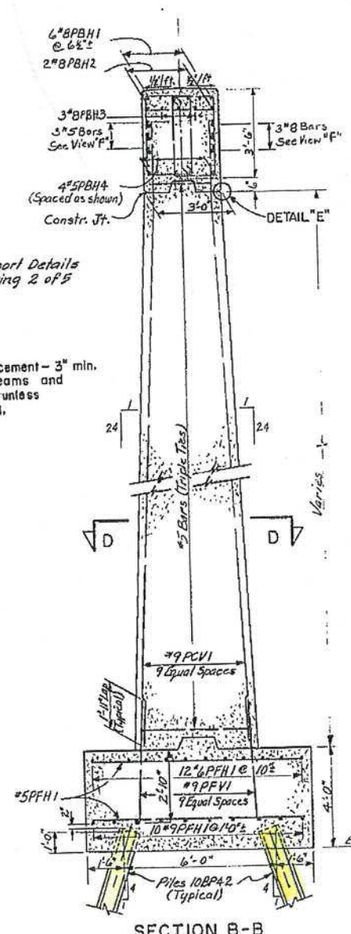

SECTION B-B
SCALE: 3/8" = 1'-0"

NOTE
For Downspout Support Details (Item 13DC) see Drawing 2 of 5 Common Details.

NOTE FOR COVER
All footing reinforcement – 3" min.
All columns, cap beams and pedestals – 2" min. unless otherwise indicated.

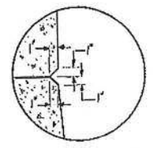

DETAIL "E"
NO SCALE

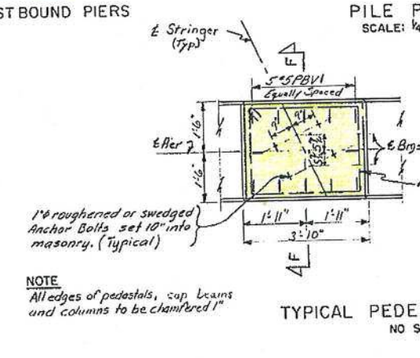

NOTE
All edges of pedestals, cap beams and columns to be chamfered 1".

TYPICAL PEDESTAL DETAILS
NO SCALE

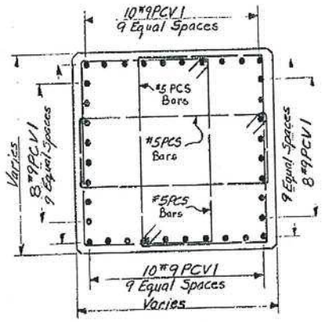

SECTION D-D
SCALE: 3/4" = 1'-0"

POINT		PIER 1A	PIER 1B	PIER 2A	PIER 2B
A	El.	436.36	437.07	436.45	437.12
	Sta.	3250.073	3264.671	3305.408	3319.599
	Offset	63.328 RT.	32.704 RT.	63.711 RT.	32.901 RT.
B	El.	436.60	437.31	436.97	437.34
	Sta.	3254.963	3269.489	3310.162	3324.283
	Offset	53.125 RT.	22.485 RT.	53.447 RT.	22.621 RT.
C	El.	436.84	437.54	436.90	437.56
	Sta.	3259.829	3274.284	3314.892	3328.944
	Offset	42.918 RT.	12.261 RT.	43.177 RT.	12.335 RT.
D	El.	435.36	436.07	435.45	436.12
E	El.	435.84	436.54	435.90	436.56
F	El.	431.46	432.17	431.35	432.22
G	El.	431.74	432.44	431.80	432.46

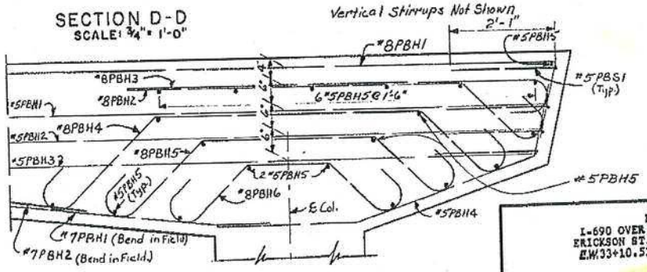

VIEW "F"
HORIZONTAL CAP BEAM REINFORCEMENT
SCALE: 3/4" = 1'-0"

BIN 1051082

BR. NO. 1
I-690 OVER NEW YORK CENTRAL R.R.
ERICKSON ST. TO SYRACUSE CITY LINE
E.W. 33+10.53 = R.R. 8+00.66

PIERS (1 OF 4)

DRAWING NO. 11 OF 23

PROJECT ENGINEER	A. KAROLAK
IN CHARGE OF	L.N. TURNER
DESIGNED BY	M.E. K.P.
DESIGN CHECKED BY	M.S.A. R.P.T.
DETAILED BY	
DETAIL CHECKED BY	

DAILYTE PRESS DIVISION GRAPHIC CONTROLS CORP. BUFFALO, N.Y. (ASTROFILM #68-4) 14759

FED. RD. REG. NO.	STATE	FEDERAL AID PROJECT NO.	SHEET NO.	TOTAL SHEETS
	NEW YORK	I-287-2 (123) I-690-3 (23)	204	290

INTERSTATE ROUTE CONNECTION 570
ERICKSON STREET TO SYRACUSE CITY LINE

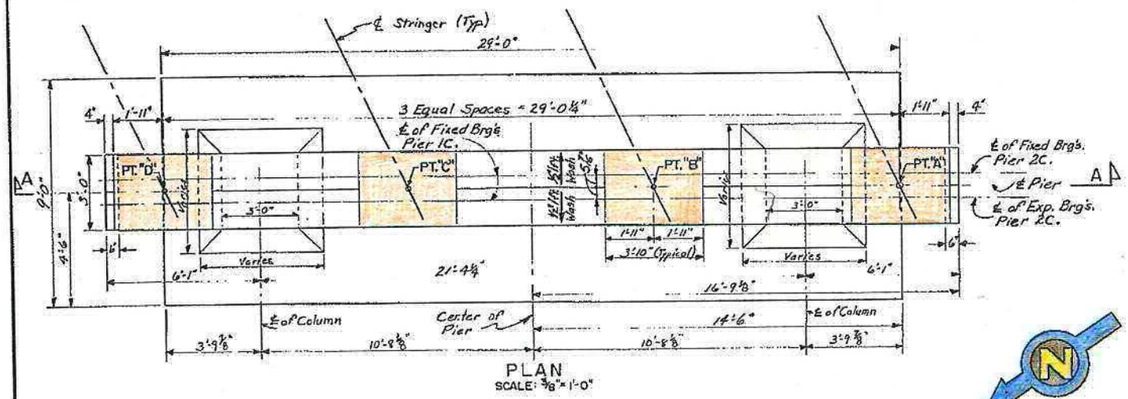

PLAN
SCALE: 3/8" = 1'-0"

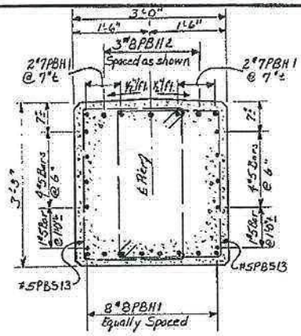

SECTION C-C
SCALE: 3/4" = 1'-0"

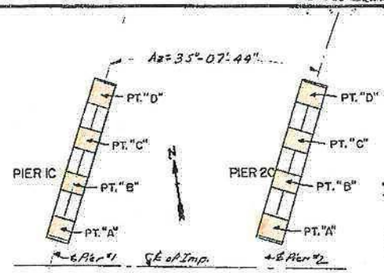

LAYOUT WESTBOUND PIERS
NO SCALE

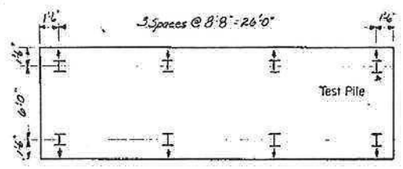

PILE PLAN
SCALE: 3/16" = 1'-0"

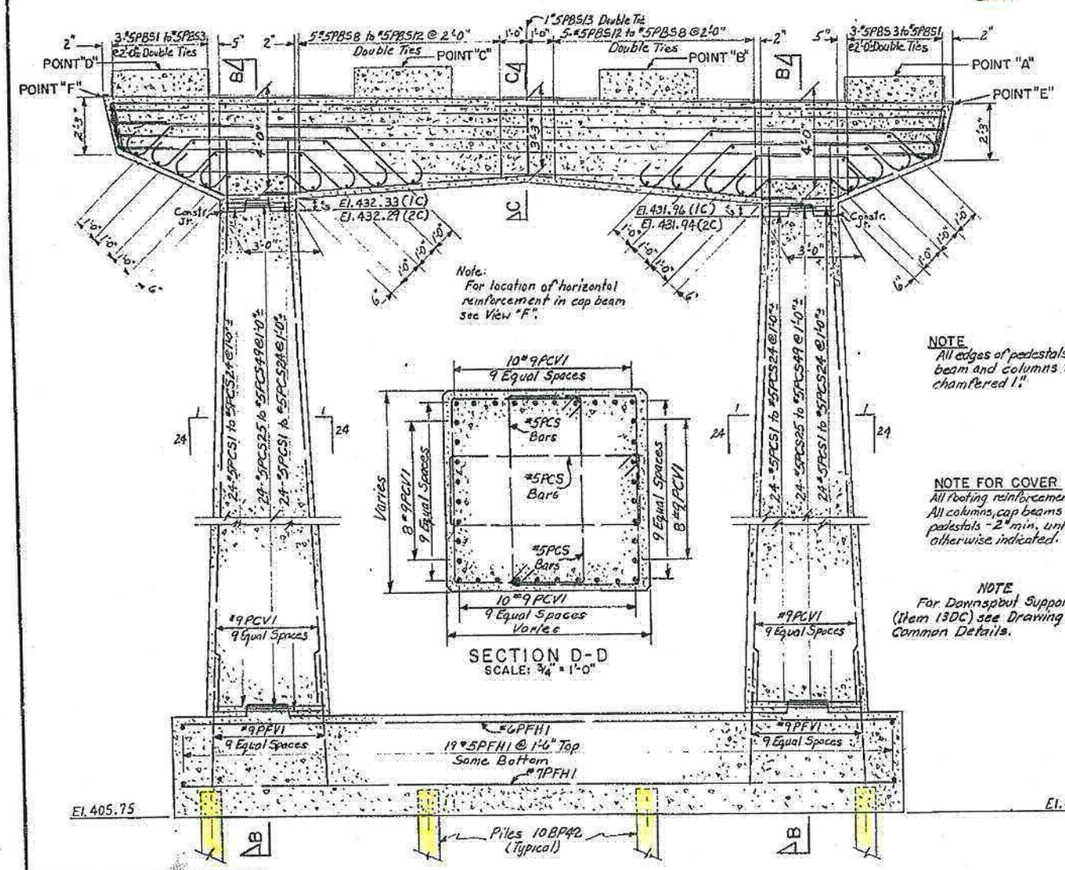

ELEVATION SECTION A-A
SCALE: 3/8" = 1'-0"

NOTE
All edges of pedestals, cap beam and columns to be chamfered 1".

NOTE FOR COVER
All footing reinforcement -3" min. All columns, cap beams and pedestals -2" min. unless otherwise indicated.

NOTE
For Downspout Support Details (Item 13DC) see Drawing No. 2 of 6 Common Details.

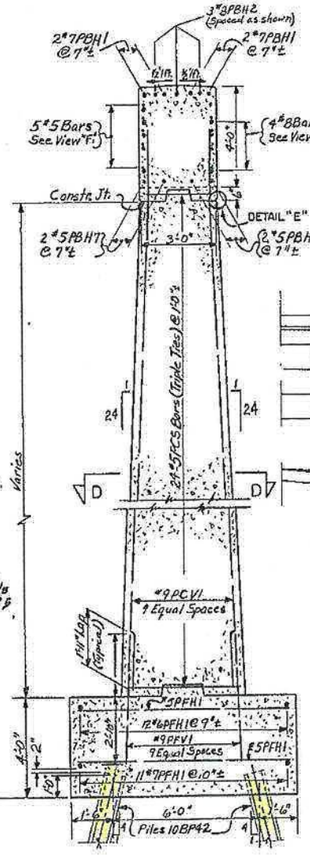

SECTION B-B
SCALE: 3/8" = 1'-0"

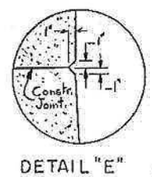

DETAIL "E"
NO SCALE

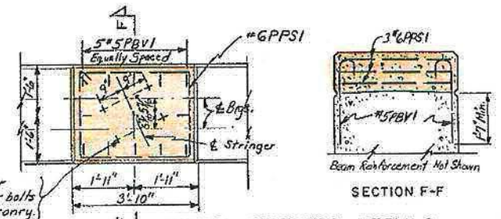

1"ϕ roughened or swedged anchor bolts set 10" into masonry. (Typical)

SECTION F-F

TYPICAL PEDESTAL DETAILS
NO SCALE

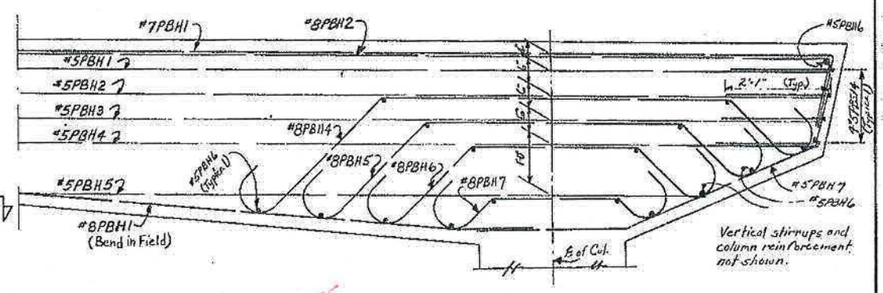

Vertical stirrups and column reinforcement not shown.

VIEW - "F"
HORIZONTAL CAP BEAM REINFORCEMENT
SCALE: 3/4" = 1'-0"

405.75

POINT		PIER 1C	PIER 2C
A	El.	437.35	437.34
	Sta.	3285.792	3340.102
	Offset	-12.506	-12.516
B	El.	437.55	437.52
	Sta.	3289.835	3344.031
	Offset	-21.284	-21.347
C	El.	437.74	437.71
	Sta.	3293.861	3347.945
	Offset	-30.068	-30.181
D	El.	437.94	437.89
	Sta.	3297.872	3351.842
	Offset	-38.854	-39.019
E	El.	436.35	436.34
F	El.	436.94	436.89

Note:
+ Indicates offset is to right
- Indicates offset is to left

BIN 1051081

BR. NO. 1
I-690 OVER NEW YORK CENTRAL R.R.
ERICKSON ST. TO SYRACUSE CITY LINE
EW 33+10.53 = R.R. 8+00.66

PIERS (2 OF 4)

DRAWING NO. 12 OF 23

PROJECT ENGINEER	E. KAROLAK
IN CHARGE OF	H. TURNER
DESIGNED BY	MS & RK
DESIGN CHECKED BY	MS & RK
DETAILED BY	[illegible]
DETAIL CHECKED BY	[illegible]

GAYLORD PRESS DIVISION GRAPHIC CONTROLS CORP. DU PONT MYLAR (ARTWORK/FILM SIDE)

FED. RD. REG. NO.	STATE	FEDERAL AID PROJECT NO.	SHEET NO.	TOTAL SHEETS
	NEW YORK	F-287-2-(18) F-690-3-(A3)	205	290

INTERSTATE ROUTE CONNECTION 570
ERICKSON STREET TO SYRACUSE CITY LINE

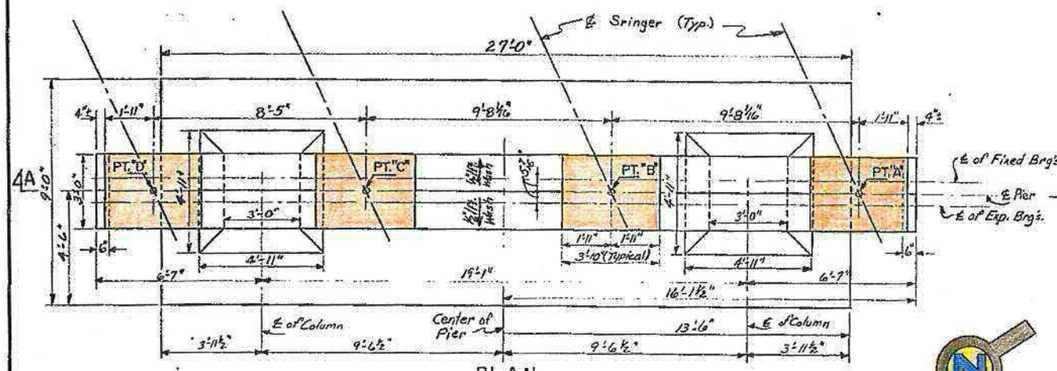

PLAN
SCALE: 3/8" = 1'-0"

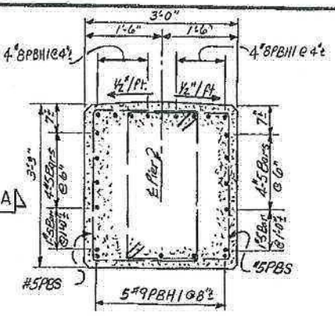

SECTION C-C
SCALE: 3/4" = 1'-0"

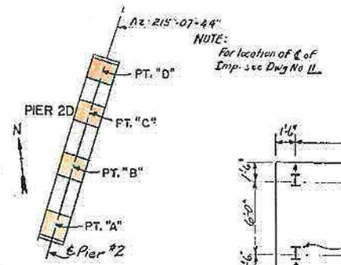

LAYOUT WESTBOUND PIER 2D
NO SCALE

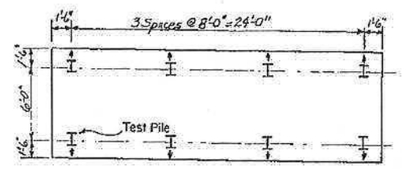

PILE PLAN
SCALE: 3/16" = 1'-0"

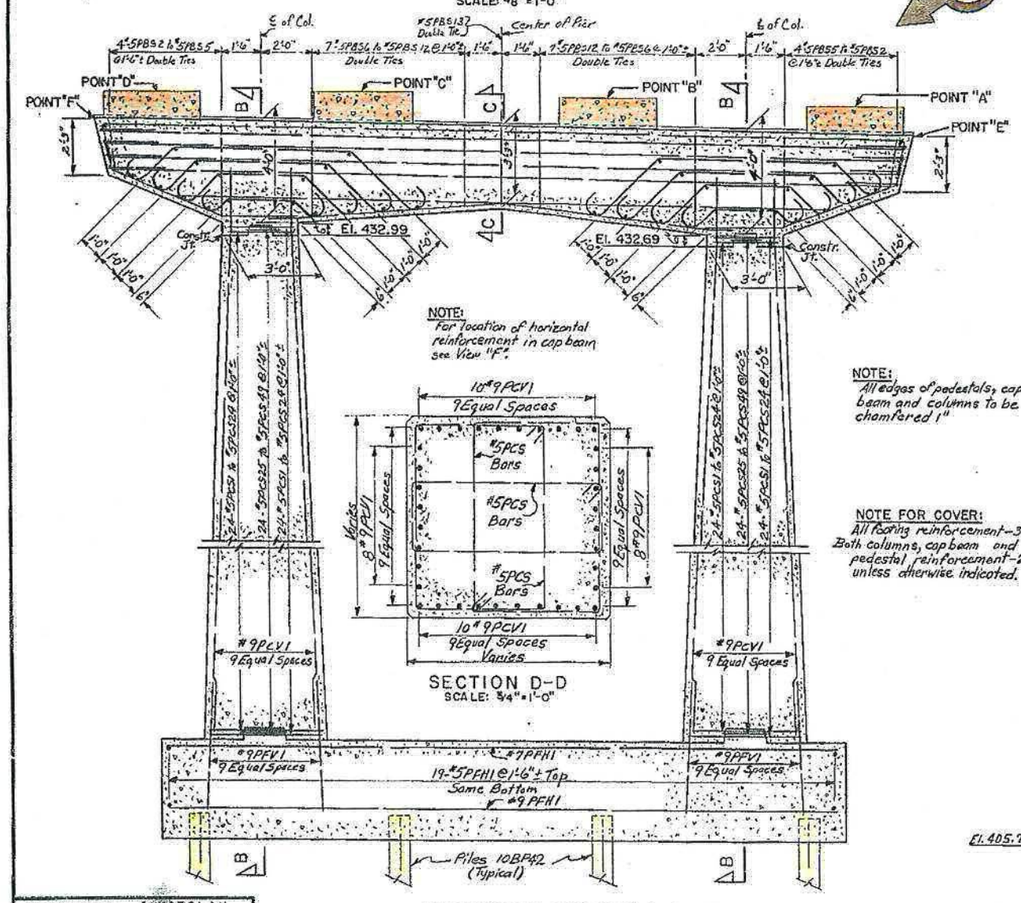

SECTION D-D
SCALE: 3/4" = 1'-0"

ELEVATION SECTION A-A
SCALE: 3/8" = 1'-0"

NOTE:
All edges of pedestals, cap beam and columns to be chamfered 1"

NOTE FOR COVER:
All footing reinforcement - 3" min. Both columns, cap beam and pedestal reinforcement - 2" min. unless otherwise indicated.

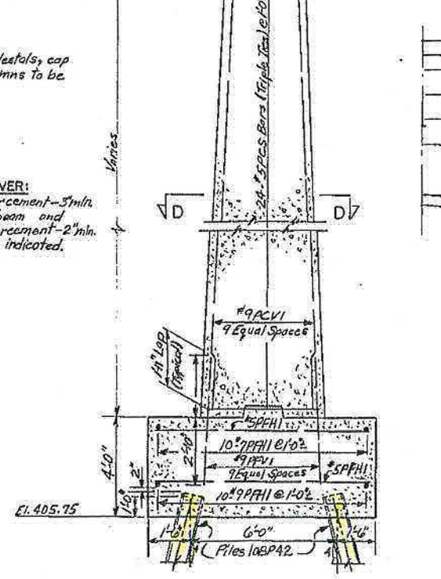

SECTION B-B
SCALE: 3/8" = 1'-0"

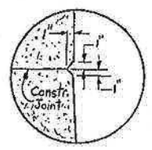

DETAIL "E"
NO SCALE

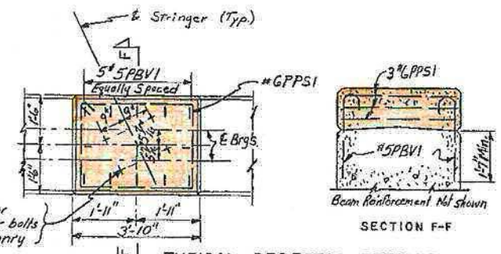

TYPICAL PEDESTAL DETAILS
NO SCALE

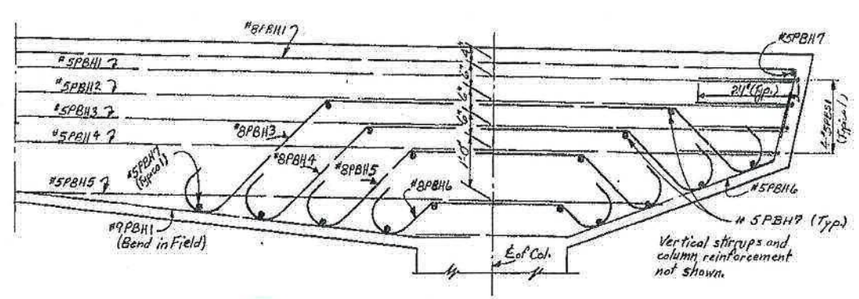

VIEW - "F"
HORIZONTAL CAP BEAM REINFORCEMENT
SCALE: 3/4" = 1'-0"

POINT		PIER 2D
A	El.	438.08
	Sta.	3355.723
	Offset	-47.861
B	El	438.26
	Sta.	3359.587
	Offset	-56.706
C	El.	438.44
	Sta.	3363.437
	Offset	-65.555
D	El.	438.60
	Sta.	3366.773
	Offset	-73.258
E	El.	437.09
F	El.	437.60

NOTE:
+ Indicates offset to the right
- Indicates offset to the left

PROJECT ENGINEER A. KAROLAK
IN CHARGE OF L.H. TURNER
DESIGNED BY R.P.& M.S.
DESIGN CHECKED BY R.P.& M.S.
DETAILED BY
DETAIL CHECKED BY

BR. NO. 1
I-690 OVER NEW YORK CENTRAL R.R.
ERICKSON ST. TO SYRACUSE CITY LINE
EW 33+10.58 = R.R. 8+00.66

PIERS (3 OF 4)

DRAWING NO. 13 OF 23

F.I.S.H. 68-4 F.I.S.H. 68-5 F.I.S.H. 68-6

FED. RD. REG. NO.	STATE	FEDERAL AID PROJECT NO.	SHEET NO.	TOTAL SHEETS
	NEW YORK	F-287-2 (63) F-690-3 (23)	200	290

INTERSTATE ROUTE CONNECTION 570
ERICKSON STREET TO SYRACUSE CITY LINE

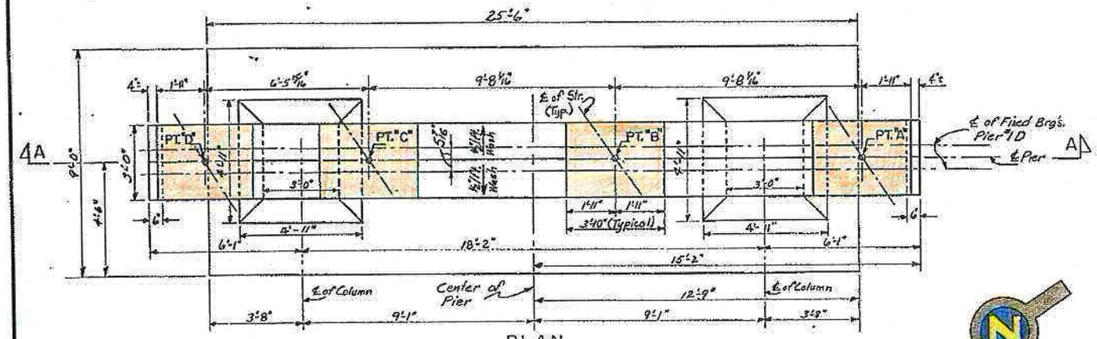

PLAN
SCALE: 3/8"=1'-0"

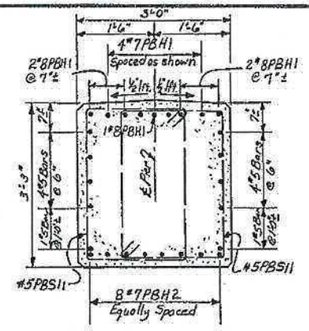

SECTION C-C
SCALE: 3/4"=1'-0"

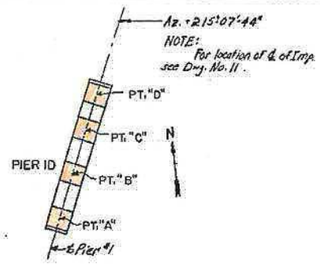

LAYOUT WESTBOUND PIER ID
NO SCALE

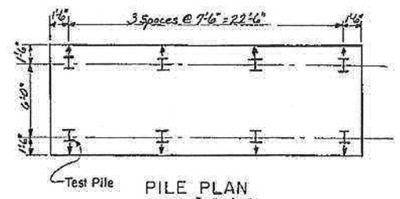

PILE PLAN
SCALE: 3/16"=1'-0"

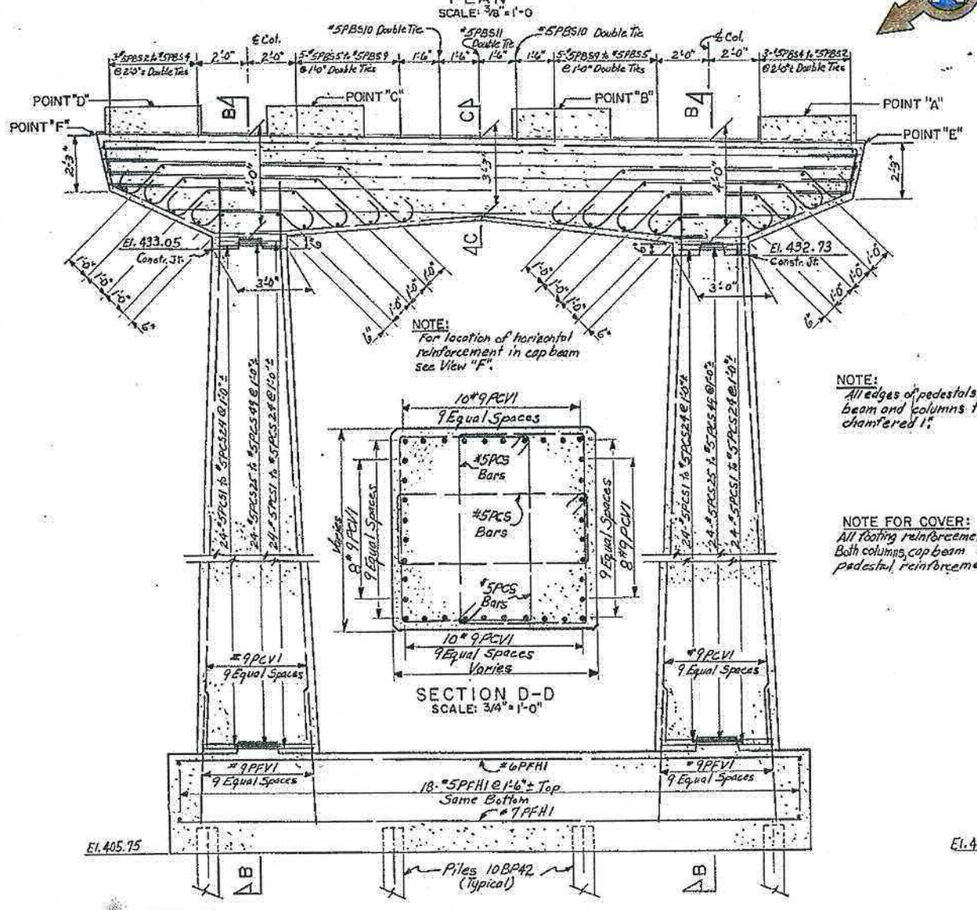

ELEVATION SECTION A-A
SCALE: 3/8"=1'-0"

SECTION D-D
SCALE: 3/4"=1'-0"

NOTE:
All edges of pedestals, cap beam and columns to be chamfered 1".

NOTE FOR COVER:
All footing reinforcement-3" min. Both columns, cap beam and pedestal reinforcement-2" min.

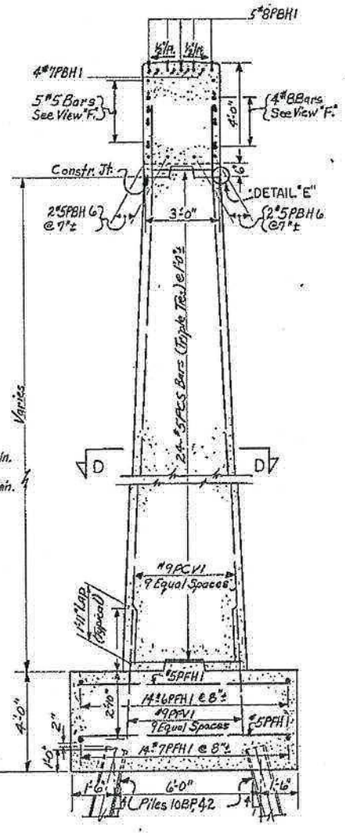

SECTION B-B
SCALE: 3/8"=1'-0"

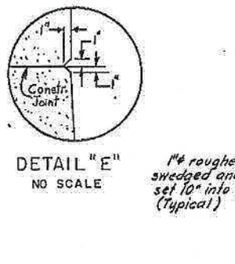

DETAIL "E"
NO SCALE

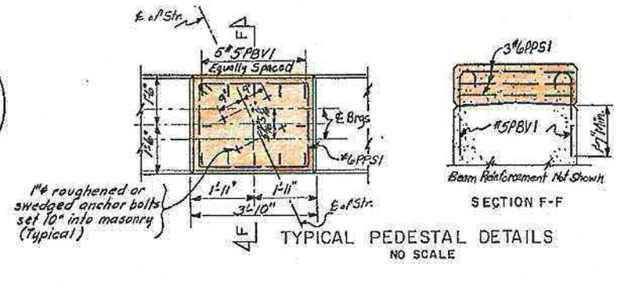

SECTION F-F

TYPICAL PEDESTAL DETAILS
NO SCALE

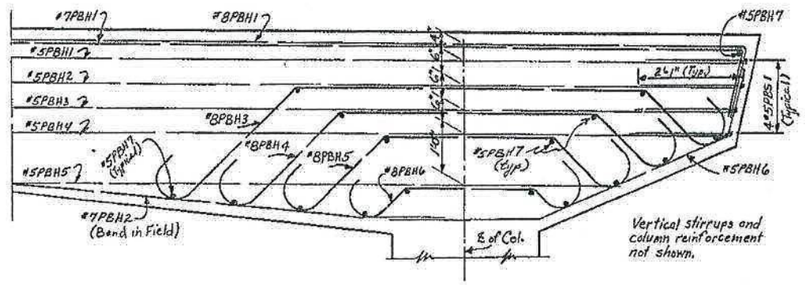

VIEW -"F"
HORIZONTAL CAP BEAM REINFORCEMENT
SCALE: 3/4"=1'-0"

POINT		PIER ID
		PIER
A	El.	438.13
	Sta.	3301.664
	Offset	-47.644
B	El.	438.33
	Sta.	3305.841
	Offset	-56.439
C	El.	438.52
	Sta.	3309.801
	Offset	-65.238
D	El.	438.65
	Sta.	3312.452
	Offset	-71.147
E	El.	437.13
F	El.	437.65

Note:
+ Indicates offset to the right.
- Indicates offset to the left

PROJECT ENGINEER A. KAROLAK
IN CHARGE OF L.H. TURNER
DESIGNED BY M.S. & K.V.
DESIGN CHECKED BY M.S. & R.P.
DETAILED BY
DETAIL CHECKED BY

BR. NO. 1
I-690 OVER NEW YORK CENTRAL R.R.
ERICKSON ST. TO SYRACUSE CITY LINE
E.W. 33+10.33 = R.R. 6+00.66

PIERS (4 OF 4)

DRAWING NO. 14 OF 23

F.I.S.H. 68-4 F.I.S.H. 68-5 F.I.S.H. 68-6

FED. RD. REG. NO.	STATE	FEDERAL AID PROJECT NO.	SHEET NO.	TOTAL SHEETS
	NEW YORK	I-281-2 (103) I-690-3 (23)	207	290

INTERSTATE ROUTE CONNECTION 570
ERICKSON STREET TO SYRACUSE CITY LINE

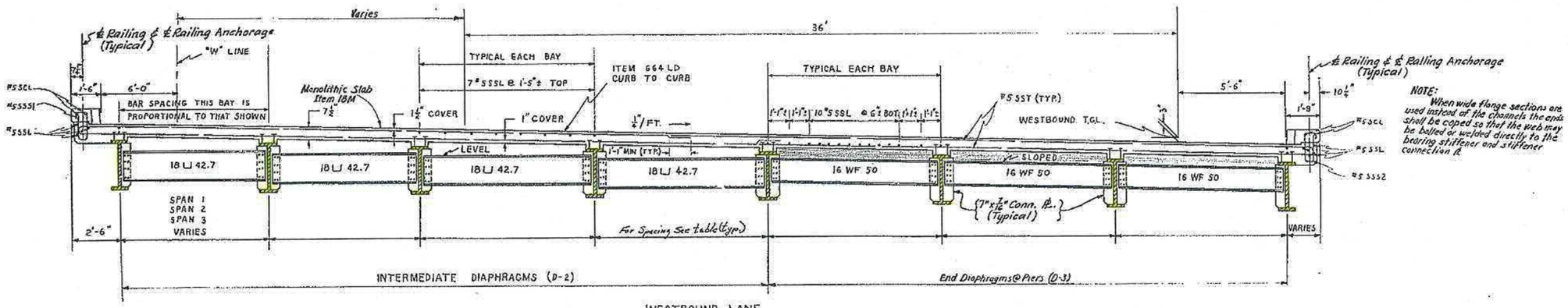

NOTE:
When wide flange sections are used instead of the channels the ends shall be coped so that the web may be bolted or welded directly to the bearing stiffener and stiffener connection ℞

WESTBOUND LANE
SCALE 3/8" = 1'-0"

PERPENDICULAR BEAM SPACING	
WESTBOUND LANE	
SPAN	DIMENSION
1	8'-9"
2	8'-9½"
3	8'-10½"

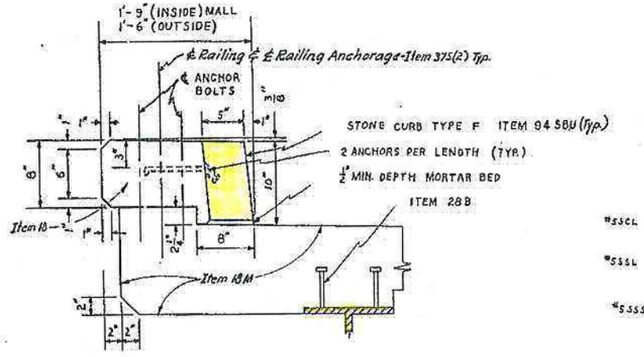

FASCIA DETAIL
SCALE 1½" = 1'-0"
reinforcement not shown

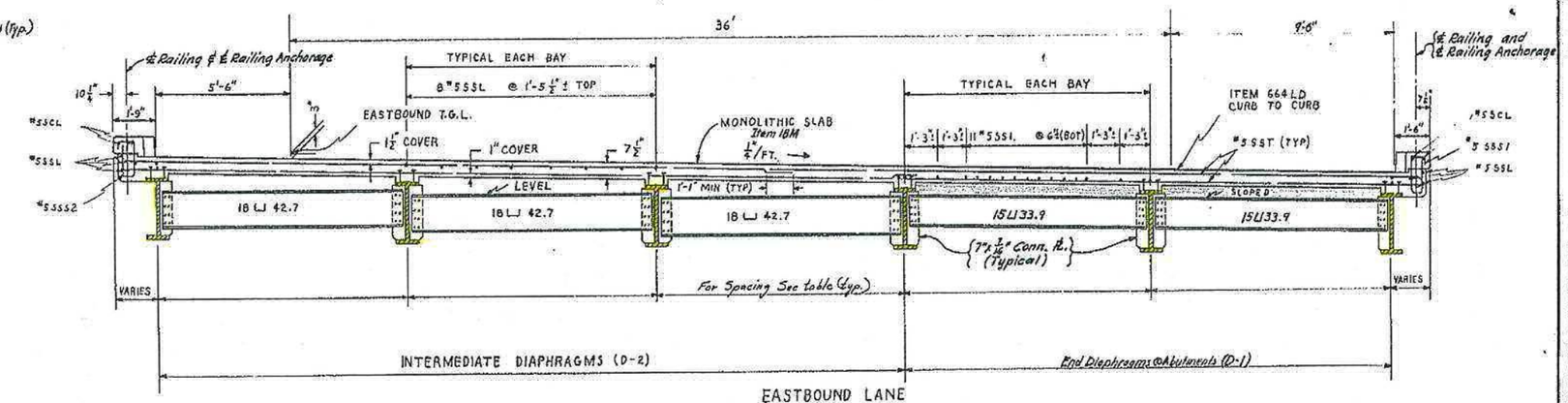

EASTBOUND LANE
SCALE 3/8" = 1'-0"

PERPENDICULAR BEAM SPACING	
EASTBOUND LANE	
SPAN	DIMENSION
1	10'-2"
2	10'-3⅛"
3	10'-3½"

PROJECT ENGINEER A. KEROLAK
IN CHARGE OF L.H. TURNER
DESIGNED BY L.H. TURNER
DESIGN CHECKED BY R.H. PERRY
DETAILED BY W.J. LEMLER
DETAIL CHECKED BY R.H. Perry

BR. NO. 1
I-690 OVER NEW YORK CENTRAL R.R.
ERICKSON ST. TO SYRACUSE CITY LINE
E.W. 33+10.53 = R.R. 8+00.66

SUPERSTRUCTURE (1 OF 4)

DRAWING NO. 15 OF 23

FED. RD. REG. NO.	STATE	FEDERAL AID PROJECT NO.	SHEET NO.	TOTAL SHEETS
	NEW YORK	F-281-2 (103) F-690-3 (23)	20881	290

INTERSTATE ROUTE CONNECTION 570
ERICKSON STREET TO SYRACUSE CITY LINE

BEAM AZIMUTHS	
BEAM NO.	AZIMUTH
1,15,~~26~~ 29	98°49'55.0"
2-8	99°54'24.5"
9-14	99°24'40.9"
16-22	100°38'40.5"
23-28	100°34'43.0"
30-36	101°22'56.6"
37-42	101°09'41.1"

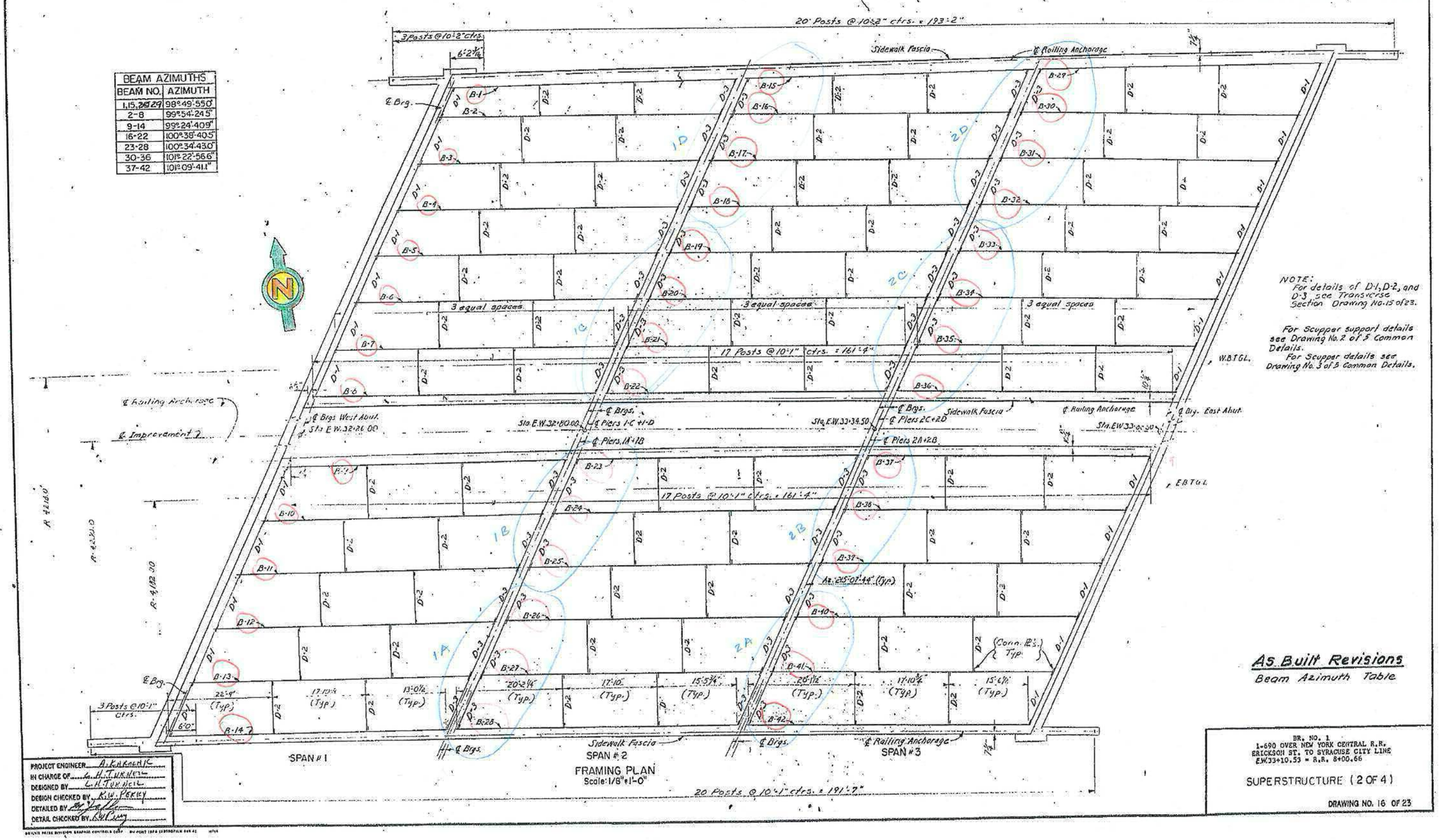

FRAMING PLAN
Scale: 1/8" = 1'-0"

NOTE:
For details of D-1, D-2, and D-3 see Transverse Section Drawing No. 15 of 23.

For Scupper support details see Drawing No. 2 of 5 Common Details.
For Scupper details see Drawing No. 3 of 5 Common Details.

As Built Revisions
Beam Azimuth Table

PROJECT ENGINEER	A. KARAKAS
IN CHARGE OF	L. H. TURNER
DESIGNED BY	L. H. TURNER
DESIGN CHECKED BY	R. W. PERRY
DETAILED BY	[illegible]
DETAIL CHECKED BY	R. W. [illegible]

BR. NO. 1
I-690 OVER NEW YORK CENTRAL R.R.
ERICKSON ST. TO SYRACUSE CITY LINE
E.W. 33+10.53 = B.R. 8+00.66

SUPERSTRUCTURE (2 OF 4)

DRAWING NO. 16 OF 23

D256745

FED. ROAD REG. NO.	STATE	FEDERAL AID PROJECT NO.	SHEET NO.	TOTAL SHEETS
1	N.Y.		39	72

INTERSTATE JOINT REPLACEMENT PROJECT
ONONDAGA COUNTY
P.I.N. 3803.63

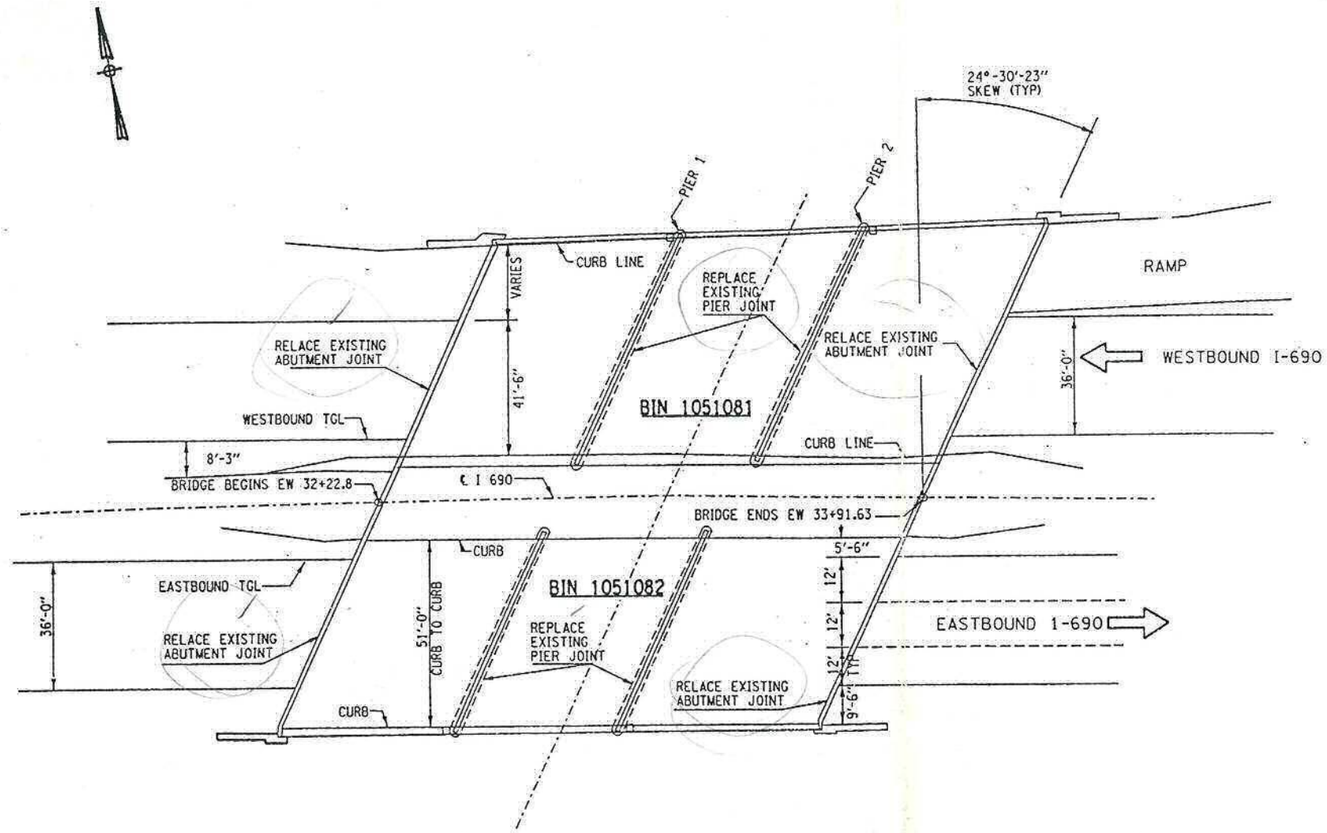

I-690 OVER CONRAIL
PLAN VIEW

NOTE:
FOR JOINT INFORMATION
SEE DWG. JT-1 TO DWG. JT-3

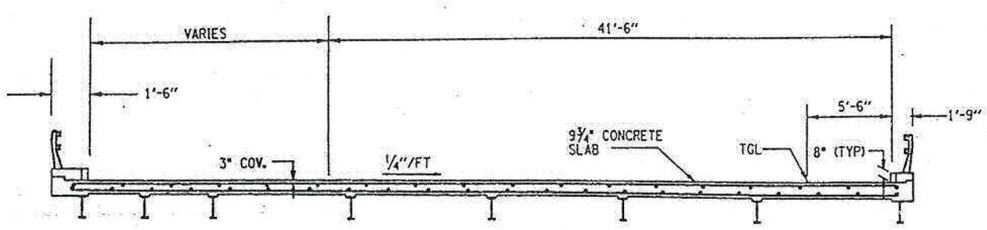

I-690 OVER CONRAIL
TRANSVERSE SECTION - WESTBOUND LANE

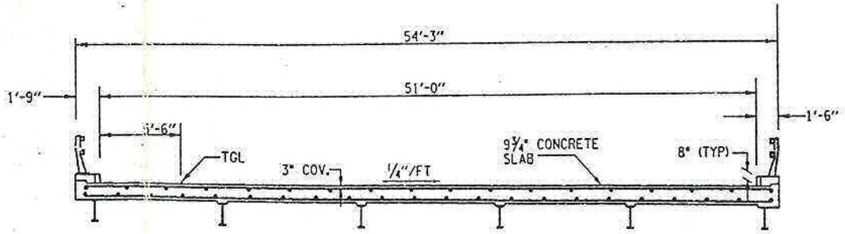

I-690 OVER CONRAIL
TRANSVERSE SECTION - EASTBOUND LANE

BIN 1051081
BIN 1051082

AS-BUILT REVISIONS

Completion 11-30-96

SIGNATURE DATE

PLAN & CROSS SECTION
BIN 1051081, BIN 1051082

STATE OF NEW YORK
DEPARTMENT OF TRANSPORTATION

DRAWING NO.	SCALE	DATE	REGION	SHEET NO.
B-5	NONE	7/95	3	39

DATE
CHECKED BY
DRAFTED BY CADD
CHECKED BY
ESTIMATED BY
CHECKED BY
DESIGNED BY
IN CHARGE OF

D256745

FED. ROAD REG. NO.	STATE	FEDERAL AID PROJECT NO.	SHEET NO.	TOTAL SHEETS
1	N.Y.		62	72

INTERSTATE JOINT REPLACEMENT PROJECT
ONONDAGA COUNTY
P.I.N. 3803.63

DRAFTED BY CADD — DATE
CHECKED BY
ESTIMATED BY
CHECKED BY
DESIGNED BY
IN CHARGE OF

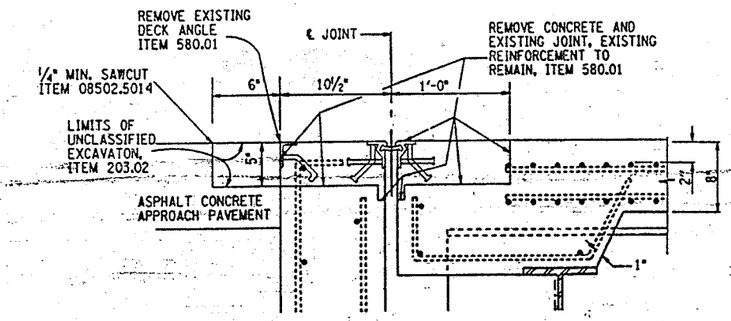

EXISTING ABUTMENT JOINT

BIN 1051081 - BOTH ABUTS
BIN 1051082 - BOTH ABUTS
BIN 1051120 - SOUTH ABUT
BIN 1051149 - BOTH ABUTS
BIN 1051159 - BOTH ABUTS
BIN 1064691 - EAST ABUT
BIN 1064692 - EAST ABUT
BIN 1053969 - EAST ABUT
BIN 1093530 - SOUTH ABUT

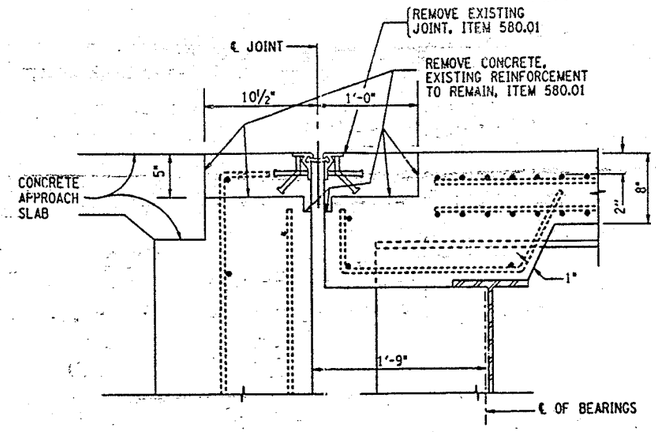

EXISTING ABUTMENT JOINT

BIN 1053881 - SOUTH ABUT
BIN 1064691 - WEST ABUT
BIN 1064692 - WEST ABUT

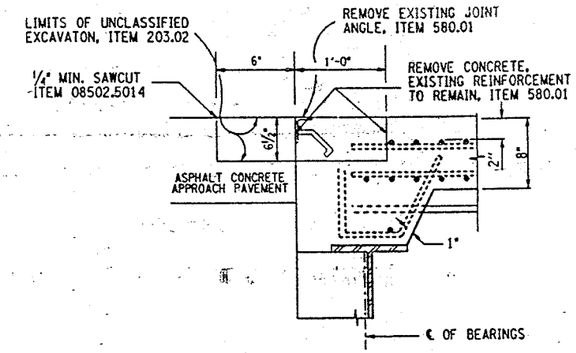

EXISTING ABUTMENT JOINT

BIN 1051120 - SOUTH ABUT

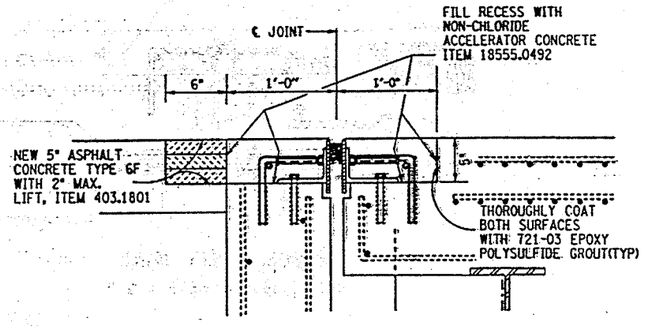

PROPOSED ABUTMENT JOINT

BIN 1051081 - BOTH ABUTS
BIN 1051082 - BOTH ABUTS
BIN 1051120 - SOUTH ABUT
BIN 1051149 - BOTH ABUTS
BIN 1051159 - BOTH ABUTS
BIN 1064691 - EAST ABUT
BIN 1064692 - EAST ABUT
BIN 1053969 - EAST ABUT
BIN 1093530 - SOUTH ABUT

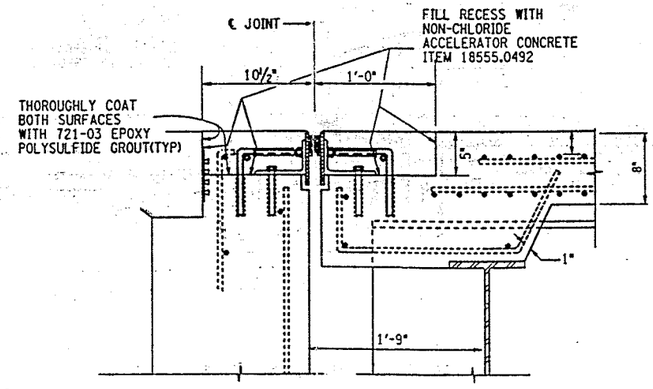

PROPOSED ABUTMENT JOINT

BIN 105388[illegible] - SOUTH ABUT
BIN 106469[illegible] - WEST ABUT
BIN 1064692 - WEST ABUT

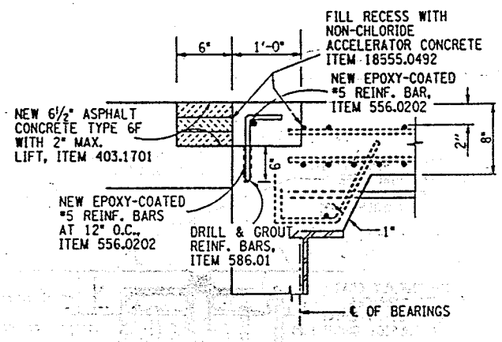

PROPOSED ABUTMENT JOINT

BIN 1051120 - NORTH ABUT

AS-BUILT REVISIONS

SIGNATURE — DATE

JOINT REPLACEMENT DETAILS

STATE OF NEW YORK
DEPARTMENT OF TRANSPORTATION

DRAWING NO.	SCALE	DATE	REGION	SHEET NO.
J-6	NONE	7/95	3	62

D256745

FED. ROAD REG. NO.	STATE	FEDERAL AID PROJECT NO.	SHEET NO.	TOTAL SHEETS
1	N.Y.		58	72

INTERSTATE JOINT REPLACEMENT PROJECT
ONONDAGA COUNTY
P.I.N. 3803.63

DATE
CHECKED BY
ESTIMATED BY
CHECKED BY
DESIGNED BY
CHECKED BY
IN CHARGE OF
MAILED BY CADD

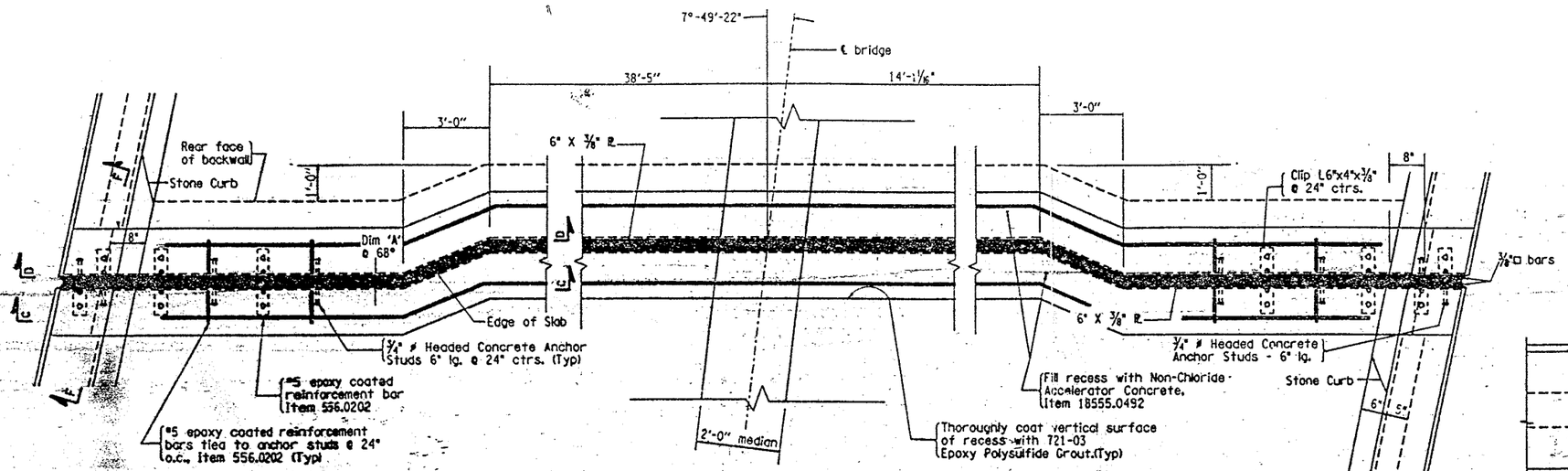

NOTES:

FOR CROSS SECTION VIEWS OF JOINTS, SEE DWGS. J-4 TO J-9

FOR SECTIONS C-C, D-D, F-F, AND I-I SEE DWG J-10

FOR MEDIAN DETAILS, SEE DWG J-13

PROPOSED ABUTMENT JOINT

BIN 1053969 - EAST ABUT

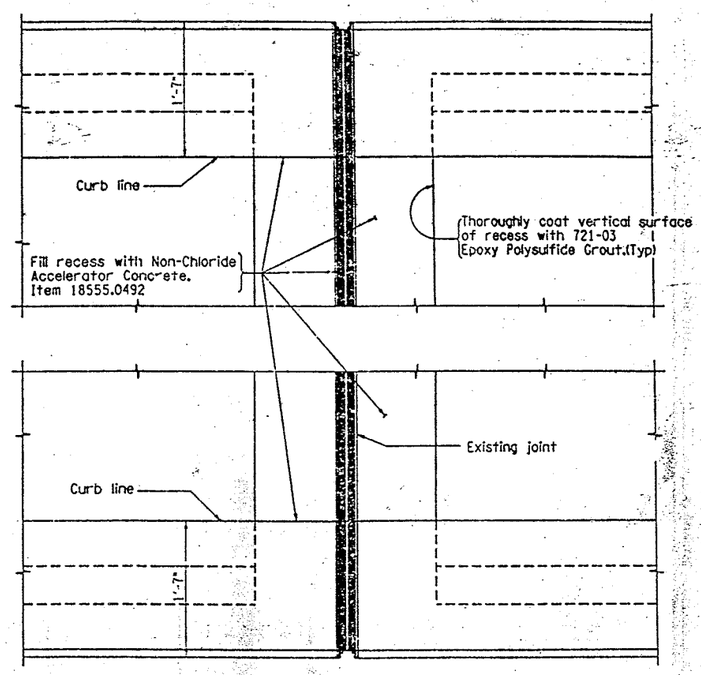

PROPOSED JOINT

BIN 1071341 - PIERS 3, 6, 9
BIN 1071341 - NORTH ABUT
BIN 1071342 - BOTH ABUTS
BIN 1071342 - PIERS 1, 2, 4, 6, 9

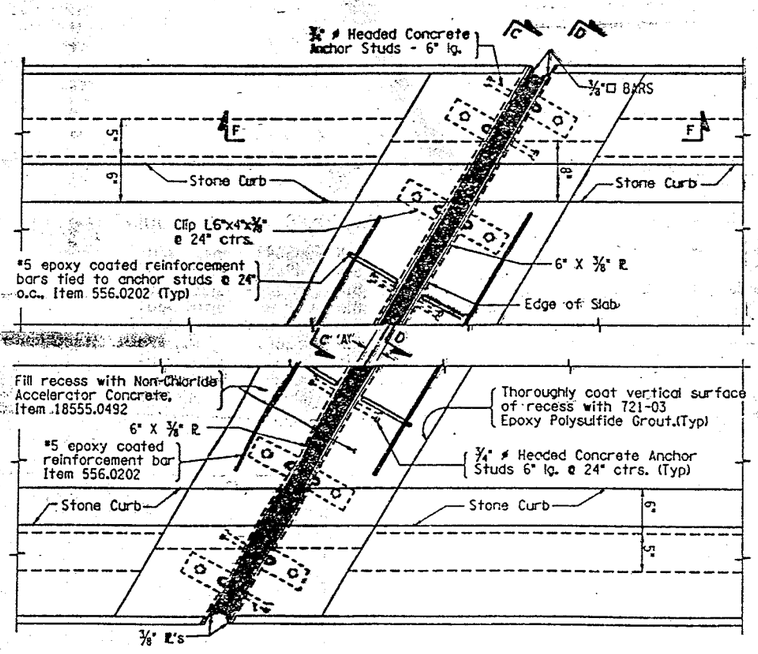

PROPOSED PIER JOINT

BIN 1049659 - PIERS 1,2
BIN 1051081 - PIERS 1,2
BIN 1051082 - PIERS 1,2
BIN 1064691 - PIERS 1,
BIN 1064692 - PIERS 1,

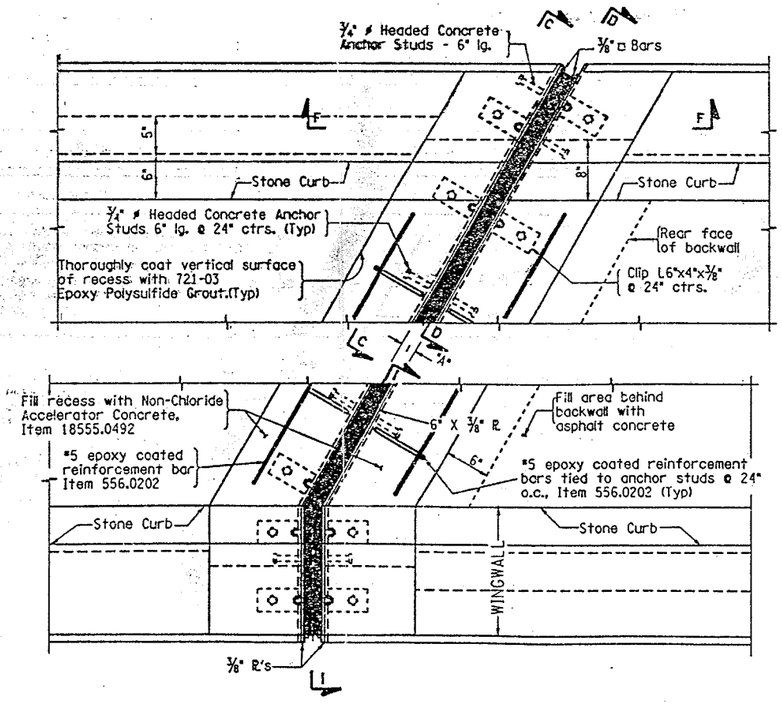

PROPOSED ABUTMENT JOINT

BIN 1051081 - BOTH ABUTS
BIN 1051082 - BOTH ABUTS

AS-BUILT REVISIONS

SIGNATURE DATE

BRIDGE JOINT DETAILS
PLAN VIEWS

STATE OF NEW YORK
DEPARTMENT OF TRANSPORTATION

DRAWING NO.	SCALE	DATE	REGION	SHEET NO.
J-2	NONE	7/95	3	58

BIN: 1051081
I690 WB / CSX TRANS/PEAT ST.

PIER 1 (D) DETERIORATION SKETCH

NOT TO SCALE

* NOTE: P1 LT & P4 RT VIEWS LOCATED ON PIER 1 (D) DETERIORATION SKETCH SHEET 2 OF 2

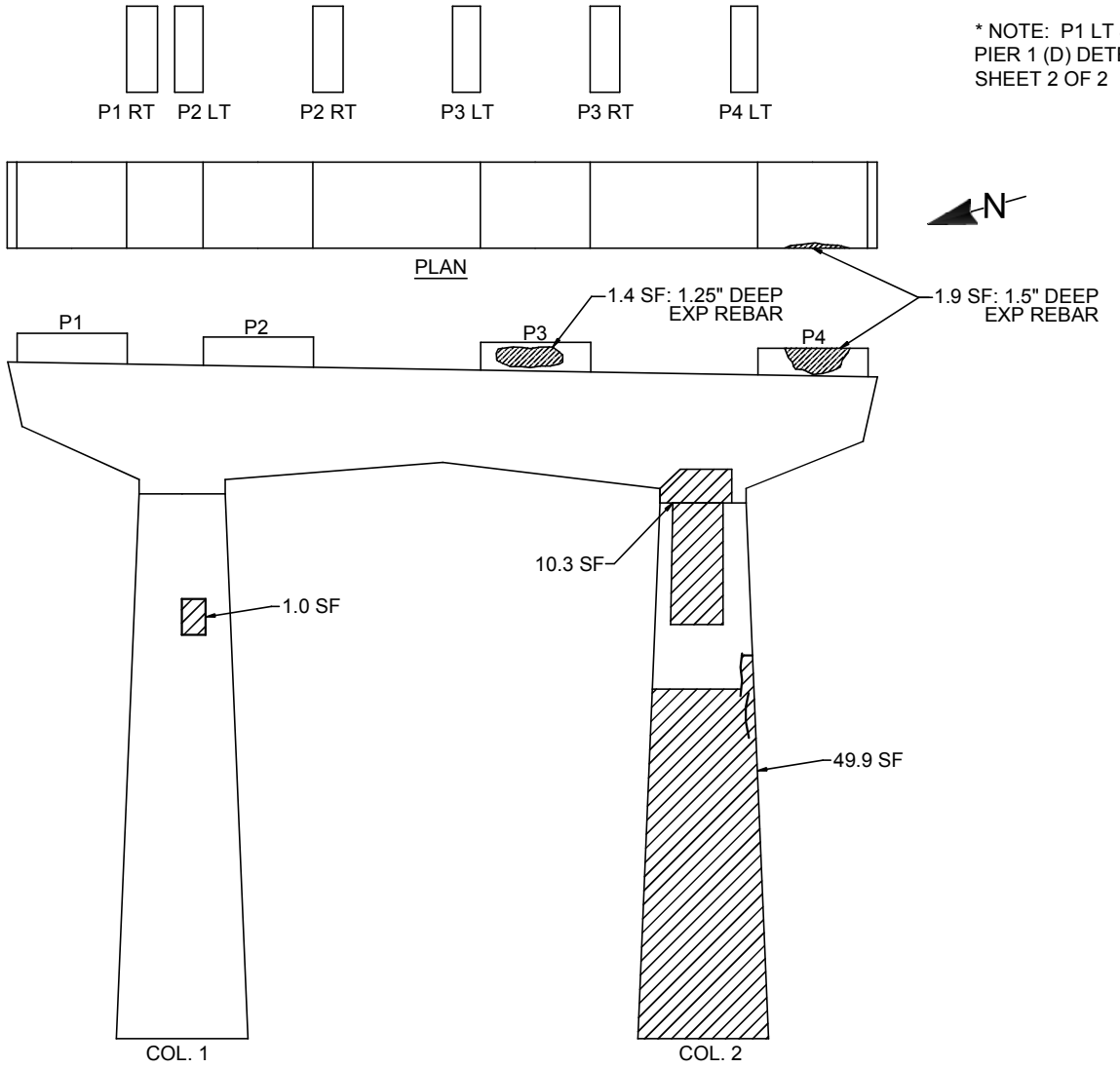

LEGEND

- Hollow Concrete
- Spall
- Crack
- Hairline Crack

BIN: 1051081
I690 WB / CSX TRANS/PEAT ST.

PIER 1 (D) DETERIORATION SKETCH

NOT TO SCALE

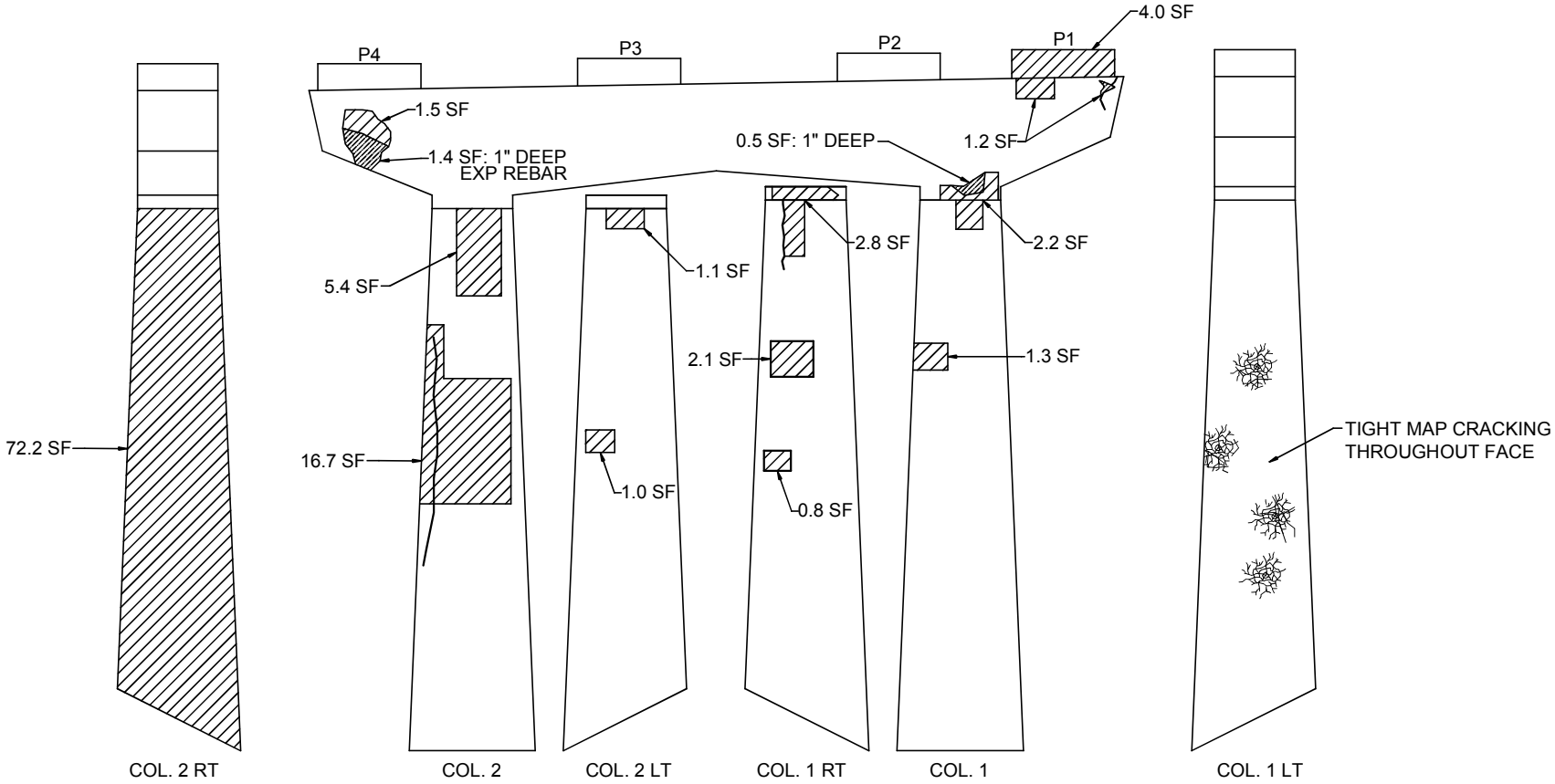

PIER 1 END LEFT ELEVATION

LEGEND
Hollow Concrete
Spall
Crack
Hairline Crack

BIN: 1051081
I690 WB / CSX TRANS/PEAT ST.

PIER 1 (C) DETERIORATION SKETCH

NOT TO SCALE

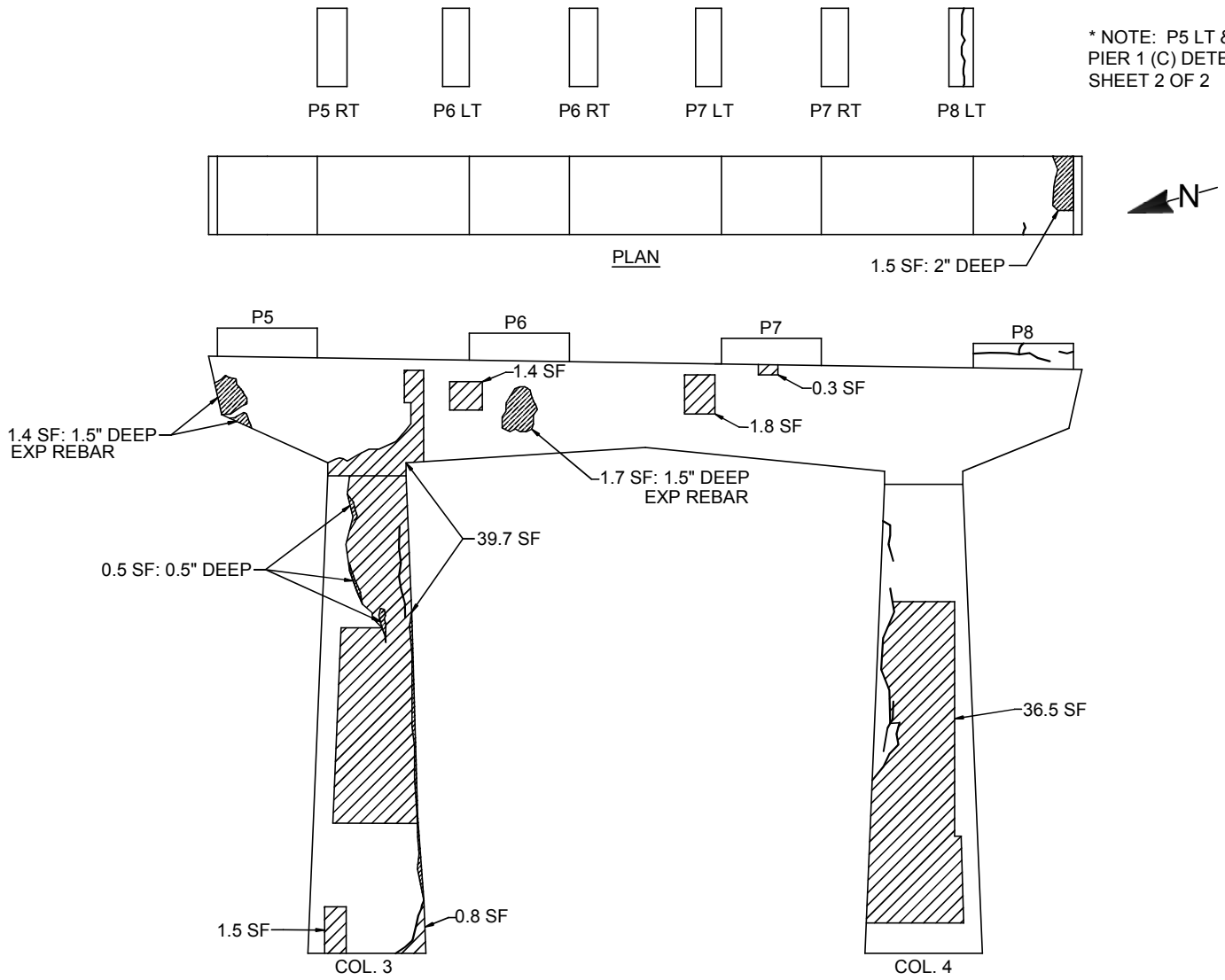

BIN: 1051081
I690 WB / CSX TRANS/PEAT ST.

PIER 1 (C) DETERIORATION SKETCH

NOT TO SCALE

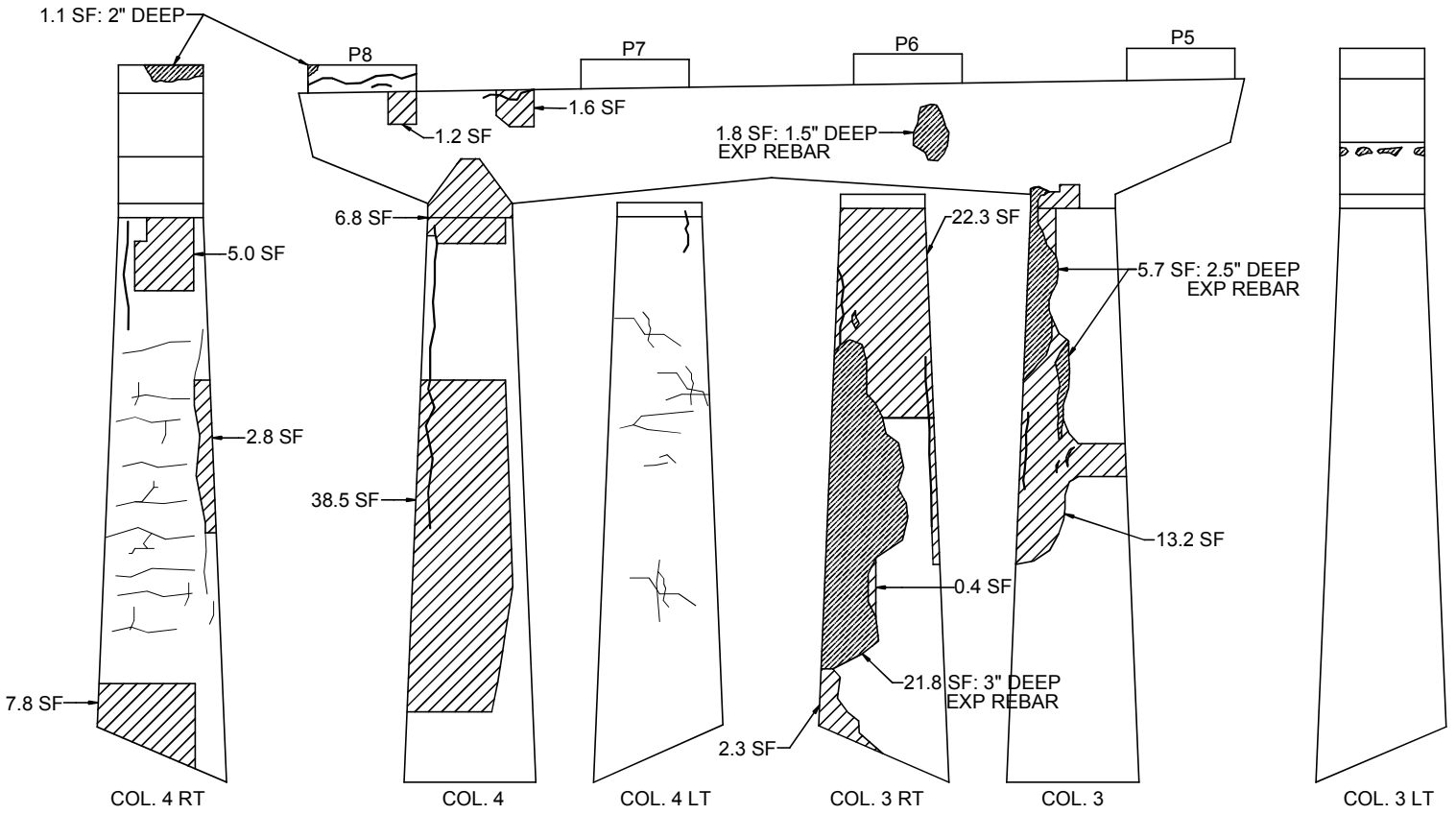

PIER 1 END RIGHT ELEVATION

LEGEND
Hollow Concrete
Spall
Crack
Hairline Crack

BIN: 1051081
I690 WB / CSX TRANS/PEAT ST.

PIER 2 (D) DETERIORATION SKETCH

NOT TO SCALE

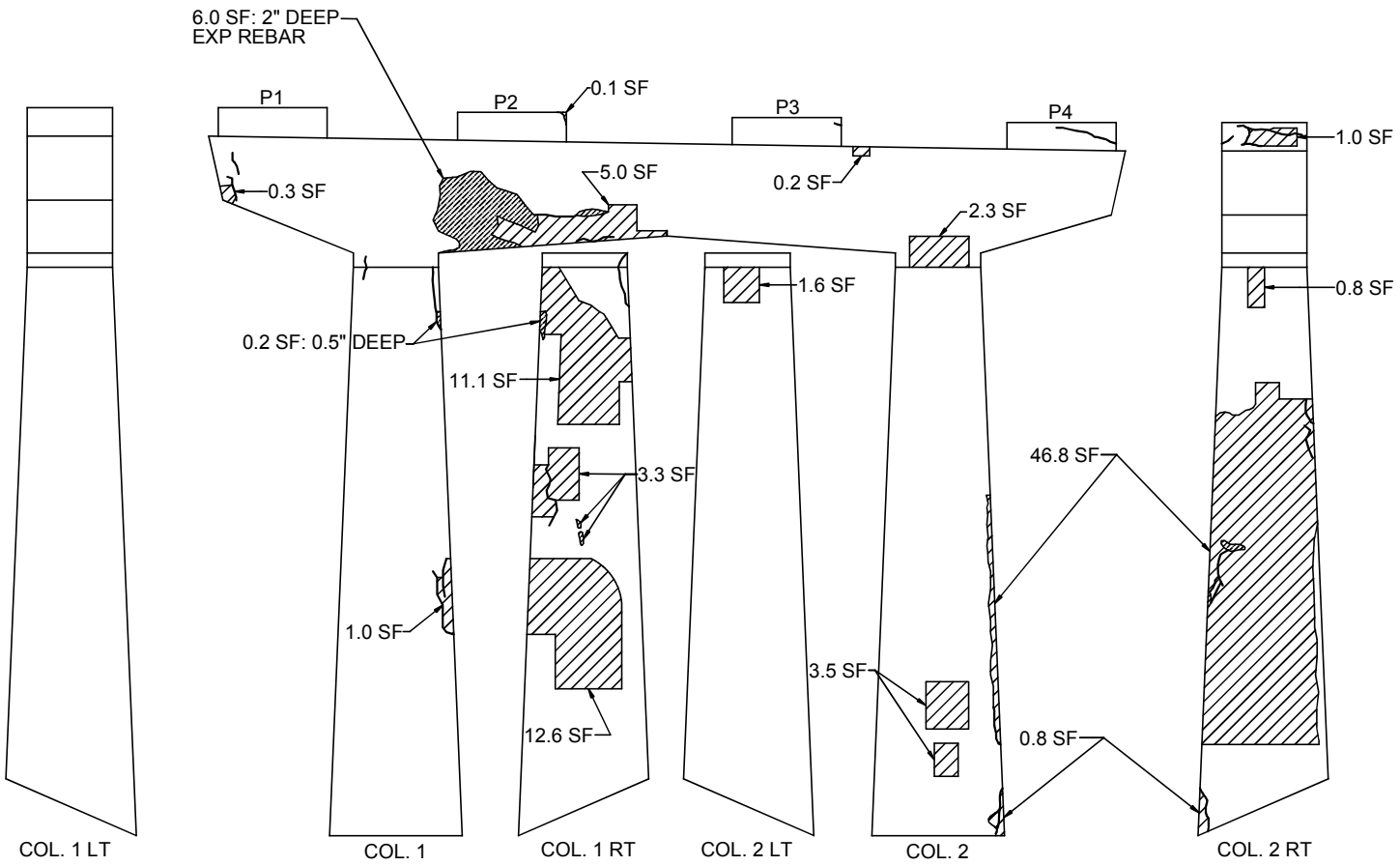

PIER 2 BEGIN LEFT ELEVATION

LEGEND
Hollow Concrete
Spall
Crack
Hairline Crack

BIN: 1051081
I690 WB / CSX TRANS/PEAT ST.

PIER 2 (D) DETERIORATION SKETCH

NOT TO SCALE

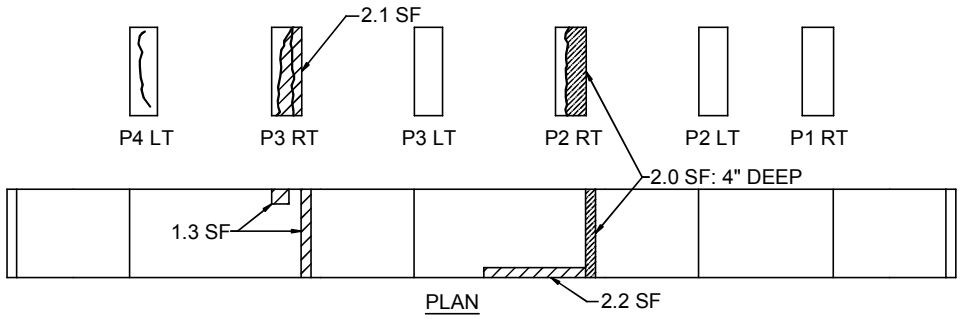

PLAN

* NOTE: P1 LT & P4 RT VIEWS LOCATED ON PIER 2 (D) DETERIORATION SKETCH SHEET 1 OF 2

N

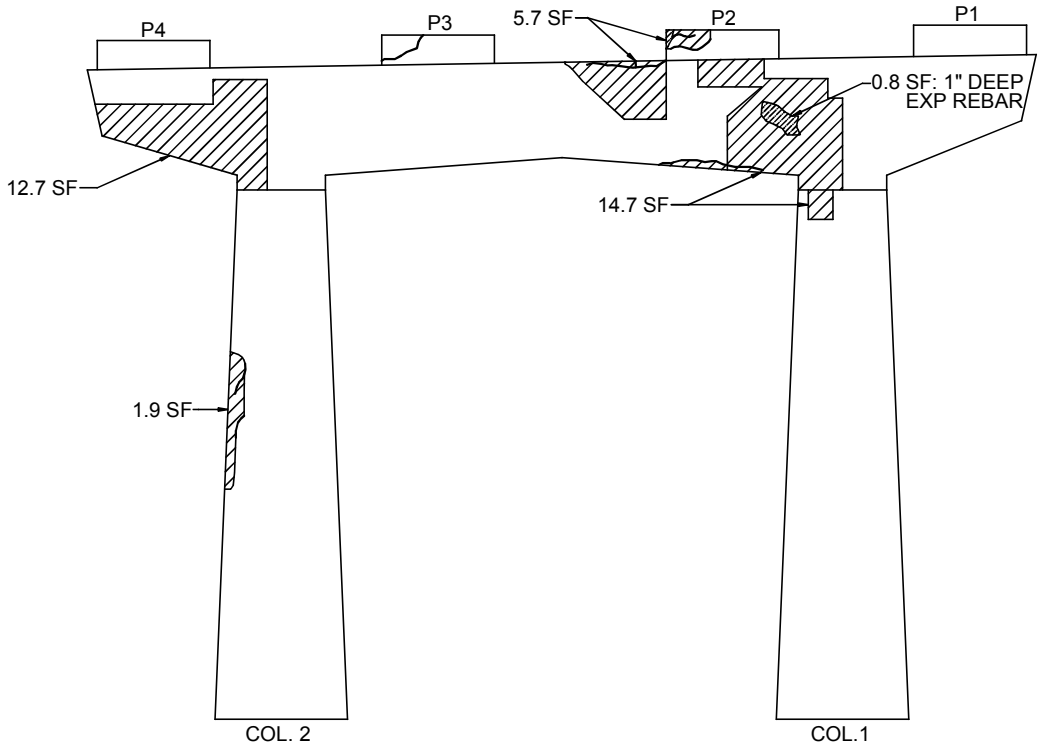

PIER 2 END LEFT ELEVATION

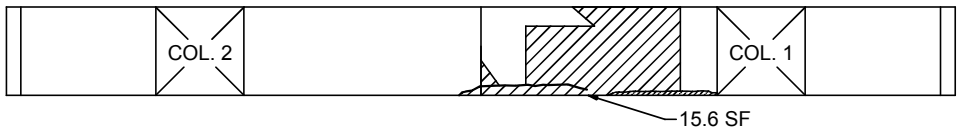

UNDERSIDE OF CAPBEAM

LEGEND

- Hollow Concrete
- Spall
- Crack
- Hairline Crack

BIN: 1051081
I690 WB / CSX TRANS/PEAT ST.

PIER 2 (C) DETERIORATION SKETCH

NOT TO SCALE

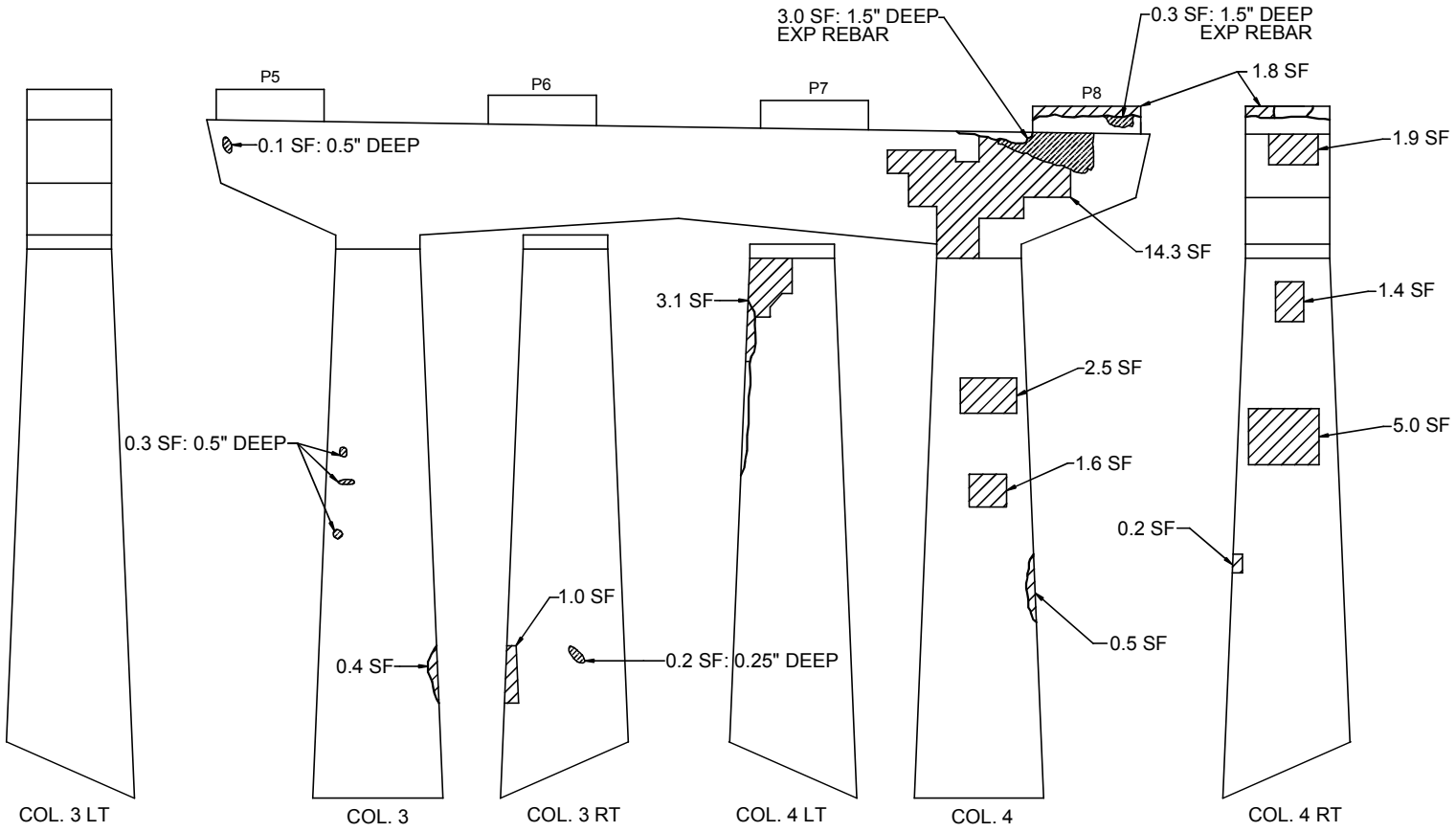

PIER 2 BEGIN RIGHT ELEVATION

LEGEND
Hollow Concrete
Spall
Crack
Hairline Crack

BIN: 1051081
I690 WB / CSX TRANS/PEAT ST.

PIER 2 (C) DETERIORATION SKETCH

NOT TO SCALE

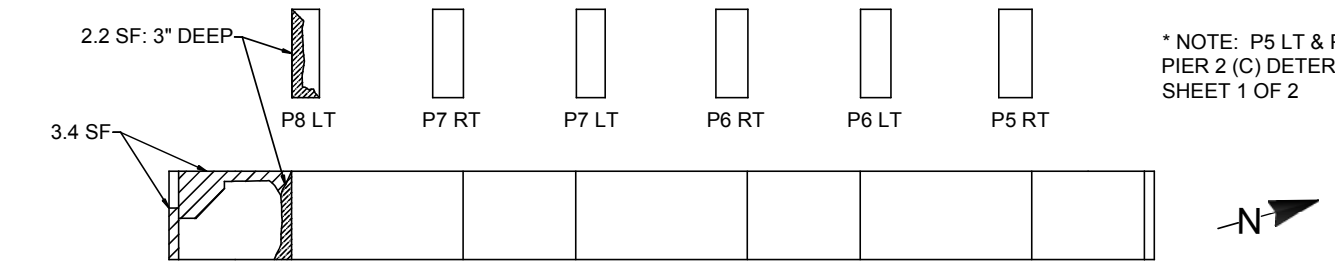

* NOTE: P5 LT & P8 RT VIEWS LOCATED ON PIER 2 (C) DETERIORATION SKETCH SHEET 1 OF 2

N

PLAN

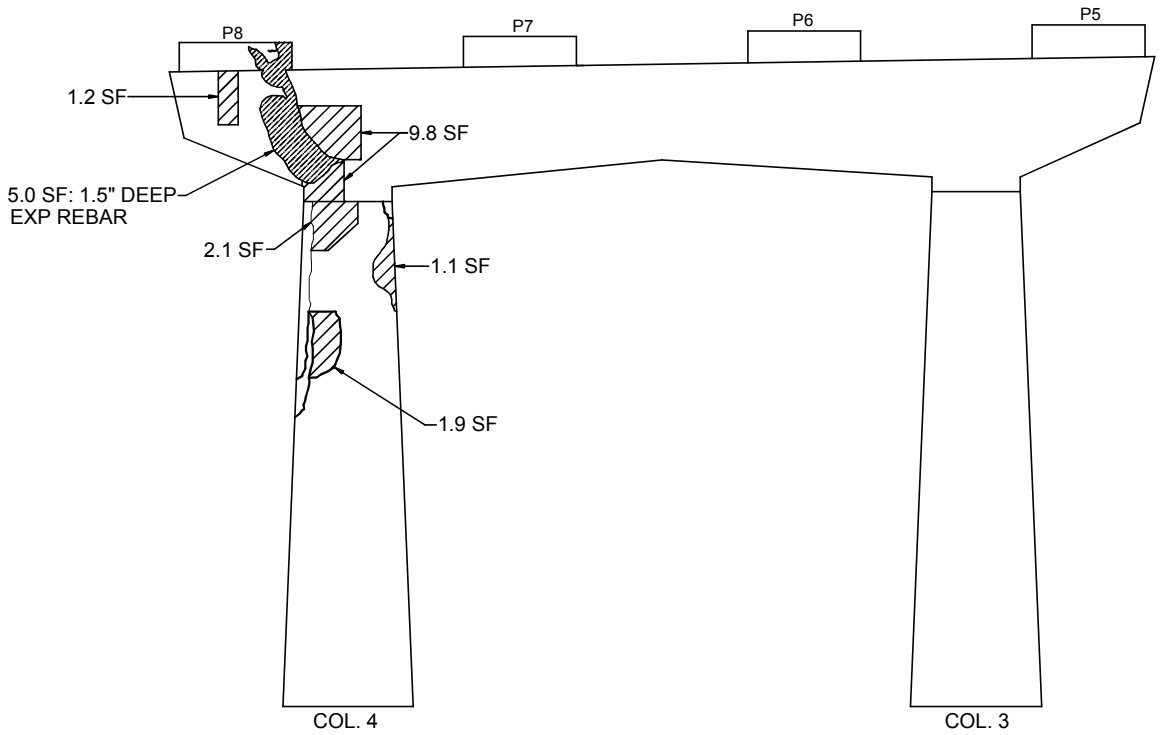

PIER 2 END RIGHT ELEVATION

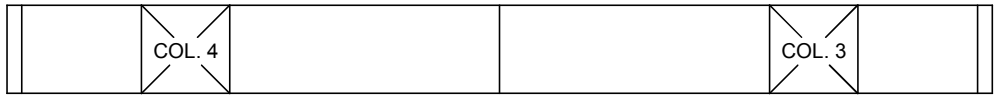

UNDERSIDE OF CAPBEAM

LEGEND

- Hollow Concrete
- Spall
- Crack
- Hairline Crack

BIN: 1051081
I-690 WB / CSX TRANS/PEAT ST.

DECK DETERIORATION PLAN

NOT TO SCALE

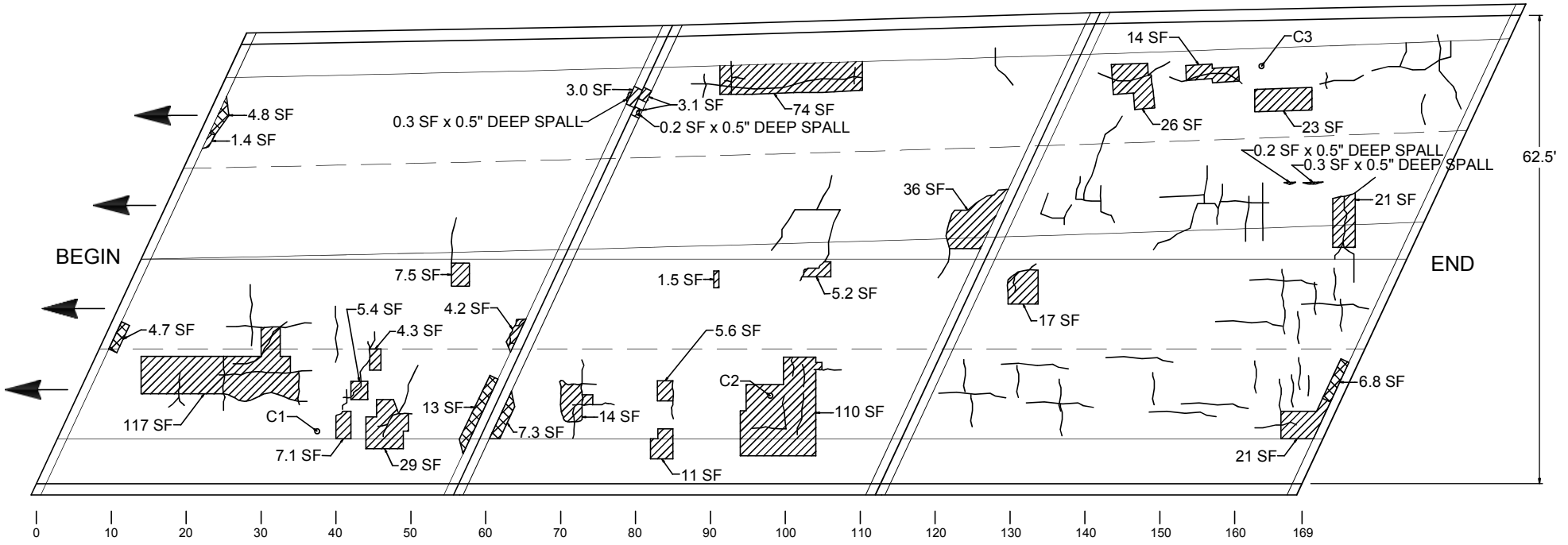

TOTAL DAMAGED AREA EQUALS 599 SF WHICH IS 5.8 % OF DECK SURFACE

LEGEND

- Hollow Concrete
- Patch
- Spall
- Coring location
- Crack

IN-DEPTH PHOTO DOCUMENTATION

BIN: 1051081
I-690 WB / CSX TRANS/PEAT ST.

IN-DEPTH INSPECTION
PHOTO LOCATION PLAN

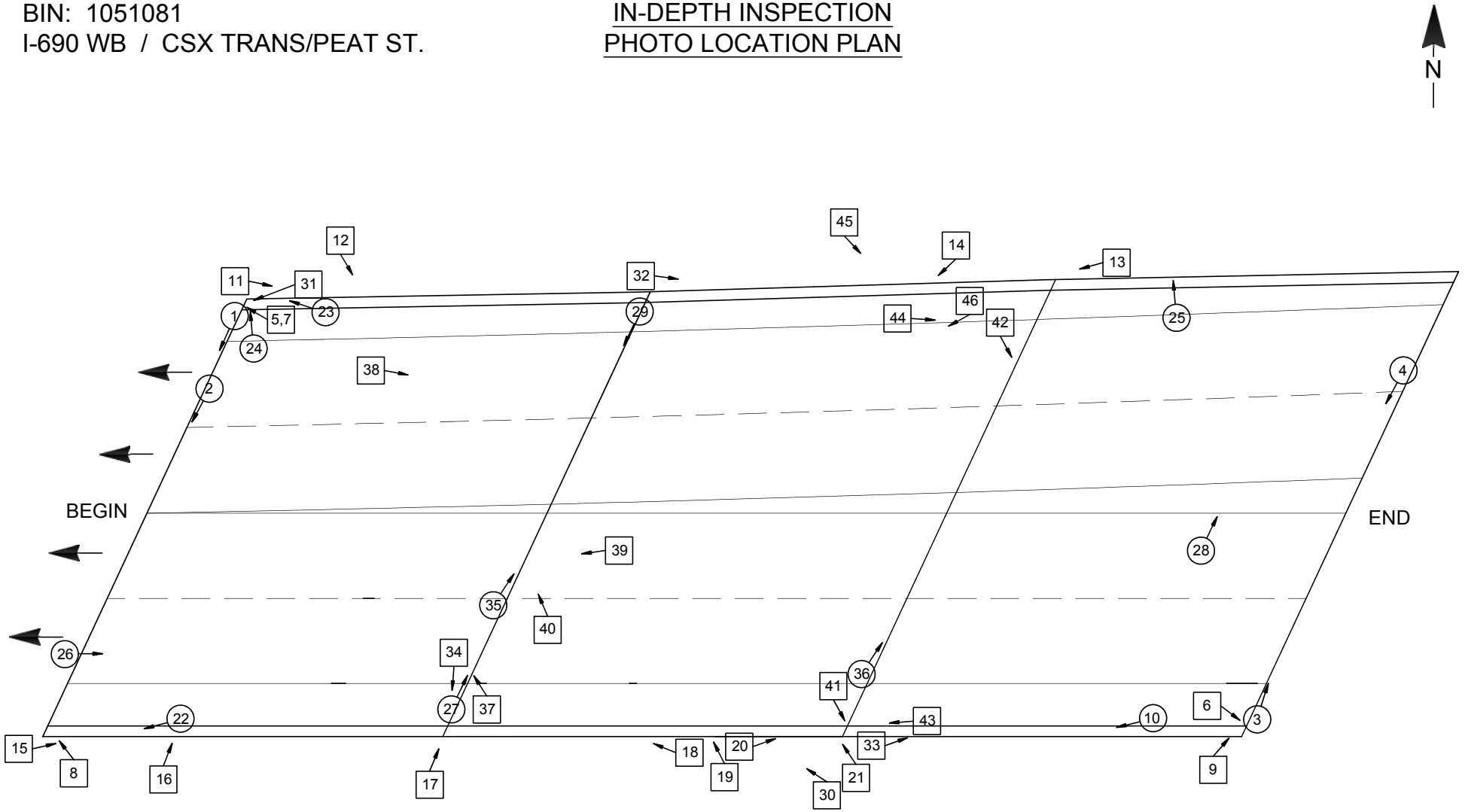



DESCRIPTION: BEGIN JOINT (L-R)

PHOTO 1



DESCRIPTION: BEGIN JOINT LANE 2 (L-R)

PHOTO 2



DESCRIPTION: END JOINT (R-L)

PHOTO 3



DESCRIPTION: END JOINT LANE 2 (L-R)

PHOTO 4



DESCRIPTION: BEGIN BEARING 1 OF 8
(BEARING 8 TYP.)

PHOTO 5



DESCRIPTION: END BEARING 8 OF 8

PHOTO 6



DESCRIPTION: BEGIN PEDESTAL 1 OF 8

PHOTO 7



DESCRIPTION: BEGIN PEDESTAL 8 OF 8

PHOTO 8



DESCRIPTION: END PEDESTAL 8 OF 8

PHOTO 9



DESCRIPTION: RIGHT SAFETY WALK (E-B)

PHOTO 10



DESCRIPTION: SPAN 1 LEFT FASCIA AT BEGIN

PHOTO 11



DESCRIPTION: SPAN 1 LEFT FASCIA AT 15’ & 18’

PHOTO 12



DESCRIPTION: SPAN 2 LEFT FASCIA (E-B)

PHOTO 13



DESCRIPTION: SPAN 2 LEFT FASCIA AT 0.75 SPAN

PHOTO 14



DESCRIPTION: SPAN 1 RIGHT FASCIA AT BEGIN

PHOTO 15



DESCRIPTION: SPAN 1 RIGHT FASCIA AT 20’

PHOTO 16



DESCRIPTION: RIGHT FASCIA AT PIER 1

PHOTO 17



DESCRIPTION: SPAN 2 RIGHT FASCIA 27' FROM END

PHOTO 18



DESCRIPTION: SPAN 2 RIGHT FASCIA 18’ FROM END

PHOTO 19



DESCRIPTION: SPAN 2 RIGHT FASCIA 10’ FROM END

PHOTO 20



DESCRIPTION: RIGHT DECK AT PIER 2

PHOTO 21



DESCRIPTION: RIGHT BRIDGE RAIL BETWEEN POSTS 2 & 3 (E-B)

PHOTO 22



DESCRIPTION: LEFT BRIDGE RAIL BETWEEN POSTS 1 & 2 (E-B)

PHOTO 23



DESCRIPTION: BEGIN LEFT POST AT BRIDGE

PHOTO 24



DESCRIPTION: LEFT POST 13 TOP RAIL CONNECTION

PHOTO 25



DESCRIPTION: BEGIN DECK RIGHT LANE

PHOTO 26



DESCRIPTION: SPAN 1 JOINT (R-L)

PHOTO 27



DESCRIPTION: SPAN 3 LANE 2 (R-L)

PHOTO 28



DESCRIPTION: SPAN 1 JOINT (L-R)

PHOTO 29



DESCRIPTION: RIGHT FASCIA SPAN 2 (E-B)

PHOTO 30



DESCRIPTION: BEGIN BACKWALL TOP LEFT

PHOTO 31



DESCRIPTION: SPAN 2 LEFT (B-E)

PHOTO 32



DESCRIPTION: RIGHT FASCIA SPAN 3 (B-E)

PHOTO 33



DESCRIPTION: PIER 1 BAY 7 (L-R)

PHOTO 34



DESCRIPTION: SPAN 1 JOINT (R-L)

PHOTO 35



DESCRIPTION: SPAN 2 JOINT CENTER RIGHT LANE

PHOTO 36



DESCRIPTION: PIER 1 BEARING 7

PHOTO 37



DESCRIPTION: PIER 1 BEGIN LEFT

PHOTO 38



DESCRIPTION: PIER 1 END FACE AT COLUMN 3

PHOTO 39



DESCRIPTION: PIER 1 AT COLUMN 3 (R-L)

PHOTO 40



DESCRIPTION: PIER 2 BEARING 8 LEFT

PHOTO 41



DESCRIPTION: PIER 2 BEARING 2 LEFT

PHOTO 42



DESCRIPTION: PIER 2 RIGHT END FACE

PHOTO 43



DESCRIPTION: PIER 2 LEFT BEGIN FACE

PHOTO 44



DESCRIPTION: PIER 2 LEFT BEGIN FACE

PHOTO 45



DESCRIPTION: FRAMING SPAN 2 FROM END LEFT

PHOTO 46

ASBESTOS SAMPLING SURVEY

NOT AVAILABLE FOR THIS BRIDGE

LATEST BIENNIAL INSPECTION REPORT

Inspection Date: 6/20/2013 RC: 33 BIN: 1051081

Bridge Ratings

Carried: 690I 690I33012057 Crossed: CSX TRANS/PEAT ST CheckValue: 1,828,601,188

Inspection Agency: 13 - Consultant Type of Inspection: 1 - BIENNIAL
GTMS: 302 -- Steel - Stringer/Multi-Beam or Girder
POSTINGS: See Gen Rec Page 1 for Postings at time of inspection.
Further Investigation Needed: No
State Highway Number: 68 04 Milepoint: 5.83 AADT/Yr: 41378 / 2002
Orientation: 3 - East Political Unit: 2055 - City of SYRACUSE Year Built: 1971
Total Spans: 3 Ramp Bridge Attached To Span: NA BIN: NA
General Recommendation: 5 Computed Condition Rating: 4.500

Abutment Ratings:	Beg Abut	End Abut
Joint with Deck	5	4
Bearings, Bolts, Pads	4	4
Seats and Pedestals	5	4
Backwall	5	5
Stem (Breastwall)	8	8
Erosion or Scour	6	6
Footings	9	9
Piles	9	9
Recommendation	5	5

Wingwall Ratings:	Beg Abut	End Abut
Walls	5	5
Footings	9	9
Erosion or Scour	6	6
Piles	9	9

Channel Ratings:	Channel
Stream Alignment	8
Erosion and Scour	8
Waterway Opening	8
Bank Protection	8

Approach Ratings:	Approaches
Drainage	5
Embankment	6
Settlement	5
Erosion	6
Pavement	6
Guide Railing	5

Number of Flags Issued:

RED: 0 Yellow: 0 Safety: 0

Vulnerability Reviews Recommended: 1=Yes, 2=No, 3=NA, X=NotActive

Hydraulic: 3	Overload: X	Steel: 2
Collision: 2	Concrete: X	Seismic: X

Inspector's Signature: CheckValue: 1,828,601,188 Date: 6/20/2013

James W. Gorzynski,PE () (Inspector ID:3100044)

Signed copy of this inspection report is available in the appropriate NYSDOT Regional Office

Reviewed By: Date: 8/20/2013

Stephen L. Gauthier,PE () (QC ID:3100077)

Signed copy of this inspection report is available in the appropriate NYSDOT Regional Office

Inspection Date: 6/20/2013 RC: 33 BIN: 1051081

Span Ratings

Carried: 690I 690I33012057 Crossed: CSX TRANS/PEAT ST CheckValue: 1,828,601,188

Deck Element Ratings:	001	002	003
Wearing Surface	5	5	5
Curbs	5	5	5
Sidewalks, Fascias	4	4	5
Railings, Parapets	4	5	4
Scuppers	6	8	8
Gratings	8	8	8
Median	8	8	8
Mono Deck Surface	5	5	5

Superstructure Ratings:	001	002	003
Structural Deck	5	5	5
Primary Members	5	5	5
Secondary Members	5	5	5
Paint	4	4	4
Joints	5	5	8
Recommendation	5	5	5

Pier Ratings:	001	002	003
Bearings, Bolts, Pads	5	5	8
Pedestals	3	3	8
Top of Cap or Beam	6	6	8
Stem Solid Pier	8	8	8
Cap Beam	5	4	8
Pier Columns	4	4	8
Footings	9	9	8
Erosion or Scour	6	6	8
Piles	9	9	8
Recommendation	5	5	8

Utility Ratings:	001	002	003
Lighting	8	8	8
Sign Structure	8	8	8
Utilities and Support	8	8	8

Field Notes:

Field Date	Arrival	Departure	Temp (C)	Temp (F)	Weather Conditions
4/1/2013	11:45:00 AM	12:45:00 PM	4	40	Cloudy, Windy
4/23/2013	2:05:00 PM	3:25:00 PM	18	65	Fair
6/20/2013	6:50:00 PM	7:15:00 PM	24	75	Fair

Inspection Date: 6/20/2013 RC: 33 BIN: 1051081

Inspection Notes

Carried: 690I 690I33012057 Crossed: CSX TRANS/PEAT ST CheckValue: 1,828,601,188

Note ID: 3A1310510810000

General Note for Bridge
Referenced Photos:
2013 - CSX Railroad Milepost QC 1.02.

Note ID: 3A1310510810002

Beg Abut -- Abutment: Bearings, Bolts, Pads -- Rated 4, Was 4
End Abut -- Abutment: Bearings, Bolts, Pads -- Rated 4, Was 4
Referenced Photos: "2", "3"
2013 - The bearings supporting Girders G1 & G8 of both abutments (fascia bearings) have rust and corrosion with the slider plates warped upwards from pack rust (Photos 2 & 3). This inhibits proper function of the bearings. Interior bearings are in better condition and would rate '5' alone.

Note ID: 3A1310510810004

Beg Abut -- Wingwalls: Walls -- Rated 5, Was 5
Referenced Photos: "5"
2013 - The front face of the begin left cheek wall has cracking, map cracking, rust staining and a 0.5 square foot area of spalling near the top. The begin right wingwall and cheek wall and remaining areas of the begin left wingwall and cheek wall are in better condition and would rate '6' alone.

Note ID: 3A1310510810005

Span 001 -- Deck Elements: Sidewalks, Fascias -- Rated 4, Was 4
Referenced Photos: "6", "7"
2013 - The right and left fascias in Span 1 have isolated areas of spalling with exposed corroded reinforcement with the right side being worse than the left side (Photos 6 & 7). Remaining areas of sidewalks and fascias in Span 1 would rate '5' alone.

Note ID: 3A1310510810008

Span 001 -- Deck Elements: Railings, Parapets -- Rated 4, Was 5
Span 003 -- Deck Elements: Railings, Parapets -- Rated 4, Was 5
Referenced Photos: "5", "19", "20"
2013 - Isolated areas of the lower rails at both sides of Spans 1 & 3 are severely corroded with significant section loss at rail splices (Photos 5, 19 & 20).
Remaining areas of the bridge rail system in Spans 1 & 3 are in better condition and would rate '5' alone.

Note ID: 3A1310510810009

Span 001 -- Superstructure: Paint -- Rated 4, Was 5
Span 002 -- Superstructure: Paint -- Rated 4, Was 5
Span 003 -- Superstructure: Paint -- Rated 4, Was 5

Inspection Notes

Carried: 690I 690I33012057 Crossed: CSX TRANS/PEAT ST CheckValue: 1,828,601,188

Note ID: 3A1310510810009 - continued

Referenced Photos: "8"
2013 - Both fascia girders in all 3 spans have peeling paint and surface rust, especially in lower areas of the girders. Similar rust and corrosion have occurred on fascia bearings and on superstructure steel beneath joints. The superstructure paint system in remaining areas of all 3 spans is in better condition and would rate '5' alone.

Note ID: 3A131051081000B

Span 001 -- Pier: Pedestals -- Rated 3, Was 4
Referenced Photos: "9"
2013 - The right side of the Pier 1 pedestal at Girder G8 has rust staining and severe spalling with exposed corroded reinforcement. Also, concrete on all 4 sides of this pedestal has horizontal cracking with punky sounding concrete. Remaining pedestals on Pier 1 are in good condition and would rate '5' alone.

Note ID: 3A131051081000E

Span 001 -- Pier: Pier Columns -- Rated 4, Was 4
Referenced Photos: "10"
2013 - Columns 2, 3 & 4 of Pier 1 have hollow sounding concrete with vertical cracks on approximately 30% of the begin, right and end faces. The right face of Column 3 of Pier 1 has severe spalling with exposed corroded reinforcement on approximately 50% of the face. The end face of Column 3 of Pier 1 has severe spalling with exposed corroded reinforcement on an area of approximately 5 square feet. Remaining areas of Pier 1 columns would rate '5' alone.

Note ID: 3A1310510810006

Span 002 -- Deck Elements: Sidewalks, Fascias -- Rated 4, Was 5
Referenced Photos: "11", "12"
2013 - The right and left fascias in Span 2 have isolated areas of cracking, rust staining, efflorescence and spalling with exposed corroded reinforcement (Photos 11 & 12). Remaining areas of sidewalks and fascias in Span 2 would rate '5' alone.

Note ID: 3A131051081000A

Span 002 -- Pier: Bearings, Bolts, Pads -- Rated 5, Was 5
Referenced Photos: "13"
2013 - Pier bearings on Pier 2 are in good condition, but with minor rust.

Inspection Date: 6/20/2013 RC: 33 BIN: 1051081

Inspection Notes

Carried: 690I 690I33012057 Crossed: CSX TRANS/PEAT ST CheckValue: 1,828,601,188

Note ID: 3A131051081000C

Span 002 -- Pier: Pedestals -- Rated 3, Was 4
Referenced Photos: "14", "15", "16", "17"
2013 - The right side of the Pier 2 pedestal at Girder G2 has severe spalling with exposed corroded reinforcement (Photo 14). All 4 sides of the Pier 2 pedestals at Girders G3 & G4 have horizontal and transverse cracking and the concrete sounds hollow (Photo 15). The begin and right sides of the Pier 2 pedestal at Girder G8 have severe deterioration with cracking, efflorescence, rust staining and spalling with exposed corroded reinforcement and this pedestal is in poor condition throughout (Photos 16 & 17). Remaining pedestals on Pier 2 are in better condition and would rate '4' or '5' alone.

Note ID: 3A131051081000D

Span 002 -- Pier: Cap Beam -- Rated 4, Was 4
Referenced Photos: "17", "18"
2013 - The begin face of the Pier 2 cap beam near Column 1 has an approximate 6 square foot area of cracking and spalling with exposed corroded reinforcement (Photo 18). Similar spalling with exposed corroded reinforcement has also occurred on the begin face of the Pier 2 cap beam beneath the Girder G8 pedestal (Photo 17). The Pier 2 cap beam is also hollow sounding on approximately 10% of the area of the begin and end faces.

Note ID: 3A131051081000F

Span 002 -- Pier: Pier Columns -- Rated 4, Was 4
Referenced Photos: "18"
2013 - The right face of Column 2 of Pier 2 has hollow sounding concrete on approximately 30% of its surface. However, this condition is not sufficiently detrimental to warrant a rating lower than '5' for this item. Remaining areas of Pier 2 columns would rate '5' or '6' alone.

Note ID: 3A1310510810007

Span 003 -- Deck Elements: Sidewalks, Fascias -- Rated 5, Was 5
Referenced Photos: "11"
2013 - The right fascia at the begin of Span 3 has an isolated area of spalling with exposed corroded reinforcement. Remaining areas of sidewalks and fascias in Span 3 are generally solid and in better condition.

Note ID: 3A1310510810001

End Abut -- Abutment: Joint with Deck -- Rated 4, Was 4
Referenced Photos: "1"
2013 - The concrete header is spalled full width of the end abutment joint with deck resulting in poor rideability. The end abutment joint is otherwise intact full width.

Inspection Date: 6/20/2013 RC: 33 BIN: 1051081

Inspection Notes

Carried: 690I 690I33012057 Crossed: CSX TRANS/PEAT ST CheckValue: 1,828,601,188

Note ID: 3A1310510810003

End Abut -- Abutment: Seats and Pedestals -- Rated 4, Was 5
Referenced Photos: "4"
2013 - The right fascia pedestal on the end abutment supporting Girder G8 is cracked with efflorescence and rust staining. Remaining areas of bridge seat and pedestals on the end abutment would rate '6' alone.

Inspection Date: 6/20/2013 RC: 33 BIN: 1051081

Inspection Photos in Photo Number Order

Carried: 690I 690I33012057 Crossed: CSX TRANS/PEAT ST CheckValue: 1,828,601,188

End Joint



Photo Number: 1 Photo Filename: 13DSCN7884.jpg

Begin Bearing at Girder G8



Photo Number: 2 Photo Filename: 13DSCN7892.jpg

Inspection Date: 6/20/2013 RC: 33 BIN: 1051081

Inspection Photos in Photo Number Order

Carried: 690I 690I33012057 Crossed: CSX TRANS/PEAT ST CheckValue: 1,828,601,188

End Bearing at Girder G8



Photo Number: 3 Photo Filename: 13DSCN7880.jpg

End Pedestal at Girder G8



Photo Number: 4 Photo Filename: 13DSCN7883.jpg

Inspection Date: 6/20/2013 RC: 33 BIN: 1051081

Inspection Photos in Photo Number Order

Carried: 690I 690I33012057 Crossed: CSX TRANS/PEAT ST CheckValue: 1,828,601,188

Begin Left Cheek Wall and Bridge Rail



Photo Number: 5 Photo Filename: 13DSCN7894.jpg

Span 1 Left Fascia



Photo Number: 6 Photo Filename: 13DSCN7893.jpg

Inspection Date: 6/20/2013 RC: 33 BIN: 1051081

Inspection Photos in Photo Number Order

Carried: 690I 690I33012057 Crossed: CSX TRANS/PEAT ST CheckValue: 1,828,601,188

Span 1 Right Fascia



Photo Number: 7 Photo Filename: 13DSCN7891.jpg

Span 1 Right Fascia Girder - Typical All 3 Spans



Photo Number: 8 Photo Filename: 13DSCN5353.jpg

Inspection Date: 6/20/2013 RC: 33 BIN: 1051081

Inspection Photos in Photo Number Order

Carried: 690I 690I33012057 Crossed: CSX TRANS/PEAT ST CheckValue: 1,828,601,188

Pier 1 Pedestal at Girder G8 Right Face



Photo Number: 9 Photo Filename: 13DSCN5354.jpg

Pier 1 Column 3 Right Face



Photo Number: 10 Photo Filename: 13DSCN5355.jpg

Inspection Date: 6/20/2013 RC: 33 BIN: 1051081

Inspection Photos in Photo Number Order

Carried: 690I 690I33012057 Crossed: CSX TRANS/PEAT ST CheckValue: 1,828,601,188

Spans 2 & 3 RIght Fascia



Photo Number: 11 Photo Filename: 13DSCN5348.jpg

Span 2 Right Fascia



Photo Number: 12 Photo Filename: 13DSCN5352.jpg

Inspection Date: 6/20/2013 RC: 33 BIN: 1051081

Inspection Photos in Photo Number Order

Carried: 690I 690I33012057 Crossed: CSX TRANS/PEAT ST CheckValue: 1,828,601,188

Pier 2 Bearing Girder G2 - Typical



Photo Number: 13 Photo Filename: 13DSCN5342.jpg

Pier 2 Pedestal at Girder G2 Right Face



Photo Number: 14 Photo Filename: 13DSCN5343.jpg

Inspection Date: 6/20/2013 RC: 33 BIN: 1051081

Inspection Photos in Photo Number Order

Carried: 690I 690I33012057 Crossed: CSX TRANS/PEAT ST CheckValue: 1,828,601,188

Pier 2 Pedestal at Girder G3 - Typical of Pedestal at Girder G4



Photo Number: 15 Photo Filename: 13DSCN5344.jpg

Pier 2 Pedestal at Girder G8



Photo Number: 16 Photo Filename: 13DSCN5346.jpg

Inspection Date: 6/20/2013 RC: 33 BIN: 1051081

Inspection Photos in Photo Number Order

Carried: 690I 690I33012057 Crossed: CSX TRANS/PEAT ST CheckValue: 1,828,601,188

Pier 2 Pedestal at Girder G8 and Cap Beam



Photo Number: 17 Photo Filename: 13DSCN5347.jpg

Begin Face Pier 2 Cap Beam and Column



Photo Number: 18 Photo Filename: 13DSCN5340.jpg

Inspection Date: 6/20/2013 RC: 33 BIN: 1051081

Inspection Photos in Photo Number Order

Carried: 690I 690I33012057 Crossed: CSX TRANS/PEAT ST CheckValue: 1,828,601,188

Span 3 Left Bridge Rail - Lower Rail



Photo Number: 19 Photo Filename: 13DSCN5339.jpg

Span 3 Right Bridge Rail - Lower Rail



Photo Number: 20 Photo Filename: 13DSCN5349.jpg

Inspection Date: 6/20/2013 RC: 33 BIN: 1051081

Inspection Sketches in Sketch SysID Order

Carried: 690I 690I33012057 Crossed: CSX TRANS/PEAT ST CheckValue: 1,828,601,188

Sketch ID: 3A1310510810000 Sketch Filename: photo_plan.13

General Sketch for Bridge
Referenced Photos:

Photo Location Plan

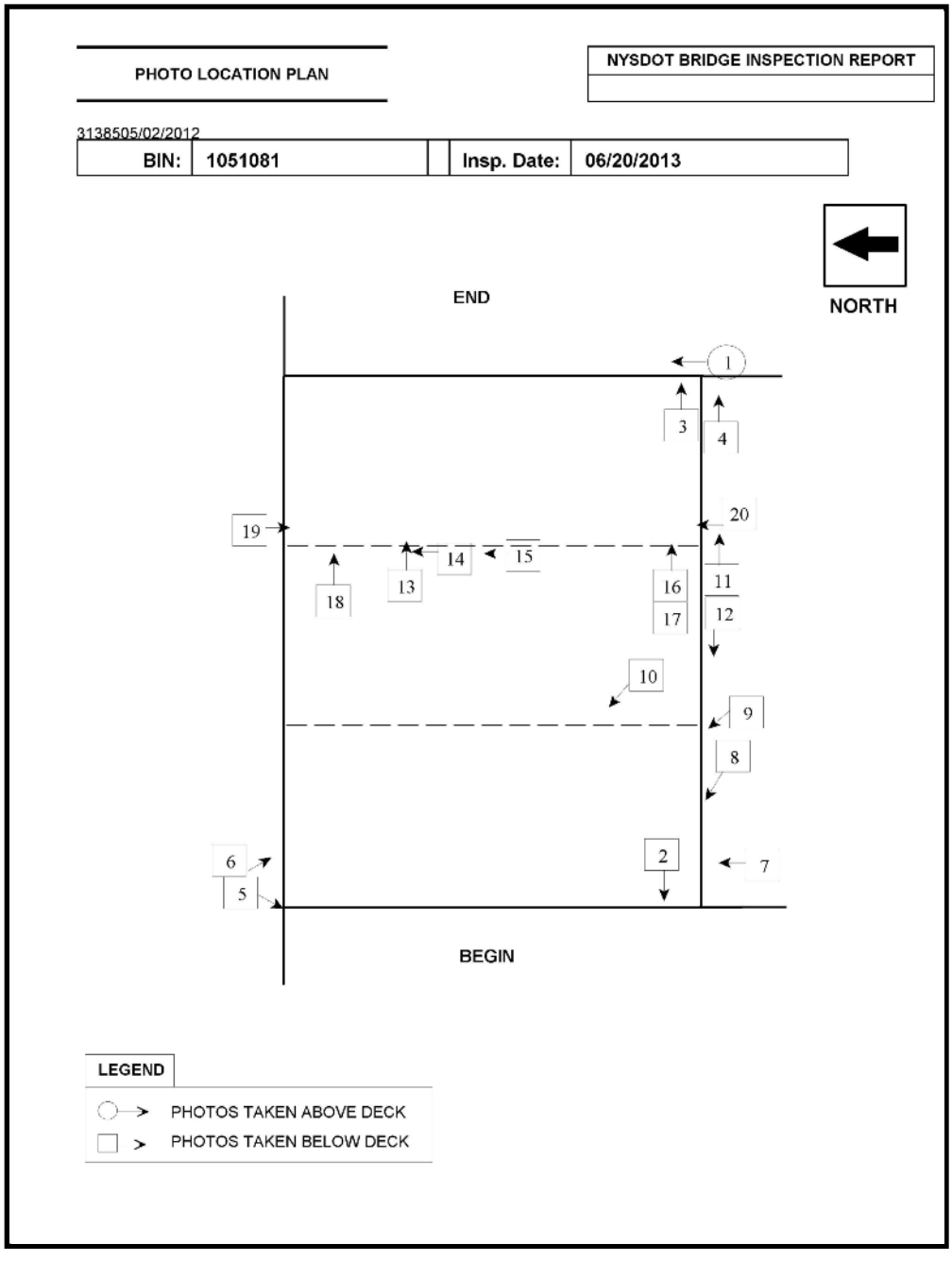

Inspection Date: 6/20/2013 RC: 33 BIN: 1051081

Inspection Sketches in Sketch SysID Order

Carried: 690I 690I33012057 Crossed: CSX TRANS/PEAT ST CheckValue: 1,828,601,188

Sketch ID: 3A1310510810001 Sketch Filename: LdRat.13

General Sketch for Bridge
Referenced Photos:

Load Rating Field Check Form

NYSDOT BRIDGE INSPECTION REPORT			
SHEET	1	OF	1

LOAD RATING FIELD CHECK FORM

BIN:	1051081		Insp. Date:	06/20/2013

Dead Load - Note Changes since Last load Rating or state "NONE":

None

Section Loss - Note locations and amount of loss on each girder or state "NONE":

No significant change since the last inspection.

Additional Notes:

None

Attachments:

None

Team Leader: James W. Gorzynski, NYS PE #53772

Inspection Date: 6/20/2013 RC: 33 BIN: 1051081

Inspection Sketches in Sketch SysID Order

Carried: 690I 690I33012057 Crossed: CSX TRANS/PEAT ST CheckValue: 1,828,601,188

Sketch ID: 3A1310510810002 Sketch Filename: RR_Clearance.13

General Sketch for Bridge
Referenced Photos:

Railroad Vertical Clearances

PLAN VIEW - RAILROAD VERTICAL CLEARANCES (Feet)

NYSDOT BRIDGE INSPECTION REPORT			
SHEET	1	OF	1

Insp. Date:	06/20/2013	BIN:	1051081

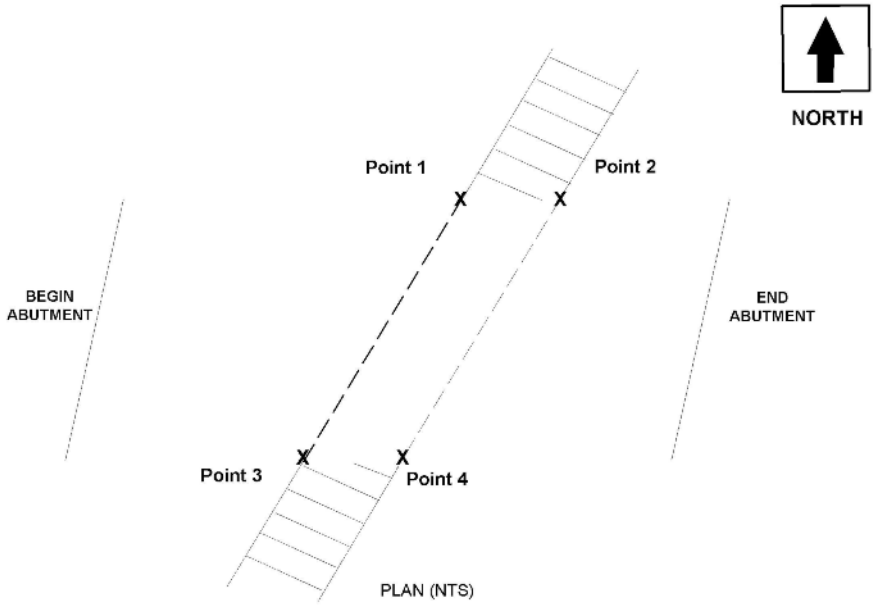

YEAR> / Pt #	2013							
1	25'+							
2	25'+							
3	24'-6 3/4"							
4	24'-8"							

NOTES: 2013 - Form created and entered into BIPPI.

Inspection Date: 6/20/2013 RC: 33 BIN: 1051081

Gen. Rec., Postings, Federal Ratings, etc.

Carried: 690I 690I33012057 Crossed: CSX TRANS/PEAT ST CheckValue: 1,828,601,188

Overall Condition:

GENERAL RECOMMENDATION: 5

Computed Condition Rating: 4.500

Problems Requiring Action:

NO Further Investigation Needed

NO Flags Issued

POSTINGS:

Inspector Confirmed existing Posting data as correct.
Posted Vertical Clearance ON the bridge is: No Posting
Posted Vertical Clearance UNDER the bridge is: No Posting
No Load Restriction is posted on this bridge

Overloads Observed:

NO Overload Vehicles were observed on this bridge

FEDERAL RATINGS:

NBI Deck Condition: 6
NBI Superstruct Condition: 7
NBI Substruct Condition: 6
NBI Channel Condition: N
NBI Culvert Condition: N

Diving Inspection Needs:

Diving Inspection Required? No Date of Last Diving Inspection: No Date

Inventory Problems:

Inventory Problems Exist? No

Miscellaneous:

Time Required to Inspect Bridge: 3 Hours

Lane Closure Needs: None Required

Railroad Flagging is Required for 1.5 Hours

No Pedestrian Fence

No Snow Fence

The BIN Plate is in OK condition

Inspection Date: 6/20/2013 RC: 33 BIN: 1051081

Gen. Rec., Postings, Federal Ratings, etc.

Carried: 690I 690I33012057 Crossed: CSX TRANS/PEAT ST CheckValue: 1,828,601,188

Special Emphasis Inspection Required:

Non-Redundant/Fracture Critical Members - No
Pin and Hangers - No
Fatigue-Prone Welds - Yes
Non-Categorized Fatigue-Prone Details - No
Other (Specified in Text) - No

Special Emphasis Details:

2013 - Staggered diaphragms are exempt from 100% hands-on inspection because the webs are greater than 3/8" thick.

A 100% hands-on inspection was performed on welds at the ends of all cover plates.

General Notes To the Next Inspector:

2013 - The BIN Plate is mounted on the begin left wingwall.

Name of Feature Crossed is CSX Peat Street Lead.

CSX Railroad Milepost QC 1.02.

Staggered diaphragms are exempt from 100% hands-on inspection because the webs are greater than 3/8" thick.

Improvements Observed:

2013 - None

Inspection Date: 6/20/2013 RC: 33 BIN: 1051081

Review Progress and Personnel Present at Inspection

Carried: 690I 690I33012057 Crossed: CSX TRANS/PEAT ST CheckValue: 1,828,601,188

Inspection Submission Status:

Submitted to QC Engineer on: 8/19/2013
QC Submission Number: A0331401

QC Review Completed: 8/20/2013
QC Engineer: Stephen L. Gauthier

Submitted to Liaison Engineer on: 8/20/2013
Liaison Submission Number: 03325

Liaison Review Completed: 8/26/2013
Liaison Engineer: TODD M. HERMANN

Submitted for BIIS Processing on: 8/26/2013
BIIS Submission Number: .kp1

Current Status: Keypunched, Sent to BIIS
Check Value: 1,828,601,188

Personnel Present During Inspection:

James W. Gorzynski - Team Leader
Debra A. Tomsa - Assistant Team Leader
Laurie A. Orr -

Inspection Date: 6/20/2013 RC: 33 BIN: 1051081

Inspection Access Requirements

Carried: 690I 690I33012057 Crossed: CSX TRANS/PEAT ST CheckValue: 1,828,601,188

Equipment Required for Inspection

Access Requirement Changes WERE Noted During This Inspection.
This Listing is from the Inspection.

ACCESS CATEGORIES FOR ENTIRE BRIDGE
Required: Walking, Medium Lift, Railroad Flagman

ACCESS CATEGORIES FOR SPAN 1
Required: Walking, Medium Lift, Railroad Flagman

ACCESS CATEGORIES FOR SPAN 2
Required: Walking, Medium Lift, Railroad Flagman

ACCESS CATEGORIES FOR SPAN 3
Required: Walking, Medium Lift, Railroad Flagman

Inspection Date: 6/20/2013 RC: 33 BIN: 1051081

Culvert Measurements

Carried: 690I 690I33012057 Crossed: CSX TRANS/PEAT ST CheckValue: 1,828,601,188

Culvert Measurements

CULVERT DIMENSIONS FOR SPAN 3
LOCATION: L1
Line AF: 0.00 feet
Line FE: 0.00 feet
Line CF: 0.00 feet
Line AD: 0.00 feet
Line BE: 0.00 feet

COMMENTS:
No Comments Provided.

Standard Photos **RC: 33 BIN: 1051081**

Carried: 690I 690I33012057 Crossed: CSX TRANS/PEAT ST

1051081_LOCATION_MAP.JPG

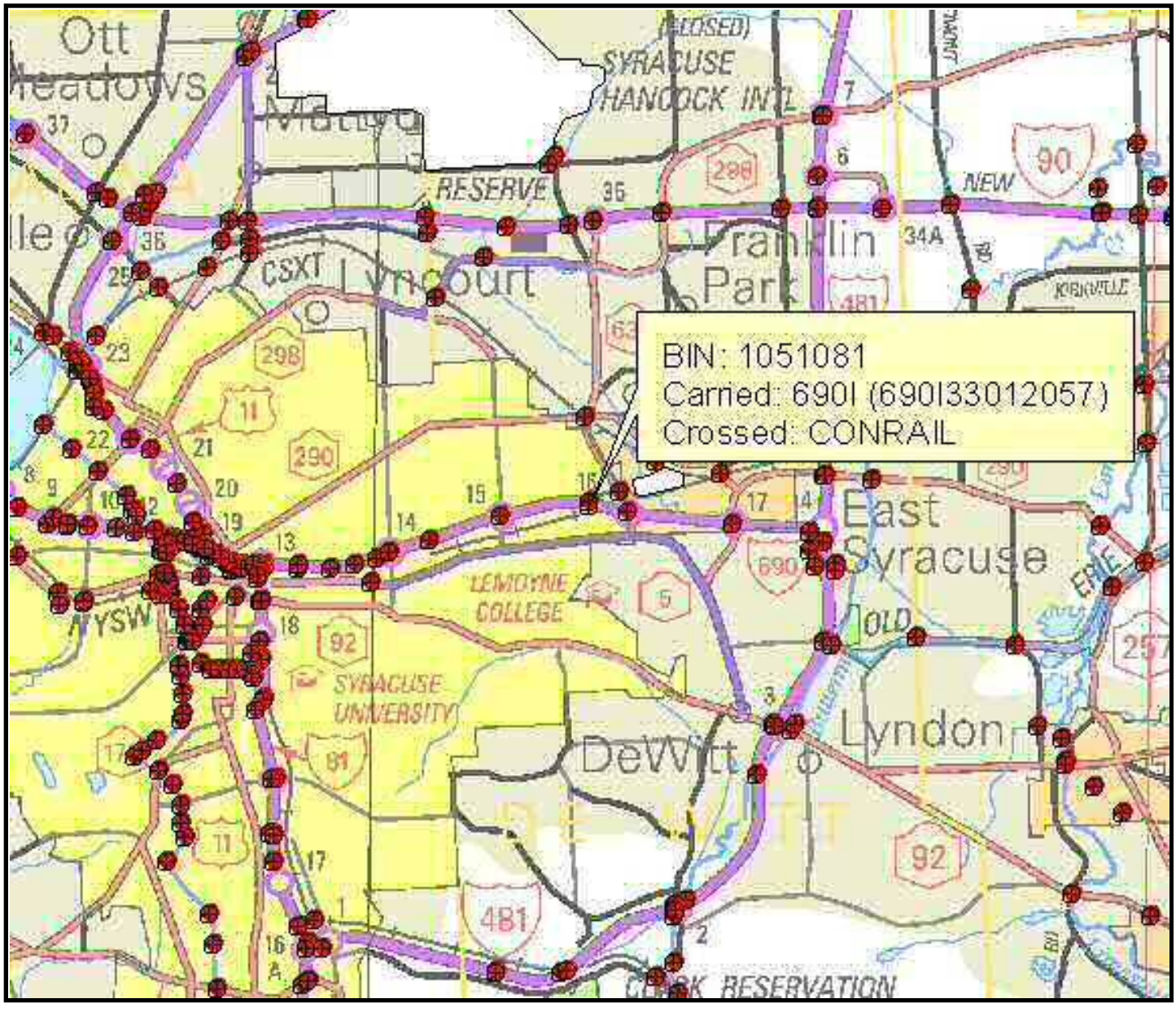

Standard Photos **RC: 33 BIN: 1051081**

Carried: 690I 690I33012057 Crossed: CSX TRANS/PEAT ST

1051081_QUAD_MAP.JPG

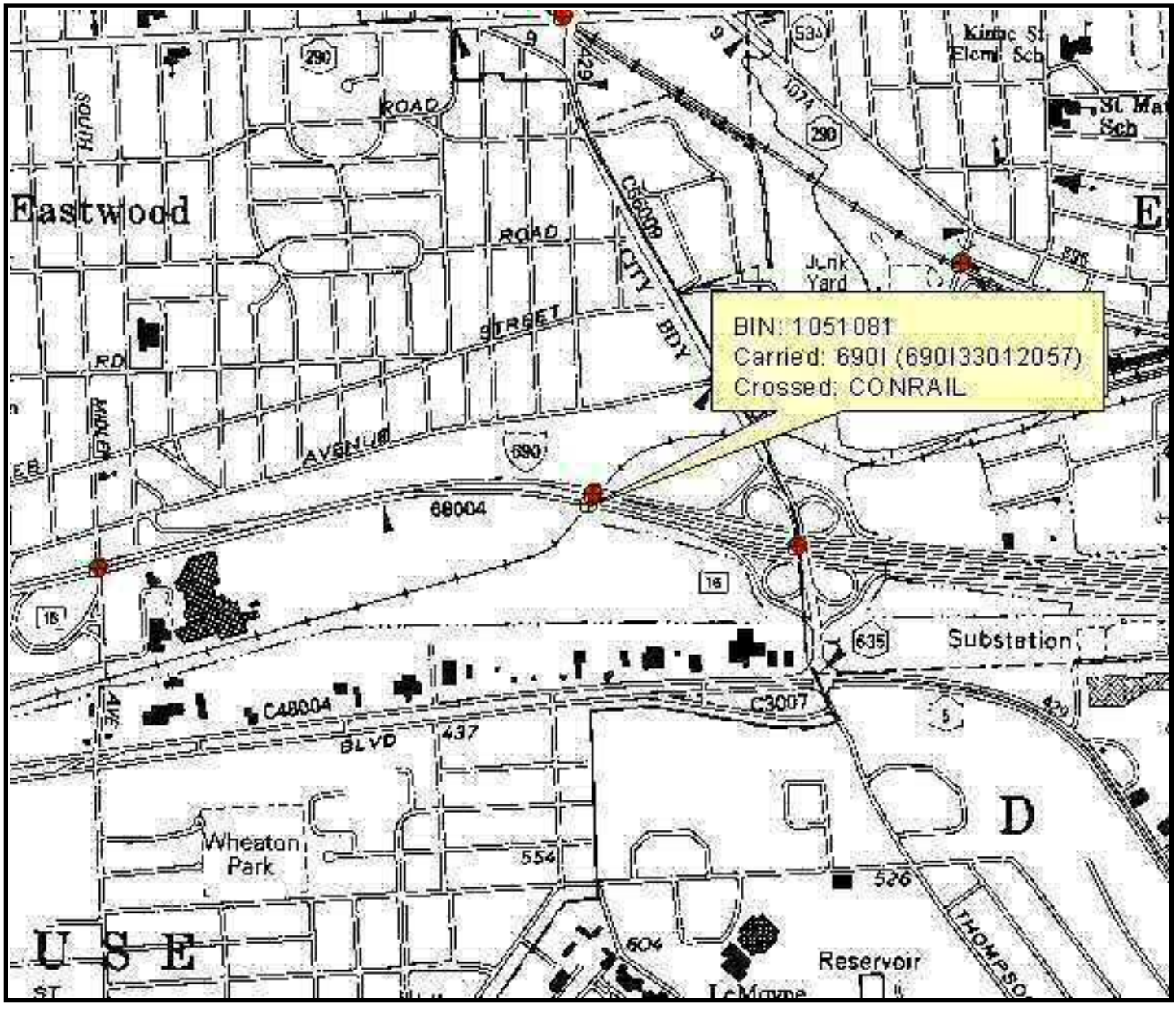

Standard Photos **RC: 33 BIN: 1051081**

Carried: 690I 690I33012057 Crossed: CSX TRANS/PEAT ST

AbutmentEnd.11.jpg



Standard Photos **RC: 33 BIN: 1051081**

Carried: 690I 690I33012057 Crossed: CSX TRANS/PEAT ST

ApproachBegin.11.jpg



Standard Photos **RC: 33 BIN: 1051081**

Carried: 690I 690I33012057 Crossed: CSX TRANS/PEAT ST

ApproachEnd.11.jpg



Standard Photos **RC: 33 BIN: 1051081**

Carried: 690I 690I33012057 Crossed: CSX TRANS/PEAT ST

ElevationSpan1&2&3.11.jpg



Standard Photos **RC: 33 BIN: 1051081**

Carried: 690I 690I33012057 Crossed: CSX TRANS/PEAT ST

F2CrossedSpan1&2&3Left.11.jpg

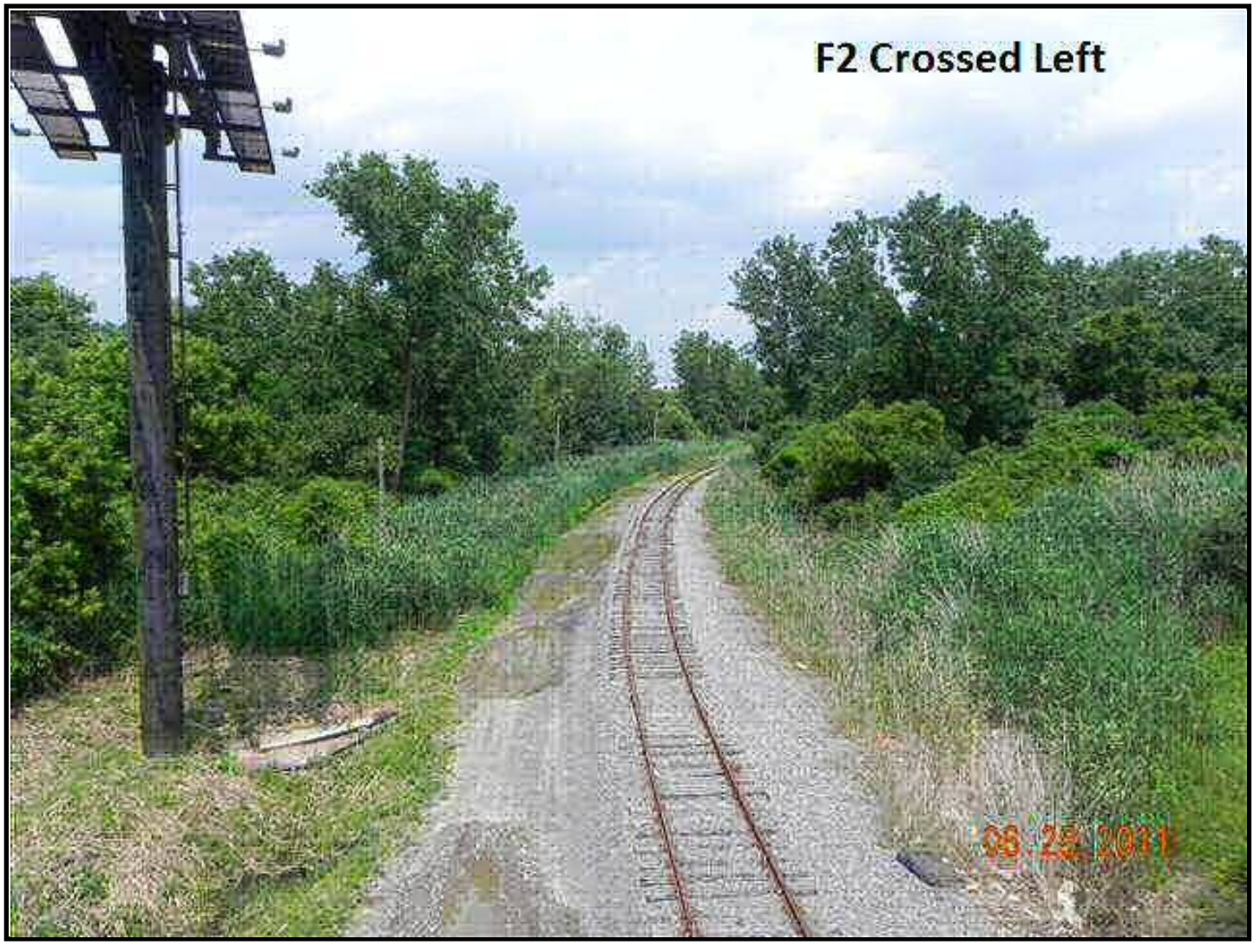

Standard Photos RC: 33 BIN: 1051081

Carried: 690I 690I33012057 Crossed: CSX TRANS/PEAT ST

F2CrossedSpan1&2&3Right.11.jpg

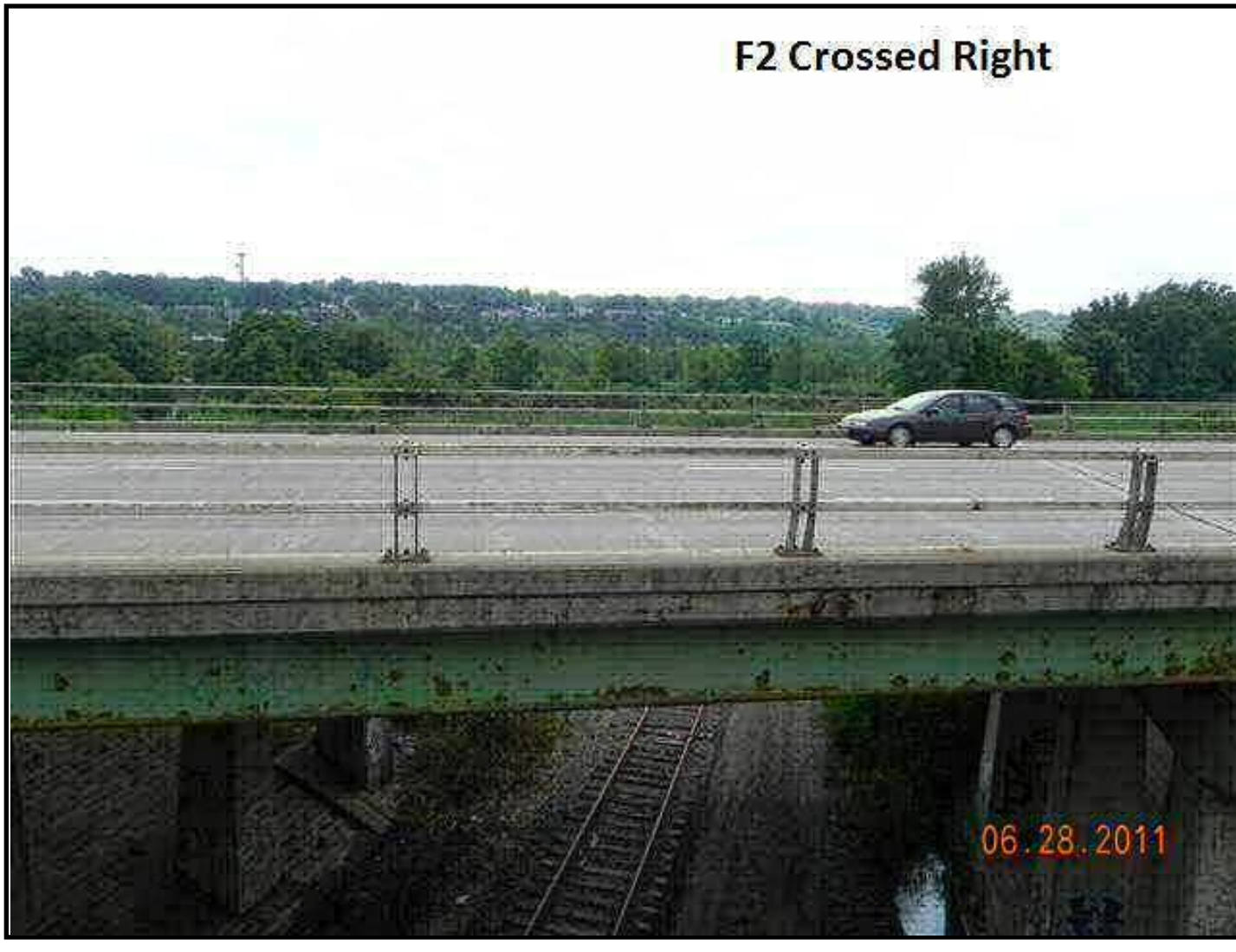

FramingSpan2.11.jpg



Standard Photos **RC: 33 BIN: 1051081**

Carried: 690I 690I33012057 Crossed: CSX TRANS/PEAT ST

Pier1.11.jpg



LEVEL 1 LOAD RATING SUMMARY SHEET

Region/County Region 3/Onondaga BIN 1051081
Feature(s) Carried and Crossed I-690 Westbound/CSX Trans/Peat St.
Date of field inspection upon which Level 1 rating is based 3/28/2014

OVERALL BRIDGE RATINGS (BASED ON LOWEST RATED ELEMENTS):

Total number of rating units 1

	H inventory	H operating	HS inventory	HS operating
Rating	H 38.78 (tons)	H 64.77 (tons)	HS 48.97 (tons)	HS 81.77 (tons)
Lowest rated element	Interior Girder B30 (Span 3)	Interior Girder B30 (Span 3)	Interior Girder B30 (Span 3)	Interior Girder B30 (Span 3)

Analysis method LFR Comments

Individual Rating Unit Level 1 values:

Rating unit span(s) 1

Main member ratings

	H inventory	H operating	HS inventory	HS operating
Rating	H (tons)	H (tons)	HS (tons)	HS (tons)
Lowest rated element				

Analysis method Comments

Floorbeam ratings

	H inventory	H operating	HS inventory	HS operating
Rating	H (tons)	H (tons)	HS (tons)	HS (tons)
Lowest rated element				

Analysis method Comments

Stringer ratings

	H inventory	H operating	HS inventory	HS operating
Rating	H 38.78 (tons)	H 64.77 (tons)	HS 48.97 (tons)	HS 81.77 (tons)
Lowest rated element	Interior Girder B30 (Span 3)	Interior Girder B30 (Span 3)	Interior Girder B30 (Span 3)	Interior Girder B30 (Span 3)

Analysis method LFR Comments

Certified by Date

Quality Control Engineer Signature Date
Agency or Company represented by certifier

Note:
-If connection ratings govern, record them under stringer ratings for stringer – floorbeam connection, floorbeam ratings for floorbeam-main member connections, etc.
-When Level 1 results indicated the need for load posting or other corrective action, the NYSDOT Regional Structures Engineer shall be notified immediately.
-Load ratings should be filed in the regional office within 60 days of completion of calculations.
-Bridges shall be flagged based on Level I results in accordance with the current NYSDOT flagging procedure.
-Bridge load posting, closure, etc. determinations shall be made as results are being produced.

PARSONS

100 Broadway
New York, NY 10005
Phone: 212-266-8300
Fax: 212-571-6825
www.parsons.com

TECHNICAL MEMORANDUM

FROM: Kian Siang Chau, P.E
NYSPE 082744

DATE: JUNE 10, 2014

RE: SEISMIC SCREENING SUMMARY
NEW YORK STATE DEPARTMENT OF TRANSPORTATION
D031085; PIN 3501.60; I-81

BIN: 1051081 (I-690 Westbound / CSX Trans/Peat St)

This memorandum summarizes the seismic screening conducted for BIN 1051081 as part of the Interstate 81 Project in Syracuse, NY. The purpose of the screening is to determine if seismic retrofits are warranted at the superstructure to substructure connection, and if further seismic evaluation of the structure is required. This memorandum will give the screening results, retrofits required and recommendations for further seismic evaluation of the structure.

SCREENING PROCEDURE

The seismic screening was performed in accordance with the FHWA Seismic Retrofitting Manual for Highway Structures: Part 1 - Bridges, January 2006. As per the referenced manual, seismic screenings were performed for both lower level and upper level earthquake ground motion. The lower level earthquake ground motion has a reasonable likelihood of occurrence within the life of the bridge (50% probability of exceedance within a 75 year bridge life). The upper level earthquake ground motion has a finite likelihood of occurrence within the life of the bridge (7% probability of exceedance within a 75 year bridge life).

Values for the spectral acceleration for the Syracuse area used in the screening are as follows:

- Lower Level Earthquake Ground Motion for a Short Period (0.2 seconds): $S_S = 0.0251$
- Lower Level Earthquake Ground Motion for a Long Period (1.0 seconds): $S_1 = 0.0076$
- Upper Level Earthquake Ground Motion for a Short Period (0.2 seconds): $S_S = 0.139$
- Upper Level Earthquake Ground Motion for a Long Period (1.0 seconds): $S_1 = 0.047$

These values are considered constant and are the same for all seismic screenings of bridges in the Syracuse area.

The Site Class is based on the soil conditions at the bridge location. It was determined that this parameter has little effect on the results of the seismic screening because the spectral acceleration values for the Syracuse area are small. Based on this, a site class of D was used for all seismic screenings of bridges in the Syracuse area.

Bridge parameters used in the seismic screening were retrieved from the record drawings and WinBolts data.

The seismic screening takes into account the anticipated service life, importance, and the seismic exposure of the bridge to determine a seismic retrofit category (SRC). The SRC is then used to determine seismic evaluation methods and retrofit measures. There are four SRCs, A through D. Seismic retrofit category A is the lowest category; bridges in this category do not require retrofits or further seismic evaluation. Seismic retrofit category D is the highest category; bridges in this category requiring the most rigorous seismic evaluations and retrofits.

SCREENING RESULTS

The SRC for the bridge is "**C**" for lower level earthquake ground motion and "**B**" for upper level earthquake ground motion.

RETROFITS REQUIRED

No seismic retrofits are required for the bridge superstructure to substructure connection.

RECOMMENDATIONS FOR FURTHER SEISMIC EVALUATION

For the lower level earthquake ground motion, it is recommended that capacity/demand ratios for bridge components are calculated as per Section 5.4 of the referenced manual. For the upper level earthquake ground motion, it is recommended that the capacities of the bearings are checked as per Section 5.2 of the referenced manual.

Retrofit cost estimates will be provided after any further required seismic evaluations are completed.

PARSONS

100 Broadway
New York, NY 10005
Phone: 212-266-8300
Fax: 212-571-6825
www.parsons.com

TECHNICAL MEMORANDUM

FROM: Kian Siang Chau, P.E
NYSPE 082744

DATE: JULY 1, 2014

RE: FATIGUE EVALUATION
NEW YORK STATE DEPARTMENT OF TRANSPORTATION
D031085; PIN 3501.60; I-81

BIN: 1051081 (I-690 Westbound / CSX Trans/Peat St.)

This memorandum documents a fatigue evaluation conducted for the existing Interstate 81 Viaduct Project. Existing structures with AASHTO Category D, E, and E' fatigue-prone details require 100% hands-on inspection unless proven to be exempt. The purpose of the evaluation is to assess the remaining life of fatigue-prone components.

EVALUATION PROCEDURES

The fatigue evaluation was performed in accordance with the AASHTO Guide Specification for Fatigue Evaluations of Existing Steel Bridges, 1990. Fatigue-prone welds identified in the biennial inspection reports were located on record drawings and confirmed visually in the field. Additional information concerning fatigue-prone welds located in BIN folders was also obtained and reviewed prior to inspection.

EVALUATION RESULTS

The results of the fatigue evaluation of the existing bridge are shown below. The remaining safe fatigue life of the fatigue components have been **exhausted**.

Fatigue Detail Location	Remaining Safe Fatigue Life (Years)	Remaining Mean Fatigue Life (Years)
Interior Girders, End of Bottom Flange Cover Plate	-7.53	66.69
Exterior Girders, End of Bottom Flange Cover Plate	-7.59	66.39

BRIDGE DECK EVALUATION REPORT

RECOMMENDATIONS

The bridge deck inspection findings and evaluation are used as a tool for developing the scope of work and cost estimates for the development and comparison of alternatives for the overall project.

The total damaged area of the deck is 5.8% of the total deck surface area. The cores indicate the reinforcement steel is 4.25 inches to 4.5 inches below the surface of the deck. The lab test indicates that chloride ion concentrations at all the sample locations are significantly higher than the corrosion threshold for steel.

Due to the age, condition and high chloride ion content of the bridge deck concrete, the bridge deck should be rehabilitated or replaced to meet the current standards and to mitigate excessive future maintenance costs.

ALTERNATIVES

- Rehabilitation Alternative - 2 inch Bonded Concrete Overlay
  - The removal of the top 2 inches of the existing deck will remove a portion of the deck with high chloride ion concentrations. It can be anticipated that chloride ions will continue to migrate into the remaining deck to the reinforcing steel resulting in further corrosion-related deterioration of the deck surface. This alternative will result in an estimated extended useful life expectancy of 20 years.

  The design life of the project is 30 years (ETC + 30). This alternative does not meet the project objectives of obtaining 30 years of service life and is not evaluated further.

- Rehabilitation Alternative – 100% Deep Removal and Partial Deck Reconstruction
  - Scope

    The scope of this alternative will include the complete removal of the bridge railings, curb and safety walks, and fascias to the level of the original top of the deck. The joint will be removed. The scope of this alternative will include partial depth reconstruction with removal of the concrete to at least 1 inch below the top mat of the reinforcement steel. Additionally, any further areas of deteriorated concrete detected will require full depth removal. Any corrosion of the reinforcement steel will be removed by sandblasting or hydro-blasting. The proposed deck partial reconstruction will be a nominal 5.75 inches

thick concrete deck yielding a 9.5 inches standard thickness deck. A new single-sloped concrete barrier and a new armorless joint will be installed. The Level 1 Load Rating for the final condition was found to be acceptable.

- Useful Life Expectancy

  This alternative will provide an estimated extended useful life expectancy of 35 years.

- Cost Estimate

  The estimated cost for this alternative is $870,000. The Engineer's Opinion of Probable Construction Cost worksheet is at the end of this section.

- Replacement Alternative – Cast-In-Place Concrete
  - Scope

    This scope of this alternative will include the complete demolition of the existing bridge deck, bridge railings, curb and safety walks, fascias and bridge joint. The bridge deck will be replaced with a new 9.5 inches standard thickness concrete deck. A new single-sloped concrete barrier and a new armorless joint will be installed. The Level 1 Load Rating for the final condition was found to be acceptable.

  - Useful Life Expectancy

    This alternative will provide an estimated extended useful life expectancy of 40+ years.

  - Cost Estimate

    The estimated cost for this alternative is $1,083,000. The Engineer's Opinion of Probable Construction Cost worksheet is at the end of this section.

- Replacement Alternative – Pre-cast Concrete Deck Panels
  - Scope

    The scope of this alternative is similar to the Cast-In-Place Concrete Deck Replacement Alternative except the deck structure will be precast panels. This alternative offers reduced construction time over conventional construction.

  - Useful Life Expectancy

    This alternative will provide an estimated extended useful life expectancy of 40+ years.

  - Cost Estimate

    The comparison of accelerated construction to conventional construction is beyond the current scope of this evaluation.

IN-DEPTH INSPECTION REPORT

D031085 P.I.N. 3501.60

ELEMENT SPECIFIC BRIDGE WORK

B.I.N. 1051082

TEAM LEADER Andrew P. Thompson 84914
NYSPE LICENSE #

ASSISTANT TEAM LEADER Mike Savino

FEATURE CARRIED I-690 Eastbound

FEATURE CROSSED CSX TRANS/PEAT ST

DATE FIELD WORK BEGAN 3/24/13

DATE FIELD WORK COMPLETED 3/28/14

TABLE OF CONTENTS

- STRUCTURE IDENTIFICATION
- INTRODUCTION
- PROJECT LOCATION MAP
- IN-DEPTH CONDITION DOCUMENTATION
- PLANS & SKETCHES
- IN-DEPTH PHOTO DOCUMENTATION
- ASBESTOS SAMPLING SURVEY
- LATEST BIENNIAL INSPECTION REPORT

STRUCTURE IDENTIFICATION

a. Bridge Identification Number (BIN):	1051082
b. Reference Marker:	690I 3301 2057
c. Region:	NYSDOT Region 3
d. County:	Onondaga
e. Town:	City of Syracuse
f. Feature Carried:	I-690 Eastbound
g. Feature Crossed:	CSX Trans/Peat St.

INTRODUCTION

a. Bridge History	
i. Year Built:	1971
ii. Bridge Type:	Three Span, Steel Multi-girder
iii. Span Lengths:	
Span 1 Length:	53 feet
Span 2 Length:	53 feet
Span 3 Length:	53 feet
iv. Out-to-Out Width:	54.3 feet
v. Structural Ratings and Rankings	
1. Federal Sufficiency:	89.9 (June 2013)
2. Condition Rating:	4.68 (June 2013)
3. General Recommendation:	5
vi. Live Load Posting (HS25):	No
vii. National Highway System (NHS):	Yes
viii. Previous work Done:	Replace wearing surface (1981). Replace joint system (1998). Repair seats & pedestals (2006). Repair structural bridge deck (2008).
ix. Planned Future Work:	N/A
b. Highway Classification	
i. Functional Classification:	Urban Principle Arterial - Interstate
ii. Traffic Volumes	

YEAR	AADT Projected
2014	49059
2034	72898
2054	108323

PROJECT LOCATION MAP

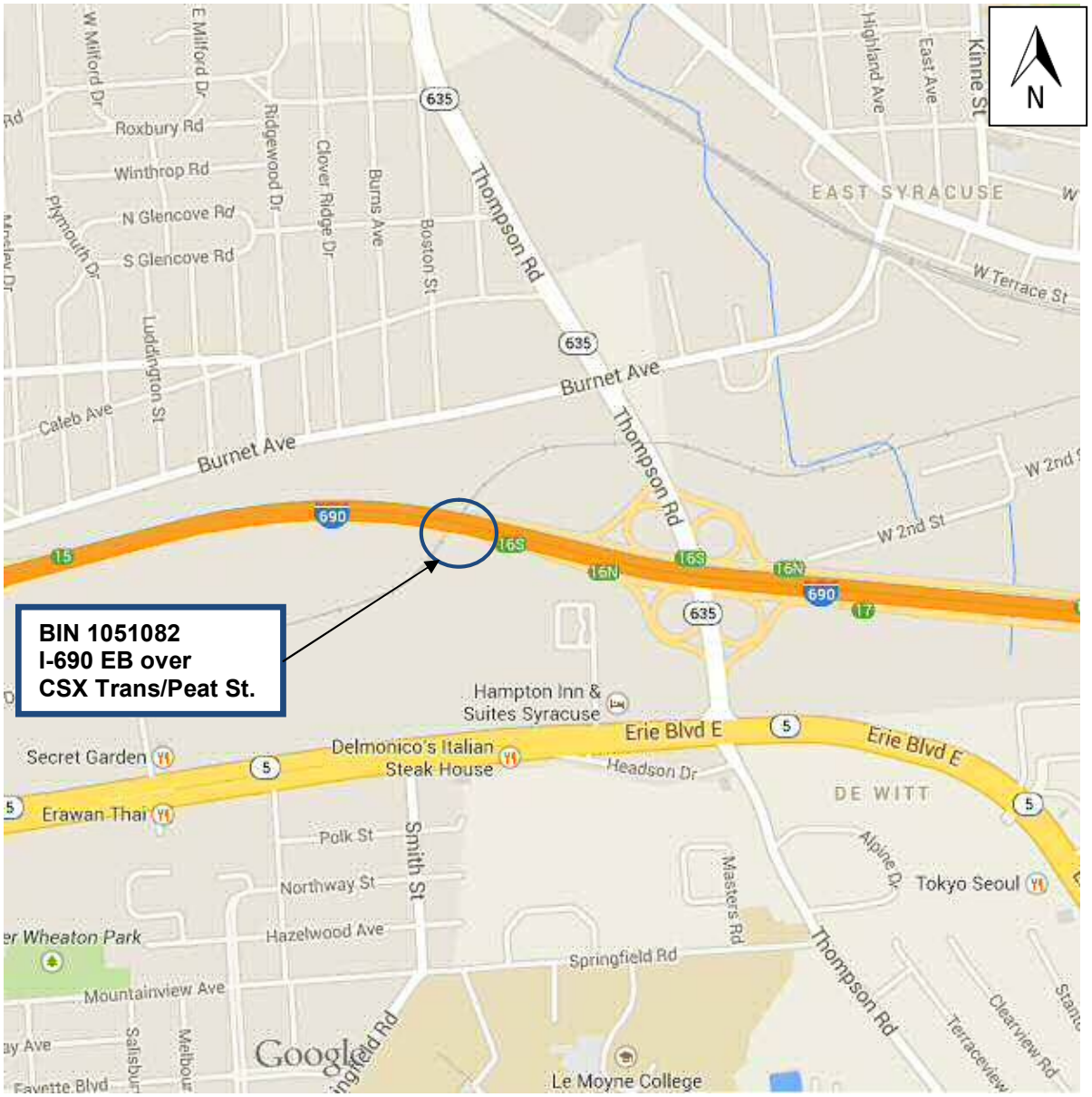

IN-DEPTH CONDITION DOCUMENTATION

NYS DEPT. OF TRANSPORTATION BRIDGE

BIN 1051082

SHEET: 1 OF 5

DATE: 3/27/2014

FEATURE CARRIED: I-690 EB
FEATURE CROSSED: CSX TRANS/PEAT ST.

TEAM LEADER: A.THOMPSON

A. TEAM LEADER: M. SAVINO

ITEM	REMARKS	PHOTO N0.
	The travelway has 4 lanes numbered from left to right for the purpose of this report.	
TP 349-22	Begin Abutment – Joints: The seal is in good condition. The begin header has minor spalling on its begin corner for the full width with asphalt patching. There is s 5' length on the left lane that has up to 4" wide spalling with the begin approach pavement settled +/-3/4" (Photo 1). Transverse cracking was noted for a 4' length near the centerline of the travelway (Photo 2). No signs of significant leakage were observed underneath.	1,2
TP 349-24	Begin Abutment – Bearings: The begin bearings are expansion sliding on bronze plates. Fascia Bearings 1 and 6 have rust and delamination. Pack rust has bowed the bronze plates inhibiting movement (Photo 3). The remainder of the bearings are in good condition.	3
TP 349-25	End Abutment – Bearings: The end bearings are expansion sliding on bronze plates. Bearings 1, 5, and 6 have rust and delamination. Pack rust has bowed the bronze plates inhibiting movement (Photo 4). The remainder of the bearings are in good condition.	4
TP 349-27	End Abutment – Seats and Pedestals: The bridge has stub abutments with no seats. Pedestal 6 has a 1' wide x 6" high x 4" deep spall at the begin right (Photo 4). The remaining pedestals are in good condition.	4
TP 350-21	Spans 1 through 3 - Deck Elements – Sidewalks and Fascias Sidewalks: The bridge has safety walks. The left safety walk has ¾" deep max. spalling along the granite curb ranging from 1" to 6" wide (Photo 5). The spalling is worst in Span 1. There is 6" max. width spalling starting 10' from the end in Span 3 (Photo 6). The right safety walk has 2 lengths of ¾" deep max. spalling along the granite curb. There is a 4' length of 2" max. width spalling 30' from the end and a 10' length of 3" max. width spalling 40' from the end (Photo 7). Spalling on the outside edges is rated under Fascias. The remainder of both safety walks have isolated light map cracking.	5-7

ITEM	REMARKS	PHOTO N0.
TP 350-21	Spans 1 through 3 - Deck Elements – Sidewalks and Fascias (Continued) Fascias: The fascias in all three spans are in poor condition with numerous spalls, hollow areas, and cracks. Significant areas are noted below: Span 1 Left: 14' from begin – 2.5 sf x 2" deep spall at bottom with hollowness surrounding it (Photo 8); 17' from begin – 1.5 sf x 2" deep spall at top with exposed rebar and hollowness surrounding it (Photo 8); 21' from begin – 1.5 sf hollow area at top (Photo 9); 24' from begin – 2.5 sf hollow area at top with 10" x 4" x 2" deep adjacent spall (Photo 9). Span 3 Left: 15' from begin – 0.6 sf x 1.5" deep spall at top (Photo 10); 17' from begin – 1.5 sf x 1" deep spall with exposed rebar at bottom (Photo 10); 20' from begin – 0.6 sf x ½" deep spall at bottom with 1 sf of hollowness to begin (Photo 10); 15' from end – 2' long x 2" high x 2" deep spall (Photo 11). Span 1 Right: 12' from begin – 0.9 sf x 2" deep spall at top with exposed rebar hollowness surrounding it (Photo 12); 23' from begin – 0.5 sf 1" deep spall at top (Photo 13); 26' from begin – 2.5' long x 4" high x 2" deep spall with exposed rebar and hollowness surrounding it (Photo 14); 4' from end – 1 sf x 1" deep spall near bottom with 1.5 sf of hollowness to its begin (Photo 15). Span 2 Right: 10' from end – 6 sf x 2.5" deep spall with exposed rebar and 3 sf of hollowness to its end (Photo 16). Span 3 Right: 9' from begin – 1.5 sf x 1" deep spall with exposed rebar (Photo 17); 14' from begin – 6' long x 7" high x 1.5" deep spall with exposed rebar (Photo 18); 20' from begin – 5.5' long x 10" high hollow area with 1 sf x 1" deep spall (Photo 19); 27' from begin – 5' long x 6" high x 3" deep top corner spall with exposed rebar (Photo 20); 18' from end – 1.5 sf x 1" deep spall at bottom with exposed rebar (Photo 21); 9' from end – 3 sf hollow area (Photo 22).	8-22
TP 350-27	Spans 1 through 3 - Superstructure – Structural Deck: The structural deck is a 9.75" thick concrete mono deck with SIP forms. The original deck was 7.5" thick, and there is no record in the inventory or BIN folder of a wearing surface addition. There are several hollow, cracked, and patched areas as shown in the Deck Deterioration Plan (Photos 1 and 23). No spalling was found. The most severe location is a 6.2 sf hollow area with cracking at the end of Span 1 in the right lane (Photo 24). The concrete was broken into <0.5 sf sections but did not come loose with a hammer. Overall, 0.6% of the deck is damaged. The deck has SIP forms, and the underside is exposed only at the overhangs and at the haunches adjacent to the abutment backwalls. The forms are in good condition throughout all spans. The deck overhangs are very narrow and are rated under Fascias. There is a spall in the deck haunch at the begin right measuring 2' long x 5" high x 4" deep (Photo 25). No rebar is exposed. The remainder of the haunches at both abutments are in good condition.	1,23-25

ITEM	REMARKS	PHOTO N0.
TP 350-30	Spans 1 through 3 - Superstructure – Paint: The tops of the fascia outside bottom flanges have up to 100% paint failure in all spans (Photo 8). The fascia outside web faces typically have 10% to 20% paint failure mostly at the bottom. The left fascia girders are more severe in each span and also have 20% to 50% paint failure on their bottom flange bottom faces (Photo 26). The interior girders are better with isolated pinpoint rusting and edges of bottom flanges having flaking (Photo 27). Ends of girders at the bottom and end diaphragms have up to 50% paint failure in locations of leaky joints (Photo 28).	8,26-28
TP 350-31	Span 1 Superstructure – Joints: The seal is rising slightly and tearing at several locations throughout its length (Photo 24 and 29). The headers are in good condition. Underneath leakage is evident. Bay 5 has severe rusting with delamination on the steel plates (Photo 30). Bay 4 has only surface rust. The remaining bays appear in good condition from underneath.	24,29 30
TP 350-31	Span 2 Superstructure – Joints: The seal and headers appear to be in good condition. Underneath leakage is evident. Bay 2 has severe rusting with delamination on the steel plates (Photo 31). The remaining bays have only surface rust.	31
TP 350-33	Pier 1 – Bearings: Both rows of bearings on Pier 1 are fixed. Bearing 6 has delamination and pack rust under the rockers (Photo 28). Bearings 1 and 5 have rust with only minor delamination (Photo 32). The remaining bearings are in good condition.	28,32
TP 350-34	Pier 1 – Pedestals: Pedestal 4 has a 0.8 sf x 1.25” deep spall on its end face at the left with exposed rebar (Photo 33). Pedestal 6 has a 1.7 sf x 1.5” deep spall on its begin face at the left with exposed rebar (Photo 34). There is cracking on its end and right faces. Neither of the spalls undermine the bearing. The remaining pedestals are in good condition. See Pier 1 Deterioration Sketch.	33,34
TP 350-37	Pier 1 – Cap Beam: There are hollow and cracked areas and one spall detailed in the Pier 1 Deterioration Sketch. The spall is located on the begin right under Pedestal 6 and measures 0.9 sf x 1” deep with exposed rebar (Photo 34).	34
TP 350-38	Pier 1 Columns: The columns have cracking and hollow areas as detailed on the Pier 1 Deterioration Sketch. Column 4 is the most severe with +/-25% (55 sf) of its area sounding hollow (Photo 27). The right face is nearly 100% hollow with vertical cracking throughout.	27

FEATURE CARRIED: I-690 EB
FEATURE CROSSED: CSX TRANS/PEAT ST.

TEAM LEADER: A.THOMPSON
A. TEAM LEADER: M. SAVINO

ITEM	REMARKS	PHOTO N0.
TP 350-33	Pier 2 – Bearings: The begin row of bearings on Pier 2 is expansion sliding on bronze plates, and the end row is fixed. The plates and rockers on Bearings 1, 2, and 6 have areas of rust, delamination, and pack rust under the rockers (Photo 35). The expansion bearings at these locations have bowed bronze plates due to pack rust which restricts movement.	35
TP 350-34	Pier 2 – Pedestals: The pedestals have areas of spalled and cracked concrete as detailed on the Pier 2 Deterioration Sketch. The most severe location is a 1.6 sf x 5” deep spall with exposed rebar on the top right corner of Pedestal 2 (Photo 36).	36
TP 350-37	Pier 2 – Cap Beam: The cap beams have areas of cracked and hollow concrete as detailed on the Pier 2 Deterioration Sketch. The most severe location is at the begin top corner to the left of Pedestal 3 where there is cracking and a hollow area measuring 3.1 sf on the begin face and 4.4 sf on the end face (Photo 36).	36
TP 350-38	Pier 2 Columns: The columns have areas of cracked, hollow, and spalled concrete as detailed in the Pier 2 Deterioration Sketch. The Column 1 left face has a 22 sf x 1.25” deep spall with exposed rebar, and the remainder is hollow (Photo 37). The Column 2 right face has 12.3 sf of 1” deep spalling with exposed rebar, and the remainder is hollow (Photo 38). No debonded rebar was noted.	37,38

NYS DEPT. OF TRANSPORTATION BRIDGE

BIN 1051082

SHEET: 5 OF 5

DATE: 3/27/2014

FEATURE CARRIED: I-690 EB
FEATURE CROSSED: CSX TRANS/PEAT ST.

TEAM LEADER: A.THOMPSON

A. TEAM LEADER: M. SAVINO

ITEM	REMARKS	PHOTO N0.
	Special Emphasis Inspection Required Non-Redundant/Fracture Critical Members - No Pin and Hangers - No Fatigue-Prone Welds - Yes Non-Categorized Fatigue-Prone Details - No Other - No Category E welds – Spans 1 through 3 - Welds at ends of cover plates (Photo 26).	26

PLANS & SKETCHES

BIN 1051081
BIN 1051082

F.I.S.H. 68-4 F.I.S.H. 68-5 F.I.S.H. [illegible]

FED. RD. REG. NO.	STATE	FEDERAL AID PROJECT NO.	SHEET NO.	TOTAL SHEETS
	NEW YORK	[illegible]	193 R1	290

INTERSTATE ROUTE CONNECTION 570
ERICKSON STREET TO SYRACUSE CITY LINE

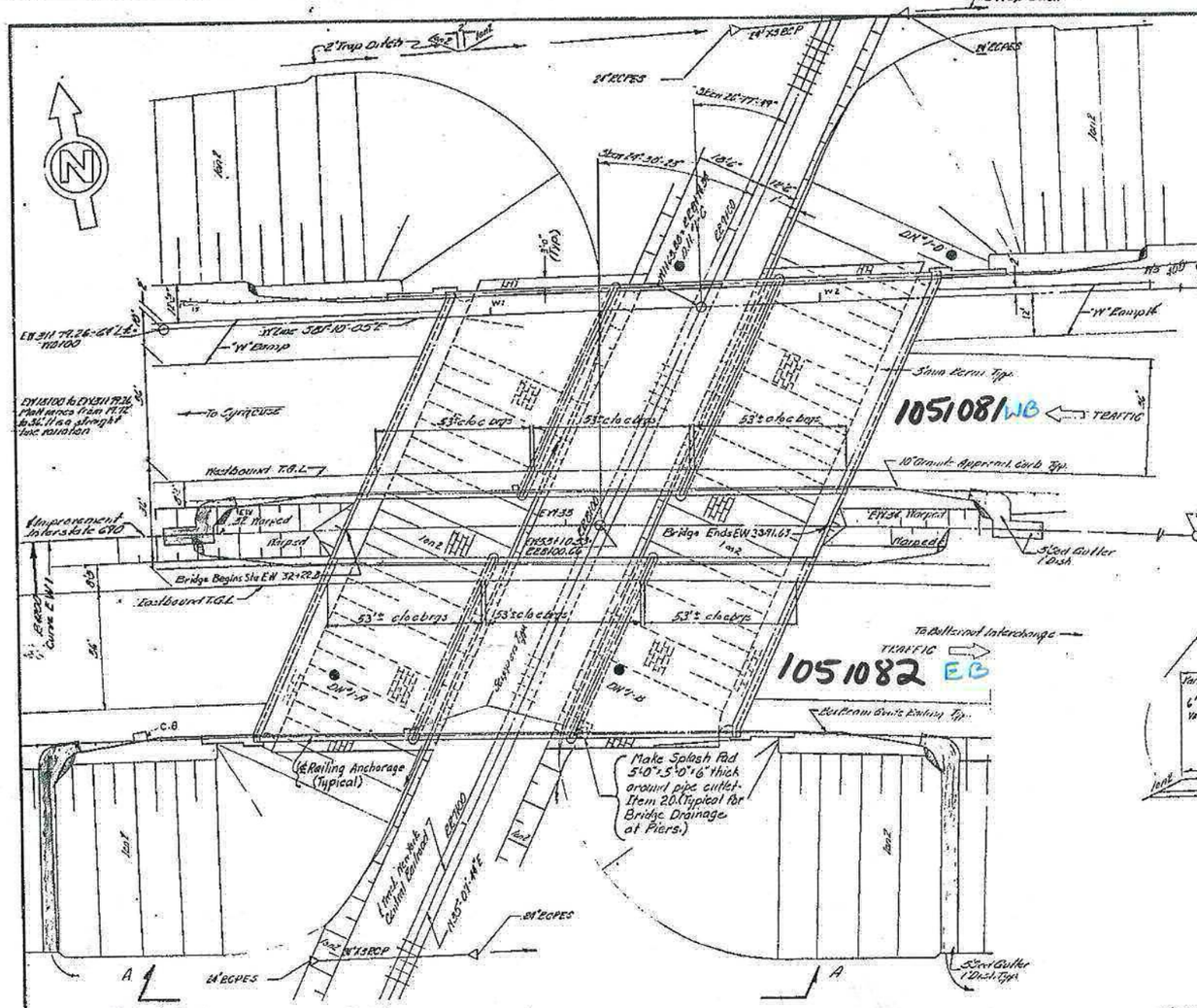

PLAN
Scale 1"=20'

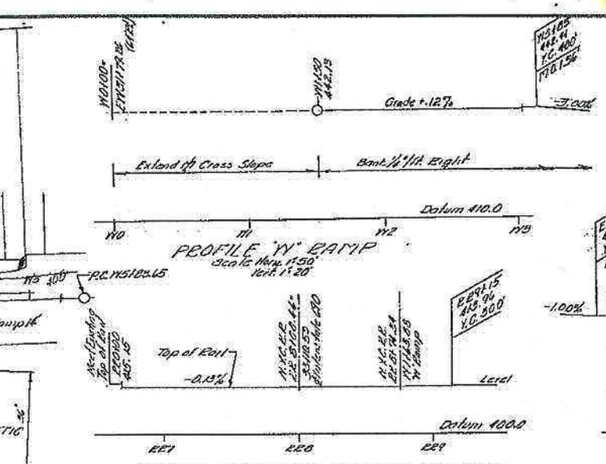

PROFILE "W" RAMP
Scale Horiz. 1"=50' Vert. 1"=20'

PROFILE NEW YORK CENTRAL RAILROAD
Scale Horiz. 1"=50' Vert. 1"=20'

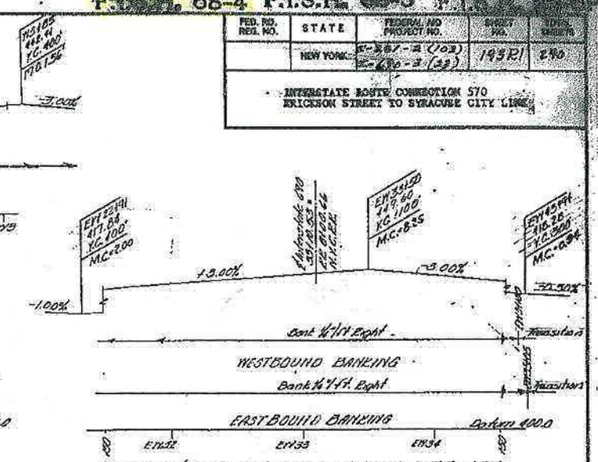

PROFILE ℄ IMPROVEMENT INTERSTATE 690
Scale Horiz. 1"=50' Vert. 1"=20'

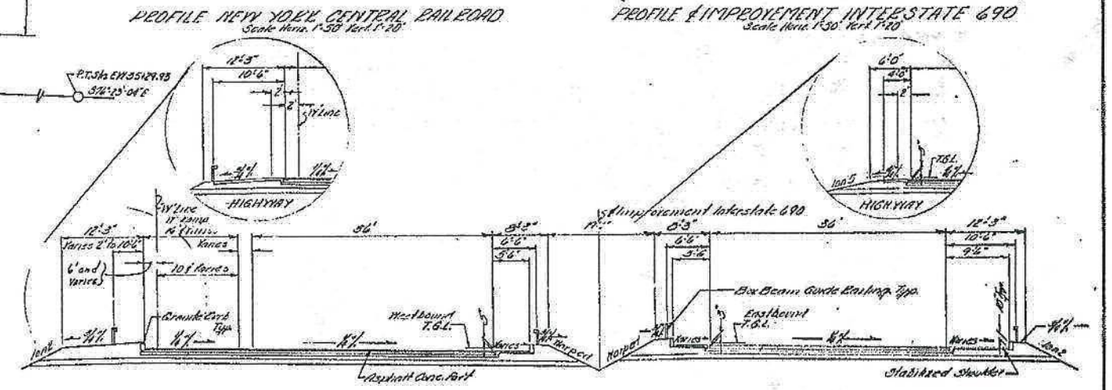

TYPICAL APPROACH SECTION
Scale 1"=10'

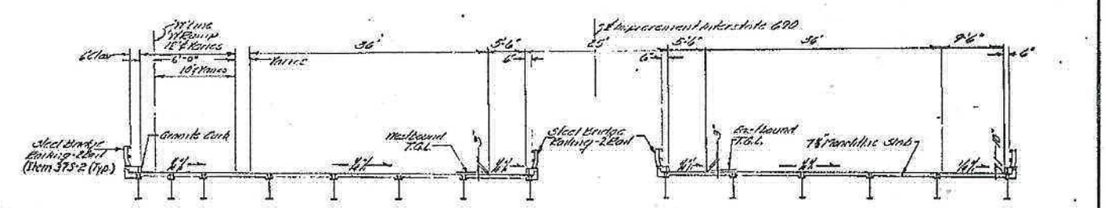

TYPICAL BRIDGE SECTION
Scale 1"=10'

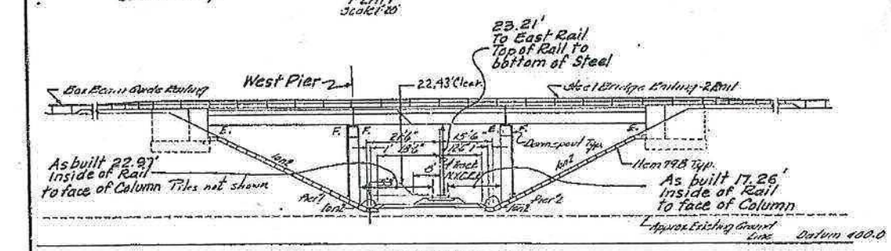

ELEVATION A-A
Scale 1"=20'

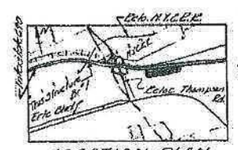

LOCATION PLAN
Scale 1"=2000'

Note
For Notes and Estimate of Quantities see Drawing No. 1 of 5 Common Details.

Curve EW1			
PC	Sta. EW 18+00.00	PI	210.27 Rt.
	114.04 Rt.		℄ A4+46.81
	℄ 244+29.17		N 1,115,218.25
	N 1,115,066.13		E 631,178.87
	E 630,314.76	R	4200.00'
C	N 1,110,929.73	Δ	23°-35'-58"
	E 631,042.92	L	1729.93
		T	877.40'
PT	Sta. EW 35+29.93	Bk	N 80°-00'-58"E
	227.66 Lt.	Ahd	S 76°-23'-04"E
	℄ CR 10+55.32		
	N 1,115,011.70		
	E 632,031.62		

AS BUILT REVISIONS
Actual Clearance Measurements

BR. NO. 1
I-690 OVER NEW YORK CENTRAL R.R.
ERICKSON ST. TO SYRACUSE CITY LINE
EW33+10.53 = R.R. 8+00.66

PLAN & PROFILE

DRAWING NO. 1 OF 25

PROJECT ENGINEER A. KAROLAK
IN CHARGE OF L.H. TURNER
DESIGNED BY
DESIGN CHECKED BY
DETAILED BY H.F. Ratta
DETAIL CHECKED BY D.C. Reinhardt

F.I.S.H. 68-4 F.I.S.H. 68-5 F.I.S.H. 68-6P

FED. RD. REG. NO.	STATE	FEDERAL AID PROJECT NO.	SHEET NO.	TOTAL SHEETS
	NEW YORK	F-281-2 (103) I-690-3 (23)	197R1	290

INTERSTATE ROUTE CONNECTION 570
ERICKSON STREET TO SYRACUSE CITY LINE

WEST ABUTMENT	
BEAM	AZIMUTH
1	98° 49' 55.0"
2	99° 54' 24.5"
3	"
4	"
5	"
6	"
7	"
8	"
9	99° 24' 40.9"
10	"
11	"
12	"
13	"
14	"

WORKING POINTS		
PT.	STATION	OFFSET(-LEFT)(+RIGHT)
1	31 + 79.66	+ 63.500
2	31 + 92.86	+ 63.500
3	31 + 96.05	+ 66.430
4	31 + 79.24	+ 60.999
5	31 + 96.06	+ 66.994
6	32 + 44.30	- 70.513
7	32 + 56.92	- 70.730
8	32 + 60.83	- 74.306
9	32 + 44.09	- 68.008
10	32 + 60.07	- 73.458
11	32 + 16.77	+ 12.500
12	32 + 28.81	- 12.500

BIN 1051082

BIN 1051081

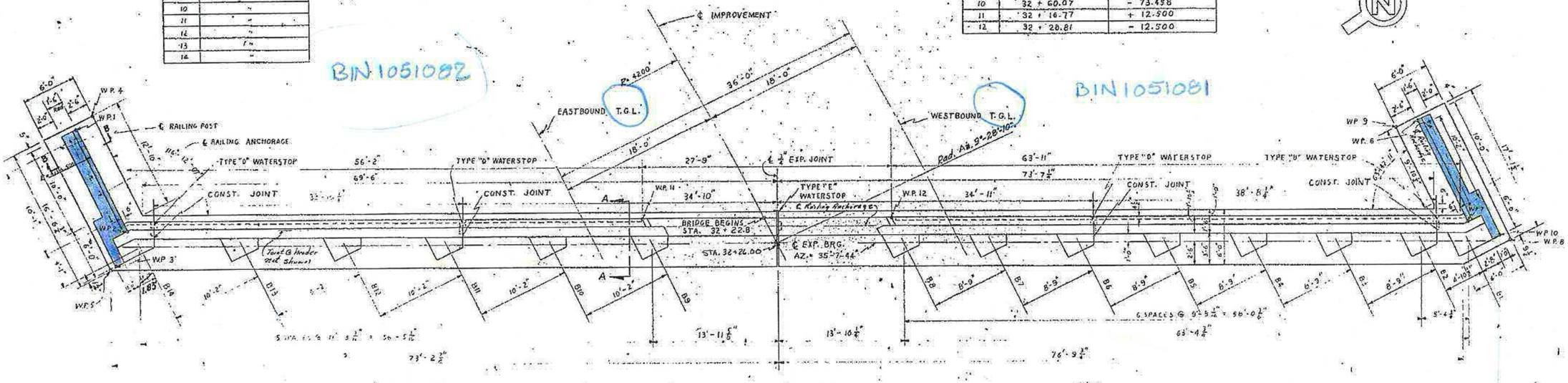

WEST ABUTMENT PLAN
SCALE 1/16" = 1'-0"

Notes:
1. FOR SECTIONS A-A, B-B, & H-H SEE DWG. #7
2. FOR WINGWALL DETAILS SEE DWG. # 6

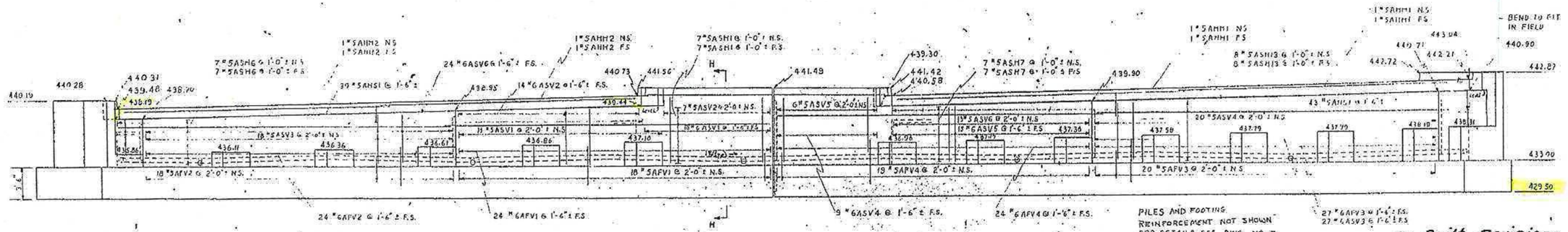

WEST ABUTMENT ELEVATION
SCALE 1/16" = 1'-0"

PILES AND FOOTING REINFORCEMENT NOT SHOWN FOR DETAILS SEE DWG. NO. 7

REINFORCEMENT BARS		
SIZE	LAP	EMBEDMENT
5	1'-1"	1'-7"
6	1'-3"	1'-11"

NOTE:-
BAR REINFORCEMENT COVER IN FOOTING TO BE 3 INCHES.
ALL OTHER COVER TO BE 2 INCHES EXCEPT AS NOTED IN SIDEWALKS.

As Built Revisions
Plan- Dimension

DR. NO. 1
I-690 OVER NEW YORK CENTRAL R.R.
ERICKSON ST. TO SYRACUSE CITY LINE
BW.33+10.53 = R.R. 8+00.66

WEST ABUTMENT (1 OF 3)

BEGIN

DRAWING NO. 5 OF 23

PROJECT ENGINEER A. KARCLAK
IN CHARGE OF L. H. TURNER
DESIGNED BY L. H. TURNER
DESIGN CHECKED BY W. J. LEMLER
DETAILED BY W. J. LEMLER
DETAIL CHECKED BY [illegible]

16.3333
15.8958333

F.I.S.H. 68-4 F.I.S.H. 68-5 F.I.S.H. 68-6P

FED. RD. REG. NO.	STATE	FEDERAL AID PROJECT NO.	SHEET NO.	TOTAL SHEETS
	NEW YORK	I-281-2 (103) I 690-3 (23)	200	290

INTERSTATE ROUTE CONNECTION 570
ERICKSON STREET TO SYRACUSE CITY LINE

WORKING POINTS		- INDICATES LEFT	+ INDICATES RIGHT		
PT	STATION	OFFSET (RAD. FT.)	PT	STATION	OFFSET (RAD. FT.)
1	34 + 35.492	- 77.958	8	33 + 59.980	+ 65.165
2	34 + 23.318	- 77.219	9	33 + 76.566	+ 60.999
3	34 + 19.650	- 79.675	10	33 + 58.837	+ 66.991
4	34 + 35.968	- 75.483	11	33 + 86.206	+ 12.500
5	34 + 20.039	- 80.531	12	33 + 97.025	- 12.500
6	33 + 76.232	+ 63.500	13	33 + 95.488	- 8.929
7	33 + 63.027	+ 63.500			

W.P. to W.P.	AZIMUTH	DISTANCE (FT.)
1-2	98° 49' 55.0"	12.298
6-7	101° 25' 45.0"	13.338

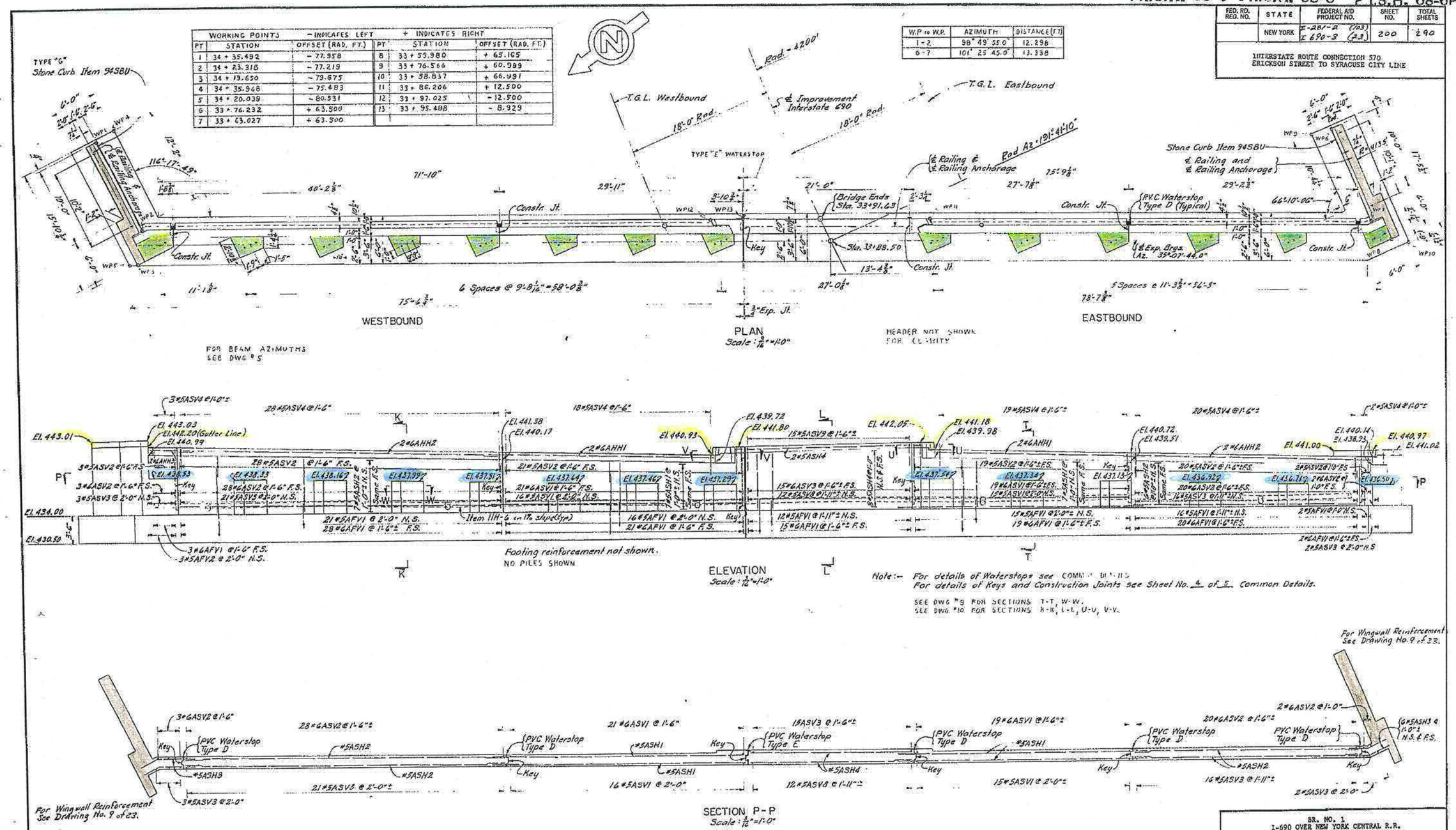

PROJECT ENGINEER A. KAROLAK
IN CHARGE OF L.H. TURNER
DESIGNED BY L.H. TURNER
DESIGN CHECKED BY N.J. LEWILER
DETAILED BY M. LACHUT
DETAIL CHECKED BY R.W. Perry, W. Lenler

BR. NO. 1
I-690 OVER NEW YORK CENTRAL R.R.
ERICKSON ST. TO SYRACUSE CITY LINE
EW 33+10.53 = R.R. 8+00.66

EAST ABUTMENT (1 OF 3)

DRAWING NO. 8 OF 23

FED. RD. REG. NO.	STATE	FEDERAL AID PROJECT NO.	SHEET NO.	TOTAL SHEETS
	NEW YORK	I-287-2 (703) I-690-3 (23)	203	240

INTERSTATE ROUTE CONNECTION 570
ERICKSON STREET TO SYRACUSE CITY LINE

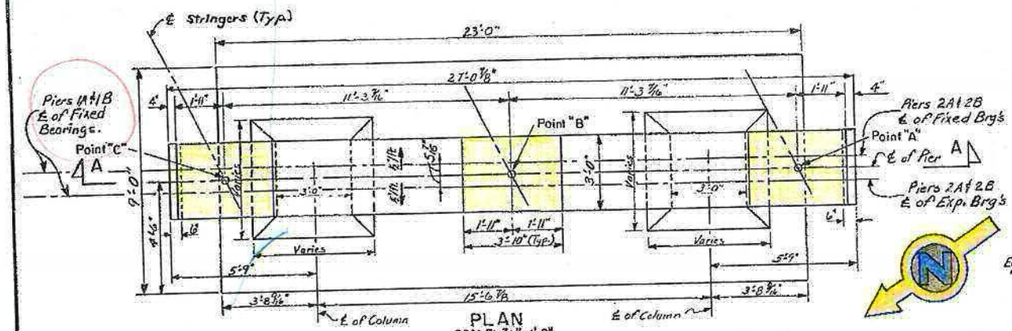

PLAN
SCALE: 3/8" = 1'-0"

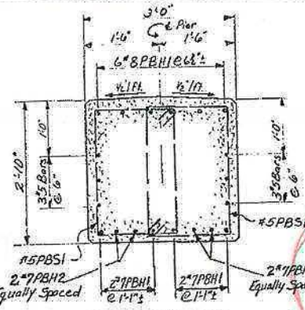

SECTION C-C
SCALE: 3/4" = 1'-0"

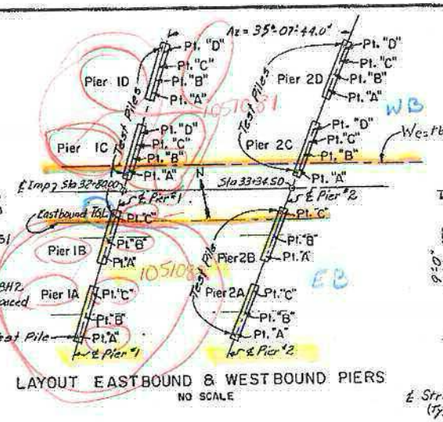

LAYOUT EASTBOUND & WESTBOUND PIERS
NO SCALE

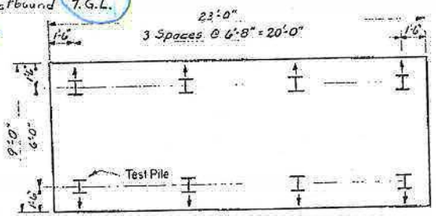

PILE PLAN
SCALE: 1/4" = 1'-0"

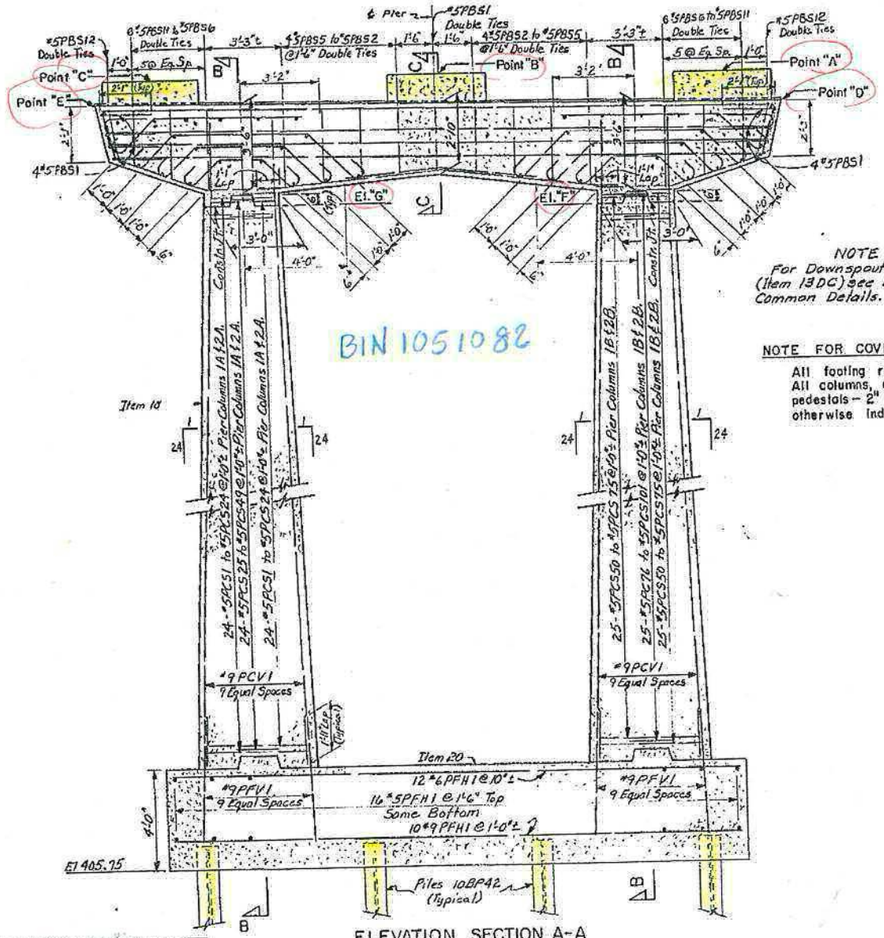

ELEVATION SECTION A-A
SCALE: 3/8" = 1'-0"

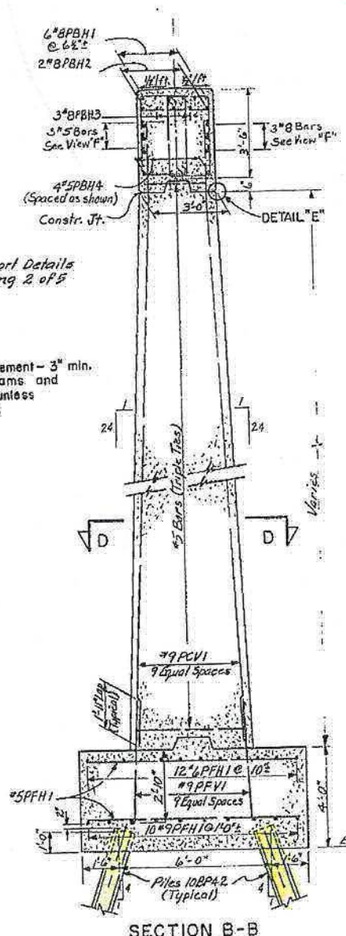

SECTION B-B
SCALE: 3/8" = 1'-0"

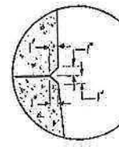

DETAIL "E"
NO SCALE

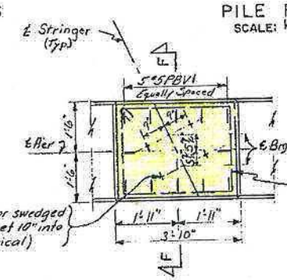

NOTE
All edges of pedestals, cap beams and columns to be chamfered 1".

TYPICAL PEDESTAL DETAILS
NO SCALE

NOTE
For Downspout Support Details (Item 13DC) see Drawing 2 of 5 Common Details.

NOTE FOR COVER
All footing reinforcement – 3" min.
All columns, cap beams and pedestals – 2" min. unless otherwise indicated.

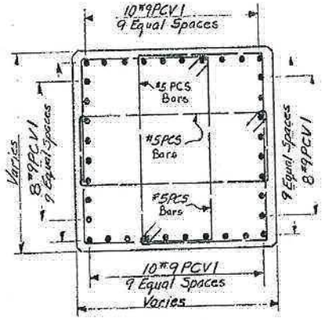

SECTION D-D
SCALE: 3/4" = 1'-0"

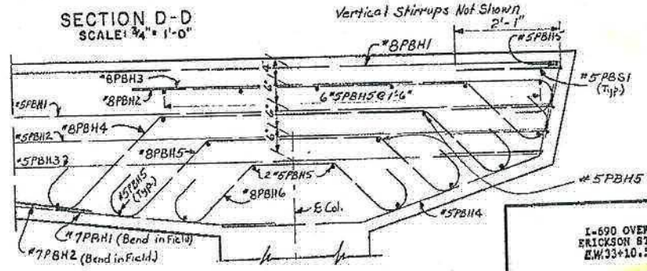

VIEW - "F"
HORIZONTAL CAP BEAM REINFORCEMENT
SCALE: 3/4" = 1'-0"

POINT		PIER 1A	PIER 1B	PIER 2A	PIER 2B
A	El.	436.36	437.07	436.45	437.12
	Sta.	3250.073	3264.671	3305.408	3319.599
	Offset	63.328 RT.	32.704 RT.	63.711 RT.	32.901 RT.
B	El.	436.60	437.31	436.97	437.34
	Sta.	3254.983	3269.489	3310.162	3324.283
	Offset	53.125 RT.	22.485 RT.	53.447 RT.	22.621 RT.
C	El.	436.84	437.54	436.90	437.56
	Sta.	3259.829	3274.284	3314.892	3328.944
	Offset	42.918 RT.	12.261 RT.	43.177 RT.	12.335 RT.
D	El.	435.36	436.07	435.45	436.12
E	El.	435.84	436.54	435.90	436.56
F	El.	431.46	432.17	431.35	432.22
G	El.	431.74	432.44	431.80	432.46

BIN 1051082

PROJECT ENGINEER A. KAROLAK
IN CHARGE OF L.N. TURNER
DESIGNED BY M.E. & R.P.
DESIGN CHECKED BY M.S.A.C. & R.P.
DETAILED BY
DETAIL CHECKED BY

BR. NO. 1
I-690 OVER NEW YORK CENTRAL R.R.
ERICKSON ST. TO SYRACUSE CITY LINE
E.W. 33+10.53 = R.R. 8+00.66

PIERS (1 OF 4)

DRAWING NO. 11 OF 23

F.I.S.H. 68-4 F.I.S.H. 68-5 F.I.S.H. 68-6

FED. RD. REG. NO.	STATE	FEDERAL AID PROJECT NO.	SHEET NO.	TOTAL SHEETS
	NEW YORK	I-281-2 (103) I-690-3 (23)	207	290

INTERSTATE ROUTE CONNECTION 570
ERICKSON STREET TO SYRACUSE CITY LINE

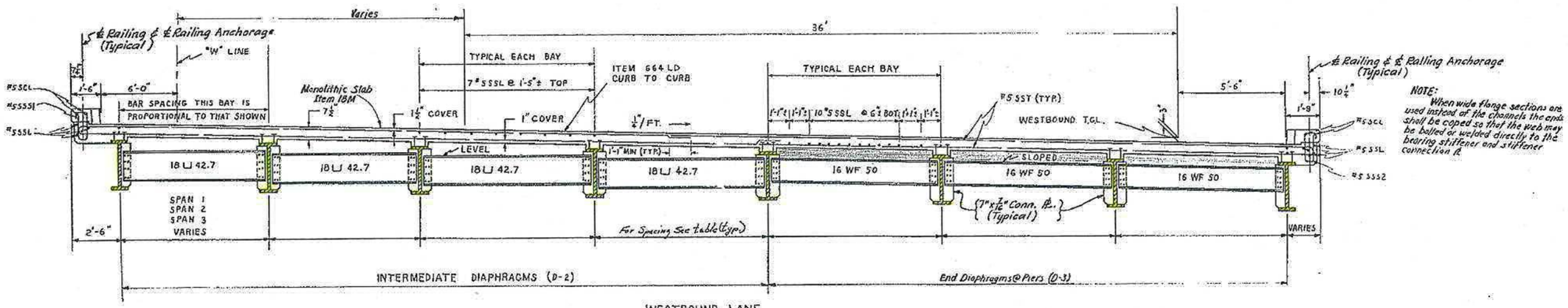

NOTE:
When wide flange sections are used instead of the channels the ends shall be coped so that the web may be bolted or welded directly to the bearing stiffener and stiffener connection ℞

WESTBOUND LANE
SCALE 3/8" = 1'-0"

PERPENDICULAR BEAM SPACING	
WESTBOUND LANE	
SPAN	DIMENSION
1	8'-9"
2	8'-9½"
3	8'-10½"

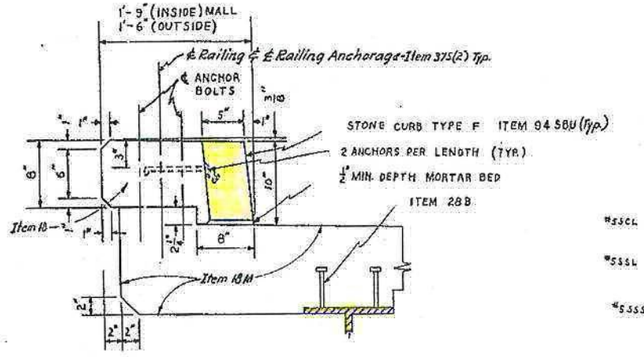

FASCIA DETAIL
SCALE 1½" = 1'-0"
reinforcement not shown

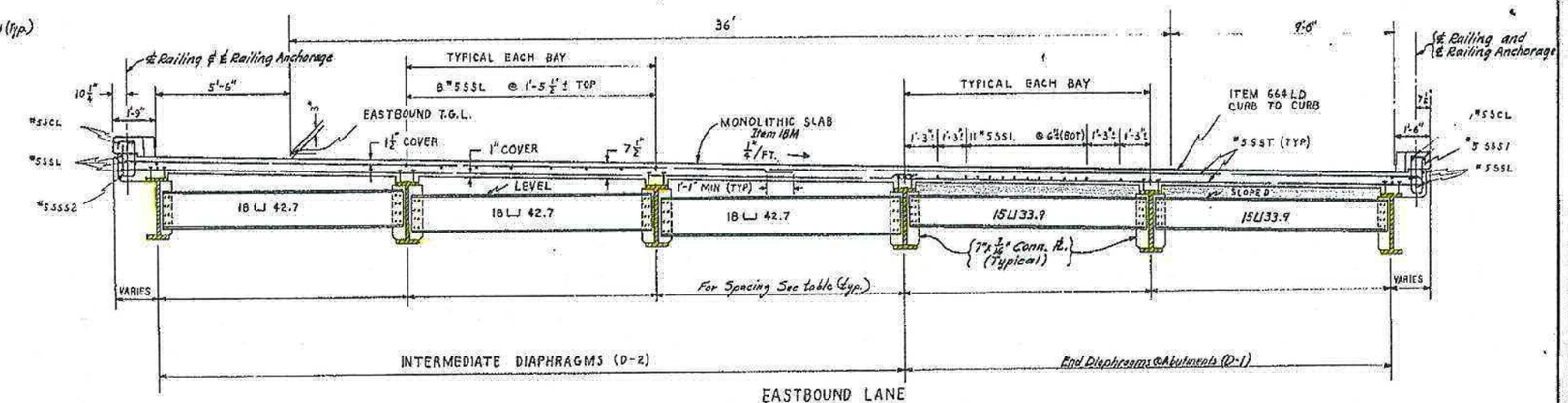

EASTBOUND LANE
SCALE 3/8" = 1'-0"

PERPENDICULAR BEAM SPACING	
EASTBOUND LANE	
SPAN	DIMENSION
1	10'-2"
2	10'-3⅛"
3	10'-3½"

PROJECT ENGINEER A. KEROLAK
IN CHARGE OF L.H. TURNER
DESIGNED BY L.H. TURNER
DESIGN CHECKED BY R.H. PERRY
DETAILED BY W.J. LEMLER
DETAIL CHECKED BY R.H. Perry

BR. NO. 1
I-690 OVER NEW YORK CENTRAL R.R.
ERICKSON ST. TO SYRACUSE CITY LINE
E.W.33+10.53 = R.R. 8+00.66

SUPERSTRUCTURE (1 OF 4)

DRAWING NO. 15 OF 23

F.I.S.H. 68-4 F.I.S.H. 68-5 F.I.S.H. 68-6P

FED. RD. REG. NO.	STATE	FEDERAL AID PROJECT NO.	SHEET NO.	TOTAL SHEETS
	NEW YORK	I-281-2 (103) I-690-3 (23)	208R1	290

INTERSTATE ROUTE CONNECTION 570
ERICKSON STREET TO SYRACUSE CITY LINE

BEAM AZIMUTHS	
BEAM NO.	AZIMUTH
1,15,~~28~~29	98°49'55.0"
2-8	99°54'24.5"
9-14	99°24'40.9"
16-22	100°38'40.5"
23-28	100°34'43.0"
30-36	101°22'56.6"
37-42	101°09'41.1"

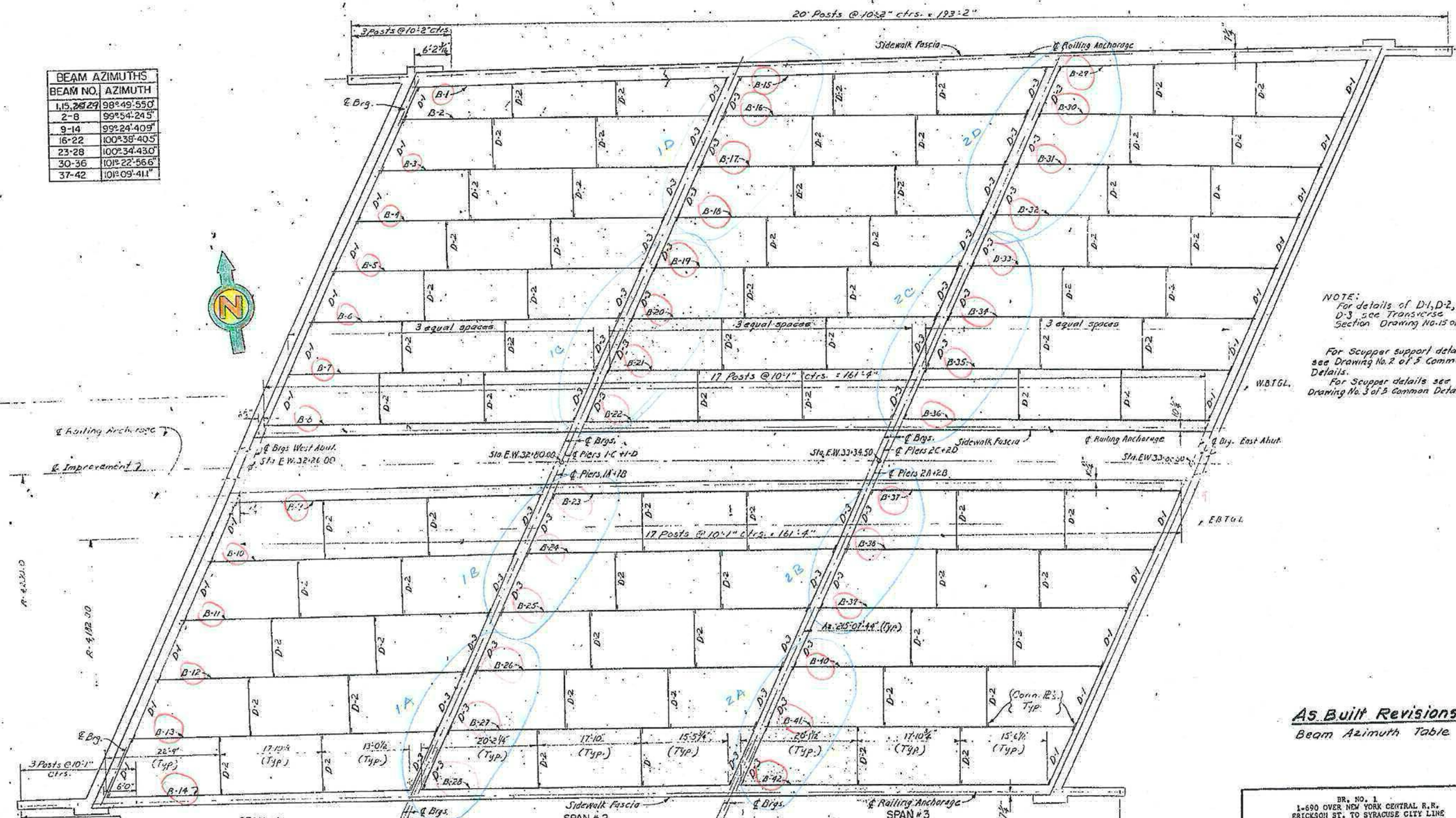

FRAMING PLAN
Scale: 1/8" = 1'-0"

NOTE:
For details of D-1, D-2, and D-3 see Transverse Section Drawing No. 15 of 23.

For Scupper support details see Drawing No. 2 of 5 Common Details.
For Scupper details see Drawing No. 3 of 5 Common Details.

As Built Revisions
Beam Azimuth Table

PROJECT ENGINEER A. KARNAK
IN CHARGE OF L. H. TURNER
DESIGNED BY L. H. TURNER
DESIGN CHECKED BY K. W. PERRY
DETAILED BY [signature]
DETAIL CHECKED BY [signature]

BR. NO. 1
I-690 OVER NEW YORK CENTRAL R.R.
ERICKSON ST. TO SYRACUSE CITY LINE
E.W. 33+10.53 = R.R. 8+00.66

SUPERSTRUCTURE (2 OF 4)

DRAWING NO. 16 OF 23

D256745

FED. ROAD REG. NO.	STATE	FEDERAL AID PROJECT NO.	SHEET NO.	TOTAL SHEETS
1	N.Y.		39	72

INTERSTATE JOINT REPLACEMENT PROJECT
ONONDAGA COUNTY
P.I.N. 3803.63

DRAFTED BY CADD DATE
CHECKED BY
CHECKED BY
DESIGNED BY
ESTIMATED BY
IN CHARGE OF

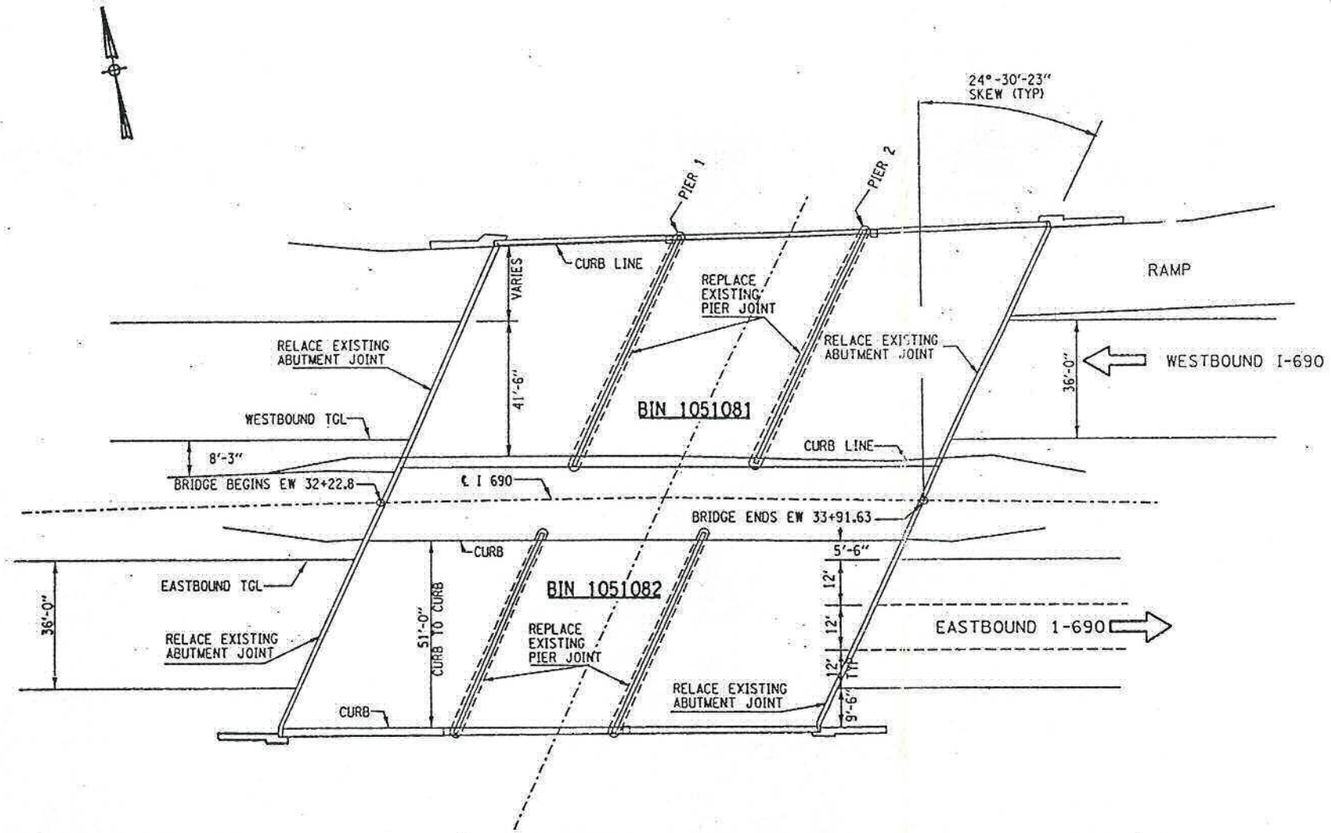

I-690 OVER CONRAIL
PLAN VIEW

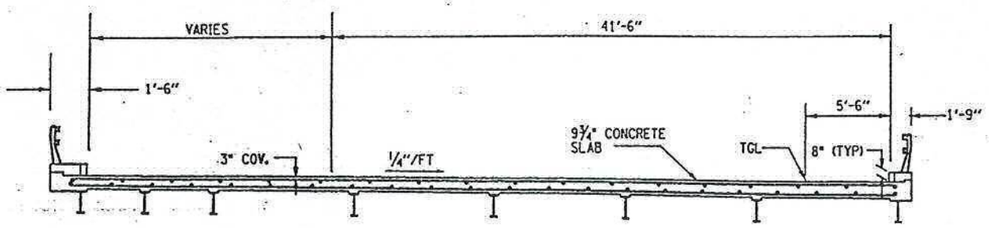

I-690 OVER CONRAIL
TRANSVERSE SECTION - WESTBOUND LANE

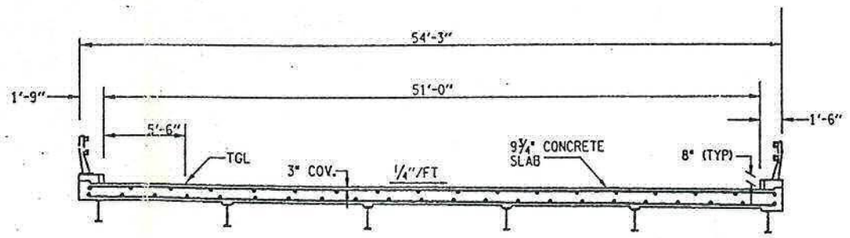

I-690 OVER CONRAIL
TRANSVERSE SECTION - EASTBOUND LANE

NOTE:
FOR JOINT INFORMATION
SEE DWG. JT-1 TO DWG. JT-3

BIN 1051081
BIN 1051082

AS-BUILT REVISIONS

completion 11-30-96

SIGNATURE DATE

PLAN & CROSS SECTION
BIN 1051081, BIN 1051082

STATE OF NEW YORK
DEPARTMENT OF TRANSPORTATION

DRAWING NO.	SCALE	DATE	REGION	SHEET NO.
R-5	NONE	7/96	3	39

D256745

FED. ROAD REC. NO.	STATE	FEDERAL AID PROJECT NO.	SHEET NO.	TOTAL SHEETS
1	N.Y.		54	72

INTERSTATE JOINT REPLACEMENT PROJECT
ONONDAGA COUNTY
P.I.N. 3803.63

DRAFTED BY CADD 380363tbdet CHECKED BY DATE
CHECKED BY ESTIMATED BY
CHECKED BY
DESIGNED BY
CHARGE OF

BRIDGE JOINT TABLE

B.I.N. NUMBER	JOINT LOCATION	JOINT SKEW	SPAN(S) LENGTH FOR JOINT	JOINT BEND LOCAT'N RT	JOINT BEND LOCAT'N LT	EXIST. JOINT TYPE	PROPOSED JOINT TYPE	CURB TO CURB DISTANCE (SEE NOTES)	FASCIA/ MEDIAN LENGTH	TOTAL LENGTH	ITEM NUMBER	DRAWING NUMBER SECT VIEW	DRAWING NUMBER PLAN VIEW	DRAWING NUMBER FASCIA DETAIL
1031639	SOUTH ABUT	——	——	N	N	ACF	A-1 MAC	33.2/24.0/34.6	9.0	97	567.31	J-4	J-1	J-11
	PIER 1	——	62	N	N	ACX	A-3 MAC	33.2/24.0/34.6	9.0	97	567.33	J-4	J-1	J-11
	PIER 2	——	62	N	N	ACX	A-3 MAC	33.2/24.0/34.6	9.0	97	567.33	J-4	J-1	J-11
	PIER 3	——	62	N	N	ACX	A-3 MAC	33.2/24.0/34.6	9.0	97	567.33	J-4	J-1	J-11
	PIER 4	——	111	N	N	ACX	A-5 MAC	33.2/24.0/34.6	9.0	97	567.35	J-4	J-1	J-11
	PIER 5	——	108	N	N	ACX	A-5 MAC	33.2/24.0/34.6	9.0	97	567.35	J-4	J-1	J-11
	PIER 6	——	83	N	N	ACX	A-4 MAC	33.2/24.0/34.6	9.0	97	567.34	J-4	J-1	J-11
	PIER 7	——	83	N	N	ACX	A-4 MAC	33.2/24.0/34.6	9.0	97	567.34	J-4	J-1	J-11
	PIER 8	——	83	N	N	ACX	A-4 MAC	33.2/24.0/34.6	9.0	97	567.34	J-4	J-1	J-11
	NORTH ABUT	——	——	N	N	ACF	A-1 MAC	33.2/24.0/34.6	9.0	97	567.31	J-4	J-1	J-11
1031701	NORTH ABUT	13°-24'-44"	——	CRB	CRB	ACF	A-1 MAC	44.42	5.0	50	567.31	J-4	J-1	J-11
	PIER 1	13°-24'-44"	50	CRB	CRB	ACX	A-2 MAC	44.42	5.0	50	567.32	J-4	J-1	J-11
	PIER 2	13°-24'-44"	101	CRB	CRB	ACX	A-5 MAC	44.42	5.0	50	567.35	J-4	J-1	J-11
	SOUTH ABUT	13°-24'-44"	——	CRB	CRB	ACF	A-1 MAC	44.42	5.0	50	567.31	J-4	J-1	J-11
1031702	NORTH ABUT	8°-26'-07"	——	CRB	CRB	ACF	A-1 MAC	43.68	5.0	49	567.31	J-4	J-1	J-11
	PIER 1	8°-26'-07"	59	CRB	CRB	ACX	A-2 MAC	43.68	5.0	49	567.32	J-4	J-1	J-11
	PIER 2	8°-26'-07"	110	CRB	CRB	ACX	A-5 MAC	43.68	5.0	49	567.35	J-4	J-1	J-11
	SOUTH ABUT	8°-26'-07"	——	CRB	CRB	ACF	A-1 MAC	43.68	5.0	49	567.31	J-4	J-1	J-11
1049649	EAST ABUT	47°-38'-00"	——	N/N	N/N	ACE	A-1 MAC	79.99/78.88	7.0/7.0	173	567.31	J-4	J-1	J-11
	WEST ABUT	47°-38'-00"	——	N	N	ACE	A-1 MAC	78.88	7.0	86	567.31	J-4	J-1	J-11
1049659	WEST ABUT	13°-00'-40"	32	N	N	ACX	A-2 MAC	55.15/54.36	4.0/4.0	118	567.32	J-5	J-1	J-11
	PIER 1	13°-00'-40"	71	N	N	ACE	A-3 MAC	55.15/54.36	4.0/4.0	118	567.33	J-5	J-2	J-11
	PIER 2	13°-00'-40"	32	N	N	ACE	A-2 MAC	55.15/54.36	4.0/4.0	118	567.32	J-5	J-2	J-11
	EAST ABUT	13°-00'-40"	——	N	N	ACE	A-1 MAC	55.15/54.36	4.0/4.0	118	567.31	J-4	J-1	J-11
1051081	WEST ABUT	24°-30'-23"	53	CRB	N	ACX	A-2 MAC	64.4	5.0	70	567.32	J-6	J-2	J-11
	PIER 1	24°-30'-23"	——	N	N	ACF	A-1 MAC	66.5	5.0	72	567.31	J-5	J-2	J-11
	PIER 2	24°-30'-23"	53	N	N	ACX	A-2 MAC	68.6	5.0	74	567.32	J-5	J-2	J-11
	EAST ABUT	24°-30'-23"	53	CRB	N	ACX	A-2 MAC	70.7	5.0	76	567.32	J-6	J-2	J-11
1051082	WEST ABUT	24°-30'-23"	53	N	CRB	ACX	A-2 MAC	56.0	5.0	61	567.32	J-6	J-2	J-11
	PIER 1	24°-30'-23"	——	N	N	ACF	A-1 MAC	56.0	5.0	61	567.31	J-5	J-2	J-11
	PIER 2	24°-30'-23"	53	N	N	ACX	A-2 MAC	56.0	5.0	61	567.32	J-5	J-2	J-11
	EAST ABUT	24°-30'-23"	53	N	CRB	ACX	A-2 MAC	56.0	5.0	61	567.32	J-6	J-2	J-11
1051120	SOUTH ABUT	6°-49'-46"	90	N	N	ACX	A-5 MAC	63.45	5.0	69	567.35	J-6	J-1	J-11
	NORTH ABUT	6°-49'-46"	——	N	N	ANGLE	——	63.45	——	64	——	J-6	——	——

LEGEND

EXISTING JOINT TYPE

ACE = ARMORED COMPRESSION-ELASTOMERIC
ACF = ARMORED COMPRESSION-FIXED
ACX = ARMORED COMPRESSSION-EXPANSION
MOD2 = MODULAR EXPANSION TYPE II
MOD3 = MODULAR EXPANSION TYPE III
WF = WABO-FLEX

PROPOSED JOINT TYPE

A-'X' MAC = MODIFIED ARMORED COMPRESSION SEAL

S'X'00 STP = STRIP SEAL JOINT

JOINT BEND LOCATION

N = NO BENDS
CRB = CURB LINE
PAV'T = PAVEMENT

NOTES:

- ALL MEASUREMENTS TO BE FIELD VERIFIED
- CURB TO CURB LENGTHS ARE MEASURED ALONG ℄ OF JOINT
- MULTIPLE DIMENSIONS ARE SHOWN LOOKING UP-STATION, LEFT TO RIGHT
- ALL DIMENSIONS ARE SHOWN IN FEET

AS-BUILT REVISIONS

SIGNATURE DATE

BRIDGE JOINT TABLE-1

STATE OF NEW YORK
DEPARTMENT OF TRANSPORTATION

DRAWING NO. | SCALE | DATE | ..... | SHEET NO.

D256745

FED. ROAD REG. NO.	STATE	FEDERAL AID PROJECT NO.	SHEET NO.	TOTAL SHEETS
1	N.Y.		62	72

INTERSTATE JOINT REPLACEMENT PROJECT
ONONDAGA COUNTY
P.I.N. 3803.63

DRAFTED BY CADD DATE
CHECKED BY
CHECKED BY
ESTIMATED BY
CHECKED BY
DESIGNED BY
IN CHARGE OF

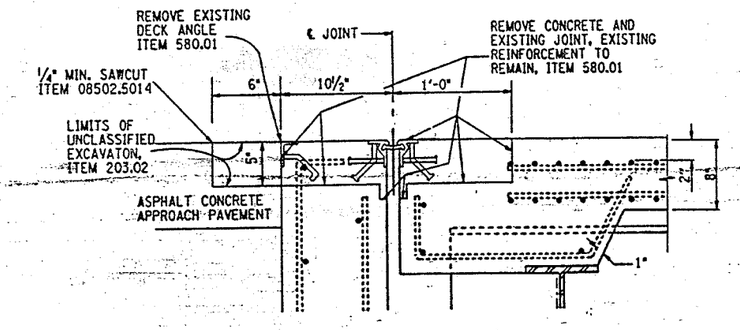

EXISTING ABUTMENT JOINT

BIN 1051081 - BOTH ABUTS
BIN 1051082 - BOTH ABUTS
BIN 1051120 - SOUTH ABUT
BIN 1051149 - BOTH ABUTS
BIN 1051159 - BOTH ABUTS
BIN 1064691 - EAST ABUT
BIN 1064692 - EAST ABUT
BIN 1053969 - EAST ABUT
BIN 1093530 - SOUTH ABUT

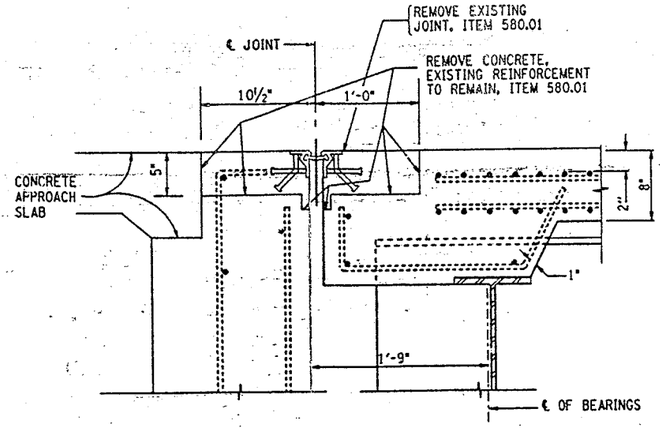

EXISTING ABUTMENT JOINT

BIN 1053881 - SOUTH ABUT
BIN 1064691 - WEST ABUT
BIN 1064692 - WEST ABUT

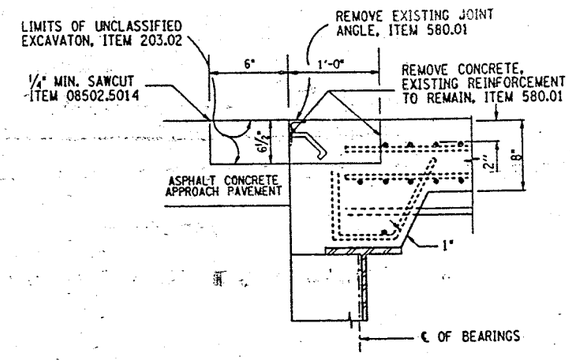

EXISTING ABUTMENT JOINT

BIN 1051120 - SOUTH ABUT

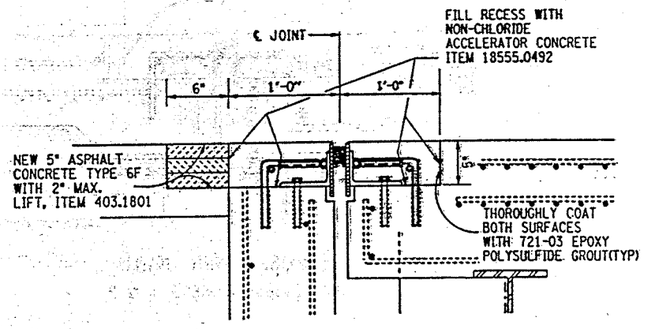

PROPOSED ABUTMENT JOINT

BIN 1051081 - BOTH ABUTS
BIN 1051082 - BOTH ABUTS
BIN 1051120 - SOUTH ABUT
BIN 1051149 - BOTH ABUTS
BIN 1051159 - BOTH ABUTS
BIN 1064691 - EAST ABUT
BIN 1064692 - EAST ABUT
BIN 1053969 - EAST ABUT
BIN 1093530 - SOUTH ABUT

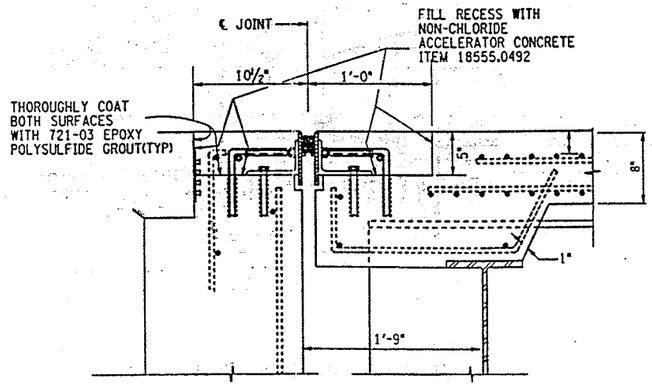

PROPOSED ABUTMENT JOINT

BIN 1053881 - SOUTH ABUT
BIN 1064691 - WEST ABUT
BIN 1064692 - WEST ABUT

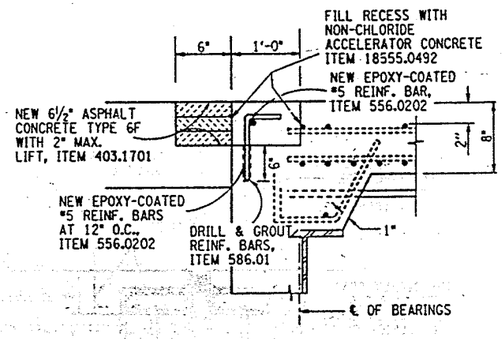

PROPOSED ABUTMENT JOINT

BIN 1051120 - NORTH ABUT

AS-BUILT REVISIONS

SIGNATURE DATE

JOINT REPLACEMENT DETAILS

STATE OF NEW YORK
DEPARTMENT OF TRANSPORTATION

DRAWING NO.	SCALE	DATE	REGION	SHEET NO.
J-6	NONE	7/95	3	62

D256745

FED. ROAD REG. NO.	STATE	FEDERAL AID PROJECT NO.	SHEET NO.	TOTAL SHEETS
1	N.Y.		58	72

INTERSTATE JOINT REPLACEMENT PROJECT
ONONDAGA COUNTY
P.I.N. 3803.63

DRAWN BY CADD DATE
CHECKED BY
ESTIMATED BY
CHECKED BY
DESIGNED BY
CHECKED BY
IN CHARGE OF

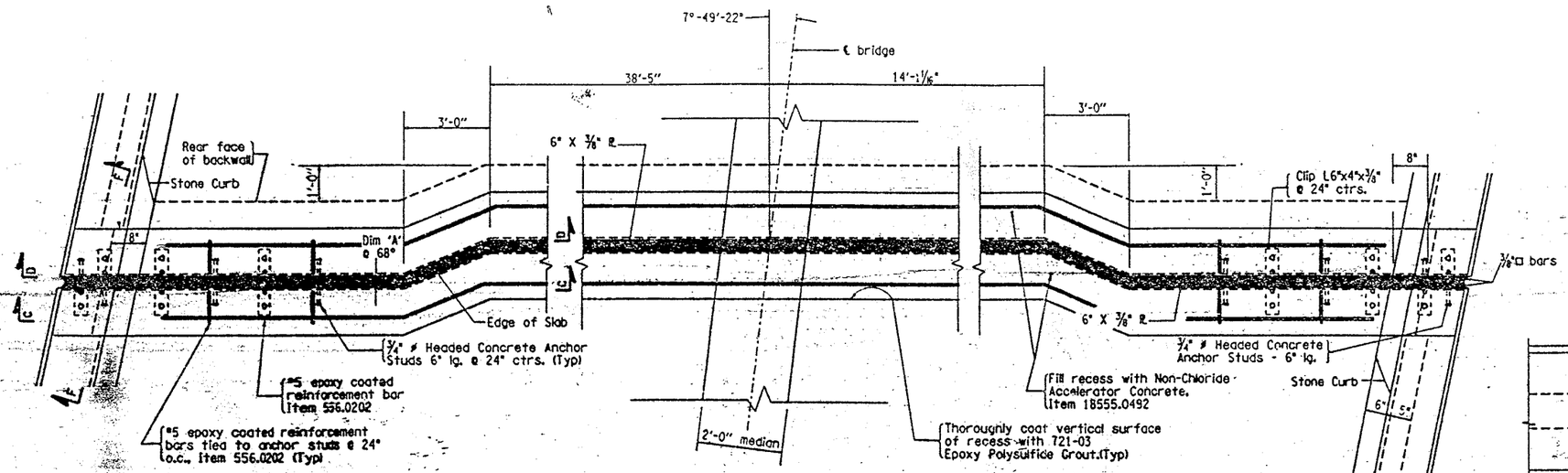

PROPOSED ABUTMENT JOINT

BIN 1053969 - EAST ABUT

NOTES:

FOR CROSS SECTION VIEWS OF JOINTS, SEE DWGS. J-4 TO J-9

FOR SECTIONS C-C, D-D, F-F, AND I-I SEE DWG J-10

FOR MEDIAN DETAILS, SEE DWG J-13

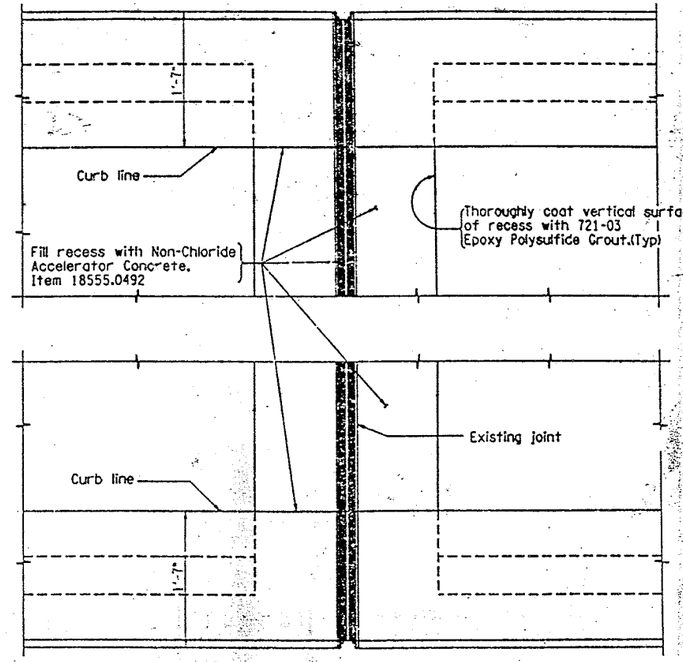

PROPOSED JOINT

BIN 1071341 - PIERS 3, 6, 9
BIN 1071341 - NORTH ABUT
BIN 1071342 - BOTH ABUTS
BIN 1071342 - PIERS 1, 2, 4, 6, 9

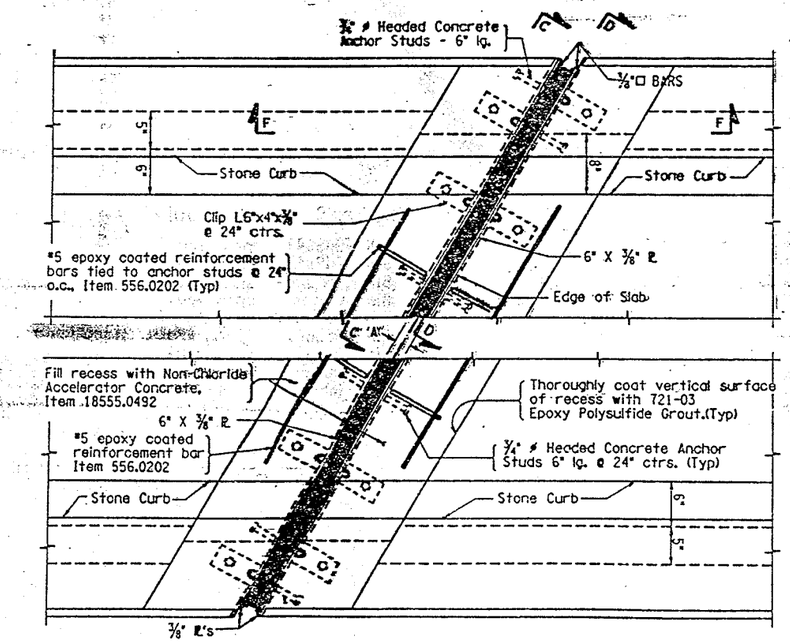

PROPOSED PIER JOINT

BIN 1049659 - PIERS 1,2
BIN 1051081 - PIERS 1,2
BIN 1051082 - PIERS 1,2
BIN 1064691 - PIERS 1,
BIN 1064692 - PIERS 1,

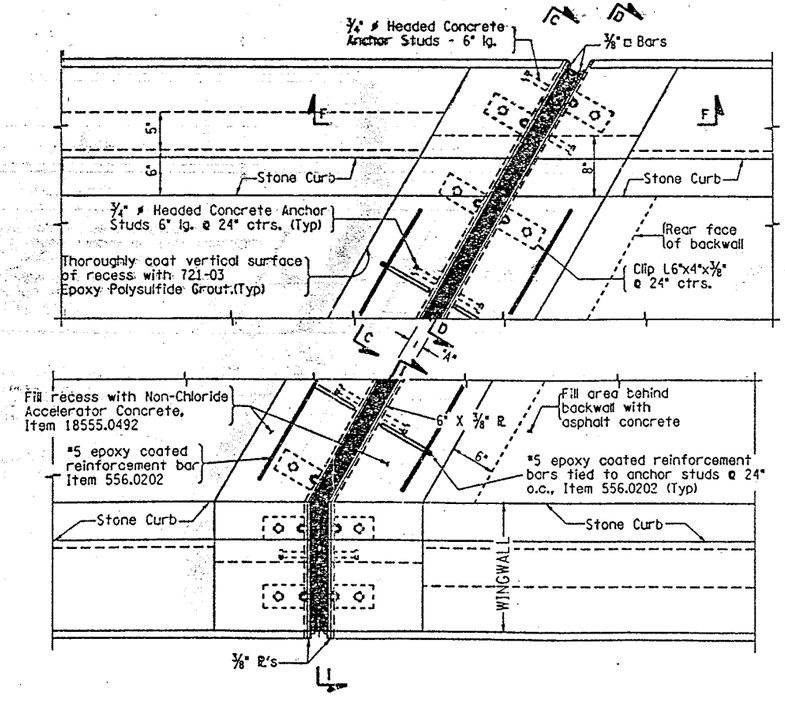

PROPOSED ABUTMENT JOINT

BIN 1051081 - BOTH ABUTS
BIN 1051082 - BOTH ABUTS

AS-BUILT REVISIONS

SIGNATURE DATE

BRIDGE JOINT DETAILS
PLAN VIEWS

STATE OF NEW YORK
DEPARTMENT OF TRANSPORTATION

DRAWING No.	SCALE	DATE	REGION	SHEET NO.
J-2	NONE	7/95	3	58

BIN 1051082
Bin folder Copy

IT IS A VIOLATION OF LAW FOR ANY PERSON, UNLESS THEY ARE ACTING UNDER THE DIRECTION OF A LICENSED PROFESSIONAL ENGINEER, ARCHITECT, LANDSCAPE ARCHITECT, OR LAND SURVEYOR, TO ALTER AN ITEM IN ANY WAY. IF AN ITEM BEARING THE STAMP OF A LICENSED PROFESSIONAL IS ALTERED, THE ALTERING ENGINEER, ARCHITECT, LANDSCAPE ARCHITECT, OR LAND SURVEYOR SHALL STAMP THE DOCUMENT AND INCLUDE THE NOTATION "ALTERED BY" FOLLOWED BY THEIR SIGNATURE, THE DATE OF SUCH ALTERATION, AND A SPECIFIC DESCRIPTION OF THE ALTERATION.

DESIGN SUPERVISOR JOHN SEXTON JOB MANAGER JIM DUSSING DESIGNED BY RAY MATHURA CHECKED BY MIKE RYAN
DRAFTED BY KATHY BAKER CHECKED BY MIKE RYAN
ESTIMATED BY

FILE NAME = 3M0904_01_CPB_TRNS_SEC.DGN
DATE/TIME = 20-MAY-2010 10:55
USER = rmathuranoyogam

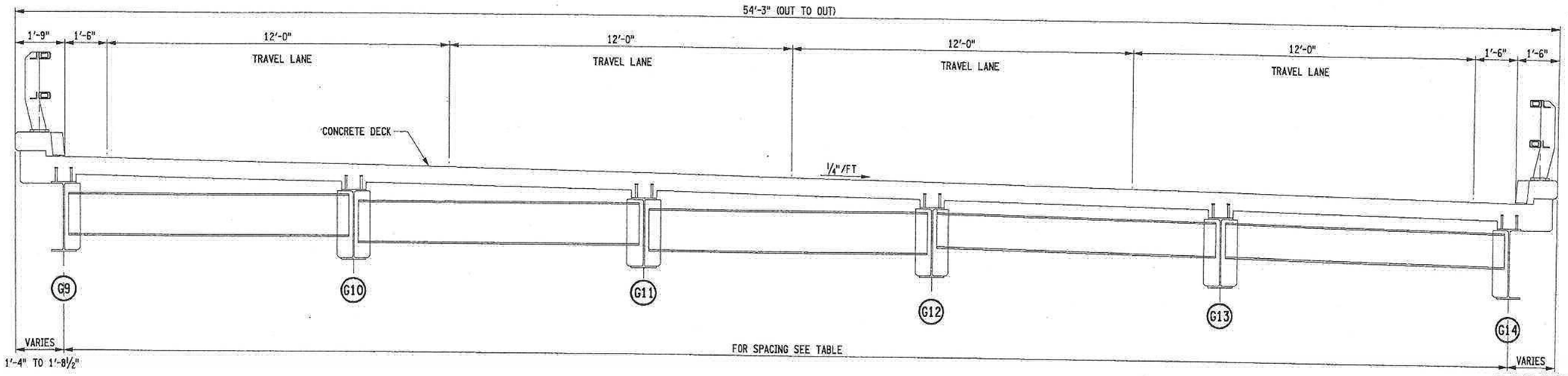

TRANSVERSE SECTION

PERPENDICULAR BEAM SPACING	
SPAN	DIMENSION
1	10'-2"
2	10'-3⅛"
3	10'-3¾"

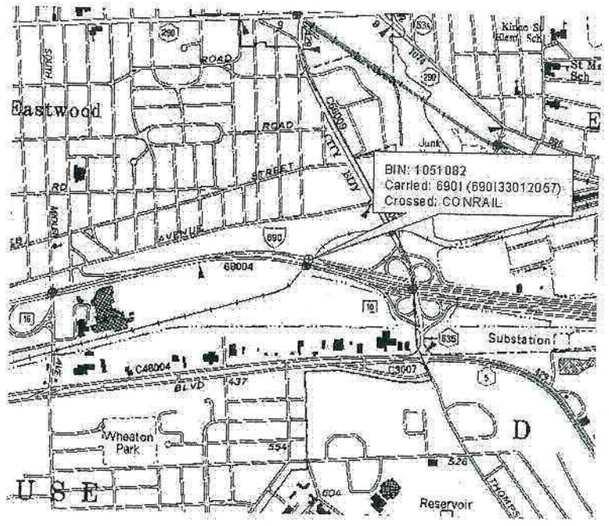

LOCATION MAP

PREPARED BY: 5/25/10 ON:

ALTERED BY: ON:

STATE OF NEW YORK
JAMES MICHAEL DUSSING
LICENSED PROFESSIONAL ENGINEER
NO. 077475

LEGEND:

(G#) - GIRDER NUMBER

AS BUILT REVISIONS
DESCRIPTION OF WORK:

SIGNATURE DATE

DOCUMENT NAME: 3M0904_01_CPB_TRNS_SEC.DGN

BRIDGE JOB ORDER CONTRACT - VARIOUS LOCATIONS
I-690 WESTBOUND OVER CSXT AND PEAT STREET
CITY OF SYRACUSE
COUNTY: ONONDAGA

PIN 3M09.04
PS&E DATE

BRIDGES 1051082

CULVERTS

ALL DIMENSIONS IN ft UNLESS OTHERWISE NOTED

TRANSVERSE SECTION

CONTRACT NUMBER

DRAWING NO. ST-01
SHEET NO. 1

NEW YORK STATE DEPARTMENT OF TRANSPORTATION REGION 03

IT IS A VIOLATION OF LAW FOR ANY PERSON, UNLESS THEY ARE ACTING UNDER THE DIRECTION OF A LICENSED PROFESSIONAL ENGINEER, ARCHITECT, LANDSCAPE ARCHITECT, OR LAND SURVEYOR, TO ALTER AN ITEM IN ANY WAY. IF AN ITEM BEARING THE STAMP OF A LICENSED PROFESSIONAL IS ALTERED, THE ALTERING ENGINEER, ARCHITECT, LANDSCAPE ARCHITECT, OR LAND SURVEYOR SHALL STAMP THE DOCUMENT AND INCLUDE THE NOTATION "ALTERED BY" FOLLOWED BY THEIR SIGNATURE, THE DATE OF SUCH ALTERATION, AND A SPECIFIC DESCRIPTION OF THE ALTERATION.

ESTIMATED BY MIKE RYAN DRAFTED BY KATHY BAKER CHECKED BY MIKE RYAN

DESIGNED BY RAY MATHURA CHECKED BY

JOB MANAGER JIM DUSSING

DESIGN SUPERVISOR JOHN SEXTON

FILE NAME = 3M0904_02_CPB_ABUT_BEGIN.DGN
DATE/TIME = 25-MAY-2010 10:18
USER = mjryan

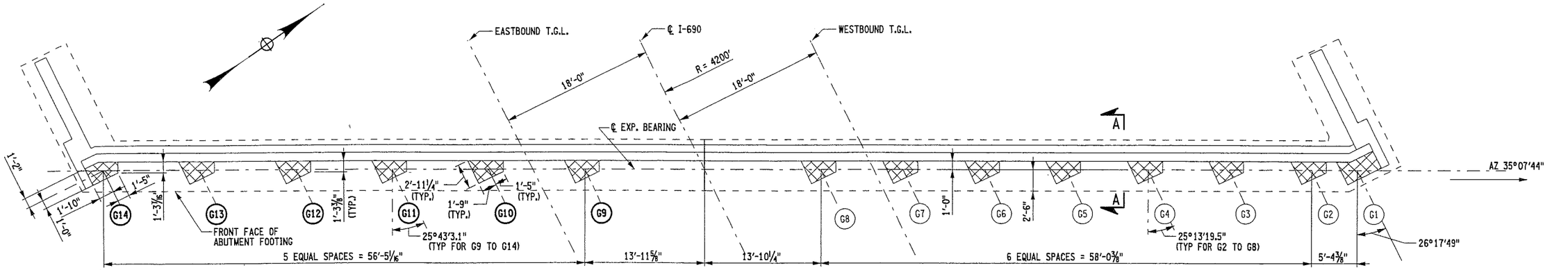

PLAN

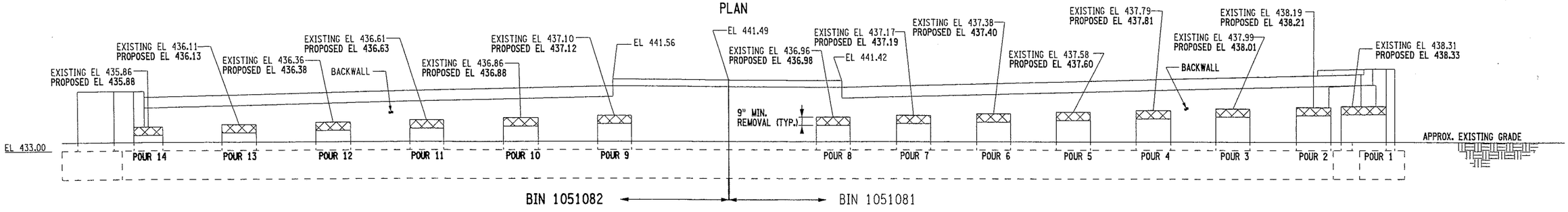

ELEVATION

CONCRETE TABLE (CY)		
BEGIN ABUTMENT		
POUR	ITEM 580.01	ITEM 555.09
9	0.28	0.27
10	0.28	0.27
11	0.28	0.27
12	0.28	0.27
13	0.28	0.27
14	0.29	0.28

PROTECTIVE SEALER (SF)	
BEGIN ABUTMENT	
ITEM 559.1696 18	537.84

TABLE OF STRUCTURAL LIFTING -BEGIN ABUTMENT-ITEM 585.01																		
GIRDER 9			GIRDER 10			GIRDER 11			GIRDER 12			GIRDER 13			GIRDER 14			
D.L	LL+I	T.L.	D.L	LL+I	T.L.	D.L	LL+I	T.L.	D.L	LL+I	T.L.	D.L	LL+I	T.L.	D.L	LL+I	T.L.	
32	39	71	39	78	117	39	78	117	39	78	117	39	78	117	32	39	71	

NOTE: ALL JACKING LOADS ARE UNFACTORED, LOCATED AT CENTER BEARINGS AND ARE IN KIPS.

NOTES:

1. PEDESTALS ARE NUMBERED AS SHOWN ON THE PLAN. SEE DWG. NO. ST-10 AND ST-11
2. EXISTING ELEVATIONS AND DIMENSIONS ARE FROM CONTRACT F.I.S.H. 68-4 AND ARE FOR REFERENCE ONLY.
3. CONTRACTOR SHALL REMOVE ALL DEBRIS FROM THE TOP OF THE PEDESTALS PRIOR TO SETTING NEW BEARINGS. COST TO BE INCLUDED IN THE BID PRICE FOR VARIOUS ITEMS IN CONTRACT.
4. FOR ANCHOR STUD DETAILS SEE DWG. NO. ST-14
5. FOR ANCHOR BOLT LAYOUT DETAILS SEE DWG. NO. ST-06.
6. FOR BAR LIST DETAILS SEE DWG. NO. ST-16 AND ST-17
7. FOR REINFORCEMENT DETAILS SEE DWG. NO. ST-06
8. THE CONTRACTOR SHALL FIELD VERIFY THE HEIGHT OF EXISTING BEARINGS AND COMPARE THEM WITH HEIGHT OF PROPOSED BEARINGS TO VERIFY THE NEW TOP OF PEDESTAL ELEVATIONS SHOWN ON THE CONTRACT PLANS. (SEE DWG. NO. ST-15 FOR PEDESTAL HEIGHT TABLE)
9. THE CONTRACTOR SHALL PROVIDE ¾" DEEP SAW CUT BETWEEN THE CONCRETE TO BE REMOVED AND THE CONCRETE TO REMAIN. THE COST OF THE SAWCUT SHALL BE PAID FOR UNDER ITEM 580.01.
10. APPLY PROTECTIVE SEALING, ITEM 18559.1696 TO ALL EXPOSED SUBSTRUCTURE SURFACES.

STRUCTURAL LIFTING NOTES:

11. LIFTING SHALL BE CONFINED TO ONE END OF A SPAN AT ANY ONE TIME.
12. VEHICULAR TRAFFIC CAN BE MAINTAINED DURING BEAM JACKING OPERATIONS AS LONG AS THE CONTRACTOR ONLY JACKS A SINGLE GIRDER AT A TIME TO A MAXIMUM OF ⅛".
13. ANY DAMAGED BRIDGE PAINT RESULTING FROM STRUCTURAL LIFTING (I.E.-WHERE CLAMPS ARE ATTACHED TO BOTTOM FLANGE) SHALL BE REPAIRED BY THE CONTRACTOR FOLLOWING THE REQUIREMENTS OF ITEM 574.01NNNN, COST TO BE INCLUDED IN THE BID PRICE FOR ITEM 585.01.
14. THE CONTRACTOR SHALL PROVIDE AND HAVE ON HAND AT THE PROJECT SITE, TEMPORARY SHORING/JACKING STANDBY SUPPORT SYSTEMS AVAILABLE FOR STRUCTURAL SUPPORT EMERGENCIES AS DIRECTED BY THE E.I.C.
15. THE CONTRACTOR SHALL HAVE THE GIRDERS/BEAMS STRUCTURALLY LIFTED PRIOR TO THE REMOVAL OF ANY CONCRETE ON PEDESTALS.
16. ONLY ONE STRUCTURAL LIFTING PAYMENT WILL BE MADE FOR EACH END OF GIRDER REGARDLESS OF THE NUMBER OF TIMES THE GIRDER IS LIFTED.

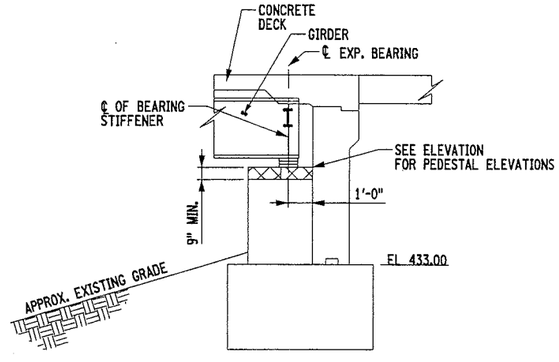

SECTION A-A

G* - GIRDER NUMBER

LEGEND:

- ITEM 580.01 REMOVAL OF STRUCTURAL CONCRETE

CONTRACTOR SHALL REMOVE CONCRETE AROUND ALL EXISTING VERTICAL REINFORCING BARS TO REMAIN IN THE PEDESTAL.

PREPARED BY: 5/25/10
ON:

ALTERED BY:
ON:

STATE OF NEW YORK
JAMES MICHAEL DUSSING
LICENSED PROFESSIONAL ENGINEER
NO. 077475

AS BUILT REVISIONS
DESCRIPTION OF WORK:

SIGNATURE DATE

BRIDGE JOB ORDER CONTRACT - VARIOUS LOCATIONS
I-690 WESTBOUND OVER CSXT AND PEAT STREET
CITY OF SYRACUSE
COUNTY: ONONDAGA

PIN 3M09.04
PS&E DATE

BRIDGES 1051082

CULVERTS

ALL DIMENSIONS IN ft UNLESS OTHERWISE NOTED

BEGIN ABUTMENT
PLAN AND ELEVATION

CONTRACT NUMBER

DRAWING NO. ST-02
SHEET NO. 2

DOCUMENT NAME: 3M0904_02_CPB_ABUT_BEGIN.DGN

NEW YORK STATE DEPARTMENT OF TRANSPORTATION REGION 03

IT IS A VIOLATION OF LAW FOR ANY PERSON, UNLESS THEY ARE ACTING UNDER THE DIRECTION OF A LICENSED PROFESSIONAL ENGINEER, ARCHITECT, LANDSCAPE ARCHITECT, OR LAND SURVEYOR, TO ALTER AN ITEM IN ANY WAY. IF AN ITEM BEARING THE STAMP OF A LICENSED PROFESSIONAL IS ALTERED, THE ALTERING ENGINEER, ARCHITECT, LANDSCAPE ARCHITECT, OR LAND SURVEYOR SHALL STAMP THE DOCUMENT AND INCLUDE THE NOTATION "ALTERED BY" FOLLOWED BY THEIR SIGNATURE, THE DATE OF SUCH ALTERATION, AND A SPECIFIC DESCRIPTION OF THE ALTERATION.

DESIGN SUPERVISOR JOHN SEXTON JOB MANAGER JIM DUSSING DESIGNED BY RAY MATHURA CHECKED BY MIKE RYAN
DRAFTED BY KATHY BAKER CHECKED BY MIKE RYAN
ESTIMATED BY

FILE NAME = 3M0904_03_CPB_PIER1_PLAN.DGN
DATE/TIME = 20-MAY-2010 10:51
USER = rmathuramoyagam

NOTES:

1. PEDESTALS ARE NUMBERED AS SHOWN ON THE PLAN. SEE DRAWING ST-10 AND ST-11
2. EXISTING ELEVATIONS AND DIMENSIONS ARE FROM CONTRACT F.I.S.H. 68-4 AND ARE FOR REFERENCE ONLY.
3. CONTRACTOR SHALL REMOVE ALL DEBRIS FROM THE TOP OF PEDESTALS PRIOR TO SETTING NEW BEARINGS. COST TO BE INCLUDED IN THE BID PRICE FOR VARIOUS ITEMS IN CONTRACT.
4. FOR ANCHOR STUD DETAILS SEE DWG. NO. ST-14
5. FOR ANCHOR BOLT LAYOUT DETAILS SEE DWG. NO. ST-07
6. FOR BAR LIST DETAILS SEE DWG. NO. ST-16 AND ST-17
7. FOR REINFORCEMENT DETAILS SEE DWG. NO. ST-07
8. THE CONTRACTOR SHALL FIELD VERIFY THE HEIGHT OF EXISTING BEARINGS AND COMPARE THEM WITH HEIGHT OF PROPOSED BEARINGS TO VERIFY THE NEW TOP OF PEDESTAL ELEVATIONS SHOWN ON THE CONTRACT PLANS. (SEE DWG. NO. ST-15)
9. THE CONTRACTOR SHALL PROVIDE ¾" DEEP SAW CUT BETWEEN THE CONCRETE TO BE REMOVED AND THE CONCRETE TO REMAIN. THE COST OF THE SAWCUT SHALL BE PAID FOR UNDER ITEM 580.01.
10. APPLY PROTECTIVE SEALING, ITEM 18559.1696 TO ALL EXPOSED SUBSTRUCTURE SURFACES.

STRUCTURAL LIFTING NOTES:

11. LIFTING SHALL BE CONFINED TO ONE END OF A SPAN AT ANY ONE TIME.
12. VEHICULAR TRAFFIC CAN BE MAINTAINED DURING BEAM JACKING OPERATIONS AS LONG AS THE CONTRACTOR ONLY JACKS A SINGLE GIRDER AT A TIME TO A MAXIMUM OF ⅛".
13. ANY DAMAGED BRIDGE PAINT RESULTING FROM STRUCTURAL LIFTING (I.E. WHERE CLAMPS ARE ATTACHED TO BOTTOM FLANGE) SHALL BE REPAIRED BY THE CONTRACTOR FOLLOWING THE REQUIREMENTS OF ITEM 574.01NNNN, COST TO BE INCLUDED IN THE BID PRICE FOR ITEM 585.01.
14. THE CONTRACTOR SHALL PROVIDE AND HAVE ON HAND AT THE PROJECT SITE, TEMPORARY SHORING/JACKING STANDBY SUPPORT SYSTEMS AVAILABLE FOR STRUCTURAL SUPPORT EMERGENCIES AS DIRECTED BY THE E.I.C.
15. THE CONTRACTOR SHALL HAVE THE GIRDERS/BEAMS STRUCTURALLY LIFTED PRIOR TO THE REMOVAL OF ANY CONCRETE ON PEDESTALS.
16. ONLY ONE STRUCTURAL LIFTING PAYMENT WILL BE MADE FOR EACH END OF GIRDER REGARDLESS OF THE NUMBER OF TIMES THE GIRDER IS LIFTED.

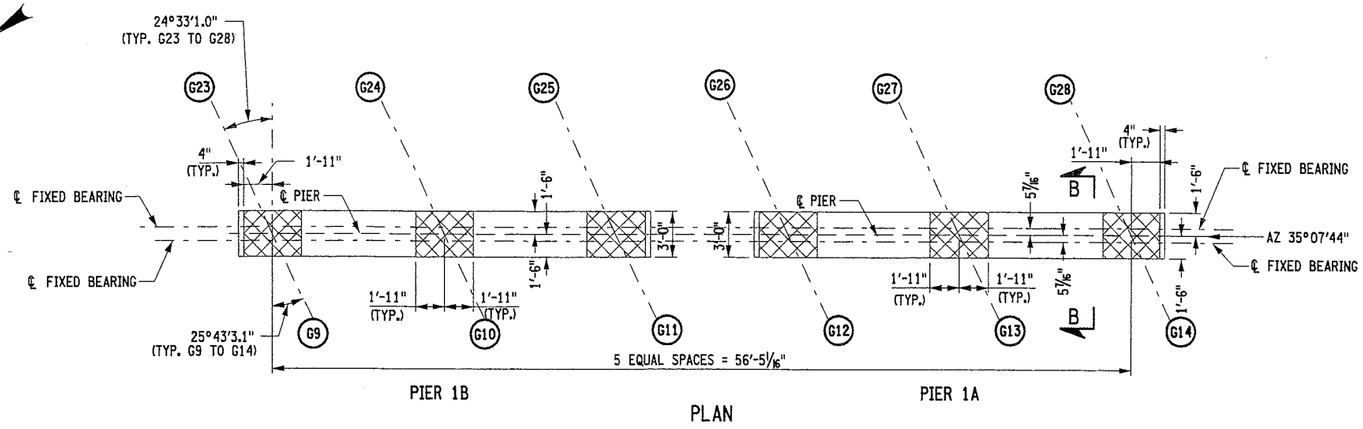

PLAN

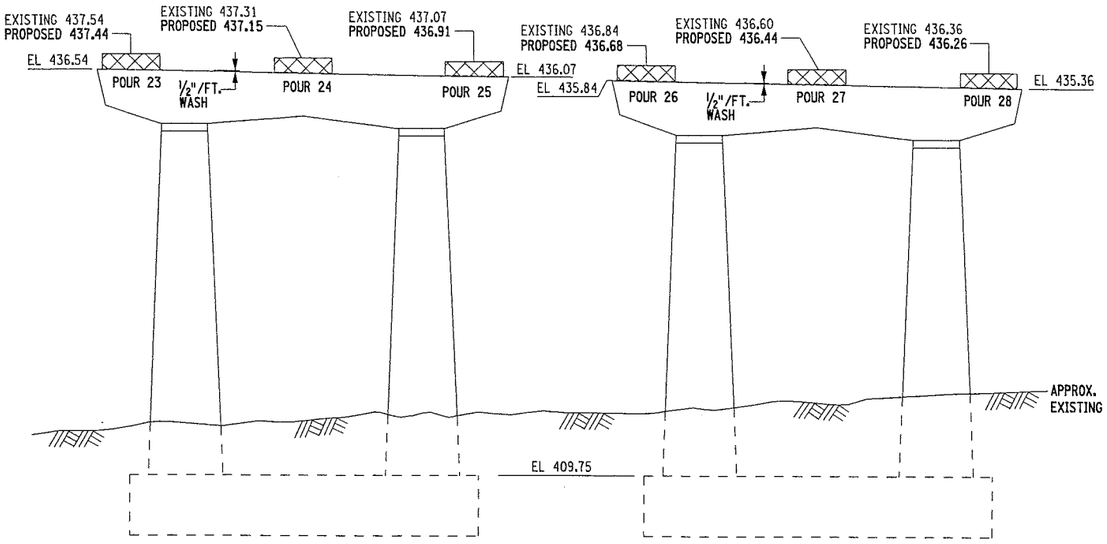

ELEVATION

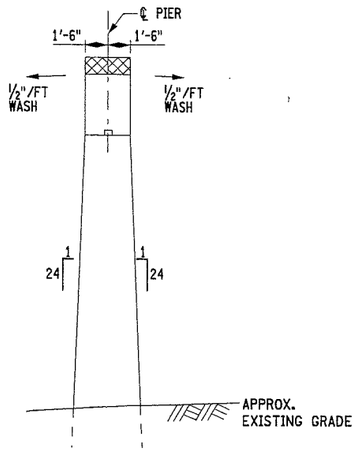

SECTION B-B

CONCRETE TABLE (CY)		
PIER 1		
POUR	ITEM 580.01	ITEM 555.09
23	0.40	0.44
24	0.39	0.43
25	0.37	0.41
26	0.40	0.44
27	0.38	0.43
28	0.37	0.41

TABLE OF STRUCTURAL LIFTING - PIER 1 - ITEM 585.01

GIRDER 9			GIRDER 10			GIRDER 11			GIRDER 12			GIRDER 13			GIRDER 14		
D.L	LL+I	T.L.	D.L	LL+I	T.L.	D.L	LL+I	T.L.	D.L	LL+I	T.L.	D.L	LL+I	T.L.	D.L	LL+I	T.L.
32	39	71	39	78	117	39	78	117	39	78	117	39	78	117	32	39	71
GIRDER 23			GIRDER 24			GIRDER 25			GIRDER 26			GIRDER 27			GIRDER 28		
D.L	LL+I	T.L.	D.L	LL+I	T.L.	D.L	LL+I	T.L.	D.L	LL+I	T.L.	D.L	LL+I	T.L.	D.L	LL+I	T.L.
32	39	71	39	78	117	39	78	117	39	78	117	39	78	117	32	39	71

NOTE: ALL JACKING LOADS ARE UNFACTORED, LOCATED AT CENTER BEARINGS AND ARE IN KIPS.

PROTECTIVE SEALER (SF)	
PIER 1	
ITEM 559.1696 18	1954.30

(G•) - GIRDER NUMBER

LEGEND:

▨ - ITEM 580.01 REMOVAL OF STRUCTURAL CONCRETE

CONTRACTOR SHALL REMOVE CONCRETE AROUND ALL EXISTING VERTICAL REINFORCING BARS TO REMAIN IN THE PEDESTAL.

PREPARED BY:	ON: 5/25/10	ALTERED BY:	ON:

STATE OF NEW YORK · JAMES MICHAEL DUSSING · LICENSED PROFESSIONAL ENGINEER · NO. 077475

AS BUILT REVISIONS
DESCRIPTION OF WORK:

SIGNATURE _____ DATE _____

BRIDGE JOB ORDER CONTRACT - VARIOUS LOCATIONS	PIN 3M09.04	BRIDGES 1051082	CULVERTS	ALL DIMENSIONS IN ft UNLESS OTHERWISE NOTED
I-690 WESTBOUND OVER CSXT AND PEAT STREET	PS&E DATE			PIER 1A AND 1B PLAN AND ELEVATION
CITY OF SYRACUSE				CONTRACT NUMBER
COUNTY: ONONDAGA				DRAWING NO. ST-03 SHEET NO. 3

DOCUMENT NAME: 3M0904_03_CPB_PIER1_PLAN.DGN

NEW YORK STATE DEPARTMENT OF TRANSPORTATION REGION 03

IT IS A VIOLATION OF LAW FOR ANY PERSON, UNLESS THEY ARE ACTING UNDER THE DIRECTION OF A LICENSED PROFESSIONAL ENGINEER, ARCHITECT, LANDSCAPE ARCHITECT, OR LAND SURVEYOR, TO ALTER AN ITEM IN ANY WAY.
IF AN ITEM BEARING THE STAMP OF A LICENSED PROFESSIONAL IS ALTERED, THE ALTERING ENGINEER, ARCHITECT, LANDSCAPE ARCHITECT, OR LAND SURVEYOR SHALL STAMP THE DOCUMENT AND INCLUDE THE NOTATION "ALTERED BY" FOLLOWED BY THEIR SIGNATURE, THE DATE OF SUCH ALTERATION, AND A SPECIFIC DESCRIPTION OF THE ALTERATION.

DESIGN SUPERVISOR JOHN SEXTON JOB MANAGER JIM DUSSING DESIGNED BY RAY MATHURA CHECKED BY MIKE RYAN
DRAFTED BY KATHY BAKER CHECKED BY MIKE RYAN
ESTIMATED BY

FILE NAME = 3M0904_04_CPB_PIER2_PLAN.DGN
DATE/TIME = 20-MAY-2010 11:40
USER = rmathuramoyagam

NOTES:

1. PEDESTALS ARE NUMBERED AS SHOWN ON THE PLAN. SEE DRAWING ST-10 AND ST-11.
2. EXISTING ELEVATIONS AND DIMENSIONS ARE FROM CONTRACT F.I.S.H. 68-4 AND ARE FOR REFERENCE ONLY.
3. CONTRACTOR SHALL REMOVE ALL DEBRIS FROM THE TOP OF PEDESTALS PRIOR TO SETTING NEW BEARINGS. COST TO BE INCLUDED IN THE BID PRICE FOR VARIOUS ITEMS IN CONTRACT.
4. FOR ANCHOR STUD DETAILS SEE DWG. NO. ST-14
5. FOR ANCHOR BOLT LAYOUT DETAILS SEE DWG. NO. ST-08
6. FOR BAR LIST DETAILS SEE DWG. NO. ST-16 AND ST-17
7. FOR REINFORCEMENT DETAILS SEE DWG. NO. ST-08
8. THE CONTRACTOR SHALL FIELD VERIFY THE HEIGHT OF EXISTING BEARINGS AND COMPARE THEM WITH HEIGHT OF PROPOSED BEARINGS TO VERIFY THE NEW TOP OF PEDESTAL ELEVATIONS SHOWN ON THE CONTRACT PLANS. (SEE DWG. NO. ST-15)
9. THE CONTRACTOR SHALL PROVIDE ¾" DEEP SAW CUT BETWEEN THE CONCRETE TO BE REMOVED AND THE CONCRETE TO REMAIN. THE COST OF THE SAWCUT SHALL BE PAID FOR UNDER ITEM 580.01.
10. APPLY PROTECTIVE SEALING, ITEM 18559.1696 TO ALL EXPOSED SUBSTRUCTURE SURFACES.

STRUCTURAL LIFTING NOTES:

11. LIFTING SHALL BE CONFINED TO ONE END OF A SPAN AT ANY ONE TIME.
12. VEHICULAR TRAFFIC CAN BE MAINTAINED DURING BEAM JACKING OPERATIONS AS LONG AS THE CONTRACTOR ONLY JACKS A SINGLE GIRDER AT A TIME TO A MAXIMUM OF ⅛".
13. ANY DAMAGED BRIDGE PAINT RESULTING FROM STRUCTURAL LIFTING (I.E. WHERE CLAMPS ARE ATTACHED TO BOTTOM FLANGE) SHALL BE REPAIRED BY THE CONTRACTOR FOLLOWING THE REQUIREMENTS OF ITEM 574.01NNNN, COST TO BE INCLUDED IN THE BID PRICE FOR ITEM 585.01.
14. THE CONTRACTOR SHALL PROVIDE AND HAVE ON HAND AT THE PROJECT SITE, TEMPORARY SHORING/JACKING STANDBY SUPPORT SYSTEMS AVAILABLE FOR STRUCTURAL SUPPORT EMERGENCIES AS DIRECTED BY THE E.I.C.
15. THE CONTRACTOR SHALL HAVE THE GIRDERS/BEAMS STRUCTURALLY LIFTED PRIOR TO THE REMOVAL OF ANY CONCRETE ON PEDESTALS.
16. ONLY ONE STRUCTURAL LIFTING PAYMENT WILL BE MADE FOR EACH END OF GIRDER REGARDLESS OF THE NUMBER OF TIMES THE GIRDER IS LIFTED.

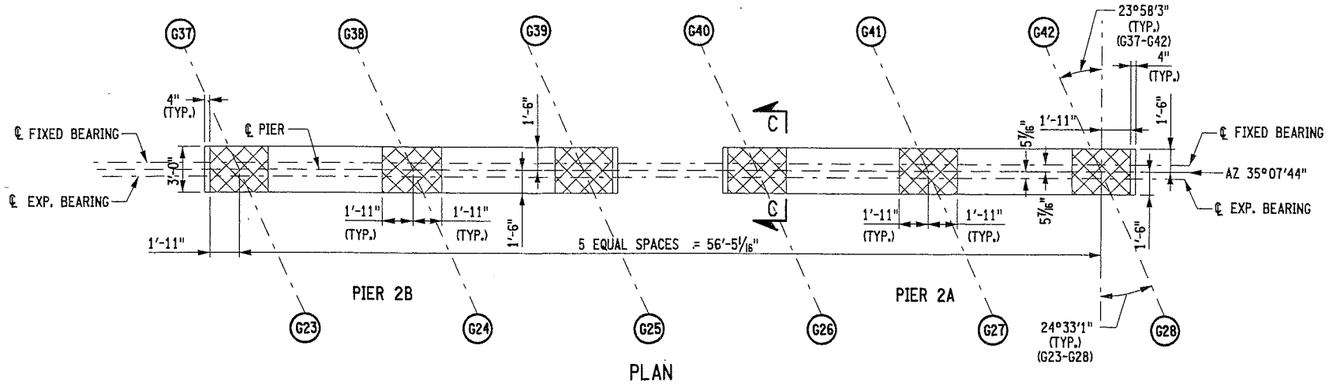

PLAN

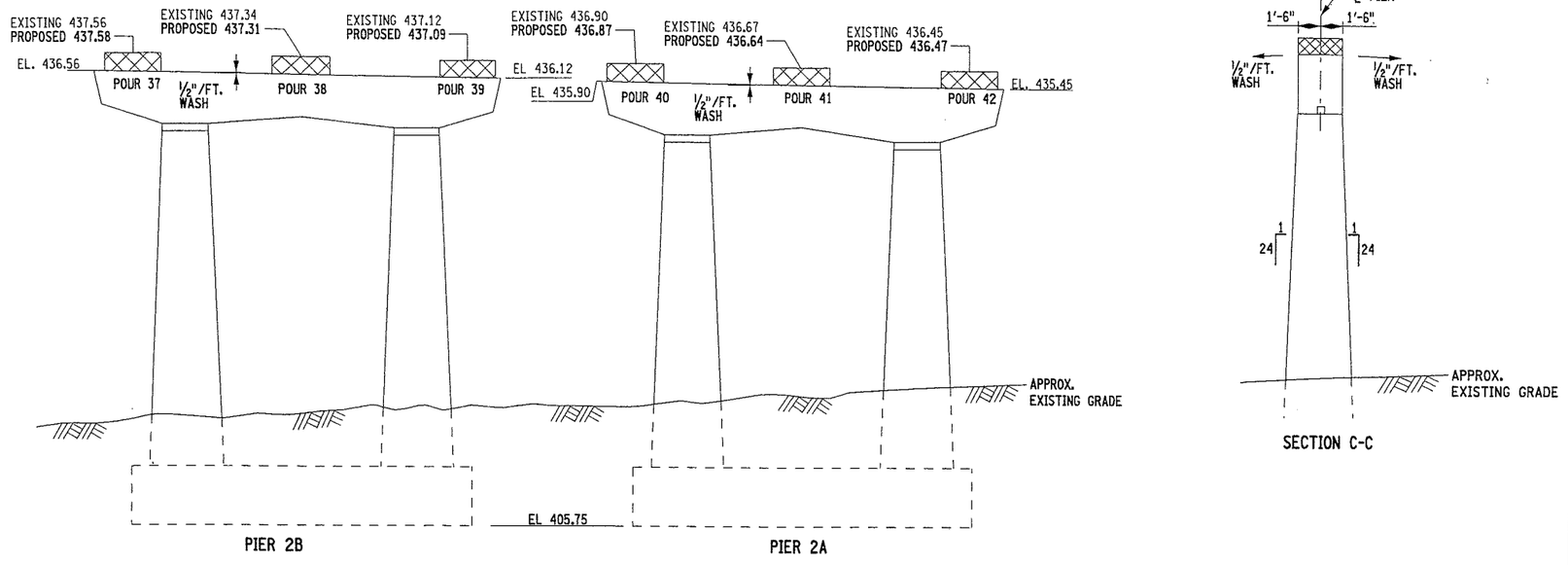

ELEVATION

SECTION C-C

CONCRETE TABLE (CY)		
PIER 2		
POUR	ITEM 580.01	ITEM 555.09
37	0.45	0.44
38	0.43	0.43
39	0.42	0.41
40	0.45	0.44
41	0.43	0.43
42	0.42	0.41

TABLE OF STRUCTURAL LIFTING - PIER 2 - ITEM 585.01

GIRDER 23			GIRDER 24			GIRDER 25			GIRDER 26			GIRDER 27			GIRDER 28		
D.L	LL+I	T.L.	D.L	LL+I	T.L.	D.L	LL+I	T.L.	D.L	LL+I	T.L.	D.L	LL+I	T.L.	D.L	LL+I	T.L.
32	39	71	39	78	117	39	78	117	39	78	117	39	78	117	32	39	71
GIRDER 37			GIRDER 38			GIRDER 39			GIRDER 40			GIRDER 41			GIRDER 42		
D.L	LL+I	T.L.	D.L	LL+I	T.L.	D.L	LL+I	T.L.	D.L	LL+I	T.L.	D.L	LL+I	T.L.	D.L	LL+I	T.L.
32	39	71	39	78	117	39	78	117	39	78	117	39	78	117	32	39	71

NOTE:
ALL JACKING LOADS ARE UNFACTORED, LOCATED AT CENTER BEARINGS AND ARE IN KIPS.

PROTECTIVE SEALER (SF)	
PIER 2	
ITEM 559.1696 18	1954.30

(G#) - GIRDER NUMBER

LEGEND:

▨ - ITEM 580.01 REMOVAL OF STRUCTURAL CONCRETE

CONTRACTOR SHALL REMOVE CONCRETE AROUND ALL EXISTING VERTICAL REINFORCING BARS TO REMAIN IN THE PEDESTAL.

PREPARED BY:	ON: 5/25/10	ALTERED BY:	ON:

STATE OF NEW YORK · JAMES MICHAEL DUSSING · LICENSED PROFESSIONAL ENGINEER · NO. 077475

AS BUILT REVISIONS
DESCRIPTION OF WORK:

SIGNATURE DATE

BRIDGE JOB ORDER CONTRACT - VARIOUS LOCATIONS	PIN 3M09.04	BRIDGES 1051082	CULVERTS	ALL DIMENSIONS IN ft UNLESS OTHERWISE NOTED	CONTRACT NUMBER
I-690 WESTBOUND OVER CSXT AND PEAT STREET	PS&E DATE			PIER 2A AND 2B PLAN AND ELEVATION	
CITY OF SYRACUSE					DRAWING NO. ST-04
COUNTY: ONONDAGA					SHEET NO. 4

DOCUMENT NAME: 3M0904_04_CPB_PIER2_PLAN.DGN

NEW YORK STATE DEPARTMENT OF TRANSPORTATION REGION 03

IT IS A VIOLATION OF LAW FOR ANY PERSON, UNLESS THEY ARE ACTING UNDER THE DIRECTION OF A LICENSED PROFESSIONAL ENGINEER, LANDSCAPE ARCHITECT, OR LAND SURVEYOR TO ALTER AN ITEM IN ANY WAY. IF AN ITEM BEARING THE STAMP OF A LICENSED PROFESSIONAL IS ALTERED, THE ALTERING ENGINEER, ARCHITECT, LANDSCAPE ARCHITECT, OR LAND SURVEYOR SHALL STAMP THE DOCUMENT AND INCLUDE THE NOTATION "ALTERED BY" FOLLOWED BY THEIR SIGNATURE, THE DATE OF SUCH ALTERATION, AND A SPECIFIC DESCRIPTION OF THE ALTERATION.

DESIGN SUPERVISOR JOHN SEXTON JOB MANAGER JIM DUSSING DESIGNED BY RAY MATHURA CHECKED BY MIKE RYAN
DRAFTED BY KATHY BAKER CHECKED BY MIKE RYAN ESTIMATED BY

FILE NAME = 3M0904_05_CPB_ABUT_END.DGN
DATE/TIME = 25-MAY-2010 10:22
USER = mjryan

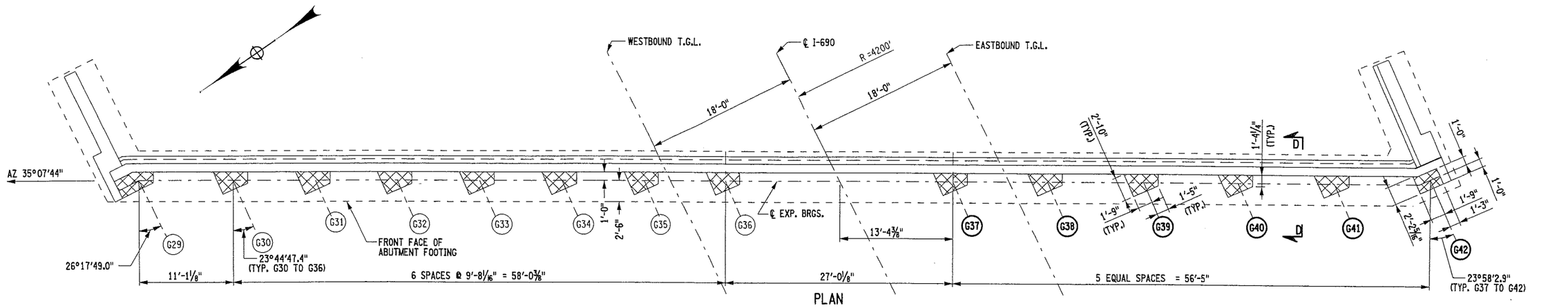

PLAN

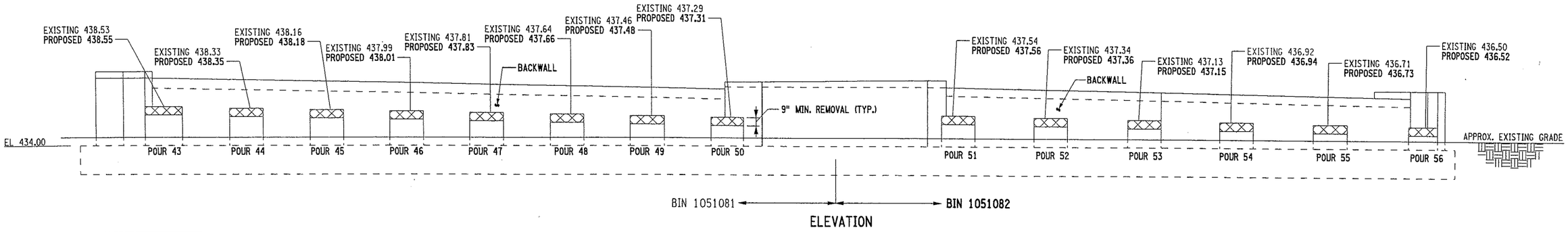

ELEVATION

CONCRETE TABLE (CY)		
END ABUTMENT		
POUR	ITEM 580.01	ITEM 555.09
51	0.27	0.27
52	0.27	0.27
53	0.27	0.27
54	0.27	0.27
55	0.27	0.27
56	0.27	0.27

PROTECTIVE SEALER (SF)	
END ABUTMENT	
ITEM 559.1696 18	486.00

TABLE OF STRUCTURAL LIFTING -END ABUTMENT-ITEM 585.01																	
GIRDER 37			GIRDER 38			GIRDER 39			GIRDER 40			GIRDER 41			GIRDER 42		
D.L	LL+I	T.L.	D.L	LL+I	T.L.	D.L	LL+I	T.L.	D.L	LL+I	T.L.	D.L	LL+I	T.L.	D.L	LL+I	T.L.
32	39	71	39	78	117	39	78	117	39	78	117	39	78	117	32	39	71

NOTE:
ALL JACKING LOADS ARE UNFACTORED, LOCATED AT CENTER BEARINGS AND ARE IN KIPS.

NOTES:

1. PEDESTALS ARE NUMBERED AS SHOWN ON THE PLAN. SEE DWG. NO. ST-10 AND ST-11
2. EXISTING ELEVATIONS AND DIMENSIONS ARE FROM CONTRACT F.I.S.H. 68-4 AND ARE FOR REFERENCE ONLY.
3. CONTRACTOR SHALL REMOVE ALL DEBRIS FROM THE TOP OF PEDESTALS PRIOR TO SETTING NEW BEARINGS. COST TO BE INCLUDED IN THE BID PRICE FOR VARIOUS ITEMS IN CONTRACT.
4. FOR ANCHOR STUD DETAILS SEE DWG. NO. ST-14
5. FOR ANCHOR BOLT LAYOUT DETAILS SEE DWG. NO. ST-09
6. FOR BAR LIST DETAILS SEE DWG. NO. ST-16 AND ST-17
7. FOR REINFORCEMENT DETAILS SEE DWG. NO. ST-09
8. THE CONTRACTOR SHALL FIELD VERIFY THE HEIGHT OF EXISTING BEARINGS AND COMPARE THEM WITH HEIGHT OF PROPOSED BEARINGS TO VERIFY THE NEW TOP OF PEDESTAL ELEVATIONS SHOWN ON THE CONTRACT PLANS. (SEE DWG. NO. ST-15 FOR PEDESTAL HEIGHT TABLE)
9. THE CONTRACTOR SHALL PROVIDE ¾" DEEP SAW CUT BETWEEN THE CONCRETE TO BE REMOVED AND THE CONCRETE TO REMAIN. THE COST OF THE SAWCUT SHALL BE PAID FOR UNDER ITEM 580.01.
10. APPLY PROTECTIVE SEALING, ITEM 18559.1696 TO ALL EXPOSED SUBSTRUCTURE SURFACES.

STRUCTURAL LIFTING NOTES:

11. LIFTING SHALL BE CONFINED TO ONE END OF A SPAN AT ANY ONE TIME.
12. VEHICULAR TRAFFIC CAN BE MAINTAINED DURING BEAM JACKING OPERATIONS AS LONG AS THE CONTRACTOR ONLY JACKS A SINGLE GIRDER AT A TIME TO A MAXIMUM OF 1/8".
13. ANY DAMAGED BRIDGE PAINT RESULTING FROM STRUCTURAL LIFTING (I.E.-WHERE CLAMPS ARE ATTACHED TO BOTTOM FLANGE) SHALL BE REPAIRED BY THE CONTRACTOR FOLLOWING THE REQUIREMENTS OF ITEM 574.01NNNN, COST TO BE INCLUDED IN THE BID PRICE FOR ITEM 585.01.
14. THE CONTRACTOR SHALL PROVIDE AND HAVE ON HAND AT THE PROJECT SITE, TEMPORARY SHORING/JACKING STANDBY SUPPORT SYSTEMS AVAILABLE FOR STRUCTURAL SUPPORT EMERGENCIES AS DIRECTED BY THE E.I.C.
15. THE CONTRACTOR SHALL HAVE THE GIRDERS/BEAMS STRUCTURALLY LIFTED PRIOR TO THE REMOVAL OF ANY CONCRETE ON PEDESTALS.
16. ONLY ONE STRUCTURAL LIFTING PAYMENT WILL BE MADE FOR EACH END OF GIRDER REGARDLESS OF THE NUMBER OF TIMES THE GIRDER IS LIFTED.

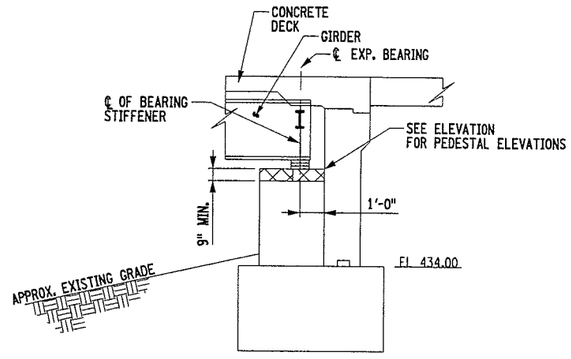

SECTION D-D

LEGEND:

▨ - ITEM 580.01 REMOVAL OF STRUCTURAL CONCRETE

CONTRACTOR SHALL REMOVE CONCRETE AROUND ALL EXISTING VERTICAL REINFORCING BARS TO REMAIN IN THE PEDESTAL.

PREPARED BY: 5/25/10
ON:

ALTERED BY:
ON:

STATE OF NEW YORK · JAMES MICHAEL DUSSING · LICENSED PROFESSIONAL ENGINEER · NO. 077475

AS BUILT REVISIONS
DESCRIPTION OF WORK:

SIGNATURE DATE

DOCUMENT NAME: 3M0904_05_CPB_ABUT_END.DGN

BRIDGE JOB ORDER CONTRACT - VARIOUS LOCATIONS
I-690 WESTBOUND OVER CSXT AND PEAT STREET
CITY OF SYRACUSE
COUNTY: ONONDAGA

PIN 3M09.04
PS&E DATE

BRIDGES 1051082

CULVERTS

ALL DIMENSIONS IN ft UNLESS OTHERWISE NOTED

END ABUTMENT
PLAN AND ELEVATION

CONTRACT NUMBER

DRAWING NO. ST-05
SHEET NO. 5

NEW YORK STATE DEPARTMENT OF TRANSPORTATION REGION 03

BIN: 1051082
I690 EB / CSX TRANS/PEAT ST.

PIER 1 (B) DETERIORATION SKETCH

NOT TO SCALE

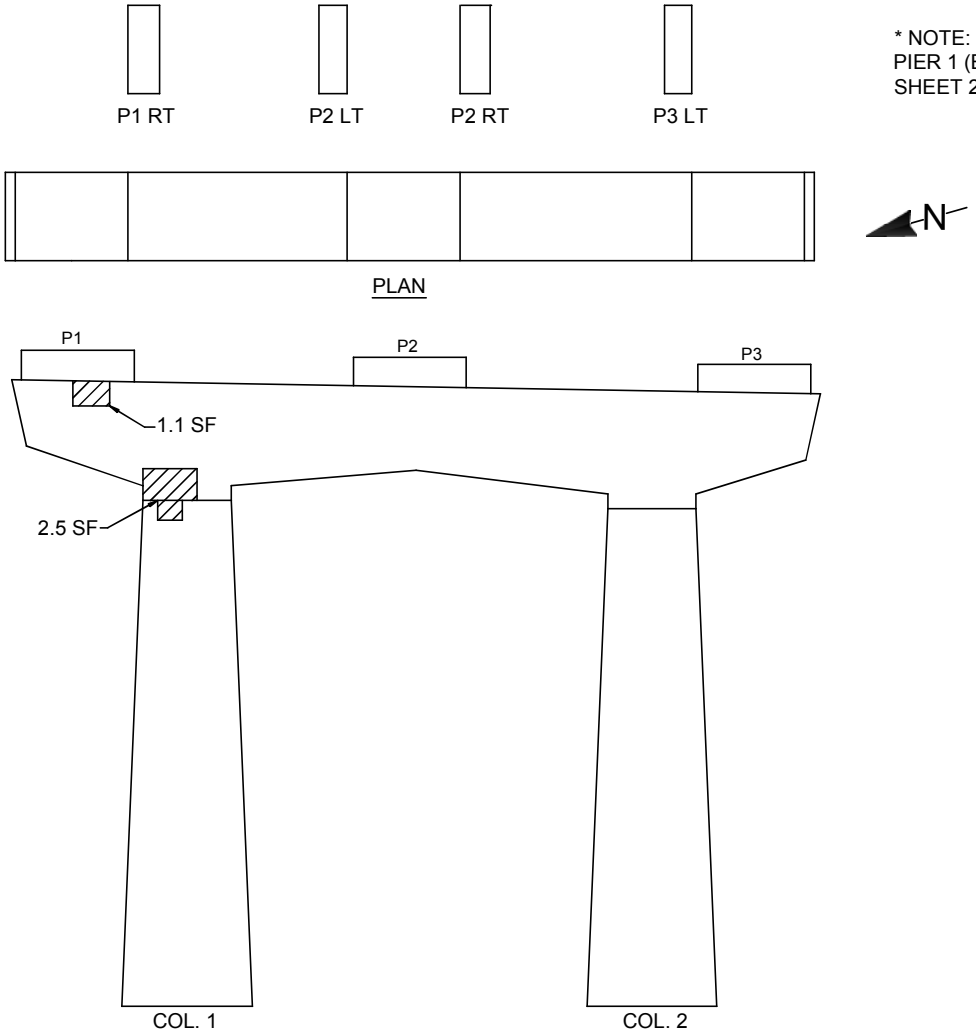

* NOTE: P1 LT & P3 RT VIEWS LOCATED ON PIER 1 (B) DETERIORATION SKETCH SHEET 2 OF 2

LEGEND

- Hollow Concrete
- Spall
- Crack
- Hairline Crack

BIN: 1051082
I690 EB / CSX TRANS/PEAT ST.

PIER 1 (B) DETERIORATION SKETCH

NOT TO SCALE

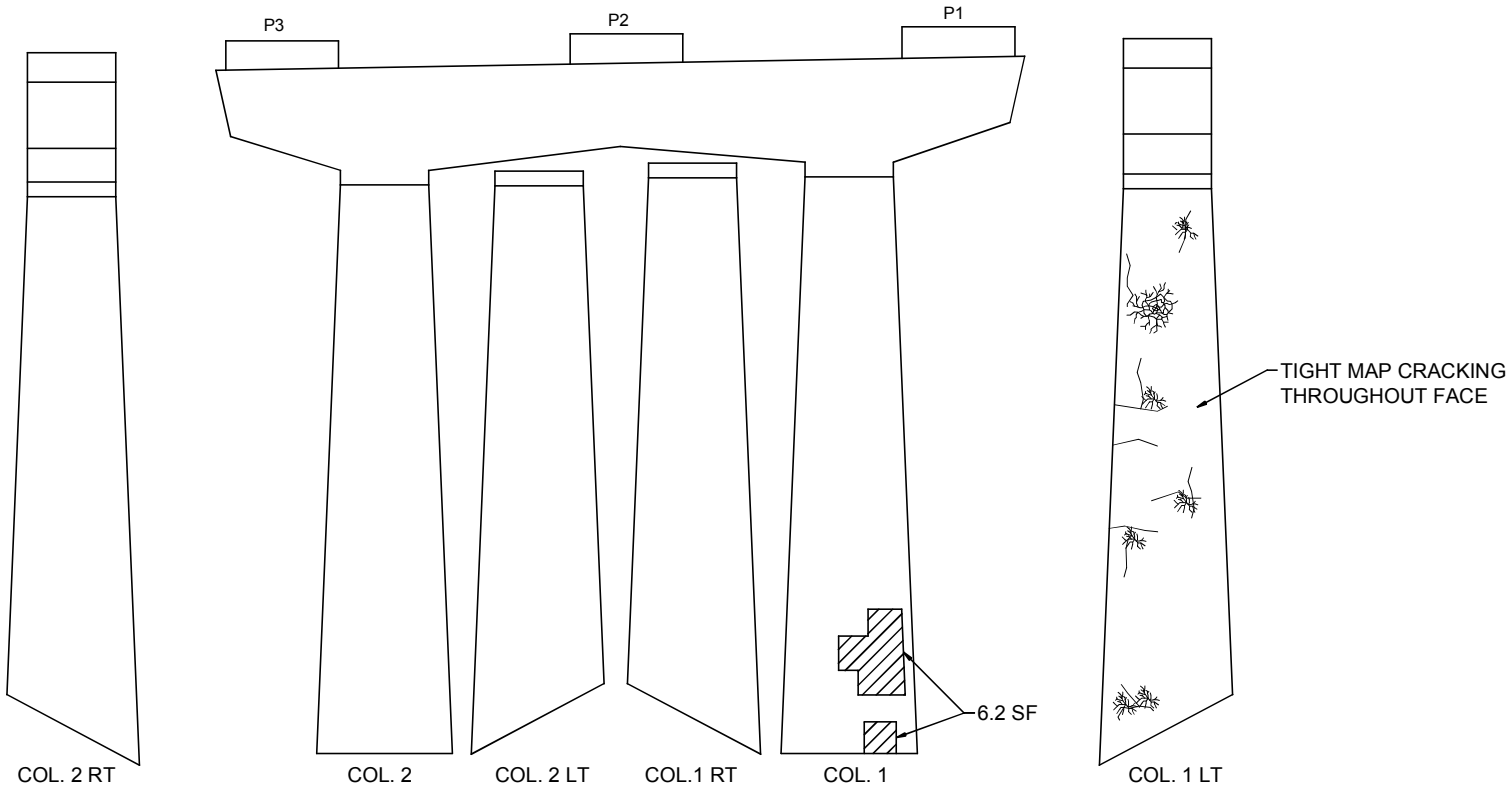

PIER 1 END LEFT ELEVATION

LEGEND
Hollow Concrete
Spall
Crack
Hairline Crack

BIN: 1051082
I690 EB / CSX TRANS/PEAT ST.

PIER 1 (A) DETERIORATION SKETCH

NOT TO SCALE

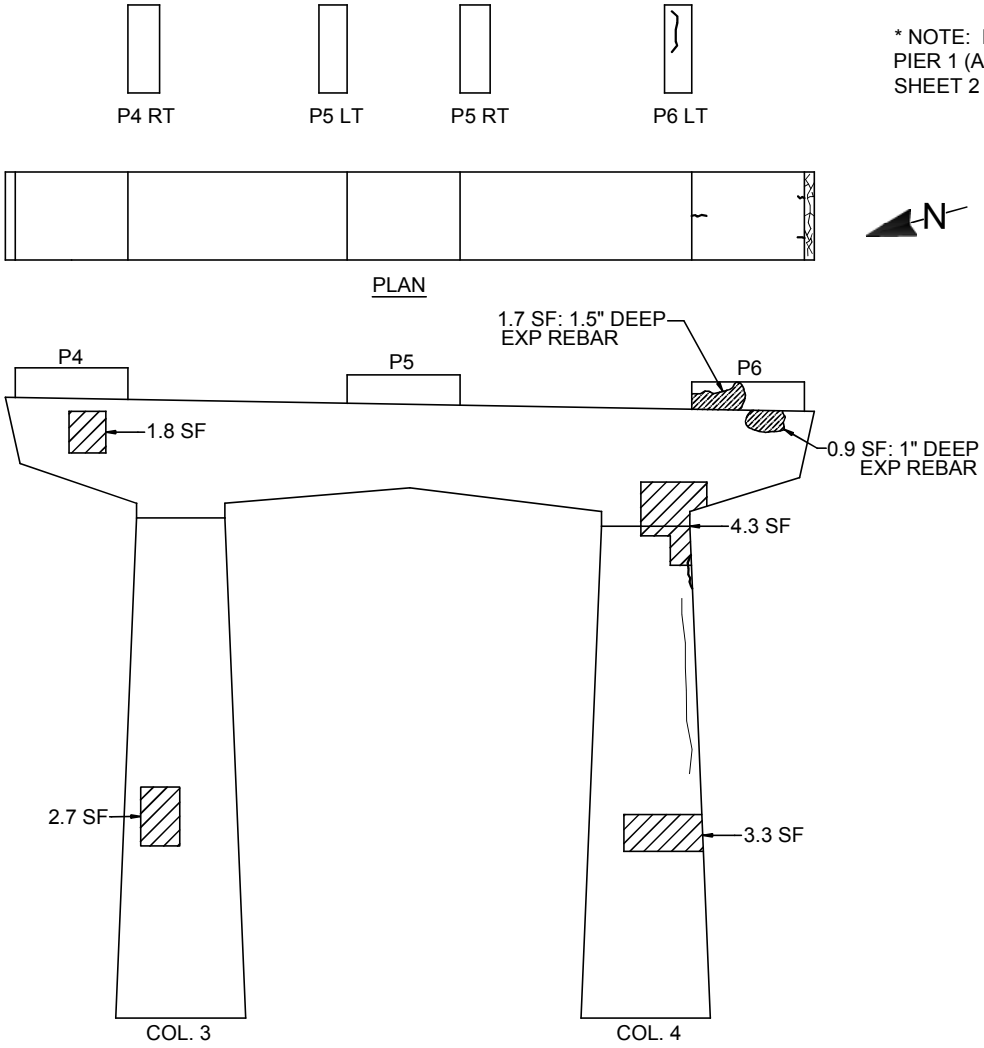

* NOTE: P4 LT & P6 RT VIEWS LOCATED ON PIER 1 (A) DETERIORATION SKETCH SHEET 2 OF 2

LEGEND

- Hollow Concrete
- Spall
- Crack
- Hairline Crack

BIN: 1051082
I690 EB / CSX TRANS/PEAT ST.

PIER 1 (A) DETERIORATION SKETCH

NOT TO SCALE

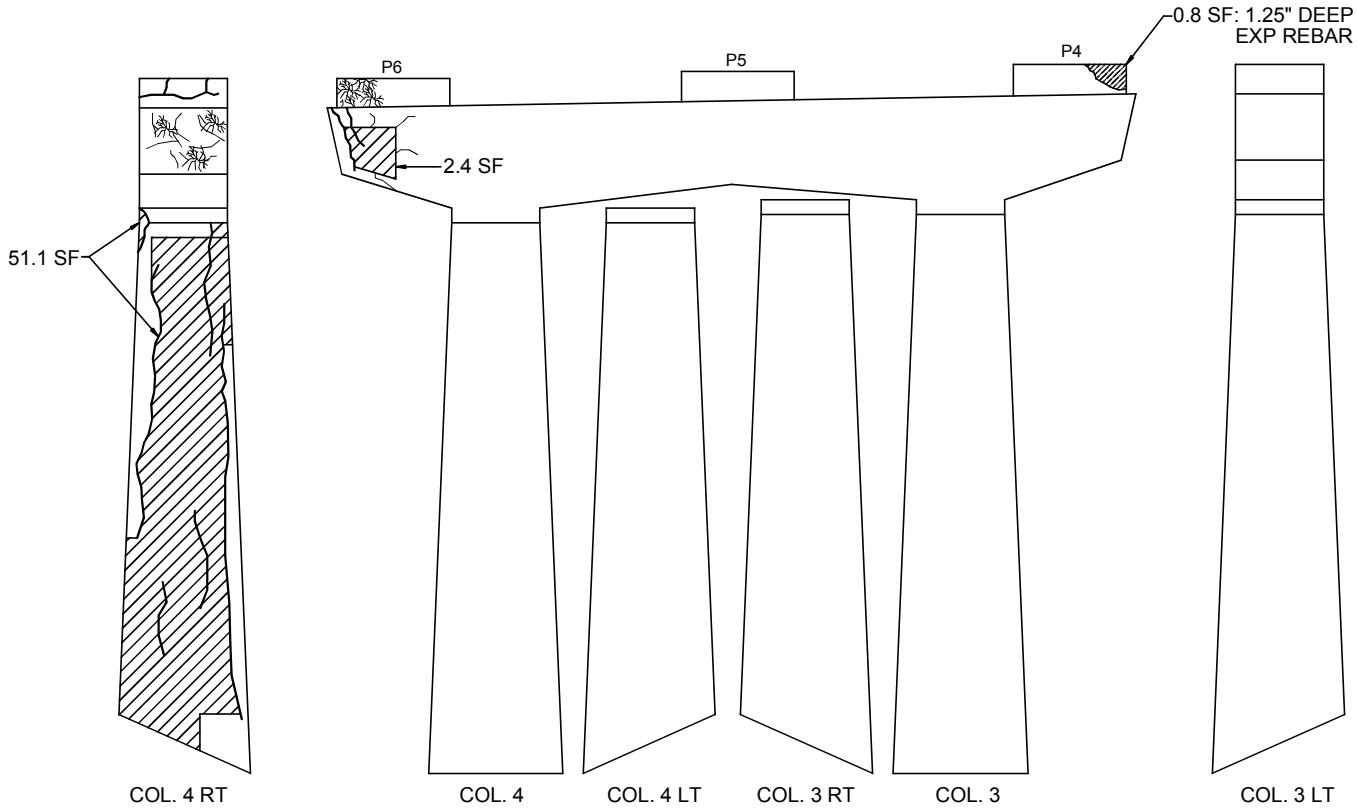

PIER 1 END RIGHT ELEVATION

LEGEND
Hollow Concrete
Spall
Crack
Hairline Crack

BIN: 1051082
I690 EB / CSX TRANS/PEAT ST.

PIER 2 (B) DETERIORATION SKETCH

NOT TO SCALE

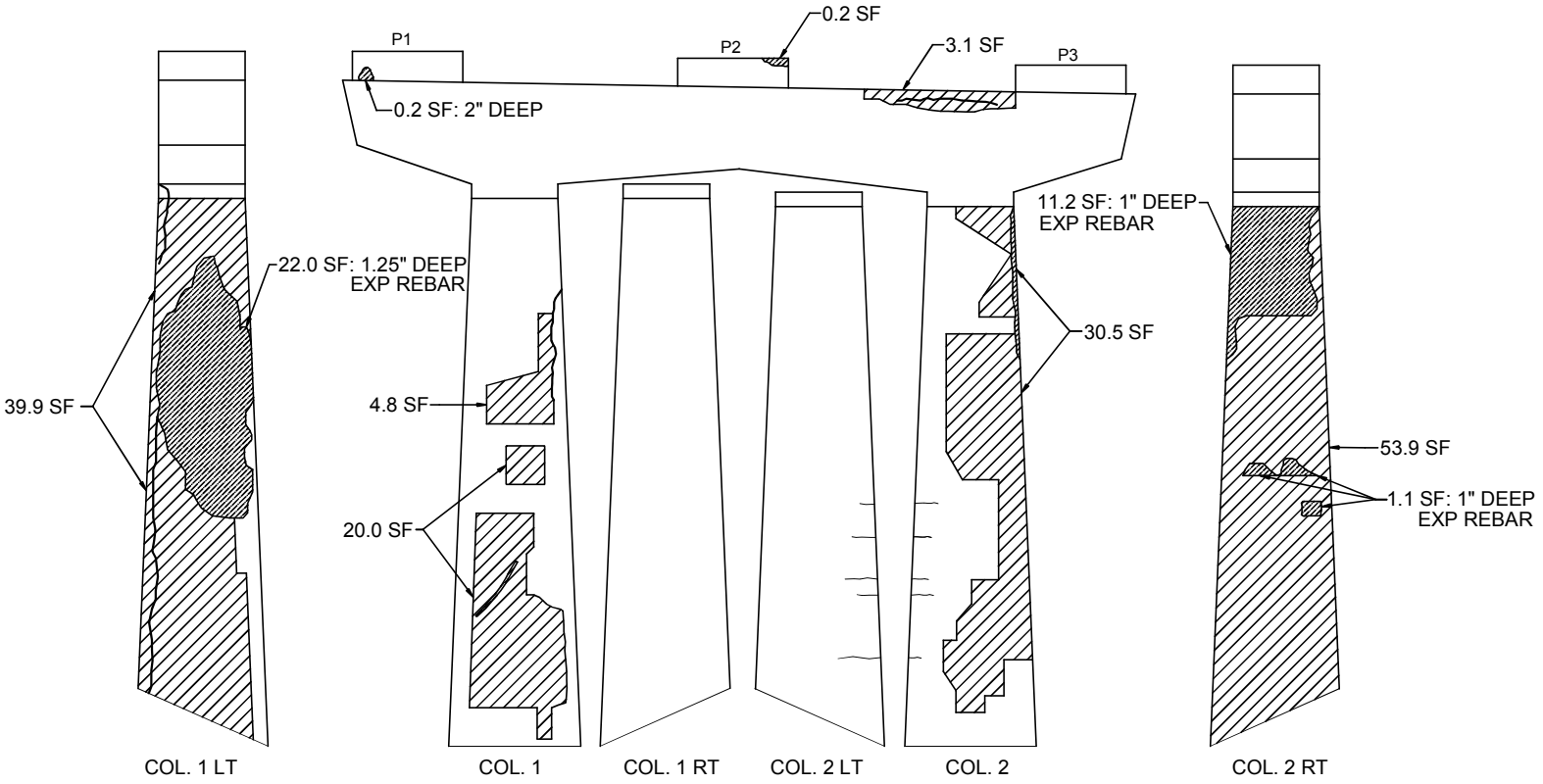

PIER 2 BEGIN LEFT ELEVATION

LEGEND
Hollow Concrete
Spall
Crack
Hairline Crack

BIN: 1051082
I690 EB / CSX TRANS/PEAT ST.

PIER 2 (B) DETERIORATION SKETCH

NOT TO SCALE

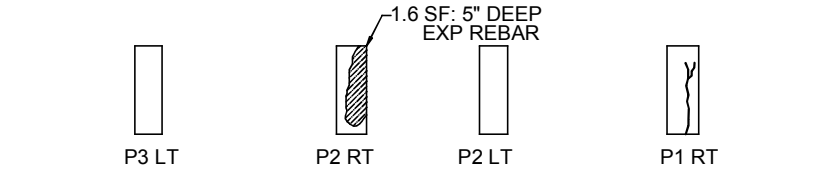

* NOTE: P1 LT & P3 RT VIEWS LOCATED ON PIER 2 (B) DETERIORATION SKETCH SHEET 1 OF 2

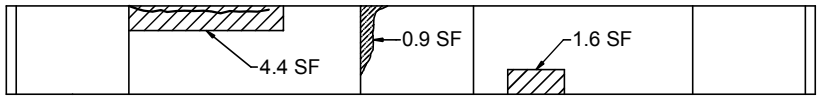

PLAN

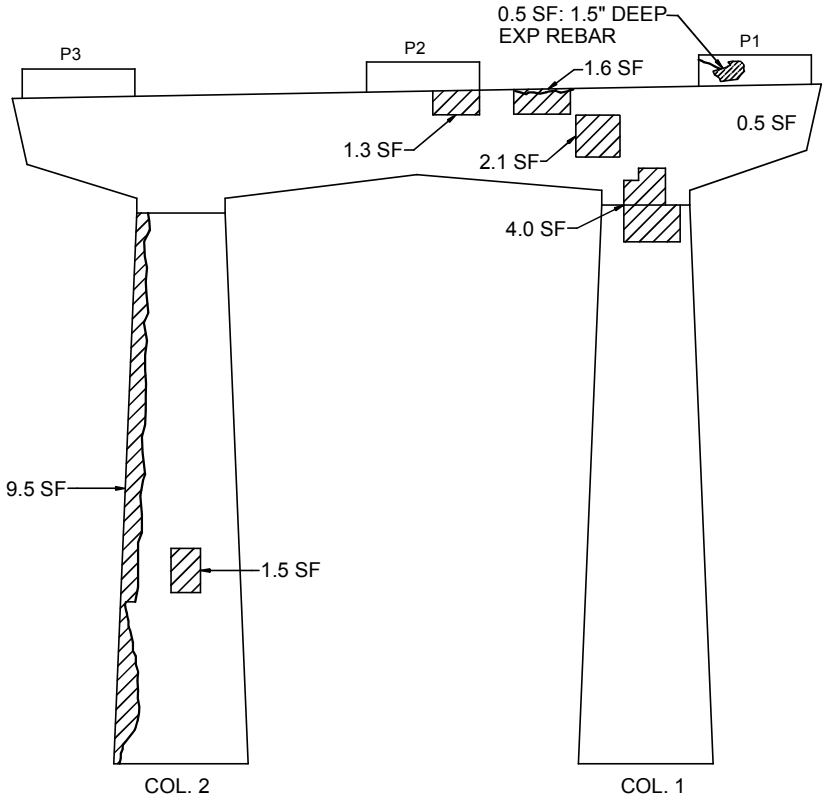

PIER 2 END LEFT ELEVATION



UNDERSIDE OF CAPBEAM

LEGEND

- Hollow Concrete
- Spall
- Crack
- Hairline Crack

BIN: 1051082
I690 EB / CSX TRANS/PEAT ST.

PIER 2 (A) DETERIORATION SKETCH

NOT TO SCALE

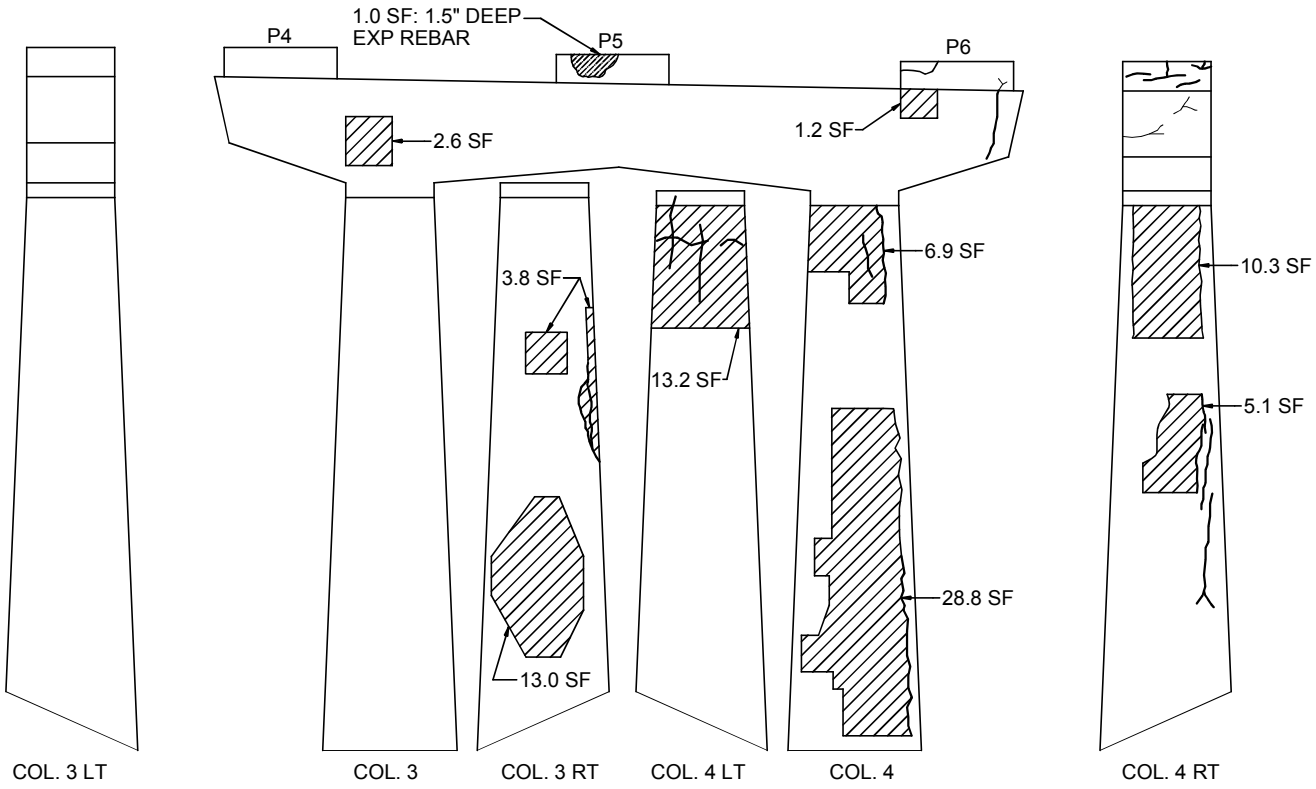

PIER 2 BEGIN RIGHT ELEVATION

LEGEND
Hollow Concrete
Spall
Crack
Hairline Crack

BIN: 1051082
I690 EB / CSX TRANS/PEAT ST.

PIER 2 (A) DETERIORATION SKETCH

NOT TO SCALE

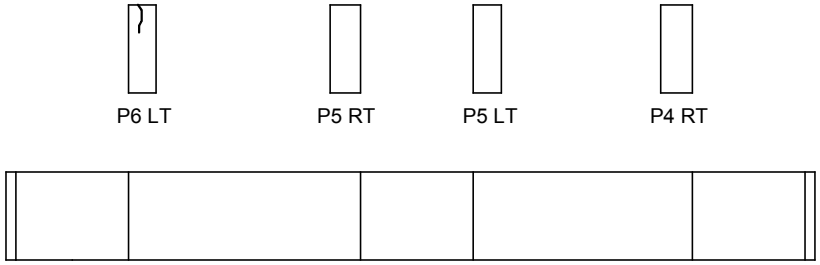

PLAN

* NOTE: P4 LT & P6 RT VIEWS LOCATED ON PIER 2 (A) DETERIORATION SKETCH SHEET 1 OF 2

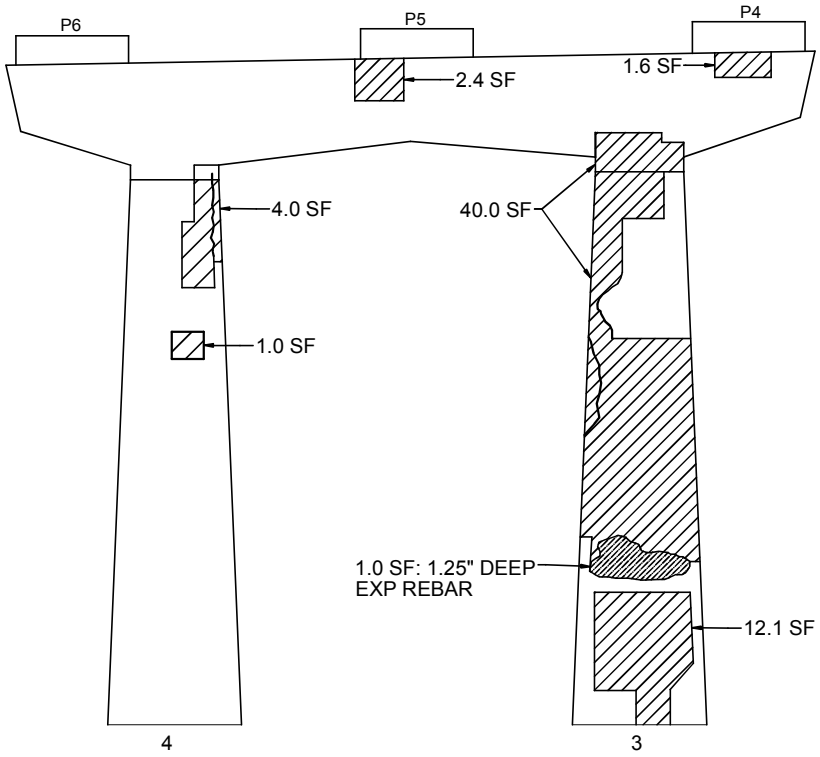

PIER 2 END RIGHT ELEVATION



UNDERSIDE OF CAPBEAM

LEGEND

- Hollow Concrete
- Spall
- Crack
- Hairline Crack

BIN: 1051082
I-690 EB / CSX TRANS/PEAT ST.

DECK DETERIORATION PLAN

NOT TO SCALE

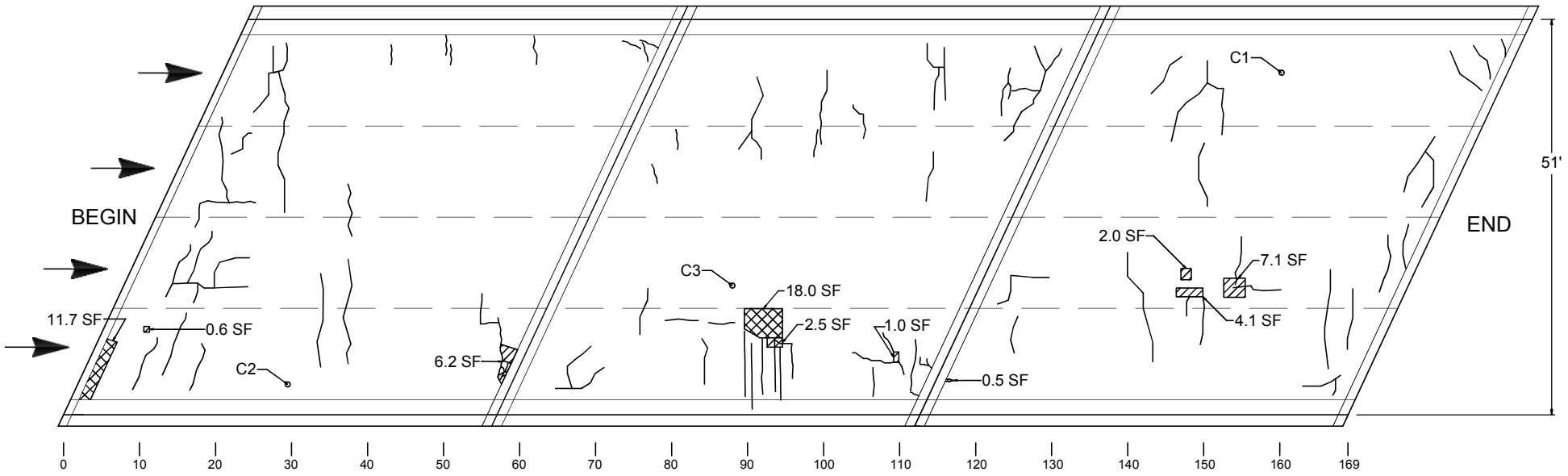

TOTAL DAMAGED AREA EQUALS 53.7 SF WHICH IS 0.6 % OF DECK SURFACE

LEGEND

- Hollow Concrete
- Patch
- Spall
- Coring location
- Crack

IN-DEPTH PHOTO DOCUMENTATION

BIN: 1051082
I-690 EB / CSX TRANS/PEAT ST.

IN-DEPTH INSPECTION
PHOTO LOCATION PLAN

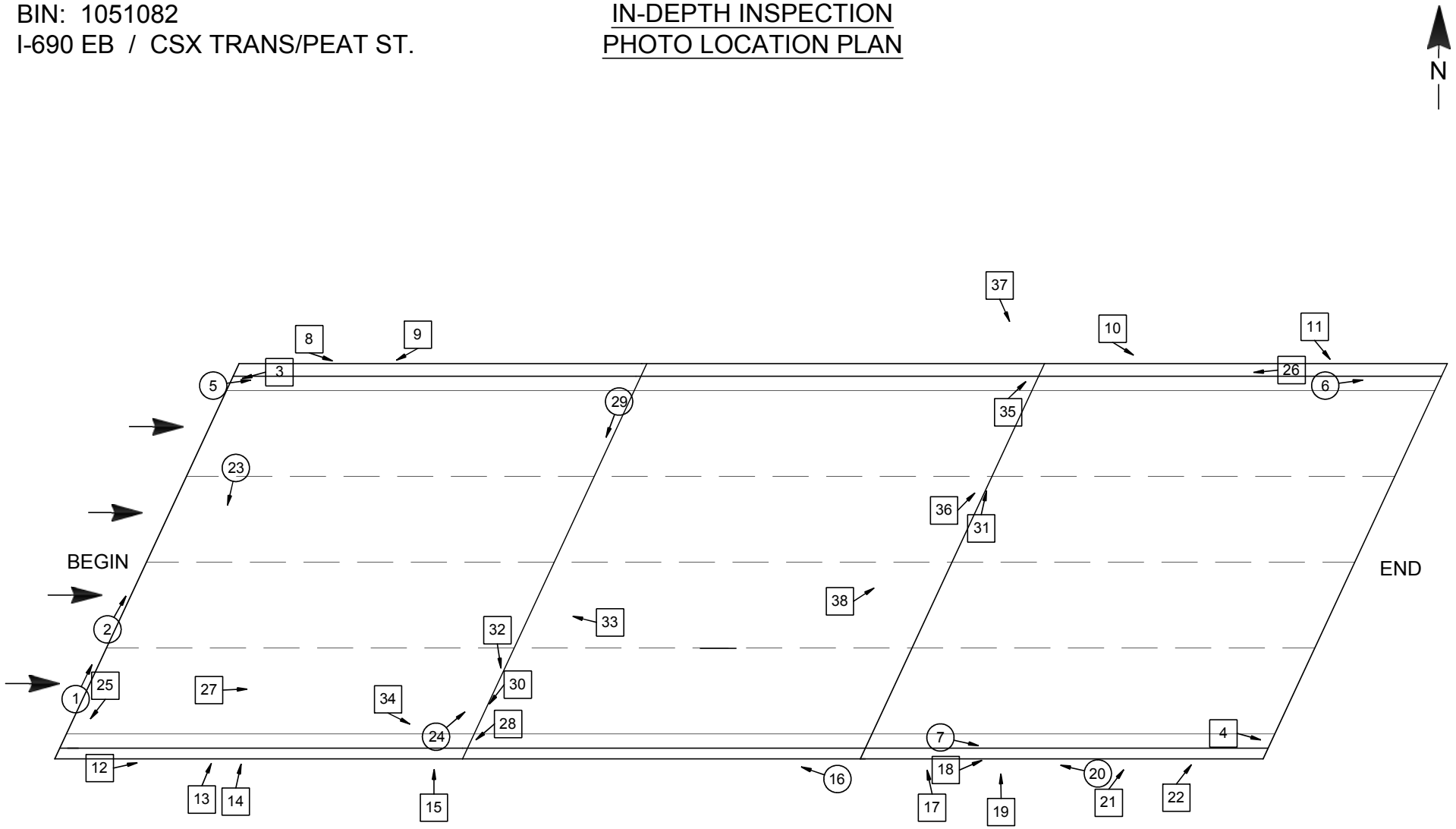

In-Depth Inspection Photos

I-690 EB over CSX TRANS/PEAT ST.
BIN 1051082



DESCRIPTION: BEGIN JOINT & DECK AT BEGIN RIGHT (R-L)

PHOTO 1



DESCRIPTION: BEGIN JOINT LANE 3 (R-L)

PHOTO 2



DESCRIPTION: BEGIN ABUTMENT BEARING 1

PHOTO 3



DESCRIPTION: END BEARING & PEDESTAL 6

PHOTO 4



DESCRIPTION: LEFT SAFETY WALK SPAN 1 – 5’ FROM BEGIN

PHOTO 5



DESCRIPTION: LEFT SAFETY WALK SPAN 3 – 10’ FROM END

PHOTO 6



DESCRIPTION: RIGHT SAFETY WALK SPAN 3 – 40' FROM END (B-E)

PHOTO 7



DESCRIPTION: LEFT FASCIA SPAN 1 – 14' FROM BEGIN (B-E)

PHOTO 8



DESCRIPTION: SPAN 1 LEFT FASCIA 21’ FROM BEGIN (E-B)

PHOTO 9



DESCRIPTION: SPAN 3 LEFT FASCIA 15’ FROM BEGIN

PHOTO 10



DESCRIPTION: SPAN 3 LEFT FASCIA 15' FROM END

PHOTO 11



DESCRIPTION: SPAN 1 RIGHT FASCIA 12' FROM BEGIN (B-E)

PHOTO 12



DESCRIPTION: SPAN 1 RIGHT FASCIA 23' FROM BEGIN

PHOTO 13



DESCRIPTION: SPAN 1 RIGHT FASCIA 26' FROM BEGIN

PHOTO 14



DESCRIPTION: SPAN 1 RIGHT FASCIA 4’ FROM END

PHOTO 15



DESCRIPTION: SPAN 2 RIGHT FASCIA 10’ FROM END

PHOTO 16



DESCRIPTION: SPAN 3 RIGHT FASCIA 9’ FROM BEGIN

PHOTO 17



DESCRIPTION: SPAN 3 RIGHT FASCIA 14’ FROM BEGIN

PHOTO 18



DESCRIPTION: SPAN 3 RIGHT FASCIA 20' FROM BEGIN

PHOTO 19



DESCRIPTION: SPAN 3 RIGHT FASCIA 27' FROM BEGIN

PHOTO 20



DESCRIPTION: SPAN 3 RIGHT FASCIA 18' FROM END

PHOTO 21



DESCRIPTION: SPAN 3 RIGHT FASCIA 9' FROM END

PHOTO 22



DESCRIPTION: SPAN 1 BEGIN LANE 2 (L-R)

PHOTO 23



DESCRIPTION: SPAN 1 DECK & JOINT RIGHT LANE (R-L)

PHOTO 24



DESCRIPTION: BEGIN BACKWALL AT RIGHT FROM BAY 5 (L-R)

PHOTO 25



DESCRIPTION: LEFT FASCIA GIRDER – SPAN 3 (E-B)

PHOTO 26



DESCRIPTION: PIER 1 BEGIN

PHOTO 27



DESCRIPTION: PIER 1 BEARING 6 LEFT

PHOTO 28



DESCRIPTION: SPAN 1 JOINT (L-R)

PHOTO 29



DESCRIPTION: PIER 1 JOINT AT BAY 5 (L-R)

PHOTO 30



DESCRIPTION: PIER 2 JOINT AT BAY 2 (R-L)

PHOTO 31



DESCRIPTION: PIER 1 BEARING 5 LEFT

PHOTO 32



DESCRIPTION: PIER 1 PEDESTAL 4 END

PHOTO 33



DESCRIPTION: PIER 1 PEDESTAL 6 & CAP BEAM BEGIN RIGHT

PHOTO 34



DESCRIPTION: PIER 2 BEARING 1 RIGHT

PHOTO 35



DESCRIPTION: PIER 2 CAP BEAM & PEDESTAL 2 (R-L)

PHOTO 36



DESCRIPTION: PIER 2 COLUMN 1 LEFT

PHOTO 37



DESCRIPTION: PIER 2 COLUMN 2 RIGHT

PHOTO 38

ASBESTOS SAMPLING SURVEY

NOT AVAILABLE FOR THIS BRIDGE

LATEST BIENNIAL INSPECTION REPORT

Inspection Date: 6/20/2013 RC: 33 BIN: 1051082

Bridge Ratings

Carried: 690I 690I33012057 Crossed: CSX TRANS/PEAT ST CheckValue: 1,828,713,853

Inspection Agency: 13 - Consultant Type of Inspection: 1 - BIENNIAL
GTMS: 302 -- Steel - Stringer/Multi-Beam or Girder
POSTINGS: See Gen Rec Page 1 for Postings at time of inspection.
Further Investigation Needed: No
State Highway Number: 68 04 Milepoint: 5.83 AADT/Yr: 41378 / 2002
Orientation: 3 - East Political Unit: 2055 - City of SYRACUSE Year Built: 1971
Total Spans: 3 Ramp Bridge Attached To Span: NA BIN: NA
General Recommendation: 5 Computed Condition Rating: 4.688

Abutment Ratings:	**Beg Abut**	**End Abut**
Joint with Deck	4	5
Bearings, Bolts, Pads	4	4
Seats and Pedestals	5	5
Backwall	5	5
Stem (Breastwall)	8	8
Erosion or Scour	6	6
Footings	9	9
Piles	9	9
Recommendation	5	5

Wingwall Ratings:	**Beg Abut**	**End Abut**
Walls	5	5
Footings	9	9
Erosion or Scour	6	6
Piles	9	9

Channel Ratings:	**Channel**
Stream Alignment	8
Erosion and Scour	8
Waterway Opening	8
Bank Protection	8

Approach Ratings:	**Approaches**
Drainage	5
Embankment	5
Settlement	5
Erosion	6
Pavement	6
Guide Railing	6

Number of Flags Issued:

RED: 0 Yellow: 0 Safety: 0

Vulnerability Reviews Recommended: 1=Yes, 2=No, 3=NA, X=NotActive

Hydraulic: 3	Overload: X	Steel: 2
Collision: 2	Concrete: X	Seismic: X

Inspector's Signature: CheckValue: 1,828,713,853 Date: 6/20/2013

James W. Gorzynski,PE () (Inspector ID:3100044)

Signed copy of this inspection report is available in the appropriate NYSDOT Regional Office

Reviewed By: Date: 8/20/2013

Stephen L. Gauthier,PE () (QC ID:3100077)

Signed copy of this inspection report is available in the appropriate NYSDOT Regional Office

Inspection Date: 6/20/2013 RC: 33 BIN: 1051082

Span Ratings

Carried: 690I 690I33012057 Crossed: CSX TRANS/PEAT ST CheckValue: 1,828,713,853

Deck Element Ratings:	001	002	003
Wearing Surface	4	4	4
Curbs	5	5	5
Sidewalks, Fascias	5	4	4
Railings, Parapets	5	5	5
Scuppers	5	8	5
Gratings	8	8	8
Median	8	8	8
Mono Deck Surface	5	5	5

Superstructure Ratings:	001	002	003
Structural Deck	5	5	5
Primary Members	6	6	6
Secondary Members	5	5	5
Paint	4	4	4
Joints	4	4	8
Recommendation	5	5	5

Pier Ratings:	001	002	003
Bearings, Bolts, Pads	4	4	8
Pedestals	4	4	8
Top of Cap or Beam	6	6	8
Stem Solid Pier	8	8	8
Cap Beam	6	5	8
Pier Columns	4	4	8
Footings	9	9	8
Erosion or Scour	6	6	8
Piles	9	9	8
Recommendation	5	5	8

Utility Ratings:	001	002	003
Lighting	8	8	8
Sign Structure	5	8	8
Utilities and Support	8	8	8

Field Notes:

Field Date	Arrival	Departure	Temp (C)	Temp (F)	Weather Conditions
4/1/2013	12:45:00 PM	1:45:00 PM	4	40	Cloudy, Windy
4/23/2013	3:35:00 PM	4:45:00 PM	18	65	Fair
6/20/2013	7:15:00 PM	7:40:00 PM	24	75	Fair

Inspection Date: 6/20/2013 RC: 33 BIN: 1051082

Inspection Notes

Carried: 690I 690I33012057 Crossed: CSX TRANS/PEAT ST CheckValue: 1,828,713,853

Note ID: 3A1310510820001

Beg Abut -- Abutment: Joint with Deck -- Rated 4, Was 5
Referenced Photos: "1", "2"
2013 - The begin abutment joint with deck allows minor to moderate leakage, especially in Bay 5 (Photo 1). The underside of the joint header is also spalled in this area (Photos 1 & 2). The top of the joint is intact with a slightly worn seal.

Note ID: 3A1310510820000

Beg Abut -- Abutment: Bearings, Bolts, Pads -- Rated 4, Was 4
End Abut -- Abutment: Bearings, Bolts, Pads -- Rated 4, Was 4
Referenced Photos: "3", "4"
2013 - The bearings supporting Girders G1 & G6 at both abutments (fascia bearings) have rust and corrosion with the slider plates warped upwards from pack rust (Photos 3 & 4). This inhibits proper function of the bearings. Interior bearings on both abutments are in better condition and would rate '5' alone.

Note ID: 3A1310510820002

Approaches: Guide Railing -- Rated 6, Was 2
Referenced Photos: "5"
2013 - The previously reported damaged approach guide railing at the end right has been repaired. The previously issued Safety Flag for this condition has been removed. Approach guide railing at all quadrants is in very good condition.

Note ID: 3A1310510820003

Span 001 -- Deck Elements: Wearing Surface -- Rated 4, Was 4
Span 002 -- Deck Elements: Wearing Surface -- Rated 4, Was 4
Span 003 -- Deck Elements: Wearing Surface -- Rated 4, Was 4
Referenced Photos: "6", "13"
2013 - The deck wearing surface in all spans has worn to a smooth surface with exposed aggregate, especially along the wheel paths (Photo 6). Tight transverse cracks were also observed in isolated areas.

There are isolated areas of shallow scaling on the deck wearing surface in all spans. These areas range from under 2 square feet up to approximately 4 square feet (Photo 13). Some of these areas may have been patched.

Note ID: 3A1310510820007

Span 001 -- Superstructure: Paint -- Rated 4, Was 5
Span 002 -- Superstructure: Paint -- Rated 4, Was 5
Span 003 -- Superstructure: Paint -- Rated 4, Was 5
Referenced Photos: "7", "8"
2013 - Both fascia girders in all 3 spans have peeling paint and surface rust, especially in lower areas of the girders (Photos 7 & 8). Similar rust and corrosion have occurred on fascia bearings and on superstructure steel beneath joints.

Inspection Notes

Carried: 690I 690I33012057 Crossed: CSX TRANS/PEAT ST CheckValue: 1,828,713,853

Note ID: 3A1310510820007 - continued

The superstructure paint system in remaining areas of all 3 spans is in better condition and would rate '5' or '6' alone.

Note ID: 3A1310510820008

Span 001 -- Superstructure: Joints -- Rated 4, Was 5
Span 002 -- Superstructure: Joints -- Rated 4, Was 5
Referenced Photos: "9", "14"
2013 - The superstructure joints full width of both piers have intact, but with compressed and squeezed joint seals (Photo 9). The undersides of the joints also have corroded armoring angle legs (Photo 14). In addition, the joints leak near both curbs resulting in rust on superstructure steel elements below.

Note ID: 3A1310510820009

Span 001 -- Pier: Bearings, Bolts, Pads -- Rated 4, Was 5
Span 002 -- Pier: Bearings, Bolts, Pads -- Rated 4, Was 5
Referenced Photos: "10", "18", "19"
2013 - The bearings supporting Girders G1 & G6 at both piers (fascia bearings) have rust and corrosion throughout with pack rust developing (Photos 10, 18 & 19). Interior bearings on both piers are in better condition and would rate '5' alone.

Note ID: 3A131051082000A

Span 001 -- Pier: Pedestals -- Rated 4, Was 4
Referenced Photos: "11"
2013 - The right face of Pedestal 6 on Pier 1 has cracking, efflorescence and rust staining. Remaining pedestals on Pier 1 are in better condition and would rate '5' alone.

Note ID: 3A131051082000D

Span 001 -- Pier: Pier Columns -- Rated 4, Was 4
Referenced Photos: "12"
2013 - The following deficiencies were observed on the Pier 1 columns:

Column 1 - Left face 75% of area hollow sounding
Column 2 - Begin face 10% of area hollow sounding
Column 2 - Right face 75% of area hollow sounding
Column 3 - Right and end faces 30% of each area hollow sounding
Column 4 - All four sides have 10% of each area hollow sounding
Column 4 - Vertical cracks with rust staining have developed on the right face

Remaining areas of the Pier 1 columns would rate '5' alone.

Inspection Notes

Carried: 690I 690I33012057 Crossed: CSX TRANS/PEAT ST CheckValue: 1,828,713,853

Note ID: 3A131051082000E - continued

Column 4 - Map cracking and vertical cracks with rust staining have developed on the right face

Remaining areas of the Pier 2 columns would rate '5' alone.

Note ID: 3A1310510820005

Span 003 -- Deck Elements: Sidewalks, Fascias -- Rated 4, Was 4
Referenced Photos: "25", "26"
2013 - Cracking, rust staining and spalling with exposed corroded reinforcement has occurred along approximately 20% of the right and left fascias in Span 3 (Photos 25 & 26).

Remaining areas of the right and left fascias in Span 3 would rate '5' alone with isolated areas of minor cracking.

Inspection Notes

Carried: 690I 690I33012057 Crossed: CSX TRANS/PEAT ST CheckValue: 1,828,713,853

Note ID: 3A131051082000D - continued

Note ID: 3A1310510820004

Span 002 -- Deck Elements: Sidewalks, Fascias -- Rated 4, Was 4
Referenced Photos: "15", "16"
2013 - Spalling with exposed corroded reinforcement has occurred along approximately 20% of the right fascia in Span 2 (Photo 16). One large spall has developed on the right at the begin of Span 2 and almost extends to the bridge railing base plate (Photo 15).

Remaining areas of the right and left fascias in Span 2 would rate '5' alone with isolated areas of minor cracking and rust staining.

Note ID: 3A1310510820006

Span 002 -- Deck Elements: Mono Deck Surface -- Rated 5, Was 5
Referenced Photos: "17"
2013 - Isolated cracks have developed in the mono deck surface scattered throughout Span 2. The mono deck surface in Span 2 is otherwise in good condition.

Note ID: 3A131051082000B

Span 002 -- Pier: Pedestals -- Rated 4, Was 4
Referenced Photos: "20"
2013 - The right faces of Pedestals 1, 2 & 3 on Pier 2 have cracking and rust staining and isolated areas are hollow sounding. Remaining pedestals on Pier 2 are in better condition and would rate '5' alone.

Note ID: 3A131051082000C

Span 002 -- Pier: Cap Beam -- Rated 5, Was 5
Referenced Photos: "21"
2013 - The begin face of the Pier 2 cap beam near the center of the pier has an approximate 6' long crack near the top. Remaining areas of the Pier 2 cap beam are in good condition.

Note ID: 3A131051082000E

Span 002 -- Pier: Pier Columns -- Rated 4, Was 4
Referenced Photos: "22", "23", "24"
2013 - The following deficiencies were observed on the Pier 2 columns:

Column 1 - Left face with cracking, efflorescence, rust staining and spalling with exposed corroded reinforcement on 75% of area (Photo 22)
Column 2 - Right face with cracking, efflorescence, rust staining and spalling with exposed corroded reinforcement on 60% of area (Photo 23)

Inspection Date: 6/20/2013 RC: 33 BIN: 1051082

Inspection Photos in Photo Number Order

Carried: 690l 690l33012057 Crossed: CSX TRANS/PEAT ST CheckValue: 1,828,713,853

Under Begin Joint Bay 5



Photo Number: 1 Photo Filename: 13DSCN7888.jpg

Spalled Joint Header at Begin Pedestal 5



Photo Number: 2 Photo Filename: 13DSCN7889.jpg

Inspection Date: 6/20/2013 RC: 33 BIN: 1051082

Inspection Photos in Photo Number Order

Carried: 690I 690I33012057 Crossed: CSX TRANS/PEAT ST CheckValue: 1,828,713,853

Begin Bearing at Girder G6



Photo Number: 3 Photo Filename: 13DSCN7887.jpg

End Bearing at Girder G1



Photo Number: 4 Photo Filename: 13DSCN7886.jpg

Inspection Date: 6/20/2013 RC: 33 BIN: 1051082

Inspection Photos in Photo Number Order

Carried: 690I 690I33012057 Crossed: CSX TRANS/PEAT ST CheckValue: 1,828,713,853

End Right Guide Railing



Photo Number: 5 Photo Filename: 13DSCN6878.jpg

Top of Bridge - Typical All Spans



Photo Number: 6 Photo Filename: 13DSCN5358.jpg

Inspection Date: 6/20/2013 RC: 33 BIN: 1051082

Inspection Photos in Photo Number Order

Carried: 690I 690I33012057 Crossed: CSX TRANS/PEAT ST CheckValue: 1,828,713,853

Left Fascia Girder - Typical All Spans



Photo Number: 7 Photo Filename: 13DSCN5377.jpg

Right Fascia Girder - Typical All Spans



Photo Number: 8 Photo Filename: 13DSCN5374.jpg

Inspection Date: 6/20/2013 RC: 33 BIN: 1051082

Inspection Photos in Photo Number Order

Carried: 690I 690I33012057 Crossed: CSX TRANS/PEAT ST CheckValue: 1,828,713,853

Top of Pier 1 Joint

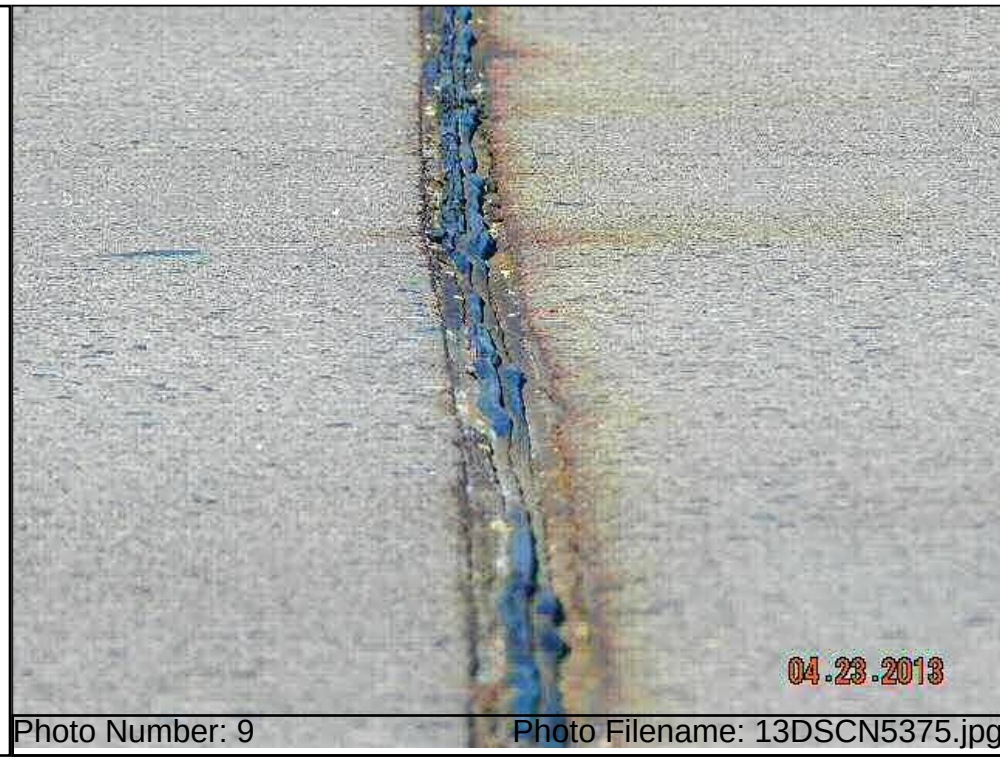

Photo Number: 9 Photo Filename: 13DSCN5375.jpg

Pier 1 Bearing at Girder G6



Photo Number: 10 Photo Filename: 13DSCN5367.jpg

Inspection Date: 6/20/2013 RC: 33 BIN: 1051082

Inspection Photos in Photo Number Order

Carried: 690I 690I33012057 Crossed: CSX TRANS/PEAT ST CheckValue: 1,828,713,853

Pier 1 Pedestal 6 - Right Face



Photo Number: 11 Photo Filename: 13DSCN5366.jpg

Pier 1 Column 4



Photo Number: 12 Photo Filename: 13DSCN5382.jpg

Inspection Date: 6/20/2013 RC: 33 BIN: 1051082

Inspection Photos in Photo Number Order

Carried: 690I 690I33012057 Crossed: CSX TRANS/PEAT ST CheckValue: 1,828,713,853

Top of Span 2



Photo Number: 13 Photo Filename: 13DSCN5370.jpg

Under Pier 2 Joint



Photo Number: 14 Photo Filename: 13DSCN5364.jpg

Inspection Date: 6/20/2013 RC: 33 BIN: 1051082

Inspection Photos in Photo Number Order

Carried: 690I 690I33012057 Crossed: CSX TRANS/PEAT ST CheckValue: 1,828,713,853

Span 2 Right Fascia at Pier 1



Photo Number: 15 Photo Filename: 13DSCN5365.jpg

Span 2 Right Fascia



Photo Number: 16 Photo Filename: 13DSCN5368.jpg

Inspection Date: 6/20/2013 RC: 33 BIN: 1051082

Inspection Photos in Photo Number Order

Carried: 690I 690I33012057 Crossed: CSX TRANS/PEAT ST CheckValue: 1,828,713,853

Top of Span 2



Photo Number: 17 Photo Filename: 13DSCN5359.jpg

Pier 2 Bearing at Girder G1



Photo Number: 18 Photo Filename: 13DSCN5361.jpg

Inspection Date: 6/20/2013 RC: 33 BIN: 1051082

Inspection Photos in Photo Number Order

Carried: 690I 690I33012057 Crossed: CSX TRANS/PEAT ST CheckValue: 1,828,713,853

Pier 2 Bearing at Girder G6



Photo Number: 19 Photo Filename: 13DSCN5371.jpg

Pier 2 Pedestal 2 - Right Face



Photo Number: 20 Photo Filename: 13DSCN5363.jpg

Inspection Date: 6/20/2013 RC: 33 BIN: 1051082

Inspection Photos in Photo Number Order

Carried: 690I 690I33012057 Crossed: CSX TRANS/PEAT ST CheckValue: 1,828,713,853

Pier 2 Cap Beam - Begin Face



Photo Number: 21 Photo Filename: 13DSCN5362.jpg

Pier 2 Column 1 - Left Face



Photo Number: 22 Photo Filename: 13DSCN5379.jpg

Inspection Date: 6/20/2013 RC: 33 BIN: 1051082

Inspection Photos in Photo Number Order

Carried: 690I 690I33012057 Crossed: CSX TRANS/PEAT ST CheckValue: 1,828,713,853

Pier 2 Column 2 - Right Face



Photo Number: 23 Photo Filename: 13DSCN5381.jpg

Pier 2 Column 4 - Right Face



Photo Number: 24 Photo Filename: 13DSCN5376.jpg

Inspection Date: 6/20/2013 RC: 33 BIN: 1051082

Inspection Photos in Photo Number Order

Carried: 690I 690I33012057 Crossed: CSX TRANS/PEAT ST CheckValue: 1,828,713,853

Span 3 Left Fascia



Photo Number: 25 Photo Filename: 13DSCN5380.jpg

Span 3 End Right Fascia



Photo Number: 26 Photo Filename: 13DSCN5369.jpg

Inspection Date: 6/20/2013 RC: 33 BIN: 1051082

Inspection Sketches in Sketch SysID Order

Carried: 690I 690I33012057 Crossed: CSX TRANS/PEAT ST CheckValue: 1,828,713,853

Sketch ID: 3A1310510820000 Sketch Filename: photo_plan.13

General Sketch for Bridge
Referenced Photos:

Photo Location Plan

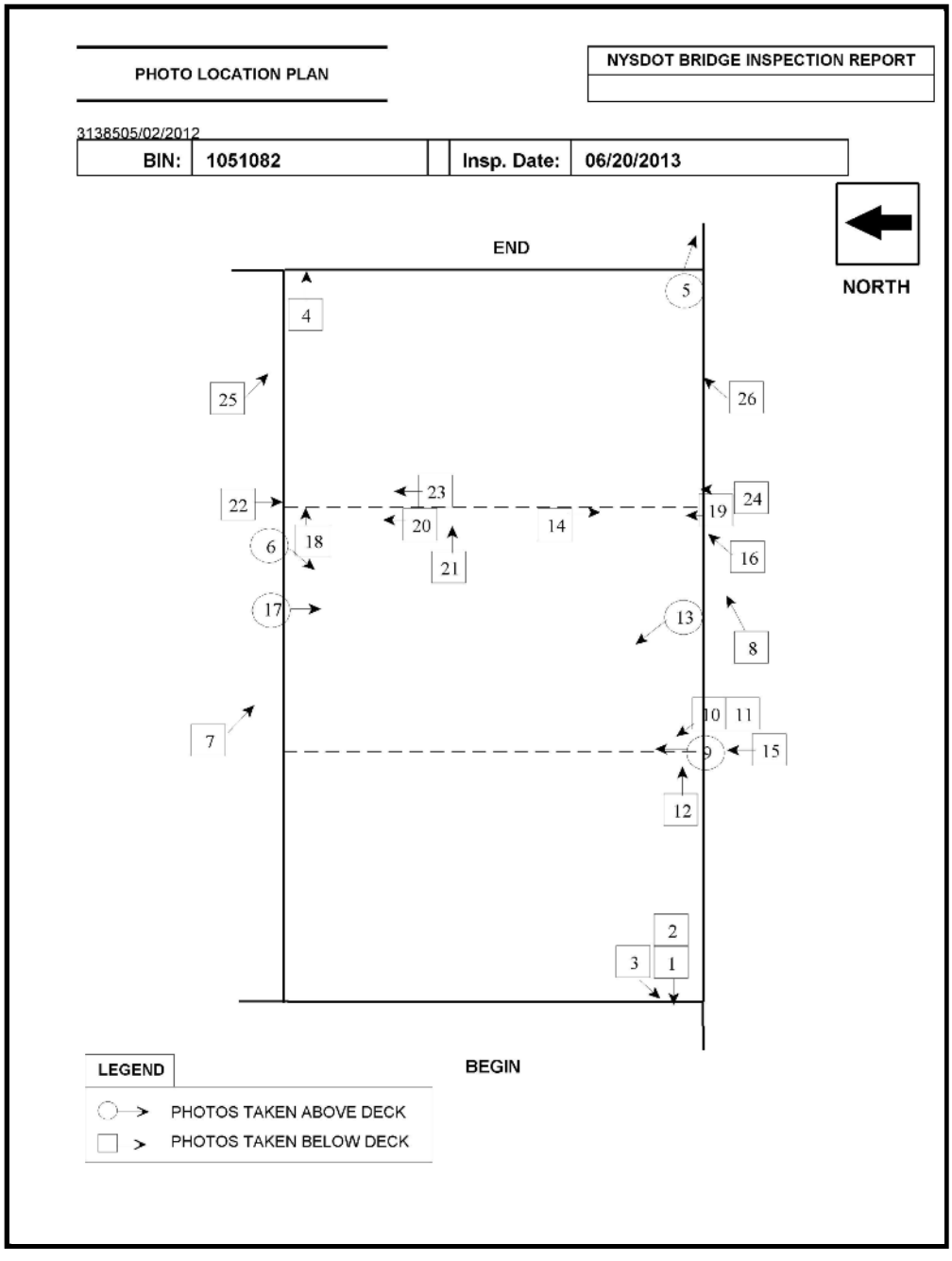

Inspection Date: 6/20/2013 RC: 33 BIN: 1051082

Inspection Sketches in Sketch SysID Order

Carried: 690I 690I33012057 Crossed: CSX TRANS/PEAT ST CheckValue: 1,828,713,853

Sketch ID: 3A1310510820001 Sketch Filename: LdRat.13

General Sketch for Bridge
Referenced Photos:

Load Rating Field Check Form

NYSDOT BRIDGE INSPECTION REPORT			
SHEET	1	OF	1

LOAD RATING FIELD CHECK FORM

BIN:	1051082		Insp. Date:	06/20/2013

Dead Load - Note Changes since Last load Rating or state "NONE":

None

Section Loss - Note locations and amount of loss on each girder or state "NONE":

No significant change since the last inspection.

Additional Notes:

None

Attachments:

None

Team Leader: James W. Gorzynski, NYS PE #53772

Inspection Date: 6/20/2013 RC: 33 BIN: 1051082

Inspection Sketches in Sketch SysID Order

Carried: 690I 690I33012057 Crossed: CSX TRANS/PEAT ST CheckValue: 1,828,713,853

Sketch ID: 3A1310510820002 Sketch Filename: BD244.13

General Sketch for Bridge
Referenced Photos:

Flag Removal/Inactivation

BD 244

NYSDOT BRIDGE INSPECTION REPORT			
SHEET	1	OF	1

Flag Removal/Inactivation Report

Insp. Date:	06/20/2013		BIN:	1051082

Flag Number:		33110003
Type of Flag: (Select one)		RED Flag
		YELLOW Flag
	X	SAFETY Flag

Flag is to be: (Select one)	X	Removed
		Inactivated

Certification By:	James W. Gorzynski, NYS PE #53772

Action Taken:	End right approach guide railing has been repaired.

Prepared By:	D. Tomsa
Date:	06//20/2013

Inspection Date: 6/20/2013 RC: 33 BIN: 1051082

Inspection Sketches in Sketch SysID Order

Carried: 690I 690I33012057 Crossed: CSX TRANS/PEAT ST CheckValue: 1,828,713,853

Sketch ID: 3A1310510820003 Sketch Filename: RR_Clearance.13

General Sketch for Bridge
Referenced Photos:

Railroad Vertical Clearances

PLAN VIEW - RAILROAD VERTICAL CLEARANCES (Feet)

NYSDOT BRIDGE INSPECTION REPORT			
SHEET	1	OF	1

Insp. Date:	06/20/2013	BIN:	1051082

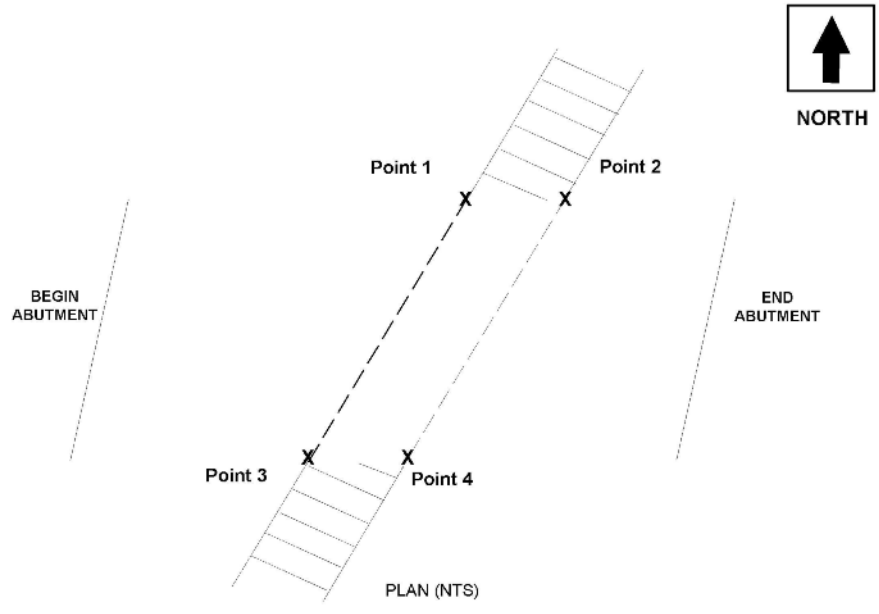

YEAR> / Pt #	2013							
1	24'-7 1/4"							
2	24'-8 1/2"							
3	23'-3 3/8"							
4	23'-4 1/2"							

NOTES: 2013 - Form created and entered into BIPPI.

Inspection Date: 6/20/2013 RC: 33 BIN: 1051082

Gen. Rec., Postings, Federal Ratings, etc.

Carried: 690I 690I33012057 Crossed: CSX TRANS/PEAT ST CheckValue: 1,828,713,853

Overall Condition:

GENERAL RECOMMENDATION: 5

Computed Condition Rating: 4.688

Problems Requiring Action:

NO Further Investigation Needed

NO Flags Issued

POSTINGS:

Inspector Confirmed existing Posting data as correct.
Posted Vertical Clearance ON the bridge is: No Posting
Posted Vertical Clearance UNDER the bridge is: No Posting
No Load Restriction is posted on this bridge

Overloads Observed:

NO Overload Vehicles were observed on this bridge

FEDERAL RATINGS:

NBI Deck Condition: 6
NBI Superstruct Condition: 7
NBI Substruct Condition: 6
NBI Channel Condition: N
NBI Culvert Condition: N

Diving Inspection Needs:

Diving Inspection Required? No Date of Last Diving Inspection: No Date

Inventory Problems:

Inventory Problems Exist? No

Miscellaneous:

Time Required to Inspect Bridge: 3 Hours

Lane Closure Needs: None Required

Railroad Flagging is Required for 1.5 Hours

No Pedestrian Fence

No Snow Fence

The BIN Plate is in OK condition

Inspection Date: 6/20/2013 RC: 33 BIN: 1051082

Gen. Rec., Postings, Federal Ratings, etc.

Carried: 690I 690I33012057 Crossed: CSX TRANS/PEAT ST CheckValue: 1,828,713,853

Special Emphasis Inspection Required:

Non-Redundant/Fracture Critical Members - No
Pin and Hangers - No
Fatigue-Prone Welds - Yes
Non-Categorized Fatigue-Prone Details - No
Other (Specified in Text) - No

Special Emphasis Details:

2013 - Staggered diaphragms are exempt from 100% hands-on inspection because the webs are greater than 3/8" thick.

A 100% hands-on inspection was performed on welds at the ends of all cover plates.

General Notes To the Next Inspector:

2013 - The BIN Plate is mounted on Bay 4 of the begin abutment backwall.

Name of Feature Crossed is CSX Peat Street Lead.

CSX Railroad Milepost QC 1.02.

Staggered diaphragms are exempt from 100% hands-on inspection because the webs are greater than 3/8" thick.

Improvements Observed:

2013 - The damaged approach guide railing at the end right has been repaired.

Inspection Date: 6/20/2013 RC: 33 BIN: 1051082

Review Progress and Personnel Present at Inspection

Carried: 690I 690I33012057 Crossed: CSX TRANS/PEAT ST CheckValue: 1,828,713,853

Inspection Submission Status:

Submitted to QC Engineer on: 8/19/2013
QC Submission Number: A0331401

QC Review Completed: 8/20/2013
QC Engineer: Stephen L. Gauthier

Submitted to Liaison Engineer on: 8/20/2013
Liaison Submission Number: 03325

Liaison Review Completed: 8/26/2013
Liaison Engineer: TODD M. HERMANN

Submitted for BIIS Processing on: 8/26/2013
BIIS Submission Number: .kp1

Current Status: Keypunched, Sent to BIIS
Check Value: 1,828,713,853

Personnel Present During Inspection:

James W. Gorzynski - Team Leader
Debra A. Tomsa - Assistant Team Leader
Laurie A. Orr -

Inspection Date: 6/20/2013 RC: 33 BIN: 1051082

Inspection Access Requirements

Carried: 690I 690I33012057 Crossed: CSX TRANS/PEAT ST CheckValue: 1,828,713,853

Equipment Required for Inspection

Access Requirement Changes WERE Noted During This Inspection.
This Listing is from the Inspection.

ACCESS CATEGORIES FOR ENTIRE BRIDGE
Required: Walking, Medium Lift, Railroad Flagman

ACCESS CATEGORIES FOR SPAN 1
Required: Walking, Medium Lift, Railroad Flagman

ACCESS CATEGORIES FOR SPAN 2
Required: Walking, Medium Lift, Railroad Flagman

ACCESS CATEGORIES FOR SPAN 3
Required: Walking, Medium Lift, Railroad Flagman

Inspection Date: 6/20/2013 RC: 33 BIN: 1051082

Culvert Measurements

Carried: 690I 690I33012057 Crossed: CSX TRANS/PEAT ST CheckValue: 1,828,713,853

Culvert Measurements

NO CULVERT DATA FOR BIN 1051082

Standard Photos **RC: 33 BIN: 1051082**

Carried: 690I 690I33012057 Crossed: CSX TRANS/PEAT ST

1051082_LOCATION_MAP.JPG

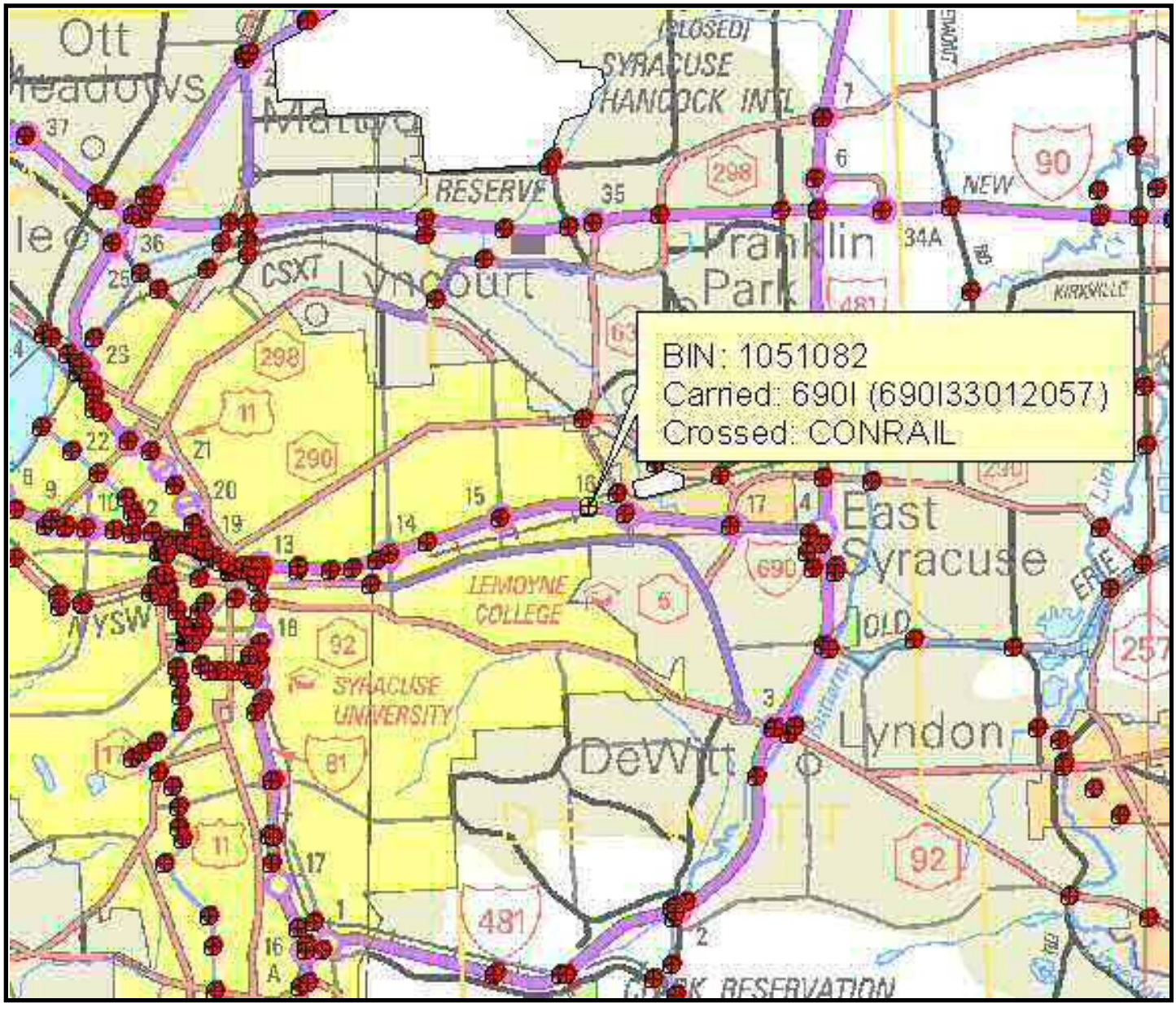

Standard Photos **RC: 33 BIN: 1051082**

Carried: 690I 690I33012057 Crossed: CSX TRANS/PEAT ST

1051082_QUAD_MAP.JPG

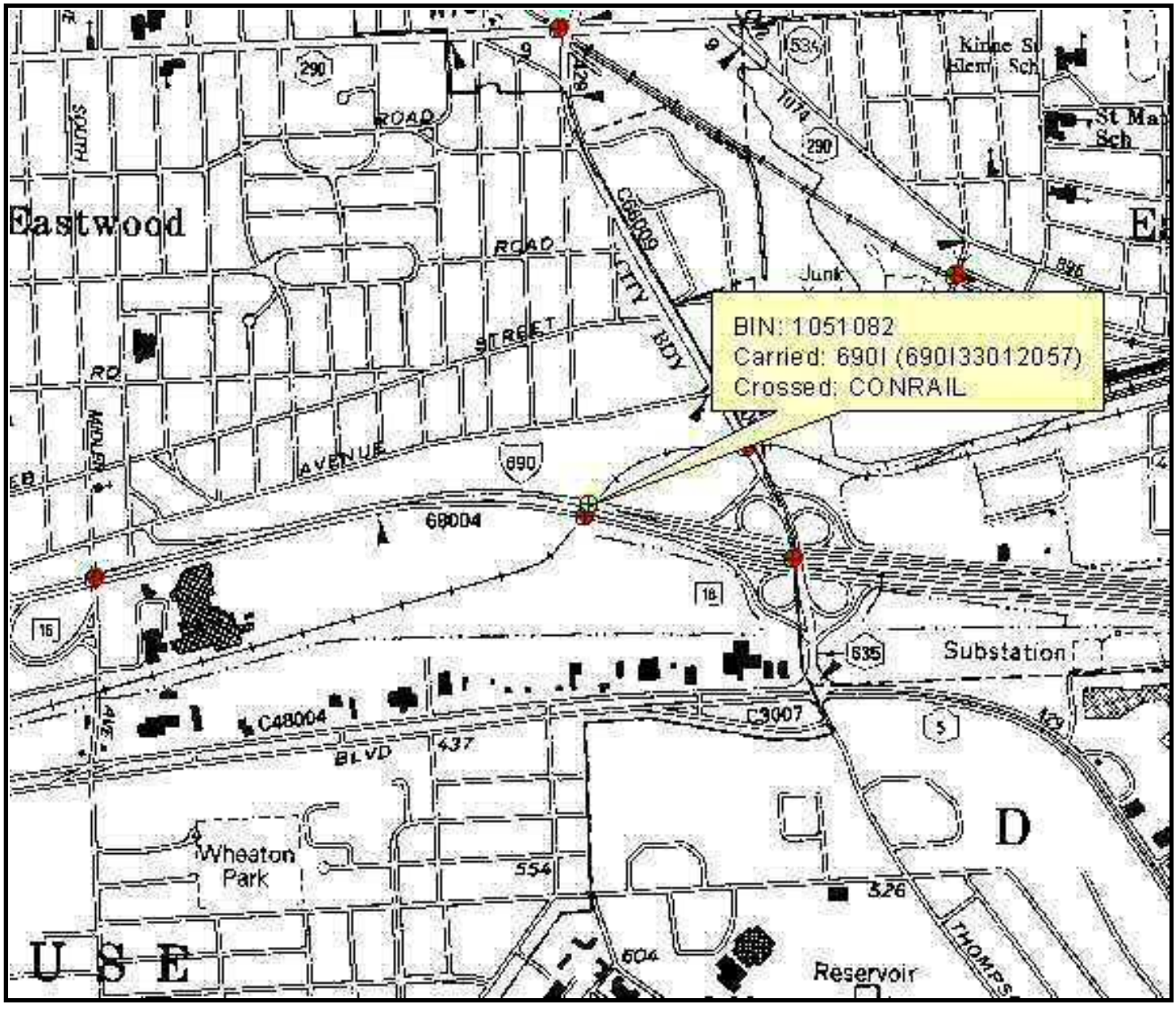

Standard Photos **RC: 33 BIN: 1051082**

Carried: 690I 690I33012057 Crossed: CSX TRANS/PEAT ST

AbutmentEnd.11.jpg



Standard Photos **RC: 33 BIN: 1051082**

Carried: 690I 690I33012057 Crossed: CSX TRANS/PEAT ST

ApproachBegin.11.jpg



Standard Photos **RC: 33 BIN: 1051082**

Carried: 690I 690I33012057 Crossed: CSX TRANS/PEAT ST

ApproachEnd.11.jpg



Standard Photos **RC: 33 BIN: 1051082**

Carried: 690I 690I33012057 Crossed: CSX TRANS/PEAT ST

ElevationSpan1&2&3.11.jpg



Standard Photos **RC: 33 BIN: 1051082**

Carried: 690I 690I33012057 Crossed: CSX TRANS/PEAT ST

F2CrossedSpan1&2&3Left.11.jpg

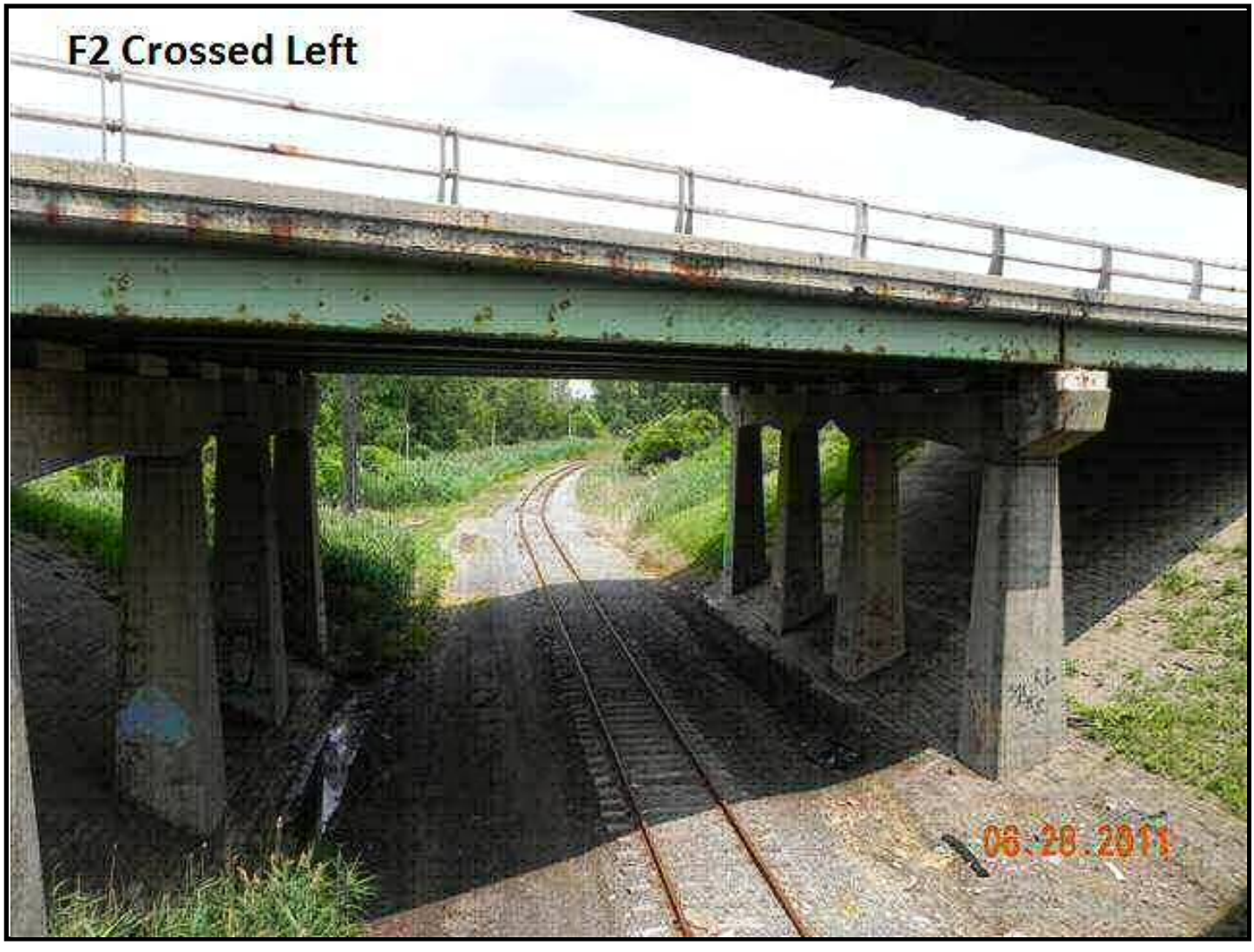

Standard Photos **RC: 33 BIN: 1051082**

Carried: 690I 690I33012057 Crossed: CSX TRANS/PEAT ST

F2CrossedSpan1&2&3Right.11.jpg



Standard Photos **RC: 33 BIN: 1051082**

Carried: 690I 690I33012057 Crossed: CSX TRANS/PEAT ST

FramingSpan2.11.jpg

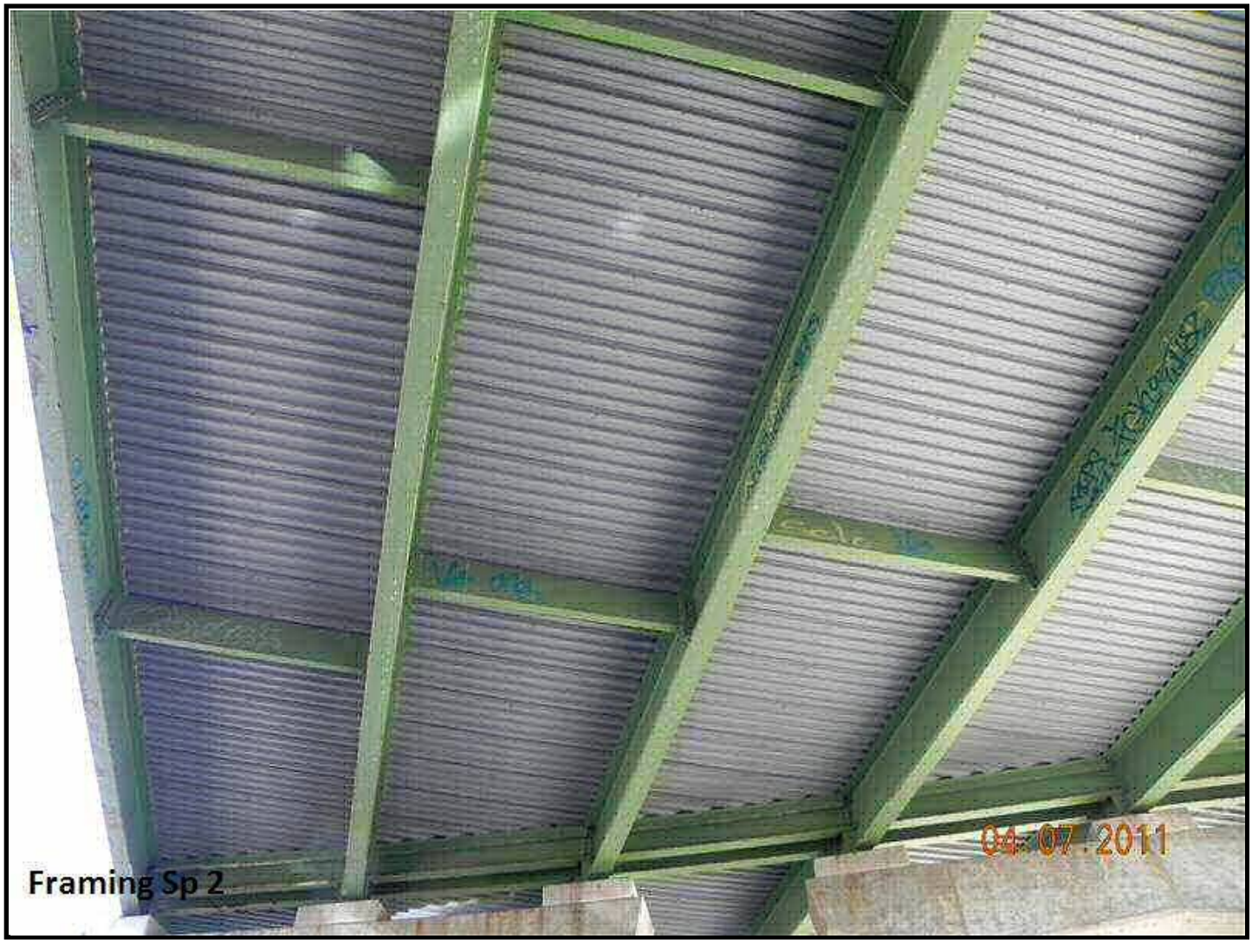

Pier2.11.jpg



LEVEL 1 LOAD RATING SUMMARY SHEET

Region/County Region 3/Onondaga BIN 1051082
Feature(s) Carried and Crossed I-690 Eastbound/CSX Trans/Peat St.
Date of field inspection upon which Level 1 rating is based 3/28/2014

OVERALL BRIDGE RATTNGS (BASED ON LOWEST RATED ELEMENTS):

Total number of rating units 1

	H inventory	H operating	HS inventory	HS operating
Rating	H 34.65 (tons)	H 57.87 (tons)	HS 43.57 (tons)	HS 72.77 (tons)
Lowest rated element	Interior Girder B38 to B41 (Span 3)	Interior Girder B38 to B41 (Span 3)	Interior Girder B38 to B41 (Span 3)	Interior Girder B38 to B41 (Span 3)

Analysis method LFR Comments

Individual Rating Unit Level 1 values:

Rating unit span(s) 1

Main member ratings

	H inventory	H operating	HS inventory	HS operating
Rating	H (tons)	H (tons)	HS (tons)	HS (tons)
Lowest rated element				

Analysis method Comments

Floorbeam ratings

	H inventory	H operating	HS inventory	HS operating
Rating	H (tons)	H (tons)	HS (tons)	HS (tons)
Lowest rated element				

Analysis method Comments

Stringer ratings

	H inventory	H operating	HS inventory	HS operating
Rating	H 34.65 (tons)	H 57.87 (tons)	HS 43.57 (tons)	HS 72.77 (tons)
Lowest rated element	Interior Girder B38 to B41 (Span 3)	Interior Girder B38 to B41 (Span 3)	Interior Girder B38 to B41 (Span 3)	Interior Girder B38 to B41 (Span 3)

Analysis method LFR Comments

Certified by Date

Quality Control Engineer Signature Date
Agency or Company represented by certifier

Note:
-If connection ratings govern, record them under stringer ratings for stringer – floorbeam connection, floorbeam ratings for floorbeam-main member connections, etc.
-When Level 1 results indicated the need for load posting or other corrective action, the NYSDOT Regional Structures Engineer shall be notified immediately.
-Load ratings should be filed in the regional office within 60 days of completion of calculations.
-Bridges shall be flagged based on Level I results in accordance with the current NYSDOT flagging procedure.
-Bridge load posting, closure, etc. determinations shall be made as results are being produced.

PARSONS

100 Broadway
New York, NY 10005
Phone: 212-266-8300
Fax: 212-571-6825
www.parsons.com

TECHNICAL MEMORANDUM

FROM: Kian Siang Chau, P.E
NYSPE 082744

DATE: JUNE 16, 2014

RE: SEISMIC SCREENING SUMMARY
NEW YORK STATE DEPARTMENT OF TRANSPORTATION
D031085; PIN 3501.60; I-81

BIN: 1051082 (I-690 Eastbound / CSX Trans/Peat St)

This memorandum summarizes the seismic screening conducted for BIN 1051082 as part of the Interstate 81 Project in Syracuse, NY. The purpose of the screening is to determine if seismic retrofits are warranted at the superstructure to substructure connection, and if further seismic evaluation of the structure is required. This memorandum will give the screening results, retrofits required and recommendations for further seismic evaluation of the structure.

SCREENING PROCEDURE

The seismic screening was performed in accordance with the FHWA Seismic Retrofitting Manual for Highway Structures: Part 1 - Bridges, January 2006. As per the referenced manual, seismic screenings were performed for both lower level and upper level earthquake ground motion. The lower level earthquake ground motion has a reasonable likelihood of occurrence within the life of the bridge (50% probability of exceedance within a 75 year bridge life). The upper level earthquake ground motion has a finite likelihood of occurrence within the life of the bridge (7% probability of exceedance within a 75 year bridge life).

Values for the spectral acceleration for the Syracuse area used in the screening are as follows:

- Lower Level Earthquake Ground Motion for a Short Period (0.2 seconds): $S_S = 0.0251$
- Lower Level Earthquake Ground Motion for a Long Period (1.0 seconds): $S_1 = 0.0076$
- Upper Level Earthquake Ground Motion for a Short Period (0.2 seconds): $S_S = 0.139$
- Upper Level Earthquake Ground Motion for a Long Period (1.0 seconds): $S_1 = 0.047$

These values are considered constant and are the same for all seismic screenings of bridges in the Syracuse area.

The Site Class is based on the soil conditions at the bridge location. It was determined that this parameter has little effect on the results of the seismic screening because the spectral acceleration values for the Syracuse area are small. Based on this, a site class of D was used for all seismic screenings of bridges in the Syracuse area.

Bridge parameters used in the seismic screening were retrieved from the record drawings and WinBolts data.

The seismic screening takes into account the anticipated service life, importance, and the seismic exposure of the bridge to determine a seismic retrofit category (SRC). The SRC is then used to determine seismic evaluation methods and retrofit measures. There are four SRCs, A through D. Seismic retrofit category A is the lowest category; bridges in this category do not require retrofits or further seismic evaluation. Seismic retrofit category D is the highest category; bridges in this category requiring the most rigorous seismic evaluations and retrofits.

SCREENING RESULTS

The SRC for the bridge is "**C**" for lower level earthquake ground motion and "**B**" for upper level earthquake ground motion.

RETROFITS REQUIRED

No seismic retrofits are required for the bridge superstructure to substructure connection.

RECOMMENDATIONS FOR FURTHER SEISMIC EVALUATION

For the lower level earthquake ground motion, it is recommended that capacity/demand ratios for bridge components are calculated as per Section 5.4 of the referenced manual. For the upper level earthquake ground motion, it is recommended that the capacities of the bearings are checked as per Section 5.2 of the referenced manual.

Retrofit cost estimates will be provided after any further required seismic evaluations are completed.

PARSONS

100 Broadway
New York, NY 10005
Phone: 212-266-8300
Fax: 212-571-6825
www.parsons.com

TECHNICAL MEMORANDUM

FROM: Kian Siang Chau, P.E
NYSPE 082744

DATE: JULY 1, 2014

RE: FATIGUE EVALUATION
NEW YORK STATE DEPARTMENT OF TRANSPORTATION
D031085; PIN 3501.60; I-81

BIN: 1051082 (I-690 Eastbound / CSX Trans/Peat St.)

This memorandum documents a fatigue evaluation conducted for the existing Interstate 81 Viaduct Project. Existing structures with AASHTO Category D, E, and E' fatigue-prone details require 100% hands-on inspection unless proven to be exempt. The purpose of the evaluation is to assess the remaining life of fatigue-prone components.

EVALUATION PROCEDURES

The fatigue evaluation was performed in accordance with the AASHTO Guide Specification for Fatigue Evaluations of Existing Steel Bridges, 1990. Fatigue-prone welds identified in the biennial inspection reports were located on record drawings and confirmed visually in the field. Additional information concerning fatigue-prone welds located in BIN folders was also obtained and reviewed prior to inspection.

EVALUATION RESULTS

The results of the fatigue evaluation of the existing bridge are shown below. The remaining safe fatigue life of the fatigue components have been **exhausted**.

Fatigue Detail Location	Remaining Safe Fatigue Life (Years)	Remaining Mean Fatigue Life (Years)
Interior Girders, End of Bottom Flange Cover Plate	10.84	157.08
Exterior Girders, End of Bottom Flange Cover Plate	-11.99	44.77

BRIDGE DECK EVALUATION REPORT

RECOMMENDATIONS

The bridge deck inspection findings and evaluation are used as a tool for developing the scope of work and cost estimates for the development and comparison of alternatives for the overall project.

The total damaged area of the deck is 0.6% of the total deck surface area. The cores indicate the reinforcement steel is 4.25 inches to 4.5 inches below the surface of the deck. The lab test indicates that chloride ion concentrations at all the sample locations are significantly higher than the corrosion threshold for steel.

Due to the age, condition and high chloride ion content of the bridge deck concrete, the bridge deck should be rehabilitated or replaced to meet the current standards and to mitigate excessive future maintenance costs.

ALTERNATIVES

- Rehabilitation Alternative - 2 inch Bonded Concrete Overlay
  - The removal of the top 2 inches of the existing deck will remove a portion of the deck with high chloride ion concentrations. It can be anticipated that chloride ions will continue to migrate into the remaining deck to the reinforcing steel resulting in further corrosion-related deterioration of the deck surface. This alternative will result in an estimated extended useful life expectancy of 20 years.

  The design life of the project is 30 years (ETC + 30). This alternative does not meet the project objectives of obtaining 30 years of service life and is not evaluated further.

- Rehabilitation Alternative – 100% Deep Removal and Partial Deck Reconstruction
  - Scope

    The scope of this alternative will include the complete removal of the bridge railings, curb and safety walks, and fascias to the level of the original top of the deck. The joint will be removed. The scope of this alternative will include partial depth reconstruction with removal of the concrete to at least 1 inch below the top mat of the reinforcement steel. Additionally, any further areas of deteriorated concrete detected will require full depth removal. Any corrosion of the reinforcement steel will be removed by sandblasting or hydro-blasting. The proposed deck partial reconstruction will be a nominal 5.75 inches

thick concrete deck yielding a 9.5 inches standard thickness deck. A new single-sloped concrete barrier and a new armorless joint will be installed. The Level 1 Load Rating for the final condition was found to be acceptable.

- Useful Life Expectancy

  This alternative will provide an estimated extended useful life expectancy of 35 years.

- Cost Estimate

  The estimated cost for this alternative is $745,000. The Engineer's Opinion of Probable Construction Cost worksheet is at the end of this section.

- Replacement Alternative – Cast-In-Place Concrete
  - Scope

    This scope of this alternative will include the complete demolition of the existing bridge deck, bridge railings, curb and safety walks, fascias and bridge joint. The bridge deck will be replaced with a new 9.5 inches standard thickness concrete deck. A new single-sloped concrete barrier and a new armorless joint will be installed. The Level 1 Load Rating for the final condition was found to be acceptable.

  - Useful Life Expectancy

    This alternative will provide an estimated extended useful life expectancy of 40+ years.

  - Cost Estimate

    The estimated cost for this alternative is $977,000. The Engineer's Opinion of Probable Construction Cost worksheet is at the end of this section.

- Replacement Alternative – Pre-cast Concrete Deck Panels
  - Scope

    The scope of this alternative is similar to the Cast-In-Place Concrete Deck Replacement Alternative except the deck structure will be precast panels. This alternative offers reduced construction time over conventional construction.

  - Useful Life Expectancy

    This alternative will provide an estimated extended useful life expectancy of 40+ years.

  - Cost Estimate

    The comparison of accelerated construction to conventional construction is beyond the current scope of this evaluation.

IN-DEPTH INSPECTION REPORT

D031085 P.I.N. 3501.60

ELEMENT SPECIFIC BRIDGE WORK

B.I.N. 3/3 1051120

TEAM LEADER George H Stam, P.E. 056216
NYSPE LICENSE #

ASSISTANT TEAM LEADER Timothy Olmstead

FEATURE CARRIED I-481 Northbound

FEATURE CROSSED I-690 EB Connection (Future)

DATE FIELD WORK BEGAN 2/3/14

DATE FIELD WORK COMPLETED 2/24/14

TABLE OF CONTENTS

- STRUCTURE IDENTIFICATION
- INTRODUCTION
- PROJECT LOCATION MAP
- IN DEPTH CONDITION DOCUMENTATION
- PLANS & SKETCHES
- IN DEPTH PHOTO DOCUMENTATION
- ASBESTOS SAMPLING SURVEY
- LATEST BIENNIAL INSPECTION REPORT

STRUCTURE IDENTIFICATION

a.	Bridge Identification Number (BIN):	3/3 1051120
b.	Reference Marker:	481I 3301 2058
c.	Region:	NYSDOT Region 3
d.	County:	Onondaga
e.	Town:	Dewitt
f.	Feature Carried:	I-481 Northbound
g.	Feature Carried:	I-690 E.B. Connection (Future)
h.	Orientation:	North

INTRODUCTION

a. Bridge History

i.	Year Built:	1971
ii.	Bridge Type:	Single Span, Steel Multi-girder
iii.	Span Length:	119 feet
iv.	Out-to-Out Width:	66 feet
v.	Skew Angle:	7°
vi.	Structural Ratings and Rankings	
	1. Federal Sufficiency:	92.8 (May 2012)
	2. Condition Rating:	5.297 (May 2012)
	3. General Recommendation:	6 (May 2012)
vii.	Live Load Posting (HS25):	No
viii.	National Highway System (NHS):	Yes
ix.	Previous work Done:	1981 – Replace wearing surface (asphalt concrete overlay) with concrete overlay 1987 – Repair damaged railing 1998 – Replace joints 2004 – Asbestos testing
x.	Planned Future Work:	N/A

b. Highway Classification

i. Functional Classification: Urban Principle Arterial - Interstate

ii. Traffic Volumes

YEAR	AADT
2014	50452
2034	74969
2054	111400

PROJECT LOCATION MAP

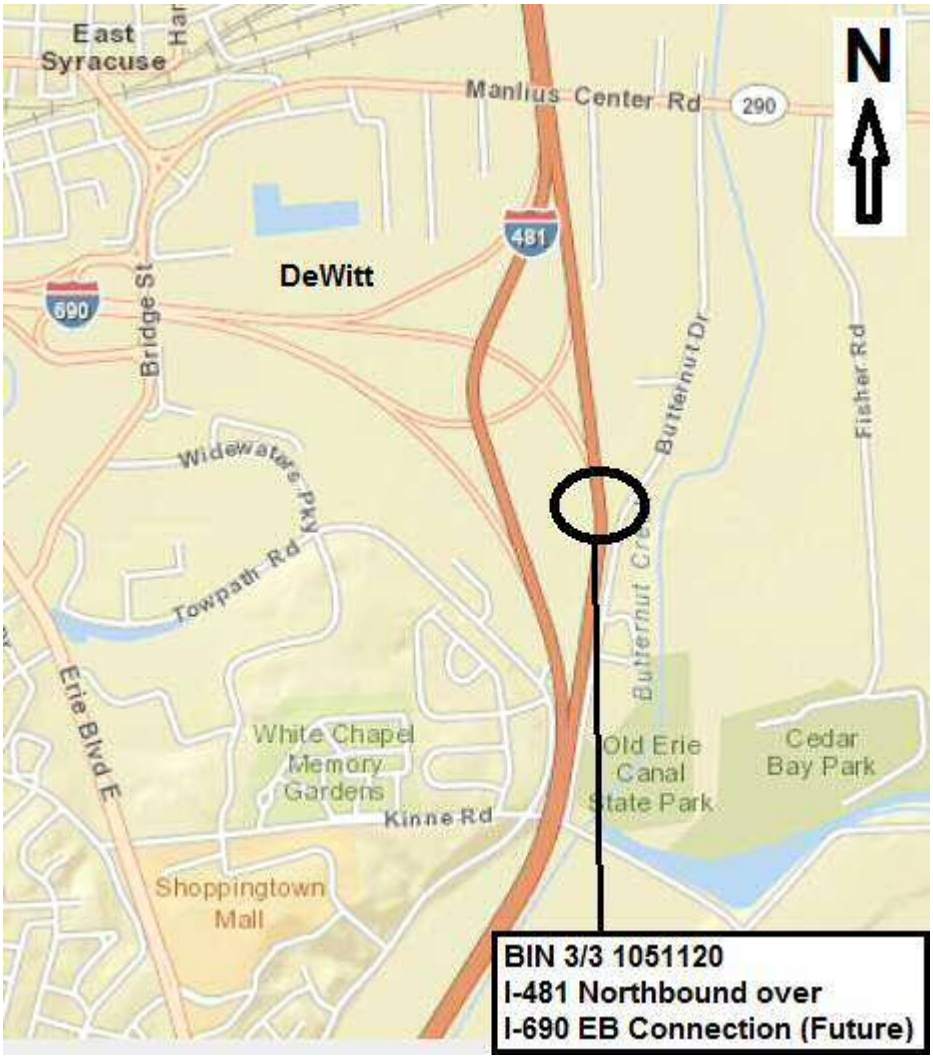

IN-DEPTH CONDITION DOCUMENTATION

NYS DEPT. OF TRANSPORTATION **SHEET: 1 OF 5**
BRIDGE INSPECTION REPORT **BIN: 1051120** **DATE: 2/3/2014 & 2/24/2014**

FEATURE CARRIED: I-481 NB **TEAM LEADER: G. STAM**
FEATURE CROSSED: I-690 EB RAMP **ASSIST. TEAM LEADER: T. OLMSTEAD**

ITEM	REMARKS	PHOTO NO.
	BEGIN ABUTMENT ITEMS	
TP 349-22	Begin Abutment - Joint with Deck: The begin bearings are expansion. The begin joint is steel armored compression seal type in poor condition. The steel armor plate is rusted throughout with several bent locations from impact damage (Photo 1). The concrete headers are in poor condition. Both headers are cracked at one foot to 3 foot intervals (Photo 1). The begin side header is cracked and segmented 3 inches wide x 2 feet long in the 2nd lane from the left (Photo 2); and severely spalled and segmented with exposed reinforcement 5 feet wide x 5 inches deep in the 3rd lane from the left (Photo 3). The armor plate anchor studs are exposed and debonded; and the armor plate is cracked through at the right side of the spall (Photos 4 & 5). The compression seal is generally in satisfactory condition except at the damaged header location where the armor plate is loose and the seal has sagged (Photo 5). There is severe leakage down the backwall in bay 3 (Photo 6).	1,2,3,4 5,6
TP 349-24	Begin Abutment – Bearings: The begin bearings are expansion. The fascia bearings are rusted with pack rust between the sole plates and the sliders; and between the bronze sliding plate and the masonry plate (Photos 7 & 8). The front edges of the bronze sliding plates are warped. All of the bearings are in a normally contracted position at 30 ºF. The bearing slider at G1 is misaligned +/- 0.5 inch in relationship to the masonry plate with the front edge of the slider overhanging the bronze sliding plate by ¼ inch at the left side, and at the right side, the slider is inside of the front edge of the bronze sliding plate by ¼ inch (Photo 9). There are no cracks or other distortions evident. The interior bearings are in better condition.	7,8,9
TP 349-26	Begin Abutment - Seat and Pedestals: The begin seat is cracked along the left front edge in pedestal bay 1 (Photo 10). The remainder of the seat is in good condition with only minor scattered shrinkage cracking and no hollow areas detected. Pedestal P1 is tight mapcracked over 50% of the right side but no hollow areas detected (Photo 10). Pedestal P8 has a full height crack on the front face and tight mapcracking on the left side (Photos 11 & 12). There is a 0.5 square foot hollow sounding area on the top of pedestal P8 at the front right corner of the masonry plate and several tight cracks on the top. See Begin Abutment Deterioration Sketch. The interior pedestals are in good condition with no significant cracks or hollow areas detected.	10,11,12
TP 349-28	Begin Abutment – Backwall: The entire backwall has tight hairline mapcracking (Photo 13). At the top left side, there is cracking along the edge of a patch with seepage and heavy efflorescence down the backwall (Photo 14). There are several hairline vertical cracks as shown on the Begin Abutment Deterioration Sketch. At the left fascia bay (Photo 14) and in girder bay 3 (Photo 6), there is leakage and heavy seeping of water down the backwall.	6,13,14

ITEM	REMARKS	PHOTO NO.
TP 349-30	Begin Abutment – Stem: The stem has a patchwork of various vintage repairs and has a surface sealant applied. There are scattered vertical hairline cracks as shown on the Begin Abutment Deterioration Sketch. A 2 square foot hollow sounding area is noted beneath the right side of pedestal P2 (Photo 15). No other significant cracks or hollow areas were detected.	15
	END ABUTMENT ITEMS	
TP 349-23	End Abutment - Joint with Deck: The end bearings are fixed. The steel armor angle was removed and replaced with a concrete pavement transition header. At the top, there is no joint visible. The concrete transition header is severely cracked, segmented and spalled up to 3 inches deep with exposed reinforcement in the two left lanes and left shoulder (Photo 16 & 17).	16,17
TP 349-25	End Abutment – Bearings: The end bearings are fixed. All of the bearings have pack rust between the rocker and the masonry plate that restricts movement. The fascia bearings G1 and G8 are the worst (Photos 18 & 19).	18,19
TP 349-27	End Abutment - Seats and Pedestals: Seat - The front edge of the seat is cracked 2 feet long with staining in pedestal bay 1 (Photo 20). The remainder is in good condition with no significant cracks or hollow areas detected.	20
	Pedestals – The top and front face of pedestal P1 has a hairline crack at the left side of the masonry plate. Also, pedestal P1 has a 1/8 inch wide crack on the top from the right anchor bolt wrapping down the right side (Photo 21). There is staining and efflorescence bleeding from the crack. Pedestal P8 has a similar crack on the right side but less severe (Photo 22). The remaining pedestals are in good condition with no significant cracks or hollow areas detected.	21,22
TP 349-29	End Abutment – Backwall: There is seepage down the left side backwall with efflorescence and staining (Photo 23) and there is tight hairline mapcracking throughout the left side (Photo 24). There are scattered vertical hairline cracks with efflorescence (Photos 24 & 25) as illustrated on the End Abutment Deterioration Sketch. At the right fascia bay, there is hairline mapcracking with efflorescence (Photo 26).	23,24,25 26
TP 349-31	End Abutment – Stem: There is seepage down the left side stem wall with efflorescence and staining and a 10 square foot hollow sounding area with a 2 feet high x 3 inches wide x 1 inch deep spall are noted at the left side beneath pedestal bay 1 (Photo 27). There are scattered vertical hairline cracks as shown on the End Abutment Deterioration Sketch (Photo 28).	27,28

ITEM	REMARKS	PHOTO NO.
	APPROACH ITEMS	
TP 349-53	Approach - Drainage: There is a build-up of gravel along the begin left approach which traps runoff along the curb and there is shallow ponding at the begin left joint (Photo 29). At the end left approach, the concrete pavement transition header is raised 0.5 inch which traps runoff and there is shallow ponding on the deck at the end left curbline (Photos 17 & 30). The poor drainage conditions at the left side begin and end pavement transitions allow runoff to seep into the pavement and abutment backfill. There is leakage and seepage evident at the begin and end left backwalls (Photos 14 & 23).	14,17,23 29,30
TP 349-55	Approach - Settlement: There is no significant settlement at the begin approach, however, the deteriorated concrete joint header causes a bump with poor ride quality (Photo 3). At the end left approach, the concrete pavement transition header is raised 0.5 inch and the poor condition of the transition header causes a poor ride quality (Photo 16).	3,16
TP 349-57	Approach - Pavement: At both approaches, the asphalt pavement adjacent to the bridge is transverse cracked and raveled with up to 4 inches wide x up to 2 inches deep potholes along the concrete headers. (Photos 2 & 16).	2,16
	DECK ITEMS	
TP 350-19	Deck - Wearing Surface: The ride quality of the deck is smooth (Photo 31). There is severe wear of the deck surface with most of the transverse traction grooving polished smooth.	31
TP 350-20	Deck - Curbs: The granite curbs are in good condition. There are scattered locations where the curb joints have missing mortar (Photo 32). The average curb reveal is +/- 8 inches.	32
TP 350-21	Deck - Sidewalks and Fascias: Sidewalks – Left - The left safety walk has light mapcracking with light efflorescence over approximately 80% of the surface (Photo 33). There are several patched areas that wrap vertically around the upper portion of the fascia. Several of the patches are deteriorating with cracks and spalls along the edges of the patches. The worst is between railing posts # 8 and #9 where the patch is spalled and the surface scaled up to 1.5 inches deep with exposed reinforcement (Photo 34). The area has a crumbly concrete surface over an 8 square foot area. There are several longitudinal cracks 2 to 3 feet long along the outside of railing posts # 6 and #8. There is a 1 square foot area of hollow sounding concrete at railing post #8.	33,34
	Right - The right safety walk has map cracking throughout. There are longitudinal cracks over 50% of the length and one to two square foot spalled areas up to 2 inches deep with scattered hollow areas in 50% of the railing bays (Photo 35). The concrete surrounding the spalls is damp and crumbly.	35

ITEM	REMARKS	PHOTO NO.
	Fascias – Left - The upper (safety walk) portion of the left fascia is tight mapcracked with light efflorescence over approximately 80 % of the surface (Photo 36). The worst areas are near the bridge railing posts. The area between railing posts #8 and #9 has a spall that is wrapped around the top edge from the safety walk above (Photo 34). Near railing post #10, there is a full height x 6 inches wide x 1 inch deep spall (Photo 37). The lower portion of the left fascia has tight mapcracking over most of the surface. Near the begin 1/3rd span, there is a tight horizontal crack with efflorescence leakage just below the upper safety walk (Photo 36). Below railing post #10, there is a 2 feet long x 6 inches high x 2 inches deep spall (Photo 37).	34,36,37
	Right - The upper (safety walk) portion of the right fascia is mapcracked with light efflorescence over approximately 10% of the surface (Photo 38). The worst area is in the begin ¼ of the span. The lower portion of the right fascia has tight mapcracking over 50% of the surface. There are several scattered areas of horizontal cracks with light efflorescence (Photo 38).	38
TP 350-22	Deck - Railings: The railings are generally in good condition. The galvanized surface is dull with only minor rust freckling of the galvanized surface. On the right side, the railing is rusted in the vicinity of the railing splices but no rust through holes were noted (Photo 39). At the end left, the bottom rail is bent 3 inches upward and 3.5 inches outward from impact damage (Photo 40). The rail is still firmly attached to the posts.	39,40
	SUPERSTRUCTURE ITEMS	
TP 350-27	Structural Deck: Record plans indicate the original structural deck was 8 inches thick concrete mono deck. The plans indicate the original curb height was 10 inches. The plans do not indicate stay-in-place (SIP) forms; however, there are existing SIP forms in-place. Records indicate the deck was repaired, the surface was scarified and it received a 1.75 inch concrete overlay in 1981. The existing curb height is 8 inches. Given the existing SIP's and the 8 inch curb reveal, it is likely that the deck overlay thickness was at least 2 inches yielding a 10 inches thick deck.	
	Top of Deck - There is random cracking throughout with scattered hollow areas as illustrated in the Top of Deck Deterioration Sketch. The total hollow sounding and spalled area of the deck is 1.4% of the surface. Additionally, specific deck conditions are noted	
	• Near the begin in all lanes – a meandering transverse 1/8 inch to ¼ inch wide crack with adjacent hollow sounding areas (Photos 41 & 42).	41,42
	• Lane 1 near end – a pattern of transverse cracking at +/- 2 feet interval (Photo 43).	43
	• Lane 1 at the end – severely cracked with transverse and diagonal cracking (Photo 44).	44
	• Lane 2 @ left side construction joint – a 1/8 inch wide crack 80% of the span length (Photo 45).	45
	• Lane 3 @ middle construction joint - a hairline to 1/8 inch wide crack 50% of the span length and a 3.5 feet long x up to 3 inches wide x 2.5 inches deep spall along the crack near 2/3 span (Photo 46).	46

ITEM	REMARKS	PHOTO NO.
	Underdeck – The underside of the deck is SIP forms in good condition (Photo 47). There is minor surface rusting of the SIP forms at the begin in girder bays 3 and 4 where there is leakage at the begin joint header (Photo 48).	47,48
TP 350-28	Primary Members: The primary members are in good condition with only surface rusting where the paint has blistered or peeled (Photo 47). No significant section loss was noted.	47
TP 350-29	Secondary Members: The secondary members (diaphragms) are in good condition with only surface rusting where the paint has blistered or peeled. No significant section loss was noted.	
TP 350-30	Paint: The paint system is failed on less than 5% of the surfaces of the girders and diaphragms (Photo 47). There is cracking and peeling of the paint on the bottom flanges. The worst is the outside bottom flange of the left fascia girder (Photo 49). The outside web of the right fascia girder has scattered blistering and peeling paint over 5% of the surface (Photo 50). There is surface rusting where the paint has peeled or blistered.	47,49,50
	UTILITIES ITEMS	
TP 350-43	Lighting: None.	
TP 350-44	Sign Structure: None.	
TP 350-45	Utilities and Support: None visible.	
	SPECIAL EMPHASIS ITEMS Special Emphasis Inspection Required · Non-Redundant/Fracture Critical Members – No · Pin and Hangers – No · Fatigue-Prone Welds – Yes · Non-Categorized Fatigue-Prone Details – No · Other – No Special Emphasis Details · Diaphragm gusset plate welded connections to bottom flanges of all girders.	

PLANS & SKETCHES

FJS-85 Tom Leaper 9/27/94 PJS 9 1988

BIN 1051120

FISH 68-9 FISH 68-5 FISH 68-6P

FED. RD. DESIG. NO.	STATE	FEDERAL PROJECT AID NO.	SHEET NO.	TOTAL SHEETS
I	NEW YORK		177 F1	

INTERSTATE ROUTE CONNECTING 57 TO BUTTERNUT INTERCHANGE

Sheet 177 F1 voids all of Original Sheet 177 FIELD CHANGE SHEET

Douglas L Hellyer 9/20/96
Thomas W Cook 9/27/96
Douglas C Hellyer 6/14/96
Thomas W Cook 05/29/02
T R Francis 5/6/04
D S Hunn 5/21/12

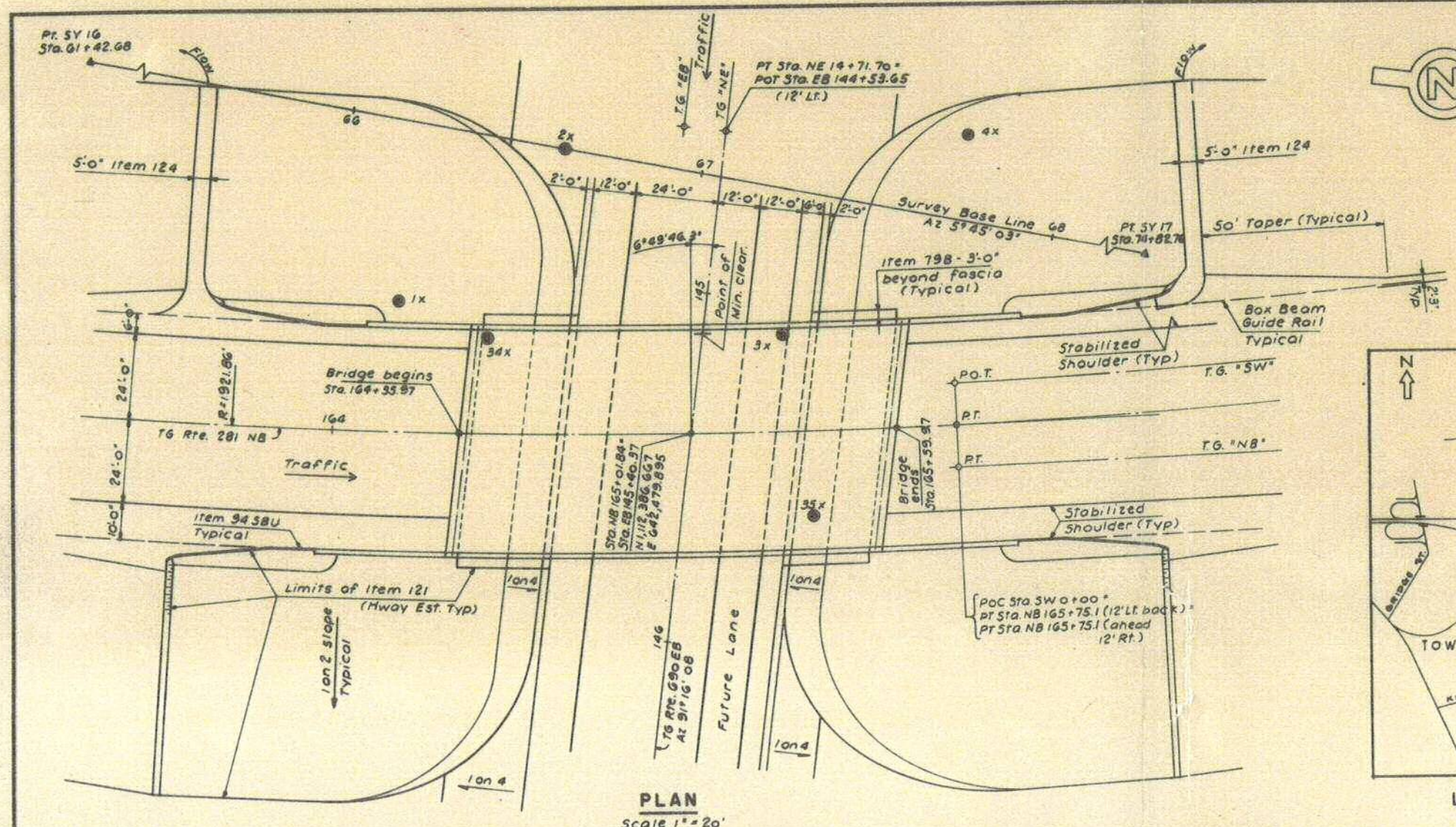

PLAN
Scale 1" = 20'

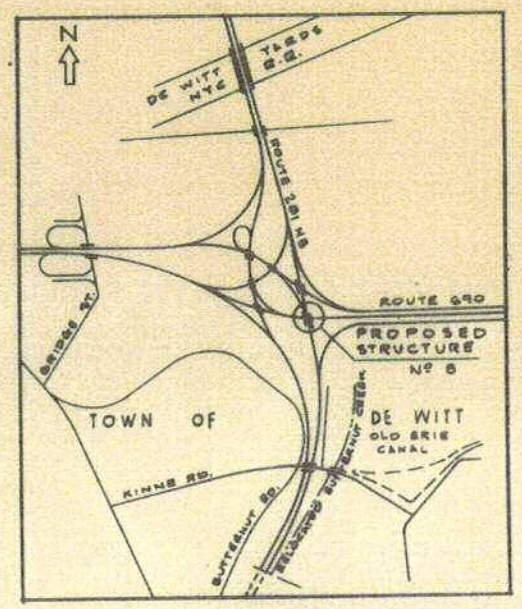

LOCATION PLAN
Scale 1: 24,000

ESTIMATE OF QUANTITIES

ITEM	DESCRIPTION	UNIT	QUANTITIES NEAT	QUANTITIES PROP'L
2EF-B	Selected Granular Fill	C.Y.	1909	1910
2VJ-D	Selected Fill (Bridge Foundation)	C.Y.	6960	6960
2UF	Underdrain Filter	C.Y.	16	20
5B	Structure Excavation	C.Y.	1842	1845
11H-6	Perf Corr. Metal Pipe Underdrain-6"dia.	L.F.	272	275
18	Class A-Concrete for Structures	C.Y.	19	20
18M	Cl A-Conc. for Structures (Mono. Br. Slab)	C.Y.	229	230
20	Class B-Concrete for Structures	C.Y.	846	850
24A	Bagged Screened Aggregate	C.Y.	129	130
28	Bar Reinforcement for Structures	Lb.	101665	101665
29	Structural Steel	Lb.	324140	324140
375(2)	Steel Bridge Rail (2 Railing)	L.F.	393	395
61	Bituminous Material	Gal.	169	170
798	Concrete Block Paving	S.Y.	437	440
83TXS	Temporary Sheet Piling	S.F.	6689	6690
8458	Steel Bearing Test Piles	L.F.	314	315
85	Steel Bearing Piles	L.F.	6751	6755
85A	Splices for Steel Bearing Piles	Ea	29	30
87	Furnishing Equipment For Driving Piles	L.S.	Nec	Nec
945BU	Stone Curb (Bridge Types-Granite)	L.F.	558	560
124	Sodding	S.Y.	93	95
363H	Epoxy Protective Coating for Conc.	S.F.	1257	1260
664LD	Linseed Oil Prot. Coating for Conc.	Gal.	38	40
28B	Stud Shear Connectors	Ea.	2320	2320

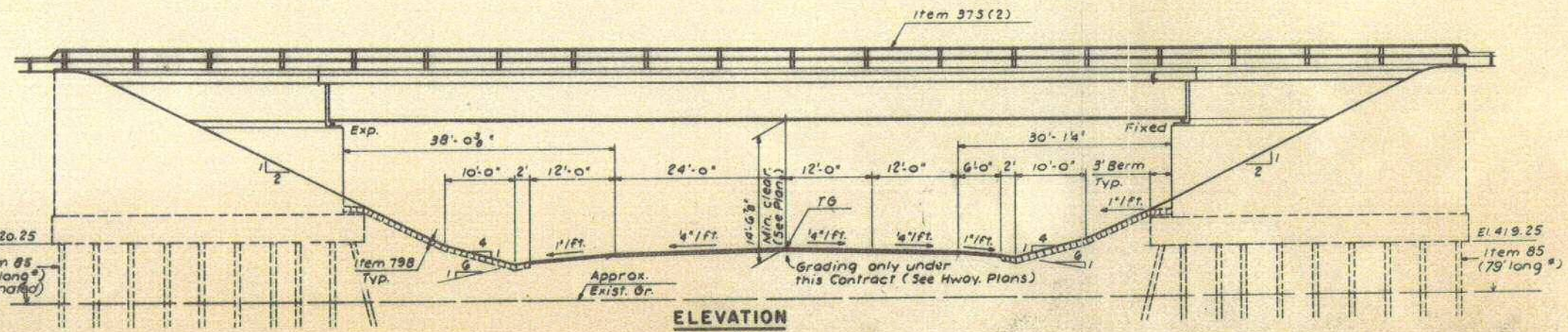

ELEVATION
Scale 1" = 10'

NOTE: Dimensions are normal to ℄ Rte. 690
* Vertical length of piles (Estimated)

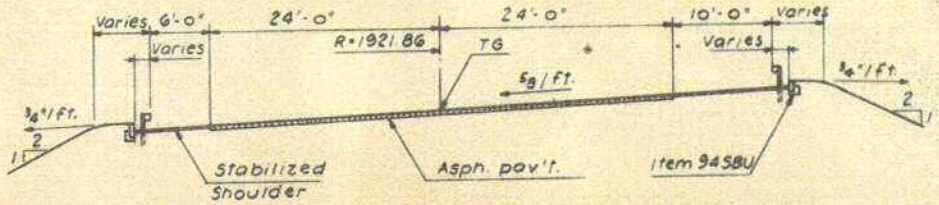

APPROACH SECTION
Scale 1" = 10'

APPROVED
JUL 3 1968
G.T. BURNS
Deputy Chief Engineer (Design)

NOTES:
1. For General Notes see Sheet No. 163 F1
2. For design purposes the pile load does not exceed 56 tons per pile. For estimated length see Elevation.
3. Ordered length of Test Piles:
No. Abutment * 83' (2 piles)

BUTTERNUT INTERCHANGE
F.A.I. 690 & F.A.I. 281
BRIDGE No. 8
I. 281 N.B. over E.B. CONNECTION

1051120

FISH 68-4 FISH 68-5 FISH 68-6P

FED. RD. REG. NO.	STATE	FEDERAL PROJECT AID NO.	SHEET NO.	TOTAL SHEETS
1	NEW YORK		179F	

INTERSTATE ROUTE CONNECTING 570 TO BUTTERNUT INTERCHANGE

FIELD CHANGE SHEET

Sheet 179F voids all of or any part of Sheet 179

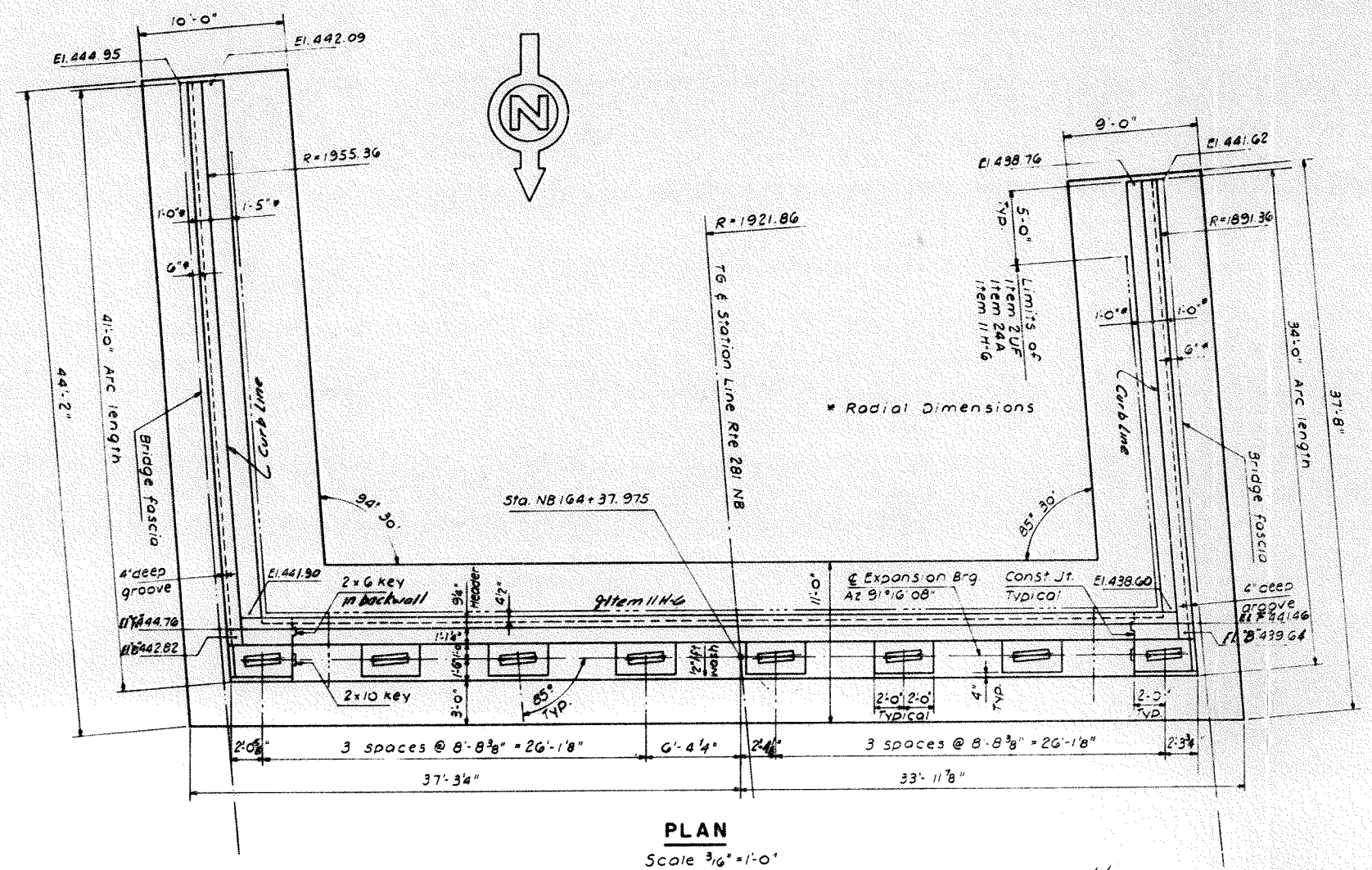

PLAN

Scale 3/16" = 1'-0"

Note: For locations of elevations B, D & F see detail 5 on sheet 183F1

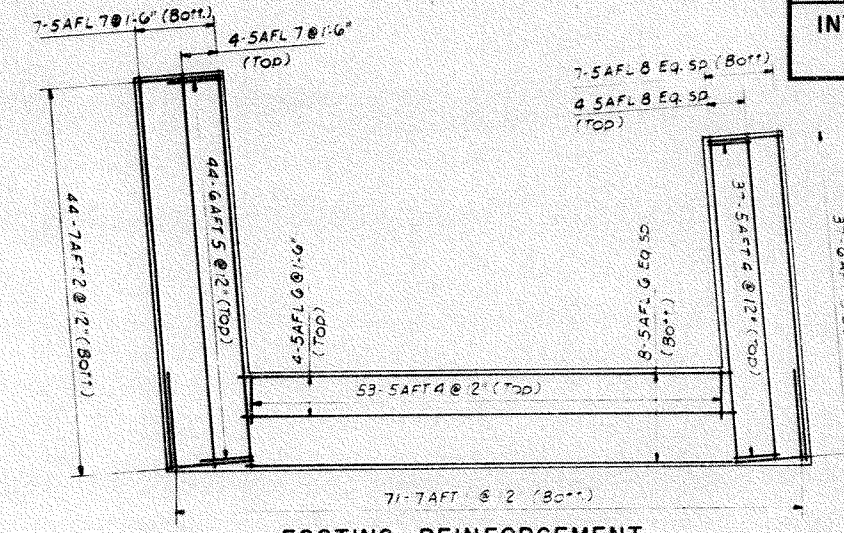

FOOTING - REINFORCEMENT

Scale 3/32" = 1'-0"

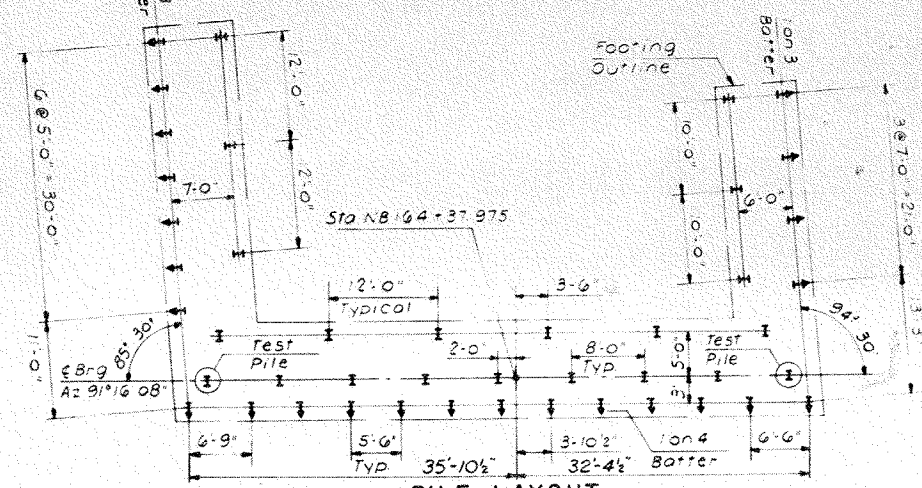

PILE LAYOUT

Scale 3/32" = 1'-0"

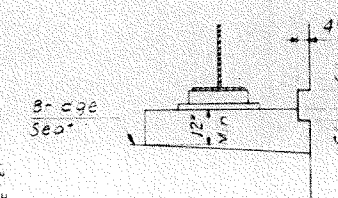

ELEVATION - FASCIA PED.

Scale 3/8" = 1'-0"

NOTES

1. Anchor bolts for bearing shall be 1¼" ø roughened or swedged bolts, 1'-4½" long and set 12" into concrete. Thread top 3".
2. See Sheet 180F1 for Plan of Pedestal Reinforcement.
3. For foundation details see Sheet 178F1
4. For Backwall and Waterstop details see Sheet 185F1
5. For Railing spaces see Sheet 182F1

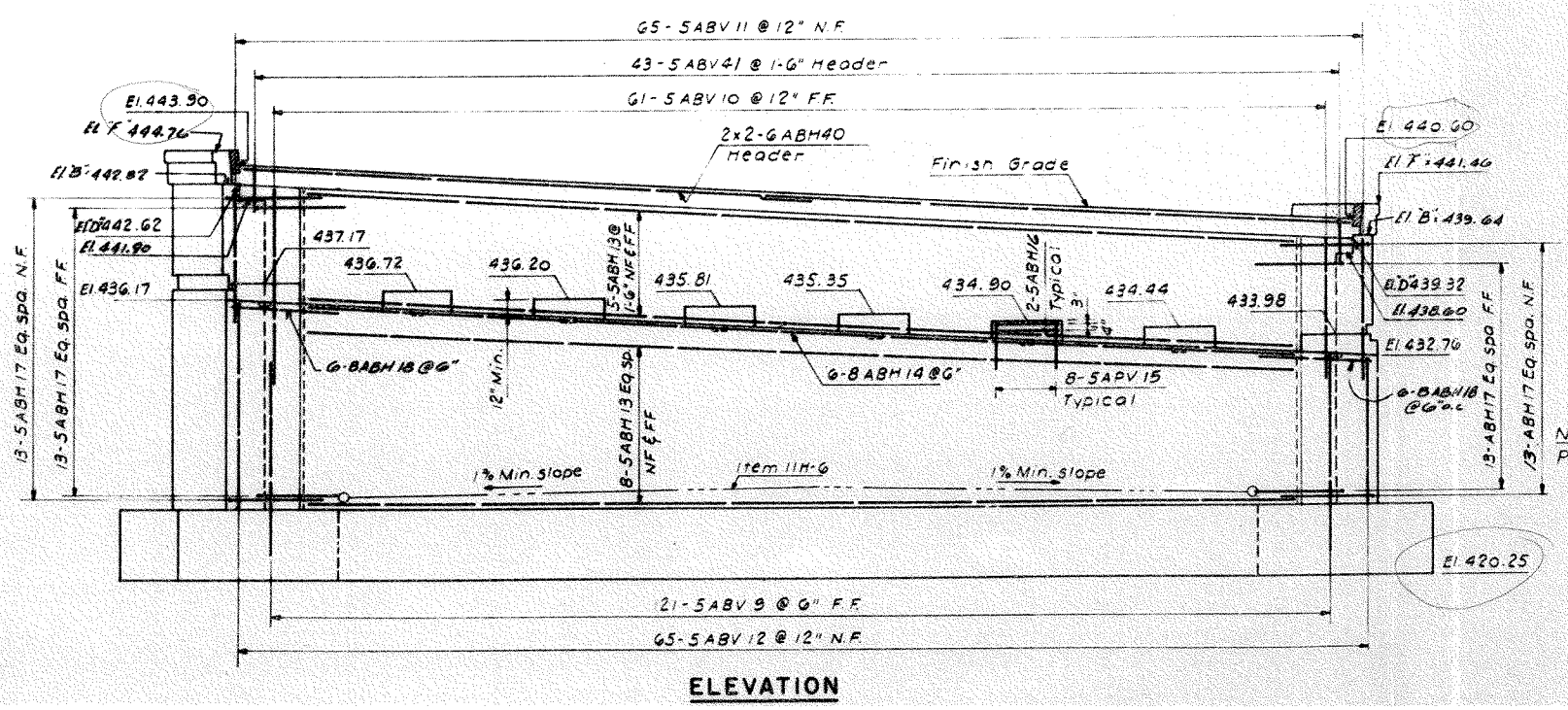

ELEVATION

Note: For locations of elevations B, D & F see detail 5 on sheet 183F1

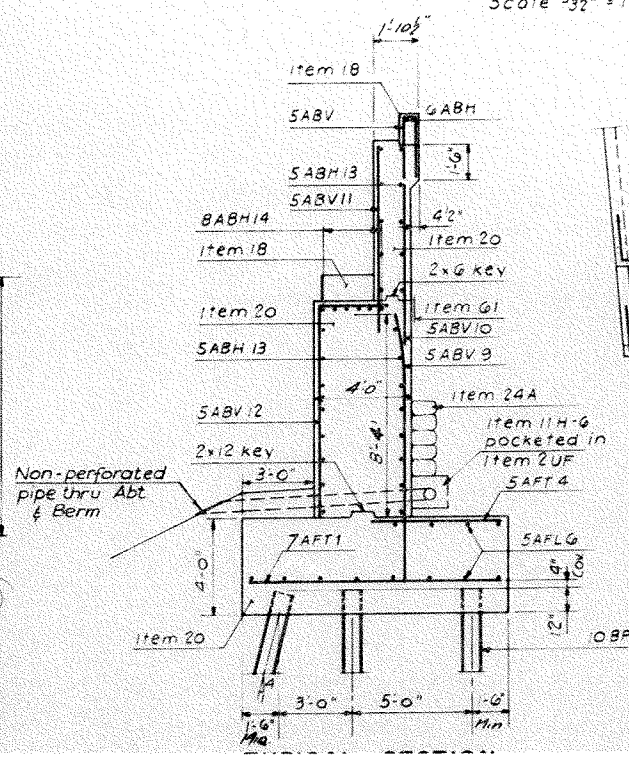

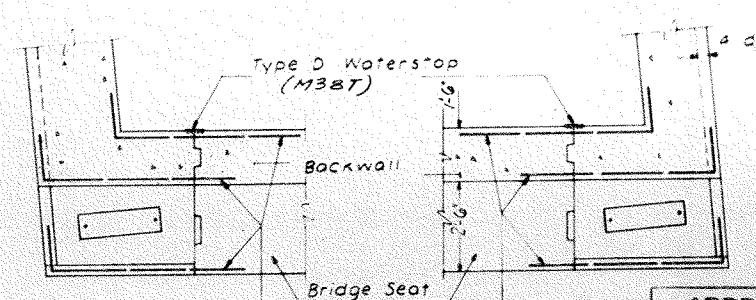

PLAN - FASCIA PEDESTALS

Scale 3/8" = 1'-0"

APPROVED
JUL 3 1968
V. J. BURNS
Deputy Chief Engineer (Design)

BUTTERNUT INTERCHANGE
F.A.I. 690 & F.A.I. 281

BRIDGE No. 8
I. 281 N.B. over E.B. CONNECTION
SOUTH ABUTMENT

DRAWING NO.	SCALE	DATE	SHEET NO.
9093-18	As Shown	June 1968	179 F1

105112

FISH 68-9 FISH 68-5 FISH 68-

FED. RD. REG. NO.	STATE	FEDERAL PROJECT	AID NO.	SHEET NO.	TOTAL SHEETS
1	NEW YORK			180 F1	

INTERSTATE ROUTE CONNECTING 570 TO BUTTERNUT INTERCHANGE

FIELD CHANGE SHEET

Sheet 180 F1 voids all of original Sheet 180

NOTES:
1. Anchor bolts for bearings shall be 1 6" ø roughened or swedged bolts, 1'-4" long and set 12" into concrete. Thread top 3".
2. See Sheet 179 F1 for treatment of Fascia Pedestals
3. For Foundation details see Sheet 178 F1
4. For Backwall and Waterstop details see Sheet 185 F1
5. For Railing spaces see Sheet 182 F1

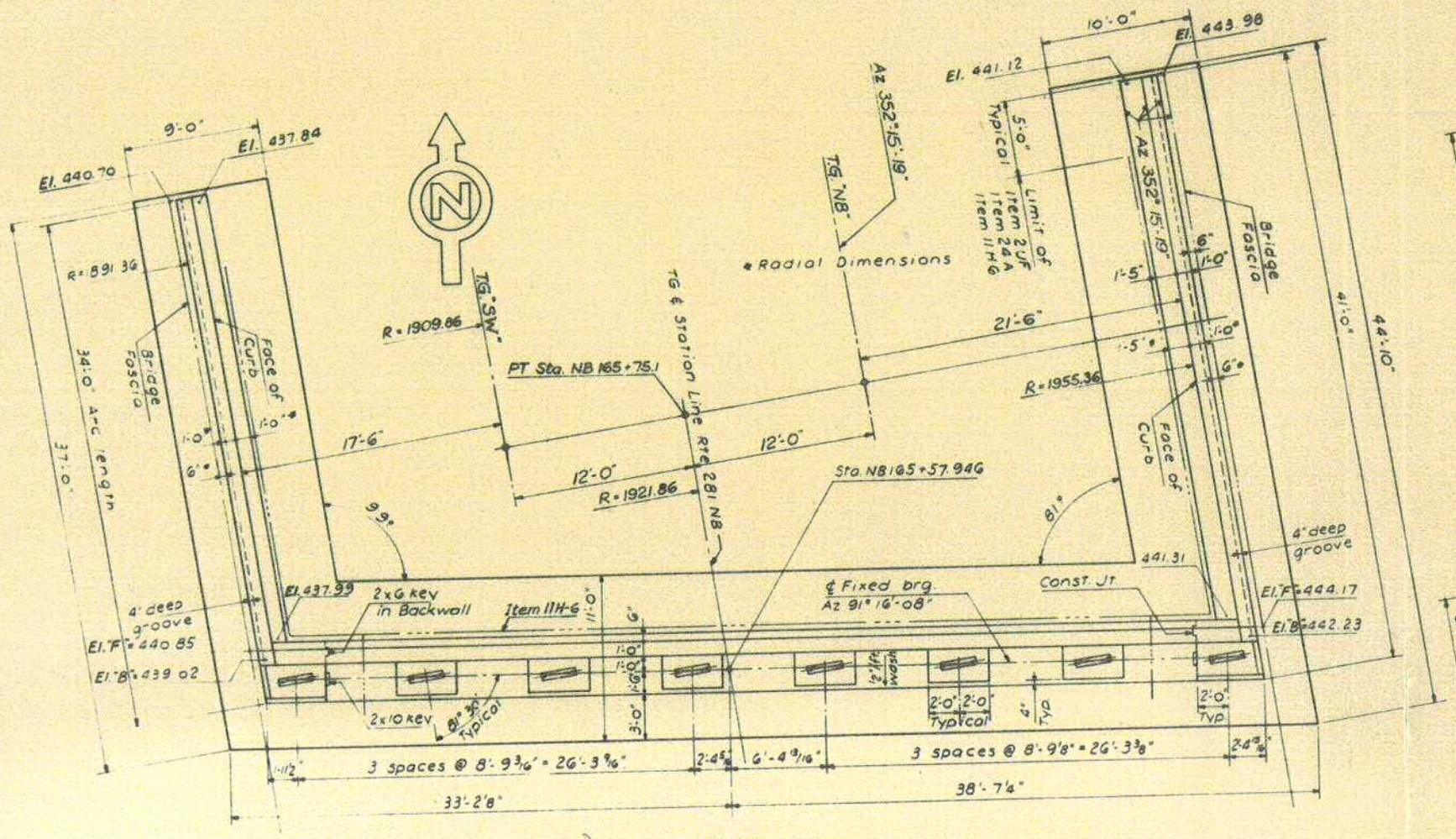

PLAN

Scale 3/16" = 1'-0"

Note: For locations of elevations "B", "D" & "F" see details on Sheet 183 F1

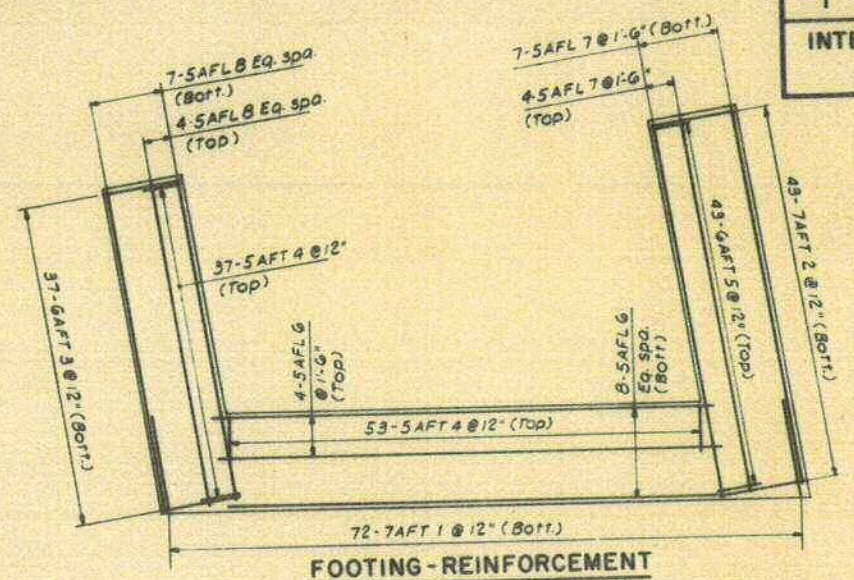

FOOTING - REINFORCEMENT

Scale 3/32" = 1'-0"

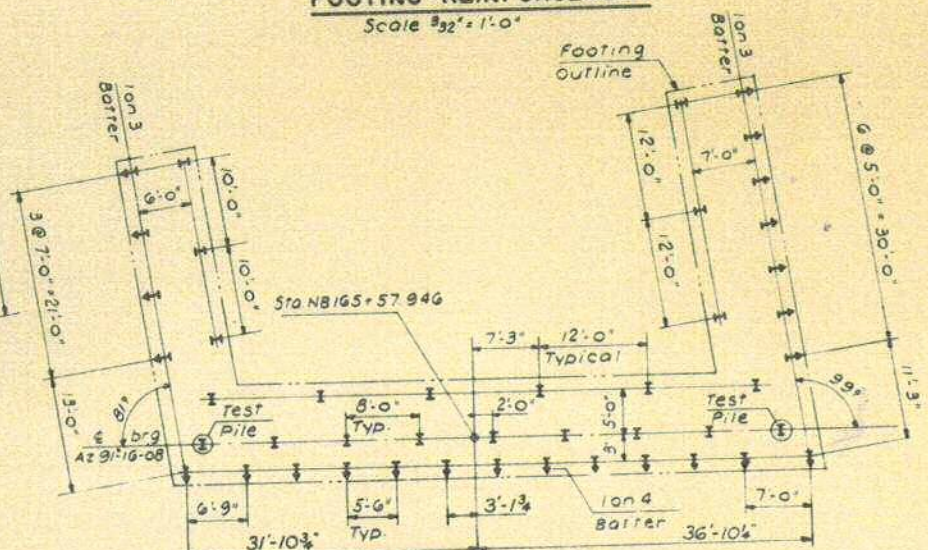

PILE LAYOUT

Scale 3/32" = 1'-0"

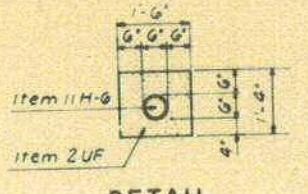

DETAIL

Scale 2" = 1'-0"

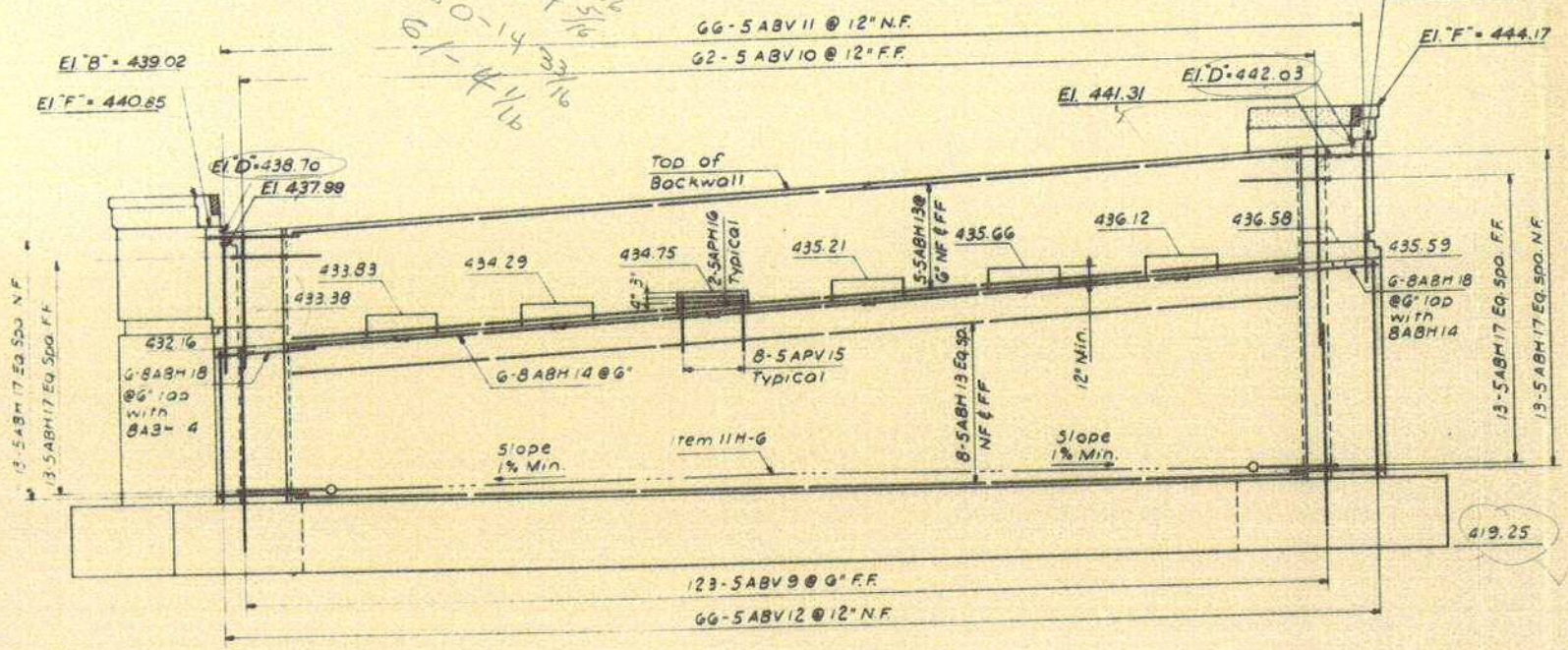

ELEVATION

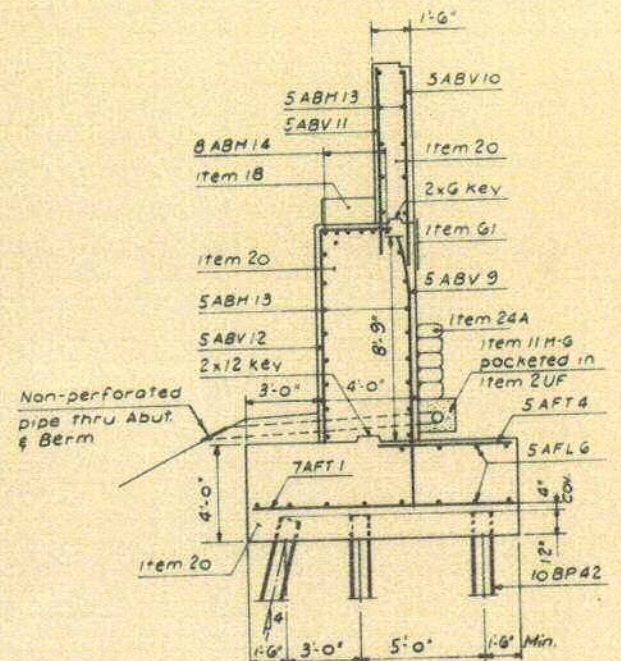

TYPICAL SECTION

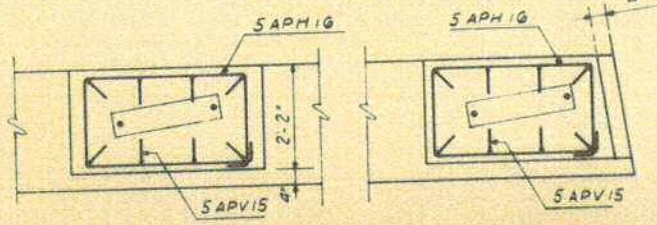

PEDESTAL REINFORCEMENT

Scale 2" = 1'-0"

APPROVED
JUL 3 1968
T. J. BURNS
Deputy Chief Engineer (Design)

BUTTERNUT INTERCHANGE
F.A.I. 690 & F.A.I. 281
BRIDGE No. 8
I. 281 N.B. over E.B. CONNECTION
NORTH ABUTMENT

DRAWING NO.	SCALE	DATE	SHEET
9093-18	As Shown	June 1968	180

Eaton

FISH 68-4 FISH 68-5 FISH 68-6P

FED. RD. REG. NO.	STATE	FEDERAL PROJECT AID NO.	SHEET NO.	TOTAL SHEETS
1	NEW YORK		181 F1	

INTERSTATE ROUTE CONNECTING 570 TO BUTTERNUT INTERCHANGE

FIELD CHANGE SHEET

Sheet 181 F1 voids all of original Sheet 181

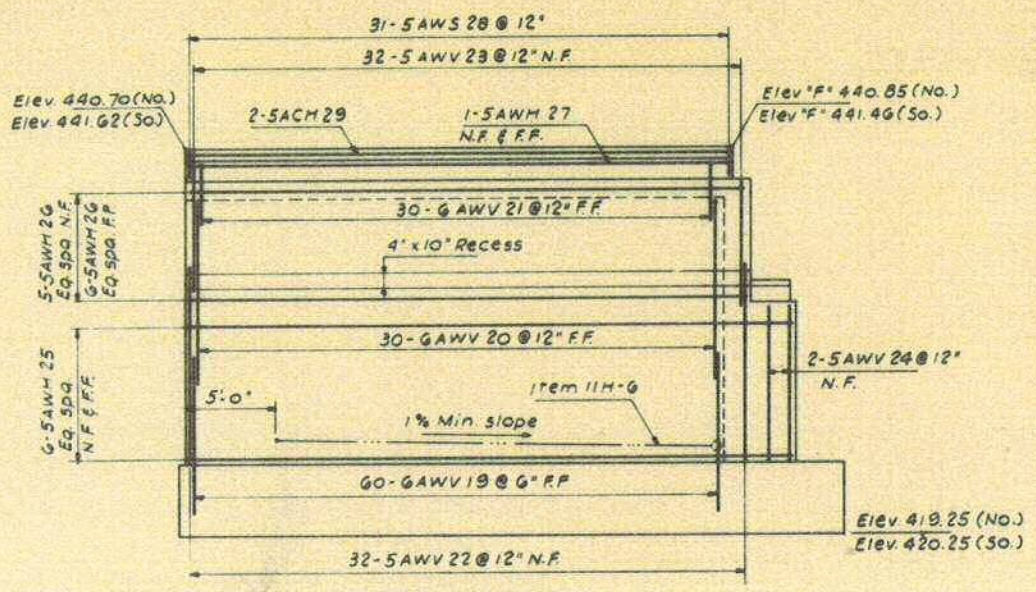

34'-0" LONG WINGWALL

WEST ELEVATION

Scale 3/16" = 1'-0"

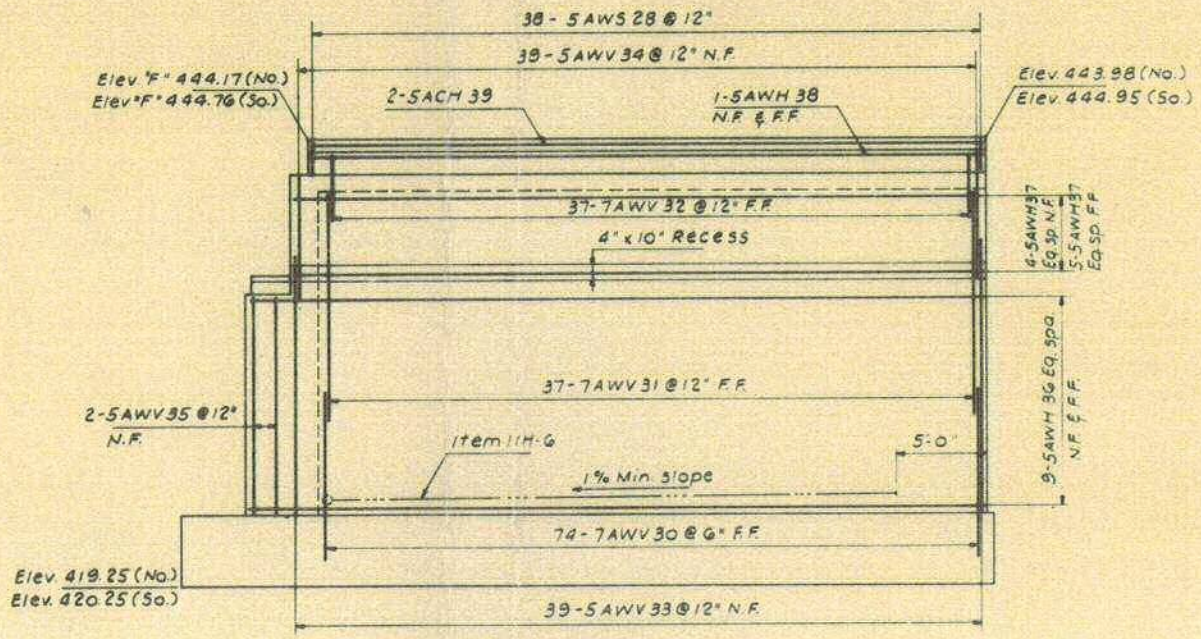

41'-0" LONG WINGWALL

EAST ELEVATION

Scale 3/16" = 1'-0"

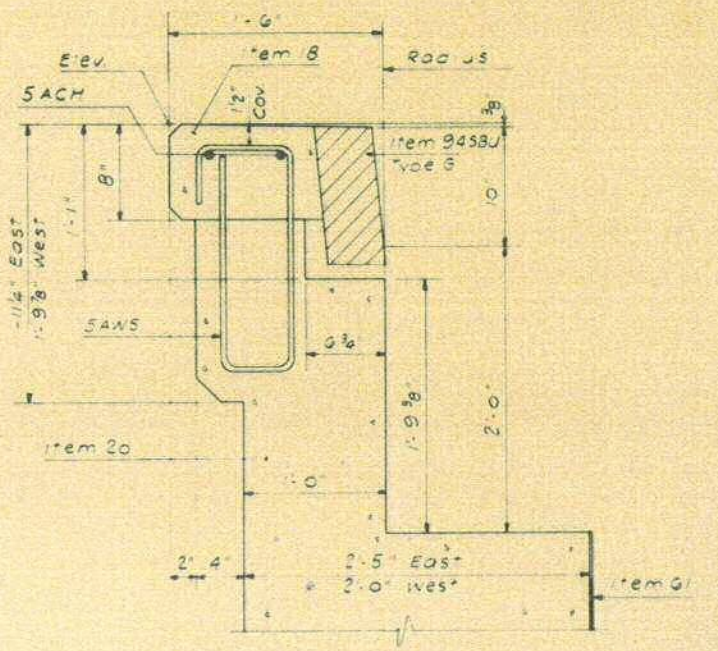

DETAIL

Scale 1" = 1'-0"

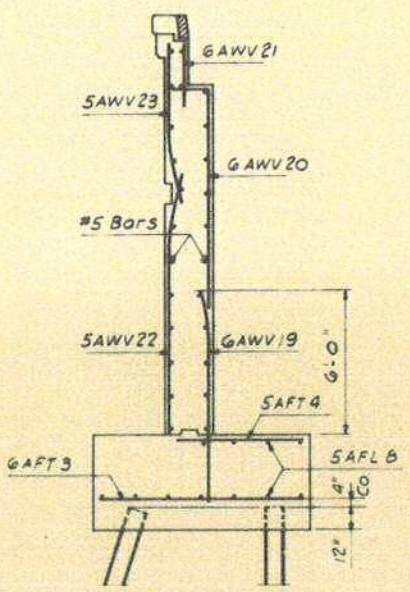

WEST WALL SECTION

Scale 1/4" = 1'-0"

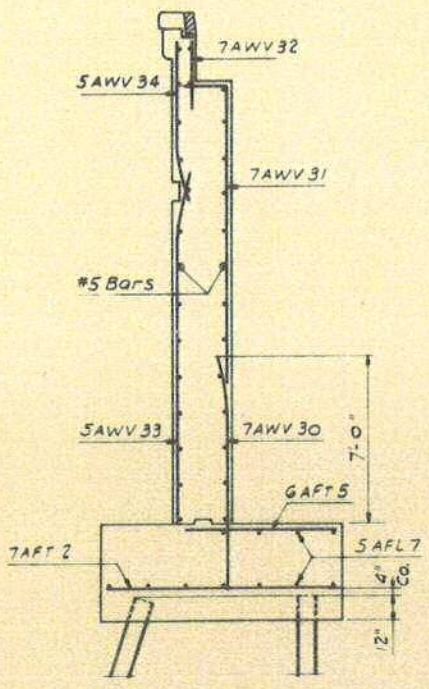

EAST WALL SECTION

Scale 1/4" = 1'-0"

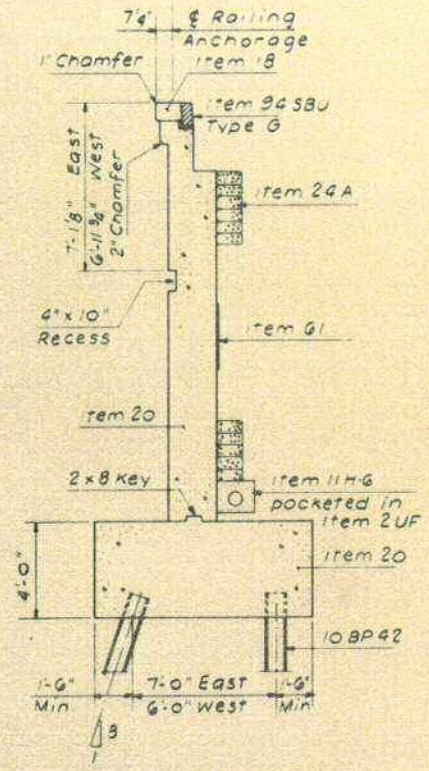

TYPICAL SECTION

Scale 1/4" = 1'-0"

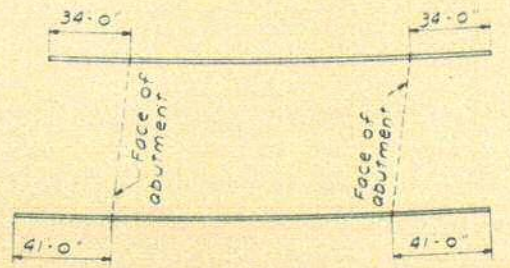

KEY PLAN

Scale 1" = 40'

APPROVED
JUL 3 1968
J. Burns
Deputy Chief Engineer (Design)

BUTTERNUT INTERCHANGE
F.A.I. 690 & F.A.I. 281

BRIDGE No. 8
I. 281 N.B. over E.B. CONNECTION
WINGWALLS

DRAWING NO.	SCALE	DATE	SHEET NO.
9093-18	As Shown	-	181 F1

LOCKWOOD, KESSLER & BARTLETT, INC.

FISH 68-9 FISH 68-5 FISH 68-6P

FED. RD. REG. NO.	STATE	FEDERAL PROJECT AID NO.	SHEET NO.	TOTAL SHEETS
1	NEW YORK		182 FI	

INTERSTATE ROUTE CONNECTING 570 TO BUTTERNUT INTERCHANGE

FIELD CHANGE SHEET

SHEET 182 FI VOIDS ALL OF ORIGINAL SHEET 182

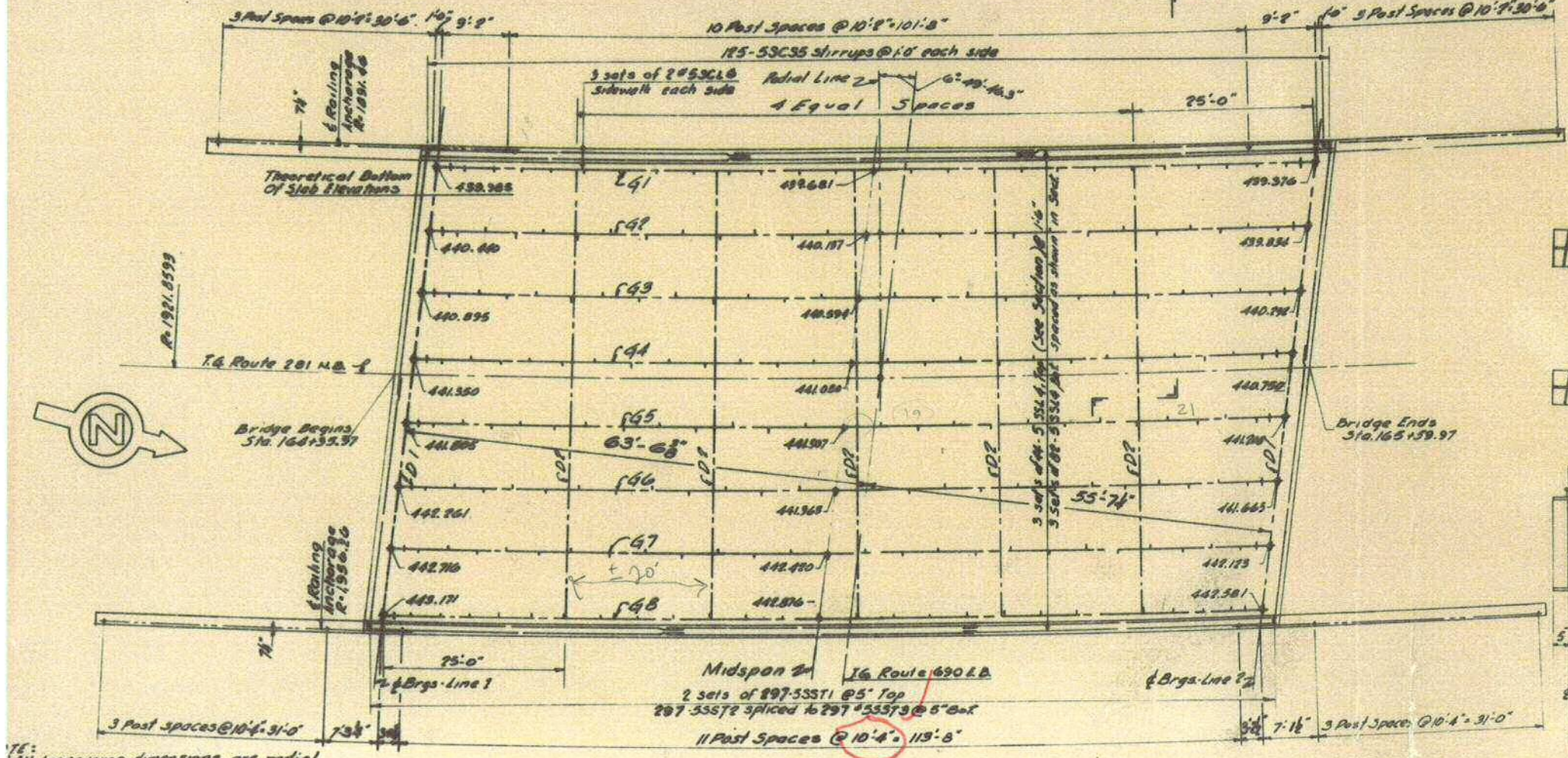

PLAN
Scale: 1" = 10'

NOTE:
1) All transverse dimensions are radial.
2) Lateral dimensions are arc lengths.
3) Intermediate diaphragms are to be placed on radial lines.

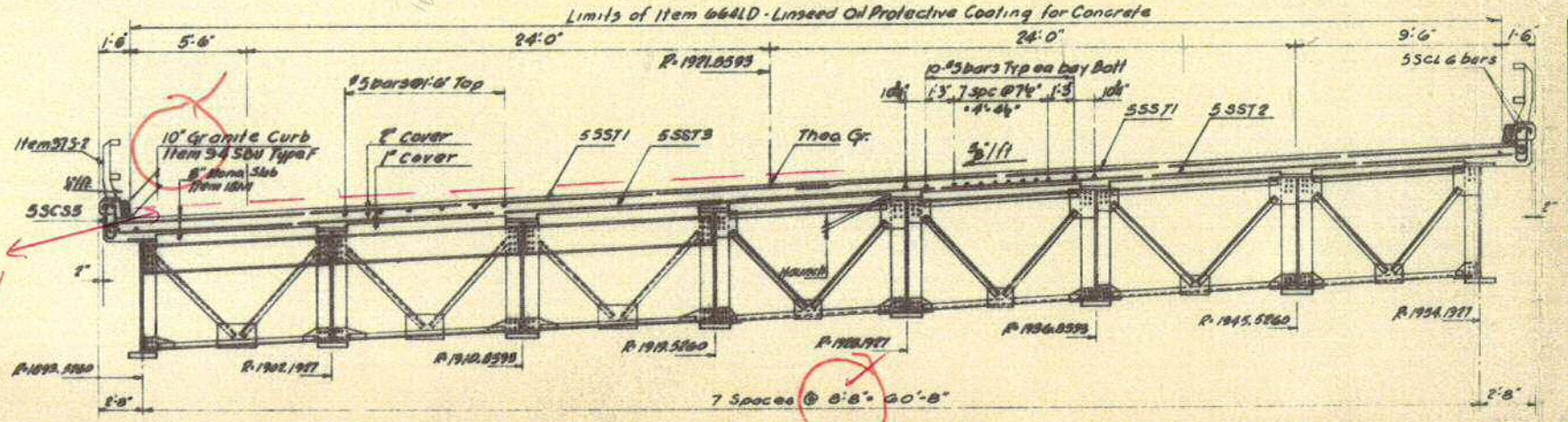

SECTION A-A
Scale: 1/4" = 1'-0"

ADJUSTMENT FOR CAMBER	FASCIA GIRDERS	INTERIOR GIRDERS
SLAB CONCRETE	1 5/8	1 7/8
V.C.	—	—
SUPERIMPOSED DEAD LOAD	1/8	3/8
D.L. STEEL ERECTED	1/8	1/8
TOTAL	2 5/8	2 5/8

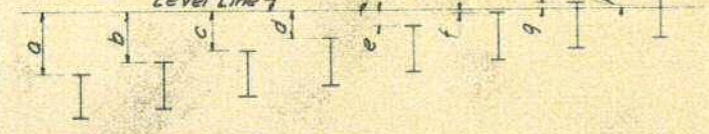

THEORETICAL VERTICAL MEASUREMENTS AT ℄ BEARINGS

BRG. LINE	VERTICAL MEASUREMENTS TO TOP OF STEEL							
	a	b	c	d	e	f	g	h
1	2'-5 1/4"	1'-11 3/4"	1'-6 5/16"	1'-0 3/8"	7 3/8"	1 15/16"	3 9/16"	9"
2	2'-5 5/16"	1'-11 7/8"	1'-6 3/8"	1'-0 3/8"	7 1/8"	1 3/8"	3 3/8"	9 1/8"

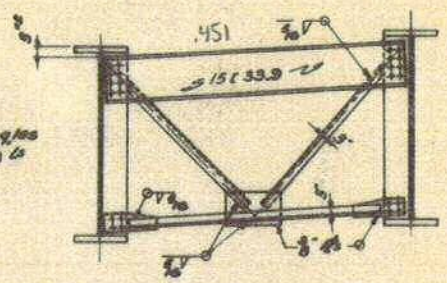

D-1 DIAPHRAGM
Scale 3/8" = 1'-0"

NOTE:
All bracing angles are 3" x 3" x 5/16"

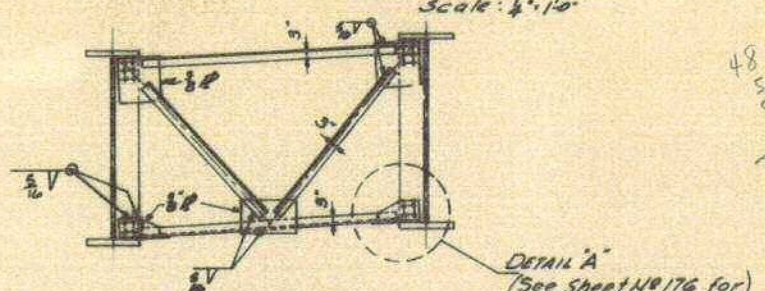

D-2 DIAPHRAGM
Scale 3/8" = 1'-0"

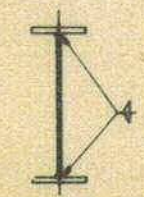

1/2" weld for flange thickness of 7/16"
5/8" weld for flange thickness of 11/16"
3/4" weld for flange thickness of 2"

FLANGE TO WEB WELDS

NOTE
Girders may be curved by cutting the flanges to the required radius or by the process of heat shrinking. Girders curved by heat shrinking after they are assembled shall not have the intermediate stiffeners and connection plates welded to the compression flange until the curving process has been completed.



PLAN - GIRDER G1 (GIRDER G8 SIMILAR)

NOTE
Intermediate web stiffeners to be placed on inside face only

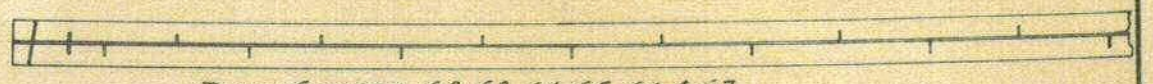

PLAN - GIRDERS G2, G3, G4, G5, G6 & G7

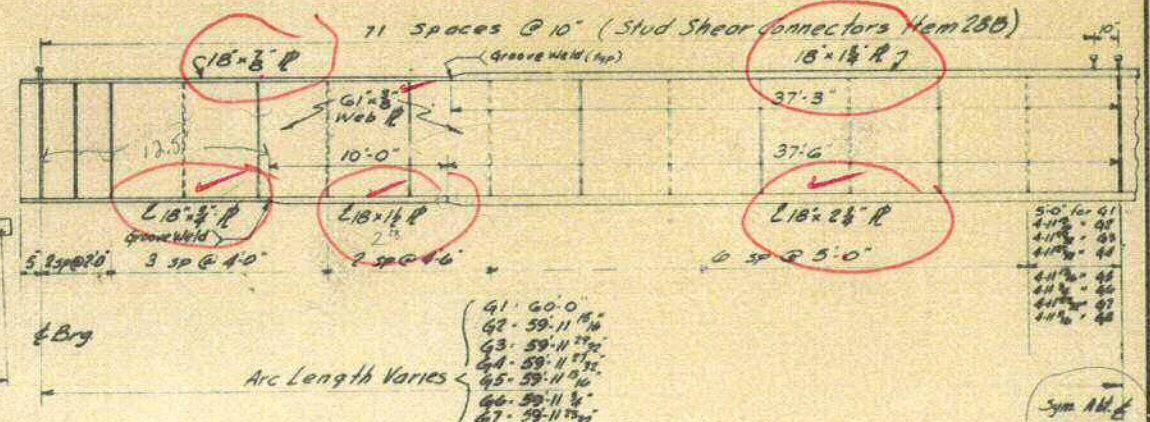

Arc Length Varies
G1 - 60'-0"
G2 - 59'-11 15/16"
G3 - 59'-11 7/8"
G4 - 59'-11 7/8"
G5 - 59'-11 15/16"
G6 - 59'-11 1/16"
G7 - 59'-11 3/16"
G8 - 59'-11 1/16"

Sym. about ℄ of Span

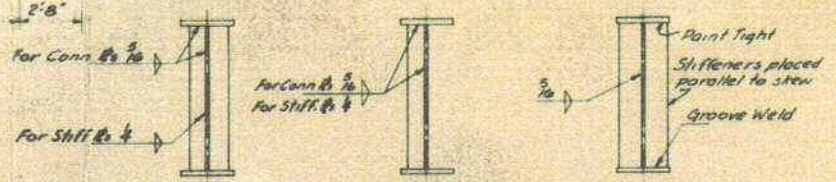

STIFFENERS OR CONNECTION PLATES USED IN PAIRS

STIFFENER OR CONNECTION PLATES USED SINGLY

BEARING STIFFENERS

NOTES
1. All connection plates for diaphragms are 7/16" ℄'s. These plates shall be attached to webs with continuous welds so as to develop their full strength as per specifications of the American Welding Society. Where holes are indicated on the drawings these connections shall be made with 3/4" ℄ rivets or high strength bolts. Holes may be omitted & welding substituted if the Contractor so elects. Amount of welding used shall be equivalent in strength to the rivets or bolts.
2. All bearing stiffeners are 8 1/2" x 3/4" ℄'s.
3. All intermediate stiffeners are 4 1/2" x 5/16" ℄'s.

APPROVED
JUL 3 - 1968
J. BURNS
Deputy Chief Engineer (Design)

BUTTERNUT INTERCHANGE
F.A.I. 690 & F.A.I. 281

BRIDGE No. 8
I. 281 N.B. over E.B. CONNECTION
SUPERSTRUCTURE

DRAWING NO.	SCALE	DATE	SHEET NO.
9093-8	As Shown	June 1968	182 FI

LOCKWOOD, KESSLER & BARTLETT, INC.

BIN: 1051120
I481 NB/ I-690 EB Connection (Future)

BEGIN ABUTMENT DETERIORATION SKETCH

NOT TO SCALE

DATE: 02/24/2014

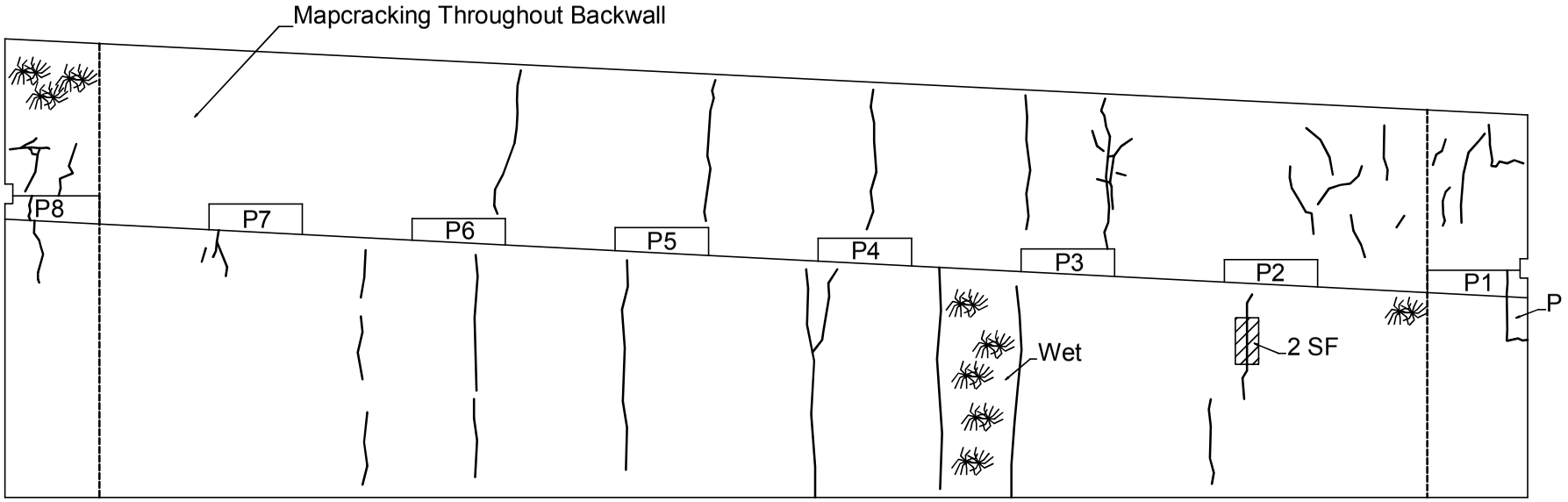

ELEVATION

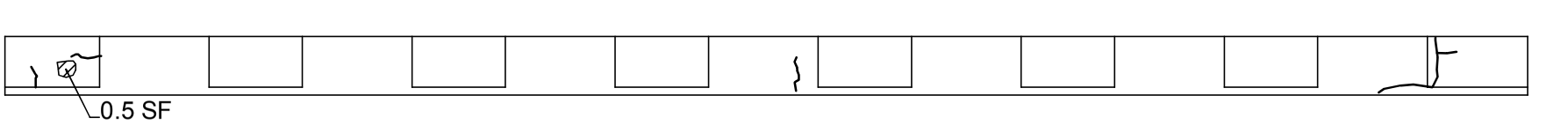

PLAN

LEGEND

Hollow Concrete	P Patch
Mapcracking	Crack

BIN: 1051120
I481 NB/ I-690 EB Connection (Future)

END ABUTMENT DETERIORATION SKETCH

NOT TO SCALE

DATE: 02/24/2014

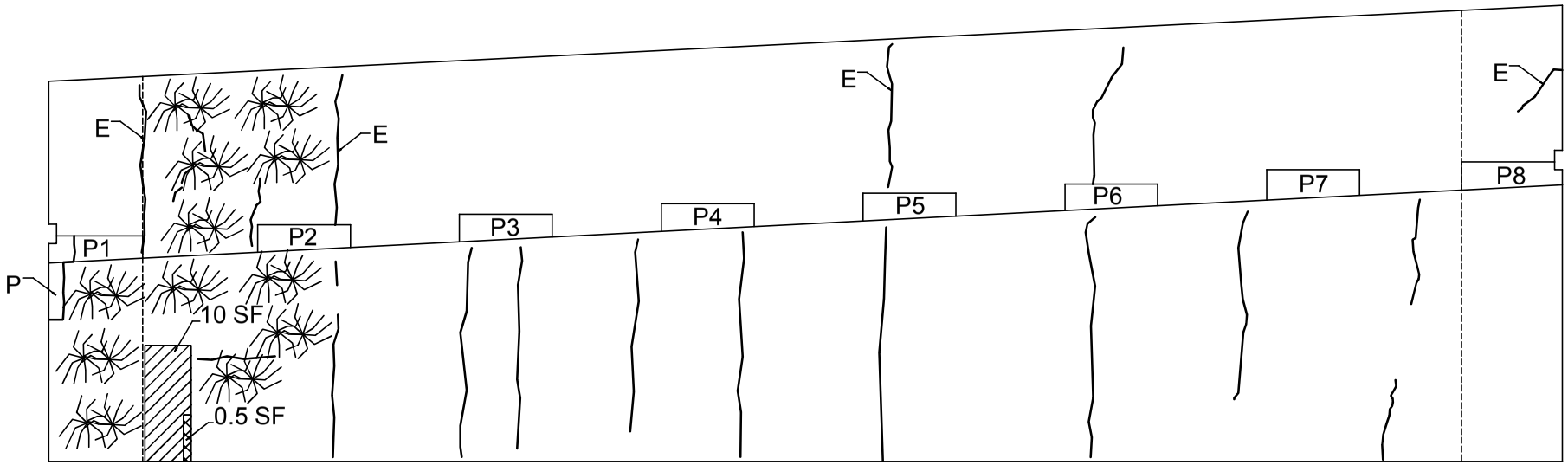

ELEVATION

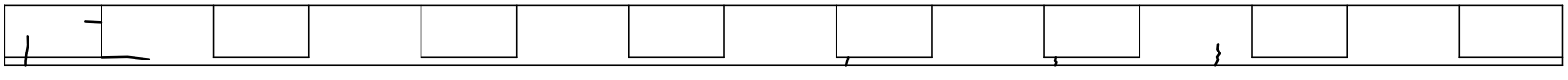

PLAN

LEGEND

Hollow Concrete	P Patch
Mapcracking	Spall
E Efflorescence	Crack

BIN: 1051120
I481 NB / I690 EB Connection (Future)

TOP OF DECK DETERIORATION SKETCH

NOT TO SCALE

DATE: 02/24/2014

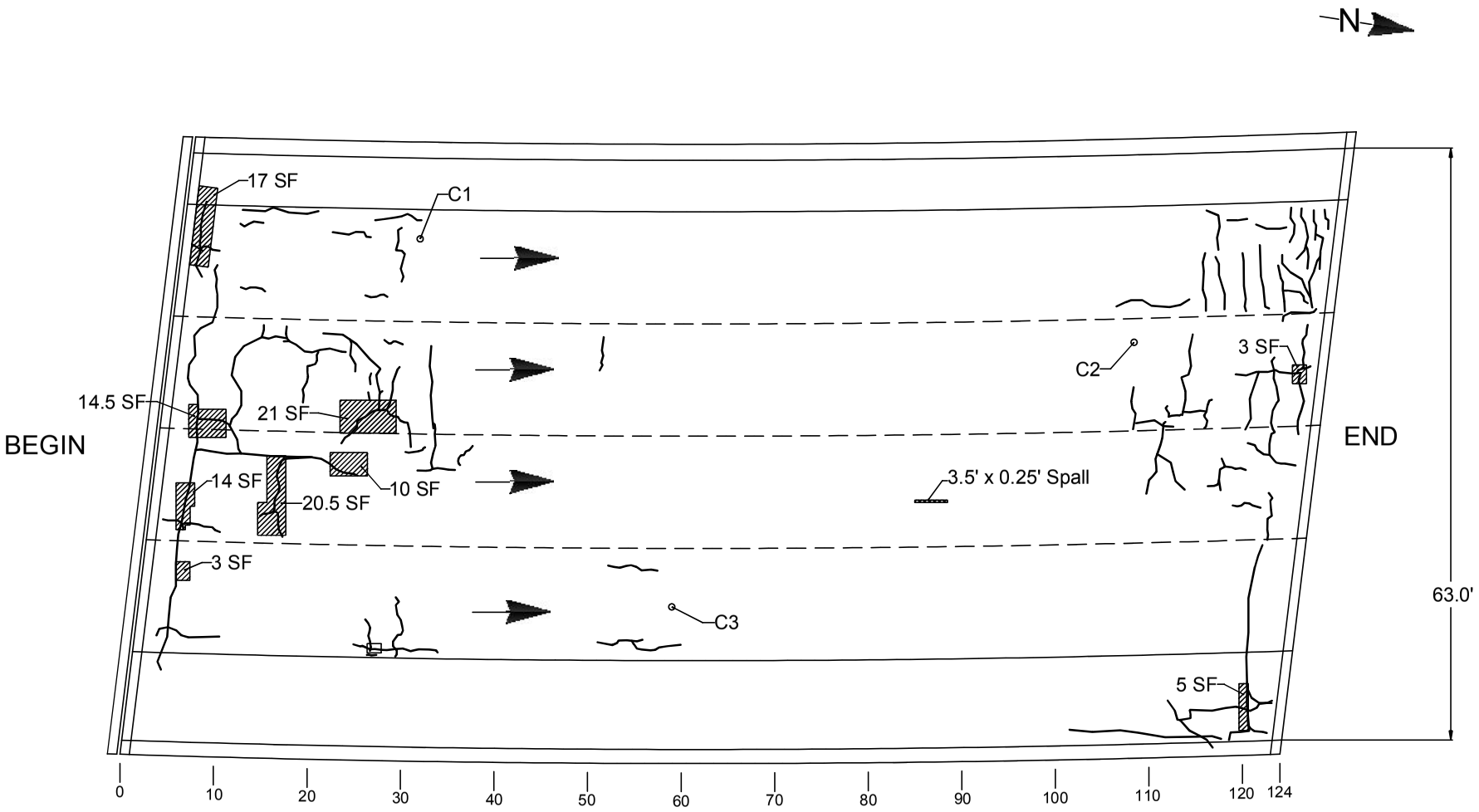

TOTAL DAMAGED AREA EQUALS 108 SF WHICH IS 1.4% OF DECK SURFACE

LEGEND

- Hollow Concrete
- Spalling
- P — Patch
- Core Location
- Crack

IN-DEPTH PHOTO DOCUMENTATION

BIN: 1051120
I481 NB / I690 EB Connection (Future)

IN-DEPTH INSPECTION
PHOTO LOCATION SKETCH

DATE: 02/24/2014

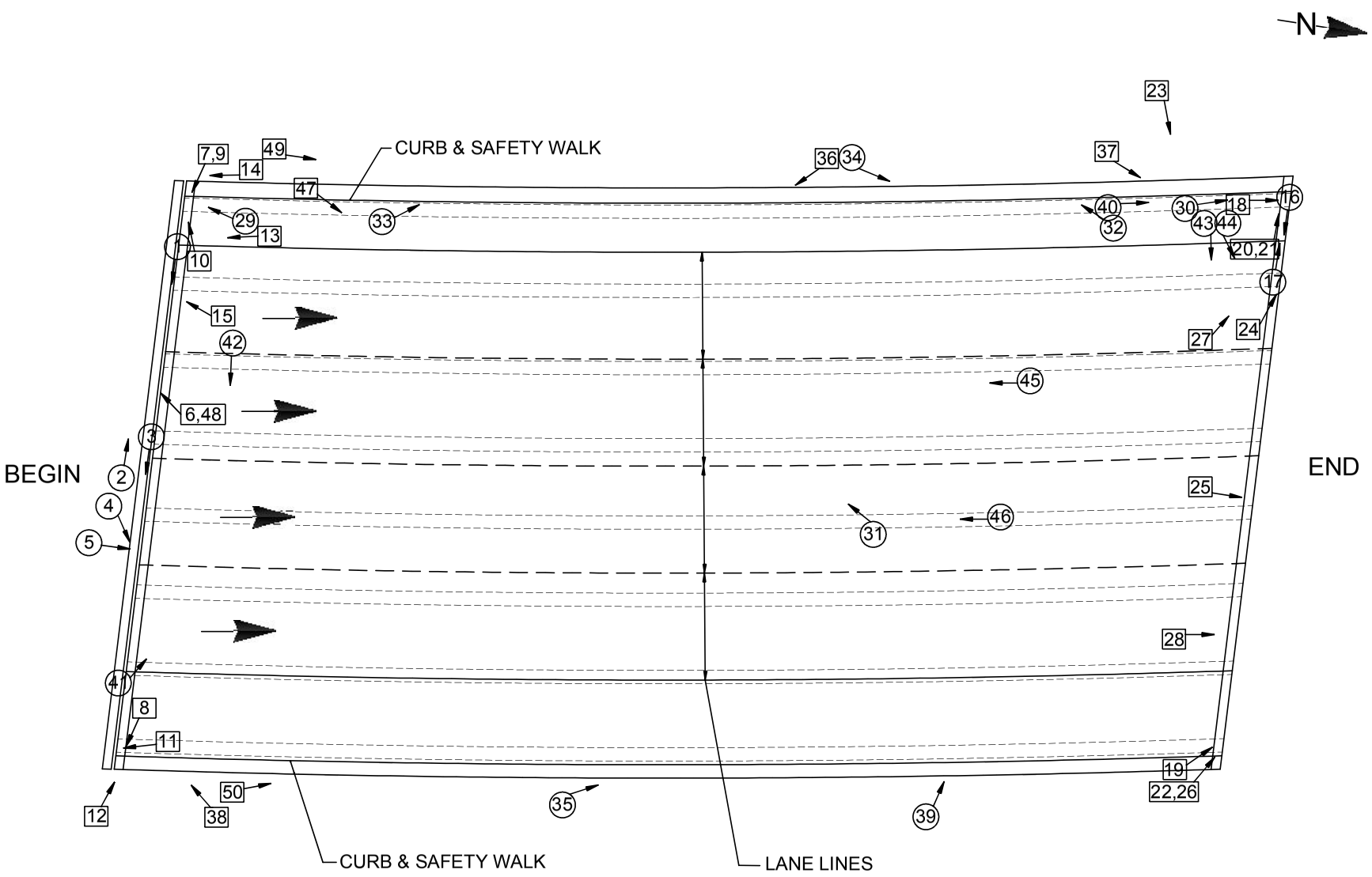

LEGEND

(XX) → Photo Above Deck

[XX] → Photo Below Deck



DESCRIPTION: BEGIN APPROACH JOINT AT LANE 1 – LOOKING FROM LEFT TO RIGHT

PHOTO 1



DESCRIPTION: BEGIN APPROACH JOINT AT LANE 2 – LOOKING FROM RIGHT TO LEFT

PHOTO 2



DESCRIPTION: BEGIN APPROACH JOINT AT LANES 3 & 4 – LOOKING FROM LEFT TO RIGHT

PHOTO 3



DESCRIPTION: BEGIN APPROACH JOINT HEADER AT LANE 3 – LOOKING FROM LEFT TO RIGHT

PHOTO 4



DESCRIPTION: BEGIN APPROACH JOINT HEADER AT LANE 3 – LOOKING FROM BEGIN TO END

PHOTO 5



DESCRIPTION: BEGIN ABUTMENT BACKWALL BAY 3

PHOTO 6



DESCRIPTION: BEGIN ABUTMENT BEARING B1 LEFT SIDE – LOOKING FROM LEFT TO RIGHT

PHOTO 7



DESCRIPTION: BEGIN ABUTMENT BEARING B8 – LOOKING FROM LEFT TO RIGHT

PHOTO 8



DESCRIPTION: BEGIN ABUTMENT BEARING B1 – LOOKING FROM LEFT TO RIGHT

PHOTO 9



DESCRIPTION: BEGIN ABUTMENT SEAT BAY 1 & PEDESTAL P1 RIGHT SIDE – LOOKING FROM RIGHT TO LEFT

PHOTO 10



DESCRIPTION: BEGIN ABUTMENT PEDESTAL P8 FRONT – LOOKING FROM LEFT TO RIGHT

PHOTO 11



DESCRIPTION: BEGIN ABUTMENT PEDESTAL P8 RIGHT SIDE – LOOKING FROM RIGHT TO LEFT

PHOTO 12



DESCRIPTION: BEGIN ABUTMENT BACKWALL BAY 1 – LOOKING FROM END TO BEGIN

PHOTO 13



DESCRIPTION: BEGIN ABUTMENT BACKWALL LEFT – LOOKING FROM END TO BEGIN

PHOTO 14



DESCRIPTION: BEGIN ABUTMENT STEM AT PEDESTAL P2

PHOTO 15



DESCRIPTION: END APPROACH PAVEMENT TRANSITION HEADER – LOOKING FROM LEFT TO RIGHT

PHOTO 16



DESCRIPTION: END APPROACH PAVEMENT TRANSITION HEADER AT END LEFT – LOOKING FROM RIGHT TO LEFT

PHOTO 17



DESCRIPTION: END ABUTMENT BEARING B1 FRONT

PHOTO 18



DESCRIPTION: END ABUTMENT BEARING B8 FRONT – LOOKING FROM LEFT TO RIGHT

PHOTO 19



DESCRIPTION: END ABUTMENT SEAT BAY 1 – LOOKING FROM RIGHT TO LEFT

PHOTO 20



DESCRIPTION: END ABUTMENT PEDESTAL P1 RIGHT – LOOKING FROM RIGHT TO LEFT

PHOTO 21



DESCRIPTION: END ABUTMENT PEDESTAL P8 – RIGHT SIDE

PHOTO 22



DESCRIPTION: END ABUTMENT STEM – LOOKING FROM LEFT TO RIGHT

PHOTO 23



DESCRIPTION: END ABUTMENT BACKWALL BAY 2 – LOOKING FROM RIGHT TO LEFT

PHOTO 24



DESCRIPTION: END ABUTMENT BACKWALL BAY 4 – LOOKING FROM LEFT TO RIGHT

PHOTO 25



DESCRIPTION: END ABUTMENT BACKWALL – RIGHT SIDE

PHOTO 26



DESCRIPTION: END ABUTMENT STEM LEFT SIDE – LOOKING FROM RIGHT TO LEFT

PHOTO 27



DESCRIPTION: END ABUTMENT STEM RIGHT SIDE

PHOTO 28



DESCRIPTION: BEGIN LEFT SHOULDER – LOOKING FROM END TO BEGIN

PHOTO 29



DESCRIPTION: END LEFT SHOULDER – LOOKING FROM BEGIN TO END

PHOTO 30



DESCRIPTION: DECK PAVEMENT MIDDLE LANES LANE 3 AND LANE 2 – LOOKING FROM END TO BEGIN

PHOTO 31



DESCRIPTION: LEFT SAFETY WALK AT 2/3 SPAN – LOOKING FROM END TO BEGIN

PHOTO 32



DESCRIPTION: LEFT SAFETY WALK AT 1/3 SPAN – LOOKING FROM BEGIN TO END

PHOTO 33



DESCRIPTION: LEFT SAFETY WALK NEAR 2/3 SPAN – LOOKING FROM BEGIN TO END

PHOTO 34



DESCRIPTION: RIGHT SAFETY WALK NEAR MIDSPAN – LOOKING FROM BEGIN TO END

PHOTO 35



DESCRIPTION: LEFT FASCIA NEAR MIDSPAN – LOOKING FROM END TO BEGIN

PHOTO 36



DESCRIPTION: LEFT FASCIA NEAR RAILING POST 10 – LOOKING FROM BEGIN TO END

PHOTO 37



DESCRIPTION: RIGHT FASCIA NEAR BEGIN – LOOKING FROM END TO BEGIN

PHOTO 38



DESCRIPTION: RIGHT RAILING AT 2/3 SPAN – LOOKING FROM BEGIN TO END

PHOTO 39



DESCRIPTION: LEFT RAILING NEAR END – LOOKING FROM BEGIN TO END

PHOTO 40



DESCRIPTION: TOP OF DECK BEGIN LANES LANE 4 AND LANE 3 – LOOKING FROM RIGHT TO LEFT

PHOTO 41



DESCRIPTION: TOP OF DECK BEGIN LANE 2 – LOOKING FROM LEFT TO RIGHT

PHOTO 42



DESCRIPTION: TOP OF DECK LANE 1 AT END – LOOKING FROM LEFT TO RIGHT

PHOTO 43



DESCRIPTION: TOP OF DECK LANE 1 AT END – LOOKING FROM LEFT TO RIGHT

PHOTO 44



DESCRIPTION: TOP OF DECK LANE 2 NEAR 2/3 SPAN – LOOKING FROM END TO BEGIN

PHOTO 45



DESCRIPTION: TOP OF DECK LANE 3 NEAR 2/3 SPAN – LOOKING FROM END TO BEGIN

PHOTO 46



DESCRIPTION: FRAMING – LOOKING FROM BEGIN TO END

PHOTO 47



DESCRIPTION: UNDER DECK BAY 3 AT BEGIN

PHOTO 48



DESCRIPTION: GIRDER G1 LEFT SIDE – LOOKING FROM BEGIN TO END

PHOTO 49



DESCRIPTION: GIRDER G8 RIGHT SIDE – LOOKING FROM BEGIN TO END

PHOTO 50

ASBESTOS SAMPLING SURVEY

ATHENICA
ENVIRONMENTAL SERVICES INC.
Tel (718) 784-7490
Fax (718) 784-4085

BULK (NOB) ASBESTOS ANALYSIS BY POLARIZED LIGHT MICROSCOPY AND TRANSMISSION ELECTRON MICROSCOPY

3

CLIENT: NYS DOT, Region 3
LABORATORY ID #: 04-05-232
DATES OF ANALYSIS: 06/03/04

PROJECT: Bin: # 1051120
ANALYT. METHODOLOGIES: ELAP 198.1, ELAP 198.4
DATE OF REPORT: 6/03/04

LABORATORY RESULTS

CLIENT #	LAB. ID #	LOCATION	%ORG	%ASI	%AII	PLM RESULTS	TYPE OF ASBEST.	TEM RESULTS	TYPE OF ASBEST.	POSIT. / NEGAT.
01	04-05-232-01	Steel paint coat G1 @ begin abutment	24.69	17.63	57.68	**ND**	NA	**ND**	NA	**Negat.**
02	04-05-232-02	Steel paint coat G3 @ begin abutment	30.97	5.60	63.43	**ND**	NA	**ND**	NA	**Negat.**
03	04-05-232-03	Steel paint coat G8 @ end abutment	33.76	9.23	57.01	**ND**	NA	**ND**	NA	**Negat.**

E. Sioukri

ANALYST
E. Sioukri

LABORATORY DIRECTOR
Spiro Dongaris

LABORATORY CERTIFICATION NUMBERS: NVLAP 101958, ELAP 10955

- Athenica Environmental Services Inc. (AES), is responsible only for information pertaining to samples taken by its employees.
- Samples will be stored for sixty (60) days. AES Inc., should be notified within this time frame for a true duplicate analysis.
- The report relates only to items tested. This report must not be used to claim product endorsement by NVLAP or any other agency of the U.S. Government. Test reports may not be reproduced except in full and with prior approval of AES Inc.
- The liability of Athenica Environmental Services Inc. with respect to the services charged, shall in no event exceed the amount of the invoice.

ATHENICA
ENVIRONMENTAL SERVICES INC.
45-09 GREENPOINT AVENUE
LONG ISLAND CITY, NY 11104
Tel. (718) 784-7490
Fax. (718) 784-4085

CLIENT: NYS DOT / REG. 3 SITE: BIN # 1051120

PROJECT NO. (ATHENICA FILE#): C003314 DATE: 5/6/~~2003~~ 2004

METHOD OF SHIPMENT: U.S. MAIL INSPECTOR: W.A. Kick

NUMBER OF SAMPLES: 3 TYPE OF ANALYSIS REQUESTED: [ ] PLM [X] NOB-PLM [X] NOB-TEM [ ] OTHERS

TURNAROUND TIME: [ ] 6 HRS [ ] 12 HRS [ ] 24 HRS [X] OTHER HRS

COMMENTS: ATT: CHRISTOPHER ANDERSON
333 E. WASHINGTON ST. SYRACUSE, N.Y. 13202

HOM. AREA	SAMLPLE #	SAMPLE DESCRIPTION	SAMPLE LOCATION	FIELD COMMENTS	LABORATORY RESULTS		
					PLM	PLM-NOB	TEM-NOB
1051120	01	STEEL PAINT COAT	6, @ Begin Abut				
↓	02	"	63 @ " "				
↓	03	"	68 " End Abut				

TRANSMITTAL OF RESULTS:
[X] STANDARD
[ ] TELEPHONE RESULTS TO
[ ] FAX RESULTS TO

TELEPHONE #: (315) 428-4628
FAX #:

BATCH #: 02-05-232

CHAIN OF CUSTODY RECORD

RELINQUISHED BY:	W.A. Kick	DATE:	5/ 1/~~2003~~ 2004	TIME:	10 A.m
RECEIVED BY:		DATE:	5/2/ 2004	TIME:	
ANALYST:		DATE:	6/3/ 2003	TIME:	

LABORATORY ACCREDITATION:
NVLAP# 101958 ELAP# 10955

LATEST BIENNIAL INSPECTION REPORT

Inspection Date: 5/21/2012 RC: 33 BIN: 1051120

Bridge Ratings

Carried: 481I 481I33012058 Crossed: PROPOSED I690 CheckValue: 1,791,583,067

Inspection Agency: 10 - NYSDOT Type of Inspection: 1 - BIENNIAL
GTMS: 302 -- Steel - Stringer/Multi-Beam or Girder
POSTINGS: See Gen Rec Page 1 for Postings at time of inspection.
Further Investigation Needed: No
State Highway Number: 70-7 Milepoint: 6.72 AADT/Yr: 32450 / 2002
Orientation: 1 - North Political Unit: 0233 - Town of DEWITT Year Built: 1971
Total Spans: 1 Ramp Bridge Attached To Span: NA BIN: NA
General Recommendation: 6 Computed Condition Rating: 5.297

Abutment Ratings:	**Beg Abut**	**End Abut**
Joint with Deck	5	8
Bearings, Bolts, Pads	5	5
Seats and Pedestals	5	5
Backwall	5	5
Stem (Breastwall)	5	5
Erosion or Scour	5	5
Footings	9	9
Piles	9	9
Recommendation	5	5

Wingwall Ratings:	**Beg Abut**	**End Abut**
Walls	5	5
Footings	9	9
Erosion or Scour	6	5
Piles	9	9

Channel Ratings:	**Channel**
Stream Alignment	8
Erosion and Scour	8
Waterway Opening	8
Bank Protection	8

Approach Ratings:	**Approaches**
Drainage	5
Embankment	5
Settlement	4
Erosion	6
Pavement	4
Guide Railing	5

Number of Flags Issued:

RED: 0 Yellow: 0 Safety: 0

Vulnerability Reviews Recommended: 1=Yes, 2=No, 3=NA, X=NotActive

Hydraulic: 3	Overload: X	Steel: 2
Collision: 2	Concrete: X	Seismic: X

Inspector's Signature: CheckValue: 1,791,583,067 Date: 5/21/2012

David Hann,PE () (Inspector ID:3000055)

Signed copy of this inspection report is available in the appropriate NYSDOT Regional Office

Reviewed By: Date: 7/3/2012

James R. Manning,PE () (QC ID:3000023)

Signed copy of this inspection report is available in the appropriate NYSDOT Regional Office

Inspection Date: 5/21/2012 RC: 33 BIN: 1051120

Span Ratings

Carried: 481I 481I33012058 Crossed: PROPOSED I690 CheckValue: 1,791,583,067

Deck Element Ratings:	**001**
Wearing Surface	4
Curbs	5
Sidewalks, Fascias	5
Railings, Parapets	5
Scuppers	8
Gratings	8
Median	8
Mono Deck Surface	4

Superstructure Ratings:	**001**
Structural Deck	6
Primary Members	6
Secondary Members	6
Paint	5
Joints	8
Recommendation	6

Pier Ratings:	**001**
Bearings, Bolts, Pads	8
Pedestals	8
Top of Cap or Beam	8
Stem Solid Pier	8
Cap Beam	8
Pier Columns	8
Footings	8
Erosion or Scour	8
Piles	8
Recommendation	8

Utility Ratings:	**001**
Lighting	8
Sign Structure	8
Utilities and Support	8

Field Notes:

Field Date	Arrival	Departure	Temp (C)	Temp (F)	Weather Conditions
5/21/2012	2:00:00 PM	4:00:00 PM		75	Partly cloudy

Inspection Date: 5/21/2012 RC: 33 BIN: 1051120

Inspection Notes

Carried: 481I 481I33012058 Crossed: PROPOSED I690 CheckValue: 1,791,583,067

Note ID: 351210511200001

Beg Abut -- Wingwalls: Walls -- Rated 5, Was 4
End Abut -- Wingwalls: Walls -- Rated 5, Was 4
Referenced Photos: "1", "2"
2012 - The begin and end left U-walls have been patched. The begin and end right U-walls have hairline mapcracking, but still sound and in a 5 condition.

Note ID: 351210511200002

Approaches: Settlement -- Rated 4, Was 6
Approaches: Pavement -- Rated 4, Was 6
Referenced Photos: "3"
2012 - The end pavement has a concrete "pavement joint header" that is spalling on each side. It is breaking up and settled in the 2nd lane from the left approx. 6" round exposing horizontal rebar. The asphalt is spalling on the edge approx. 3" wide.

Note ID: 351210511200003

Approaches: Guide Railing -- Rated 5, Was 4
Referenced Photos: "4"
2012 - The begin right posts have been bent back and re-attached.

Note ID: 351210511200004

Span 001 -- Deck Elements: Wearing Surface -- Rated 4, Was 5
Span 001 -- Deck Elements: Mono Deck Surface -- Rated 4, Was 5
Referenced Photos: "5", "6"
2012 - The wearing surface in general is worn smooth with polished aggregates mainly in the wheel paths. The begin has an 1/8" wide meandering crack in the center to right lanes approx. 4' from the begin joint. The 3rd lane from the left lane has a spall along the construction joint pour line approx. 4' long by 2" wide.

Inspection Date: 5/21/2012 RC: 33 BIN: 1051120

Inspection Photos in Photo Number Order

Carried: 481I 481I33012058 Crossed: PROPOSED I690 CheckValue: 1,791,583,067

Begin Right Wingwall



Photo Number: 1 Photo Filename: 12BegRtWW.jpg

End Left WIngwall



Photo Number: 2 Photo Filename: 12EndLtWW.jpg

Inspection Date: 5/21/2012 RC: 33 BIN: 1051120

Inspection Photos in Photo Number Order

Carried: 481I 481I33012058 Crossed: PROPOSED I690 CheckValue: 1,791,583,067

End Pavement and Settlement, looking from left to right



Photo Number: 3 Photo Filename: 12EndPavt.jpg

Begin Right Guide Rail



Photo Number: 4 Photo Filename: 12BegRtGrail.jpg

Inspection Date: 5/21/2012 RC: 33 BIN: 1051120

Inspection Photos in Photo Number Order

Carried: 481l 481l33012058 Crossed: PROPOSED I690 CheckValue: 1,791,583,067

Wearing Surface and Mono Deck	 Photo Number: 5 Photo Filename: 12WsMono.jpg
Begin Wearing Surface, looking from left to right	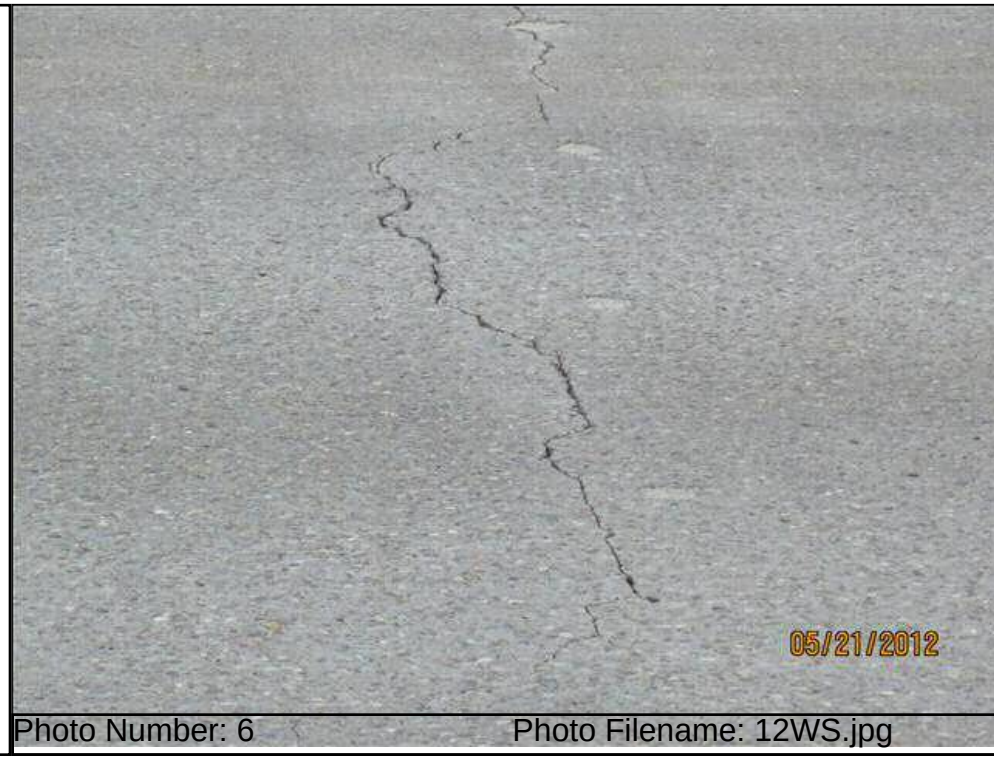 Photo Number: 6 Photo Filename: 12WS.jpg

Inspection Date: 5/21/2012 RC: 33 BIN: 1051120

Inspection Sketches in Sketch SysID Order

Carried: 481I 481I33012058 Crossed: PROPOSED I690 CheckValue: 1,791,583,067

Sketch ID: 351210511200000 Sketch Filename: LdRat.12

General Sketch for Bridge
Referenced Photos:

LOAD RATING FIELD CHECK FORM

Region 3 LoadRatingFieldCheckForm

NYSDOT BRIDGE INSPECTION REPORT			
SHEET	1	OF	1

LOAD RATING FIELD CHECK FORM

BIN:	1051120	Insp. Date:	05/21/2012

Dead Load - Note Changes since Last load Rating or state "NONE":

None

Section Loss - Note locations and amount of loss on each girder or state "NONE":

No changes.

Additional Notes:

None

Attachments:

None

Team Leader: Dave Hann

Inspection Date: 5/21/2012 RC: 33 BIN: 1051120

Inspection Sketches in Sketch SysID Order

Carried: 481I 481I33012058 Crossed: PROPOSED I690 CheckValue: 1,791,583,067

Sketch ID: 351210511200001 Sketch Filename: BD241.12

General Sketch for Bridge
Referenced Photos:

Electrical Survey

BD 241

NYSDOT BRIDGE INSPECTION REPORT
SHEET 1 OF 1

Electrical Hazard Survey

Insp. Date:	05/21/2012		BIN:	1051120

Electrical Hazard Classification (Put an X in appropriate box at right)		
		Danger!
		Warning
	X	No Lines Present

Electrical Hazard Alignments (Put an X in all appropriate boxes at right)		
		Parallel Alignment
		Perpendicular Alignment
		Diagonal Alignment

Utility Name	
System Voltage	

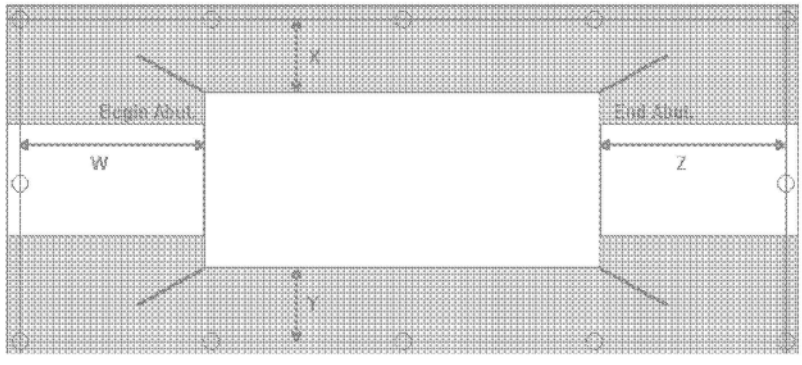

(For Clarity, You Must Specify English or Metric Units for Offsets)

Location (Put X where appropriate)	No Lines Present	Above the Deck	Below the Deck	Above and Below	Horizontal Offset	Vertical Offset
Before Begin Abutment (W)	X					
To Left of Bridge (X)	X					
To Right of Bridge (Y)	X					
After End Abutment (Z)	X					

Inspection Date: 5/21/2012 RC: 33 BIN: 1051120

Gen. Rec., Postings, Federal Ratings, etc.

Carried: 481I 481I33012058 Crossed: PROPOSED I690 CheckValue: 1,791,583,067

Overall Condition:

GENERAL RECOMMENDATION: 6

Computed Condition Rating: 5.297

Problems Requiring Action:

NO Further Investigation Needed

NO Flags Issued

POSTINGS:

Inspector Confirmed existing Posting data as correct.
Posted Vertical Clearance ON the bridge is: No Posting
Posted Vertical Clearance UNDER the bridge is: No Posting
No Load Restriction is posted on this bridge

Overloads Observed:

NO Overload Vehicles were observed on this bridge

FEDERAL RATINGS:

NBI Deck Condition: 6
NBI Superstruct Condition: 7
NBI Substruct Condition: 6
NBI Channel Condition: N
NBI Culvert Condition: N

Diving Inspection Needs:

Diving Inspection Required? No Date of Last Diving Inspection: No Date

Inventory Problems:

Inventory Problems Exist? No

Miscellaneous:

Time Required to Inspect Bridge: 2 Hours

Lane Closure Needs: By State for 1 Hours

No Railroad Flagging Required

No Pedestrian Fence

No Snow Fence

The BIN Plate is in OK condition

Inspection Date: 5/21/2012 RC: 33 BIN: 1051120

Gen. Rec., Postings, Federal Ratings, etc.

Carried: 481I 481I33012058 Crossed: PROPOSED I690 CheckValue: 1,791,583,067

Special Emphasis Inspection Required:

Non-Redundant/Fracture Critical Members - No
Pin and Hangers - No
Fatigue-Prone Welds - Yes
Non-Categorized Fatigue-Prone Details - No
Other (Specified in Text) - No

Special Emphasis Details:

E' welds are not exempt from 100% hands-on inspection due to primary members being curved and analysis cannot be done. Therefore not exemt from henceforth.

General Notes To the Next Inspector:

Bin plate is on the begin stem approx. under ped 3.

Improvements Observed:

Inspection Date: 5/21/2012 RC: 33 BIN: 1051120

Review Progress and Personnel Present at Inspection

Carried: 481I 481I33012058 Crossed: PROPOSED I690 CheckValue: 1,791,583,067

Inspection Submission Status:

Submitted to QC Engineer on: 6/4/2012
QC Submission Number: 553203

QC Review Completed: 7/3/2012
QC Engineer: James R. Manning

Submitted to Liaison Engineer on: 7/11/2012
Liaison Submission Number: 53211

Liaison Review Completed: 9/7/2012
Liaison Engineer: TODD M. HERMANN

Submitted for BIIS Processing on: 9/7/2012
BIIS Submission Number: .kp1

Current Status: Keypunched, Sent to BIIS
Check Value: 1,791,583,067

Personnel Present During Inspection:

David Hann - Team Leader
Steve Grabosky - Assistant Team Leader

Inspection Date: 5/21/2012 RC: 33 BIN: 1051120

Inspection Access Requirements

Carried: 481I 481I33012058 Crossed: PROPOSED I690 CheckValue: 1,791,583,067

Equipment Required for Inspection

No Access Requirement Changes Noted During This Inspection.
This Listing is from the Inventory Database.

ACCESS CATEGORIES FOR ENTIRE BRIDGE
Required: Walking, Step Ladder

ACCESS CATEGORIES FOR SPAN 1
Required: Walking, Step Ladder

Inspection Date: 5/21/2012 RC: 33 BIN: 1051120

Culvert Measurements

Carried: 481I 481I33012058 Crossed: PROPOSED I690 CheckValue: 1,791,583,067

Culvert Measurements

NO CULVERT DATA FOR BIN 1051120

Standard Photos **RC: 33 BIN: 1051120**

Carried: 481I 481I33012058 Crossed: PROPOSED I690

1051120_LOCATION_MAP.JPG

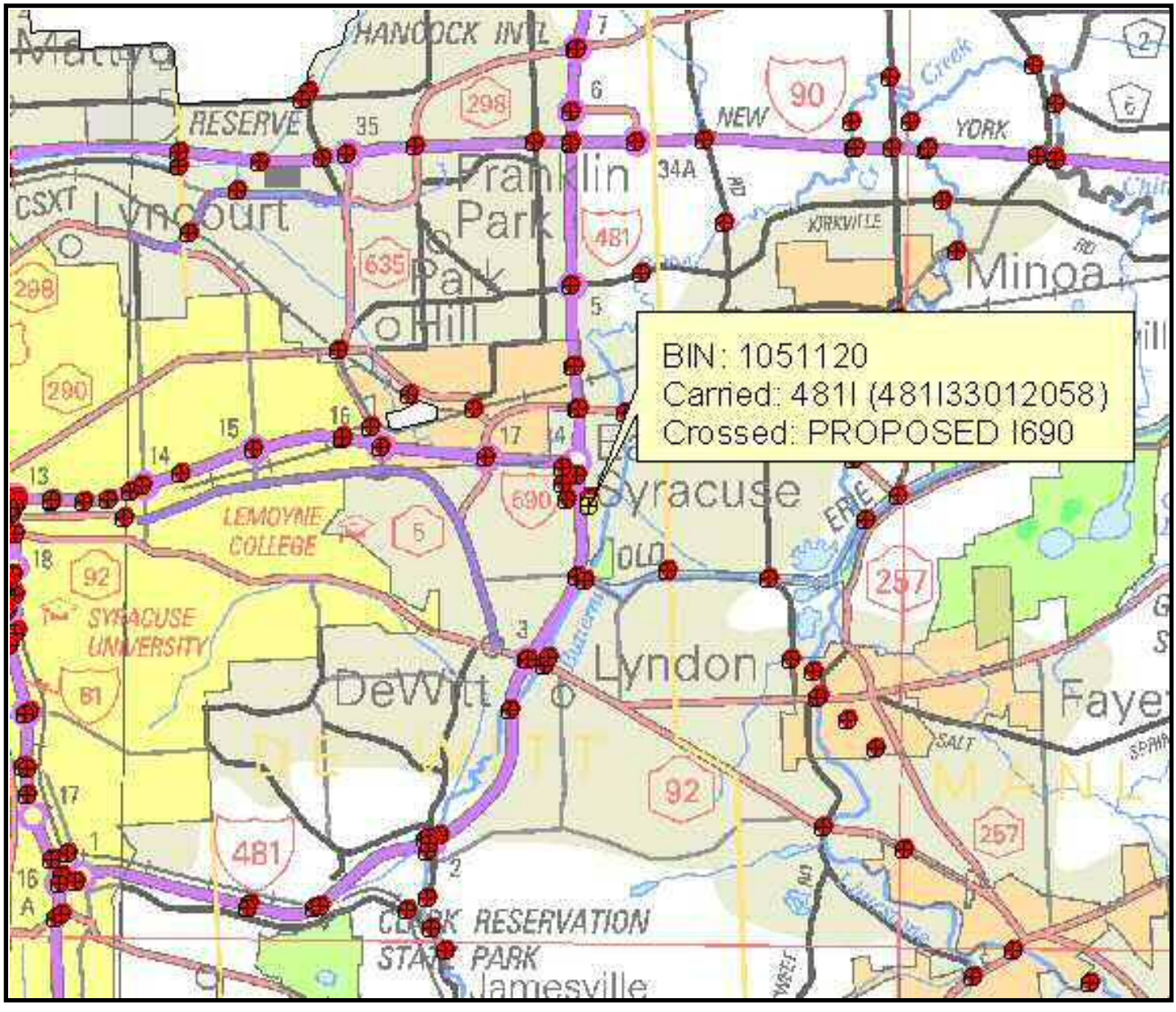

Standard Photos **RC: 33 BIN: 1051120**

Carried: 481I 481I33012058 Crossed: PROPOSED I690

1051120_QUAD_MAP.JPG

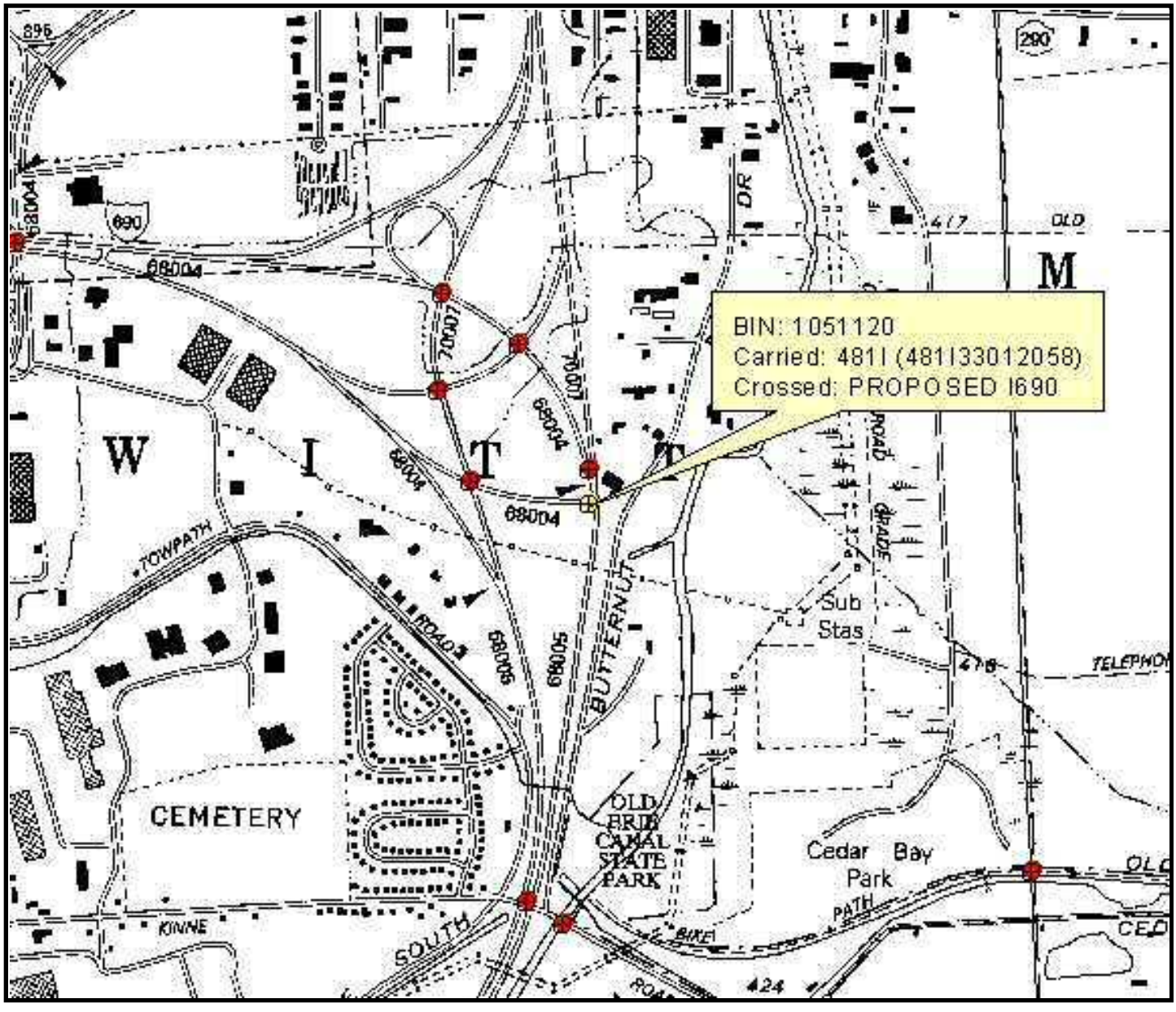

BeginAbutment12.jpg



Standard Photos **RC: 33 BIN: 1051120**

Carried: 481I 481I33012058 Crossed: PROPOSED I690

BeginApproach.12.jpg



Standard Photos **RC: 33 BIN: 1051120**

Carried: 481I 481I33012058 Crossed: PROPOSED I690

EndApproach12.jpg



EndLeftWingwall12.jpg



Standard Photos **RC: 33 BIN: 1051120**

Carried: 481l 481l33012058 Crossed: PROPOSED I690

F2Left12.jpg



Standard Photos **RC: 33 BIN: 1051120**

Carried: 481I 481I33012058 Crossed: PROPOSED I690

F2Right12.jpg



Standard Photos **RC: 33 BIN: 1051120**

Carried: 481I 481I33012058 Crossed: PROPOSED I690

LeftElevation12.jpg



Standard Photos **RC: 33 BIN: 1051120**

Carried: 481I 481I33012058 Crossed: PROPOSED I690

Underside12.jpg



LEVEL 1 LOAD RATING SUMMARY SHEET

Region/County Region 3/Onondaga BIN 1051120
Feature(s) Carried and Crossed I-481 Northbound/ I-690 EB Connection
Date of field inspection upon which Level 1 rating is based 2/24/14

OVERALL BRIDGE RATINGS (BASED ON LOWEST RATED ELEMENTS):

Total number of rating units 1

	H inventory	H operating	HS inventory	HS operating
Rating	H 30.12 (tons)	H 50.20 (tons)	HS 50.76 (tons)	HS 84.60 (tons)
Lowest rated element	Interior Girder G7	Interior Girder G7	Interior Girder G7	Interior Girder G7

Analysis method LFR Comments

Individual Rating Unit Level 1 values:

Rating unit span(s) 1

Main member ratings

	H inventory	H operating	HS inventory	HS operating
Rating	H (tons)	H (tons)	HS (tons)	HS (tons)
Lowest rated element				

Analysis method Comments

Floorbeam ratings

	H inventory	H operating	HS inventory	HS operating
Rating	H (tons)	H (tons)	HS (tons)	HS (tons)
Lowest rated element				

Analysis method Comments

Stringer ratings

	H inventory	H operating	HS inventory	HS operating
Rating	H 30.12 (tons)	H 50.20 (tons)	HS 50.76 (tons)	HS 84.60 (tons)
Lowest rated element	Interior Girder G7	Interior Girder G7	Interior Girder G7	Interior Girder G7

Analysis method LFR Comments

Certified by Date

Quality Control Engineer Signature Date
Agency or Company represented by certifier

Note:
-If connection ratings govern, record them under stringer ratings for stringer – floorbeam connection, floorbeam ratings for floorbeam-main member connections, etc.
-When Level 1 results indicated the need for load posting or other corrective action, the NYSDOT Regional Structures Engineer shall be notified immediately.
-Load ratings should be filed in the regional office within 60 days of completion of calculations.
-Bridges shall be flagged based on Level I results in accordance with the current NYSDOT flagging procedure.
-Bridge load posting, closure, etc. determinations shall be made as results are being produced.

PARSONS

100 Broadway
New York, NY 10005
Phone: 212-266-8300
Fax: 212-571-6825
www.parsons.com

TECHNICAL MEMORANDUM

FROM: Kian Siang Chau, P.E
NYSPE 082744

DATE: MARCH 27, 2014

RE: SEISMIC SCREENING SUMMARY
NEW YORK STATE DEPARTMENT OF TRANSPORTATION
D031085; PIN 3501.60; I-81

BIN: 1051120 (I-481 NB / I-690)

This memorandum summarizes the seismic screening conducted for BIN 1051120 as part of the Interstate 81 Project in Syracuse, NY. The purpose of the screening is to determine if seismic retrofits are warranted at the superstructure to substructure connection, and if further seismic evaluation of the structure is required. This memorandum will give the screening results, retrofits required and recommendations for further seismic evaluation of the structure.

SCREENING PROCEDURE

The seismic screening was performed in accordance with the FHWA Seismic Retrofitting Manual for Highway Structures: Part 1 - Bridges, January 2006. As per the referenced manual, seismic screenings were performed for both lower level and upper level earthquake ground motion. The lower level earthquake ground motion has a reasonable likelihood of occurrence within the life of the bridge (50% probability of exceedance within a 75 year bridge life). The upper level earthquake ground motion has a finite likelihood of occurrence within the life of the bridge (7% probability of exceedance within a 75 year bridge life).

Values for the spectral acceleration for the Syracuse area used in the screening are as follows:

- Lower Level Earthquake Ground Motion for a Short Period (0.2 seconds): $S_S = 0.0251$
- Lower Level Earthquake Ground Motion for a Long Period (1.0 seconds): $S_1 = 0.0076$
- Upper Level Earthquake Ground Motion for a Short Period (0.2 seconds): $S_S = 0.139$
- Upper Level Earthquake Ground Motion for a Long Period (1.0 seconds): $S_1 = 0.047$

These values are considered constant and are the same for all seismic screenings of bridges in the Syracuse area.

The Site Class is based on the soil conditions at the bridge location. It was determined that this parameter has little effect on the results of the seismic screening because the spectral acceleration values for the Syracuse area are small. Based on this, a site class of D was used for all seismic screenings of bridges in the Syracuse area.

Bridge parameters used in the seismic screening were retrieved from the record drawings and WinBolts data.

The seismic screening takes into account the anticipated service life, importance, and the seismic exposure of the bridge to determine a seismic retrofit category (SRC). The SRC is then used to determine seismic evaluation methods and retrofit measures. There are four SRCs, A through D. Seismic retrofit category A is the lowest category; bridges in this category do not require retrofits or further seismic evaluation. Seismic retrofit category D is the highest category; bridges in this category requiring the most rigorous seismic evaluations and retrofits.

SCREENING RESULTS

The SRC for the bridge is "**C**" for lower level earthquake ground motion and "**B**" for upper level earthquake ground motion.

RETROFITS REQUIRED

No seismic retrofits are required for the bridge superstructure to substructure connection.

RECOMMENDATIONS FOR FURTHER SEISMIC EVALUATION

For the lower level earthquake ground motion, it is recommended that capacity/demand ratios for bridge components are calculated as per Section 5.4 of the referenced manual. For the upper level earthquake ground motion, it is recommended that the capacities of the bearings are checked as per Section 5.2 of the referenced manual.

Retrofit cost estimates will be provided after any further required seismic evaluations are completed.

PARSONS

100 Broadway
New York, NY 10005
Phone: 212-266-8300
Fax: 212-571-6825
www.parsons.com

TECHNICAL MEMORANDUM

FROM: Kian Siang Chau, P.E
NYSPE 082744

DATE: JANUARY 26, 2015

RE: FATIGUE EVALUATION
NEW YORK STATE DEPARTMENT OF TRANSPORTATION
D031085; PIN 3501.60; I-81

BIN: 1051120 (I-481 Northbound / I-690 Eastbound Connection)

This memorandum documents a fatigue evaluation conducted for the existing Interstate 81 Viaduct Project. Existing structures with AASHTO Category D, E, and E' fatigue-prone details require 100% hands-on inspection unless proven to be exempt. The purpose of the evaluation is to assess the remaining life of fatigue-prone components.

EVALUATION PROCEDURES

The fatigue evaluation was performed in accordance with the AASHTO Guide Specification for Fatigue Evaluations of Existing Steel Bridges, 1990. Fatigue-prone welds identified in the biennial inspection reports were located on record drawings and confirmed visually in the field. Additional information concerning fatigue-prone welds located in BIN folders was also obtained and reviewed prior to inspection.

EVALUATION RESULTS

The results of the fatigue evaluation of the existing bridge are shown below. The remaining safe fatigue life of the fatigue components has been **exhausted**.

Fatigue Detail Location	Remaining Safe Fatigue Life (Years)	Remaining Mean Fatigue Life (Years)
Interior Girders, Gusset plate welds	-21.51	16.77
Exterior Girders, Gusset plate welds	-28.76	-18.92

BRIDGE DECK EVALUATION REPORT

RECOMMENDATIONS

The bridge deck inspection findings and evaluation are used as a tool for developing the scope of work and cost estimates for the development and comparison of alternatives for the overall project.

The total damaged area of the deck is 1.4% of the total deck surface area. The cores indicate the reinforcement steel is 5 inches to 5.5 inches below the surface of the deck. Additionally, the cores indicate the reinforcement steel is epoxy coated. The core lab tests indicate that chloride ion concentrations at the deck surface are nearly ten times higher than the corrosion threshold for steel; however, they decrease rapidly to only two times the threshold at a depth of 3 inches. The chloride ion penetration profile indicates it is likely that chloride concentrations would be below the threshold at a depth of 4 inches below the surface for most of the deck area.

Due to the age, condition and high chloride ion content of the bridge deck concrete, the bridge deck should be rehabilitated or replaced to meet the current standards and to mitigate excessive future maintenance costs.

ALTERNATIVES

- Rehabilitation Alternative - 2 inches Bonded Concrete Overlay
  - Scope

    The scope of this alternative will include the complete removal of the bridge railings, curb and safety walks, and fascias to the level of the original top of the deck. The lower portion of the fascia or deck soffit is in better condition and only partial removal of damaged areas is necessary. The joint will be removed. The top 2.25 inches of the entire deck will be removed and areas of deteriorated concrete must be removed to at least 1 inch below the level of the reinforcement steel and to the horizontal and vertical limit of any detectable hollow areas. Any corrosion of the reinforcement steel will be sandblasted or hydro-blasted. The proposed deck overlay will be a 2 inches thick bonded concrete overlay yielding a nominal 9.5 inches standard thickness deck. A new single-sloped concrete barrier and a new armorless joint will be installed. The Level 1 Load Rating for the final condition was found to be acceptable.

- Useful Life Expectancy

  The removal of the top 2.25 inches of the existing deck will remove the portion of the deck with the highest chloride ion concentrations. It can be anticipated that chloride ions will continue to migrate into the remaining deck to the reinforcing steel resulting in further corrosion-related deterioration of the deck surface. However, the rate of migration can be significantly reduced with the removal of the top of the deck with the highest chloride ion concentration of chloride ions. Additionally, concrete admixtures will be included in the bonded concrete overlay to impede the continued penetration of chloride into the deck from the surface. This alternative will result in an extended useful life expectancy estimated at 20 years.

The design life of the project is 30 years (ETC + 30). This alternative does not meet the project objectives of obtaining 30 years of service life and is not evaluated further.

- Rehabilitation Alternative - 4 inches Bonded Concrete Overlay
  - Scope

    The scope of this alternative is similar to the 2 inches Bonded Concrete Overlay except the top 4.25 inches of the entire deck will be removed. This additional depth of concrete removal would bring the chloride concentrations of the remaining deck to below the corrosion threshold for steel. Areas of deteriorated concrete will be removed to at least 1 inch below the level of the reinforcement steel and to the horizontal and vertical limit of any detectable hollow areas. Any corrosion of the reinforcement steel will be removed by sandblasting or hydro-blasting. The proposed deck overlay will be a 4 inches thick bonded concrete overlay yielding a nominal 9.5 inches standard thickness deck. A new single-sloped concrete barrier and a new armorless joint will be installed. The Level 1 Load Rating for the final condition was found to be acceptable.
  - Useful Life Expectancy

    A concrete overlay will not completely prevent chlorides from penetrating through the overlay itself and into the structural deck, however, concrete admixtures will be included in the bonded concrete overlay to impede the penetration of chloride into the deck. This alternative will result in an extended useful life expectancy estimated at 30 years.
  - Cost Estimate

    The estimated cost for this alternative is $517,000. The Engineer's Opinion of Probable Construction Cost worksheet is at the end of this section.

- Rehabilitation Alternative – 100% Deep Removal and Partial Deck Reconstruction
  - Scope

    The scope of this alternative will include the complete removal of the bridge railings, curb and safety walks, and fascias to the level of the original top of the deck. The lower portion of the fascia or deck soffit is in better condition and only partial removal of damaged areas is necessary. The joint will be removed. The scope of this alternative will include partial depth reconstruction with removal of the concrete to at least 1 inch below the top mat of the reinforcement steel. Additionally, any further areas of deteriorated concrete detected will require full depth removal. Any corrosion of the reinforcement steel will be removed by sandblasting or hydro-blasting. The proposed deck partial reconstruction will be a 6 inches thick concrete deck yielding a nominal 9.5 inches standard thickness deck. A new single-sloped concrete barrier and a new armorless joint will be installed. The Level 1 Load Rating for the final condition was found to be acceptable.
  - Useful Life Expectancy

    This alternative will provide a useful life expectancy is estimated at 35 years.
  - Cost Estimate

    The estimated cost for this alternative is $653,000. The Engineer's Opinion of Probable Construction Cost worksheet is at the end of this section.

- Replacement Alternative – Cast-In-Place Concrete
  - Scope

    This scope of this alternative will include the complete demolition of the existing bridge deck, railings, curb and safety walks, fascias and bridge joint. The bridge deck will be replaced with a new 9.5 inches standard thickness concrete deck. A new single-sloped concrete barrier and a new armorless joint will be installed. The Level 1 Load Rating for the final condition was found to be acceptable.
  - Useful Life Expectancy

    This alternative will provide a useful life expectancy is estimated at 40+ years.
  - Cost Estimate

    The estimated cost for this alternative is $800,000. The Engineer's Opinion of Probable Construction Cost worksheet is at the end of this section.

- Replacement Alternative – Pre-cast Concrete Deck Panels
  - Scope

    The scope of this alternative is similar to the Cast-In-Place Concrete Deck Replacement Alternative except the deck structure will be precast panels. This alternative offers reduced construction time over conventional construction.
  - Useful Life Expectancy

    This alternative will provide a useful life expectancy is estimated at 40+ years.
  - Cost Estimate

    The comparison of accelerated construction to conventional construction is beyond the current scope of this evaluation.

IN-DEPTH INSPECTION REPORT

D031085 P.I.N. 3501.60

ELEMENT SPECIFIC BRIDGE WORK

B.I.N. 1072530

TEAM LEADER Andrew P. Thompson 84914
NYSPE LICENSE #

ASSISTANT TEAM LEADER Mike Savino

FEATURE CARRIED FROM/TO I90/I481

FEATURE CROSSED I481

DATE FIELD WORK BEGAN 2/3/14

DATE FIELD WORK COMPLETED 2/6/14

TABLE OF CONTENTS

- STRUCTURE IDENTIFICATION
- INTRODUCTION
- PROJECT LOCATION MAP
- IN-DEPTH CONDITION DOCUMENTATION
- PLANS & SKETCHES
- IN-DEPTH PHOTO DOCUMENTATION
- ASBESTOS SAMPLING SURVEY
- LATEST BIENNIAL INSPECTION REPORT

STRUCTURE IDENTIFICATION

a. Bridge Identification Number (BIN): 1072530
b. Reference Marker: 481I 3301 2091
c. Region: NYSDOT Region 3
d. County: Onondaga
e. Town: Dewitt
f. Feature Carried: FROM/TO I90/I481
g. Feature Crossed: I481

INTRODUCTION

a. Bridge History
   i. Year Built: 1985
   ii. Bridge Type: 2 Span Continuous, Steel Multi-girder
   iii. Span 1 Length: 124 feet
   iv. Span 2 Length: 110 feet
   v. Out-to-Out Width: 55 feet
   vi. Structural Ratings and Rankings
      1. Federal Sufficiency: 98 (June 2012)
      2. Condition Rating: 5.792 (June 2012)
      3. General Recommendation: 6
   vii. Live Load Posting (HS25): No
   viii. National Highway System (NHS): Yes
   ix. Previous work Done: Joints replaced, misc. abutment repairs & repave approaches (2006).
   x. Planned Future Work: N/A
b. Highway Classification
   i. Functional Classification: Urban Principle Arterial - Interstate
   ii. Traffic Volumes

YEAR	AADT Projected
2014	6852
2034	10181
2054	15129

   iii. Plan for Maintenance and Protection of Traffic: Maintenance and Protection of traffic will be achieved by staged construction.

PROJECT LOCATION MAP

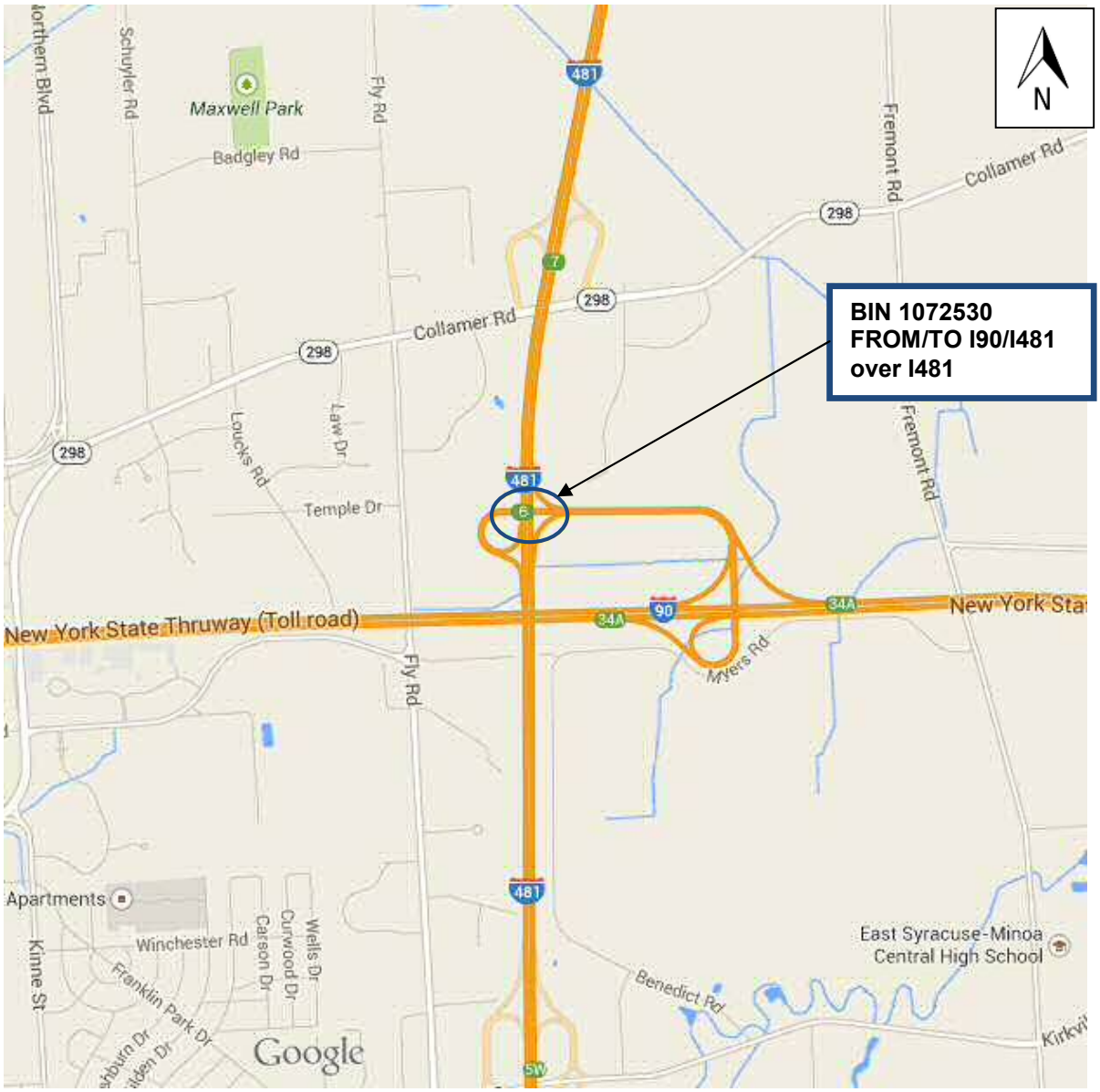

IN-DEPTH CONDITION DOCUMENTATION

NYS DEPT. OF TRANSPORTATION BRIDGE

BIN 1072530

SHEET: 1 OF 4

DATE: 2/6/2014

FEATURE CARRIED: RAMP FROM/TO I90/I481

FEATURE CROSSED: I481

TEAM LEADER: A.THOMPSON

A. TEAM LEADER: M. SAVINO

ITEM	REMARKS	PHOTO N0.
TP 349-22	Begin Abutment - Joint with Deck: The joints are expansion. The joint headers and compression seal are in good condition in the left travelway. The headers in the right travelway have hairline cracking at 2'-3' spacing (Photo 1). A foam seal has been added for most of the right travelway where the compression seal is missing (Photo 1). The foam seal is losing its bond for +/-1.5' near the right. Active leakage was noted under this location and daylight could be seen through the opening (Photos 2 and 3).	1-3
TP 349-23	End Abutment - Joint with Deck: The joints are expansion. The joint headers are in good condition in the left travelway, but the compression seal has lost its bond in the left half (Photo 4). The headers in the right travelway have hairline cracking at 2'-3' spacing (Photo 5). A foam seal has been added for most of the right travelway where the compression seal is missing (Photo 5). The foam seal is losing its bond for +/-2' near the center of the lane. Active leakage was noted below (Photos 6).	4-6
TP 349-25	End Abutment – Bearings: The bearings are expansion sliding plates. The left anchor bolt on Bearing 3 is bent toward the begin (Photo 7). The bearing appears to be functioning properly. The remaining bearings are in good condition.	7
TP 349-27	End Abutment – Seats and Pedestals: No hollow sounding areas were found on the seats or pedestals. There is a 5" dia. x ½" deep spall on the seat at the right (Photo 8). The seat in Bay 3 has a 1/8" wide x +/-3' long crack (Photo 6). The vertical faces of Pedestals 4 and 5 have map cracking (Photo 9). The remainder of the seats and pedestals are in good condition with isolated hairline cracking.	6,8,9
TP 349-29	End Abutment – Backwall: There is an 8" x 3" x 1.5" deep spall with no rebar at the top left (Photo 11), and a 3" dia. x ½" deep spall near the bottom behind Girder 1 (Photo 10). At the top right there is a 6" dia. x 1.5" deep spall with no rebar (Photo 12). The backwall at both ends has hairline cracking with heavy rust and efflorescence staining but no hollow areas. The interior bays have rust staining (Photo 13).	10-13
TP 349-30	Begin Abutment – Stem: The stem has several hollow areas at throughout its length at ground level (Photos 14 and 15). The sum of the hollow areas is 13.0 sf or 6.3% of the stem face. There is an 8' long x 1/16" wide crack at the bottom in Bay 1 with hollowness along the crack (Photo 16). The remainder of the stem face is in good condition with isolated hairline cracking. See Begin Abutment Deterioration Sketch.	14-16

FEATURE CARRIED: RAMP FROM/TO I90/I481
FEATURE CROSSED: I481

TEAM LEADER: A.THOMPSON
A. TEAM LEADER: M. SAVINO

ITEM	REMARKS	PHOTO N0.
TP 349-31	End Abutment – Stem: There is one 4 sf hollow area under Bay 2 (Photo 17). The remaining stem has scattered cracks measuring less than 1/16" in width, some with efflorescence and rust staining (Photo 13 and 18). Many of the cracks are at the edges of previously patched areas.	13,17 18
TP 350-20	Spans 1 and 2 - Deck Elements – Curbs: The 2012 Biennial Inspection Report has the Curbs item rated 4 due to standing water and debris on the bridge and approaches. This report will not rate approach elements or drainage. The curbs are in good condition.	
TP 350-21	Spans 1 and 2 - Deck Elements - Sidewalks and Fascias: Sidewalks: The safety walks are in good condition. Fascias: The left fascia has map cracking throughout both spans (Photo 19) and a 1/16" wide x 20" long crack at the bottom under the last snow fence post in Span 2 (Photo 20). The right fascia has map cracking throughout both spans. There is a 1' x 5" x 2" deep spall in Span 2 at the top of the right fascia under the 4th rail post (Photo 21). The spall does not undermine the anchor plate. There is a 1/16" wide x 1.5' long crack in Span 2 under the 5th last rail post (Photo 22). The next 3 rail posts have cracks below them in the fascia that are similar but less severe.	19-22
TP 350-22	Spans 1 and 2 - Deck Elements – Railings/Parapets Snow fencing is present over the I481 travel lanes and median on both sides of the bridge. The snow fence consists of 16 steel pipe posts located at rail posts, steel pipe rails, and chain link fencing. On the left the bottom pipe rails at Posts 5, 6, and 8 are rusted through and detached on one or both sides (Photo 23 typ.). The bottom rails at several other posts are rusted but intact. On the right the bottom pipe rails at Posts 3, 4, 5, 7, 8, and 10-15 are rusted through and detached on one or both sides (Photo 21 typ.). The bottom rails at several other posts are rusted but intact. The remainder of the snow fencing is in good condition. The bridge railing and posts on both sides are in good condition. There is a single box beam railing with steel posts along the centerline of bridge that divides the two travelways. The first post is twisted and detached from the rail (Photo 24). The 15th post from the end in Span 2 is detached from the rail and deflected toward the begin (Photo 25).	21 23-25

FEATURE CARRIED: RAMP FROM/TO I90/I481
FEATURE CROSSED: I481

TEAM LEADER: A.THOMPSON
A. TEAM LEADER: M. SAVINO

ITEM	REMARKS	PHOTO N0.
TP 350-27	Spans 1 and 2 - Superstructure – Structural Deck: The structural deck is an 8.5" thick concrete mono deck. There are several hollow areas, hairline cracks, and a few patches in the top surface of the deck as illustrated in the Span 1 and Span 2 Deck Deterioration Plans (Photos 4, and 26 – 30). Overall, 0.9% of the deck in Span 1 and 1.2% of the deck area in Span 2 is hollow or patched. The underside of the deck does not have SIP forms and is visible for inspection. The deck has spalling with exposed rebar at the begin left corner of Span 1 and the end right corner of Span 2. The spall at the begin left is 3'-8" long x 9" wide x 3" deep (Photo 31). The spall at the end right is 2.5' long x 7" wide x 6" deep (Photo 32). The remainder of the underside has scattered hairline cracking on the fascias (Photo 33) and isolated hairline cracking in the interior bays (Photo 34). No hollow areas were found on the underside on either span.	4,26-34
TP 350-28	Spans 1 and 2 - Superstructure – Primary Members: The steel girders in both spans are in good condition with no significant section loss (Photo 35 and 36).	35,36
TP 350-30	Spans 1 and 2 - Superstructure – Paint: The girders are made of weathering steel and form a protective coating. The coating is coming off in the form of small to medium sized flakes on the bottom faces of the fascia bottom flanges (Photo 35) and the top faces of the interior bottom flanges (Photo 36). The condition is worse near both abutments (Photos 15 and 16). The remaining steel surfaces have only minor peppering and flaking (Photo 34).	15,16 34-36

NYS DEPT. OF
TRANSPORTATION BRIDGE

BIN 1072530

SHEET: 4 OF 4
DATE: 2/6/2014

FEATURE CARRIED: RAMP FROM/TO I90/I481
FEATURE CROSSED: I481

TEAM LEADER: A.THOMPSON
A. TEAM LEADER: M. SAVINO

ITEM	REMARKS	PHOTO N0.
	Special Emphasis Inspection Required Non-Redundant/Fracture Critical Members - No Pin and Hangers - No Fatigue-Prone Welds - No Non-Categorized Fatigue-Prone Details - No Other - No	

PLANS & SKETCHES

Date - 3-20-86
J Dussing

BIN 1072530

FED. RD. REG. NO.	STATE	FEDERAL AID PROJECT NO.
	NEW YORK	I-481-2(152)

INTERSTATE RTE. 571 EXTENSION (I-481)
COLLAMER INTERCHANGE TO NORTHERN BL
ONONDAGA COUNTY

CAPITAL PROJECT IDENTIFICATION NO.

BC Spalter 6/1/04

BJK 4/18/97

BJC '98
P.J.B 4/98

Spalter 5/27/97

Opn 4/

v Davies & Fuller 4/14/96

4/10/95

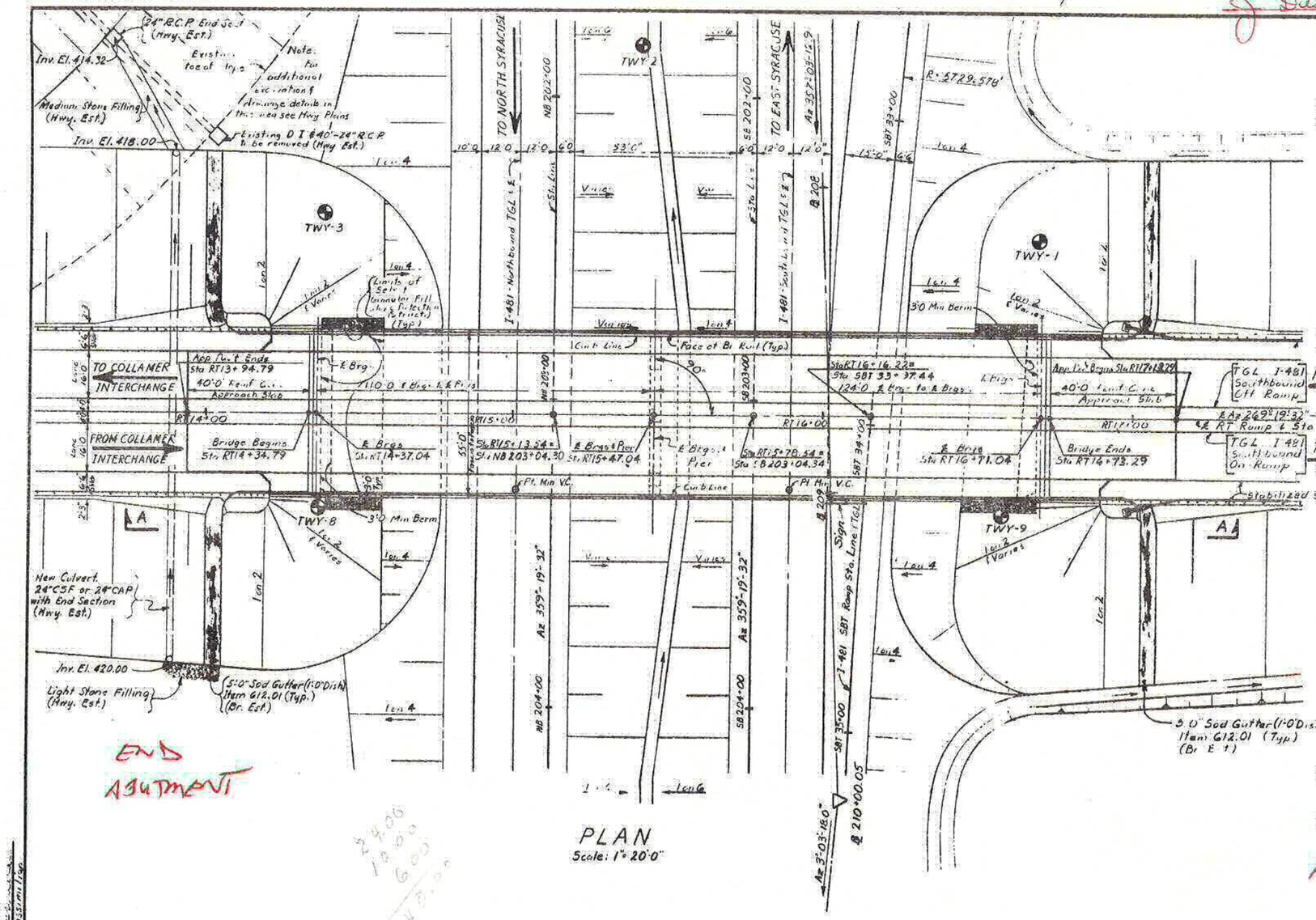

END ABUTMENT

BEGINNING ABUTMENT
v R. English (FC) 4/21/98

PLAN
Scale: 1" = 20'-0"

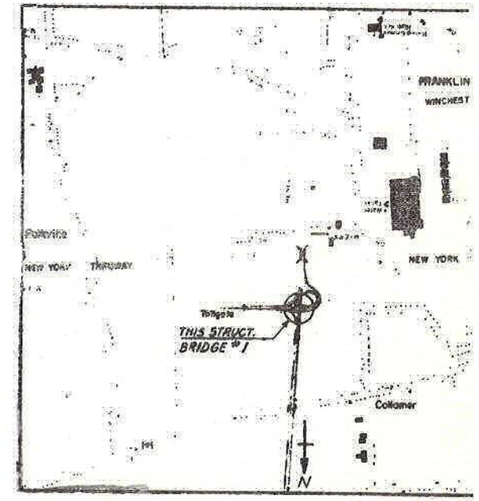

LOCATION MAP
EAST SYRACUSE QUAD.
Scale 1" = 2000'

v Tony Cook 6/8/06
Lumia Fuller 7/1/2008
Bruce Spalter 4/23/2010
P Fuller 6/29/12

CURVE DATA - I 481 SBT RAMP	
Radius	= 5729.578'
Lc	= 697.752'
PC	= Sta SBT 30+95.66
PT	= Sta SBT 7+93.41 = Sta SB 207+00.00 - 24' Lt

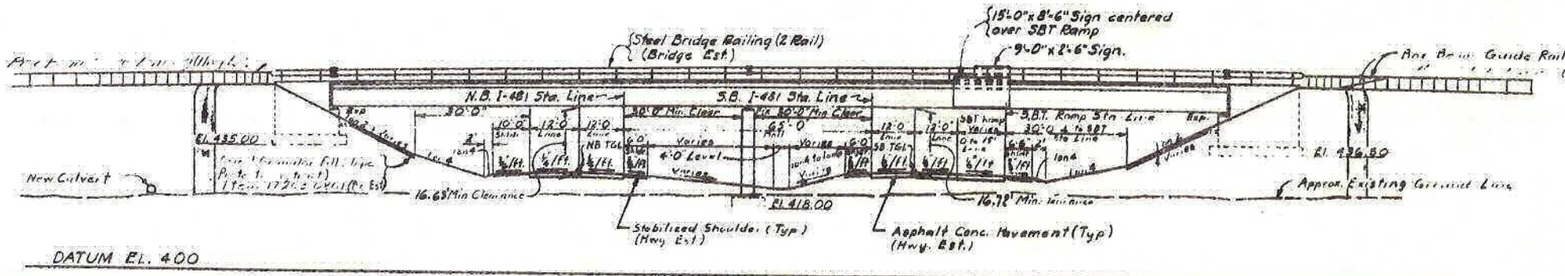

DATUM EL. 400

ELEVATION A-A
Scale: 1" = 20'-0"

PRELIMINARY PLAN RECOMMENDED BY DJ Massmiller

DATE MADE Nov. 1981
PROJECT ENGINEER F. Loeber
IN CHARGE OF D.J. Kay
DESIGNED BY
DESIGN CHECKED BY
DETAILED BY M.W. Kilfoyle
DETAIL CHECKED BY W.E. Schlosser

● - Denote Boring

B.I.N. 1072530

STATE OF NEW YORK
DEPARTMENT OF TRANSPORTATION
DIVISION OF CONSTRUCTION

BRIDGE N[illegible] OVER I-481 EXTE[illegible]

PLAN AND ELEVATION

DETAILED BY [illegible] DETAIL CHECKED BY J. Skowronek

DESIGNED BY [illegible] CHECKED BY [illegible]

FED. RD. REG. NO.	STATE	FEDERAL AID PROJECT NO.	SHEET NO.	TOTAL SHEETS
	NEW YORK	I-481-2(152)	199	31

INTERSTATE RTE. 571 EXTENSION (I-481)
COLLAMER INTERCHANGE TO NORTHERN BLVD.
ONONDAGA COUNTY

CAPITAL PROJECT IDENTIFICATION NO. 3107.20

D250098

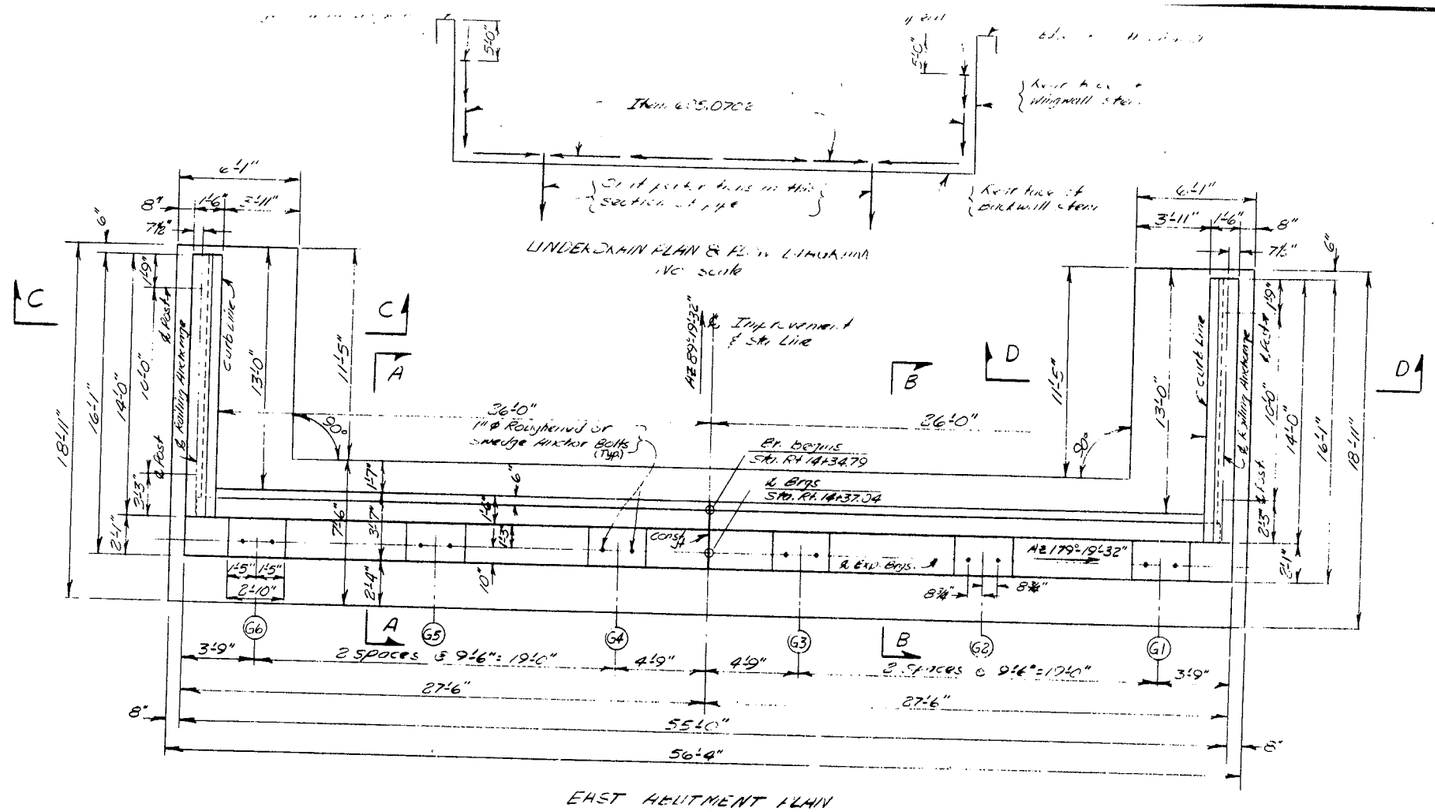
Item 605.0702
Item 555.01
Item 555.02
Item 555.01
Item 555.02
Item 555.01
Item 555.02

D250094

FED. NO. REG. NO.	STATE	FEDERAL AID PROJECT NO.	SHEET NO.	TOTAL SHEETS
	NEW YORK	I-481-2(152)	202	312

INTERSTATE RTE. 571 EXTENSION (I-481)
COLLAMER INTERCHANGE TO NORTHERN BLVD.
ONONDAGA COUNTY

CAPITAL PROJECT IDENTIFICATION NO. 3107.00

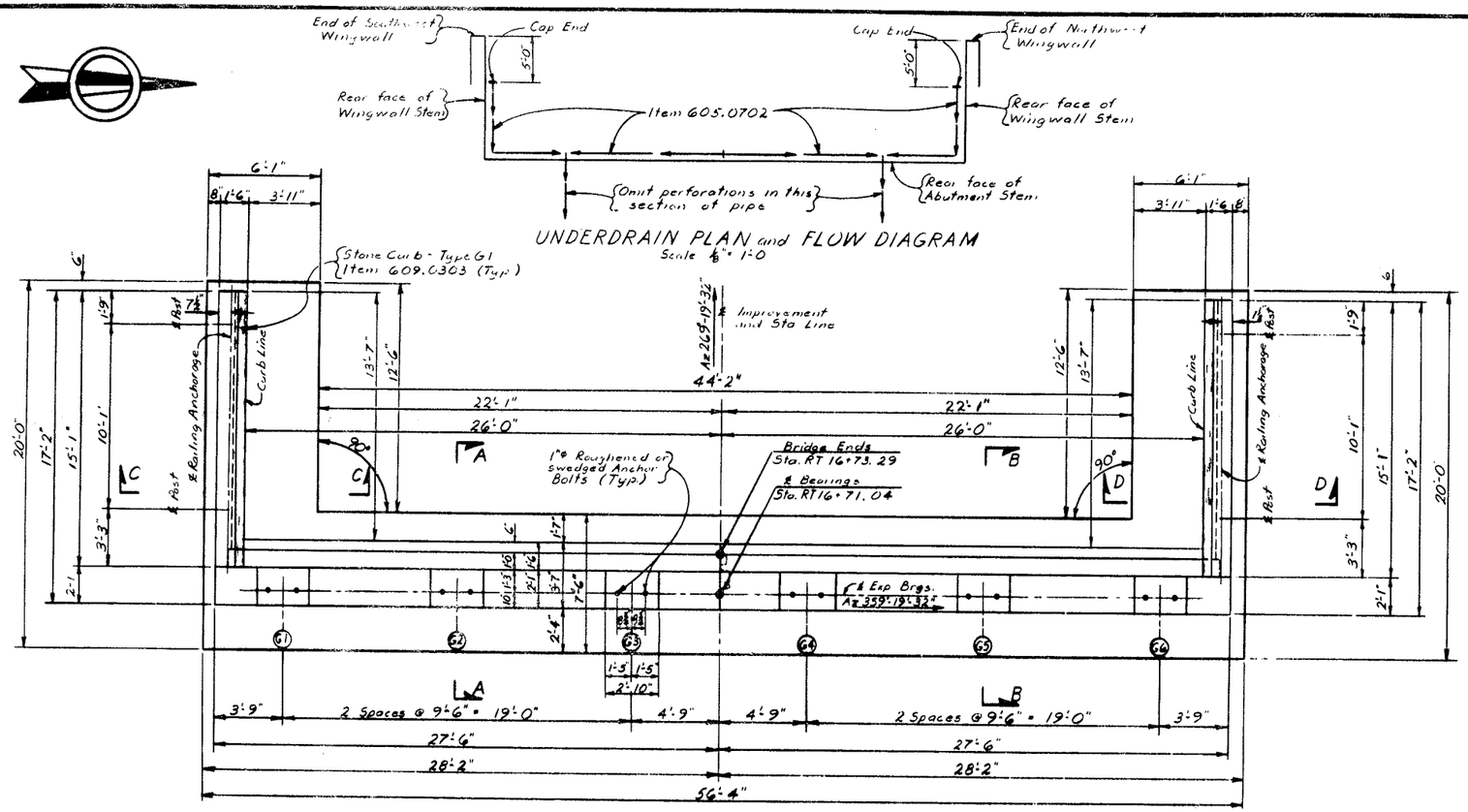

UNDERDRAIN PLAN and FLOW DIAGRAM
Scale ⅛" = 1'-0"

WEST ABUTMENT PLAN
Scale: ½" = 1'-0"

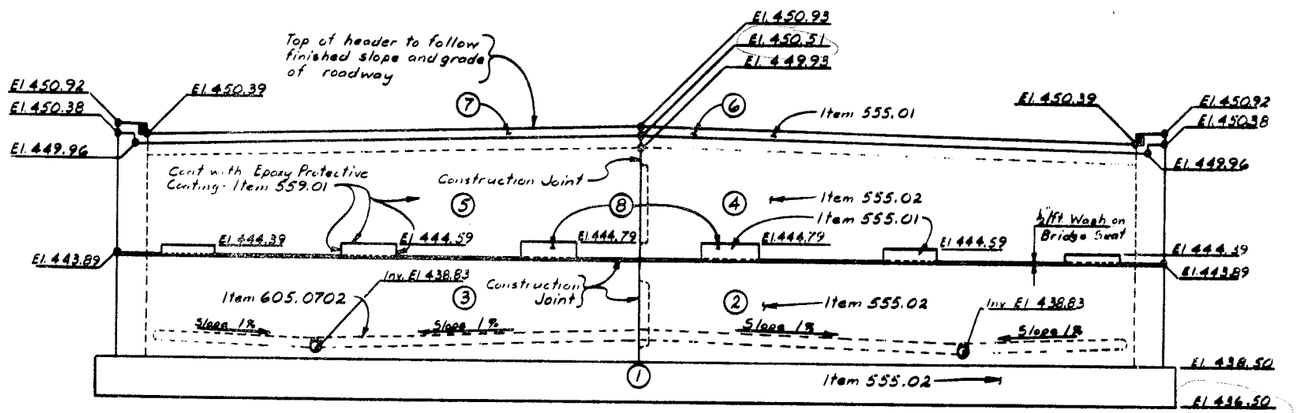

ELEVATION
Scale: ¼" = 1'-0"

CONCRETE and REINFORCEMENT TABLE

LOCATION and POUR No.	Class A Conc. Item 555.01	Class B Conc. Item 555.02	Uncoated Reinf. Item 556.0201	Epoxy Coated Reinf. Item 556.0202
Footing — Pour 1	—	42.56 C.Y.	2225 Lbs.	—
Stem — Pour 2	—	23.74 C.Y.	1413 Lbs.	—
Stem — Pour 3	—	23.74 C.Y.	1365 Lbs.	—
Backwall — Pour 4	—	14.33 C.Y.	667 Lbs.	103 Lbs.
Backwall — Pour 5	—	14.33 C.Y.	645 Lbs.	103 Lbs.
Header — Pour 6	.74 C.Y.	—	—	50 Lbs.
Header — Pour 7	.74 C.Y.	—	—	49 Lbs.
Pedestal — Pour 8	.92 C.Y.	—	99 Lbs.	—

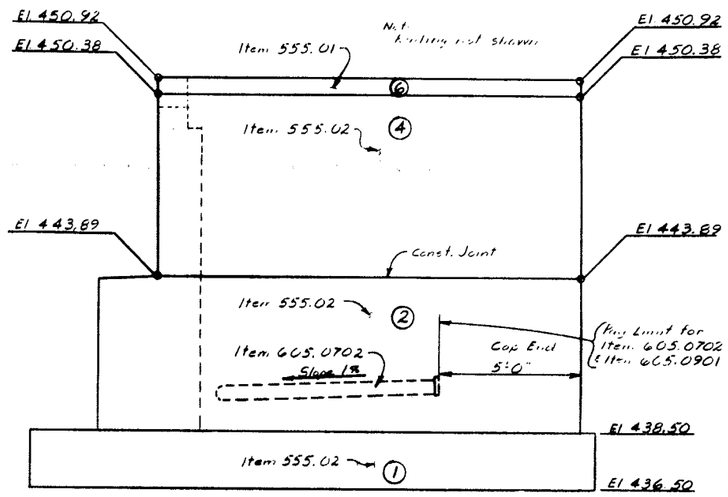

NORTHWEST WINGWALL
Scale ⅛" = 1'-0"

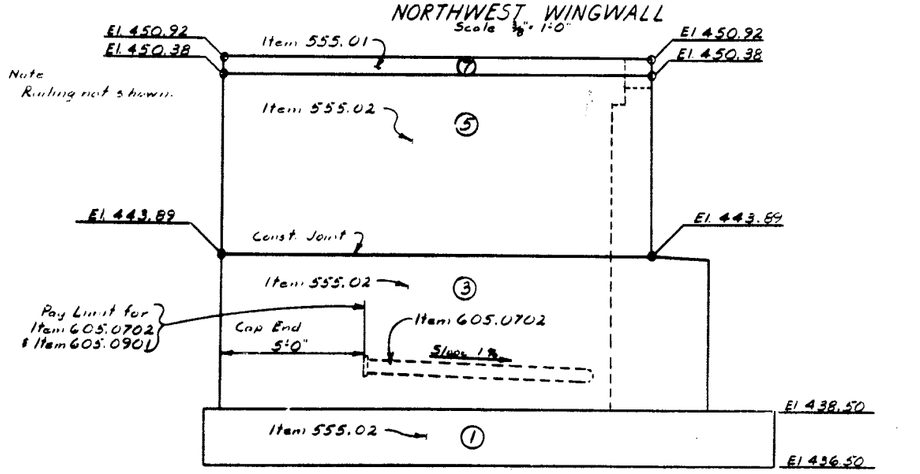

SOUTHWEST WINGWALL
Scale: ⅛" = 1'-0"

Notes,
For Sections A-A, B-B, C-C and D-D see Dwg No. 11.
For Curb details see Dwg No. 13.
For Bearing details see Dwg No. 14.
For Underdrain details see Dwg No. 6.
For Waterstop and Keyway Details see Dwg No. 13.

Notes,
For Pedestal Details see Dwg No. 11.
For Reinforcement Plans see Dwg No. 12.

Note:
For design purposes the foundation pressure does not exceed 2½ Tons per square foot.

STATE OF NEW YORK
DEPARTMENT OF TRANSPORTATION
DIVISION OF DESIGN AND CONSTRUCTION

BRIDGE NO. 1 RT RAMPS OVER I-481 EXTENSION

WEST ABUTMENT PLAN AND ELEVATIONS

DES. BY: F. Looker

D250094

FED. RD. REG. NO.	STATE	FEDERAL AID PROJECT NO.	SHEET NO.	TOTAL SHEETS
	NEW YORK	I-481-2(152)	206	312

INTERSTATE RTE. 571 EXTENSION (I-481)
COLLAMER INTERCHANGE TO NORTHERN BLVD.
ONONDAGA COUNTY

CAPITAL PROJECT IDENTIFICATION NO. 3107.00

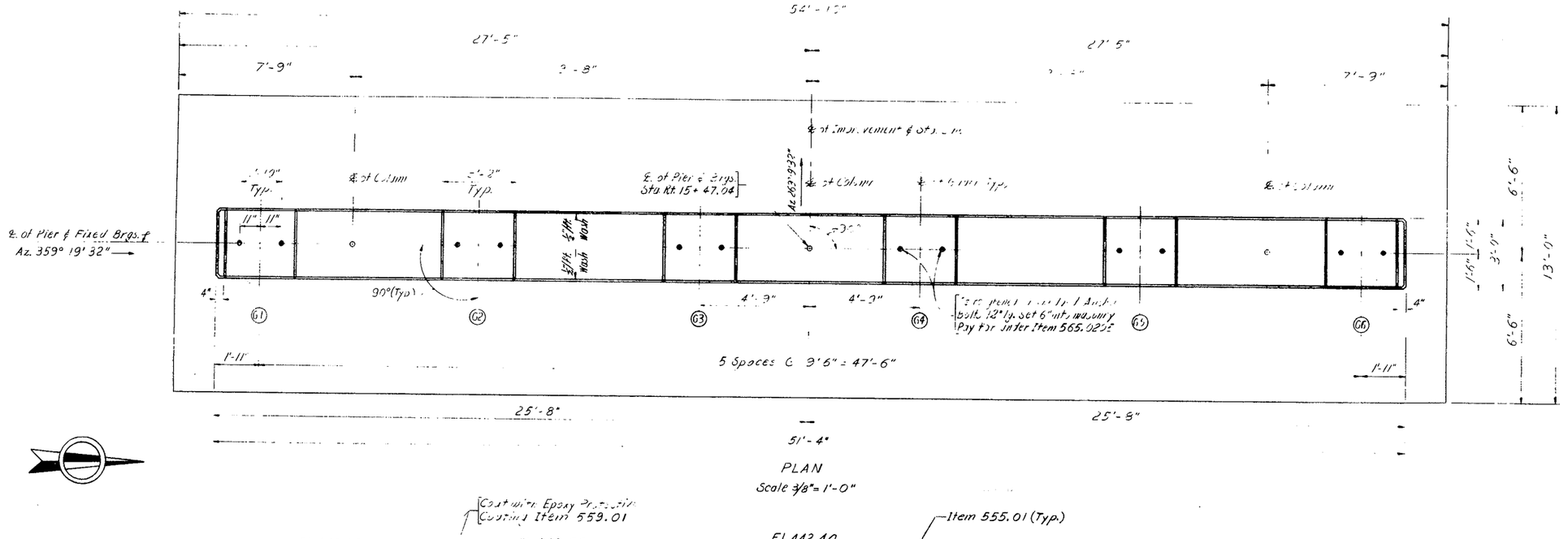

PLAN
Scale 3/8" = 1'-0"

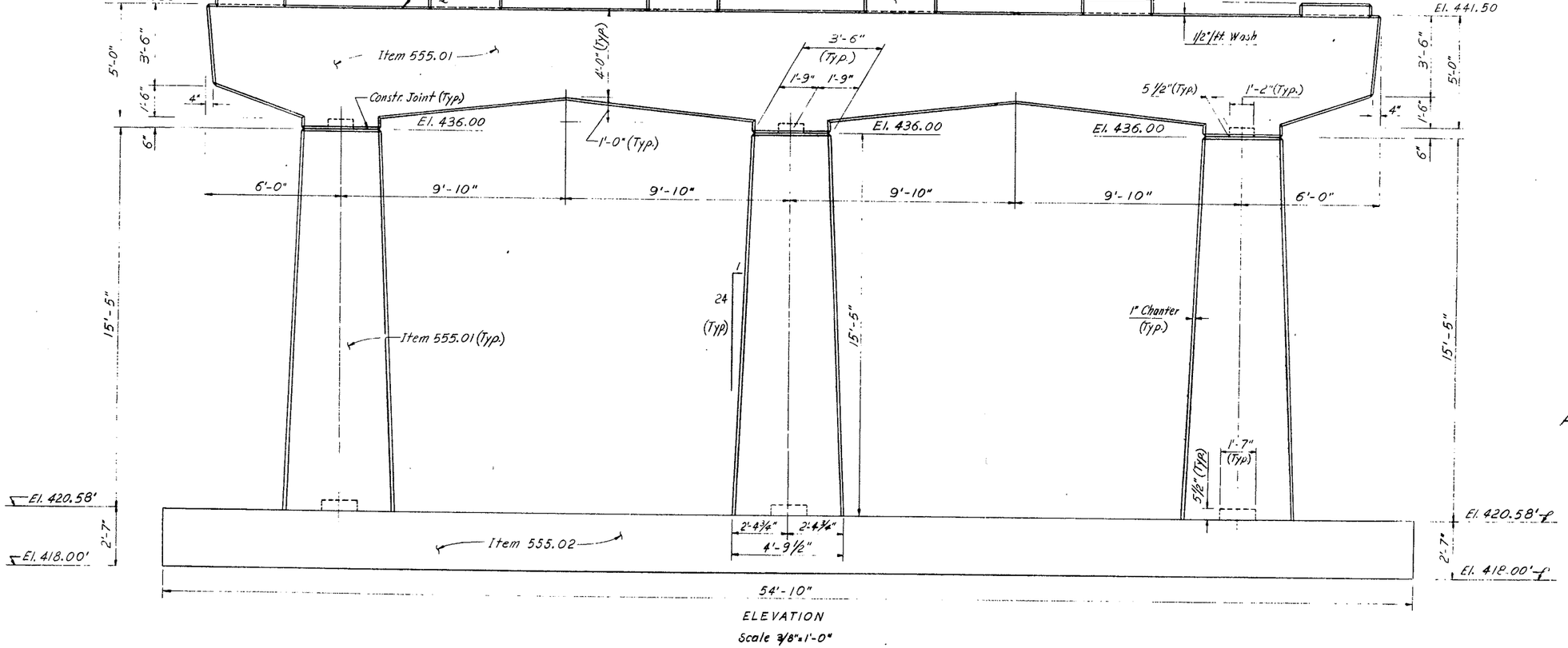

ELEVATION
Scale 3/8" = 1'-0"

Notes,
For design purposes the foundation pressure does not exceed 2 tons per square foot.
For Reinforcement Details see Dwg. No. 15.

STATE OF NEW YORK
DEPARTMENT OF TRANSPORTATION
DIVISION OF DESIGN AND CONSTRUCTION

BRIDGE NO. 1 RT RAMPS OVER I-481 EXTENSION

PIER PLAN AND ELEVATIONS

10725

D2500

FED. RD. REG. NO.	STATE	FEDERAL AID PROJECT NO.	SHEET NO.
	NEW YORK	I-481-2(152)	209

INTERSTATE RTE. 571 EXTENSION (I-481)
COLLAMER INTERCHANGE TO NORTHERN BLVD.
ONONDAGA COUNTY

CAPITAL PROJECT IDENTIFICATION NO. 3107.00

NOTE
Where holes are indicated, connections shall be 3/8" diameter A.S.T.M.-A325, Type 3 high strength bolts.

For additional notes see Dwg. No. 18

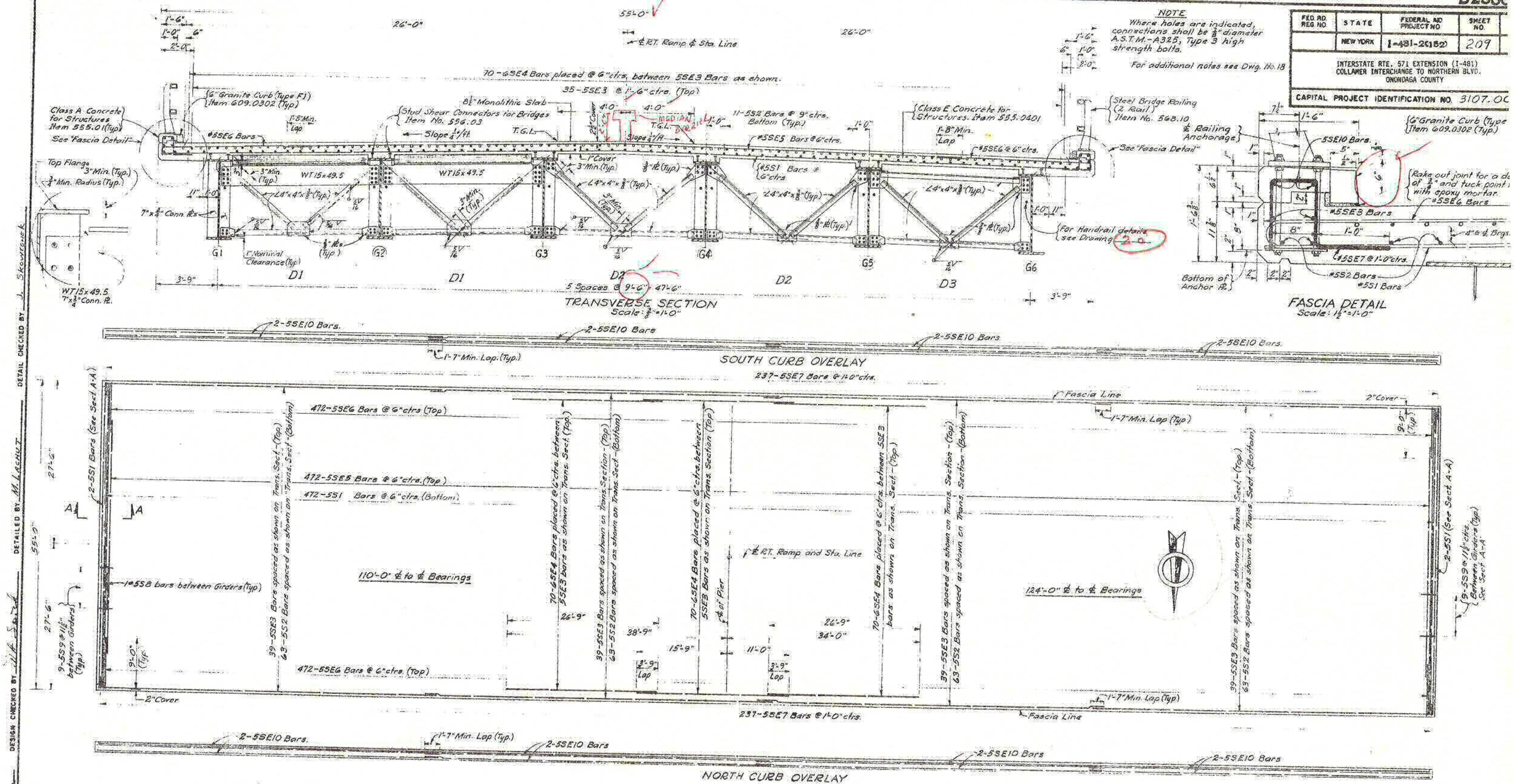

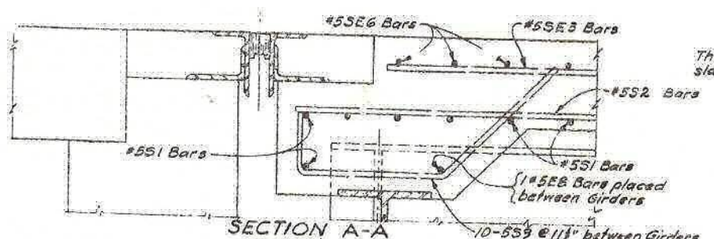

SECTION A-A
Scale: 1½"=1'-0"

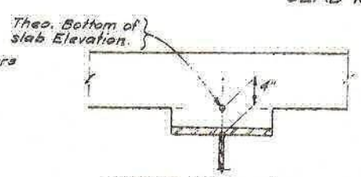

GIRDER HAUNCH DETAIL
Not to Scale

REINFORCEMENT AND CONCRETE TABLE

LOCATION	Class E Conc. Item 555.0401	Class A Conc. Item 555.01	Uncoat Reinf. Item 556.0201	Epoxy Coat Reinf. Item 556.0202
SLAB	12 990 S.F.	—	4[illegible]219 Lbs	48 97[illegible] Lbs.
SOUTH CURB OVERLAY	—	4.72 C.Y.	—	501 Lbs.
NORTH CURB OVERLAY	—	4.72 C.Y.	—	501 Lbs.

STATE OF NEW YORK
DEPARTMENT OF TRANSPORTATION
DIVISION OF DESIGN AND CONSTRUCTION

BRIDGE NO. 1 RT. RAMPS
OVER I-481 EXTENSION
TRANSVERSE SECTION AND
SLAB REINFORCEMENT PLAN

DESIGNED BY [illegible] DETAILED BY M. LACHUT DETAIL CHECKED BY J. Skowronek DESIGN CHECKED BY [illegible]

Note: Girders are not legibly numbered. The East bound bridge, should be north to south (G1-G6)

FED. RD. REG. NO.	STATE	FEDERAL AID PROJECT NO.	SHEET NO.	TOTAL SHEETS
	NEW YORK	I-481-2(52)	210	3

INTERSTATE RTE. 571 EXTENSION (I-481)
COLLAMER INTERCHANGE TO NORTHERN BLVD.
ONONDAGA COUNTY

CAPITAL PROJECT IDENTIFICATION NO. 3107.00

DESIGNED BY K. E. Hallenbeck — DESIGN CHECKED BY M. Ertel — DETAILED BY M. Liguit — DETAIL CHECKED BY J. Skowronek

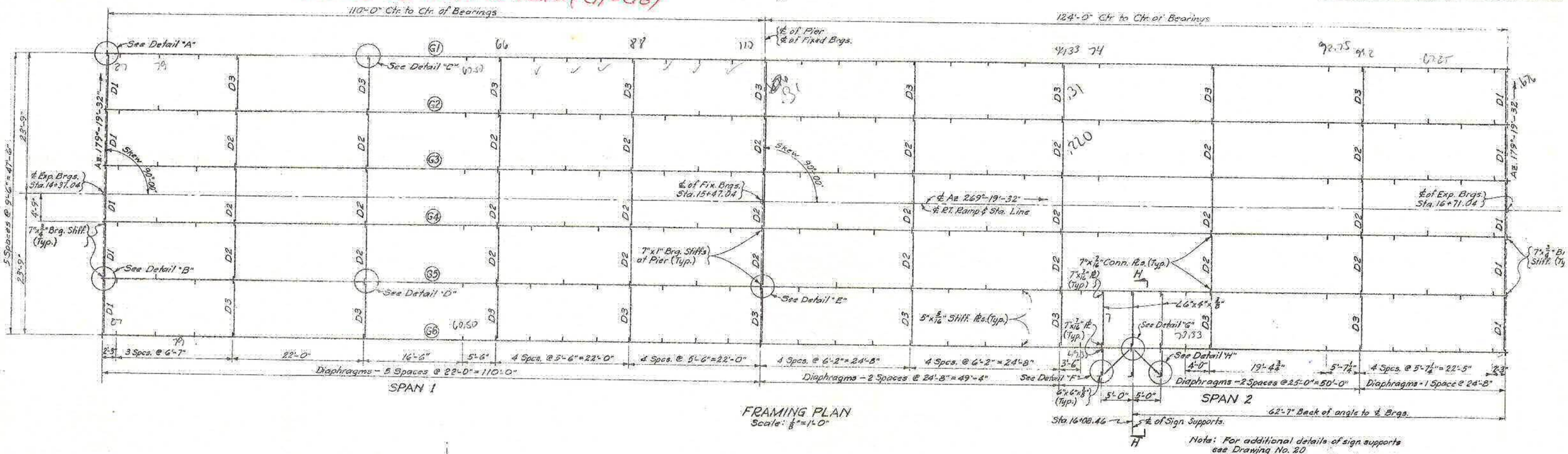

FRAMING PLAN
Scale: ⅛"=1'-0"

Note: For additional details of sign supports see Drawing No. 20
For Section H-H see Drawing No. 20.

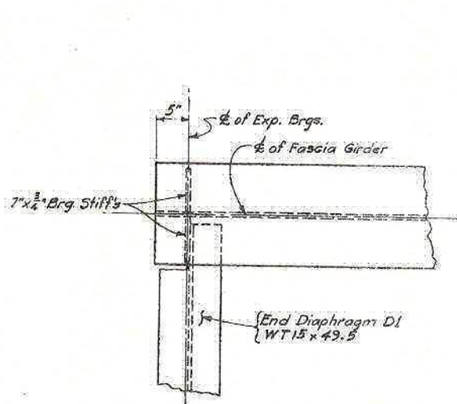

DETAIL "A"
Scale: 1"=1'-0"

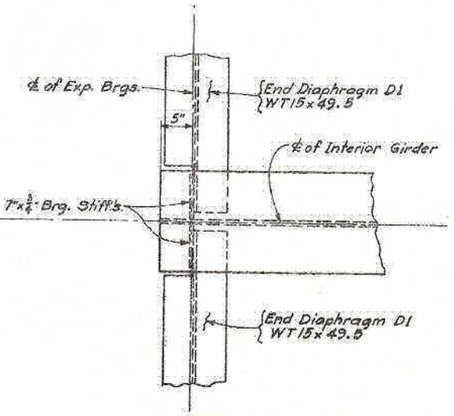

DETAIL "B"
Scale: 1"=1'-0"

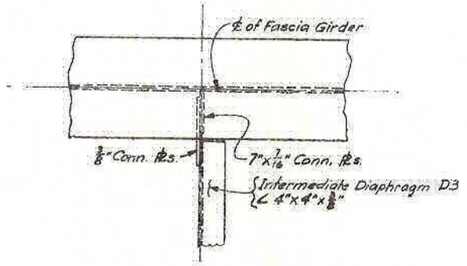

DETAIL "C"
Scale: 1"=1'-0"

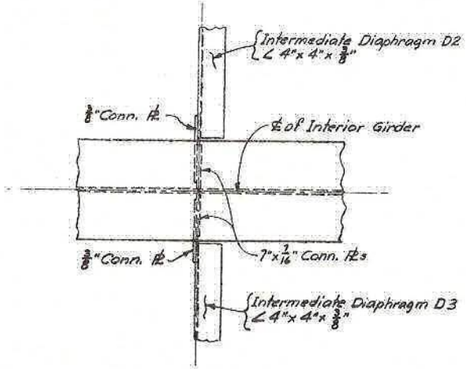

DETAIL "D"
Scale: 1"=1'-0"

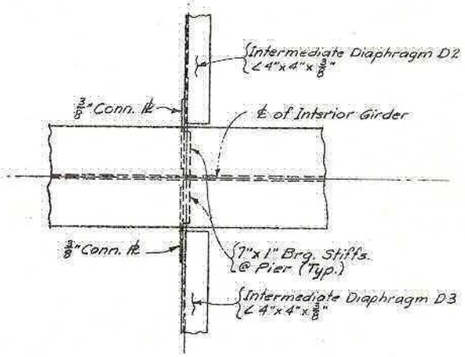

DETAIL "E"
Scale: 1"=1'-0"

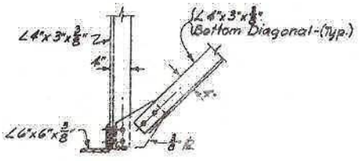

DETAIL "F"
Scale: ½"=1'-0"

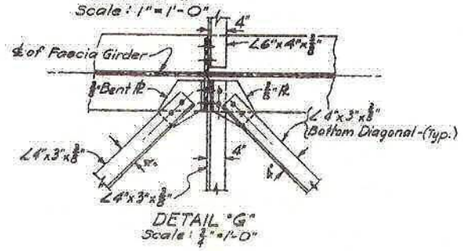

DETAIL "G"
Scale: ½"=1'-0"

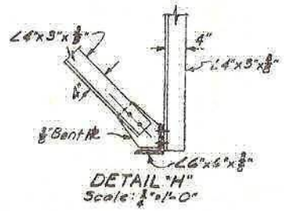

DETAIL "H"
Scale: ½"=1'-0"

FRAMING NOTES

Cross frames may be fabricated to fit the girders in their erected position and detailed shape, but deflected vertically under the dead load of the steel work only.

The Contractor may place diaphragms on either side of the bearing stiffeners or stiffener connection plates as necessary to correct alignment, provided the work is done in accordance with other structural details.

Snipe the outstanding leg of all angles and plates 1" minimum.

STATE OF NEW YORK
DEPARTMENT OF TRANSPORTATION
DIVISION OF DESIGN AND CONSTRUCTION

BRIDGE NO. 1 RT RAMPS OVER I-481 EXTENSION

FRAMING PLAN

PROJ. ENG. F. Looker	DATE MADE Nov. 1981
SQUAD D. J. Roy	DRAWING NO. 18 OF 28

SD 173a (7/80)

110-76 = 34 26.08

33.27 73
26.75 33

1072530

D250004

FED. RD. REG. NO.	STATE			
	NEW YORK	I-481-2(182)	211	312

INTERSTATE RTE. 571 EXTENSION (I-481)
COLLAMER INTERCHANGE TO NORTHERN BLVD.
ONONDAGA COUNTY

CAPITAL PROJECT IDENTIFICATION NO. 3107.00

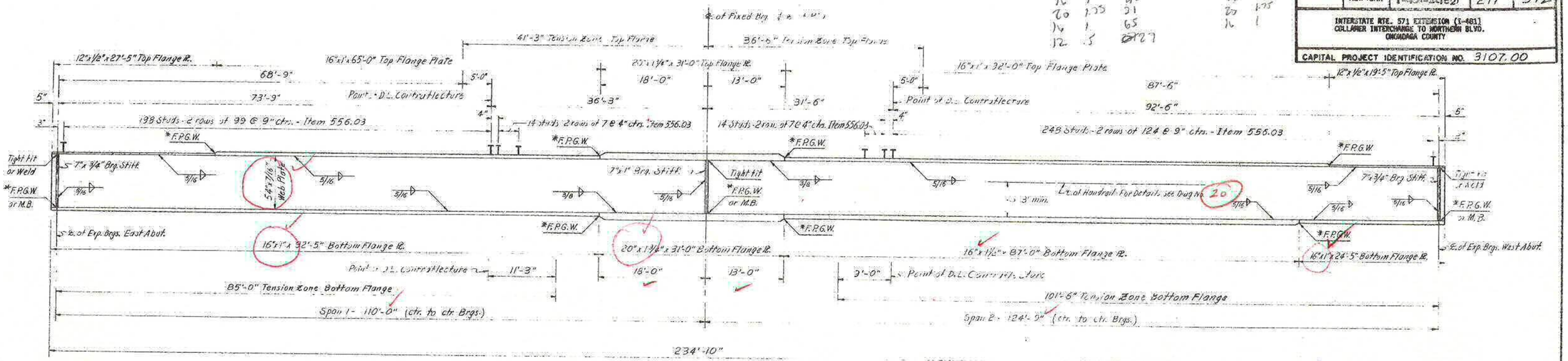

END ABUT.

FOR INSPECTION SPAN 2

SPAN 1 FOR INSPECTION

BEGIN ABUT

GIRDER DETAIL

Scale: Horiz. 1/8" = 1'-0"
Vert. 1/4" = 1'-0"

Welding Notes:

* F.P.G.W. = Full Penetration Groove Weld
M.B. = Mill to bear

Welding Note "A"

No welding of stiffeners in connection plates to tension flanges. Plates should be tight fit.

Welding Note "B"

All connection plates used in pairs shall be welded to the web and be placed paint tight against both flanges. This may be accomplished by cutting the connection plates 1/8" short and then placing the connection plate tightly against the tension flange and welding the opposite end to the compression flange. Fitted connection plates shall not be driven in place with sufficient force to distort the flange web or connection plates.

All steel to be A588 unless otherwise noted

Notes.

For Handrail Details see Dwg. No. 20
For Stud Shear Connector Details see Dwg. No. 20
For Girder Tables see Dwg. No. 21
For Schematic Girder Layout see Dwg. No. 21
For details of Flange Width and Thickness Transition see Dwg. No. 20
For Drip Bar Detail see Dwg. No. 20
For Flange Thickness Taper Detail see Dwg. No. 20
For location of Connection Plates and Intermediate Stiffeners see Dwg. No. 18

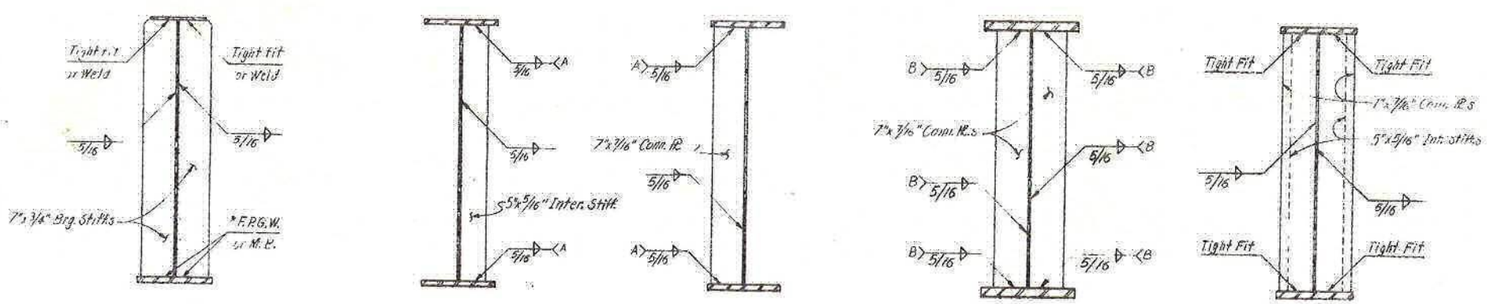

BRG. STIFF

INTERMEDIATE STIFF

CONN. PL. - FASCIA GIRDER

CONN. PL. - INTERIOR GIRDER

AT POINT OF D.L. CONTRAFLECTURE

GIRDER SECTIONS

Scale: 3/4 = 1'-0"

Note:
Handrail not shown

Note to the Contractor:

Within the tension zones delineated, there shall be no welding permitted other than what is detailed on the plans. Welding for the attachment of forms, ties etc. shall not be permitted.

STATE OF NEW YORK
DEPARTMENT OF TRANSPORTATION
DIVISION OF DESIGN AND CONSTRUCTION

BRIDGE NO. 1 RT RAMPS
OVER I-481 EXTENSION

3/3 1072530

D259214

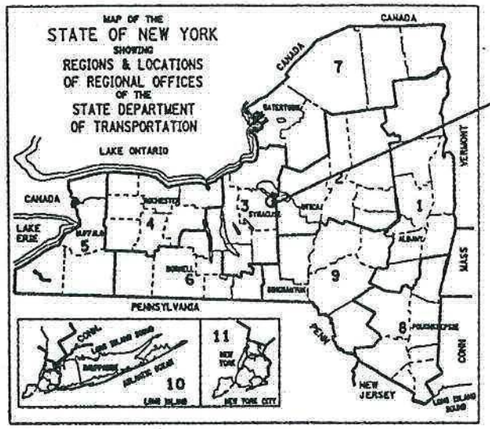

THIS IS A BRIDGE REHABILITATION PROJECT ON VARIOUS BRIDGES ON INTERSTATE 481, LOCATED IN THE TOWNS OF CICERO AND DEWITT IN ONONDAGA COUNTY. THIS WORK CONSISTS OF BRIDGE JOINTS, BEARINGS, BRIDGE RAIL AND CONCRETE REPAIR OF SUBSTRUCTURES. THERE ARE 28 BRIDGES IN THE PROJECT BEGINNING AT REFERENCE MARKER 481-3301-1000 SOUTH OF THE CITY OF SYRACUSE AND ENDING AT REFERENCE MARKER 481-3301-2143. 1481 INTERCHANGE NORTH OF THE CITY.

STATE OF NEW YORK
DEPARTMENT OF TRANSPORTATION
OFFICE OF ENGINEERING

BRIDGE REHABILITATION PROJECT (ELEMENT SPECIFIC)
VARIOUS BRIDGES ON INTERSTATE 481
TOWNS OF DEWITT AND CICERO

VOLUME 1 OF 2

432 SHEETS ONONDAGA COUNTY CONTRACT D259214

F.A. PROJECT

STANDARD SHEETS

M203-4, M203-5, M203-6R1, M603-1
M606-32, M606-33, M606-34,
M619-3R1, M619-4, M619-5
M685-1, M685-2R1, M685-3R1
M685-4R1, M685-5R1, M403-1, M203-4,
M203-5, M203-6R1, M603-1

6/8/06 ? - who did?
Bruce Pauly 7/1/2008
Bruce Pauly 7/22/2010
6/29/12

ALL WORK CONTEMPLATED UNDER THIS CONTRACT IS TO BE COVERED BY AND IN CONFORMITY WITH THE STANDARD SPECIFICATIONS (METRIC UNITS) OF JANUARY 2, 2002, AS AMENDED BY ADDENDA NOS. 1 AND 2, EXCEPT AS MODIFIED ON THESE PLANS AND IN THE ITEMIZED PROPOSAL.

CONTRACTOR'S NAME_____
AWARD DATE_____
COMPLETION DATE_____
FINAL ACCEPTANCE DATE_____
REGIONAL DIRECTOR_____
ENGINEER IN CHARGE_____
FINAL COST TOTAL_____

FISCAL SHARE	COST(S)

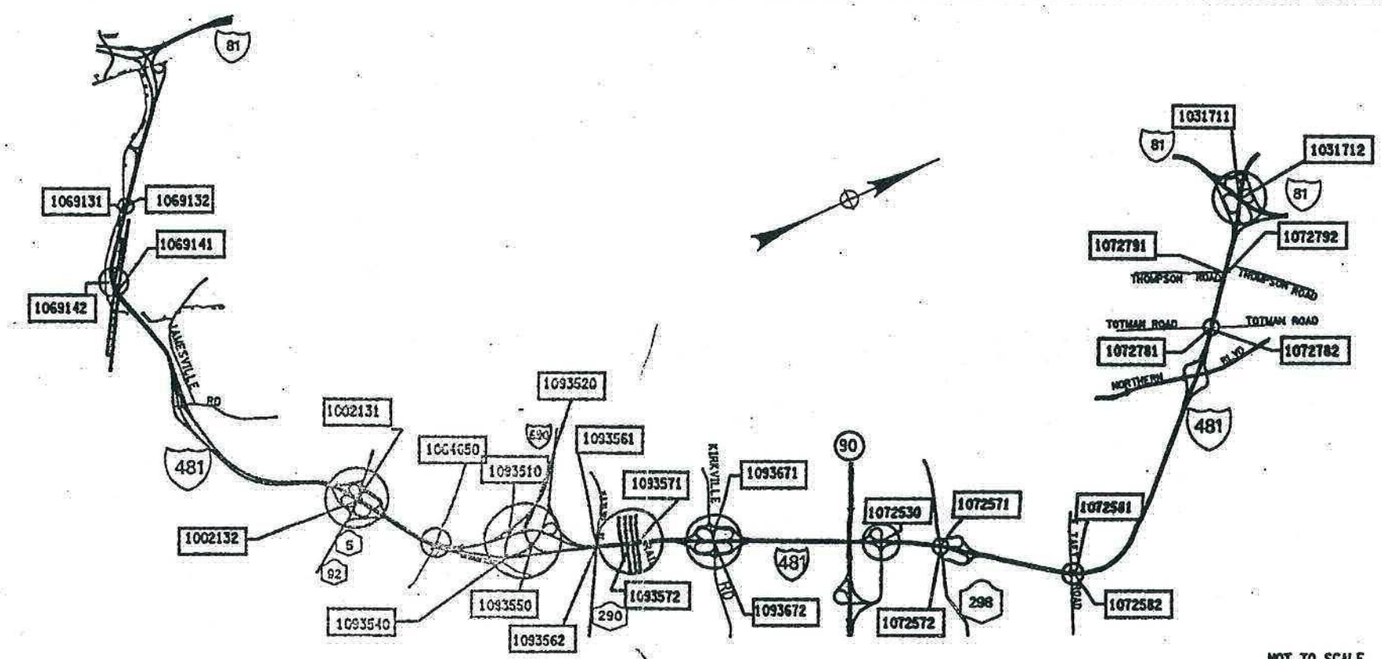

PROJECT LOCATION

BRIDGE REHAB. PROJ.- ELEMENT SPECIFIC			
VARIOUS BRIDGES ON INTERSTATE 481			
TOWNS OF DEWITT AND CICERO			
ONONDAGA COUNTY			
FED. ROAD REG. NO.	STATE	SHEET NO.	TOTAL SHEETS
1	N.Y.	1	432
FEDERAL AID PROJECT NO.			
CAPITAL PROJECT IDENTIFICATION NO. 3056.13			

INDEX ON SHEET NO. 5 & 6

RECOMMENDED BY John E. Fretz 9/04/02
REGIONAL DESIGN ENGINEER DATE

RECOMMENDED BY Myron A. Dinsby 9/4/02
REGIONAL CONSTRUCTION ENGINEER DATE

RECOMMENDED BY 9/04/02
REGIONAL TRANSPORTATION MAINTENANCE ENGINEER DATE

RECOMMENDED BY 9-4-02
REGIONAL TRAFFIC ENGINEER DATE

APPROVED BY 09-04-02
REGIONAL DIRECTOR DATE

DESIGN SUPERVISOR Clarence E. JOB MANAGER Nick DeCicco DESIGNED BY A. Bielsky CHECKED BY Alex Popp ESTIMATED BY Bruce Wiley DRAFTED BY Alex Popp CHECKED BY Alex Popp

FED ROAD REG. NO.	STATE	CONTRACT NO.	SHEET NO.	TOTAL SHEETS
1	N.Y.	D259214	247	432

BRIDGE REHABILITATION PROJECT (ELEMENT SPECIFIC)
VARIOUS BRIDGES ON INTERSTATE 481
TOWNS OF DEWITT AND CICERO
ONONDAGA COUNTY
P.I.N. 305613 B.I.N. 1072530

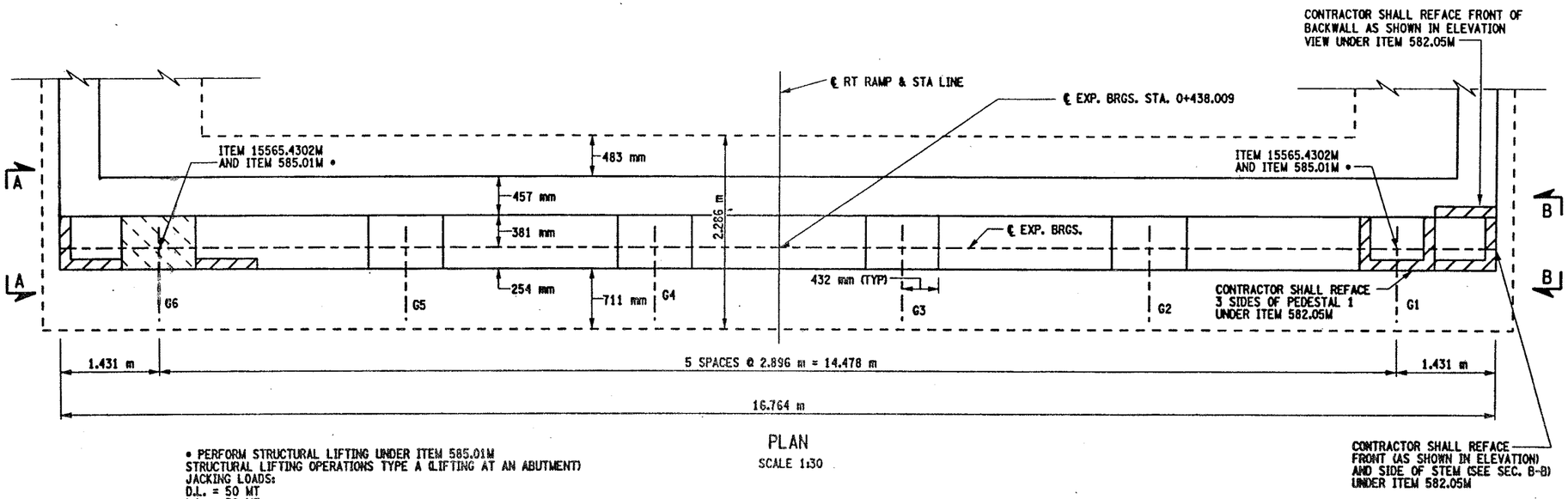

PLAN
SCALE 1:30

• PERFORM STRUCTURAL LIFTING UNDER ITEM 585.01M
STRUCTURAL LIFTING OPERATIONS TYPE A (LIFTING AT AN ABUTMENT)
JACKING LOADS:
D.L. = 50 MT
L.L. = 50 MT
TOTAL = 100 MT

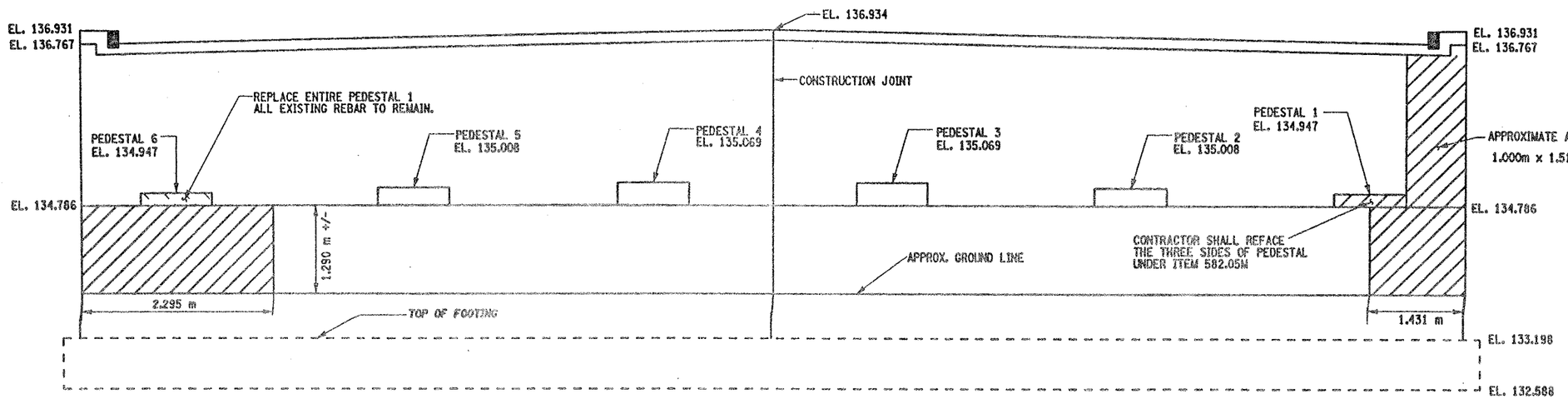

ELEVATION
SCALE 1:30

LIST OF ITEMS USED:

ITEM 555.0105M - CONCRETE FOR STRUCTURES CLASS A (CM)
ITEM 15565.4302M - BRIDGE BEARING RESTORATION (EA)
ITEM 580.01M - REMOVAL OF STRUCTURAL CONCRETE (CM)
ITEM 585.01M - STRUCTURAL LIFTING OPERATIONS, TYPE A (EA)
ITEM 582.05M - REMOVAL OF STRUCTURAL CONCRETE REPLACEMENT WITH CLASS A CONCRETE (CM)

NOTES:

1. ALL DIMENSIONS SHOWN FOR CONCRETE REMOVAL ARE APPROXIMATE AND SHALL BE FIELD VERIFIED BY THE CONTRACTOR AND EIC.
2. REMOVE CONCRETE TO LIMITS SHOWN AS WELL AS TO SOUND CONCRETE, A.O.B.E.
3. WHEN REMOVING EXISTING CONCRETE, SAWCUT 5 mm MIN. TO PRODUCE NEAT REMOVAL LINES. ANY COST TO BE INCLUDED IN THE BID PRICE FOR ITEM 582.05M.
4. ALL EXISTING REINFORCEMENT TO REMAIN.
5. ELEVATIONS ARE GIVEN FOR QUANTITY ESTIMATES ONLY.
6. REFER TO CONTRACT D250094 FOR ORIGINAL CONSTRUCTION DETAILS.
7. FOR REMOVAL DETAIL SECTION A-A AND SECTION B-B SEE DWG AB7-2.

BRIDGE BEARING RESTORATION NOTES:

1. THE BRIDGE BEARING RESTORATION ITEM 15565.4302M SHALL INCLUDE ALL DESIGNATED WORK AS PER THE SPECIFICATION.
2. STRUCTURAL LIFTING SHALL BE USED WITH ALL EXPANSION BEARING RESTORATION.
3. IF THE CONTRACTOR ELECTS TO LIFT ONLY ONE GIRDER AT A TIME PER SPAN (TO A MAXIMUM OF 3 mm TO REMOVE LOAD FROM BEARINGS), NO VEHICULAR TRAFFIC RESTRICTIONS WILL BE REQUIRED AS STATED IN SPECIFICATION SECTION 585- STRUCTURAL LIFTING OPERATIONS.
4. BEARING RESTORATION SHALL INCLUDE REPLACEMENT OF BRONZE PLATE.
5. FIXED BEARINGS TO BE CLEANED IN PLACE. DO NOT DISASSEMBLE.
6. SEE BR-7 FOR BEARING RESTORATION DETAILS.

AREAS OF PROPOSED WORK: ITEM 580.01M REMOVAL OF STRUCTURAL CONCRETE (CM), ITEM 555.0105M CONCRETE FOR STRUCTURES, CLASS A (CM)

AREAS OF PROPOSED WORK: ITEM 582.05M REMOVAL OF STRUCTURAL CONCRETE- REPLACEMENT WITH CLASS A CONCRETE

ALL DIMENSIONS ARE IN m UNLESS OTHERWISE NOTED

AS BUILT REVISIONS

SIGNATURE DATE

RAMP TO INTERSTATE 481
OVER
INTERSTATE 481
EAST ABUTMENT

STATE OF NEW YORK
DEPARTMENT OF TRANSPORTATION

FILENAME	REGION	DATE	DRAWING NO.
305613AP.A1B	3	10/02	AB7-1

DESIGN SUPERVISOR ____ JOB MANAGER ____ DESIGNED BY ____ ESTIMATED BY ____ DRAFTED BY ____ CHECKED BY ____ CHECKED BY

FED ROAD REG. NO.	STATE	CONTRACT NO.	SHEET NO.	TOTAL SHEETS
1	N.Y.	D259214	362	432

BRIDGE REHABILITATION PROJECT (ELEMENT SPECIFIC)
VARIOUS BRIDGES ON INTERSTATE 481
TOWNS OF DEWITT AND CICERO
ONONDAGA COUNTY
P.I.N. 305613 | B.I.N. ALL BINS

BRIDGE JOINT TABLE

B.I.N. NUMBER	JOINT LOCATION	JOINT SKEW	SPAN(S) LENGTH FOR JOINT (METERS)	JOINT BEND LOCAT'N RT	JOINT BEND LOCAT'N LT	EXISTING JOINT TYPE	PROPOSED JOINT TYPE	CURB TO CURB DISTANCE (METERS) (SEE NOTES)	FASCIA & MEDIAN LENGTH (METERS) LT/RT	TOTAL LENGTH (METERS)	JOINT ITEM NUMBER(S)	DRAWING NUMBER SECT VIEW	DRAWING NUMBER PLAN VIEW	DRAWING NUMBER FASCIA DETAIL
1072530	EAST ABUT.	0°-00'-00"	33.528	N	N	ACJ	MAC-5	15.850	.457/.457	16.764	567.35M	JD-30	JD-29	JD-30
	WEST ABUT.	0°-00'-00"	37.795	N	N	ACJ	MAC-5	15.850	.457/.457	16.764	567.35M	JD-30	JD-29	JD-30
1072571	SOUTH ABUT.	20°-29'-45.2"	44.196	N	N	ACJ	MAC-6	14.481	.488/.488	15.457	567.36M	JD-32	JD-31	JD-32
	NORTH ABUT.	20°-29'-45.2"	———	N	N	ACJ	MAC-1	15.456	.488/.488	16.428	567.31M	JD-32	JD-31	JD-32
1072572	SOUTH ABUT.	21°-09'-2.1"	44.196	N	N	ACJ	MAC-6	12.746	.490/.490	13.726	567.36M	JD-34	JD-33	JD-34
	NORTH ABUT.	21°-09'-2.1"	———	N	N	ACJ	MAC-1	12.746	.490/.490	13.726	567.31M	JD-34	JD-33	JD-34
1072581	SOUTH ABUT.	3°59'-27.5"	37.033	N	N	ACJ	MAC-5	11.917	.458/.458	12.833	567.35M	JD-36	JD-35	JD-36
	NORTH ABUT.	3°-59'-27.5"	———	N	N	ACJ	MAC-1	11.917	.458/.458	12.833	567.31M	JD-36	JD-35	JD-36
1072582	SOUTH ABUT.	3°-51'-57.9"	37.033	N	N	ACJ	MAC-5	11.915	.458/.458	12.831	567.35M	JD-38	JD-37	JD-38
	NORTH ABUT.	3°-51'-57.9"	———	N	N	ACJ	MAC-1	11.915	.458/.458	12.831	567.31M	JD-38	JD-37	JD-38
1072781	EAST ABUT.	16°-26'-24"	———	N	N	ACJ	MAC-1	12.500	.530/.530	13.560	567.31M	JD-40	JD-39	JD-40
	WEST ABUT.	16°-26'-24"	33.635	N	N	ACJ	MAC-5	12.500	.530/.530	13.560	567.35M	JD-40	JD-39	JD-40
1072782	EAST ABUT.	16°-26'-24"	———	N	N	ACJ	MAC-1	13.183	.530/.530	14.243	567.31M	JD-42	JD-41	JD-42
	WEST ABUT.	16°-26'-24"	31.394	N	N	ACJ	MAC-5	12.589	.530/.530	13.649	567.35M	JD-42	JD-41	JD-42
1072791	EAST ABUT.	17°-02'-59.4"	30.785	N	N	ACJ	RCS	12.566	.531/.531	13.628	16567.64M	JD-47	JD-43	JD-47
	WEST ABUT.	17°-02'-59.4"	———	N	N	ACJ	RCS	12.566	.531/.531	13.628	16567.64M	JD-47	JD-43	JD-47
1072792	EAST ABUT.	17°-02'-59.4"	30.785	N	N	ACJ	MAC-5	12.566	.530/.530	14.015	567.35M	JD-44	JD-43	JD-44
	WEST ABUT.	17°-02'-59.4"	———	N	N	ACJ	MAC-1	12.566	.530/.530	14.015	567.31M	JD-44	JD-43	JD-44
1093510	WEST ABUT.	44°-07'-00"	———	N	N	ACJ/ADA	RCS	16.560	.637/.637	17.834	16567.64M	JD-46	JD-45	JD-46
	EAST ABUT.	40°-26'-00"	37.522	N	N	ADA	RADA	15.620	———	15.620	———	JD-46	JD-45	———

LEGEND

EXISTING JOINT TYPE:

ACJ = ARMORED COMPRESSION JOINT SYSTEM
MOD = MODULAR JOINT SYSTEM
MAC = MODIFIED ARMORED COMPRESSION SYSTEM (NO HORIZ. ARMORING ANGLE)
ADA = ARMORED DECK ANGLE
SS = STRIP SEAL JOINT
OPEN = OPEN JOINT

PROPOSED JOINT TYPE:

MAC-1 = MOD. ARM./COMP. SEAL JT. SYS. (A-1)
MAC-2 = MOD. ARM./COMP. SEAL JT. SYS. (A-2)
MAC-5 = MOD. ARM./COMP. SEAL JT. SYS. (A-5)
MAC-6 = MOD. ARM./COMP. SEAL JT. SYS. (A-6)
RCS = REPLACE EXISTING COMPRESSION SEAL
RADA = REMOVE ARMOR DECK ANGLE
MOD-1 = MODULAR JT. SYS. (ONE-CELL)
MOD-2 = MODULAR JT. SYS. (TWO-CELL)

JOINT BEND LOCATION:

N = NO BENDS
CRB = CURB LINE
PAV'T = PAVEMENT

GENERAL NOTES:

- ALL MEASUREMENTS SHALL BE FIELD VERIFIED.
- CURB TO CURB LENGTHS ARE MEASURED ALONG ℄ OF JOINT.
- MULTIPLE DIMENSIONS ARE SHOWN LOOKING UP-STATION, LEFT TO RIGHT.
- ALL DIMENSIONS ARE SHOWN IN METERS.

INFORMATIONAL NOTES:

BIN 1072530 - NO JOINT AT PIER.

BIN 1072791 - REPLACE COMPRESSION SEALS
BEG. ABUT. (EAST), TYPE A-5
END ABUT. (WEST), TYPE A-1

FOR JOINT DETAILS REFER TO THE FOLLOWING DRAWINGS:

DWG. NO. JD-1 - MODIFIED ARMORED COMPRESSION SEAL JOINT SYSTEM.
DWG. NO. JD-24 - ONE-CELL MODULAR JOINT SYSTEM.
DWG. NO. JD-25 - TWO-CELL MODULAR JOINT SYSTEM.

LIST OF BRIDGE JOINT ITEMS USED:

ITEM 566.01M - MODULAR EXP. JOINT SYSTEM ONE-CELL (M)
ITEM 566.02M - MODULAR EXP. JOINT SYSTEM TWO-CELL (M)
ITEM 567.31M - MODIFIED ARMORED JOINT SYSTEM W/ COMP. SEAL TYPE A1 (m)
ITEM 567.32M - MODIFIED ARMORED JOINT SYSTEM W/ COMP. SEAL TYPE A2 (m)
ITEM 567.35M - MODIFIED ARMORED JOINT SYSTEM W/ COMP. SEAL TYPE A5 (m)
ITEM 567.36M - MODIFIED ARMORED JOINT SYSTEM W/ COMP. SEAL TYPE A6 (m)
ITEM 16567.640001M - REPLACE COMPRESSION SEAL FOR EXISTING BRIDGE JOINTS (m)

ALL DIMENSIONS ARE IN m UNLESS OTHERWISE NOTED

AS BUILT REVISIONS

SIGNATURE ——— DATE ———

INTERSTATE 481 VARIOUS BRIDGES

BRIDGE JOINT TABLE

STATE OF NEW YORK
DEPARTMENT OF TRANSPORTATION

FILENAME	REGION	DATE	DRAWING NO.
305613AJJA1	3	10/02	JT-2

DESIGN SUPERVISOR ——— JOB MANAGER ——— DESIGNED BY ——— DRAFTED BY ——— CHECKED BY ——— ESTIMATED BY

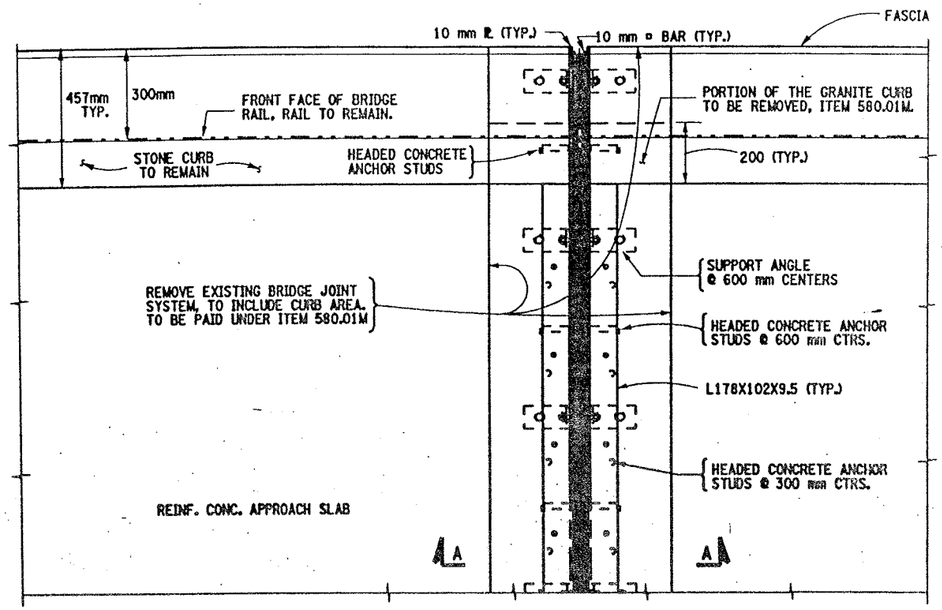

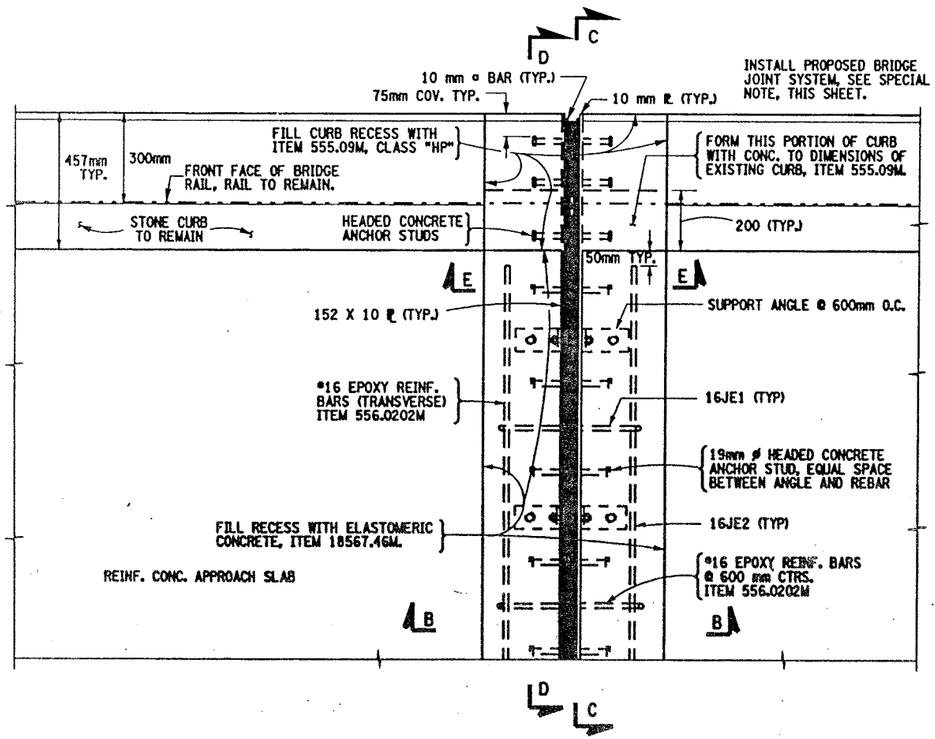

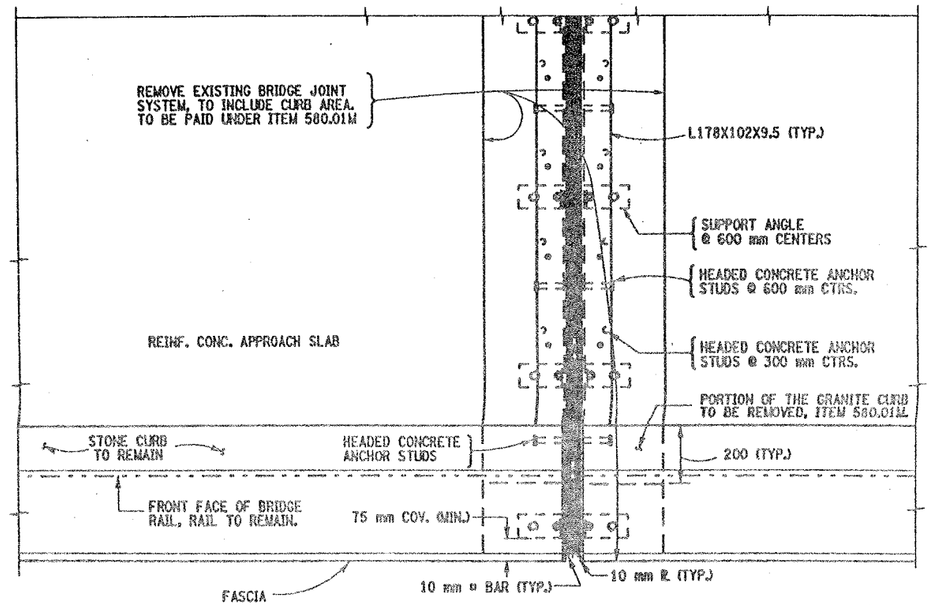

EXISTING ABUTMENT JOINT PARTIAL PLAN

BIN 1072530 - BEG. ABUT. SHOWN
END ABUT. SIMILAR

NOT TO SCALE

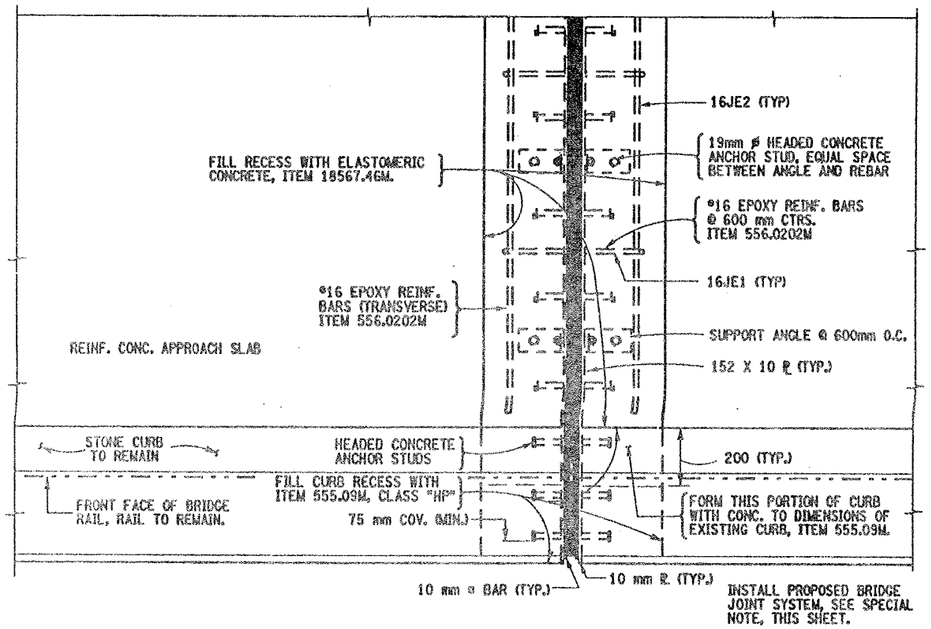

PROPOSED ABUTMENT JOINT PARTIAL PLAN

BIN 1072530 - BEG. ABUT. SHOWN
END ABUT. SIMILAR

NOT TO SCALE

FED ROAD REG. NO.	STATE	CONTRACT NO.	SHEET NO.	TOTAL SHEETS
1	N.Y.	D259214	393	432

BRIDGE REHABILITATION PROJECT (ELEMENT SPECIFIC)
VARIOUS BRIDGES ON INTERSTATE 481
TOWNS OF DEWITT AND CICERO
ONONDAGA COUNTY
P.I.N. 305613 B.I.N. 1072530

NOTES:

1. REFER TO DWG. NO. JD-1 FOR PROPOSED JOINT DETAILS AND ALL NOTES SHALL APPLY.
2. FOR SECTION VIEWS SEE DWG. NO. JD-30.
3. REFER TO DWG. NO. JT-2 FOR PROPOSED BRIDGE JOINT INSTALLATION LOCATIONS.
4. THE SECTION OF THE GRANITE CURB SHALL BE SAWCUT TO PRODUCE NEAT REMOVAL LINES. COST BE TO INCLUDED IN PRICE BID FOR 580.01M.
5. THE STRUCTURE HAS A 0° SKEW ANGLE.
6. A SECTION OF THE EXISTING GRANITE CURB TO BE REMOVED TO FACILITATE THE INSTALLATION OF THE NEW BRIDGE JOINT. THIS REMOVAL SHALL BE INCLUDE IN PRICE BID FOR ITEM 580.01M.
7. BRIDGE JOINT REPAIRS/REPLACEMENT SHALL BE CONDUCTED UTILIZING NIGHT-TIME CONSTRUCTION TECHNIQUES FOR BOTH OF THESE STRUCTURES. WHEN EVER THE JOINT BLOCK-OUT CONCRETE IS REMOVED OR CURING. STEEL ROAD PLATES SHALL BE USED. REFER TO DWG. NO. AA-RP1 FOR ROAD PLATE DETAILS.
8. NOTE, THE STRUCTURE HAS A BOX BEAM BRIDGE RAIL MEDIAN BARRIER, TO REMAIN - NO WORK.

SPECIAL NOTE:

BIN 1072530 - INSTALL ITEM 567.35M FOR BEG. ABUT. JOINT.
INSTALL ITEM 567.35M FOR END ABUT. JOINT.

WORK TO BE DONE:

REPLACE BEGINNING AND END ABUTMENT JOINTS.

ITEMS USED:

ITEM 555.09M - STRUCT. CONCRETE, CLASS "HP" (CM)
ITEM 556.0202M - EPOXY-COATED BAR REINF. FOR STRUCT. (K g)
ITEM 567.35M - MOD. ARM. JOINT SYSTEM W/COMP. SEAL TYPE A-5 (M)
ITEM 18567.46M - ELASTOMERIC CONCRETE FOR BRIDGE JOINT SYSTEMS (M)
ITEM 580.01M - REMOVAL OF STRUCT. CONCRETE (CM)

ALL DIMENSIONS ARE IN mm UNLESS OTHERWISE NOTED

AS BUILT REVISIONS

SIGNATURE DATE

RAMP TO INTERSTATE 481
OVER INTERSTATE 481
BRIDGE JOINT DETAILS

STATE OF NEW YORK
DEPARTMENT OF TRANSPORTATION

FILENAME	REGION	DATE	DRAWING NO.
305613AJJA1	3	10/02	JD-29

DESIGN SUPERVISOR ____ JOB MANAGER ____ DESIGNED BY ____ ESTIMATED BY ____ DRAFTED BY ____ CHECKED BY ____

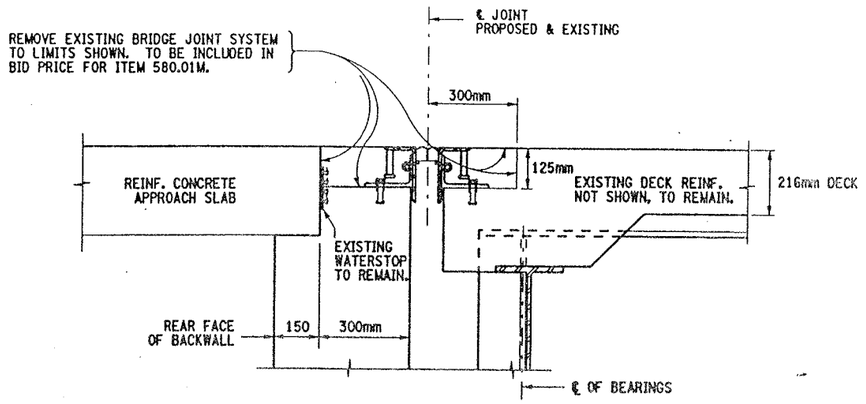

SECTION A-A
EXISTING ABUTMENT JOINT

NOT TO SCALE

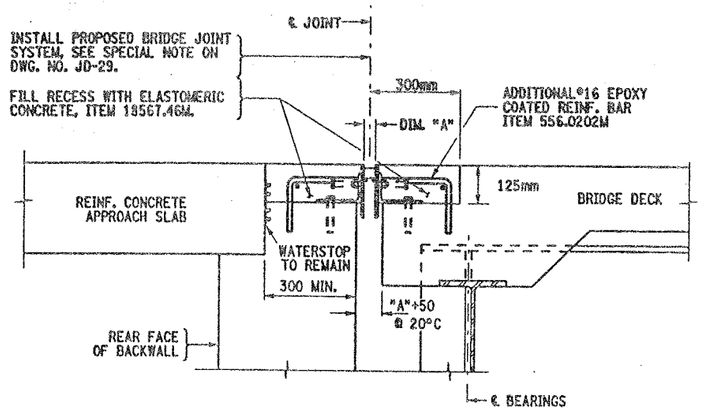

SECTION B-B
PROPOSED ABUTMENT JOINT

NOT TO SCALE

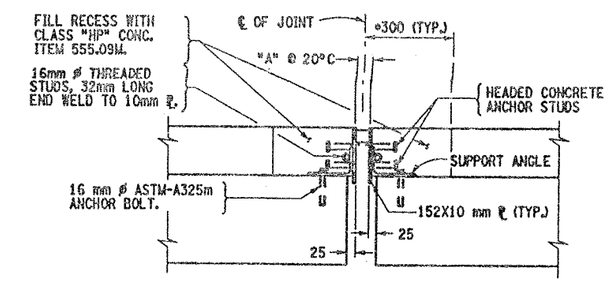

*NO SIDEWALK OR CURB KEY WITHIN THIS AREA.

NOTE:
REINFORCEMENT NOT SHOWN

PROPOSED ABUTMENT JOINT
SECTION E-E

NOT TO SCALE

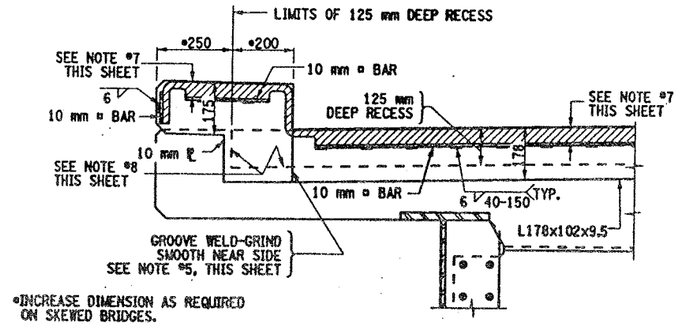

*INCREASE DIMENSION AS REQUIRED ON SKEWED BRIDGES.

PROPOSED ABUTMENT JOINT
SECTION C-C (BRUSH CURB)

NOT TO SCALE

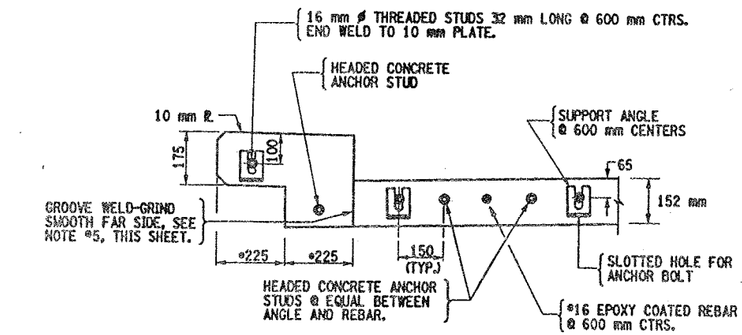

*INCREASE DIMENSION AS REQUIRED ON SKEWED BRIDGES.

PROPOSED ABUTMENT JOINT
SECTION D-D (BRUSH CURB)

(ONLY THE STEEL SHOWN)

NOT TO SCALE

NOTES:

1. ACTUAL BRIDGE JOINT BLOCK-OUT DIMENSIONS MAY VARY. REMOVAL LIMITS SHALL BE TO EXISTING BLOCK-OUT LOCATIONS, AOBE.
2. EXISTING WATERSTOPS SHALL REMAIN.
3. FOR CALCULATION OF "A" DIMENSION REFER TO DWG. NO. JD-1.
4. REFER TO DWG. NO. JD-29 FOR PROPOSED PARTIAL PLAN VIEWS.
5. ALL WELDS SHALL BE GROUND SMOOTH TO THE SATISFACTION OF THE ENGINEER, ON SEAL CONTACT SIDE OF EDGE BEAM.
6. REFER TO DWG. NO. JD-1 FOR PROPOSED JOINT DETAILS AND ALL NOTES SHALL APPLY.
7. THIS DEPTH SHALL BE INDICATED ON THE SHOP DRAWINGS AND SHALL BE SUCH THAT WHEN THE SEAL IS COMPRESSED TO 50% OF ITS NOMINAL WIDTH, THE TOP OF THE SEAL SHALL BE NOT LESS THAN 6 mm NOR MORE THAN 19 mm BELOW THE TOP OF ROADWAY.
8. RECESSES RECEIVING ITEM 555.09M, AFTER SURFACE PREPARATION, THOROUGHLY WET THE CONCRETE SURFACES AND ALL POROUS SURFACES TO BE IN CONTACT WITH NEW CONCRETE FOR 12 HOURS. NOTE, THE USE OF MATERIAL SPECIF. 705-22 PORTLAND CEMENT MORTAR BONDING GROUT HAS BEEN ELIMINATED, (PROJECT PROPOSAL).

ITEMS USED:

ITEM 555.09M - STRUCT. CONCRETE, CLASS "HP" (CM)
ITEM 556.0202M - EPOXY-COATED BAR REINF. FOR STRUCT. (Kg)
ITEM 18567.46M - ELASTOMERIC CONCRETE FOR BRIDGE JOINT SYSTEMS (M)
ITEM 580.01M - REMOVAL OF STRUCT. CONCRETE (CM)

FED ROAD REG. NO.	STATE	CONTRACT NO.	SHEET NO.	TOTAL SHEETS
1	N.Y.	D259214	394	432

BRIDGE REHABILITATION PROJECT (ELEMENT SPECIFIC)
VARIOUS BRIDGES ON INTERSTATE 481
TOWNS OF DEWITT AND CICERO
ONONDAGA COUNTY
P.I.N. 305613 B.I.N. 1072530

ALL DIMENSIONS ARE IN mm UNLESS OTHERWISE NOTED

AS BUILT REVISIONS

SIGNATURE DATE

RAMP TO INTERSTATE 481
OVER INTERSTATE 481
BRIDGE JOINT DETAILS

STATE OF NEW YORK
DEPARTMENT OF TRANSPORTATION

FILENAME	REGION	DATE	DRAWING NO.
305613AJJA1	3	10/02	JD-30

DESIGN SUPERVISOR ____ JOB MANAGER ____ DESIGNED BY ____ CHECKED BY ____ DRAFTED BY ____ ESTIMATED BY ____ CHECKED BY

BIN: 1072530
FROM/TO I90/I481 / I481

DECK DETERIORATION PLAN SPAN 1

NOT TO SCALE

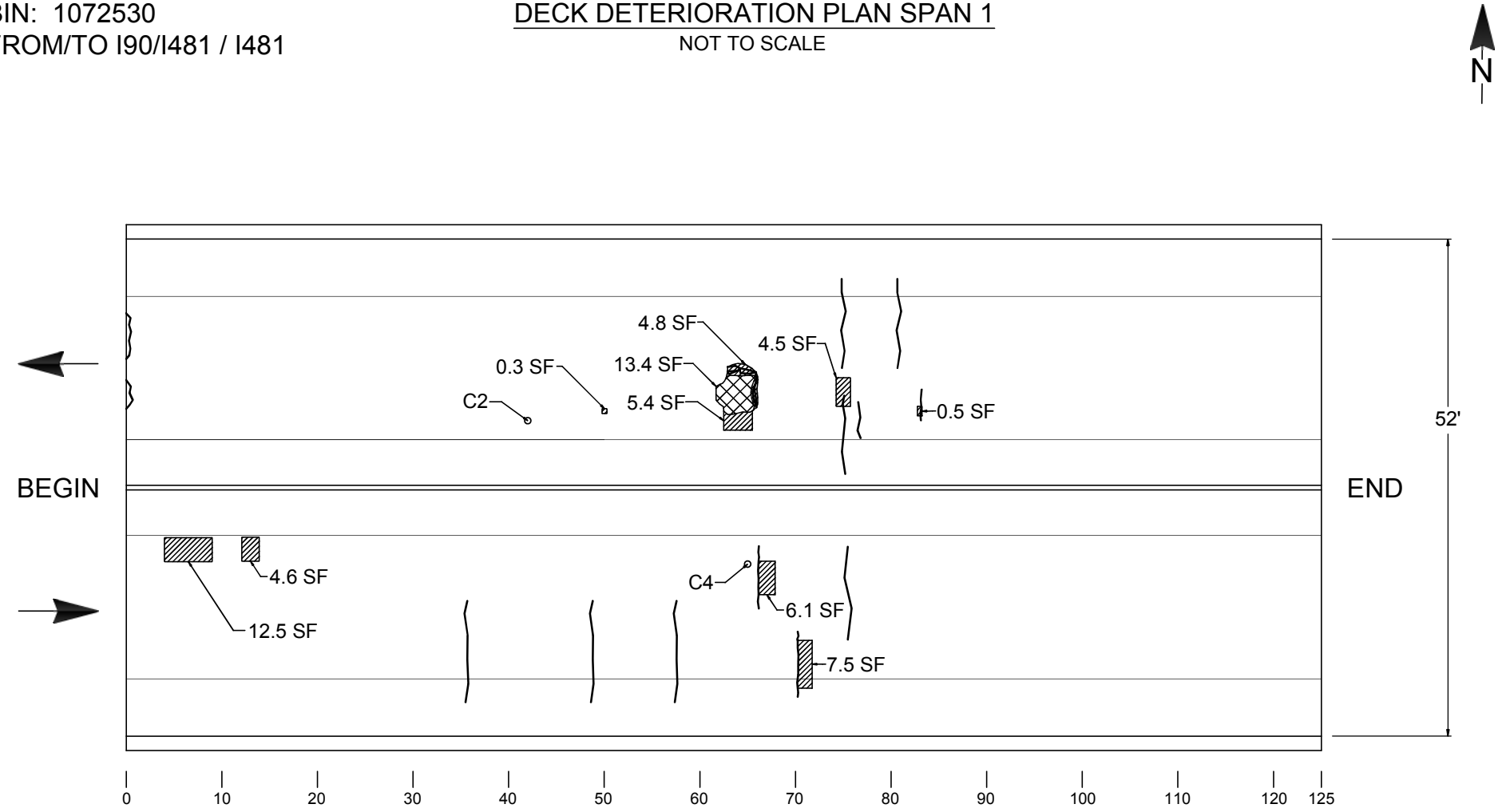

TOTAL DAMAGED AREA FOR SPAN 1 EQUALS 59.6 SF WHICH IS 0.9 % OF DECK SURFACE

TOTAL DAMAGED AREA FOR BRIDGE EQUALS 127 SF WHICH IS 1.1 % OF DECK SURFACE

LEGEND

- Hollow Concrete
- Patch
- Coring location
- Crack

BIN: 1072530
FROM/TO I90/I481 / I481

DECK DETERIORATION PLAN SPAN 2

NOT TO SCALE

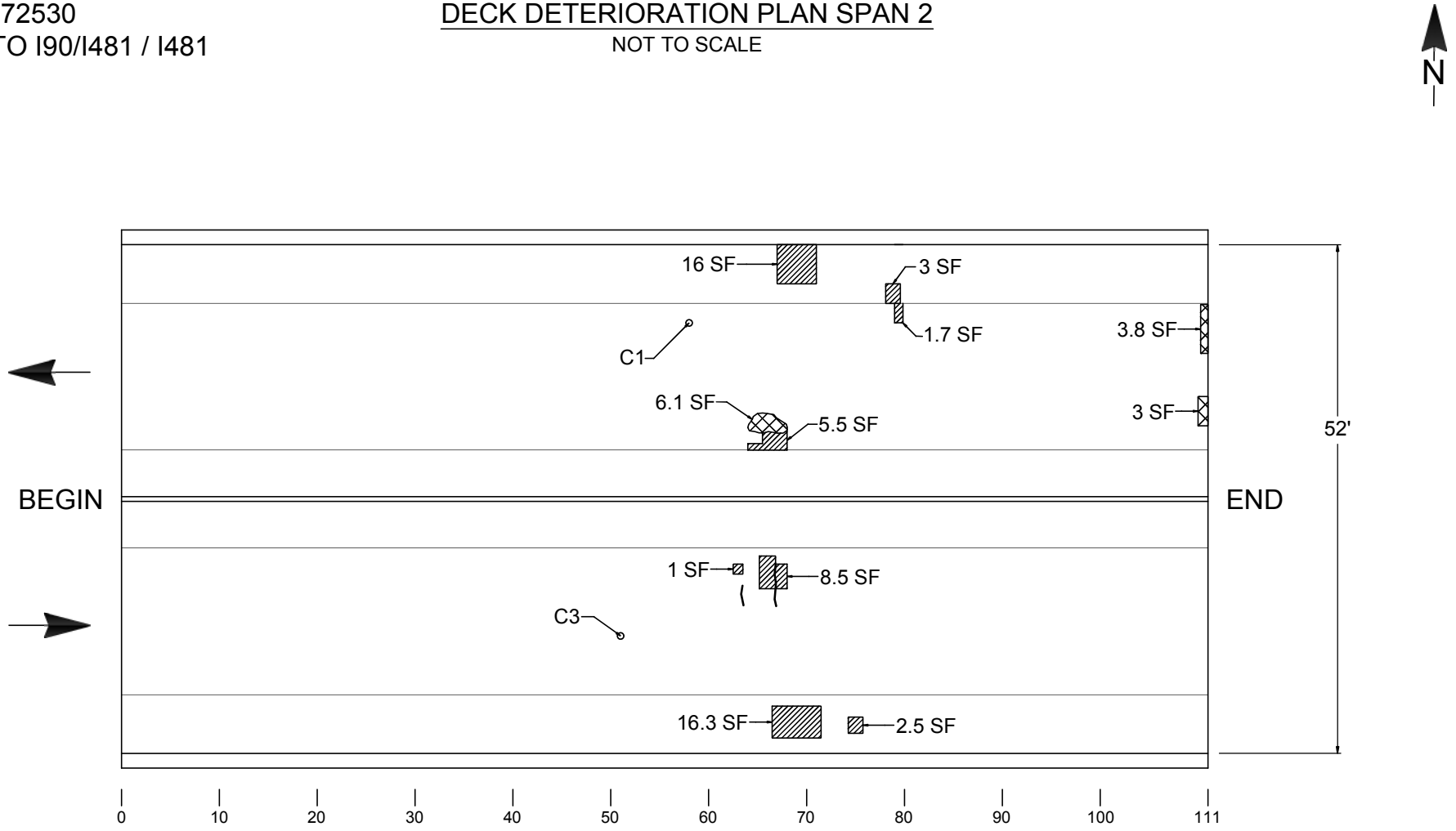

TOTAL DAMAGED AREA FOR SPAN 2 EQUALS 67.4 SF WHICH IS 1.2 % OF DECK SURFACE

TOTAL DAMAGED AREA FOR BRIDGE EQUALS 127 SF WHICH IS 1.1 % OF DECK SURFACE

LEGEND

- Hollow Concrete
- Patch
- Coring location
- Crack

BIN: 1072530
FROM/TO I90/I481 / I481

BEGIN ABUTMENT DETERIORATION SKETCH

NOT TO SCALE

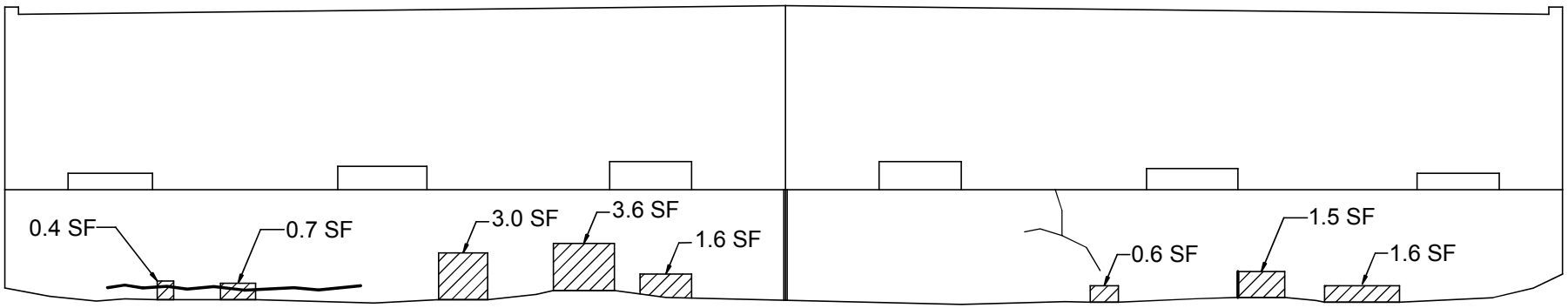

ELEVATION



PLAN

LEGEND
Hollow Concrete
Spall
Crack
Hairline Crack

IN-DEPTH PHOTO DOCUMENTATION

BIN: 1072530
FROM/TO I90/I481 / I481

IN-DEPTH INSPECTION
PHOTO LOCATION PLAN

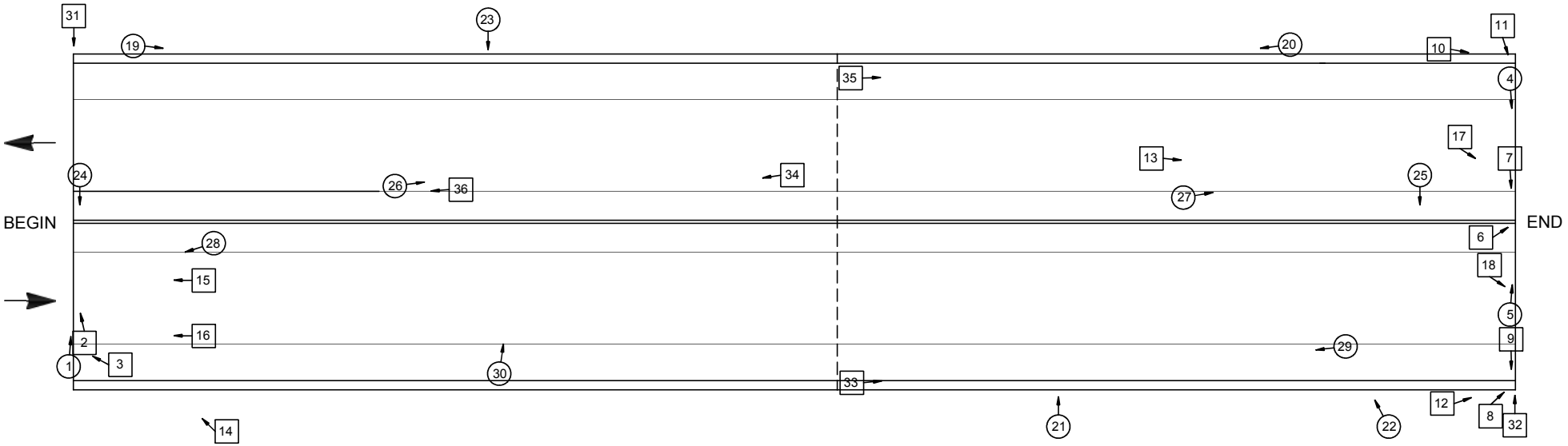

In-Depth Inspection Photos From/To I90/I481 over I481, BIN 1072530



DESCRIPTION: SPAN 1 RIGHT TRAVELWAY BEGIN JOINT (R-L)

PHOTO 1



DESCRIPTION: BEGIN JOINT UNDERSIDE BAY 5 (R-L)

PHOTO 2

In-Depth Inspection Photos From/To I90/I481 over I481, BIN 1072530



DESCRIPTION: BEGIN SEAT BAY 5

PHOTO 3



DESCRIPTION: SPAN 2 LEFT TRAVELWAY END JOINT (L-R)

PHOTO 4

In-Depth Inspection Photos From/To I90/I481 over I481, BIN 1072530



DESCRIPTION: SPAN 2 RIGHT TRAVELWAY END JOINT AT CENTER (R-L)

PHOTO 5



DESCRIPTION: END STEM BAY 3

PHOTO 6

In-Depth Inspection Photos From/To I90/I481 over I481, BIN 1072530



DESCRIPTION: END BEARING 3

PHOTO 7



DESCRIPTION: END STEM AT RIGHT

PHOTO 8



DESCRIPTION: END PEDESTAL 5 LEFT

PHOTO 9



DESCRIPTION: END BACKWALL AT LEFT

PHOTO 10



DESCRIPTION: END BACKWALL TOP LEFT

PHOTO 11



DESCRIPTION: END BACKWALL AT RIGHT

PHOTO 12

In-Depth Inspection Photos From/To I90/I481 over I481, BIN 1072530



DESCRIPTION: END ABUTMENT

PHOTO 13



DESCRIPTION: BEGIN ABUTMENT

PHOTO 14

In-Depth Inspection Photos From/To I90/I481 over I481, BIN 1072530



DESCRIPTION: BEGIN STEM BAY 4

PHOTO 15



DESCRIPTION: BEGIN STEM BAY 5

PHOTO 16

In-Depth Inspection Photos From/To I90/I481 over I481, BIN 1072530



DESCRIPTION: END STEM BAY 2

PHOTO 17



DESCRIPTION: END STEM BAY 4

PHOTO 18

In-Depth Inspection Photos From/To I90/I481 over I481, BIN 1072530



DESCRIPTION: SPAN 1 LEFT FASCIA (B-E)

PHOTO 19



DESCRIPTION: SPAN 2 LEFT FASCIA AT LAST SNOW FENCE POST

PHOTO 20

In-Depth Inspection Photos From/To I90/I481 over I481, BIN 1072530



DESCRIPTION: SPAN 2 RIGHT SNOW FENCE POST 4

PHOTO 21



DESCRIPTION: SPAN 2 RIGHT FASCIA AT 5TH POST FROM END

PHOTO 22

In-Depth Inspection Photos

From/To I90/I481 over I481, BIN 1072530



DESCRIPTION: SPAN 1 LEFT SNOW FENCE POST 6 OF 8

PHOTO 23



DESCRIPTION: SPAN 1 CENTER RAIL POST 1 (L-R)

PHOTO 24

In-Depth Inspection Photos

From/To I90/I481 over I481, BIN 1072530



DESCRIPTION: SPAN 2 CENTER RAILING LAST POST (L-R)

PHOTO 25



DESCRIPTION: SPAN 1 LEFT TRAVELWAY AT MIDSPAN (B-E)

PHOTO 26



DESCRIPTION: SPAN 2 LEFT TRAVELWAY AT MIDSPAN (B-E)

PHOTO 27



DESCRIPTION: SPAN 1 RIGHT TRAVELWAY NEAR BEGIN (E-B)

PHOTO 28



DESCRIPTION: SPAN 2 RIGHT TRAVELWAY RIGHT SHOULDER (E-B)

PHOTO 29



DESCRIPTION: SPAN 1 RIGHT TRAVELWAY NEAR MIDSPAN (R-L)

PHOTO 30

In-Depth Inspection Photos From/To I90/I481 over I481, BIN 1072530



DESCRIPTION: SPAN 1 DECK AT BEGIN LEFT

PHOTO 31



DESCRIPTION: SPAN 2 DECK AT END RIGHT

PHOTO 32

In-Depth Inspection Photos From/To I90/I481 over I481, BIN 1072530



DESCRIPTION: SPAN 2 RIGHT OVERHANG (B-E)

PHOTO 33



DESCRIPTION: SPAN 1 FRAMING FROM END

PHOTO 34

In-Depth Inspection Photos

From/To I90/I481 over I481, BIN 1072530



DESCRIPTION: SPAN 2 GIRDER 1 (B-E)

PHOTO 35



DESCRIPTION: SPAN 1 GIRDER 3 FROM MIDSPAN (E-B)

PHOTO 36

ASBESTOS SAMPLING SURVEY

Asbestos Sampling Survey

Location:

BIN 1072530
Ramp From Interstate Route I-481 & I-90
over Interstate Route I-481

Prepared for:

New York State
Department of Transportation

PIN 3056.13.111

LaBella Project No. 201001

August 2001

Table of Contents

Page

I. Project Summary 1

II. Site Description 1

III. Inspection Procedures 1

IV. Results 2

Certification 2

Figures and Table

I. Project Summary

In accordance with conditions of Term Agreement D012606, LaBella Associates, P.C. conducted an asbestos sampling survey of the ramp from Interstate Route I-481 & I-90 over Interstate Route I-481. Based on laboratory analyses of bulk samples collected, no asbestos-containing materials were identified.

II. Site Description

The Site is located in Onondaga County, New York. For the purpose of this report, the Site consists of the ramp from Interstate Route I-481 & I-90 over Interstate Route I-481. (See attached FIGURE 1 - Site Location Map).

III. Inspection Procedures

The following procedures were used to obtain the data for this Report:

A. A review of record drawings supplied by Region 3 personnel and a visual inspection of the subject structure were conducted to identify potential visible/accessible sources of asbestos-containing materials. Observations and notes were made to provide a description of the structure, and an estimate of the approximate amount, length, or area of ACM present.

B. Physical or operational constraints, which might affect the removal of the ACM, were identified and reported.

C. Bulk samples of suspected ACM were collected during the site inspection of the subject structure. Samples were taken from each homogeneous area that may contain ACM.

D. Samples were submitted for analysis. Preliminary PLM analyses of NOB materials were performed by LaBella Laboratories, a NYSDOH approved laboratory, to determine the presence and percentage of asbestos in each sample. TEM analyses of NOB materials, if necessary, were performed by AMA Analytical, Inc.

E. Lab results were used to determine the approximate location, type, and amount of the verified ACM.

F. A drawing of the structure at the Site was created, in order to show sample locations and the approximate locations and amounts of confirmed ACM observed in accessible locations.

Only accessible areas were inspected. Inaccessible areas, such as areas within the bridge or the approaches to the bridge were not included in this inspection. No investigation was conducted by LaBella Associates to determine the presence of underground utilities on or in the immediate vicinity of the Site. Actual sample locations are shown in the attached FIGURE 2. Results of bulk sample analyses are tabulated in the attached TABLE.

IV. Results

BIN 1072530 Ramp From Interstate Route I-481 & I-90 over Interstate Route I-481

Based on laboratory analyses of bulk samples collected, no asbestos-containing materials were identified.

Certification

LaBella Associates, P.C. certifies the accuracy of this report, to the best of our knowledge, based on the information collected as described in the Inspection Procedures Section of this investigation.

Figures & Table

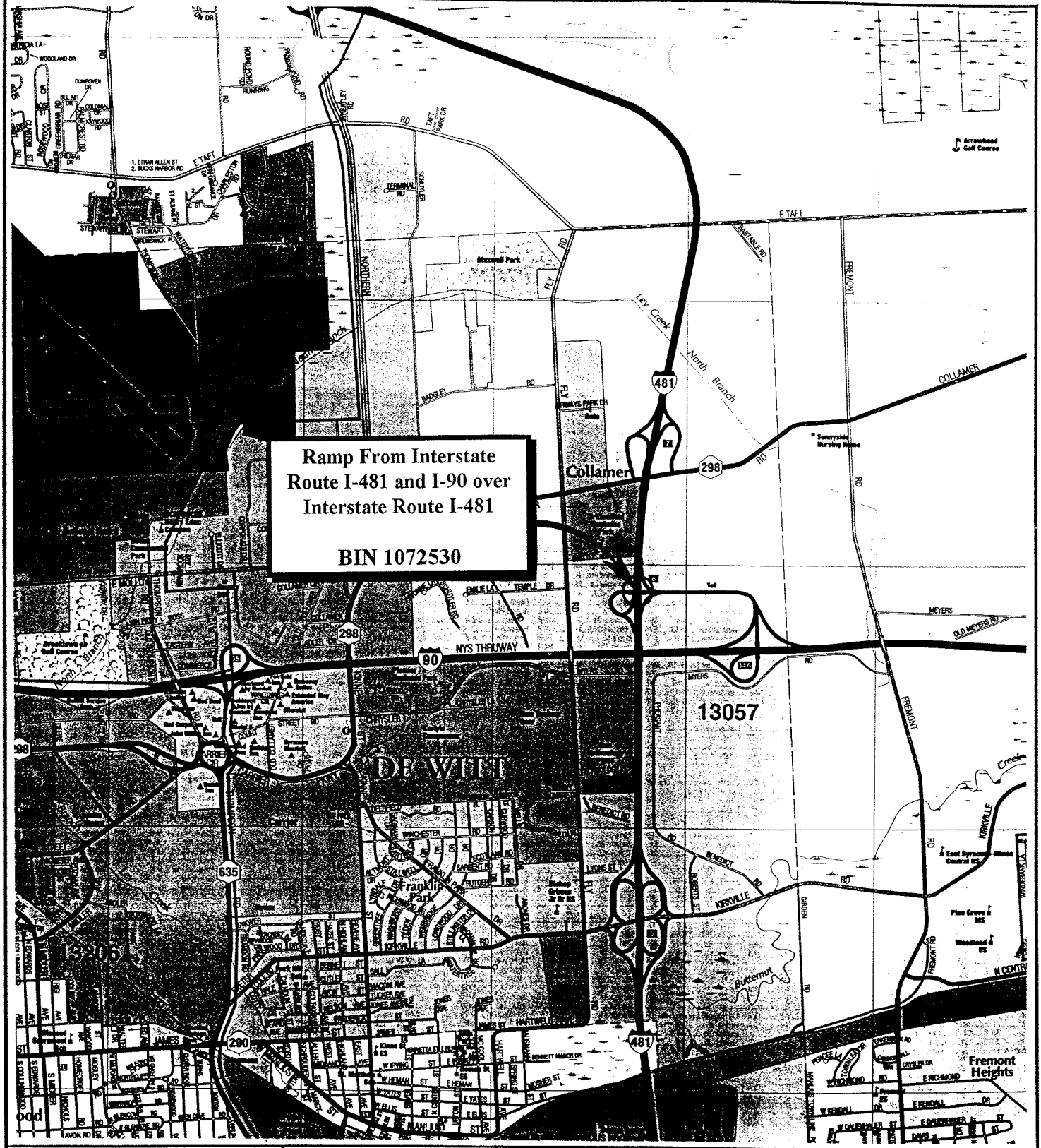

FIGURE 1
Site Location Map

Ramp From Interstate Route I-481 and I-90 over Interstate Route I-481
Onondaga County, New York

LABELLA

PROJECT NO. 201001

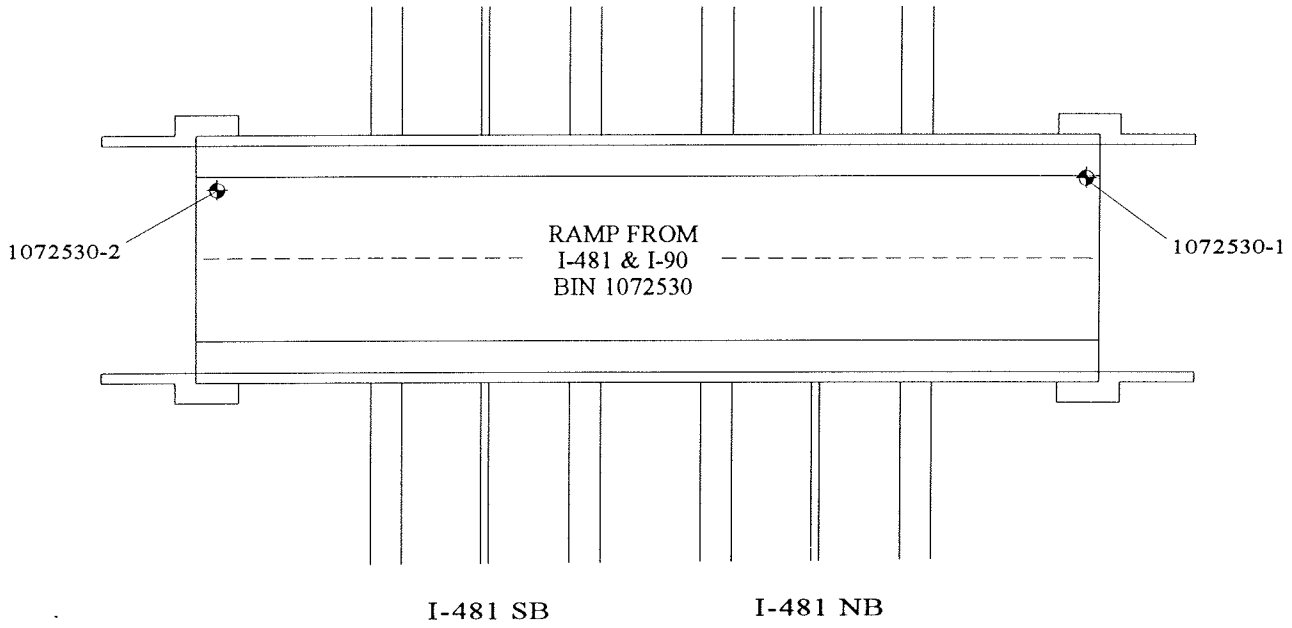

NOTE: NO ASBESTOS-CONTAINING MATERIALS IDENTIFIED.

LEGEND

◆ 1072530-1 SAMPLE LOCATION

NORTH

PROJECT TITLE: ASBESTOS SAMPLING SURVEY 19 BRIDGES ALONG INTERSTATE I-481 ONONDAGA COUNTY, NEW YORK	PROJECT NO. 201001 PIN 3056.13.111
FIGURE TITLE: FIGURE 2 BIN 1072530 RAMP FROM I-481 & I-90 OVER I-481 NB & SB SAMPLE LOCATIONS & CONFIRMED ACM	NOT TO SCALE DATE: AUGUST, 2001

Bulk Sample Results Table

Asbestos Sampling Survey
BIN 1072530
Ramp From Interstate Route I-481 & I-90
over Interstate Route I-481
Onondaga County, New York
LaBella Project # 201001
PIN 3056.13.111

Sample #	Sample Location	Type of Material	Results % Asbestos	Amount of Material	Specification Item No.
1072530-1	East End of Bridge Beneath Bearing	Bearing Pad	None Detected	N/A	N/A
1072530-2	East End of Bridge on Back Wall	Gray Masonry Coating	None Detected	N/A	N/A

LATEST BIENNIAL INSPECTION REPORT

Inspection Date: 6/28/2012 RC: 33 BIN: 1072530

Bridge Ratings

Carried: FROM/TO I90/I481 Crossed: 481I 481I33012091 CheckValue: 1,785,493,430

Inspection Agency: 10 - NYSDOT Type of Inspection: 1 - BIENNIAL
GTMS: B02 -- Unpainted Steel Continuous - Stringer/Multi-Beam or Girder
POSTINGS: See Gen Rec Page 1 for Postings at time of inspection.
Further Investigation Needed: No
State Highway Number: 000000 Milepoint: 0 AADT/Yr: 6084 / 2008
Orientation: 3 - East Political Unit: 0233 - Town of DEWITT Year Built: 1985
Total Spans: 2 Ramp Bridge Attached To Span: NA BIN: NA
General Recommendation: 6 Computed Condition Rating: 5.792

Abutment Ratings:	**Beg Abut**	**End Abut**
Joint with Deck	5	5
Bearings, Bolts, Pads	6	6
Seats and Pedestals	6	6
Backwall	6	6
Stem (Breastwall)	6	6
Erosion or Scour	6	6
Footings	9	9
Piles	8	8
Recommendation	5	5

Wingwall Ratings:	**Beg Abut**	**End Abut**
Walls	5	5
Footings	9	9
Erosion or Scour	6	6
Piles	8	8

Channel Ratings:	**Channel**
Stream Alignment	8
Erosion and Scour	8
Waterway Opening	8
Bank Protection	8

Approach Ratings:	**Approaches**
Drainage	4
Embankment	6
Settlement	6
Erosion	6
Pavement	4
Guide Railing	6

Number of Flags Issued:

RED: 0 Yellow: 0 Safety: 1

Vulnerability Reviews Recommended: 1=Yes, 2=No, 3=NA, X=NotActive

Hydraulic: 3	Overload: X	Steel: 2
Collision: 2	Concrete: X	Seismic: X

Inspector's Signature: CheckValue: 1,785,493,430 Date: 6/28/2012

Peter Riehlman,PE () (Inspector ID:3000052)

Signed copy of this inspection report is available in the appropriate NYSDOT Regional Office

Reviewed By: Date: 8/31/2012

James R. Manning,PE () (QC ID:3000023)

Signed copy of this inspection report is available in the appropriate NYSDOT Regional Office

Inspection Date: 6/28/2012 RC: 33 BIN: 1072530

Span Ratings

Carried: FROM/TO I90/I481 Crossed: 481I 481I33012091 CheckValue: 1,785,493,430

Deck Element Ratings:	001	002
Wearing Surface	5	5
Curbs	4	4
Sidewalks, Fascias	6	6
Railings, Parapets	6	6
Scuppers	8	8
Gratings	8	8
Median	6	6
Mono Deck Surface	5	5

Superstructure Ratings:	001	002
Structural Deck	6	6
Primary Members	6	6
Secondary Members	6	6
Paint	6	6
Joints	8	8
Recommendation	6	6

Pier Ratings:	001	002
Bearings, Bolts, Pads	6	8
Pedestals	6	8
Top of Cap or Beam	6	8
Stem Solid Pier	8	8
Cap Beam	6	8
Pier Columns	6	8
Footings	9	8
Erosion or Scour	6	8
Piles	9	8
Recommendation	6	8

Utility Ratings:	001	002
Lighting	8	8
Sign Structure	6	8
Utilities and Support	8	8

Field Notes:

Field Date	Arrival	Departure	Temp (C)	Temp (F)	Weather Conditions
6/28/2012	8:00:00 AM	10:00:00 AM		70	ptly. cldy.

Inspection Date: 6/28/2012 RC: 33 BIN: 1072530

Inspection Notes

Carried: FROM/TO I90/I481 Crossed: 481I 481I33012091 CheckValue: 1,785,493,430

Note ID: 331210725300000

Beg Abut -- Abutment: Joint with Deck -- Rated 5, Was 3
Referenced Photos: "1"
2012- Joint has minor leakage at this date, rate 5.

Note ID: 331210725300001

Approaches: Drainage -- Rated 4, Was 4
Referenced Photos: "2", "5"
2012- Ponding evident at the following locations
1.beg. right approach and beg. right span 1
2.End right at joint and end left at joint.
3.Beg. left span 1
Also at these locations is sand build up which is preventing proper drainage.
In addition vegetation buildup evident at the beg. in the center area next to guiderail.
I'm downrating approach drainage and curbs as a result of these poor drainage situations.

Note ID: 331210725300004

Approaches: Pavement -- Rated 4, Was 4
Referenced Photos: "3", "5", "7"
2012: Asphalt potholing and concrete breaking up along edge of beginning and end slab adjacent to concrete approach slab.

Note ID: 331210725300002

Span 001 -- Deck Elements: Curbs -- Rated 4, Was 6
Referenced Photos: "2", "8"
2012- Ponding evident at the following locations
1.beg. right approach and beg. right span 1
2.End right at joint and end left at joint.
3.Beg. left span 1
Also at these locations is sand build up which is preventing proper drainage.
In addition vegetation buildup evident at the beg. in the center area next to guiderail.
I'm downrating approach drainage and curbs as a result of these poor drainage situations.

Note ID: 331210725300007

Span 001 -- Superstructure: Primary Members -- Rated 6, Was 6
Referenced Photos: "6"
2012: The mechanical splice is missing for the hand rail at the end of span 1, G2, at the left web splice.

This condition is being Safety Flagged.

Inspection Date: 6/28/2012 RC: 33 BIN: 1072530

Inspection Notes

Carried: FROM/TO I90/I481 Crossed: 481I 481I33012091 CheckValue: 1,785,493,430

Note ID: 331210725300006

Span 002 -- Deck Elements: Wearing Surface -- Rated 5, Was 4
Span 002 -- Deck Elements: Mono Deck Surface -- Rated 5, Was 4
Referenced Photos: "4"
2012-No problems noted as mentioned in 2010 inspection rate 5

Note ID: 331210725300003

Span 002 -- Deck Elements: Curbs -- Rated 4, Was 6
Referenced Photos: "2", "8"
2012- Ponding evident at the following locations
1.beg. right approach and beg. right span 1
2.End right at joint and end left at joint.
3.Beg. left span 1
Also at these locations is sand build up which is preventing proper drainage.
In addition vegetation buildup evident at the beg. in the center area next to guiderail.
I'm downrating approach drainage and curbs as a result of these poor drainage situations.

Inspection Date: 6/28/2012 RC: 33 BIN: 1072530

Inspection Photos in Photo Number Order

Carried: FROM/TO I90/I481 Crossed: 481I 481I33012091 CheckValue: 1,785,493,430

Beg Rt joint looking Lt

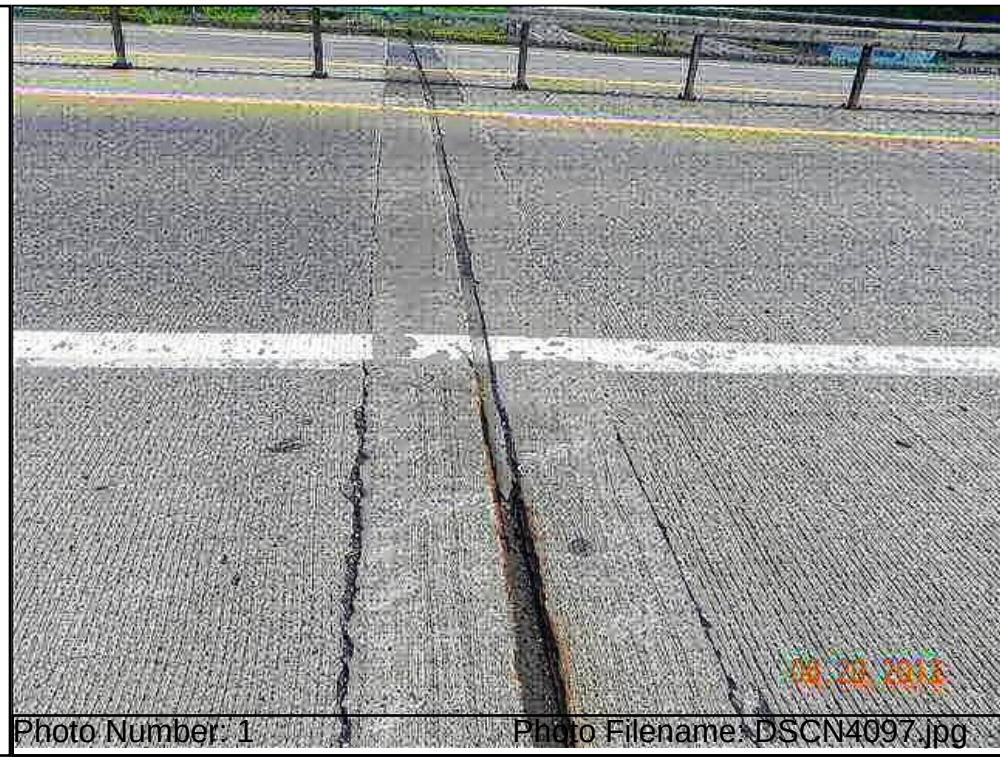

Photo Number: 1 Photo Filename: DSCN4097.jpg

Beg Rt appr drainage looking toward End (typ)



Photo Number: 2 Photo Filename: DSCN4099.jpg

Inspection Date: 6/28/2012 RC: 33 BIN: 1072530

Inspection Photos in Photo Number Order

Carried: FROM/TO I90/I481 Crossed: 481I 481I33012091 CheckValue: 1,785,493,430

Beg appr pavt transition looking Lt



Photo Number: 3 Photo Filename: DSCN4098.jpg

End Sp 2 WS looking Rt



Photo Number: 4 Photo Filename: DSCN4095.jpg

Inspection Date: 6/28/2012 RC: 33 BIN: 1072530

Inspection Photos in Photo Number Order

Carried: FROM/TO I90/I481 Crossed: 481I 481I33012091 CheckValue: 1,785,493,430

Location:
End Rt appr pavt



Photo Number: 5 Photo Filename: DSCN4090.jpg

Sp 1 End G-2 Lt face hand rail



Photo Number: 6 Photo Filename: DSCN4101.jpg

Inspection Date: 6/28/2012 RC: 33 BIN: 1072530

Inspection Photos in Photo Number Order

Carried: FROM/TO I90/I481 Crossed: 481I 481I33012091 CheckValue: 1,785,493,430

Location:
End appr pavt transition looking Lt



Photo Number: 7 Photo Filename: DSCN4088.jpg

Sp 1 Lt curb looking toward Beg (typ)



Photo Number: 8 Photo Filename: DSCN4094.jpg

Inspection Date: 6/28/2012 RC: 33 BIN: 1072530

Inspection Sketches in Sketch SysID Order

Carried: FROM/TO I90/I481 Crossed: 481I 481I33012091 CheckValue: 1,785,493,430

Sketch ID: 331210725300000 Sketch Filename: LdRatNCL.12

General Sketch for Bridge
Referenced Photos:

Region 3 LoadRatingFieldCheckForm

NYSDOT BRIDGE INSPECTION REPORT			
SHEET	1	OF	1

LOAD RATING FIELD CHECK FORM

BIN:	1072530	Insp. Date:	06/29/2012

Dead Load - Note Changes since Last load Rating or state "NONE":

NONE

Section Loss -Note Changes since Last load Rating or state "NONE":

NONE

Additional Notes:

NONE

Attachments:

Team Leader: Peter Riehlman

Inspection Date: 6/28/2012 RC: 33 BIN: 1072530

Gen. Rec., Postings, Federal Ratings, etc.

Carried: FROM/TO I90/I481 Crossed: 481I 481I33012091 CheckValue: 1,785,493,430

Overall Condition:

GENERAL RECOMMENDATION: 6

Computed Condition Rating: 5.792

Problems Requiring Action:

NO Further Investigation Needed

SAFETY Flag(s) Issued

POSTINGS:

Inspector Confirmed existing Posting data as correct.
Posted Vertical Clearance ON the bridge is: No Posting
Posted Vertical Clearance UNDER the bridge is: No Posting
No Load Restriction is posted on this bridge

Overloads Observed:

NO Overload Vehicles were observed on this bridge

FEDERAL RATINGS:

NBI Deck Condition: 8
NBI Superstruct Condition: 8
NBI Substruct Condition: 8
NBI Channel Condition: N
NBI Culvert Condition: N

Diving Inspection Needs:

Diving Inspection Required? No Date of Last Diving Inspection: No Date

Inventory Problems:

Inventory Problems Exist? No

Miscellaneous:

Time Required to Inspect Bridge: 2 Hours

Lane Closure Needs: None Required

No Railroad Flagging Required

No Pedestrian Fence

There is a Snow Fence present

The BIN Plate is in OK condition

Inspection Date: 6/28/2012 RC: 33 BIN: 1072530

Gen. Rec., Postings, Federal Ratings, etc.

Carried: FROM/TO I90/I481 Crossed: 481I 481I33012091 CheckValue: 1,785,493,430

Special Emphasis Inspection Required:

Non-Redundant/Fracture Critical Members - No
Pin and Hangers - No
Fatigue-Prone Welds - No
Non-Categorized Fatigue-Prone Details - No
Other (Specified in Text) - No

Special Emphasis Details:

No Special Emphasis Inspection Required.

General Notes To the Next Inspector:

Improvements Observed:

Inspection Date: 6/28/2012 RC: 33 BIN: 1072530

Review Progress and Personnel Present at Inspection

Carried: FROM/TO I90/I481 Crossed: 481I 481I33012091 CheckValue: 1,785,493,430

Inspection Submission Status:

Submitted to QC Engineer on: 8/28/2012
QC Submission Number: 35320802

QC Review Completed: 8/31/2012
QC Engineer: James R. Manning

Submitted to Liaison Engineer on: 8/31/2012
Liaison Submission Number: 53220

Liaison Review Completed: 9/4/2012
Liaison Engineer: TODD M. HERMANN

Submitted for BIIS Processing on: 9/5/2012
BIIS Submission Number: .kp1

Current Status: Keypunched, Sent to BIIS
Check Value: 1,785,493,430

Personnel Present During Inspection:

Peter Riehlman - Team Leader
Rebecca Maurer - Assistant Team Leader

Discovery Date: 6/29/2012 RC: 33 BIN: 1072530

Safety Flag 33120015

Carried: FROM/TO I90/I481 Crossed: 481I 481I33012091

Prompt Interim Action Recommended: No

Inspector: Riehlman, Peter
Date Discovered: 6/29/2012
Flag Number: 33120015
Supersedes Flag Number: 32100018

Bridge Description:
BIN: 1072530 Carried: FROM/TO I90/I481 Crossed: 481I 481I33012091

Region: 3 - Syracuse County: 3 - Onondaga
Political Unit: 0233 - Town of DEWITT
Residency Code: - N/A
Primary Owner: 10 - State Department of Transportation
Secondary Owner: 99 - One Agency - Listed in first subfield
Primary Maintenance: 10 - State - Highway Maintenance
Secondary Maintenance: 99 - One Agency - Listed in first subfield
Year Built: 1985 Not Posted For Load

Number of Spans by Type:

Num	Type	Description
002	213	Weathering Steel - Plate Girder, Multi-Girder

Bridge is wholly or partially owned or maintained by NYSDOT.

Description of Flagged Condition:
Oriented East TP 350 Item 28 Primary member rate 6

The mechanical splice is missing for the hand rail at the end of span 1, G2, at the left web splice.

1 Photos/Sketches Attached

Verbal Notifications: (For RED Flags and Safety Flags with PIA only)

To: _____ of Regional Office on _____ at _____

Signature: (a signed copy of this report will be placed in the BIN folder)
Flagged Bridge Report Completed By: Riehlman, Peter on 6/29/2012
Flagged Bridge Report Signed By: _____ on _____
Riehlman, Peter

(This PDF Report Created: 9/6/2012 5:28:50 PM)

Discovery Date: 6/29/2012 **RC: 33 BIN: 1072530**

Safety Flag 33120015 Attachment

Carried: FROM/TO I90/I481 Crossed: 481I 481I33012091

DSCN4101.jpg - Attached to Safety Flag 33120015

End of span 1 broken handrail

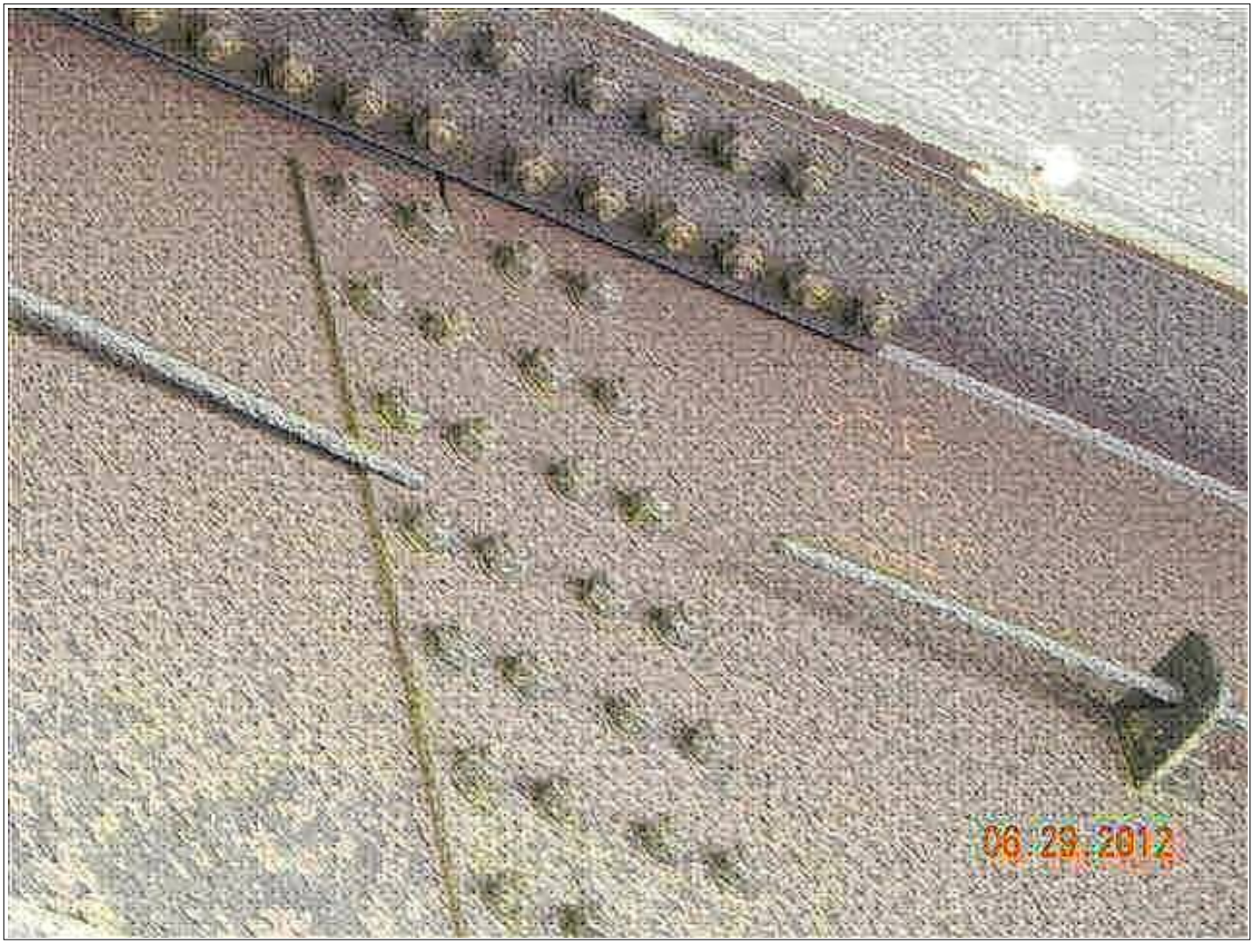

Inspection Date: 6/28/2012 RC: 33 BIN: 1072530

Inspection Access Requirements

Carried: FROM/TO I90/I481 Crossed: 481I 481I33012091 CheckValue: 1,785,493,430

Equipment Required for Inspection

Access Requirement Changes WERE Noted During This Inspection.
This Listing is from the Inspection.

ACCESS CATEGORIES FOR ENTIRE BRIDGE
Required: Walking, Extension Ladder

ACCESS CATEGORIES FOR SPAN 1
Required: Walking, Extension Ladder

ACCESS CATEGORIES FOR SPAN 2
Required: Walking, Extension Ladder

Inspection Date: 6/28/2012 RC: 33 BIN: 1072530

Culvert Measurements

Carried: FROM/TO I90/I481 Crossed: 481I 481I33012091 CheckValue: 1,785,493,430

Culvert Measurements

NO CULVERT DATA FOR BIN 1072530

Standard Photos **RC: 33 BIN: 1072530**

Carried: FROM/TO I90/I481 Crossed: 481I 481I33012091

1072530_LOCATION_MAP.JPG

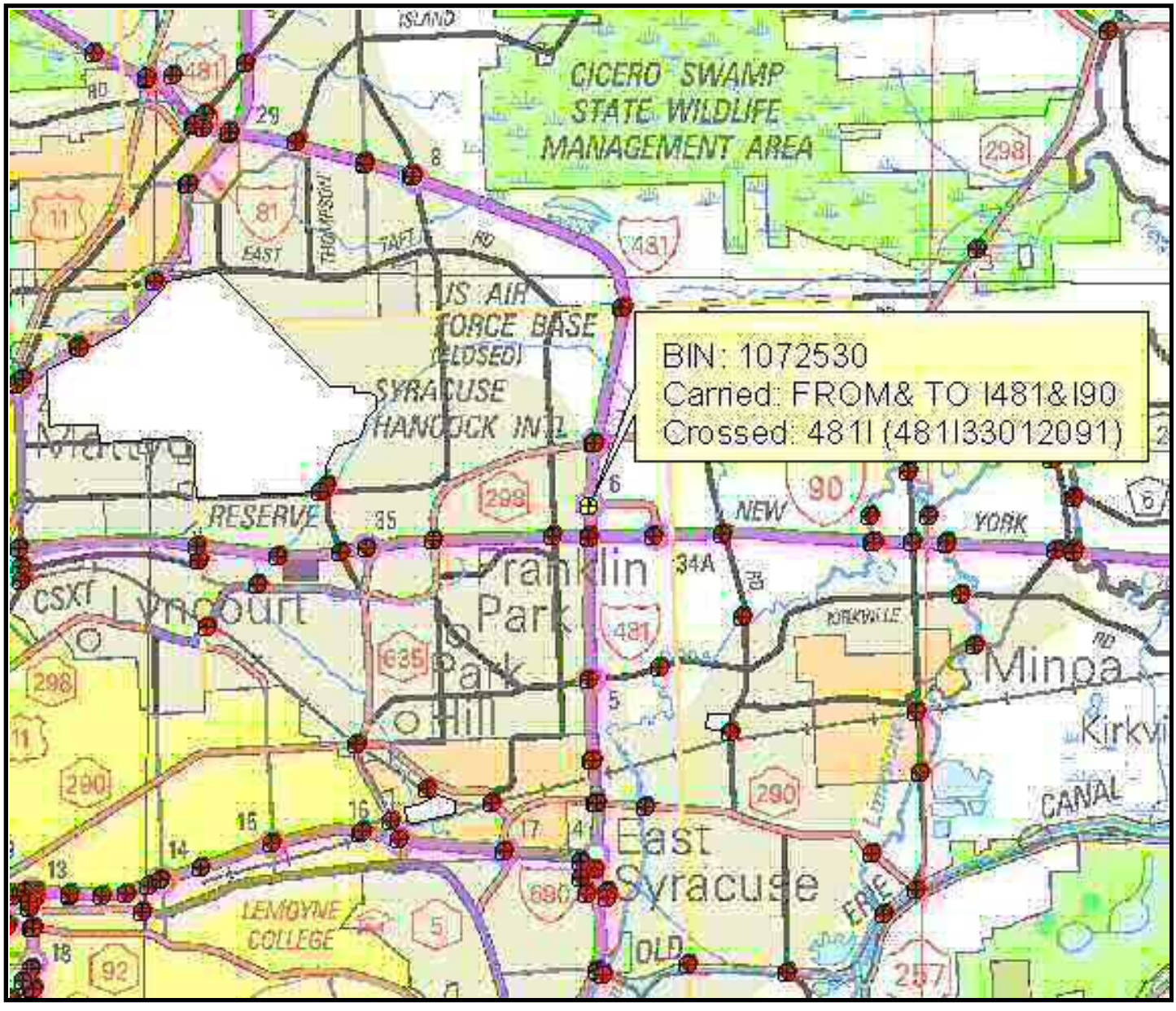

Standard Photos **RC: 33 BIN: 1072530**

Carried: FROM/TO I90/I481 Crossed: 481I 481I33012091

1072530_QUAD_MAP.JPG

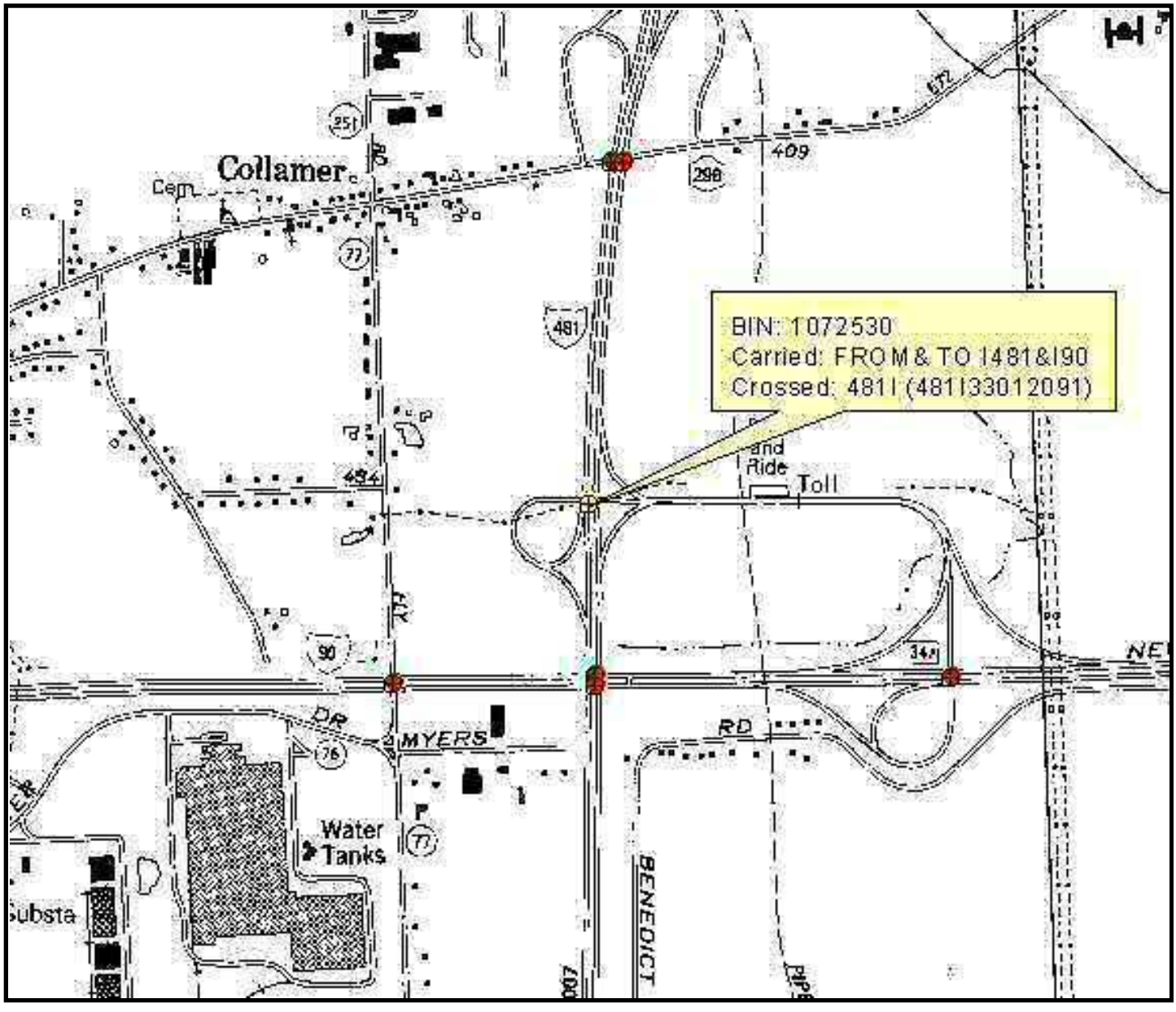

Standard Photos **RC: 33 BIN: 1072530**

Carried: FROM/TO I90/I481 **Crossed: 481I 481I33012091**

AbutmentEnd.12.jpg



Standard Photos **RC: 33 BIN: 1072530**

Carried: FROM/TO I90/I481 Crossed: 481I 481I33012091

ApproachBegin.12.jpg



Standard Photos **RC: 33 BIN: 1072530**

Carried: FROM/TO I90/I481 **Crossed: 481I 481I33012091**

ApproachEnd.12.jpg



Standard Photos RC: 33 BIN: 1072530

Carried: FROM/TO I90/I481 Crossed: 481I 481I33012091

ElevationSpan1&2.12.jpg



Standard Photos **RC: 33 BIN: 1072530**

Carried: FROM/TO I90/I481 Crossed: 481I 481I33012091

F2CrossedSpan1&2Left.12.jpg



Standard Photos **RC: 33 BIN: 1072530**

Carried: FROM/TO I90/I481 Crossed: 481I 481I33012091

F2CrossedSpan1&2Right.12.jpg



Standard Photos **RC: 33 BIN: 1072530**

Carried: FROM/TO I90/I481 Crossed: 481I 481I33012091

FramingSpan2.12.jpg



Standard Photos **RC: 33 BIN: 1072530**

Carried: FROM/TO I90/I481 **Crossed: 481I 481I33012091**

Pier1.12.jpg



LEVEL 1 LOAD RATING SUMMARY SHEET

Region/County Region 3/Onondaga BIN 1072530
Feature(s) Carried and Crossed From/to I-481/I-90 / I-481
Date of field inspection upon which Level 1 rating is based 2/6/2014

OVERALL BRIDGE RATINGS (BASED ON LOWEST RATED ELEMENTS):

Total number of rating units 1

	H inventory	H operating	HS inventory	HS operating
Rating	H 27.59 (tons)	H 46.08 (tons)	HS 49.67 (tons)	HS 82.95 (tons)
Lowest rated element	Interior Girders G2 and G5	Interior Girders G2 and G5	Interior Girders G2 and G5	Interior Girders G2 and G5

Analysis method LFR Comments

Individual Rating Unit Level 1 values:

Rating unit span(s) 1

Main member ratings

	H inventory	H operating	HS inventory	HS operating
Rating	H (tons)	H (tons)	HS (tons)	HS (tons)
Lowest rated element				

Analysis method Comments

Floorbeam ratings

	H inventory	H operating	HS inventory	HS operating
Rating	H (tons)	H (tons)	HS (tons)	HS (tons)
Lowest rated element				

Analysis method Comments

Stringer ratings

	H inventory	H operating	HS inventory	HS operating
Rating	H 27.59 (tons)	H 46.08 (tons)	HS 49.67 (tons)	HS 82.95 (tons)
Lowest rated element	Interior Girders G2 and G5	Interior Girders G2 and G5	Interior Girders G2 and G5	Interior Girders G2 and G5

Analysis method LFR Comments

Certified by Date

Quality Control Engineer Signature Date
Agency or Company represented by certifier

Note:
-If connection ratings govern, record them under stringer ratings for stringer – floorbeam connection, floorbeam ratings for floorbeam-main member connections, etc.
-When Level 1 results indicated the need for load posting or other corrective action, the NYSDOT Regional Structures Engineer shall be notified immediately.
-Load ratings should be filed in the regional office within 60 days of completion of calculations.
-Bridges shall be flagged based on Level I results in accordance with the current NYSDOT flagging procedure.
-Bridge load posting, closure, etc. determinations shall be made as results are being produced.

PARSONS

100 Broadway
New York, NY 10005
Phone: 212-266-8300
Fax: 212-571-6825
www.parsons.com

TECHNICAL MEMORANDUM

FROM: Kian Siang Chau, P.E
NYSPE 082744

DATE: MARCH 25, 2014

RE: SEISMIC SCREENING SUMMARY
NEW YORK STATE DEPARTMENT OF TRANSPORTATION
D031085; PIN 3501.60; I-81

BIN: 1072530 (I-90/I-481 over I-481)

This memorandum summarizes the seismic screening conducted for BIN 1072530 as part of the Interstate 81 Project in Syracuse, NY. The purpose of the screening is to determine if seismic retrofits are warranted at the superstructure to substructure connection, and if further seismic evaluation of the structure is required. This memorandum will give the screening results, retrofits required and recommendations for further seismic evaluation of the structure.

SCREENING PROCEDURE

The seismic screening was performed in accordance with the FHWA Seismic Retrofitting Manual for Highway Structures: Part 1 - Bridges, January 2006. As per the referenced manual, seismic screenings were performed for both lower level and upper level earthquake ground motion. The lower level earthquake ground motion has a reasonable likelihood of occurrence within the life of the bridge (50% probability of exceedance within a 75 year bridge life). The upper level earthquake ground motion has a finite likelihood of occurrence within the life of the bridge (7% probability of exceedance within a 75 year bridge life).

Values for the spectral acceleration for the Syracuse area used in the screening are as follows:

- Lower Level Earthquake Ground Motion for a Short Period (0.2 seconds): $S_S = 0.0251$
- Lower Level Earthquake Ground Motion for a Long Period (1.0 seconds): $S_1 = 0.0076$
- Upper Level Earthquake Ground Motion for a Short Period (0.2 seconds): $S_S = 0.139$
- Upper Level Earthquake Ground Motion for a Long Period (1.0 seconds): $S_1 = 0.047$

These values are considered constant and are the same for all seismic screenings of bridges in the Syracuse area.

The Site Class is based on the soil conditions at the bridge location. It was determined that this parameter has little effect on the results of the seismic screening because the spectral acceleration values for the Syracuse area are small. Based on this, a site class of D was used for all seismic screenings of bridges in the Syracuse area.

Bridge parameters used in the seismic screening were retrieved from the record drawings and WinBolts data.

The seismic screening takes into account the anticipated service life, importance, and the seismic exposure of the bridge to determine a seismic retrofit category (SRC). The SRC is then used to determine seismic evaluation methods and retrofit measures. There are four SRCs, A through D. Seismic retrofit category A is the lowest category; bridges in this category do not require retrofits or further seismic evaluation. Seismic retrofit category D is the highest category; bridges in this category requiring the most rigorous seismic evaluations and retrofits.

SCREENING RESULTS

The SRC for the bridge is "**C**" for lower level earthquake ground motion and "**B**" for upper level earthquake ground motion.

RETROFITS REQUIRED

Seat width improvements are required at (Begin and End abutments). Additional retrofits may be required if further seismic evaluation is needed.

RECOMMENDATIONS FOR FURTHER SEISMIC EVALUATION

For the lower level earthquake ground motion, it is recommended that capacity/demand ratios for bridge components are calculated as per Section 5.4 of the referenced manual. For the upper level earthquake ground motion, it is recommended that the capacities of the bearings are checked as per Section 5.2 of the referenced manual.

Retrofit cost estimates will be provided after any further required seismic evaluations are completed.

BRIDGE DECK EVALUATION REPORT

RECOMMENDATIONS

The bridge deck inspection findings and evaluation are used as a tool for developing the scope of work and cost estimates for the development and comparison of alternatives for the overall project.

The total damaged area of the deck is 0.9% in Span 1 and 1.2% in Span 2. The cores indicate the reinforcement steel is 2.75 inches to 3.5 inches below the surface of the deck. The lab test indicates that chloride ion concentrations at all the sample locations are significantly higher than the corrosion threshold for steel.

Due to the age, condition and high chloride ion content of the bridge deck concrete, the bridge deck should be rehabilitated or replaced to meet the current standards and to mitigate excessive future maintenance costs.

ALTERNATIVES

- Rehabilitation Alternative - 3 inches Bonded Concrete Overlay
  - Scope

    The scope of this alternative will include the complete removal of the bridge railings, curb and safety walks, and fascias to the level of the original top of the deck. The joint will be removed. The top 2 inches of the entire deck will be removed and areas of deteriorated concrete must be removed to at least 1 inch below the level of the reinforcement steel and to the horizontal and vertical limit of any detectable hollow areas. Additionally, any further areas of deteriorated concrete detected will require full depth removal. Any corrosion of the reinforcement steel will be removed by sandblasting or hydro-blasting. The proposed deck overlay will be a 3 inches thick bonded concrete overlay yielding a nominal 9.5 inches standard thickness deck. A new single-sloped concrete barrier and a new armorless joint will be installed. The Level 1 Load Rating for the final condition was found to be acceptable.

- Useful Life Expectancy

  The removal of the top 2 inches of the existing deck will remove a portion of the deck with high chloride ion concentrations. It can be anticipated that chloride ions will continue to migrate into the remaining deck to the reinforcing steel resulting in further corrosion-related deterioration of the deck surface. Concrete admixtures will be included in the bonded concrete overlay to impede the continued penetration of chloride into the deck from the surface. This alternative will result in an extended useful life expectancy estimated at 20 years.

The design life of the project is 30 years (ETC + 30). This alternative does not meet the project objectives of obtaining 30 years of service life and is not evaluated further.

- Rehabilitation Alternative – 100% Deep Removal and Partial Deck Reconstruction
  - Scope

    The scope of this alternative will include the complete removal of the bridge railings, curb and safety walks, and fascias to the level of the original top of the deck. The joint will be removed. The scope of this alternative will include partial depth reconstruction with removal of the concrete to at least 1 inch below the top mat of the reinforcement steel. Additionally, any further areas of deteriorated concrete detected will require full depth removal. Any corrosion of the reinforcement steel will be removed by sandblasting or hydro-blasting. Due to the condition of the deck, full depth removal is not likely and not included in the cost estimate. The proposed deck partial reconstruction will be a nominal 5.75 inches thick concrete deck yielding a 9.5 inches standard thickness deck. A new single-sloped concrete barrier, a new median barrier, and a new armorless joint will be installed. The Level 1 Load Rating for the final condition was found to be acceptable.
  - Useful Life Expectancy

    This alternative will provide a useful life expectancy is estimated at 35 years.
  - Cost Estimate

    The estimated cost for this alternative is $952,000. The Engineer's Opinion of Probable Construction Cost worksheet is at the end of this section.

- Replacement Alternative – Cast-In-Place Concrete
  - Scope

    This scope of this alternative will include the complete demolition of the existing bridge deck, bridge railings, curb and safety walks, fascias and bridge joint. The bridge deck will be replaced with a new 9.5 inches standard thickness concrete deck. A new single-sloped concrete barrier, a new median barrier, and a new armorless joint will be installed. The Level 1 Load Rating for the final condition was found to be acceptable.
  - Useful Life Expectancy

    This alternative will provide a useful life expectancy is estimated at 40+ years.
  - Cost Estimate

    The estimated cost for this alternative is $1,332,000. The Engineer's Opinion of Probable Construction Cost worksheet is at the end of this section.

- Replacement Alternative – Pre-cast Concrete Deck Panels
  - Scope

    The scope of this alternative is similar to the Cast-In-Place Concrete Deck Replacement Alternative except the deck structure will be precast panels. This alternative offers reduced construction time over conventional construction.
  - Useful Life Expectancy

    This alternative will provide a useful life expectancy is estimated at 40+ years.
  - Cost Estimate

    The comparison of accelerated construction to conventional construction is beyond the current scope of this evaluation.

IN-DEPTH INSPECTION REPORT

D031085 P.I.N. 3501.60

ELEMENT SPECIFIC BRIDGE WORK

B.I.N. 1072571

TEAM LEADER Andrew P. Thompson 84914
NYSPE LICENSE #

ASSISTANT TEAM LEADER Mike Savino

FEATURE CARRIED I-481 Southbound

FEATURE CROSSED Route 298

DATE FIELD WORK BEGAN 12/18/13

DATE FIELD WORK COMPLETED 2/18/14

TABLE OF CONTENTS

- STRUCTURE IDENTIFICATION
- INTRODUCTION
- PROJECT LOCATION MAP
- IN-DEPTH CONDITION DOCUMENTATION
- PLANS & SKETCHES
- IN-DEPTH PHOTO DOCUMENTATION
- ASBESTOS SAMPLING SURVEY
- LATEST BIENNIAL INSPECTION REPORT

STRUCTURE IDENTIFICATION

a. Bridge Identification Number (BIN): 1072571
b. Reference Marker: 481I 3301 2096
c. Region: NYSDOT Region 3
d. County: Onondaga
e. Town: Dewitt
f. Feature Carried: I-481 Southbound
g. Feature Crossed: Route 298

INTRODUCTION

a. Bridge History
   i. Year Built: 1985
   ii. Bridge Type: Single Span, Steel Multi-girder
   iii. Span Length: 145 feet
   iv. Out-to-Out Width: 49 feet
   v. Structural Ratings and Rankings
      1. Federal Sufficiency: 97.3 (April 2012)
      2. Condition Rating: 5.578 (April 2012)
      3. General Recommendation: 6
   vi. Live Load Posting (HS25): No
   vii. National Highway System (NHS): Yes
   viii. Previous work Done: Waterproof bridge deck (1999). Joints replaced, misc. abutment repairs & repave approaches (2006). Curb repairs (2007).
   ix. Planned Future Work: N/A
b. Highway Classification
   i. Functional Classification: Urban Principle Arterial - Interstate
   ii. Traffic Volumes

YEAR	AADT Projected
2014	17118
2034	25436
2054	37796

   iii. Plan for Maintenance and Protection of Traffic:
   Maintenance and Protection of traffic will be achieved by staged construction.

PROJECT LOCATION MAP

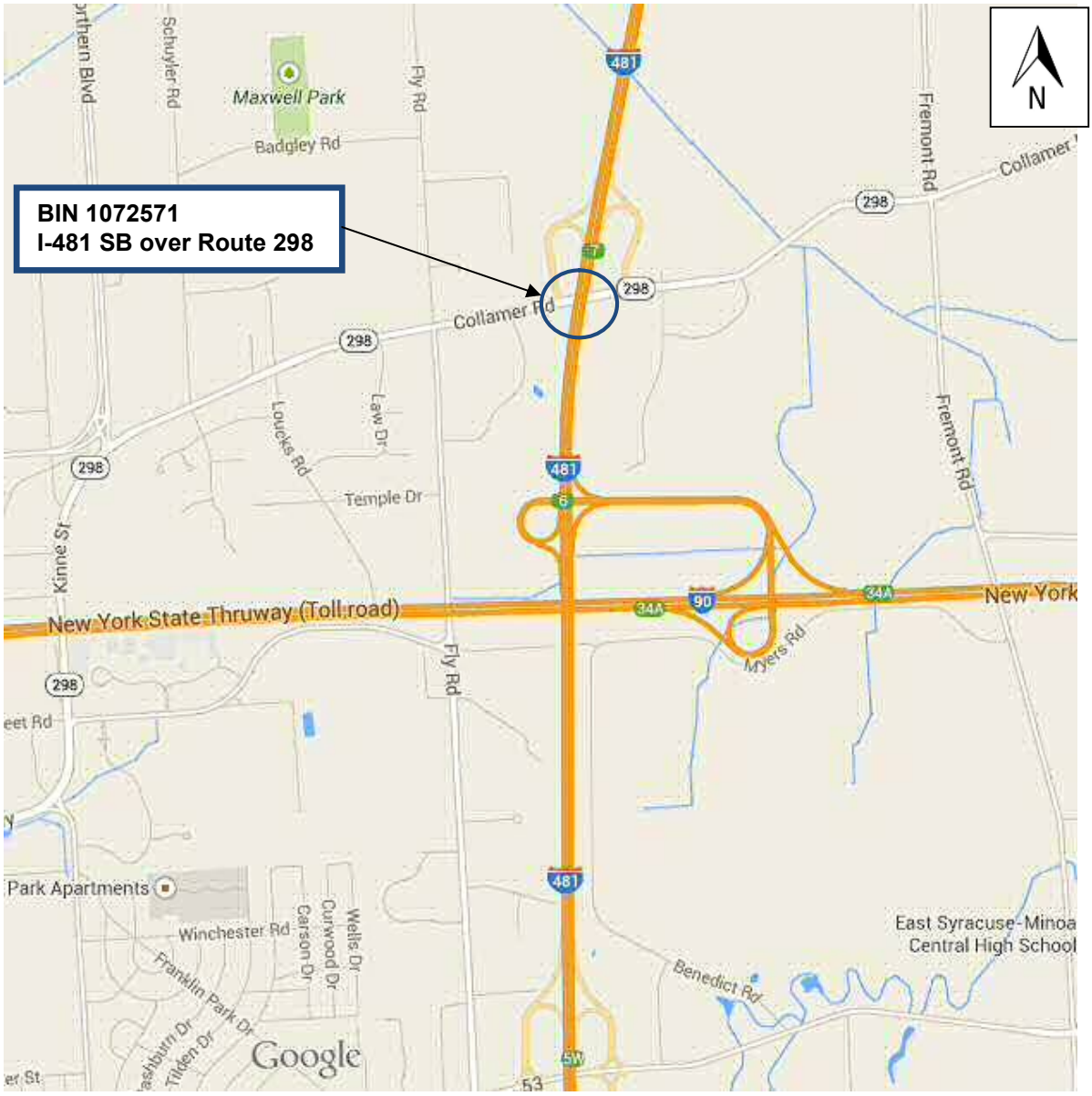

IN-DEPTH CONDITION DOCUMENTATION

NYS DEPT. OF TRANSPORTATION BRIDGE **BIN** 1072571 **SHEET:** 1 **OF** 4 **DATE:** 2/18/2014

FEATURE CARRIED: I-481 SB
FEATURE CROSSED: ROUTE 298

TEAM LEADER: A.THOMPSON
A. TEAM LEADER: M. SAVINO

ITEM	REMARKS	PHOTO N0.
TP 349-22	Begin Abutment - Joint with Deck: The begin joint is expansion. The compression seal appears to be in fair condition. There is a full length (10" long) hairline crack in the end header near the right side of the center lane (Photo 1). Otherwise, the headers are in good condition. Active leakage was noted below (Photo 2).	1,2
TP 349-26	Begin Abutment – Seats and Pedestals: There is a spall in the Bay 4 seat at the right front corner measuring 2.5’ x 9” x 3” deep with exposed rebar (Photo 3). There is a 1 sf adjacent area that is hollow sounding. There is 1/8” wide cracking and a 0.75 sf hollow area in the Bay 5 seat at the left (Photo 4). The right face of Pedestal 5 has a 0.5 sf hollow area. The remainder of the seats and pedestals are in good condition.	3,4
TP 349-27	End Abutment – Seats and Pedestals: The seats have some hairline to 1/32” wide cracking. The worst is in Bay 2 at the right (Photo 5). No hollow areas were noted. The pedestals have some hairline cracking on their vertical faces with no hollowness.	5
TP 349-28	Begin Abutment – Backwall: There is a 2’ wide x 6” hollow area at the top in Bay 2 (Photo 6). There is a 1 sf x 2” deep spall at the top right with exposed rebar (Photo 7). The remainder of the backwall has some hairline cracking and rust staining.	6,7
TP 349-30	Begin Abutment – Stem: There is a 2.5’ long x 7” high x 3” deep top corner spall with exposed rebar in Bay 4 (Photo 3). A 4” height below the spall is hollow. There are (3) hollow areas below Bay 5 totaling 8 sf (Photo 8). Bays 1 and 3 have horizontal cracking within 6” of the seat but the concrete sounded solid (Photo 9). The remainder of the stem is in good condition (Photo 10).	3, 8-10
TP 349-31	End Abutment – Stem: There is a 1.5’ high x 7” wide hollow area in Bay 1 at mid-height (Photo 11). The remainder of the stem surface has some hairline to 1/32” wide cracking which extends into the seat (Photos 5 and 12).	5,11,12

ITEM	REMARKS	PHOTO N0.
TP 350-20	Deck Elements - Curbs: The right concrete curb is in good condition. The left granite curb is displaced from the safety walk in several locations. (2) curb sections are separated 3”+/- at the joint located near Rail Post 8 of 15 (Photo 13). The curb sections are not separated at their other ends. Three other locations have a similar condition. The joint located between Rail Posts 5 and 6 has 1.75” separation at the end only (Photo 14). The joint located between Rail Posts 9 and 10 has 1.5” separation at the begin and 1” separation at the end (Photo 15). The joint located at Rail Post 11 has 1.75” separation at the begin and 1” separation at the end (Photo 16). No curbs have fallen into the travel lanes. The remainder of the left granite curb is in good condition with a few locations of missing grout.	14-16
TP 350-21	Deck Elements - Sidewalks and Fascias: Sidewalks: The left safety walk has light map cracking over most of its length but sounds solid (Photo 16). The right safety walk is in good condition.	16
	Fascias: Both fascias have map cracking throughout with no hollow sounding areas (Photo 17).	17
TP 350-22	Deck Elements – Railings/Parapets The bridge railing and posts are in good condition. Snow fencing is present over the travel lanes on both sides of the bridge. The snow fence consists of 7 steel pipe posts located at rail posts, steel pipe rails, and chain link fencing. On the left the bottom pipe rail at Post 3 is rusted through and detached on the end side (Photo 17). The bottom rails at Posts 2, 4, and 5 are rusted but intact. On the right the bottom pipe rails at Posts 3-6 are rusted through and detached on one or both sides. The bottom rails at Post 2 are rusted but intact. The remainder of the snow fencing is in good condition.	17
TP 350-27	Superstructure – Structural Deck The structural deck is an 8.5" thick concrete mono deck with SIP forms. There is a 3' long 1/8" wide crack at the begin in the right portion of the center lane with a 15” x 3" x 1" deep spall along it (Photo 1). There are (3) hollow areas as shown in the Deck Deterioration Plan (Photo 18). The right lane has scattered hairline cracking. Overall, 0.4% of the deck is hollow. The deck has SIP forms, and the underside is exposed only at the overhangs. The overhangs have hairline cracking at +/-2’ spacing throughout (Photo 19). The SIP forms are in good condition except for a 2’ length missing in Bay 2 near the end (Photo 20).	1, 18-20

FEATURE CARRIED: I-481 SB
FEATURE CROSSED: ROUTE 298

TEAM LEADER: A.THOMPSON
A. TEAM LEADER: M. SAVINO

ITEM	REMARKS	PHOTO N0.
TP 350-28	Superstructure – Primary Members: The steel girders are in good condition with no significant section loss (Photo 21 and 22).	21,22
TP 350-30	Superstructure – Paint: The girders are made of weathering steel and form a protective coating. The bottom face of the right fascia girder bottom flange is losing its coating in the form of medium sized flakes on the outside 3” (Photo 21). The remainder of the steel on all of the girders has only minor peppering with locations of small flaking (Photo 22).	21,22

NYS DEPT. OF
TRANSPORTATION BRIDGE

BIN 1072571

SHEET: 4 OF 4
DATE: 2/18/2014

FEATURE CARRIED: I-481 SB
FEATURE CROSSED: ROUTE 298

TEAM LEADER: A.THOMPSON
A. TEAM LEADER: M. SAVINO

ITEM	REMARKS	PHOTO N0.
	Special Emphasis Inspection Required Non-Redundant/Fracture Critical Members - No Pin and Hangers - No Fatigue-Prone Welds - No Non-Categorized Fatigue-Prone Details - No Other - No	

PLANS & SKETCHES

D2500

FED. AID PROJ. NO.	STATE	FEDERAL AID PROJECT NO.	SHEET NO.
	NEW YORK	I-481-2(18)3.22	4.21

INTERSTATE RTE. 481 EXTENSION (I-481) COLLAMER INTERCHANGE TO NORTHERN BLVD. ONONDAGA COUNTY

CAPITAL PROJECT IDENTIFICATION NO. 3L0.22

PTR 1992

Kim 03/22/94

Dan 3/1

J Durling

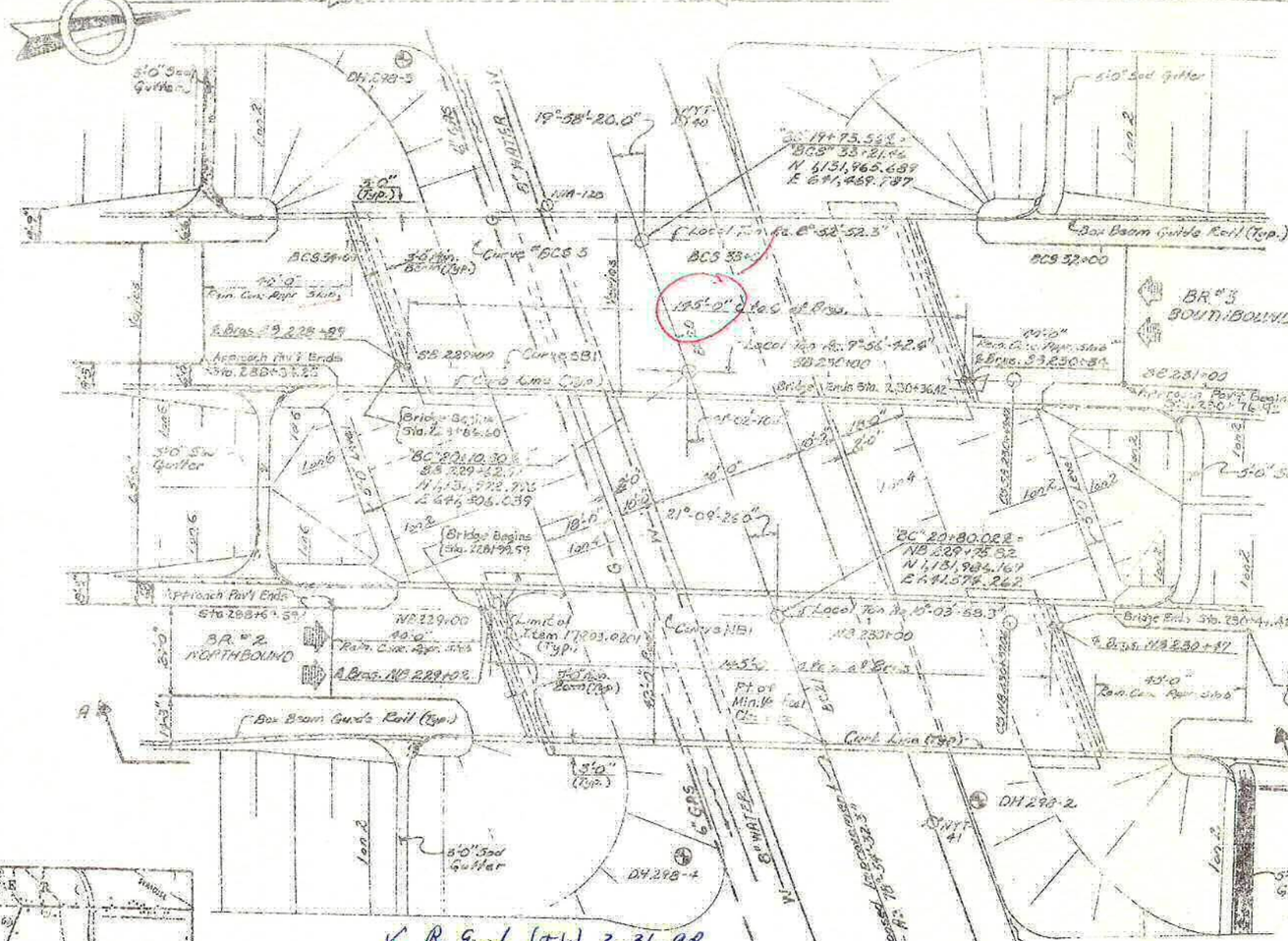

D250094

FED. NO. REG. NO.	STATE	FEDERAL AID PROJECT NO.	SHEET NO.	TOTAL SHEET
	NEW YORK	I-481-2(382)	249	312

INTERSTATE RTE. 571 EXTENSION (I-481)
COLLAMER INTERCHANGE TO NORTHERN BLVD.
ONONDAGA COUNTY

CAPITAL PROJECT IDENTIFICATION NO. 3107.00

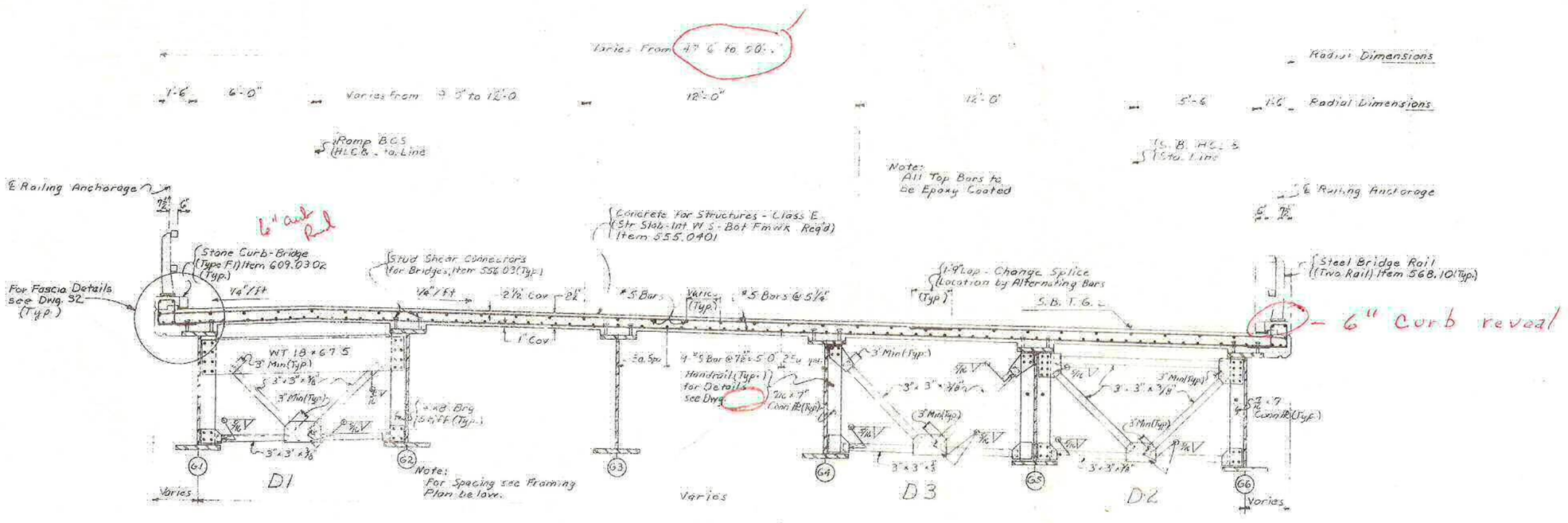
Varies From 47'-6" to 50'-0"
Radial Dimensions
1'-6"
6'-0"
Varies from 9'-5" to 12'-0"
12'-0"
12'-0"
5'-6"
1'-6"
Radial Dimensions
℄ Ramp B.C.S. (H.L.C. &) to Line
℄ S.B. H.L.S. (Sta.) Line
Note: All Top Bars to be Epoxy Coated
℄ Railing Anchorage
℄ Railing Anchorage
6" curb Rel
Concrete for Structures - Class E (Str. Slab-Int. W.S.-Bot. Fmwk. Req'd) Item 555.0401
Stone Curb-Bridge (Type F1) Item 609.0302 (Typ.)
Stud Shear Connectors (for Bridges) Item 556.03 (Typ.)
For Fascia Details see Dwg. 32 (Typ.)
1'-9" Lap - Change Splice Location by Alternating Bars (Typ.)
Steel Bridge Rail (Two Rail) Item 568.10 (Typ.)
S.B.T.G.
6" Curb Reveal
WT 18 x 67.5
3" Min. (Typ.)
3" x 3" x 1/2"
3" x 3" x 7/16"
3" Min. (Typ.)
3" x 3" x 3/8"
3" Min. (Typ.)
3" x 3" x 1/2"
3" x 3" x 7/16"
3" Min. (Typ.)
3" x 3" x 3/8"
3" Min. (Typ.)
3" x 3" x 7/16

FED. AID PROJ. NO.	STATE	FEDERAL AID PROJECT NO.	SHEET NO.
	NEW YORK	I-481-2(52)	245

INTERSTATE RTE. 481 EXTENSION (I-481)
COLLAMER INTERCHANGE TO NORTHERN BLVD.
ONONDAGA COUNTY

CAPITAL PROJECT IDENTIFICATION NO. 3107.0

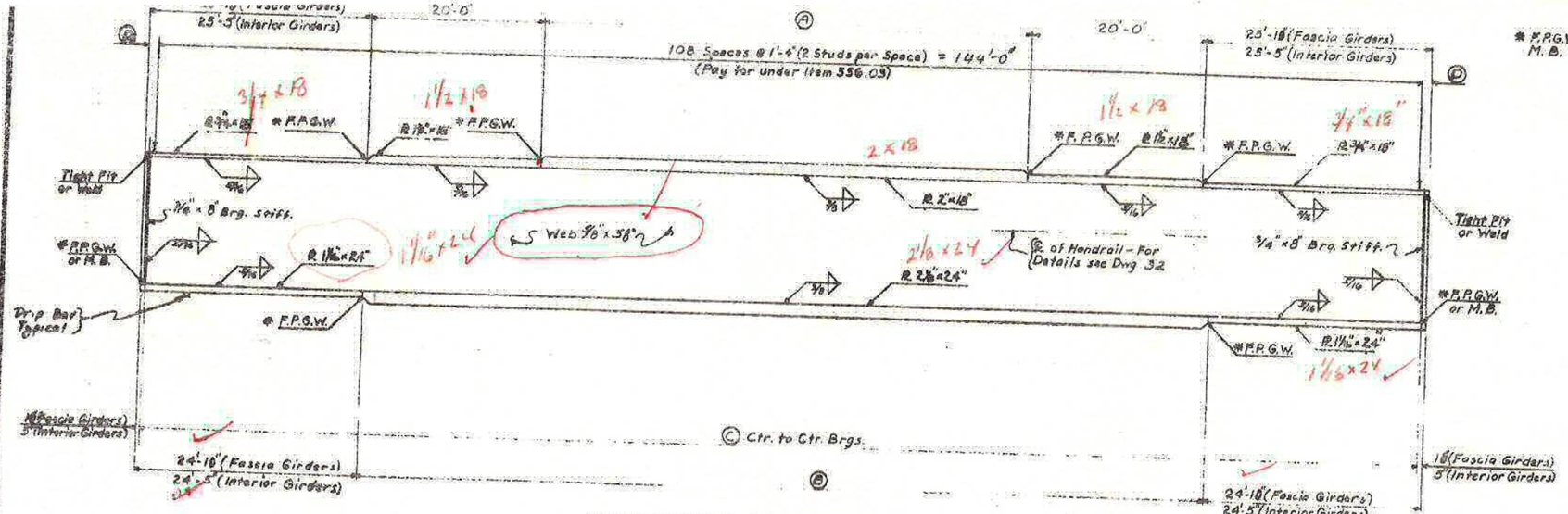

SOUTH BOUND GIRDER DETAIL
N.T.S.

Welding Notes
* F.P.G.W. = Full Penetration Groove Weld
M.B. = Mill to Bear

GIRDER TABLE

Girder	A	B	C	D
1	55'-11 7/8"	95'-11 7/8"	145'-11 7/8"	0'-9 15/16"
2	54'-2 1/4"	96'-2 1/4"	144'-2 1/4"	0'-6 1/8"
3	54'-4 1/16"	96'-4 1/16"	144'-4 1/16"	0'-7 5/16"
4	54'-7 1/8"	96'-7 1/8"	144'-7 1/16"	0'-8 9/16"
5	54'-9 5/8"	96'-9 5/8"	144'-9 5/8"	0'-9 13/16"
6	55'-0 1/16"	97'-0 1/16"	145'-0 1/16"	1'-4"

HAUNCH TABLE
SOUTH BOUND

		℄ Brgs. S.Adjt.	1/4 PT	MID PT	3/4 PT	℄ Brgs. N.Adjt.
GIRDER 1	(A) Req'd bottom of Slab Elevation	441.86	441.63	441.37	441.07	4
	(B) Top of Steel El. (Field Meas.)					
	(C) = (A) - (B)					
	(D) Concrete + S.D.L. Deflection	0	0.37	0.50	0.37	
	(E) Depth of Haunch required = (C) + (D) (Ft)					
GIRDER 2	(A) Req'd bottom of Slab Elevation	441.88	441.64	441.37	441.07	44
	(B) Top of Steel El. (Field Meas.)					
	(C) = (A) - (B)					
	(D) Concrete + S.D.L. Deflection	0	0.37	0.50	0.37	
	(E) Depth of Haunch required = (C) + (D) (Ft)					
GIRDER 3	(A) Req'd bottom of Slab Elevation	441.68	441.43	441.15	440.85	440
	(B) Top of Steel El. (Field Meas.)					
	(C) = (A) - (B)					
	(D) Concrete + S.D.L. Deflection	0	0.37	0.50	0.37	
	(E) Depth of Haunch required = (C) + (D) (Ft)					
GIRDER 4	(A) Req'd bottom of Slab Elevation	441.47	441.22	440.94	440.63	440
	(B) Top of Steel El. (Field Meas.)					
	(C) = (A) - (B)					
	(D) Concrete + S.D.L. Deflection	0	0.37	0.50	0.37	
	(E) Depth of Haunch required = (C) + (D) (Ft)					
GIRDER 5	(A) Req'd bottom of Slab Elevation	441.27	441.01	440.72	440.40	440
	(B) Top of Steel El. (Field Meas.)					
	(C) = (A) - (B)					
	(D) Concrete + S.D.L. Deflection	0	0.37	0.50	0.37	0
	(E) Depth of Haunch required = (C) + (D) (Ft)					
GIRDER 6	(A) Req'd bottom of Slab Elevation	441.07	440.80	440.51	440.18	439
	(B) Top of Steel El. (Field Meas.)					
	(C) = (A) - (B)					
	(D) Concrete + S.D.L. Deflection	0	0.37	0.50	0.37	0
	(E) Depth of Haunch required = (C) + (D) (Ft)					

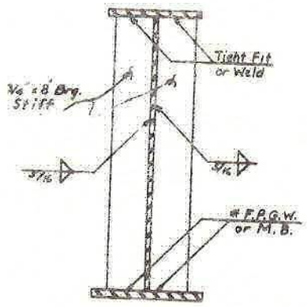

BRG. STIFF.

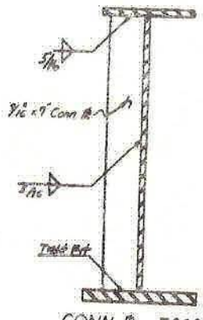

CONN. ℄ - FASCIA GIRDER

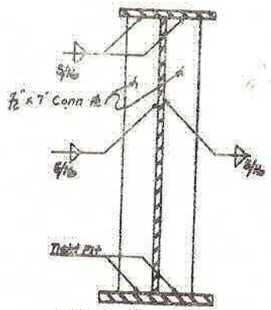

CONN. ℄ - INTERIOR GIRDER

GIRDER SECTIONS
N.T.S.

CAMBER TABLE

SOUTH BOUND		1/4 PT	MID PT	3/4 PT
GIRDERS 1 THRU 6	(A) Vertical Curve (Ft.)	.045	.060	.045
	(B) Steel D.L. (Ft.)	.105	.140	.105
	(C) Concrete D.L. (Ft.)	.296	.394	.296
	(D) Superimposed D.L. (Ft.)	.077	.103	.077
	Total (Ft.)	.523	.697	.523

CAMBER NOTES

The total camber as tabulated is assumed to be measured vertically to the top of full camber web from a straight line drawn from the intersection of top of web and centerline of bearings at one end of the girder to the intersection of top of web and centerline of bearings at the other end of the girder.

The camber labeled "Vertical Curve" in the table is the camber required in the girder to cause the girder to follow the vertical curve.

The camber labeled "Steel D.L." in the table is the camber required in the girder to offset the deflection due to the dead load weight of the steel in the girder.

The camber labeled "Concrete D.L." in the table is the camber required in the girder to offset the deflection due to the dead load weight of the concrete slab.

The camber labeled "Superimposed D.L." in the table is the camber required in the girder to offset the deflection due to the weight of the superimposed dead load, that is, the curb, sidewalk, railing and future wearing surface

Cambers listed in the table as positive are upward cambers.

Cambers listed in the table as negative are downward cambers.

The cambers are tabulated in decimals of a foot.

DESIGN LOAD TABLE/GIRDER

	UNIT	LOAD/FT
DL	Slab	1.009 K/Ft.
	Haunch	0.047 K/Ft.
	Girder	0.344 K/Ft.
	S.I.P. Forms	0.132 K/Ft.
	Diaphragms	0.030 K/Ft.
	Total	1.562 K/Ft.
SDL	Safety Walks	0.020 K/Ft.
	Future Parapet	0.167 K/Ft.
	Future W. S.	0.165 K/Ft.
	Total	0.352 K/Ft.

MOMENT & SHEAR TABLE

			℄ BRGS	MID SPAN
GIRDERS 1 THRU 6	DL	MOMENT	0	4165
		SHEAR	114.9	0
	SDL	MOMENT	0	1023
		SHEAR	28.2	0
	LL (+)	MOMENT	0	2380
		SHEAR	74.1	0

Live Load Moments and Shears include Impact.
Moments are expressed as foot-kip
Shears are expressed as kips.

Notes
For Handrail Details see Dwg. 32.
For Stud Shear Connector Details see Dwg.
All Structural Steel to be unpainted
ASTM A588
Clip Flanges at ends of Fascia Girder
See Detail Dwg 32
For Drip Bar Details See Dwg 33

STATE OF NEW YORK
DEPARTMENT OF TRANSPORTATION
DIVISION OF DESIGN AND CONSTRUCTION

INTERSTATE ROUTE 481
BRIDGES NO. 2(N.B.) AND 3 (S.B.)
OVER ROUTE 298

S.B. - GIRDER DETAILS

DESIGNED BY
DRAWN BY
CHECKED BY
DATE 9/30/91

3/3 1072571

D259214

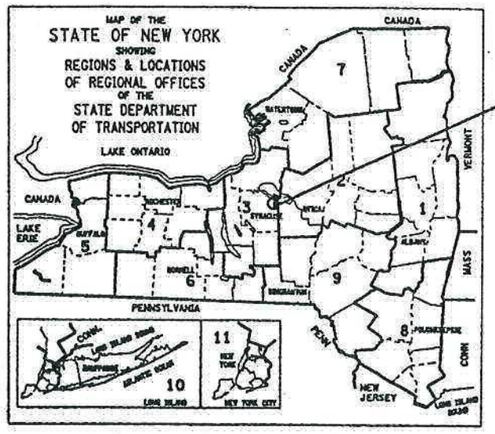

PROJECT LOCATION

THIS IS A BRIDGE REHABILITATION PROJECT ON VARIOUS BRIDGES ON INTERSTATE 481, LOCATED IN THE TOWNS OF CICERO AND DEWITT IN ONONDAGA COUNTY. THIS WORK CONSISTS OF BRIDGE JOINTS, BEARINGS, BRIDGE RAIL AND CONCRETE REPAIR OF SUBSTRUCTURES. THERE ARE 28 BRIDGES IN THE PROJECT BEGINNING AT REFERENCE MARKER 4811-3301-1000 SOUTH OF THE CITY OF SYRACUSE AND ENDING AT REFERENCE MARKER 4811-3301-2143. I481 INTERCHANGE NORTH OF THE CITY.

STATE OF NEW YORK
DEPARTMENT OF TRANSPORTATION
OFFICE OF ENGINEERING

BRIDGE REHABILITATION PROJECT (ELEMENT SPECIFIC)
VARIOUS BRIDGES ON INTERSTATE 481
TOWNS OF DEWITT AND CICERO

VOLUME 1 OF 2

432 SHEETS ONONDAGA COUNTY CONTRACT D259214

F.A. PROJECT

STANDARD SHEETS

M203-4, M203-5, M203-6R1, M603-1
M606-32, M606-33, M606-34,
M619-3R1, M619-4, M619-5
M685-1, M685-2R1, M685-3R1
M685-4R1, M685-5R1, M403-1, M203-4,
M203-5, M203-6R1, M603-1

V Boselka 4/12/04
F Ruth 4/9/04
4/4/12

ALL WORK CONTEMPLATED UNDER THIS CONTRACT IS TO BE COVERED BY AND IN CONFORMITY WITH THE STANDARD SPECIFICATIONS (METRIC UNITS) OF JANUARY 2, 2002, AS AMENDED BY ADDENDA NOS. 1 AND 2, EXCEPT AS MODIFIED ON THESE PLANS AND IN THE ITEMIZED PROPOSAL.

CONTRACTOR'S NAME_____
AWARD DATE_____
COMPLETION DATE_____
FINAL ACCEPTANCE DATE_____
REGIONAL DIRECTOR_____
ENGINEER IN CHARGE_____
FINAL COST TOTAL_____

FISCAL SHARE	COST(S)

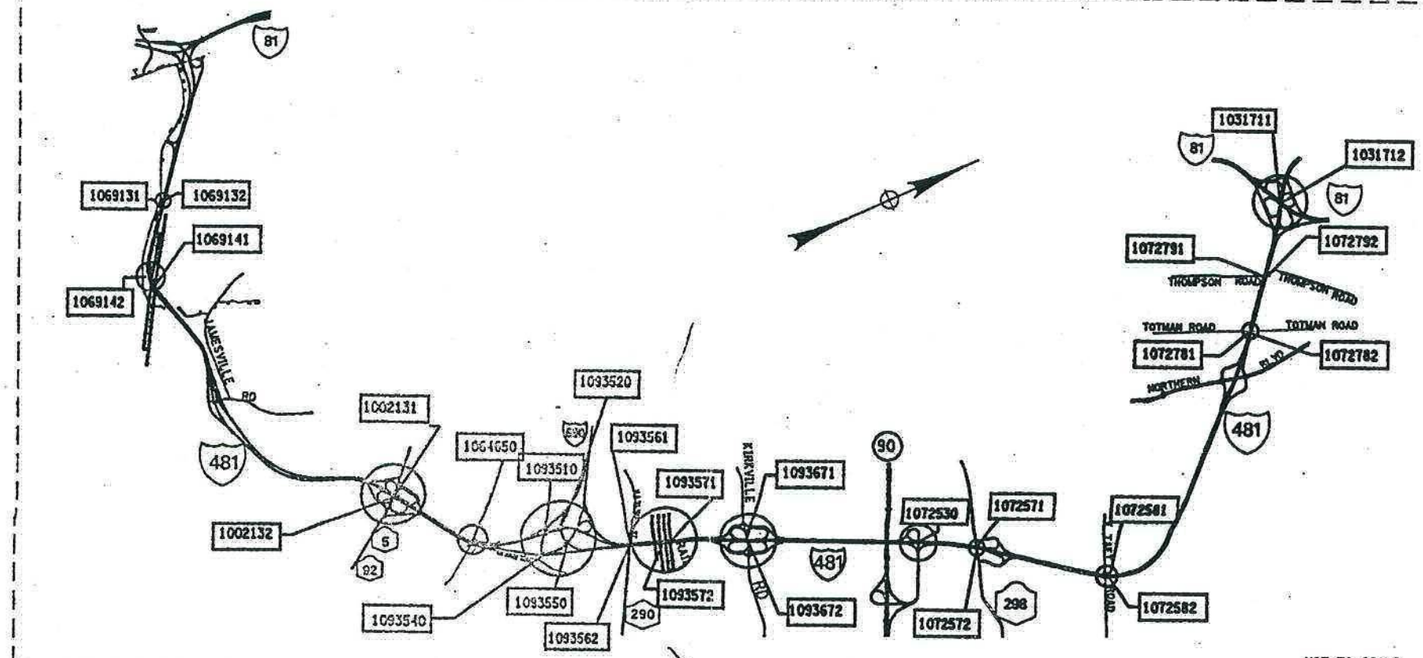

PROJECT LOCATION

NOT TO SCALE

RECOMMENDED BY John E Fritze 9/04/02
REGIONAL DESIGN ENGINEER DATE

RECOMMENDED BY Myron A. Ainsley 9/4/02
REGIONAL CONSTRUCTION ENGINEER DATE

RECOMMENDED BY 9/04/02
REGIONAL TRANSPORTATION MAINTENANCE ENGINEER DATE

RECOMMENDED BY 9-4-02
REGIONAL TRAFFIC ENGINEER DATE

APPROVED BY 09-04-02
REGIONAL DIRECTOR DATE

BRIDGE REHAB. PROJ.- ELEMENT SPECIFIC			
VARIOUS BRIDGES ON INTERSTATE 481			
TOWNS OF DEWITT AND CICERO			
ONONDAGA COUNTY			
FED. ROAD REG. NO.	STATE	SHEET NO.	TOTAL SHEETS
1	N.Y.	1	432
FEDERAL AID PROJECT NO.			
CAPITAL PROJECT IDENTIFICATION NO. 3056.13			
INDEX ON SHEET NO. 5 & 6			

DESIGN SUPERVISOR Edward Clemens DESIGNED BY Nick DeCicco CHECKED BY Al Kirkby ESTIMATED BY Roger Way DRAFTED BY Ron Spicer CHECKED BY [illegible]

FED ROAD REG. NO.	STATE	CONTRACT NO.	SHEET NO.	TOTAL SHEETS
1	N.Y.	D259214	251	432

BRIDGE REHABILITATION PROJECT (ELEMENT SPECIFIC)
VARIOUS BRIDGES ON INTERSTATE 481
TOWNS OF DEWITT AND CICERO
ONONDAGA COUNTY
P.I.N. 305613 B.I.N. 1072571

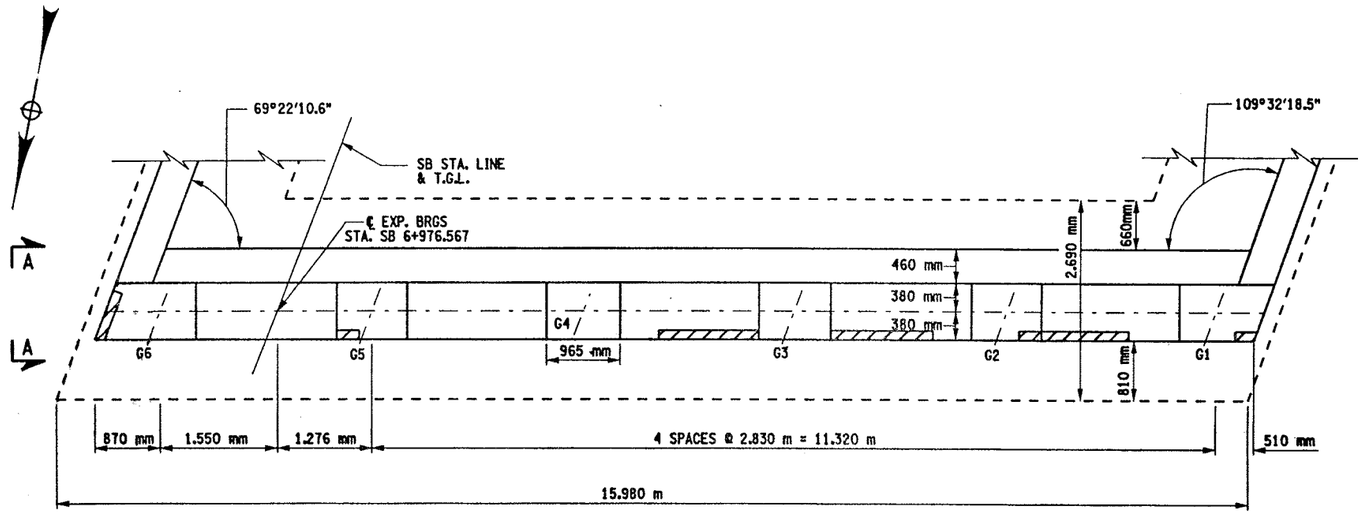

PLAN

SCALE 1:40

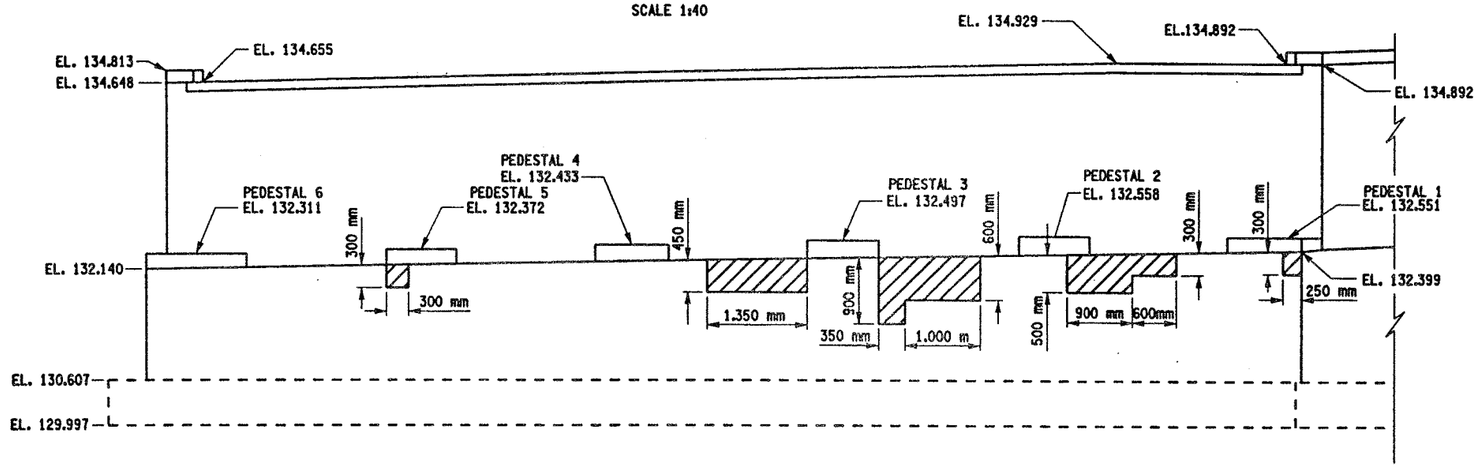

ELEVATION

SCALE 1:40

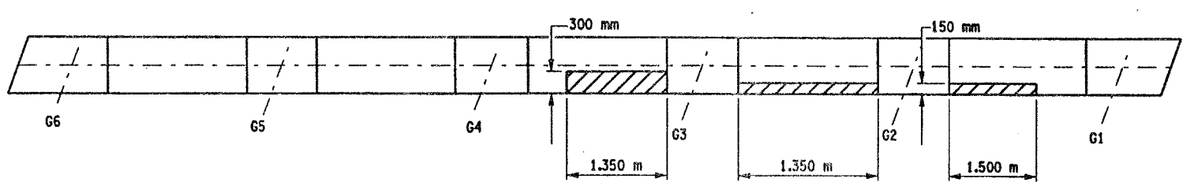

BRIDGE SEAT

SCALE 1:40

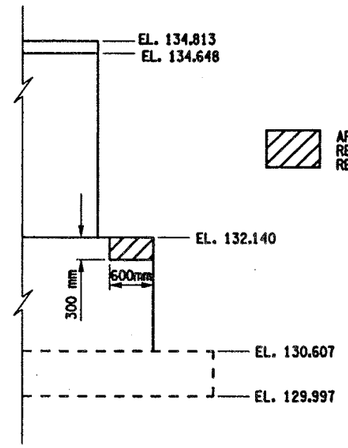

SECTION A-A

AREAS OF PROPOSED WORK: ITEM 582.05M REMOVAL OF STRUCTURAL CONCRETE- REPLACEMENT WITH CLASS A CONCRETE

NOTES:

1. ALL DIMENSIONS SHOWN FOR CONCRETE REMOVAL ARE APPROXIMATE AND SHALL BE FIELD VERIFIED BY THE CONTRACTOR AND EIC.
2. REMOVE CONCRETE TO LIMITS SHOWN AS WELL AS TO SOUND CONCRETE, A.O.B.E.
3. WHEN REMOVING EXISTING CONCRETE, SAWCUT 5 mm MIN. TO PRODUCE NEAT REMOVAL LINES. ANY COST TO BE INCLUDED IN THE BID PRICE FOR ITEM 582.05M.
4. ALL EXISTING REINFORCEMENT TO REMAIN.
5. ELEVATIONS ARE GIVEN FOR QUANTITY ESTIMATES ONLY.
6. REFER TO CONTRACT D250094 FOR ORIGINAL CONSTRUCTION DETAILS.
7. FOR REMOVAL DETAILS SEE DWG. AB8-2.

LIST OF ITEMS USED:

ITEM 582.05M - REMOVAL OF STRUCTURAL CONCRETE - REPLACEMENT WITH CLASS A CONCRETE (CM)

ALL DIMENSIONS ARE IN m UNLESS OTHERWISE NOTED

AS BUILT REVISIONS

SIGNATURE DATE

INTERSTATE 481 SB
OVER
ROUTE 298

SOUTH ABUTMENT PLAN AND ELEVATION

STATE OF NEW YORK
DEPARTMENT OF TRANSPORTATION

FILENAME	REGION	DATE	DRAWING NO.
305613AN.A1B	3	10/02	AB8-1

ESTIMATED BY ____ DRAFTED BY ____ CHECKED BY ____ DESIGNED BY ____ JOB MANAGER ____ DESIGN SUPERVISOR ____

FED ROAD REG. NO.	STATE	CONTRACT NO.	SHEET NO.	TOTAL SHEETS
1	N.Y.	D259214	362	432

BRIDGE REHABILITATION PROJECT (ELEMENT SPECIFIC)
VARIOUS BRIDGES ON INTERSTATE 481
TOWNS OF DEWITT AND CICERO
ONONDAGA COUNTY
P.I.N. 305613 | B.I.N. ALL BINS

BRIDGE JOINT TABLE

B.I.N. NUMBER	JOINT LOCATION	JOINT SKEW	SPAN(S) LENGTH FOR JOINT (METERS)	JOINT BEND LOCAT'N RT	JOINT BEND LOCAT'N LT	EXISTING JOINT TYPE	PROPOSED JOINT TYPE	CURB TO CURB DISTANCE (METERS) (SEE NOTES)	FASCIA & MEDIAN LENGTH (METERS) LT/RT	TOTAL LENGTH (METERS)	JOINT ITEM NUMBER(S)	DRAWING NUMBER SECT VIEW	DRAWING NUMBER PLAN VIEW	DRAWING NUMBER FASCIA DETAIL
1072530	EAST ABUT.	0°-00'-00"	33.528	N	N	ACJ	MAC-5	15.850	.457/.457	16.764	567.35M	JD-30	JD-29	JD-30
	WEST ABUT.	0°-00'-00"	37.795	N	N	ACJ	MAC-5	15.850	.457/.457	16.764	567.35M	JD-30	JD-29	JD-30
1072571	SOUTH ABUT.	20°-29'-45.2"	44.196	N	N	ACJ	MAC-6	14.481	.488/.488	15.457	567.36M	JD-32	JD-31	JD-32
	NORTH ABUT.	20°-29'-45.2"	———	N	N	ACJ	MAC-1	15.456	.488/.488	16.428	567.31M	JD-32	JD-31	JD-32
1072572	SOUTH ABUT.	21°-09'-2.1"	44.196	N	N	ACJ	MAC-6	12.746	.490/.490	13.726	567.36M	JD-34	JD-33	JD-34
	NORTH ABUT.	21°-09'-2.1"	———	N	N	ACJ	MAC-1	12.746	.490/.490	13.726	567.31M	JD-34	JD-33	JD-34
1072581	SOUTH ABUT.	3°59'-27.5"	37.033	N	N	ACJ	MAC-5	11.917	.458/.458	12.833	567.35M	JD-36	JD-35	JD-36
	NORTH ABUT.	3°-59'-27.5"	———	N	N	ACJ	MAC-1	11.917	.458/.458	12.833	567.31M	JD-36	JD-35	JD-36
1072582	SOUTH ABUT.	3°-51'-57.9"	37.033	N	N	ACJ	MAC-5	11.915	.458/.458	12.831	567.35M	JD-38	JD-37	JD-38
	NORTH ABUT.	3°-51'-57.9"	———	N	N	ACJ	MAC-1	11.915	.458/.458	12.831	567.31M	JD-38	JD-37	JD-38
1072781	EAST ABUT.	16°-26'-24"	———	N	N	ACJ	MAC-1	12.500	.530/.530	13.560	567.31M	JD-40	JD-39	JD-40
	WEST ABUT.	16°-26'-24"	33.635	N	N	ACJ	MAC-5	12.500	.530/.530	13.560	567.35M	JD-40	JD-39	JD-40
1072782	EAST ABUT.	16°-26'-24"	———	N	N	ACJ	MAC-1	13.183	.530/.530	14.243	567.31M	JD-42	JD-41	JD-42
	WEST ABUT.	16°-26'-24"	31.394	N	N	ACJ	MAC-5	12.589	.530/.530	13.649	567.35M	JD-42	JD-41	JD-42
1072791	EAST ABUT.	17°-02'-59.4"	30.785	N	N	ACJ	RCS	12.566	.531/.531	13.628	16567.64M	JD-47	JD-43	JD-47
	WEST ABUT.	17°-02'-59.4"	———	N	N	ACJ	RCS	12.566	.531/.531	13.628	16567.64M	JD-47	JD-43	JD-47
1072792	EAST ABUT.	17°-02'-59.4"	30.785	N	N	ACJ	MAC-5	12.566	.530/.530	14.015	567.35M	JD-44	JD-43	JD-44
	WEST ABUT.	17°-02'-59.4"	———	N	N	ACJ	MAC-1	12.566	.530/.530	14.015	567.31M	JD-44	JD-43	JD-44
1093510	WEST ABUT.	44°-07'-00"	———	N	N	ACJ/ADA	RCS	16.560	.637/.637	17.834	16567.64M	JD-46	JD-45	JD-46
	EAST ABUT.	40°-26'-00"	37.522	N	N	ADA	RADA	15.620	———	15.620	———	JD-46	JD-45	———

LEGEND

EXISTING JOINT TYPE:

ACJ = ARMORED COMPRESSION JOINT SYSTEM
MOD = MODULAR JOINT SYSTEM
MAC = MODIFIED ARMORED COMPRESSION SYSTEM (NO HORIZ. ARMORING ANGLE)
ADA = ARMORED DECK ANGLE
SS = STRIP SEAL JOINT
OPEN = OPEN JOINT

PROPOSED JOINT TYPE:

MAC-1 = MOD. ARM./COMP. SEAL JT. SYS. (A-1)
MAC-2 = MOD. ARM./COMP. SEAL JT. SYS. (A-2)
MAC-5 = MOD. ARM./COMP. SEAL JT. SYS. (A-5)
MAC-6 = MOD. ARM./COMP. SEAL JT. SYS. (A-6)
RCS = REPLACE EXISTING COMPRESSION SEAL
RADA = REMOVE ARMOR DECK ANGLE
MOD-1 = MODULAR JT. SYS. (ONE-CELL)
MOD-2 = MODULAR JT. SYS. (TWO-CELL)

JOINT BEND LOCATION:

N = NO BENDS
CRB = CURB LINE
PAV'T = PAVEMENT

GENERAL NOTES:

- ALL MEASUREMENTS SHALL BE FIELD VERIFIED.
- CURB TO CURB LENGTHS ARE MEASURED ALONG ℄ OF JOINT.
- MULTIPLE DIMENSIONS ARE SHOWN LOOKING UP-STATION, LEFT TO RIGHT.
- ALL DIMENSIONS ARE SHOWN IN METERS.

INFORMATIONAL NOTES:

BIN 1072530 - NO JOINT AT PIER.

BIN 1072791 - REPLACE COMPRESSION SEALS
BEG. ABUT. (EAST), TYPE A-5
END ABUT. (WEST), TYPE A-1

FOR JOINT DETAILS REFER TO THE FOLLOWING DRAWINGS:

DWG. NO. JD-1 - MODIFIED ARMORED COMPRESSION SEAL JOINT SYSTEM.
DWG. NO. JD-24 - ONE-CELL MODULAR JOINT SYSTEM.
DWG. NO. JD-25 - TWO-CELL MODULAR JOINT SYSTEM.

LIST OF BRIDGE JOINT ITEMS USED:

ITEM 566.01M - MODULAR EXP. JOINT SYSTEM ONE-CELL (M)
ITEM 566.02M - MODULAR EXP. JOINT SYSTEM TWO-CELL (M)
ITEM 567.31M - MODIFIED ARMORED JOINT SYSTEM W/ COMP. SEAL TYPE A1 (m)
ITEM 567.32M - MODIFIED ARMORED JOINT SYSTEM W/ COMP. SEAL TYPE A2 (m)
ITEM 567.35M - MODIFIED ARMORED JOINT SYSTEM W/ COMP. SEAL TYPE A5 (m)
ITEM 567.36M - MODIFIED ARMORED JOINT SYSTEM W/ COMP. SEAL TYPE A6 (m)
ITEM 16567.640001M - REPLACE COMPRESSION SEAL FOR EXISTING BRDGE JOINTS (m)

ALL DIMENSIONS ARE IN m UNLESS OTHERWISE NOTED

AS BUILT REVISIONS

SIGNATURE ——— DATE

INTERSTATE 481 VARIOUS BRIDGES

BRIDGE JOINT TABLE

STATE OF NEW YORK
DEPARTMENT OF TRANSPORTATION

FILENAME	REGION	DATE	DRAWING NO.
305613AJ.JA1	3	10/02	JT-2

DESIGN SUPERVISOR ——— JOB MANAGER ——— DESIGNED BY ——— ESTIMATED BY ——— DRAFTED BY ——— CHECKED BY

FED ROAD REG. NO.	STATE	CONTRACT NO.	SHEET NO.	TOTAL SHEETS
1	N.Y.	D259214	395	432

BRIDGE REHABILITATION PROJECT (ELEMENT SPECIFIC)
VARIOUS BRIDGES ON INTERSTATE 481
TOWNS OF DEWITT AND CICERO
ONONDAGA COUNTY
P.I.N. 305613 | B.I.N. 1072571

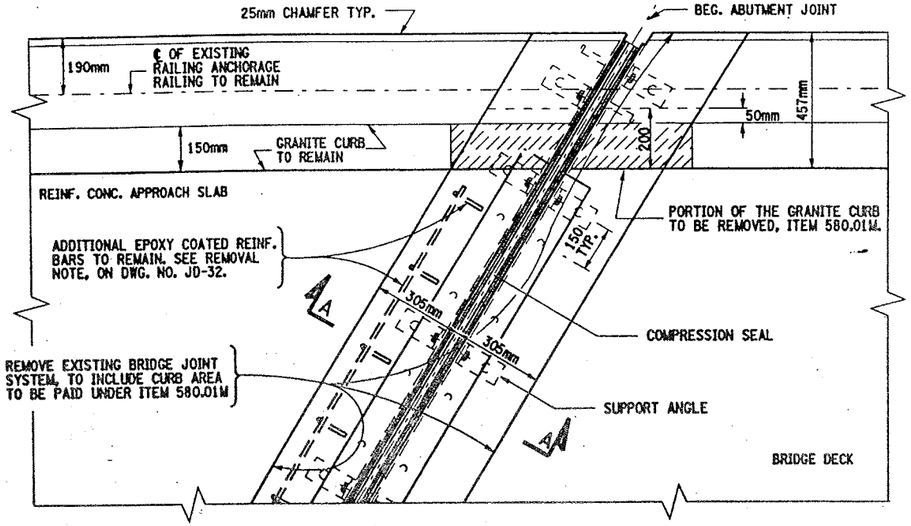

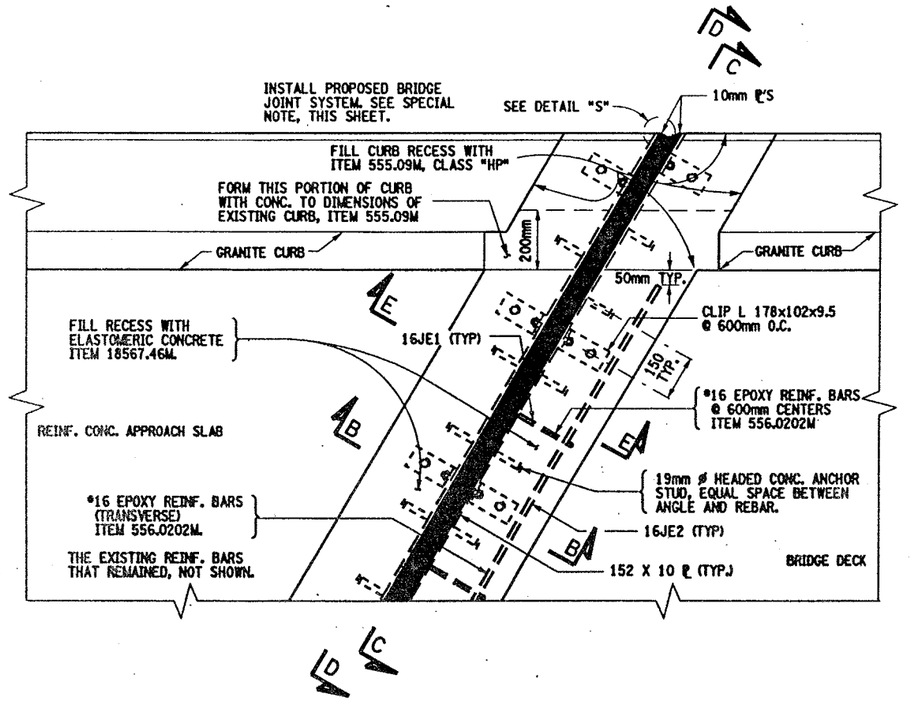

NOTES:

1. REFER TO DWG. NO. JD-1 FOR PROPOSED JOINT DETAILS AND ALL NOTES SHALL APPLY.
2. FOR SECTION VIEWS SEE DWG. NO. JD-32.
3. REFER TO DWG. NO. JT-2 FOR PROPOSED BRIDGE JOINT INSTALLATION LOCATIONS.
4. THE SECTION OF THE GRANITE CURB SHALL BE SAWCUT TO PRODUCE NEAT REMOVAL LINES. COST BE TO INCLUDED IN PRICE BID FOR 580.01M.
5. BIN 1072571 SB STRUCTURE HAS A 20°-29'-45.2" SKEW ANGLE.
6. BRIDGE JOINT REPAIRS/REPLACEMENT SHALL BE CONDUCTED UTILIZING NIGHT-TIME CONSTRUCTION TECHNIQUES FOR BOTH OF THESE STRUCTURES. WHEN EVER THE JOINT BLOCK-OUT CONCRETE IS REMOVED OR CURING, STEEL ROAD PLATES SHALL BE USED. REFER TO DWG. NO. AA-RP1 FOR ROAD PLATE DETAILS.

SPECIAL NOTE:

BIN 1072571 - INSTALL ITEM 567.36M AT SOUTH ABUT. JOINT.
INSTALL ITEM 567.31M AT NORTH ABUT. JOINT.

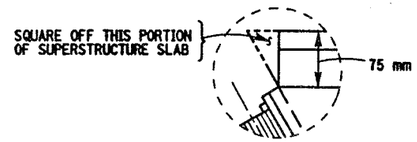

DETAIL "S"
NOT TO SCALE

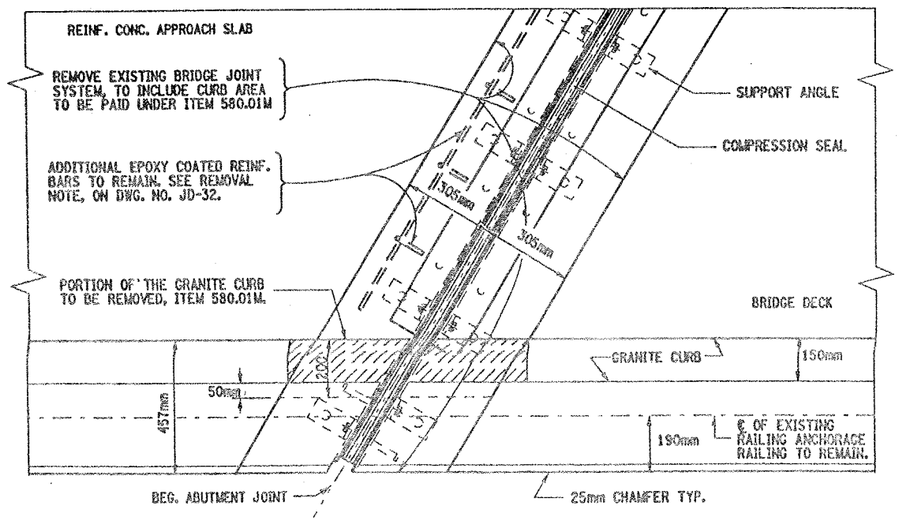

EXISTING ABUTMENT JOINT PLAN VIEW

BIN 1072571 - BEG. ABUT. SHOWN
END ABUT. SIMILAR

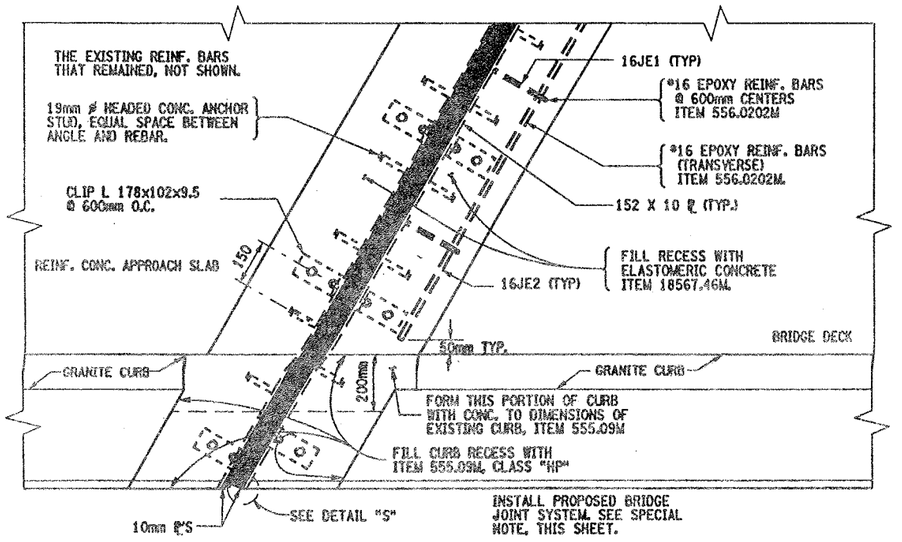

PROPOSED ABUTMENT JOINT PLAN VIEW

BIN 1072571 - BEG. ABUT. SHOWN
END ABUT. SIMILAR

WORK TO BE DONE:

BIN 1072571 - REPLACE BEGINNING AND END BRIDGE ABUTMENT JOINTS.

ITEMS USED:

ITEM 555.09M - STRUCT. CONCRETE, CLASS "HP" (CM)
ITEM 556.0202M - EPOXY-COATED BAR REINF. FOR STRUCT. (Kg)
ITEM 567.31M - MOD. ARM. JOINT SYSTEM W/COMP. SEAL TYPE A-1 (M)
ITEM 567.36M - MOD. ARM. JOINT SYSTEM W/COMP. SEAL TYPE A-6 (M)
ITEM 18567.46M - ELASTOMERIC CONCRETE FOR BRIDGE JOINT SYSTEMS (M)
ITEM 580.01M - REMOVAL OF STRUCT. CONCRETE (CM)

ALL DIMENSIONS ARE IN mm UNLESS OTHERWISE NOTED

AS BUILT REVISIONS

SIGNATURE DATE

INTERSTATE 481 SB
OVER
ROUTE 298
BRIDGE JOINT DETAILS

STATE OF NEW YORK
DEPARTMENT OF TRANSPORTATION

FILENAME	REGION	DATE	DRAWING NO.
305613AJJA1	3	10/02	JD-31

DESIGN SUPERVISOR — JOB MANAGER — DESIGNED BY — ESTIMATED BY — DRAFTED BY — CHECKED BY — CHECKED BY

FED ROAD REG. NO.	STATE	CONTRACT NO.	SHEET NO.	TOTAL SHEETS
1	N.Y.	D259214	396	432
BRIDGE REHABILITATION PROJECT (ELEMENT SPECIFIC)				
VARIOUS BRIDGES ON INTERSTATE 481				
TOWNS OF DEWITT AND CICERO				
ONONDAGA COUNTY				
P.I.N. 305613		B.I.N. 1072571		

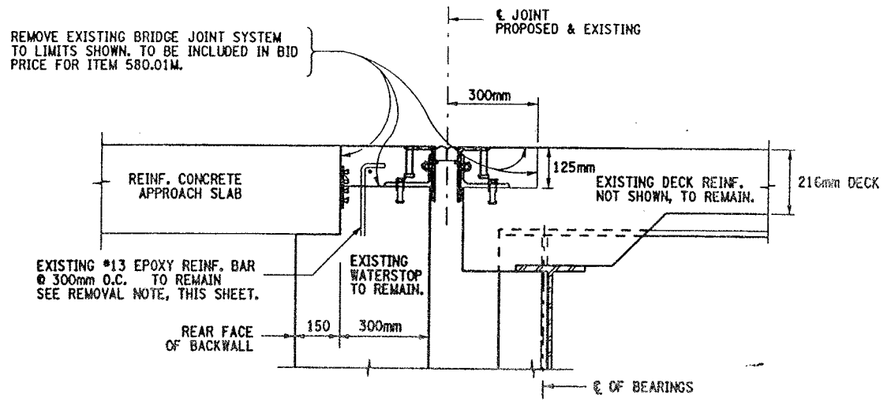

SECTION A-A
EXISTING ABUTMENT JOINT

NOT TO SCALE

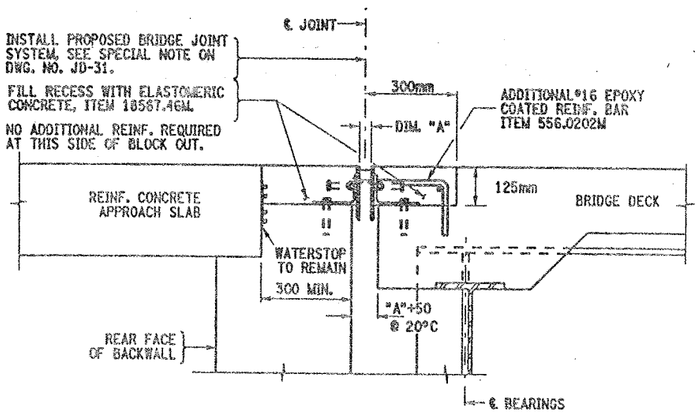

SECTION B-B
PROPOSED ABUTMENT JOINT

NOT TO SCALE

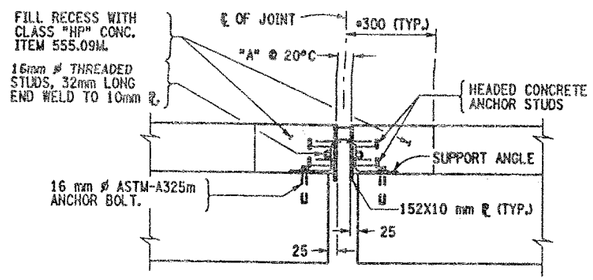

PROPOSED ABUTMENT JOINT
SECTION E-E

NOT TO SCALE

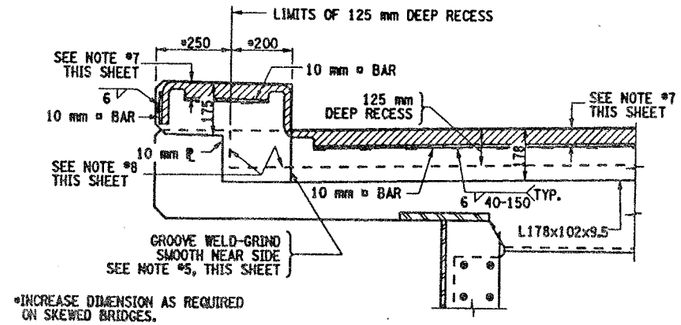

PROPOSED ABUTMENT JOINT
SECTION C-C (BRUSH CURB)

NOT TO SCALE

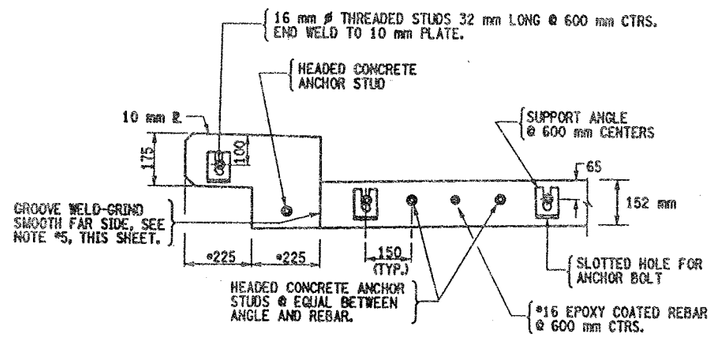

*INCREASE DIMENSION AS REQUIRED ON SKEWED BRIDGES.

PROPOSED ABUTMENT JOINT
SECTION D-D (BRUSH CURB)
(ONLY THE STEEL SHOWN)

NOT TO SCALE

REMOVAL NOTE:

EXISTING EPOXY COATED REINF. BARS ENCOUNTERED AT THE JOINT BLOCK-OUTS, SHALL REMAIN. CARE SHALL BE TAKEN DURING REMOVAL OPERATIONS, NOT TO DAMAGE THE REINFORCEMENT BARS.

PRIOR TO PLACEMENT OF NEW CONCRETE THE EXISTING EPOXY BARS SHALL BE CLEANED AND ANY FIELD REPAIRS DEEMED NECESSARY BY THE ENGINEER, BE MADE AS PER SECTION 556-3.02(C) OF STANDARD SPECIFICATIONS. TO BE INCLUDED IN PRICE BID FOR ITEM 580.01M.

NOTES:

1. ACTUAL BRIDGE JOINT BLOCK-OUT DIMENSIONS MAY VARY. REMOVAL LIMITS SHALL BE TO EXISTING BLOCK-OUT LOCATIONS, AOBE.
2. EXISTING WATERSTOPS SHALL REMAIN.
3. FOR CALCULATION OF "A" DIMENSION REFER TO DWG. NO. JD-1.
4. REFER TO DWG. NO. JD-31 FOR PROPOSED PARTIAL PLAN VIEWS.
5. ALL WELDS SHALL BE GROUND SMOOTH TO THE SATISFACTION OF THE ENGINEER, ON SEAL CONTACT SIDE OF EDGE BEAM.
6. REFER TO DWG. NO. JD-1 FOR PROPOSED JOINT DETAILS AND ALL NOTES SHALL APPLY.
7. THIS DEPTH SHALL BE INDICATED ON THE SHOP DRAWINGS AND SHALL BE SUCH THAT WHEN THE SEAL IS COMPRESSED TO 50% OF ITS NOMINAL WIDTH, THE TOP OF THE SEAL SHALL BE NOT LESS THAN 6 mm NOR MORE THAN 19 mm BELOW THE TOP OF ROADWAY.
8. RECESSES RECEIVING ITEM 555.09M, AFTER SURFACE PREPARATION, THOROUGHLY WET THE CONCRETE SURFACES AND ALL POROUS SURFACES TO BE IN CONTACT WITH NEW CONCRETE FOR 12 HOURS. NOTE, THE USE OF MATERIAL SPECIF. 705-22 PORTLAND CEMENT MORTAR BONDING GROUT HAS BEEN ELIMINATED, (PROJECT PROPOSAL).

ITEMS USED:

ITEM 555.09M - STRUCT. CONCRETE, CLASS "HP" (CM)
ITEM 556.0202M - EPOXY-COATED BAR REINF. FOR STRUCT. (Kg)
ITEM 18567.46M - ELASTOMERIC CONCRETE FOR BRIDGE JOINT SYSTEMS (M)
ITEM 580.01M - REMOVAL OF STRUCT. CONCRETE (CM)

ALL DIMENSIONS ARE IN mm UNLESS OTHERWISE NOTED

AS BUILT REVISIONS

SIGNATURE DATE

INTERSTATE 481 SB
OVER
ROUTE 298

BRIDGE JOINT DETAILS

STATE OF NEW YORK
DEPARTMENT OF TRANSPORTATION

FILENAME	REGION	DATE	DRAWING NO.
305613AJJA1	3	10/02	JD-32

DESIGN SUPERVISOR _____ JOB MANAGER _____ DESIGNED BY _____ ESTIMATED BY _____ DRAFTED BY _____ CHECKED BY _____ CHECKED BY _____

BIN: 1072571
I481 SB / Route 298

DECK DETERIORATION PLAN

NOT TO SCALE

N

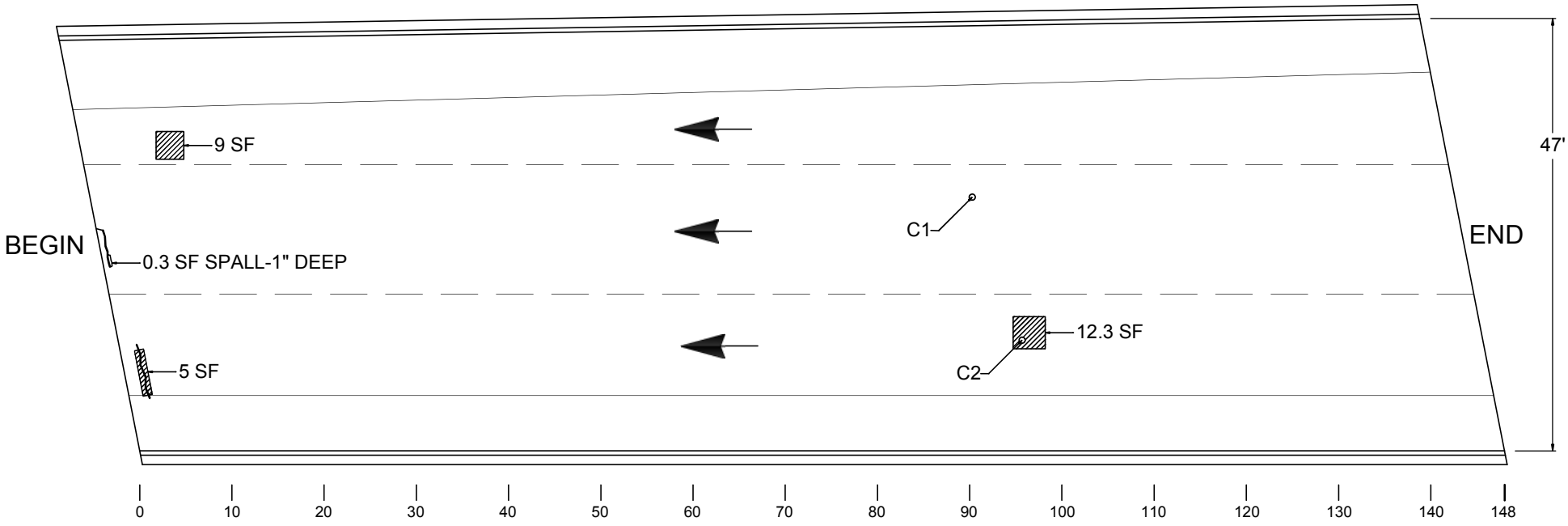

TOTAL DAMAGED AREA EQUALS 26.6 SF WHICH IS 0.4 % OF DECK SURFACE

LEGEND

- Hollow Concrete
- Patch
- Coring location
- Crack

IN-DEPTH PHOTO DOCUMENTATION

BIN: 1072571
I481 SB / Route 298

IN-DEPTH INSPECTION
PHOTO LOCATION PLAN

N

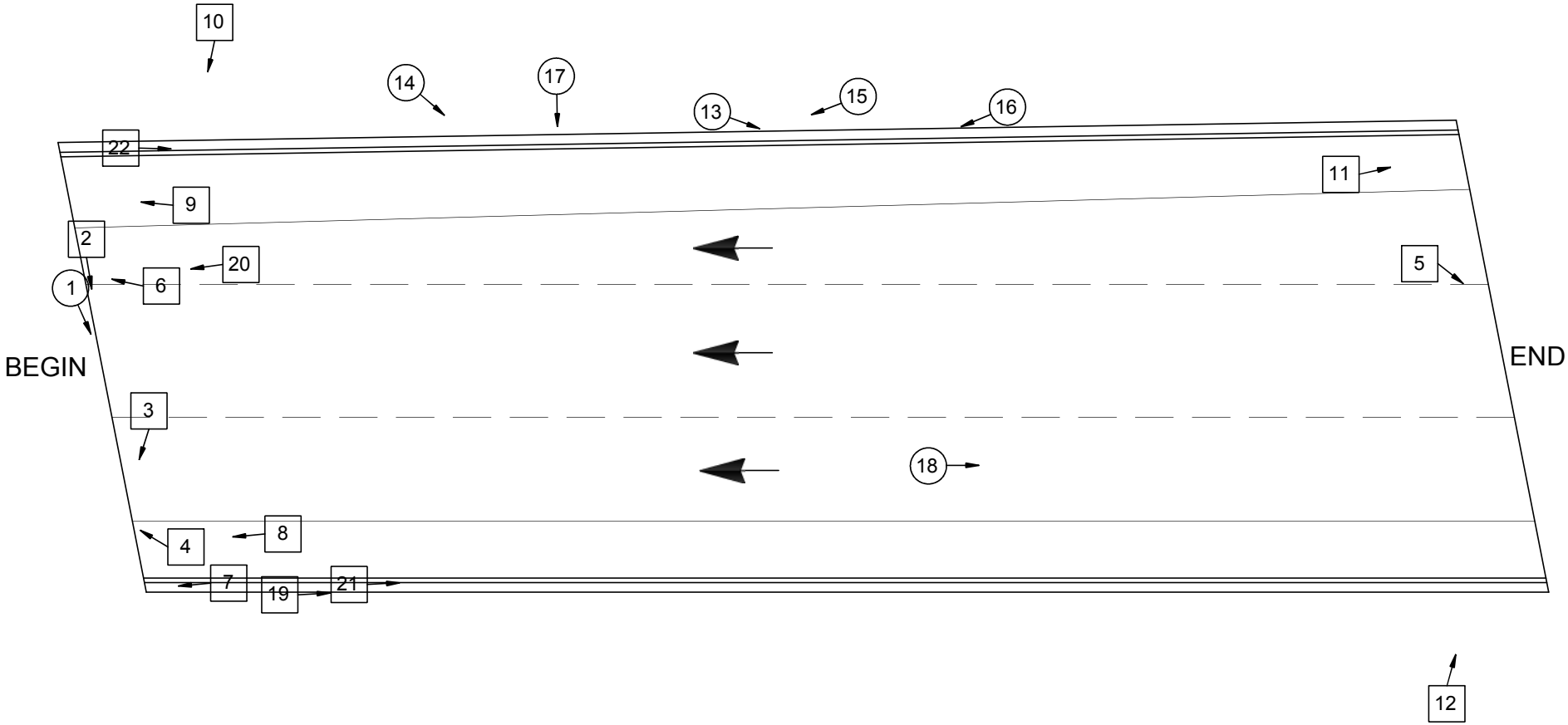

LEGEND

(XX) → Photo Above Deck

[XX] → Photo Below Deck

In-Depth Inspection Photos

I-481 SB over Rt. 298, BIN 1072571



DESCRIPTION: DECK AT BEGIN CENTER LANE (L-R)

PHOTO 1



DESCRIPTION: BEGIN JOINT UNDERSIDE (L-R)

PHOTO 2

In-Depth Inspection Photos

I-481 SB over Rt. 298, BIN 1072571



DESCRIPTION: BEGIN STEM BAY 4

PHOTO 3



DESCRIPTION: BEGIN STEM BAY 5

PHOTO 4

In-Depth Inspection Photos

I-481 SB over Rt. 298, BIN 1072571



DESCRIPTION: END STEM BAY 2

PHOTO 5



DESCRIPTION: BEGIN TOP OF BACKWALL BAY 2

PHOTO 6

In-Depth Inspection Photos

I-481 SB over Rt. 298, BIN 1072571



DESCRIPTION: BEGIN RIGHT BACKWALL

PHOTO 7



DESCRIPTION: BEGIN STEM BAY 5

PHOTO 8

In-Depth Inspection Photos

I-481 SB over Rt. 298, BIN 1072571



DESCRIPTION: BEGIN STEM BAY I (BAY 3 TYP.)

PHOTO 9



DESCRIPTION: BEGIN ABUTMENT

PHOTO 10

In-Depth Inspection Photos

I-481 SB over Rt. 298, BIN 1072571



DESCRIPTION: END STEM BAY 1

PHOTO 11



DESCRIPTION: END ABUTMENT

PHOTO 12

In-Depth Inspection Photos

I-481 SB over Rt. 298, BIN 1072571



DESCRIPTION: LEFT CURB AT RAIL POST 8 OF 15

PHOTO 13



DESCRIPTION: LEFT CURB AT RAIL POST 5 OF 15

PHOTO 14

In-Depth Inspection Photos

I-481 SB over Rt. 298, BIN 1072571



DESCRIPTION: LEFT CURB AT RAIL POST 9 OF 15

PHOTO 15



DESCRIPTION: LEFT CURB AT RAIL POST 11 OF 15

PHOTO 16

In-Depth Inspection Photos

I-481 SB over Rt. 298, BIN 1072571



DESCRIPTION: LEFT SNOW FENCE POST 3

PHOTO 17



DESCRIPTION: RIGHT LANE AT 98’ FROM BEGIN

PHOTO 18

In-Depth Inspection Photos

I-481 SB over Rt. 298, BIN 1072571



DESCRIPTION: DECK AT RIGHT OVERHANG (B-E)

PHOTO 19



DESCRIPTION: BAY 2 OF 5 AT BEG

PHOTO 20

In-Depth Inspection Photos

I-481 SB over Rt. 298, BIN 1072571



DESCRIPTION: GIRDER 6 FROM BEGIN

PHOTO 21



DESCRIPTION: GIRDER 1 FROM BEGIN

PHOTO 22

ASBESTOS SAMPLING SURVEY

Asbestos Sampling Survey

Location:

BIN 1072571

Interstate Route I-481 South Bound
over Route 298

Prepared for:

New York State
Department of Transportation

PIN 3056.13.111

LaBella Project No. 201001

August 2001

Table of Contents

Page

I. Project Summary 1

II. Site Description 1

III. Inspection Procedures 1

IV. Results 2

Certification 2

Figures and Table

I. Project Summary

In accordance with conditions of Term Agreement D012606, LaBella Associates, P.C. conducted an asbestos sampling survey of the Interstate Route I-481 south bound bridge over Route 298. Based on laboratory analyses of bulk samples collected, no asbestos-containing materials were identified.

II. Site Description

The Site is located in Onondaga County, New York. For the purpose of this report, the Site consists of the Interstate Route I-481 south bound bridge over Route 298. (See attached FIGURE 1 - Site Location Map).

III. Inspection Procedures

The following procedures were used to obtain the data for this Report:

A. A review of record drawings supplied by Region 3 personnel and a visual inspection of the subject structure were conducted to identify potential visible/accessible sources of asbestos-containing materials. Observations and notes were made to provide a description of the structure, and an estimate of the approximate amount, length, or area of ACM present.

B. Physical or operational constraints, which might affect the removal of the ACM, were identified and reported.

C. Bulk samples of suspected ACM were collected during the site inspection of the subject structure. Samples were taken from each homogeneous area that may contain ACM.

D. Samples were submitted for analysis. Preliminary PLM analyses of NOB materials were performed by LaBella Laboratories, a NYSDOH approved laboratory, to determine the presence and percentage of asbestos in each sample. TEM analyses of NOB materials, if necessary, were performed by AMA Analytical, Inc.

E. Lab results were used to determine the approximate location, type, and amount of the verified ACM.

F. A drawing of the structure at the Site was created, in order to show sample locations and the approximate locations and amounts of confirmed ACM observed in accessible locations.

Only accessible areas were inspected. Inaccessible areas, such as areas within the bridge or the approaches to the bridge were not included in this inspection. No investigation was conducted by LaBella Associates to determine the presence of underground utilities on or in the immediate vicinity of the Site. Actual sample locations are shown in the attached FIGURE 2. Results of bulk sample analyses are tabulated in the attached TABLE.

IV. Results

BIN 1072571 Interstate Route I-481 South Bound over Route 298

Based on laboratory analyses of bulk samples collected, no asbestos-containing materials were identified.

Certification

LaBella Associates, P.C. certifies the accuracy of this report, to the best of our knowledge, based on the information collected as described in the Inspection Procedures Section of this investigation.

Figures & Table

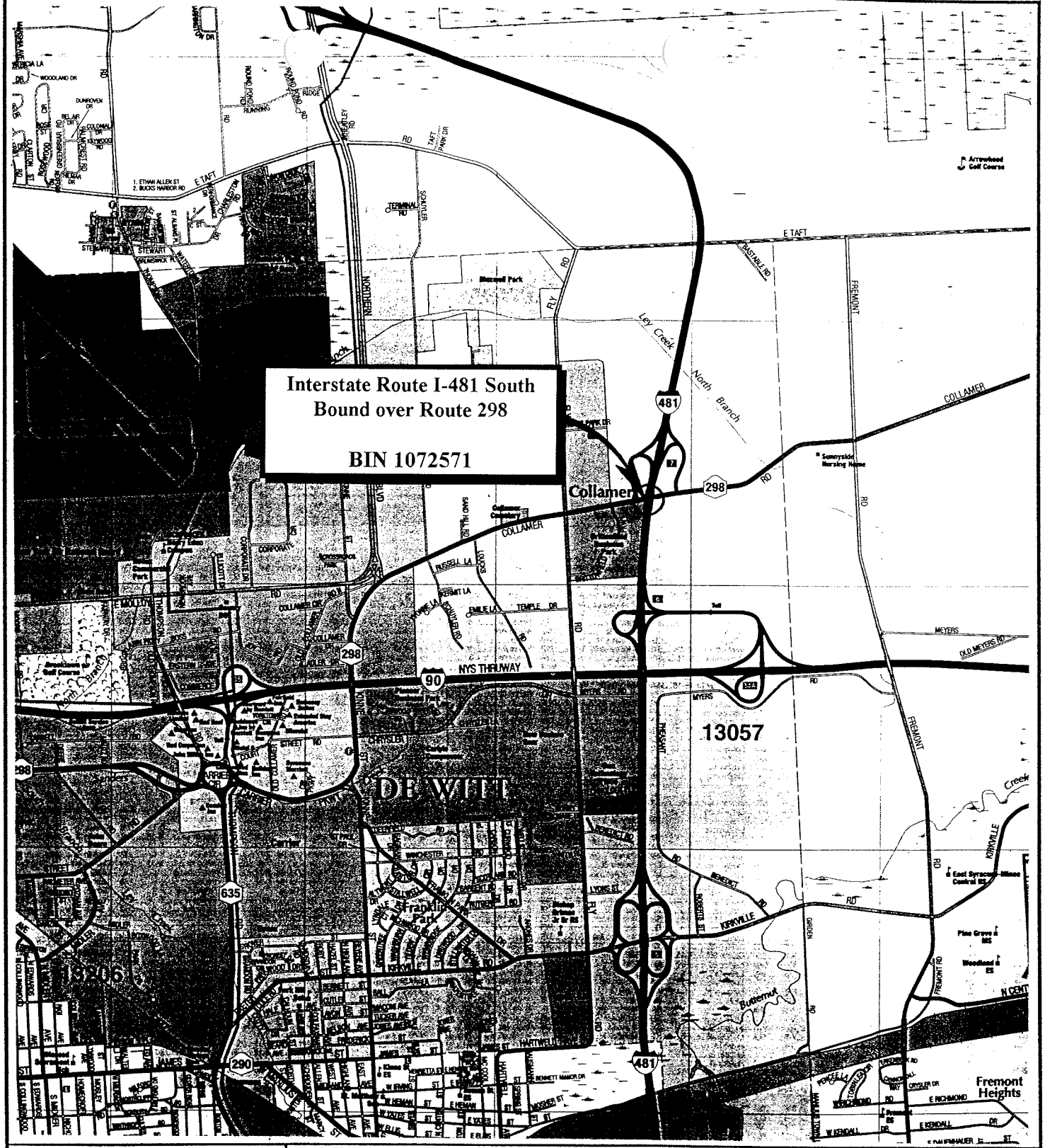

N

FIGURE 1
Site Location Map

Interstate Route I-481 South Bound over Route 298
Onondaga County, New York

LABELLA

PROJECT NO. 201001

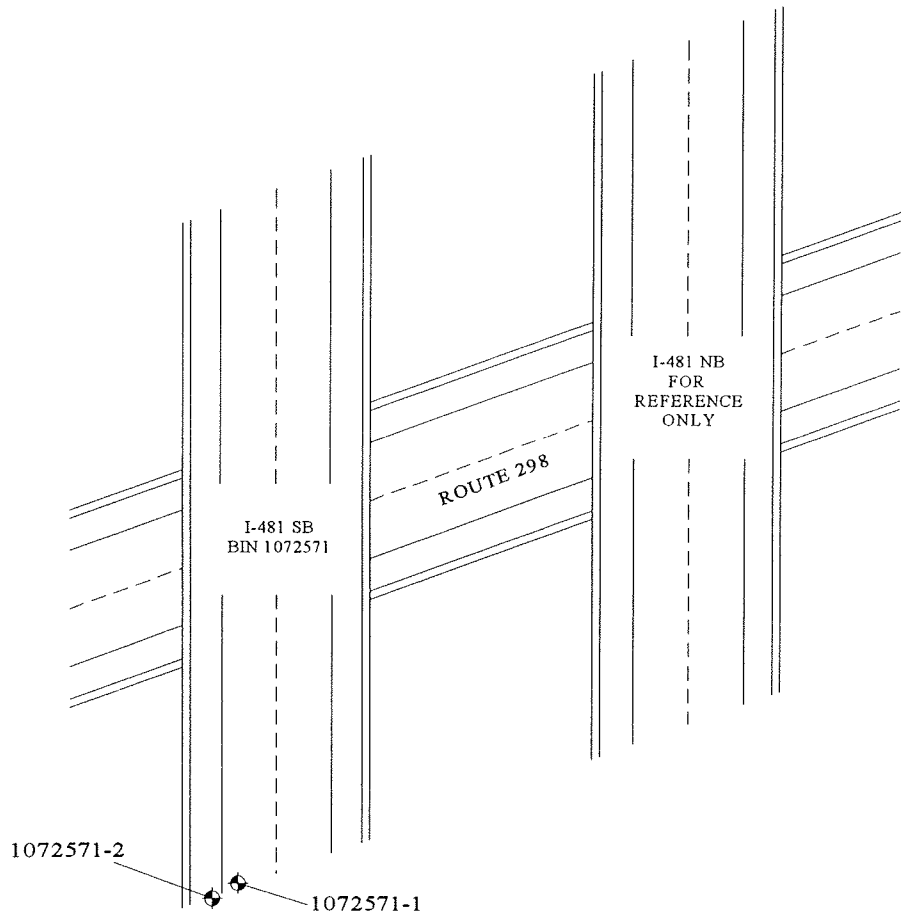

NOTE: NO ASBESTOS-CONTAINING MATERIALS IDENTIFIED.

LEGEND

◆ 1072571-1 SAMPLE LOCATION

NORTH

PROJECT TITLE: ASBESTOS SAMPLING SURVEY 19 BRIDGES ALONG INTERSTATE I-481 ONONDAGA COUNTY, NEW YORK	PROJECT NO. 201001 PIN 3056.13.111
FIGURE TITLE: FIGURE 2 BIN 1072571 I-481 SB OVER ROUTE 298 SAMPLE LOCATIONS & CONFIRMED ACM	NOT TO SCALE DATE: AUGUST, 2001

Bulk Sample Results Table

Asbestos Sampling Survey
BIN 1072571
Interstate Route I-481 South Bound
over Route 298
Onondaga County, New York
LaBella Project # 201001
PIN 3056.13.111

Sample #	Sample Location	Type of Material	Results % Asbestos	Amount of Material	Specification Item No.
1072571-1	South End of Bridge Beneath Bearing	Bearing Pad	None Detected	N/A	N/a
1072571-2	South End of Bridge on Back Wall	Gray Masonry Coating	None Detected	N/A	N/a

LATEST BIENNIAL INSPECTION REPORT

Inspection Date: 4/4/2012 RC: 33 BIN: 1072571

Bridge Ratings

Carried: 481I 481I33012096 Crossed: 298 298 33012055 CheckValue: 1,779,292,602

Inspection Agency: 10 - NYSDOT Type of Inspection: 1 - BIENNIAL
GTMS: A02 -- Unpainted Steel - Stringer/Multi-Beam or Girder
POSTINGS: See Gen Rec Page 1 for Postings at time of inspection.
Further Investigation Needed: No
State Highway Number: 70-7 Milepoint: 13.39 AADT/Yr: 13959 / 2002
Orientation: 1 - North Political Unit: 0233 - Town of DEWITT Year Built: 1985
Total Spans: 1 Ramp Bridge Attached To Span: NA BIN: NA
General Recommendation: 6 Computed Condition Rating: 5.578

Abutment Ratings:	**Beg Abut**	**End Abut**
Joint with Deck	5	6
Bearings, Bolts, Pads	6	5
Seats and Pedestals	6	5
Backwall	5	5
Stem (Breastwall)	6	6
Erosion or Scour	6	6
Footings	9	9
Piles	8	8
Recommendation	5	5

Wingwall Ratings:	**Beg Abut**	**End Abut**
Walls	5	5
Footings	9	9
Erosion or Scour	6	6
Piles	8	8

Channel Ratings:	**Channel**
Stream Alignment	8
Erosion and Scour	8
Waterway Opening	8
Bank Protection	8

Approach Ratings:	**Approaches**
Drainage	5
Embankment	5
Settlement	6
Erosion	6
Pavement	4
Guide Railing	6

Number of Flags Issued:

RED: 0 Yellow: 0 Safety: 0

Vulnerability Reviews Recommended: 1=Yes, 2=No, 3=NA, X=NotActive

Hydraulic: 3	Overload: X	Steel: 2
Collision: 2	Concrete: X	Seismic: X

Inspector's Signature: CheckValue: 1,779,292,602 Date: 4/4/2012

Peter Riehlman,PE () (Inspector ID:3000052)

Signed copy of this inspection report is available in the appropriate NYSDOT Regional Office

Reviewed By: Date: 5/14/2012

James R. Manning,PE () (QC ID:3000023)

Signed copy of this inspection report is available in the appropriate NYSDOT Regional Office

Inspection Date: 4/4/2012 RC: 33 BIN: 1072571

Span Ratings

Carried: 481I 481I33012096 Crossed: 298 298 33012055 CheckValue: 1,779,292,602

Deck Element Ratings:	**001**
Wearing Surface	6
Curbs	5
Sidewalks, Fascias	6
Railings, Parapets	6
Scuppers	8
Gratings	8
Median	8
Mono Deck Surface	6

Superstructure Ratings:	**001**
Structural Deck	6
Primary Members	6
Secondary Members	6
Paint	5
Joints	8
Recommendation	6

Pier Ratings:	**001**
Bearings, Bolts, Pads	8
Pedestals	8
Top of Cap or Beam	8
Stem Solid Pier	8
Cap Beam	8
Pier Columns	8
Footings	8
Erosion or Scour	8
Piles	8
Recommendation	8

Utility Ratings:	**001**
Lighting	8
Sign Structure	8
Utilities and Support	6

Field Notes:

Field Date	Arrival	Departure	Temp (C)	Temp (F)	Weather Conditions
4/4/2012	10:00:00 AM	11:45:00 AM		50	ptly cldy

Inspection Date: 4/4/2012 RC: 33 BIN: 1072571

Inspection Notes

Carried: 481I 481I33012096 Crossed: 298 298 33012055 CheckValue: 1,779,292,602

Note ID: 331210725710000

Beg Abut -- Abutment: Joint with Deck -- Rated 5, Was 5
Referenced Photos:
5

Note ID: 331210725710001

Beg Abut -- Abutment: Bearings, Bolts, Pads -- Rated 6, Was 4
Referenced Photos: "3"
2012- Beg bearings painted since last inspection

Note ID: 331210725710002

Approaches: Pavement -- Rated 4, Was 4
Referenced Photos: "1", "2"
2012- Potholes forming along the length of the right edge of the beg. slab up to 3" deep, reported to maintenance. Asphalt to concrete transition area is cracking.

Inspection Date: 4/4/2012 RC: 33 BIN: 1072571

Inspection Photos in Photo Number Order

Carried: 481I 481I33012096 Crossed: 298 298 33012055 CheckValue: 1,779,292,602

Beg appr looking Rt



Photo Number: 1 Photo Filename: DSCN3141.jpg

Location:
Beg Rt appr slab



Photo Number: 2 Photo Filename: DSCN3161.jpg

Inspection Date: 4/4/2012 RC: 33 BIN: 1072571

Inspection Photos in Photo Number Order

Carried: 481I 481I33012096 Crossed: 298 298 33012055 CheckValue: 1,779,292,602

Beg Brg #1 looking Rt



Photo Number: 3 Photo Filename: DSCN3140.jpg

Rt fascia over travel lanes



Photo Number: 4 Photo Filename: DSCN3141.jpg

Inspection Date: 4/4/2012 RC: 33 BIN: 1072571

Inspection Photos in Photo Number Order

Carried: 481I 481I33012096 Crossed: 298 298 33012055 CheckValue: 1,779,292,602

sand berm along Lt curb looking toward End



Photo Number: 5 Photo Filename: DSCN3143.jpg

No Photo

Inspection Date: 4/4/2012 RC: 33 BIN: 1072571

Inspection Sketches in Sketch SysID Order

Carried: 481I 481I33012096 Crossed: 298 298 33012055 CheckValue: 1,779,292,602

Sketch ID: 331210725710000 Sketch Filename: LdRatNCL.12

General Sketch for Bridge
Referenced Photos:

Region 3 LoadRatingFieldCheckForm

NYSDOT BRIDGE INSPECTION REPORT			
SHEET	1	OF	1

LOAD RATING FIELD CHECK FORM

BIN:	1072571	Insp. Date:	04/04/2012

Dead Load - Note Changes since Last load Rating or state "NONE":

NONE

Section Loss -Note Changes since Last load Rating or state "NONE":

NONE

Additional Notes:

NONE

Attachments:

Team Leader: Peter Riehlman

Inspection Date: 4/4/2012 RC: 33 BIN: 1072571

Gen. Rec., Postings, Federal Ratings, etc.

Carried: 481I 481I33012096 Crossed: 298 298 33012055 CheckValue: 1,779,292,602

Overall Condition:

GENERAL RECOMMENDATION: 6

Computed Condition Rating: 5.578

Problems Requiring Action:

NO Further Investigation Needed

NO Flags Issued

POSTINGS:

Inspector Confirmed existing Posting data as correct.
Posted Vertical Clearance ON the bridge is: No Posting
Posted Vertical Clearance UNDER the bridge is: No Posting
No Load Restriction is posted on this bridge

Overloads Observed:

NO Overload Vehicles were observed on this bridge

FEDERAL RATINGS:

NBI Deck Condition: 8
NBI Superstruct Condition: 8
NBI Substruct Condition: 7
NBI Channel Condition: N
NBI Culvert Condition: N

Diving Inspection Needs:

Diving Inspection Required? No Date of Last Diving Inspection: No Date

Inventory Problems:

Inventory Problems Exist? No

Miscellaneous:

Time Required to Inspect Bridge: 2 Hours

Lane Closure Needs: None Required

No Railroad Flagging Required

No Pedestrian Fence

There is a Snow Fence present

The BIN Plate is in OK condition

Inspection Date: 4/4/2012 RC: 33 BIN: 1072571

Gen. Rec., Postings, Federal Ratings, etc.

Carried: 481I 481I33012096 Crossed: 298 298 33012055 CheckValue: 1,779,292,602

Special Emphasis Inspection Required:

Non-Redundant/Fracture Critical Members - No
Pin and Hangers - No
Fatigue-Prone Welds - No
Non-Categorized Fatigue-Prone Details - No
Other (Specified in Text) - No

Special Emphasis Details:

No Special Emphasis Inspection Required.

General Notes To the Next Inspector:

Improvements Observed:

New camera pole installed adjacent to beginning abutment left side.

Inspection Date: 4/4/2012 RC: 33 BIN: 1072571

Review Progress and Personnel Present at Inspection

Carried: 481I 481I33012096 Crossed: 298 298 33012055 CheckValue: 1,779,292,602

Inspection Submission Status:

Submitted to QC Engineer on: 4/25/2012
QC Submission Number: 353201

QC Review Completed: 5/14/2012
QC Engineer: James R. Manning

Submitted to Liaison Engineer on: 5/24/2012
Liaison Submission Number: 53204

Liaison Review Completed: 6/12/2012
Liaison Engineer: TODD M. HERMANN

Submitted for BIIS Processing on: 6/12/2012
BIIS Submission Number: .kp1

Current Status: Keypunched, Sent to BIIS
Check Value: 1,779,292,602

Personnel Present During Inspection:

Peter Riehlman - Team Leader
Rebecca Maurer - Assistant Team Leader

Inspection Date: 4/4/2012 RC: 33 BIN: 1072571

Inspection Access Requirements

Carried: 481I 481I33012096 Crossed: 298 298 33012055 CheckValue: 1,779,292,602

Equipment Required for Inspection

Access Requirement Changes WERE Noted During This Inspection.
This Listing is from the Inspection.

ACCESS CATEGORIES FOR ENTIRE BRIDGE
Required: Walking

ACCESS CATEGORIES FOR SPAN 1
Required: Walking

Inspection Date: 4/4/2012 RC: 33 BIN: 1072571

Culvert Measurements

Carried: 481I 481I33012096 Crossed: 298 298 33012055 CheckValue: 1,779,292,602

Culvert Measurements

NO CULVERT DATA FOR BIN 1072571

Standard Photos **RC: 33 BIN: 1072571**

Carried: 481I 481I33012096 Crossed: 298 298 33012055

1072571_LOCATION_MAP.JPG

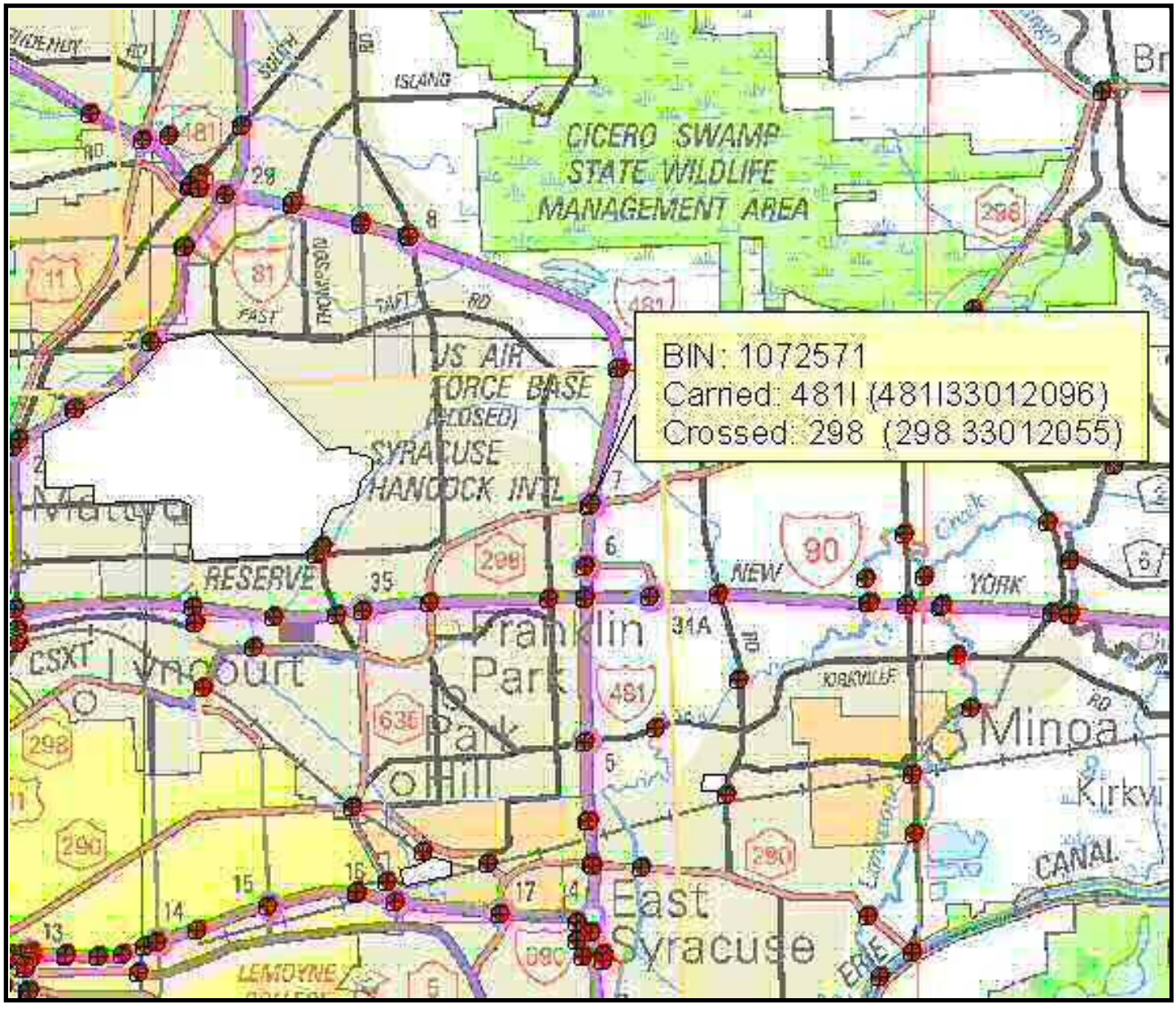

Standard Photos **RC: 33 BIN: 1072571**

Carried: 481I 481I33012096 Crossed: 298 298 33012055

1072571_QUAD_MAP.JPG

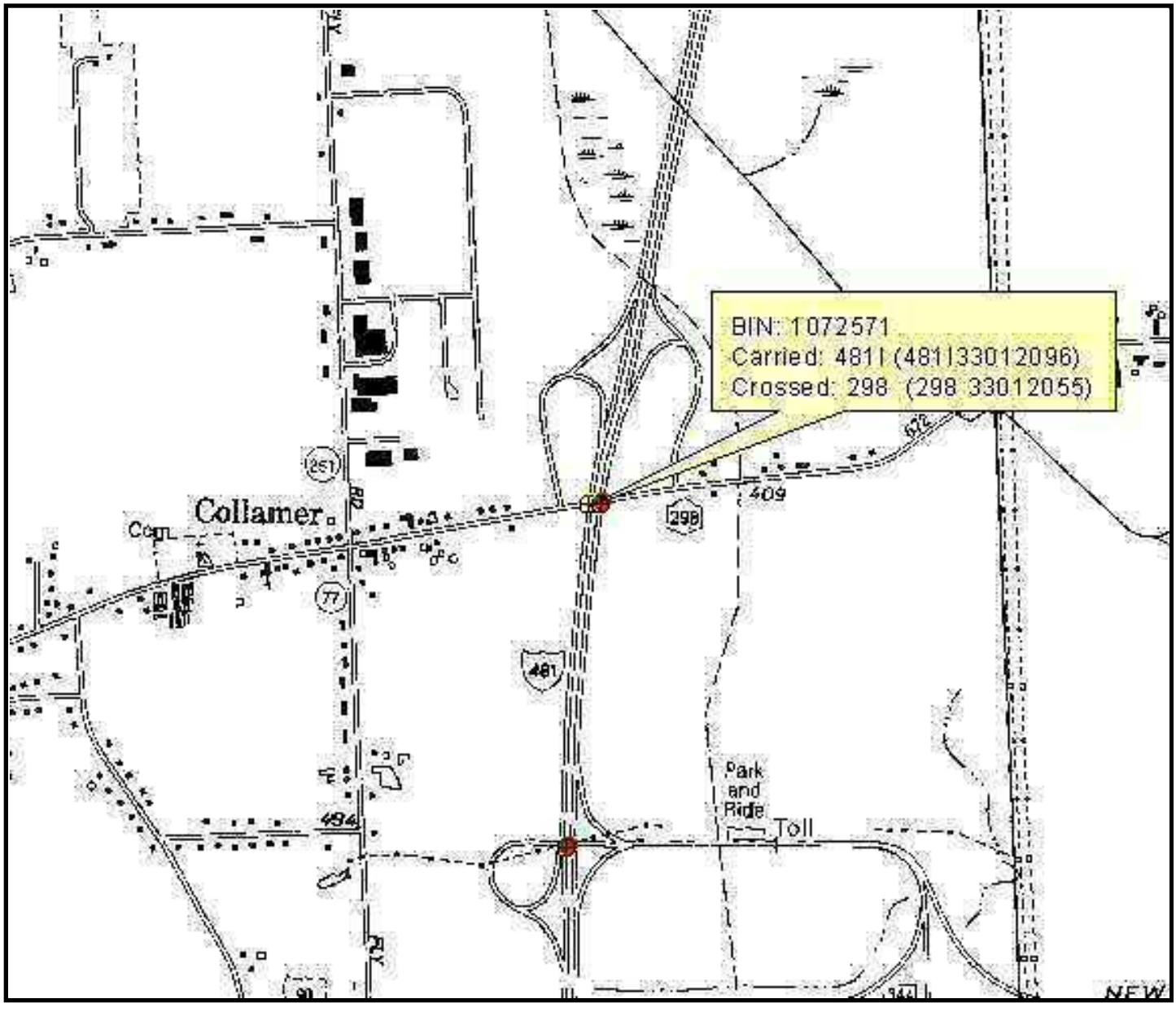

AbutmentBegin.12.jpg

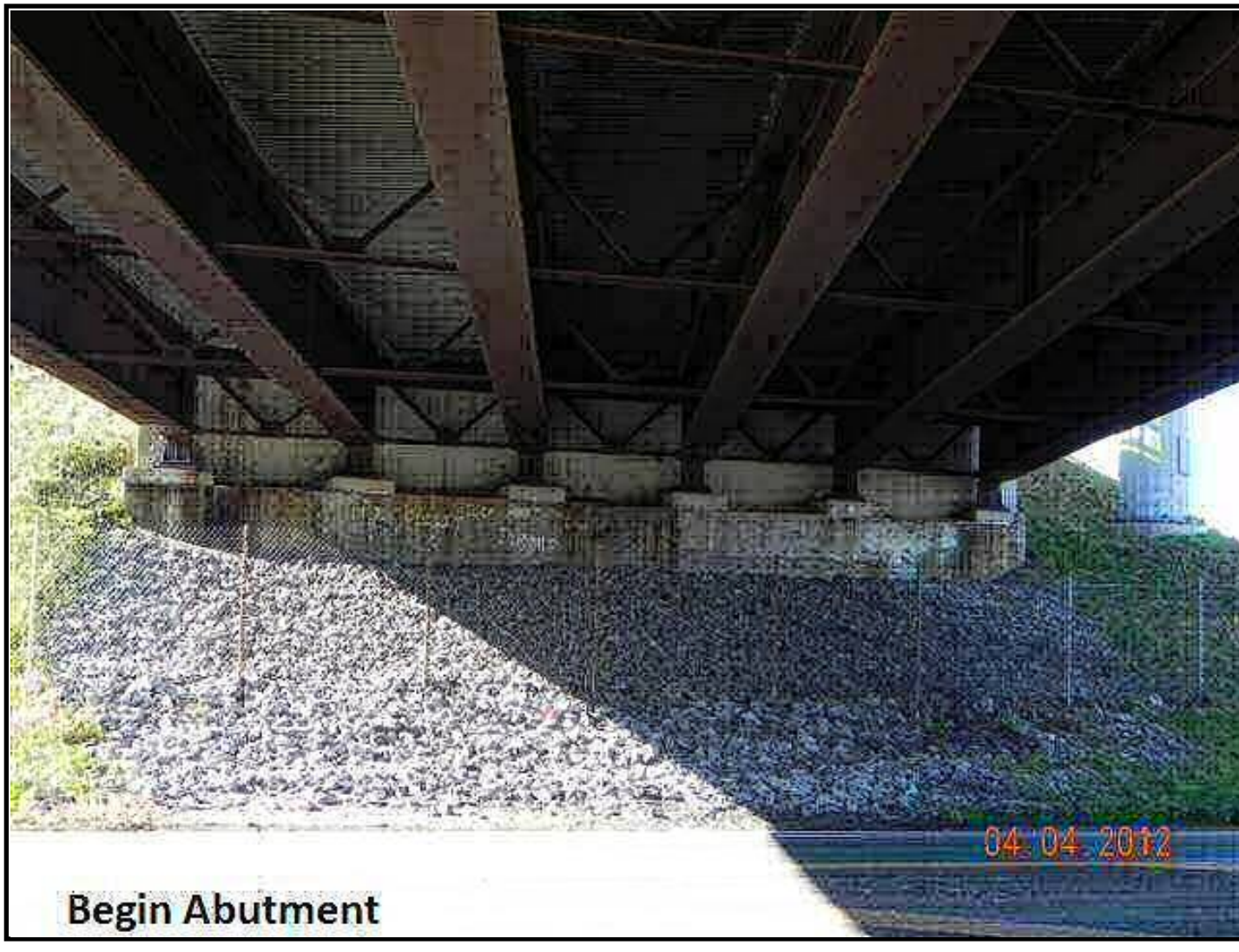

Standard Photos **RC: 33 BIN: 1072571**

Carried: 481I 481I33012096 Crossed: 298 298 33012055

ApproachBegin.12.jpg



Standard Photos RC: 33 BIN: 1072571

Carried: 481l 481l33012096 Crossed: 298 298 33012055

ApproachEnd.12.jpg



Standard Photos **RC: 33 BIN: 1072571**

Carried: 481I 481I33012096 Crossed: 298 298 33012055

ElevationSpan1.12.jpg



Standard Photos **RC: 33 BIN: 1072571**

Carried: 481I 481I33012096 Crossed: 298 298 33012055

F2CrossedSpan1Left.12.jpg

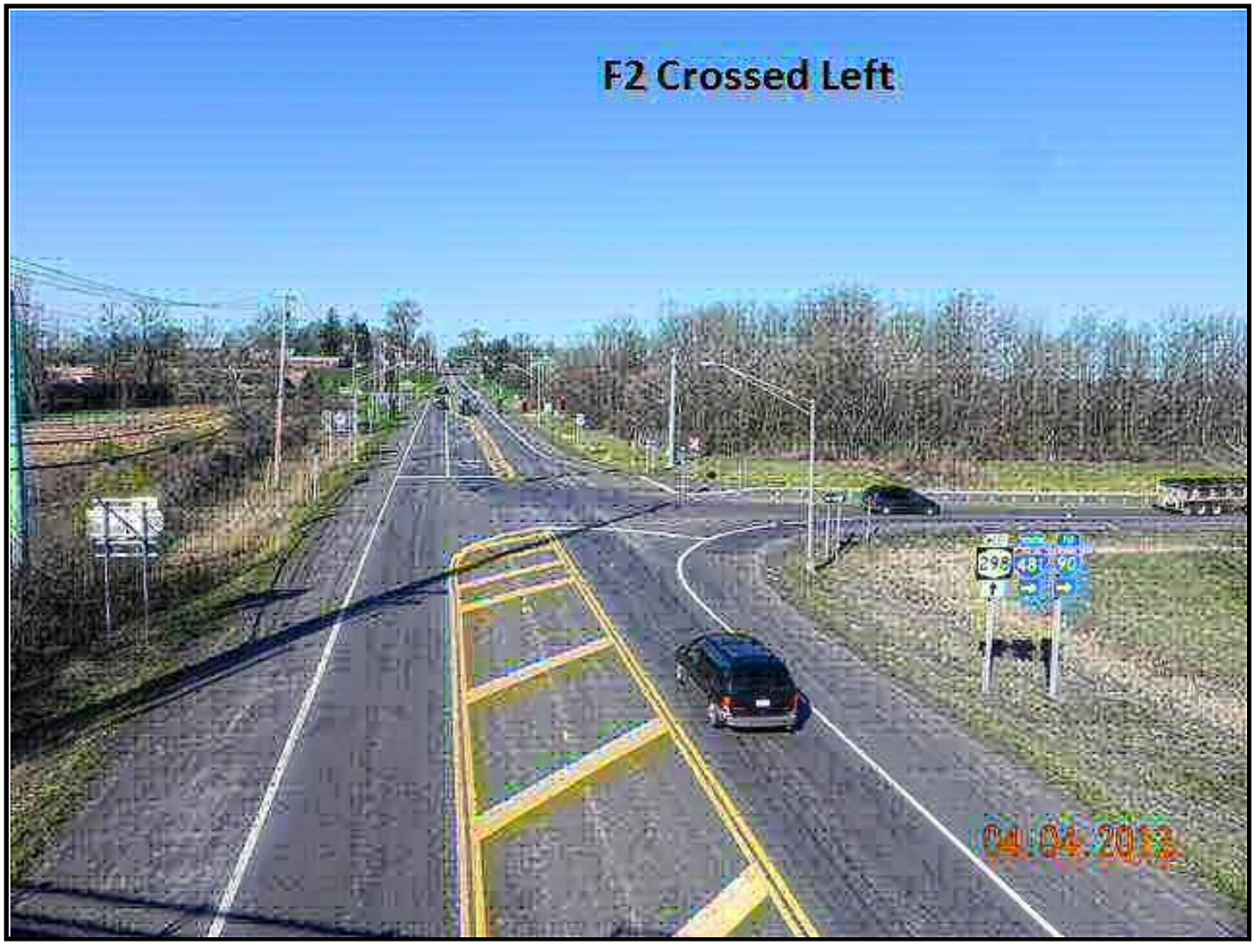

Standard Photos **RC: 33 BIN: 1072571**

Carried: 481I 481I33012096 Crossed: 298 298 33012055

F2CrossedSpan1Right.12.jpg

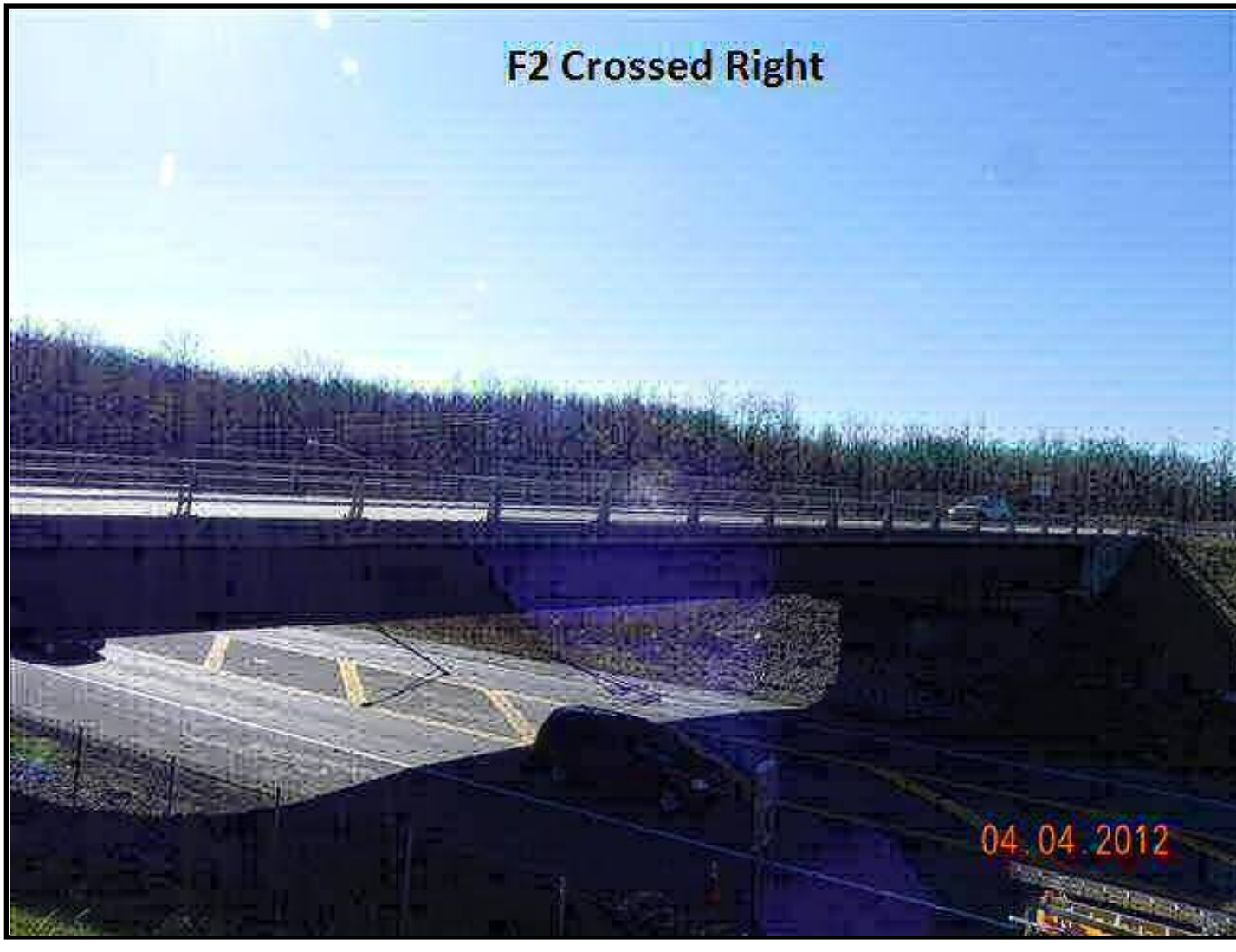

Standard Photos **RC: 33 BIN: 1072571**

Carried: 481I 481I33012096 Crossed: 298 298 33012055

FramingSpan1.12.jpg



LEVEL 1 LOAD RATING SUMMARY SHEET

Region/County Region 3/Onondaga BIN 1072571
Feature(s) Carried and Crossed I-481 Southbound/Rte. 298
Date of field inspection upon which Level 1 rating is based 2/18/2014

OVERALL BRIDGE RATTNGS (BASED ON LOWEST RATED ELEMENTS):

Total number of rating units 1

	H inventory	H operating	HS inventory	HS operating
Rating	H 33.34 (tons)	H 55.68 (tons)	HS 60.01 (tons)	HS 100.22 (tons)
Lowest rated element	Interior Girder G5	Interior Girder G5	Interior Girder G5	Interior Girder G5

Analysis method LFR Comments

Individual Rating Unit Level 1 values:

Rating unit span(s) 1

Main member ratings

	H inventory	H operating	HS inventory	HS operating
Rating	H (tons)	H (tons)	HS (tons)	HS (tons)
Lowest rated element				

Analysis method Comments

Floorbeam ratings

	H inventory	H operating	HS inventory	HS operating
Rating	H (tons)	H (tons)	HS (tons)	HS (tons)
Lowest rated element				

Analysis method Comments

Stringer ratings

	H inventory	H operating	HS inventory	HS operating
Rating	H 33.34 (tons)	H 55.68 (tons)	HS 60.01 (tons)	HS 100.22 (tons)
Lowest rated element	Interior Girder G5	Interior Girder G5	Interior Girder G5	Interior Girder G5

Analysis method LFR Comments

Certified by Date

Quality Control Engineer Signature Date
Agency or Company represented by certifier

Note:
-If connection ratings govern, record them under stringer ratings for stringer – floorbeam connection, floorbeam ratings for floorbeam-main member connections, etc.
-When Level 1 results indicated the need for load posting or other corrective action, the NYSDOT Regional Structures Engineer shall be notified immediately.
-Load ratings should be filed in the regional office within 60 days of completion of calculations.
-Bridges shall be flagged based on Level I results in accordance with the current NYSDOT flagging procedure.
-Bridge load posting, closure, etc. determinations shall be made as results are being produced.

PARSONS

100 Broadway
New York, NY 10005
Phone: 212-266-8300
Fax: 212-571-6825
www.parsons.com

TECHNICAL MEMORANDUM

FROM: Kian Siang Chau, P.E
NYSPE 082744

DATE: MARCH 19, 2014

RE: SEISMIC SCREENING SUMMARY
NEW YORK STATE DEPARTMENT OF TRANSPORTATION
D031085; PIN 3501.60; I-81

BIN: 1072571 (I-481 SB/RT 298)

This memorandum summarizes the seismic screening conducted for BIN 1072571 as part of the Interstate 81 Project in Syracuse, NY. The purpose of the screening is to determine if seismic retrofits are warranted at the superstructure to substructure connection, and if further seismic evaluation of the structure is required. This memorandum will give the screening results, retrofits required and recommendations for further seismic evaluation of the structure.

SCREENING PROCEDURE

The seismic screening was performed in accordance with the FHWA Seismic Retrofitting Manual for Highway Structures: Part 1 - Bridges, January 2006. As per the referenced manual, seismic screenings were performed for both lower level and upper level earthquake ground motion. The lower level earthquake ground motion has a reasonable likelihood of occurrence within the life of the bridge (50% probability of exceedance within a 75 year bridge life). The upper level earthquake ground motion has a finite likelihood of occurrence within the life of the bridge (7% probability of exceedance within a 75 year bridge life).

Values for the spectral acceleration for the Syracuse area used in the screening are as follows:

- Lower Level Earthquake Ground Motion for a Short Period (0.2 seconds): $S_S = 0.0251$
- Lower Level Earthquake Ground Motion for a Long Period (1.0 seconds): $S_1 = 0.0076$
- Upper Level Earthquake Ground Motion for a Short Period (0.2 seconds): $S_S = 0.139$
- Upper Level Earthquake Ground Motion for a Long Period (1.0 seconds): $S_1 = 0.047$

These values are considered constant and are the same for all seismic screenings of bridges in the Syracuse area.

The Site Class is based on the soil conditions at the bridge location. It was determined that this parameter has little effect on the results of the seismic screening because the spectral acceleration values for the Syracuse area are small. Based on this, a site class of D was used for all seismic screenings of bridges in the Syracuse area.

Bridge parameters used in the seismic screening were retrieved from the record drawings and WinBolts data.

The seismic screening takes into account the anticipated service life, importance, and the seismic exposure of the bridge to determine a seismic retrofit category (SRC). The SRC is then used to determine seismic evaluation methods and retrofit measures. There are four SRCs, A through D. Seismic retrofit category A is the lowest category; bridges in this category do not require retrofits or further seismic evaluation. Seismic retrofit category D is the highest category; bridges in this category requiring the most rigorous seismic evaluations and retrofits.

SCREENING RESULTS

The SRC for the bridge is "**C**" for lower level earthquake ground motion and "**B**" for upper level earthquake ground motion.

RETROFITS REQUIRED

No seismic retrofits are required for the bridge superstructure to substructure connection.

RECOMMENDATIONS FOR FURTHER SEISMIC EVALUATION

For the lower level earthquake ground motion, it is recommended that capacity/demand ratios for bridge components are calculated as per Section 5.4 of the referenced manual. For the upper level earthquake ground motion, it is recommended that the capacities of the bearings are checked as per Section 5.2 of the referenced manual.

Retrofit cost estimates will be provided after any further required seismic evaluations are completed.

BRIDGE DECK EVALUATION REPORT

RECOMMENDATIONS

The bridge deck inspection findings and evaluation are used as a tool for developing the scope of work and cost estimates for the development and comparison of alternatives for the overall project.

The total damaged area of the deck is 0.4% of the total deck surface area. The cores indicate the reinforcement steel is 2.5 inches to 3.0 inches below the surface of the deck. The lab test indicates that chloride ion concentrations at two sample locations are significantly higher than the corrosion threshold for steel.

Due to the age, condition and high chloride ion content of the bridge deck concrete, the bridge deck should be rehabilitated or replaced to meet the current standards and to mitigate excessive future maintenance costs.

ALTERNATIVES

- Rehabilitation Alternative - 3 inches Bonded Concrete Overlay
  - Scope

    The scope of this alternative will include the complete removal of the bridge railings, curb and safety walks, and fascias to the level of the original top of the deck. The joint will be removed. The top 2 inches of the entire deck will be removed and areas of deteriorated concrete must be removed to at least 1 inch below the level of the reinforcement steel and to the horizontal and vertical limit of any detectable hollow areas. Additionally, any further areas of deteriorated concrete detected will require full depth removal. Any corrosion of the reinforcement steel will be removed by sandblasting or hydro-blasting. The proposed deck overlay will be a 3 inches thick bonded concrete overlay yielding a nominal 9.5 inches standard thickness deck. A new single-sloped concrete barrier and a new armorless joint will be installed. The Level 1 Load Rating for the final condition was found to be acceptable.

- Useful Life Expectancy

  The removal of the top 2 inches of the existing deck will remove a portion of the deck with high chloride ion concentrations. It can be anticipated that chloride ions will continue to migrate into the remaining deck to the reinforcing steel resulting in further corrosion-related deterioration of the deck surface. Concrete admixtures will be included in the bonded concrete overlay to impede the continued penetration of chloride into the deck from the surface. This alternative will result in an extended useful life expectancy estimated at 20 years.

The design life of the project is 30 years (ETC + 30). This alternative does not meet the project objectives of obtaining 30 years of service life and is not evaluated further.

- Rehabilitation Alternative – 100% Deep Removal and Partial Deck Reconstruction
  - Scope

    The scope of this alternative will include the complete removal of the bridge railings, curb and safety walks, and fascias to the level of the original top of the deck. The joint will be removed. The scope of this alternative will include partial depth reconstruction with removal of the concrete to at least 1 inch below the top mat of the reinforcement steel. Additionally, any further areas of deteriorated concrete detected will require full depth removal. Any corrosion of the reinforcement steel will be removed by sandblasting or hydro-blasting. Due to the condition of the deck, full depth removal is not likely and not included in the cost estimate. The proposed deck partial reconstruction will be a nominal 5.75 inches thick concrete deck yielding a 9.5 inches standard thickness deck. A new single-sloped concrete barrier and a new armorless joint will be installed. The Level 1 Load Rating for the final condition was found to be acceptable.
  - Useful Life Expectancy

    This alternative will provide a useful life expectancy is estimated at 35 years.
  - Cost Estimate

    The estimated cost for this alternative is $533,000. The Engineer's Opinion of Probable Construction Cost worksheet is at the end of this section.

- Replacement Alternative – Cast-In-Place Concrete
  - Scope

    This scope of this alternative will include the complete demolition of the existing bridge deck, bridge railings, curb and safety walks, fascias and bridge joint. The bridge deck will be replaced with a new 9.5 inches standard thickness concrete deck. A new single-sloped concrete barrier and a new armorless joint will be installed. The Level 1 Load Rating for the final condition was found to be acceptable.
  - Useful Life Expectancy

    This alternative will provide a useful life expectancy is estimated at 40+ years.
  - Cost Estimate

    The estimated cost for this alternative is $745,000. The Engineer's Opinion of Probable Construction Cost worksheet is at the end of this section.

- Replacement Alternative – Pre-cast Concrete Deck Panels
  - Scope

    The scope of this alternative is similar to the Cast-In-Place Concrete Deck Replacement Alternative except the deck structure will be precast panels. This alternative offers reduced construction time over conventional construction.
  - Useful Life Expectancy

    This alternative will provide a useful life expectancy is estimated at 40+ years.
  - Cost Estimate

    The comparison of accelerated construction to conventional construction is beyond the current scope of this evaluation.

IN-DEPTH INSPECTION REPORT

D031085 P.I.N. 3501.60

ELEMENT SPECIFIC BRIDGE WORK

B.I.N. 1072572

TEAM LEADER Andrew P. Thompson 84914
NYSPE LICENSE #

ASSISTANT TEAM LEADER Mike Savino

FEATURE CARRIED I-481 Northbound

FEATURE CROSSED Route 298

DATE FIELD WORK BEGAN 12/18/13

DATE FIELD WORK COMPLETED 2/18/14

TABLE OF CONTENTS

- STRUCTURE IDENTIFICATION
- INTRODUCTION
- PROJECT LOCATION MAP
- IN-DEPTH CONDITION DOCUMENTATION
- PLANS & SKETCHES
- IN-DEPTH PHOTO DOCUMENTATION
- ASBESTOS SAMPLING SURVEY
- LATEST BIENNIAL INSPECTION REPORT

STRUCTURE IDENTIFICATION

a. Bridge Identification Number (BIN): 1072572
b. Reference Marker: 481I 3301 2096
c. Region: NYSDOT Region 3
d. County: Onondaga
e. Town: Dewitt
f. Feature Carried: I-481 Northbound
g. Feature Crossed: Route 298

INTRODUCTION

a. Bridge History
   i. Year Built: 1985
   ii. Bridge Type: Single Span, Steel Multi-girder
   iii. Span Length: 146 feet
   iv. Out-to-Out Width: 42 feet
   v. Structural Ratings and Rankings
      1. Federal Sufficiency: 92.2 (April 2012)
      2. Condition Rating: 5.609 (April 2012)
      3. General Recommendation: 6
   vi. Live Load Posting (HS25): No
   vii. National Highway System (NHS): Yes
   viii. Previous work Done: Waterproof bridge deck (1999). Joints replaced, misc. abutment repairs & repave approaches (2006).
   ix. Planned Future Work: N/A
b. Highway Classification
   i. Functional Classification: Urban Principle Arterial - Interstate
   ii. Traffic Volumes

YEAR	AADT Projected
2014	17118
2034	25436
2054	37796

   iii. Plan for Maintenance and Protection of Traffic:
   Maintenance and Protection of traffic will be achieved by staged construction.

PROJECT LOCATION MAP

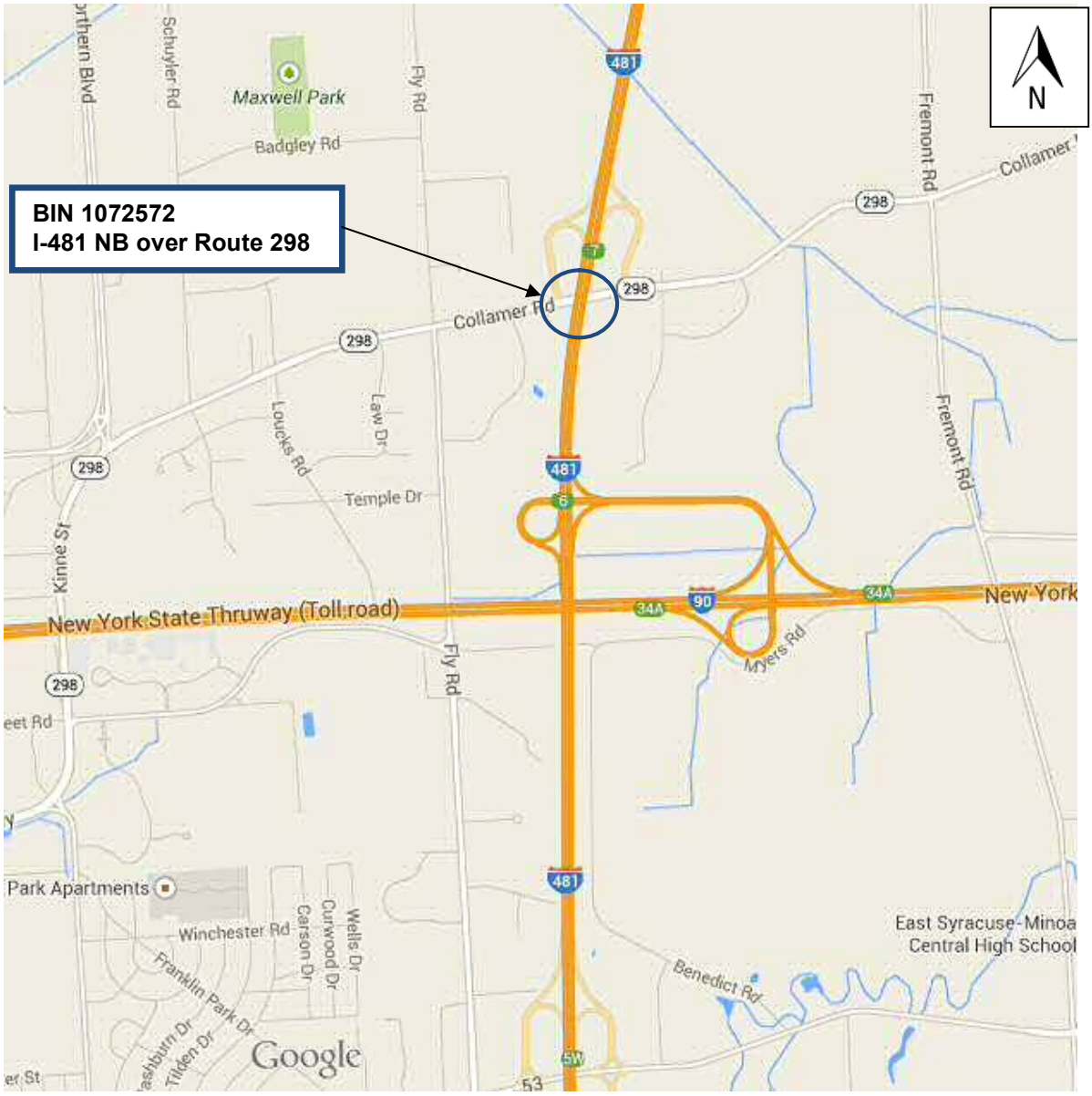

IN-DEPTH CONDITION DOCUMENTATION

NYS DEPT. OF TRANSPORTATION BRIDGE **BIN** 1072572 **SHEET:** 1 **OF** 3 **DATE:** 2/18/2014

FEATURE CARRIED: I-481 NB
FEATURE CROSSED: ROUTE 298

TEAM LEADER: A.THOMPSON
A. TEAM LEADER: M. SAVINO

ITEM	REMARKS	PHOTO N0.
TP 349-22	Begin Abutment - Joint with Deck: The begin joint is expansion. The visible portion of the compression seal is detached from the header for most of the joint length (Photo 1). The headers are in good condition. There is evidence of recent leakage underneath in the form of rust staining on the seats and backwall (Photo 2).	1,2
TP 349-23	End Abutment - Joint with Deck: The end joint is fixed. The seal and headers are in good condition. There is evidence of recent leakage underneath in the form of rust staining on the seats and backwall (Photo 3).	3
TP 349-24	Begin Abutment – Bearings: The bearings are expansion high rockers. The 2012 Biennial Inspection Report rated Begin Abutment – Bearings 4 due to delamination on the plates and rocker on Bearing 5. The bearing has some pack rust under the rockers but appears to be functioning properly (Photo 24). The remainder of the bearings are in better condition with only minor rusting.	24
TP 349-26	Begin Abutment – Seats and Pedestals: Pedestal 1 has a 6” square x 2” deep spall with no exposed rebar (Photo 4). The left face of Pedestal 2 has a 1/16” wide x 15” long crack but does not sound hollow (Photo 2). The remaining seats and pedestals have some hairline cracking.	2,4
TP 349-27	End Abutment – Seats and Pedestals: Fascia Pedestal 5 has a 1/16” wide crack on its left face with no hollowness (Photo 5). The remainder of the seats and pedestals have scattered hairline cracking (Photo 6).	5,6
TP 349-28	Begin Abutment – Backwall: There is a 6’ long x 1’ high max. x 1.5” deep spall in Bay 1 at the top right (Photo 7). Bay 2 at the center top has a 2’ long x 5” high x 1” deep spall (Photo 8). There is a 1’ wide x 6” high x 2” deep spall at the top right (Photo 9). The remainder has rust staining and hairline cracking.	7-9
TP 349-30	Begin Abutment – Stem: There is a hollow area at the bottom under Bay 1 measuring 13” wide x 8” visible height (Photo 10). Some 1/16” wide cracking was noted around previously patched areas under Bay 3 (Photo 11). The remainder has isolated locations of hairline cracking (Photo 12).	10-12
TP 349-31	End Abutment – Stem: There are (2) hollow areas at the bottom under Bay 1 measuring 21” wide x 26” visible height and 7” wide x 17” visible height (Photo 13). There is 1/32” wide cracking in Bays 2 and 4 which extends into the seat (Photo 6). The remainder has isolated locations of hairline cracking and staining (Photo 14).	6,13,14

ITEM	REMARKS	PHOTO N0.
TP 350-21	Deck Elements - Sidewalks and Fascias: Sidewalks: Both safety walks have light map cracking but sound solid (Photo 15). Fascias: Both fascias have map cracking throughout and sound solid (Photo 16).	15 16
TP 350-22	Deck Elements – Railings/Parapets The bridge railing and posts are in good condition. Snow fencing is present over the travel lanes on both sides of the bridge. The snow fence consists of steel pipe posts located at rail posts, steel pipe rails, and chain link fencing. There are 8 posts on the left and 7 on the right. On the left the bottom pipe rails at Posts 3, 5, and 7 are rusted through and detached on one or both sides. The bottom rails at Posts 2, 4, and 6 are rusted but intact. On the right the bottom pipe rails at Posts 3, 4, and 6 are rusted through and detached on one or both sides (Photo 17). The bottom rails at Posts 2 and 5 are rusted but intact. The remainder of the snow fencing is in good condition.	17
TP 350-27	Superstructure – Structural Deck The structural deck is an 8.5" thick concrete mono deck with SIP forms. No hollow or cracked areas were found (Photo 18). There is one patch in the right lane near the centerline of roadway adjacent to the begin joint with deck header (Photo 19). The patch is 6.5' wide x 8" long and is in good condition. See Deck Deterioration Plan. The deck has SIP forms, and the underside is exposed only at the overhangs. The left overhang has hairline cracking at +/-2.5’ spacing throughout (Photo 20). The right overhang is in good condition. The SIP forms are in good condition except for 3 locations of missing forms. There is a 2’ length missing in Bay 3 near midspan (Photo 21). Near the end there is a 2’ length missing in Bay 2 and a 5’ length missing in Bay 3 (Photo 22). The exposed concrete at these locations is in good condition.	18-22
TP 350-28	Superstructure – Primary Members: The steel girders are in good condition with no significant section loss (Photo 23).	23
TP 350-30	Superstructure – Paint: The girders are made of weathering steel and form a protective coating. There are some locations where the coating is coming off in the form of small flakes (Photo 23). The remainder is in good condition.	23

NYS DEPT. OF
TRANSPORTATION BRIDGE

BIN 1072572

SHEET: 3 OF 3
DATE: 2/18/2014

FEATURE CARRIED: I-481 NB
FEATURE CROSSED: ROUTE 298

TEAM LEADER: A.THOMPSON
A. TEAM LEADER: M. SAVINO

ITEM	REMARKS	PHOTO N0.
	Special Emphasis Inspection Required Non-Redundant/Fracture Critical Members - No Pin and Hangers - No Fatigue-Prone Welds - No Non-Categorized Fatigue-Prone Details - No Other - No	

PLANS & SKETCHES

Opens 4/19/94

Date - 3-19-86
J Dussing

D250094

REG. NO. REG. NO.	STATE	FEDERAL AID PROJECT NO.	SHEET NO.	TOTAL SHEETS
	NEW YORK	I-481-2(152)	221	342

INTERSTATE RTE. 571 EXTENSION (I-481)
COLLAMER INTERCHANGE TO NORTHERN BLVD.
ONONDAGA COUNTY

OFFICIAL PROJECT IDENTIFICATION NO. 3107.06

Rev 3/28/94 P.J.R.
2192
Dashed
3/3
Bruce 4/10
Bruce 4/12
04/08
Bruce 4/26
P Riendl 4/4/1

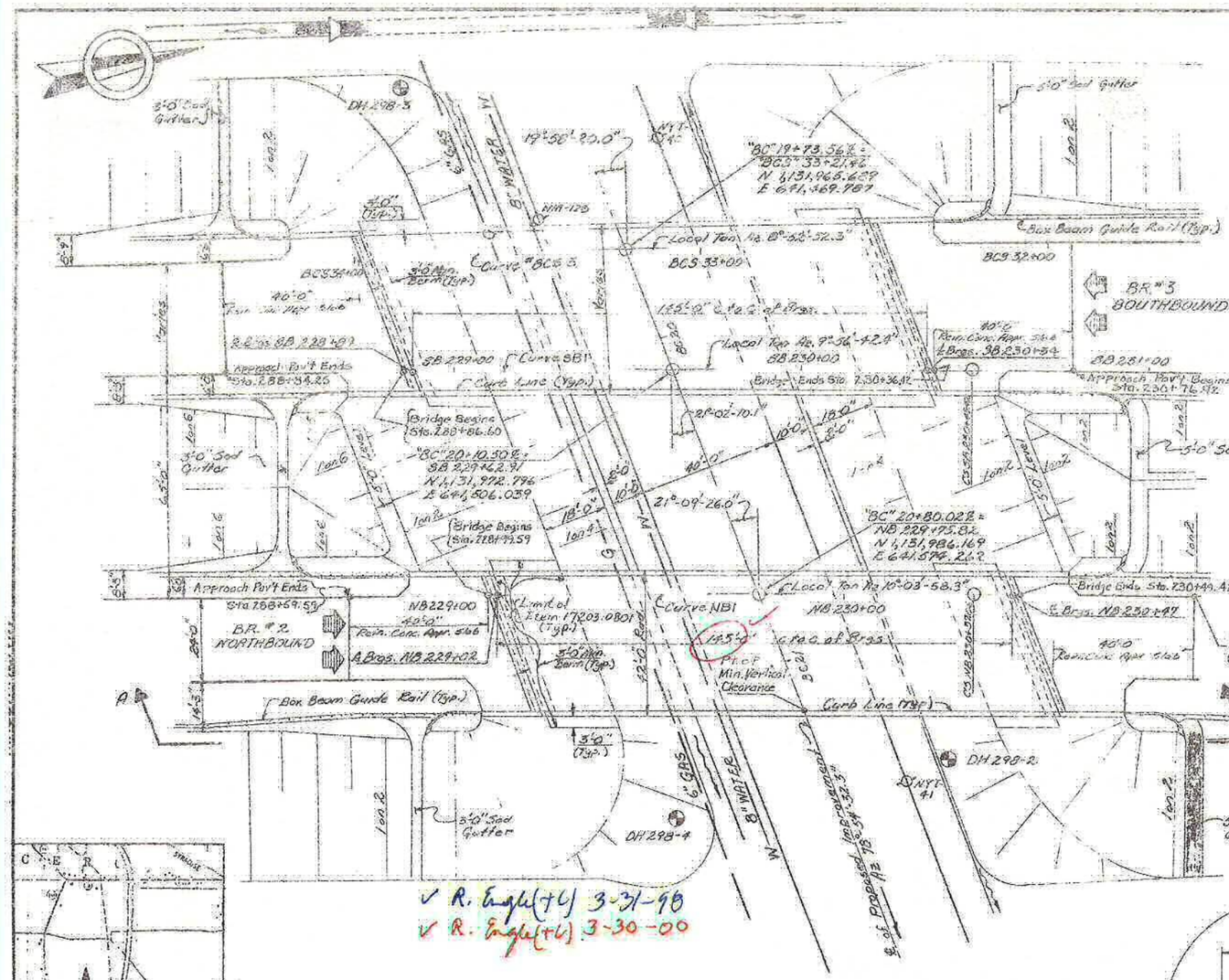
DH 298-3
5'-0" Sod Gutter
6" GAS
8" WATER
NM-128
"BC" 19+73.56 ± "BCS" 33+21.42 N 1,151,966.628 E 641,369.787
Box Beam Guide Rail (Typ.)
BCS 32+00
BCS 33+00
BR. #3 SOUTHBOUND
Local Tan 46.8°-58'-32.3"
Curve "BCS"
Curve SB1
SB 229+00
SB 230+00
Bridge Ends Sta. 230+36.42
Approach Pvt Begins Sta. 230+76 ±
Bridge Begins Sta. 228+86.60
"BC" 20+10.50 ± SB 229+42.31 N 1,151,972.796 E 641,506.039
Bridge Begins Sta. 228+72.59
"BC" 20+80.02 ± NB 229+75.84 N 1,151,986.169 E 641,576.21?
Curve NB1
NB 229+00
NB 230+00
Approach Pvt Ends Sta. 228+34.25
Approach Pvt Ends Sta. 228+69.59
BR. #2 NORTHBOUND
Limit of Item 17203.0801 (Typ.)
Bridge Ends Sta. 230+49.42
Approach Pvt Begins (Sta. 230+98.97)
Box Beam Guide Rail (Typ.)
DH 298-2
DH 298-4
NYT #1
Curb Line (Typ.)
Min. Vertical Clearance
Local Tan N 78°-54'-32.3" W
Local Tan N 10°-03'-58.3" W
Varies
Lane 1
Lane 2
Lane 3
Lane 4
Lane 5
Lane 6
Lane 7
Lane 8
Lane 9
Lane 10
Lane 11
Lane 12
Lane 13
Lane 14
Lane 15
Lane 16
Lane 17
Lane 18
Lane 19
Lane 20
Lane

FED. RD. REG. NO.	STATE	FEDERAL AID PROJECT NO.	SHEET NO.	TOT. SHTS.
	NEW YORK	I-481-2(18)8	233	31

INTERSTATE RTE. 571 EXTENSION (I-481)
COLLAMER INTERCHANGE TO NORTHERN BLVD.
ONONDAGA COUNTY

CAPITAL PROJECT IDENTIFICATION NO. 3107.00

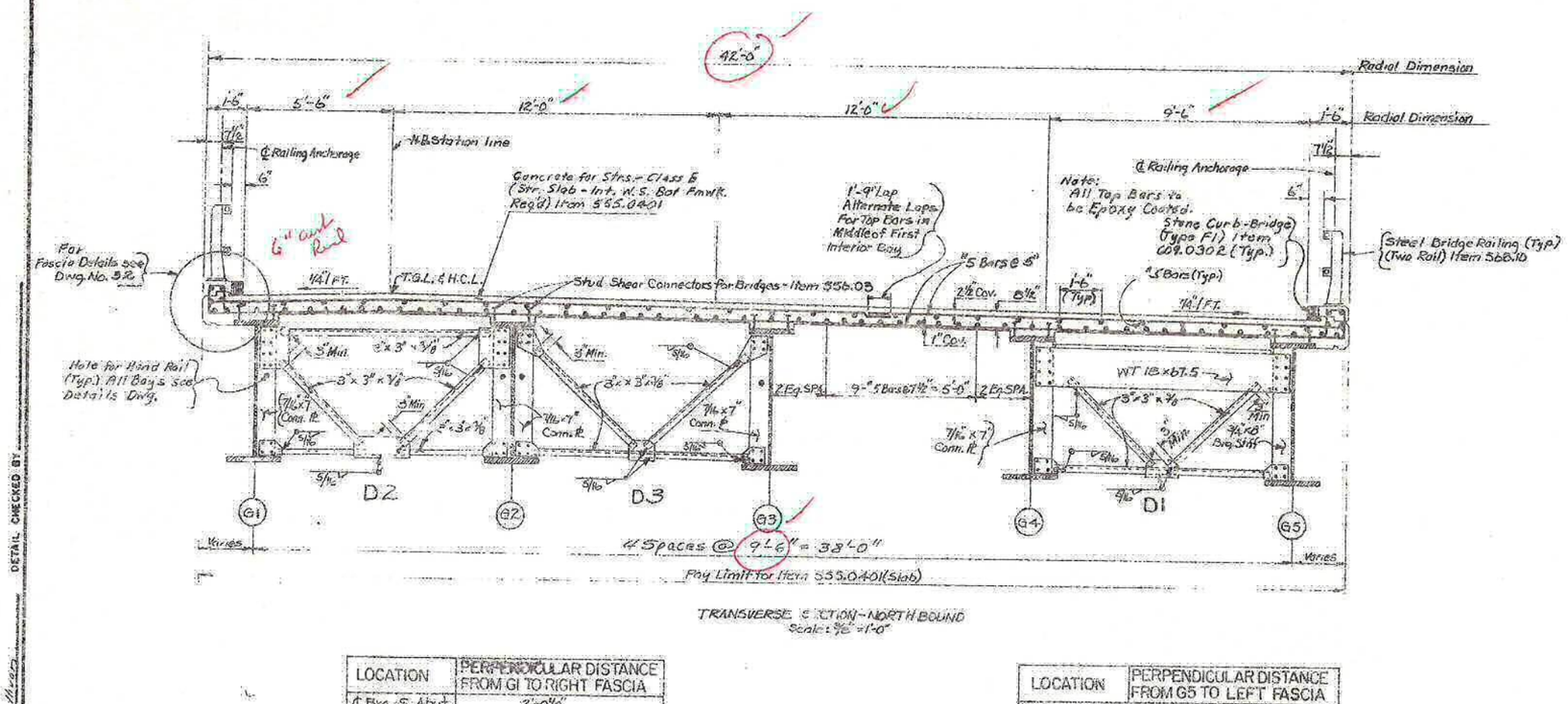

TRANSVERSE SECTION - NORTH BOUND
Scale: ⅜" = 1'-0"

LOCATION	PERPENDICULAR DISTANCE FROM G1 TO RIGHT FASCIA
℄ Brg.-S. Abut.	2'-0⅛"
¼ L	2'-2¼"
½ L	2'-3"
¾ L	2'-2⅜"
℄ Brg.-N. Abut.	2'-0⅞"

LOCATION	PERPENDICULAR DISTANCE FROM G5 TO LEFT FASCIA
℄ Brg.-S. Abut.	1'-10⅝"
¼ L	1'-9¼"
½ L	1'-9⅛"
¾ L	1'-10⅝"
℄ Brg.-N. Abut.	2'-0⅛"

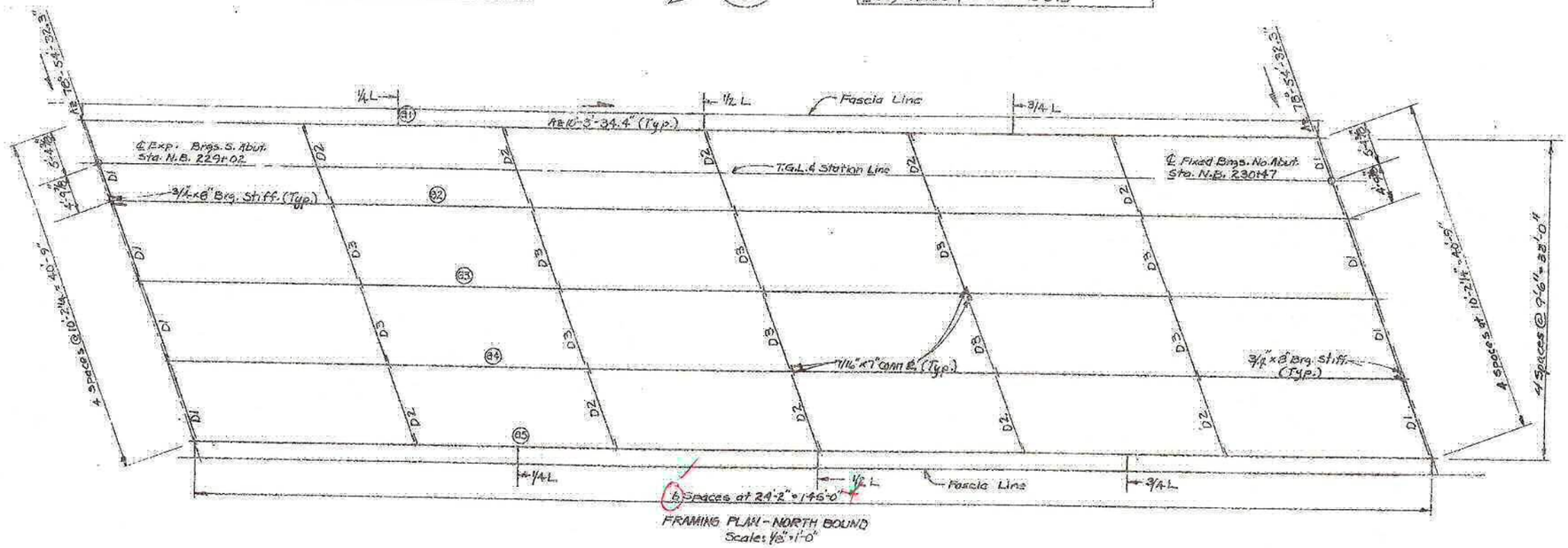

FRAMING PLAN - NORTH BOUND
Scale: ⅛" = 1'-0"

DIAPHRAGMS NOTES:

Where holes are indicated, connections shall be 7/8" diameter high-strength bolts.

Cross frames may be fabricated to fit the girders in their erected position and cambered shape, but deflected vertically under the dead load of the steel work only.

The Contractor may place diaphragms on the side of the bearing stiffeners or stiffener connection plates as necessary to correct alignment provided the work will be in accordance with other structural details.

Snipe the outstanding leg of all angles and plates 1" minimum.

Tapered or flat shim plates may be used in the connection between skewed diaphragms and the bearing stiffeners or stiffener connection plates. Variable thicknesses of shim plates may be used. The minimum thickness of shim plate shall be 1/8" with a maximum number of three shim plates permitted at any connection. The total thickness of all shim plates used at any connection shall not exceed 1". Shim plates shall have the dimensions of the faying surface. The shim material shall conform to ASTM Designation A36, except that on unpainted structures, the shim material shall conform to ASTM Designation A588. No additional payment will be made for furnishing and placing the shim plates.

Both the gusset plate and flange are to be same type of steel.

Field welding to the gusset plate will not be permitted.

NOTES:
For Curb Details see Dwg. 33
For Fascia Details see Dwg. 32
For Girder Details see Dwg. 14
For Stay-in-Place Form Details see Dwg.
For Haunch Details see Dwg. 32

STATE OF NEW YORK
DEPARTMENT OF TRANSPORTATION
DIVISION OF DESIGN AND CONSTRUCTION

INTERSTATE ROUTE 481
BRIDGES NO. 2(N.B.) AND 3(S.B.)
OVER ROUTE 298

N.B. - TRANSVERSE SECTION AND FRAMING PLAN

DESIGNED BY: PDA, ENG. | DATE DRWG. 9/20/81
DETAILED BY: [illegible] | DRAWING NO. 13 OF 30

DESIGN CHECKED BY
DETAIL CHECKED BY

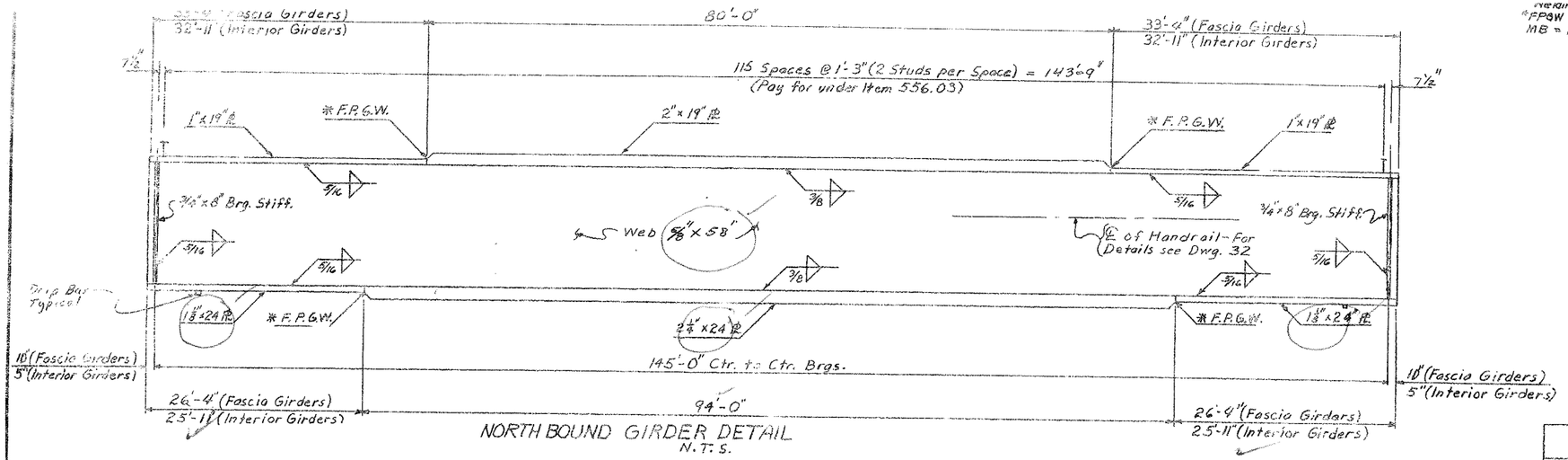

NORTH BOUND GIRDER DETAIL
N.T.S.

Bearing Notes:
* FPGW = Full Penetration Groove Weld
MB = Mill to Bear

REG. NO. REG. NO.	STATE	FEDERAL AID PROJECT NO.	SHEET NO.	TOTAL SHEETS
	NEW YORK	I-481-2(182)	234	312

INTERSTATE RTE. 571 EXTENSION (I-481)
COLLAMER INTERCHANGE TO NORTHERN BLVD.
ONONDAGA COUNTY

CAPITAL PROJECT IDENTIFICATION NO. 3107.00

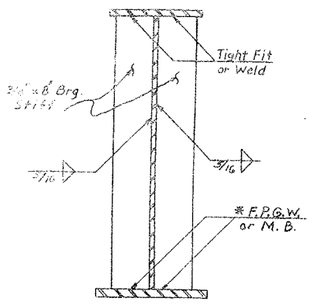

BRG. STIFF.

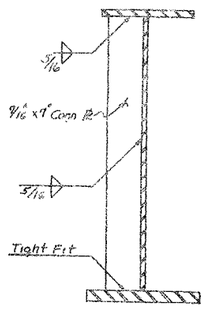

CONN. PL - FASCIA GIRDER

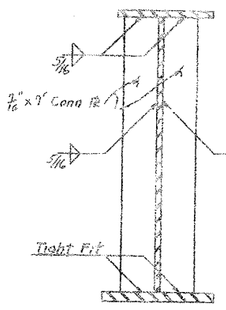

CONN. PL - INTERIOR GIRDER

GIRDER SECTIONS
N.T.S.

CAMBER TABLE NORTH BOUND		¼ PT	MID PT	¾ PT
GIRDERS / 1 THRU 5	(I) Vertical Curve (ft.)	.045	.060	.045
	(S) Steel D.L. (ft.)	.105	.140	.105
	(C) Concrete D.L. (ft.)	.296	.394	.296
	(SI) Superimposed D.L. (ft.)	.077	.103	.077
	Total (ft.)	.523	.697	.523

CAMBER NOTES

The total camber as tabulated is assumed to be measured vertically to the top of full camber web from a straight line drawn from the intersection of top of web and centerline of bearings at one end of the girder to the intersection of top of web and centerline of bearings at the other end of the girder.

The camber labeled "Vertical Curve" in the table is the camber required in the girder to cause the girder to follow the vertical curve.

The camber labeled "Steel D.L." in the table is the camber required in the girder to offset the deflection due to the dead load weight of the steel in the girder.

The camber labeled "Concrete D.L." in the table is the camber required in the girder to offset the deflection due to the dead load weight of the concrete slab.

The camber labeled "Superimposed D.L." in the table is the camber required in the girder to offset the deflection due to the weight of the superimposed dead load, that is, the curb, sidewalk, railing and future wearing surface.

Cambers listed in the table as positive are upward cambers.

Cambers listed in the table as negative are downward cambers.

The cambers are tabulated in decimals of a foot.

HAUNCH TABLE NORTH BOUND		℄ Bearings S. Abut.	¼ PT.	MID PT.	¾ PT.	℄ Bearings N. Abut.
GIRDER 1	(A) Req'd bottom of Slab Elevation	441.18	440.94	440.67	440.36	440.01
	(B) Top of Steel El. (Field Meas.)					
	(C) = (A) - (B)					
	(D) Concrete + S.D.L. Deflection	0	0.37	0.50	0.37	0
	(E) Depth of Haunch required = (C) + (D) (ft.)					
GIRDER 2	(A) Req'd bottom of Slab Elevation	441.17	440.92	440.64	440.33	439.98
	(B) Top of Steel El. (Field Meas.)					
	(C) = (A) - (B)					
	(D) Concrete + S.D.L. Deflection	0	0.37	0.50	0.37	0
	(E) Depth of Haunch required = (C) + (D) (ft.)					
GIRDER 3	(A) Req'd bottom of Slab Elevation	440.95	440.69	440.41	440.09	439.75
	(B) Top of Steel El. (Field Meas.)					
	(C) = (A) - (B)					
	(D) Concrete + S.D.L. Deflection	0	0.37	0.50	0.37	0
	(E) Depth of Haunch required = (C) + (D) (ft.)					
GIRDER 4	(A) Req'd bottom of Slab Elevation	440.73	440.47	440.18	439.86	439.51
	(B) Top of Steel El. (Field Meas.)					
	(C) = (A) - (B)					
	(D) Concrete + S.D.L. Deflection	0	0.37	0.50	0.37	0
	(E) Depth of Haunch required = (C) + (D) (ft.)					
GIRDER 5	(A) Req'd bottom of Slab Elevation	440.50	440.24	439.95	439.63	439.28
	(B) Top of Steel El. (Field Meas.)					
	(C) = (A) - (B)					
	(D) Concrete + S.D.L. Deflection	0	0.37	0.50	0.37	0
	(E) Depth of Haunch required = (C) + (D) (ft.)					

DESIGN LOAD TABLE/GIRDER		UNIT LOAD/FT
DL	Slab	1.009 K/ft.
	Haunch	0.047 K/ft.
	Girder	0.376 K/ft.
	S.I.P. Forms	0.152 K/ft.
	Diaphragms	0.030 K/ft.
	Total	1.614 K/ft.
SDL	Safety walks	0.024 K/ft.
	Future Parapet	0.200 K/ft.
	Future W. S.	0.156 K/ft.
	Total	0.380 K/ft.

MOMENT & SHEAR TABLE			℄ BRGS.	MID SPAN
GIRDERS 1 THRU 5	DL	MOMENT	0	4206
		SHEAR	116.0	0
	SDL	MOMENT	0	1117
		SHEAR	30.8	0
	LL (+)	MOMENT	0	2390
		SHEAR	74.1	0

Live Load Moments and Shears include Impact.
Moments are expressed as foot kips
Shears are expressed as kips.

Notes:
For Handrail Details See Dwg. 32
For Stud Shear Connector Details See Dwg. 32
All Structural steel to be unpainted ASTM A 588
Clip Flanges at ends of Fascia Girders See Detail Dwg. 32
For Drip Bar Details see Dwg. 33

STATE OF NEW YORK
DEPARTMENT OF TRANSPORTATION
DIVISION OF DESIGN AND CONSTRUCTION

INTERSTATE ROUTE 481
BRIDGES NO. 2(S.B.) AND 3(S.B.)
OVER ADV. 296

N.B. - GIRDER DETAILS

FED. ENG. [illegible]
DATE MADE 9/30/71
SHEET NO. 14 OF 35

179e (7/68)

3/3 1072572

D259214

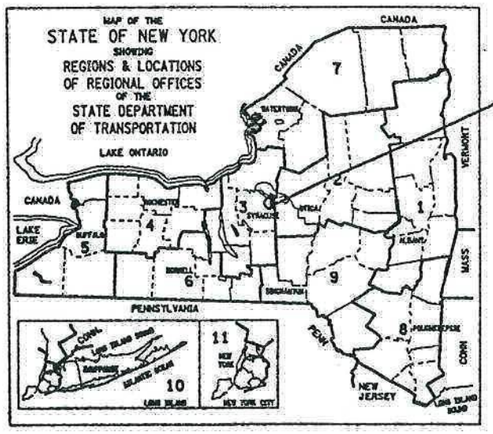

PROJECT LOCATION

THIS IS A BRIDGE REHABILITATION PROJECT ON VARIOUS BRIDGES ON INTERSTATE 481, LOCATED IN THE TOWNS OF CICERO AND DEWITT IN ONONDAGA COUNTY. THIS WORK CONSISTS OF BRIDGE JOINTS, BEARINGS, BRIDGE RAIL AND CONCRETE REPAIR OF SUBSTRUCTURES. THERE ARE 28 BRIDGES IN THE PROJECT BEGINNING AT REFERENCE MARKER 481I-3301-1000 SOUTH OF THE CITY OF SYRACUSE AND ENDING AT REFERENCE MARKER 481I-3301-2143. I481 INTERCHANGE NORTH OF THE CITY.

STATE OF NEW YORK
DEPARTMENT OF TRANSPORTATION
OFFICE OF ENGINEERING

BRIDGE REHABILITATION PROJECT (ELEMENT SPECIFIC)
VARIOUS BRIDGES ON INTERSTATE 481
TOWNS OF DEWITT AND CICERO

VOLUME 1 OF 2

432 SHEETS ONONDAGA COUNTY CONTRACT D259214

F.A. PROJECT

STANDARD SHEETS

M203-4, M203-5, M203-6R1, M603-1
M606-32, M606-33, M606-34,
M619-3R1, M619-4, M619-5
M685-1, M685-2R1, M685-3R1
M685-4R1, M685-5R1, M403-1, M203-4,
M203-5, M203-6R1, M603-1

ALL WORK CONTEMPLATED UNDER THIS CONTRACT IS TO BE COVERED BY AND IN CONFORMITY WITH THE STANDARD SPECIFICATIONS (METRIC UNITS) OF JANUARY 2, 2002, AS AMENDED BY ADDENDA NOS. 1 AND 2, EXCEPT AS MODIFIED ON THESE PLANS AND IN THE ITEMIZED PROPOSAL.

CONTRACTOR'S NAME_____
AWARD DATE_____
COMPLETION DATE_____
FINAL ACCEPTANCE DATE_____
REGIONAL DIRECTOR_____
ENGINEER IN CHARGE_____
FINAL COST TOTAL_____

FISCAL SHARE	COST(S)

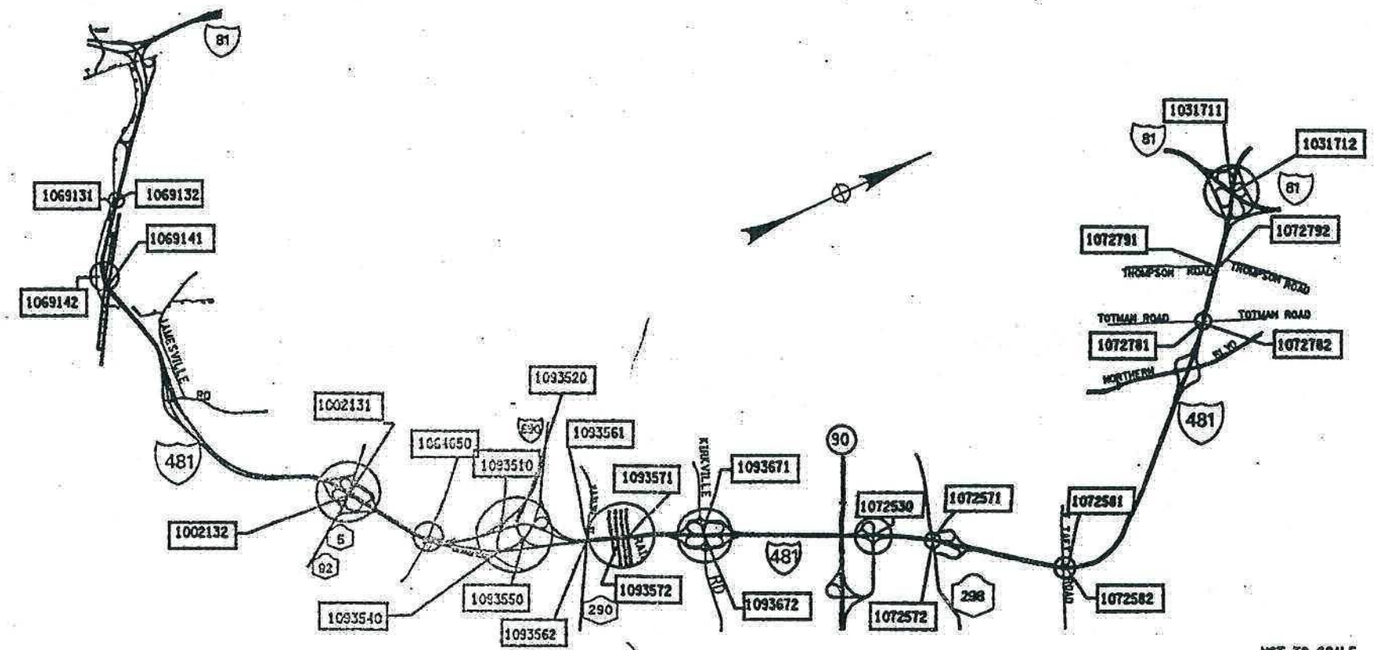

NOT TO SCALE

PROJECT LOCATION

BRIDGE REHAB. PROJ.- ELEMENT SPECIFIC			
VARIOUS BRIDGES ON INTERSTATE 481			
TOWNS OF DEWITT AND CICERO			
ONONDAGA COUNTY			
FED. ROAD REG. NO.	STATE	SHEET NO.	TOTAL SHEETS
1	N.Y.	1	432
FEDERAL AID PROJECT NO.			
CAPITAL PROJECT IDENTIFICATION NO. 3056.13			
INDEX ON SHEET NO. 5 & 6			

RECOMMENDED BY John E. Fritz 9/04/02
REGIONAL DESIGN ENGINEER DATE

RECOMMENDED BY Myron A. Dinsby 9/4/02
REGIONAL CONSTRUCTION ENGINEER DATE

RECOMMENDED BY 9/04/02
REGIONAL TRANSPORTATION MAINTENANCE ENGINEER DATE

RECOMMENDED BY 9-4-02
REGIONAL TRAFFIC ENGINEER DATE

APPROVED BY 09-04-02
REGIONAL DIRECTOR DATE

Bruce Fraelich 4/2/04
Amy Cook 04/7/04
Bruce Fraelich 4/20/2004
P Kellum 4/4/12

DESIGN SUPERVISOR Chris Clemens & JOB MANAGER Mike DeLisa — DESIGNED BY Steve Lahey — CHECKED BY Chris Sabo — DRAFTED BY Blair Isley — ESTIMATED BY Chris Sabo — CHECKED BY Chris Sabo

FED ROAD REG. NO.	STATE	CONTRACT NO.	SHEET NO.	TOTAL SHEETS
1	N.Y.	D259214	249	432

BRIDGE REHABILITATION PROJECT (ELEMENT SPECIFIC)
VARIOUS BRIDGES ON INTERSTATE 481
TOWNS OF DEWITT AND CICERO
ONONDAGA COUNTY
P.I.N. 305613 B.I.N. 1072571 & 1072572

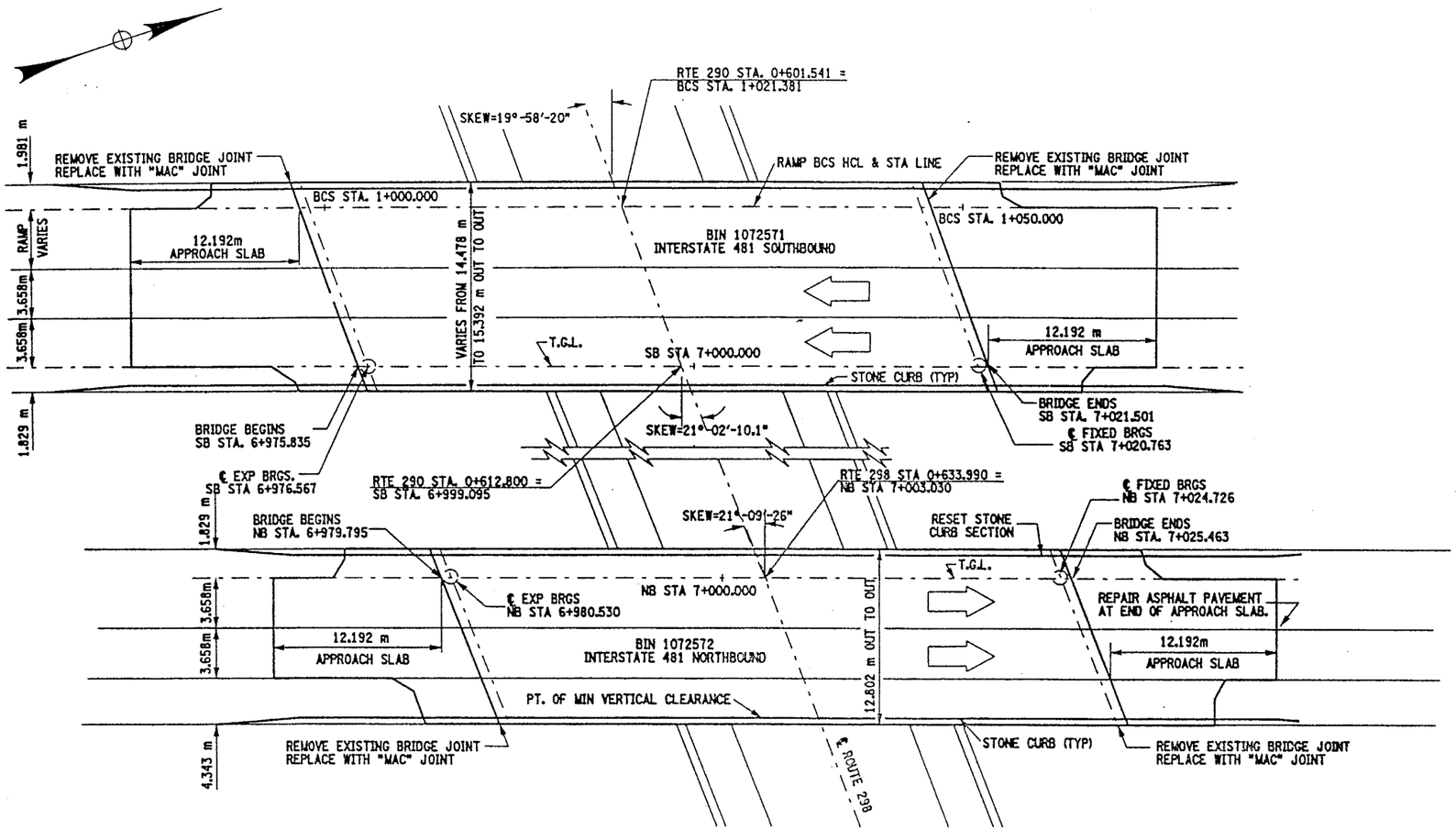

PLAN
SCALE: 1:200

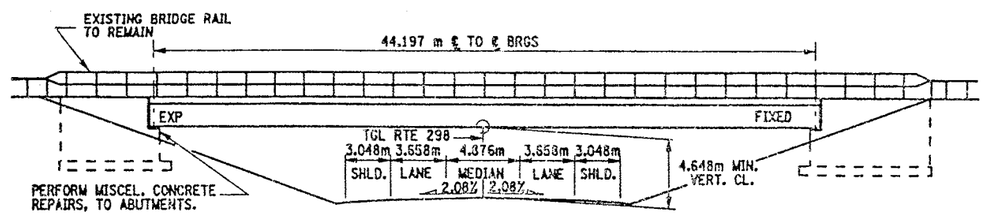

ELEVATION
SCALE: 1:200

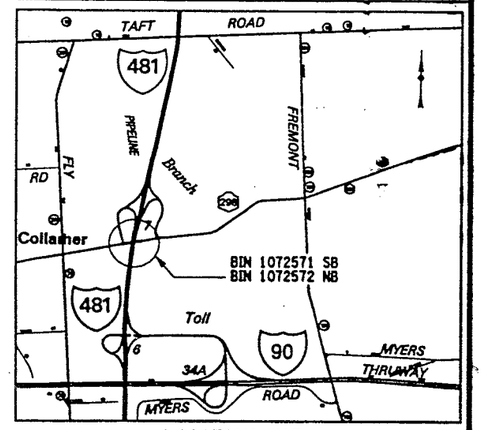

LOCATION MAP
QUADRANGLE
SCALE: 1:24000

WORK TO BE DONE ON BIN 1072571: (NOT NECESSARILY IN THIS ORDER)

1. ESTABLISH MP&T FOR STAGE CONSTRUCTION.
2. REMOVE EXISTING BRIDGE JOINTS.
3. PLACE NEW MODIFIED ARMOR COMPRESSION JOINTS, ("MAC" JOINTS).
4. PERFORM MISCELLANEOUS REPAIRS TO CONCRETE ELEMENTS AT ABUTMENTS.

WORK TO BE DONE ON BIN 1072572: (NOT NECESSARILY IN THIS ORDER)

1. ESTABLISH MP&T FOR STAGE CONSTRUCTION.
2. REMOVE EXISTING BRIDGE JOINTS.
3. PLACE NEW MODIFIED ARMOR COMPRESSION JOINTS, ("MAC" JOINTS).
4. REPAIR SECTION OF CURB ON THE BRIDGE.
5. REPAIR ASPHALT APPROACHES, AT END OF APPROACH SLAB.
6. PERFORM MISCELLANEOUS REPAIRS TO CONCRETE ELEMENTS AT ABUTMENTS.

NOTE:
"MAC" JOINT - MODIFIED ARMORED JOINT SYSTEM WITH COMPRESSION SEAL.

BIN 1072571 SOUTHBOUND
BIN 1072572 NORTHBOUND
ALL DIMENSIONS ARE IN m UNLESS OTHERWISE NOTED

AS BUILT REVISIONS

SIGNATURE DATE

INTERSTATE 481
OVER
ROUTE 298

PLAN, ELEVATION AND BRIDGE SECTION

STATE OF NEW YORK
DEPARTMENT OF TRANSPORTATION

FILENAME	REGION	DATE	DRAWING NO.
305613AN.G1A	3	10/02	GP8-1

DESIGN SUPERVISOR ____ JOB MANAGER ____ DESIGNED BY ____ ESTIMATED BY ____ DRAFTED BY ____ CHECKED BY ____

FED ROAD REG. NO.	STATE	CONTRACT NO.	SHEET NO.	TOTAL SHEETS
1	N.Y.	D259214	253	432

BRIDGE REHABILITATION PROJECT (ELEMENT SPECIFIC)
VARIOUS BRIDGES ON INTERSTATE 481
TOWNS OF DEWITT AND CICERO
ONONDAGA COUNTY
P.I.N. 305613 B.I.N. 1072572

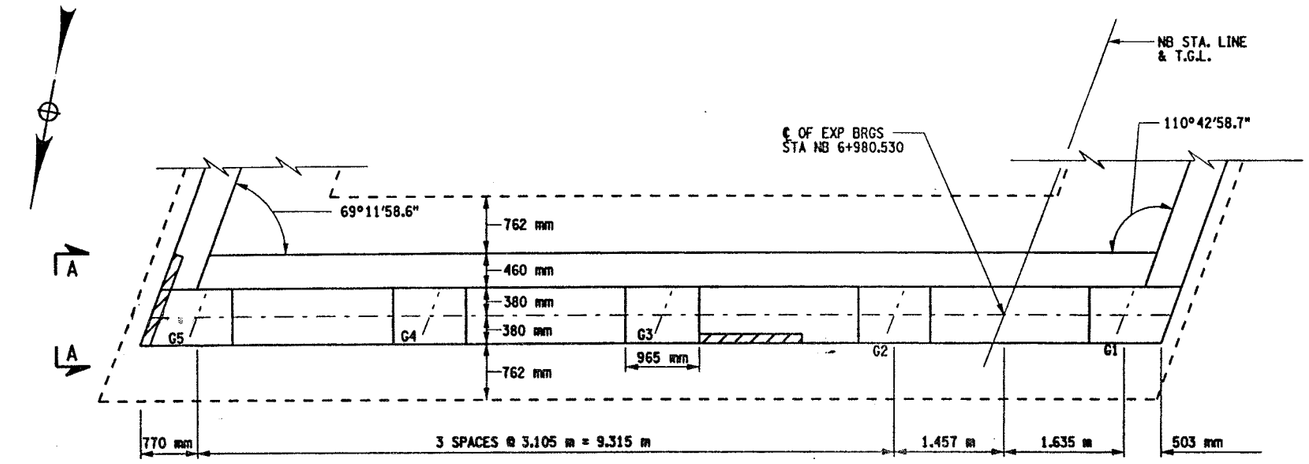

PLAN
SCALE 1:40

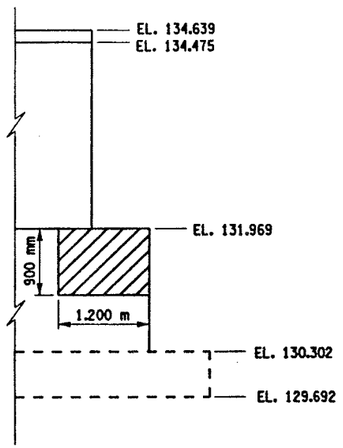

SECTION A-A
SCALE 1:40

NOTES:

1. ALL DIMENSIONS SHOWN FOR CONCRETE REMOVAL ARE APPROXIMATE AND SHALL BE FIELD VERIFIED BY THE CONTRACTOR AND EIC.
2. REMOVE CONCRETE TO LIMITS SHOWN AS WELL AS TO SOUND CONCRETE, A.O.B.E.
3. WHEN REMOVING EXISTING CONCRETE, SAWCUT 5 mm MIN. TO PRODUCE NEAT REMOVAL LINES. ANY COST TO BE INCLUDED IN THE BID PRICE FOR ITEM 582.05M.
4. ALL EXISTING REINFORCEMENT TO REMAIN.
5. ELEVATIONS ARE GIVEN FOR QUANTITY ESTIMATES ONLY.
6. REFER TO CONTRACT D250094 FOR ORIGINAL CONSTRUCTION DETAILS.

AREAS OF PROPOSED WORK: ITEM 582.05M REMOVAL OF STRUCTURAL CONCRETE- REPLACEMENT WITH CLASS A CONCRETE

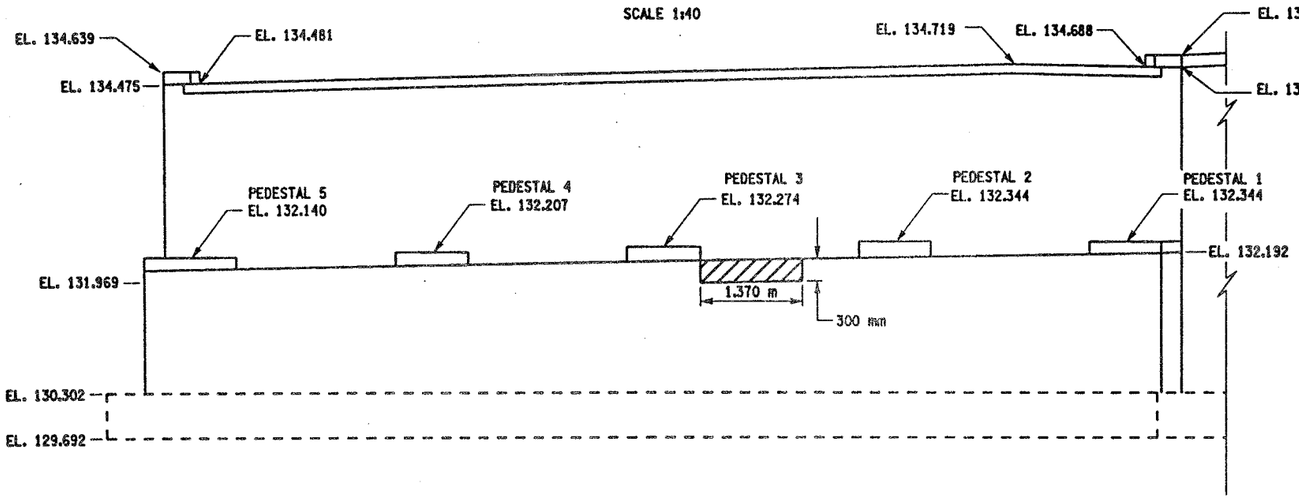

ELEVATION
SCALE 1:40

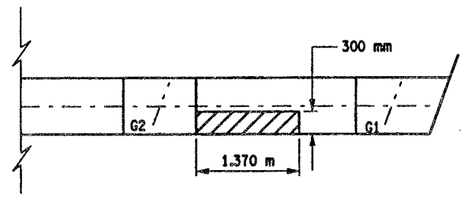

BRIDGE SEAT
SCALE 1:40

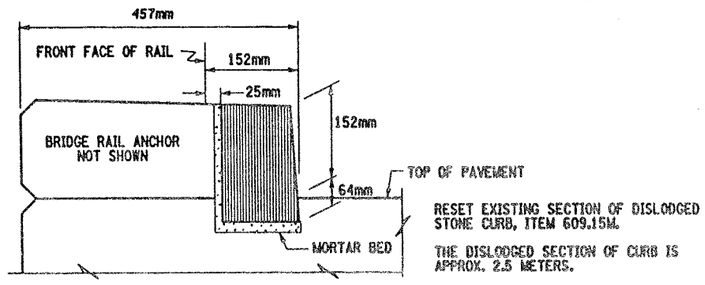

RESET STONE CURB DETAIL
NOT TO SCALE

LIST OF ITEMS USED:

ITEM 582.05M - REMOVAL OF STRUCTURAL CONCRETE - REPLACEMENT WITH CLASS A CONCRETE (CM)
ITEM 609.15M - RESETTING EXISTING CURB (M)

ALL DIMENSIONS ARE IN m UNLESS OTHERWISE NOTED

AS BUILT REVISIONS

SIGNATURE DATE

INTERSTATE 481 NB
OVER
ROUTE 298
SOUTH ABUTMENT
PLAN AND ELEVATION

STATE OF NEW YORK
DEPARTMENT OF TRANSPORTATION

FILENAME	REGION	DATE	DRAWING NO.
305613AN.A1B	3	10/02	AB8-3

DESIGN SUPERVISOR ___ JOB MANAGER ___ DESIGNED BY ___ ESTIMATED BY ___ DRAFTED BY ___ CHECKED BY ___

FED ROAD REG. NO.	STATE	CONTRACT NO.	SHEET NO.	TOTAL SHEETS
1	N.Y.	D259214	362	432

BRIDGE REHABILITATION PROJECT (ELEMENT SPECIFIC)
VARIOUS BRIDGES ON INTERSTATE 481
TOWNS OF DEWITT AND CICERO
ONONDAGA COUNTY
P.I.N. 305613 | B.I.N. ALL BINS

BRIDGE JOINT TABLE

B.I.N. NUMBER	JOINT LOCATION	JOINT SKEW	SPAN(S) LENGTH FOR JOINT (METERS)	JOINT BEND LOCAT'N RT	JOINT BEND LOCAT'N LT	EXISTING JOINT TYPE	PROPOSED JOINT TYPE	CURB TO CURB DISTANCE (METERS) (SEE NOTES)	FASCIA & MEDIAN LENGTH (METERS) LT/RT	TOTAL LENGTH (METERS)	JOINT ITEM NUMBER(S)	DRAWING NUMBER SECT VIEW	DRAWING NUMBER PLAN VIEW	DRAWING NUMBER FASCIA DETAIL
1072530	EAST ABUT.	0°-00'-00"	33.528	N	N	ACJ	MAC-5	15.850	.457/.457	16.764	567.35M	JD-30	JD-29	JD-30
	WEST ABUT.	0°-00'-00"	37.795	N	N	ACJ	MAC-5	15.850	.457/.457	16.764	567.35M	JD-30	JD-29	JD-30
1072571	SOUTH ABUT.	20°-29'-45.2"	44.196	N	N	ACJ	MAC-6	14.481	.488/.488	15.457	567.36M	JD-32	JD-31	JD-32
	NORTH ABUT.	20°-29'-45.2"	———	N	N	ACJ	MAC-1	15.456	.488/.488	16.428	567.31M	JD-32	JD-31	JD-32
1072572	SOUTH ABUT.	21°-09'-2.1"	44.196	N	N	ACJ	MAC-6	12.746	.490/.490	13.726	567.36M	JD-34	JD-33	JD-34
	NORTH ABUT.	21°-09'-2.1"	———	N	N	ACJ	MAC-1	12.746	.490/.490	13.726	567.31M	JD-34	JD-33	JD-34
1072581	SOUTH ABUT.	3°59'-27.5"	37.033	N	N	ACJ	MAC-5	11.917	.458/.458	12.833	567.35M	JD-36	JD-35	JD-36
	NORTH ABUT.	3°-59'-27.5"	———	N	N	ACJ	MAC-1	11.917	.458/.458	12.833	567.31M	JD-36	JD-35	JD-36
1072582	SOUTH ABUT.	3°-51'-57.9"	37.033	N	N	ACJ	MAC-5	11.915	.458/.458	12.831	567.35M	JD-38	JD-37	JD-38
	NORTH ABUT.	3°-51'-57.9"	———	N	N	ACJ	MAC-1	11.915	.458/.458	12.831	567.31M	JD-38	JD-37	JD-38
1072781	EAST ABUT.	16°-26'-24"	———	N	N	ACJ	MAC-1	12.500	.530/.530	13.560	567.31M	JD-40	JD-39	JD-40
	WEST ABUT.	16°-26'-24"	33.635	N	N	ACJ	MAC-5	12.500	.530/.530	13.560	567.35M	JD-40	JD-39	JD-40
1072782	EAST ABUT.	16°-26'-24"	———	N	N	ACJ	MAC-1	13.183	.530/.530	14.243	567.31M	JD-42	JD-41	JD-42
	WEST ABUT.	16°-26'-24"	31.394	N	N	ACJ	MAC-5	12.589	.530/.530	13.649	567.35M	JD-42	JD-41	JD-42
1072791	EAST ABUT.	17°-02'-59.4"	30.785	N	N	ACJ	RCS	12.566	.531/.531	13.628	16567.64M	JD-47	JD-43	JD-47
	WEST ABUT.	17°-02'-59.4"	———	N	N	ACJ	RCS	12.566	.531/.531	13.628	16567.64M	JD-47	JD-43	JD-47
1072792	EAST ABUT.	17°-02'-59.4"	30.785	N	N	ACJ	MAC-5	12.566	.530/.530	14.015	567.35M	JD-44	JD-43	JD-44
	WEST ABUT.	17°-02'-59.4"	———	N	N	ACJ	MAC-1	12.566	.530/.530	14.015	567.31M	JD-44	JD-43	JD-44
1093510	WEST ABUT.	44°-07'-00"	———	N	N	ACJ/ADA	RCS	16.560	.637/.637	17.834	16567.64M	JD-46	JD-45	JD-46
	EAST ABUT.	40°-26'-00"	37.522	N	N	ADA	RADA	15.620	———	15.620	———	JD-46	JD-45	———

LEGEND

EXISTING JOINT TYPE:

ACJ = ARMORED COMPRESSION JOINT SYSTEM
MOD = MODULAR JOINT SYSTEM
MAC = MODIFIED ARMORED COMPRESSION SYSTEM (NO HORIZ. ARMORING ANGLE)
ADA = ARMORED DECK ANGLE
SS = STRIP SEAL JOINT
OPEN = OPEN JOINT

PROPOSED JOINT TYPE:

MAC-1 = MOD. ARM./COMP. SEAL JT. SYS. (A-1)
MAC-2 = MOD. ARM./COMP. SEAL JT. SYS. (A-2)
MAC-5 = MOD. ARM./COMP. SEAL JT. SYS. (A-5)
MAC-6 = MOD. ARM./COMP. SEAL JT. SYS. (A-6)
RCS = REPLACE EXISTING COMPRESSION SEAL
RADA = REMOVE ARMOR DECK ANGLE
MOD-1 = MODULAR JT. SYS. (ONE-CELL)
MOD-2 = MODULAR JT. SYS. (TWO-CELL)

JOINT BEND LOCATION:

N = NO BENDS
CRB = CURB LINE
PAV'T = PAVEMENT

GENERAL NOTES:

- ALL MEASUREMENTS SHALL BE FIELD VERIFIED.
- CURB TO CURB LENGTHS ARE MEASURED ALONG ℄ OF JOINT.
- MULTIPLE DIMENSIONS ARE SHOWN LOOKING UP-STATION, LEFT TO RIGHT.
- ALL DIMENSIONS ARE SHOWN IN METERS.

INFORMATIONAL NOTES:

BIN 1072530 - NO JOINT AT PIER.

BIN 1072791 - REPLACE COMPRESSION SEALS
BEG. ABUT. (EAST), TYPE A-5
END ABUT. (WEST), TYPE A-1

FOR JOINT DETAILS REFER TO THE FOLLOWING DRAWINGS;

DWG. NO. JD-1 - MODIFIED ARMORED COMPRESSION SEAL JOINT SYSTEM.
DWG. NO. JD-24 - ONE-CELL MODULAR JOINT SYSTEM.
DWG. NO. JD-25 - TWO-CELL MODULAR JOINT SYSTEM.

LIST OF BRIDGE JOINT ITEMS USED:

ITEM 566.01M - MODULAR EXP. JOINT SYSTEM ONE-CELL (M)
ITEM 566.02M - MODULAR EXP. JOINT SYSTEM TWO-CELL (M)
ITEM 567.31M - MODIFIED ARMORED JOINT SYSTEM W/ COMP. SEAL TYPE A1 (m)
ITEM 567.32M - MODIFIED ARMORED JOINT SYSTEM W/ COMP. SEAL TYPE A2 (m)
ITEM 567.35M - MODIFIED ARMORED JOINT SYSTEM W/ COMP. SEAL TYPE A5 (m)
ITEM 567.36M - MODIFIED ARMORED JOINT SYSTEM W/ COMP. SEAL TYPE A6 (m)
ITEM 16567.6400001M - REPLACE COMPRESSION SEAL FOR EXISTING BRIDGE JOINTS (m)

ALL DIMENSIONS ARE IN m UNLESS OTHERWISE NOTED

AS BUILT REVISIONS

SIGNATURE ——— DATE ———

INTERSTATE 481 VARIOUS BRIDGES

BRIDGE JOINT TABLE

STATE OF NEW YORK
DEPARTMENT OF TRANSPORTATION

FILENAME	REGION	DATE	DRAWING NO.
305613AJJA1	3	10/02	JT-2

DESIGN SUPERVISOR ——— JOB MANAGER ——— DESIGNED BY ——— DRAFTED BY ——— CHECKED BY ——— ESTIMATED BY ———

FED ROAD REG. NO.	STATE	CONTRACT NO.	SHEET NO.	TOTAL SHEETS
1	N.Y.	D259214	397	432

BRIDGE REHABILITATION PROJECT (ELEMENT SPECIFIC)
VARIOUS BRIDGES ON INTERSTATE 481
TOWNS OF DEWITT AND CICERO
ONONDAGA COUNTY
P.I.N. 305613 B.I.N. 1072572

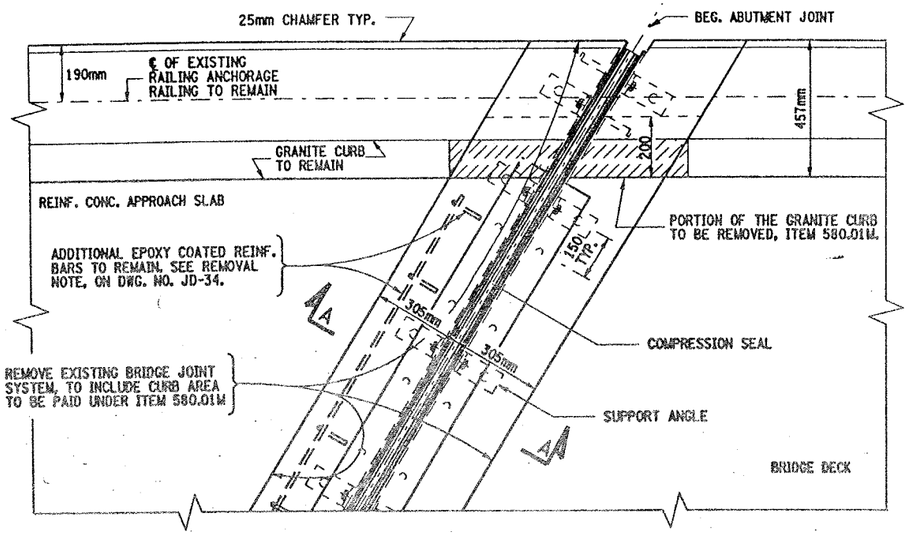

EXISTING ABUTMENT JOINT PLAN VIEW

BIN 1072572 - BEG. ABUT. SHOWN
END ABUT. SIMILAR

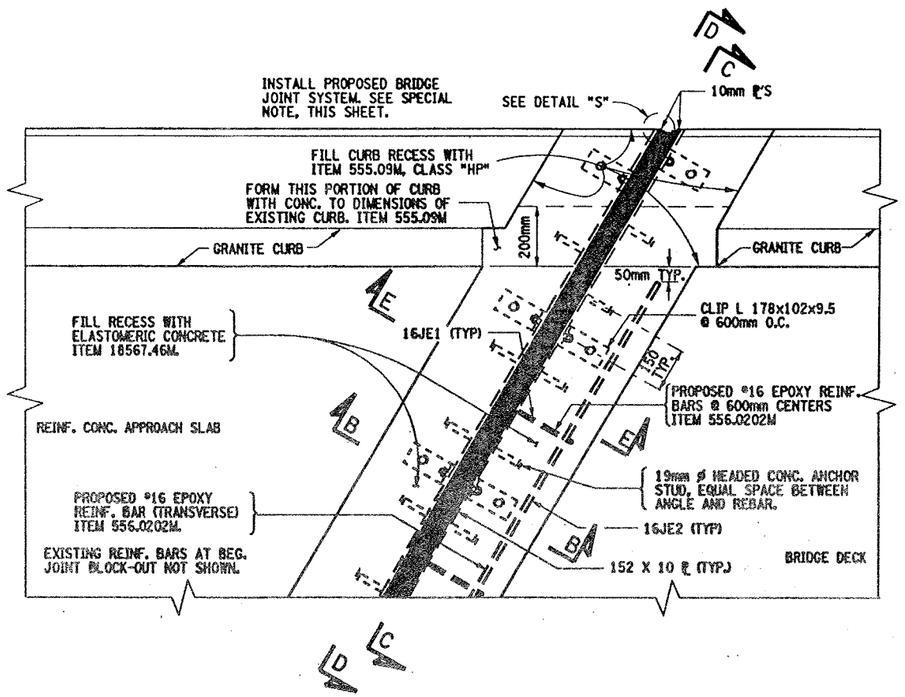

PROPOSED ABUTMENT JOINT PLAN VIEW

BIN 1072572 - BEG. ABUT. SHOWN
END ABUT. SIMILAR

NOTES:

1. REFER TO DWG. NO. JD-1 FOR PROPOSED JOINT DETAILS AND ALL NOTES SHALL APPLY.
2. FOR SECTION VIEWS SEE DWG. NO. JD-34.
3. REFER TO DWG. NO. JT-2 FOR PROPOSED BRIDGE JOINT INSTALLATION LOCATIONS.
4. THE SECTION OF THE GRANITE CURB SHALL BE SAWCUT TO PRODUCE NEAT REMOVAL LINES. COST BE TO INCLUDED IN PRICE BID FOR 580.01M.
5. BIN 1072572 NB STRUCTURE HAS A 21°-09'-2.1" SKEW ANGLE.
6. BRIDGE JOINT REPAIRS/REPLACEMENT SHALL BE CONDUCTED UTILIZING NIGHT-TIME CONSTRUCTION TECHNIQUES FOR BOTH OF THESE STRUCTURES. WHEN EVER THE JOINT BLOCK-OUT CONCRETE IS REMOVED OR CURING, STEEL ROAD PLATES SHALL BE USED. REFER TO DWG. NO. AA-RP1 FOR ROAD PLATE DETAILS.

SPECIAL NOTE:

BIN 1072572 - INSTALL ITEM 567.36M AT SOUTH ABUT. JOINT
INSTALL ITEM 567.31M AT NORTH ABUT. JOINT.

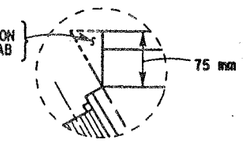

DETAIL "S"
NOT TO SCALE

WORK TO BE DONE:

BIN 1072572 - REPLACE BEGINNING AND END BRIDGE ABUTMENT JOINTS.

ITEMS USED:

ITEM 555.09M	- STRUCT. CONCRETE, CLASS "HP" (CM)
ITEM 556.0202M	- EPOXY-COATED BAR REINF. FOR STRUCT. (Kg)
ITEM 567.31M	- MOD. ARM. JOINT SYSTEM W/COMP. SEAL TYPE A-1 (M)
ITEM 567.36M	- MOD. ARM. JOINT SYSTEM W/COMP. SEAL TYPE A-6 (M)
ITEM 18567.46M	- ELASTOMERIC CONCRETE FOR BRIDGE JOINT SYSTEMS (M)
ITEM 580.01M	- REMOVAL OF STRUCT. CONCRETE (CM)

ALL DIMENSIONS ARE IN mm UNLESS OTHERWISE NOTED

AS BUILT REVISIONS

SIGNATURE DATE

INTERSTATE 481 NB
OVER
ROUTE 298

BRIDGE JOINT DETAILS

STATE OF NEW YORK
DEPARTMENT OF TRANSPORTATION

FILENAME	REGION	DATE	DRAWING NO.
305613AJJA1	3	10/02	JD-33

DESIGN SUPERVISOR ____ JOB MANAGER ____ DESIGNED BY ____ ESTIMATED BY ____ DRAFTED BY ____ CHECKED BY ____ CHECKED BY

FED ROAD REG. NO.	STATE	CONTRACT NO.	SHEET NO.	TOTAL SHEETS
1	N.Y.	D259214	398	432

BRIDGE REHABILITATION PROJECT (ELEMENT SPECIFIC)

VARIOUS BRIDGES ON INTERSTATE 481

TOWNS OF DEWITT AND CICERO

ONONDAGA COUNTY

P.I.N. 305613 | B.I.N. 1072572

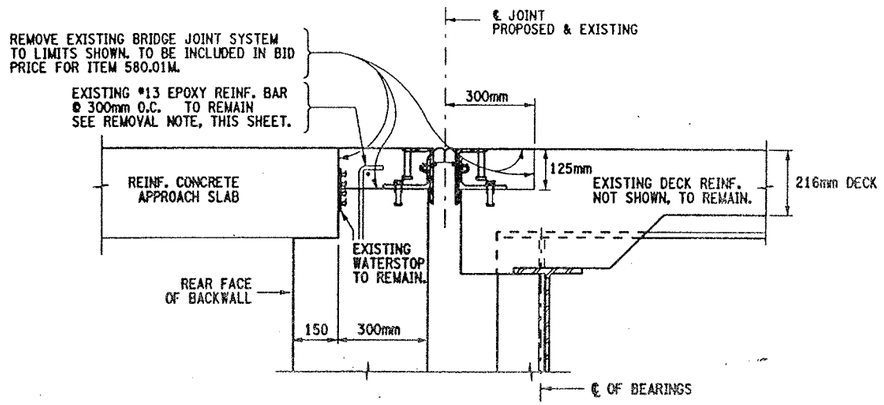

SECTION A-A
EXISTING ABUTMENT JOINT

NOT TO SCALE

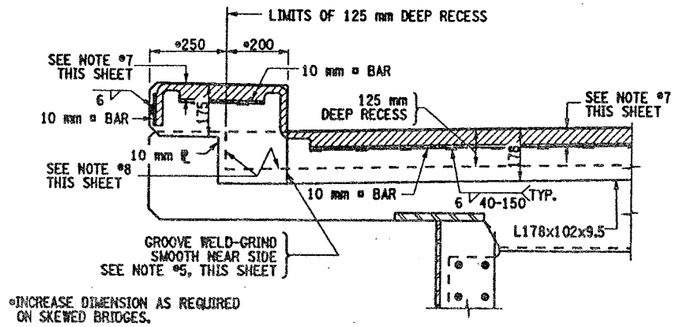

PROPOSED ABUTMENT JOINT
SECTION C-C (BRUSH CURB)

NOT TO SCALE

REMOVAL NOTE:

EXISTING EPOXY COATED REINF. BARS ENCOUNTERED AT THE JOINT BLOCK-OUTS, SHALL REMAIN. CARE SHALL BE TAKEN DURING REMOVAL OPERATIONS, NOT TO DAMAGE THE REINFORCEMENT BARS.

PRIOR TO PLACEMENT OF NEW CONCRETE THE EXISTING EPOXY BARS SHALL BE CLEANED AND ANY FIELD REPAIRS DEEMED NECESSARY BY THE ENGINEER, BE MADE AS PER SECTION 556-3.02(C) OF STANDARD SPECIFICATIONS. TO BE INCLUDED IN PRICE BID FOR ITEM 580.01M.

NOTES:

1. ACTUAL BRIDGE JOINT BLOCK-OUT DIMENSIONS MAY VARY. REMOVAL LIMITS SHALL BE TO EXISTING BLOCK-OUT LOCATIONS, AOBE.
2. EXISTING WATERSTOPS SHALL REMAIN.
3. FOR CALCULATION OF "A" DIMENSION REFER TO DWG. NO. JD-1.
4. REFER TO DWG. NO. JD-33 FOR PROPOSED PARTIAL PLAN VIEWS.
5. ALL WELDS SHALL BE GROUND SMOOTH TO THE SATISFACTION OF THE ENGINEER, ON SEAL CONTACT SIDE OF EDGE BEAM.
6. REFER TO DWG. NO. JD-1 FOR PROPOSED JOINT DETAILS AND ALL NOTES SHALL APPLY.
7. THIS DEPTH SHALL BE INDICATED ON THE SHOP DRAWINGS AND SHALL BE SUCH THAT WHEN THE SEAL IS COMPRESSED TO 50% OF ITS NOMINAL WIDTH, THE TOP OF THE SEAL SHALL BE NOT LESS THAN 6 mm NOR MORE THAN 19 mm BELOW THE TOP OF ROADWAY.
8. RECESSES RECEIVING ITEM 555.09M, AFTER SURFACE PREPARATION, THOROUGHLY WET THE CONCRETE SURFACES AND ALL POROUS SURFACES TO BE IN CONTACT WITH NEW CONCRETE FOR 12 HOURS. NOTE, THE USE OF MATERIAL SPECIF. 705-22 PORTLAND CEMENT MORTAR BONDING GROUT HAS BEEN ELIMINATED, (PROJECT PROPOSAL).

ITEMS USED:

ITEM 555.09M - STRUCT. CONCRETE, CLASS "HP" (CM)
ITEM 556.0202M - EPOXY-COATED BAR REINF. FOR STRUCT. (KG)
ITEM 18567.46M - ELASTOMERIC CONCRETE FOR BRIDGE JOINT SYSTEMS (M)
ITEM 580.01M - REMOVAL OF STRUCT. CONCRETE (CM)

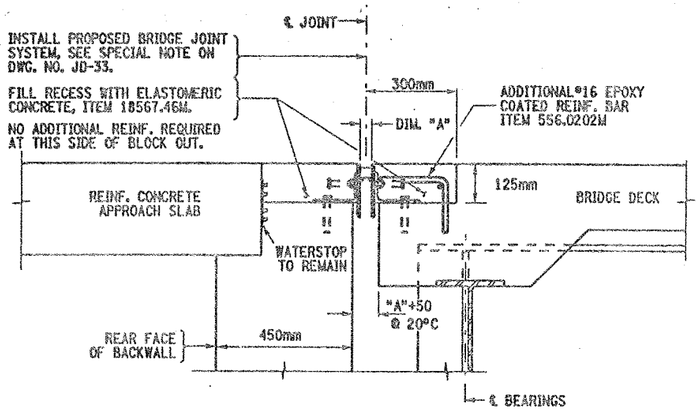

SECTION B-B
PROPOSED ABUTMENT JOINT

NOT TO SCALE

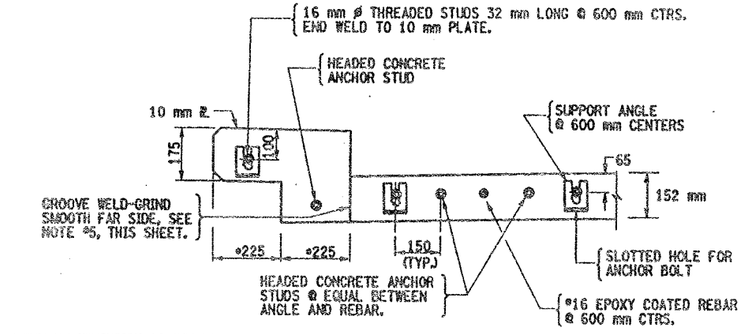

PROPOSED ABUTMENT JOINT
SECTION D-D (BRUSH CURB)

(ONLY THE STEEL SHOWN)

NOT TO SCALE

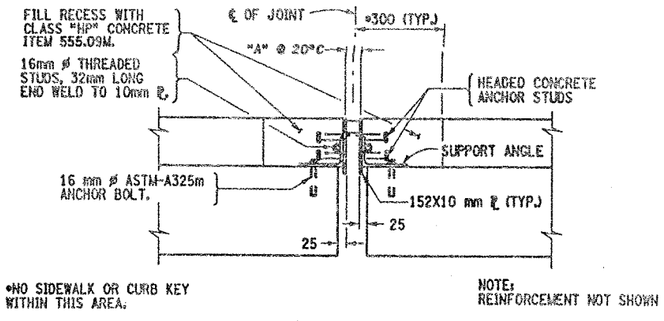

PROPOSED ABUTMENT JOINT
SECTION E-E

ALL DIMENSIONS ARE IN mm UNLESS OTHERWISE NOTED

AS BUILT REVISIONS

SIGNATURE DATE

INTERSTATE 481 NB
OVER
ROUTE 298

BRIDGE JOINT DETAILS

STATE OF NEW YORK
DEPARTMENT OF TRANSPORTATION

FILENAME	REGION	DATE	DRAWING NO.
305613AJ_JA1	3	10/02	JD-34

DESIGN SUPERVISOR ____ JOB MANAGER ____ DESIGNED BY ____ CHECKED BY ____ DRAFTED BY ____ ESTIMATED BY ____

BIN: 1072572
I481 NB / Route 298

DECK DETERIORATION PLAN

NOT TO SCALE

N

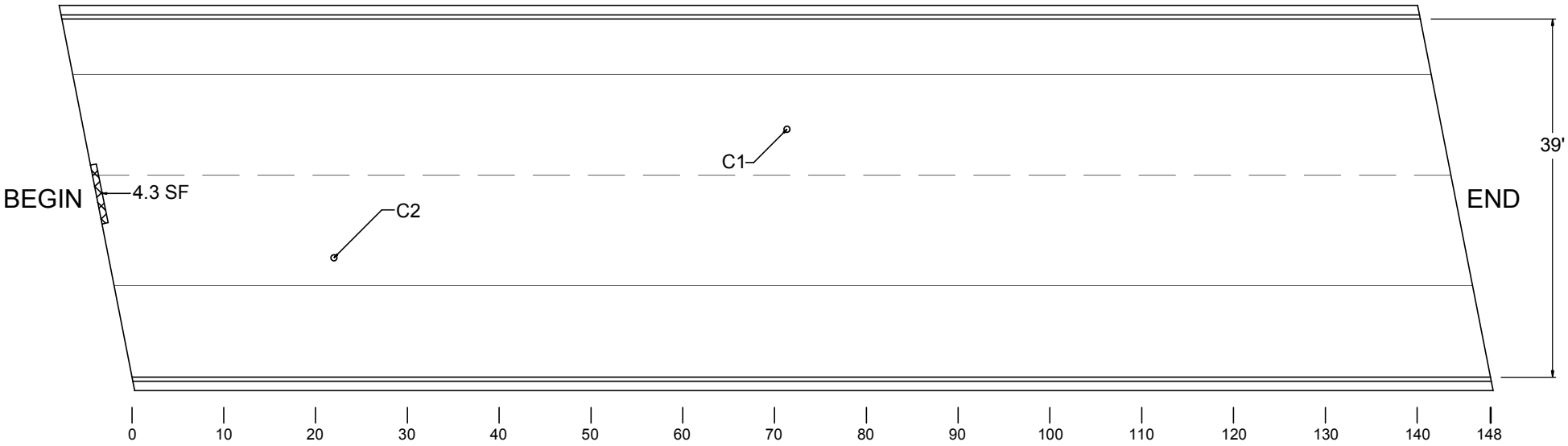

TOTAL DAMAGED AREA EQUALS 4.3 SF WHICH IS 0.1 % OF DECK SURFACE

LEGEND

- Hollow Concrete
- Patch
- Coring location
- Crack

IN-DEPTH PHOTO DOCUMENTATION

BIN: 1072572
I481 NB / Route 298

IN-DEPTH INSPECTION
PHOTO LOCATION PLAN

N



LEGEND	
(XX)	Photo Above Deck
[XX]	Photo Below Deck

In-Depth Inspection Photos

I-481 NB over Rt. 298, BIN 1072572



DESCRIPTION: BEGIN JOINT IN RIGHT LANE (R-L)

PHOTO 1



DESCRIPTION: BEGIN PEDESTAL 2 LEFT

PHOTO 2

In-Depth Inspection Photos

I-481 NB over Rt. 298, BIN 1072572



DESCRIPTION: END BACKWALL IN BAYS 3 & 4

PHOTO 3



DESCRIPTION: BEGIN PEDESTAL 1 LEFT

PHOTO 4



DESCRIPTION: END PEDESTAL 5 LEFT

PHOTO 5



DESCRIPTION: END STEM & SEAT BAY 4

PHOTO 6



DESCRIPTION: BEGIN BACKWALL BAY 1

PHOTO 7



DESCRIPTION: BEGIN BACKWALL BAY 2

PHOTO 8



DESCRIPTION: BEGIN BACKWALL AT RIGHT

PHOTO 9



DESCRIPTION: BEGIN STEM UNDER BAY 1

PHOTO 10



DESCRIPTION: BEGIN STEM UNDER BAY 3

PHOTO 11



DESCRIPTION: BEGIN STEM AT PEDESTAL 3

PHOTO 12

In-Depth Inspection Photos

I-481 NB over Rt. 298, BIN 1072572



DESCRIPTION: END STEM UNDER BAY 1

PHOTO 13



DESCRIPTION: END ABUTMENT

PHOTO 14



DESCRIPTION: END LEFT SAFETY WALK (TYP.)

PHOTO 15



DESCRIPTION: RIGHT FASCIA (E-B)

PHOTO 16



DESCRIPTION: RIGHT SNOW FENCE POST 6 OF 7

PHOTO 17



DESCRIPTION: TOP OF DECK FROM BEGIN

PHOTO 18



DESCRIPTION: BEGIN PATCH RIGHT LANE (R-L)

PHOTO 19



DESCRIPTION: LEFT OVERHANG (E-B)

PHOTO 20

In-Depth Inspection Photos

I-481 NB over Rt. 298, BIN 1072572



DESCRIPTION: BAY 3 AT MIDSPAN (E-B)

PHOTO 21



DESCRIPTION: BAYS 2 & 3 AT END

PHOTO 22

In-Depth Inspection Photos

I-481 NB over Rt. 298, BIN 1072572



DESCRIPTION: GIRDER 1 (B-E)

PHOTO 23



DESCRIPTION: BEGIN BEARING 5

PHOTO 24

ASBESTOS SAMPLING SURVEY

Asbestos Sampling Survey

Location:

BIN 1072572
Interstate Route I-481 North Bound
over Route 298

Prepared for:

New York State
Department of Transportation

PIN 3056.13.111

LaBella Project No. 201001

August 2001

Table of Contents

Page

I. Project Summary 1

II. Site Description 1

III. Inspection Procedures 1

IV. Results 2

Certification 2

Figures and Table

I. Project Summary

In accordance with conditions of Term Agreement D012606, LaBella Associates, P.C. conducted an asbestos sampling survey of the Interstate Route I-481 north bound bridge over Route 298. Based on laboratory analyses of bulk samples collected, no asbestos-containing materials were identified.

II. Site Description

The Site is located in Onondaga County, New York. For the purpose of this report, the Site consists of the Interstate Route I-481 north bound bridge over Route 298. (See attached FIGURE 1 - Site Location Map).

III. Inspection Procedures

The following procedures were used to obtain the data for this Report:

A. A review of record drawings supplied by Region 3 personnel and a visual inspection of the subject structure were conducted to identify potential visible/accessible sources of asbestos-containing materials. Observations and notes were made to provide a description of the structure, and an estimate of the approximate amount, length, or area of ACM present.

B. Physical or operational constraints, which might affect the removal of the ACM, were identified and reported.

C. Bulk samples of suspected ACM were collected during the site inspection of the subject structure. Samples were taken from each homogeneous area that may contain ACM.

D. Samples were submitted for analysis. Preliminary PLM analyses of NOB materials were performed by LaBella Laboratories, a NYSDOH approved laboratory, to determine the presence and percentage of asbestos in each sample. TEM analyses of NOB materials, if necessary, were performed by AMA Analytical, Inc.

E. Lab results were used to determine the approximate location, type, and amount of the verified ACM.

F. A drawing of the structure at the Site was created, in order to show sample locations and the approximate locations and amounts of confirmed ACM observed in accessible locations.

Only accessible areas were inspected. Inaccessible areas, such as areas within the bridge or the approaches to the bridge were not included in this inspection. No investigation was conducted by LaBella Associates to determine the presence of underground utilities on or in the immediate vicinity of the Site. Actual sample locations are shown in the attached FIGURE 2. Results of bulk sample analyses are tabulated in the attached TABLE.

IV. Results

BIN 1072572 Interstate Route I-481 North Bound over Route 298

Based on laboratory analyses of bulk samples collected, no asbestos-containing materials were identified.

Certification

LaBella Associates, P.C. certifies the accuracy of this report, to the best of our knowledge, based on the information collected as described in the Inspection Procedures Section of this investigation.

Figures & Table

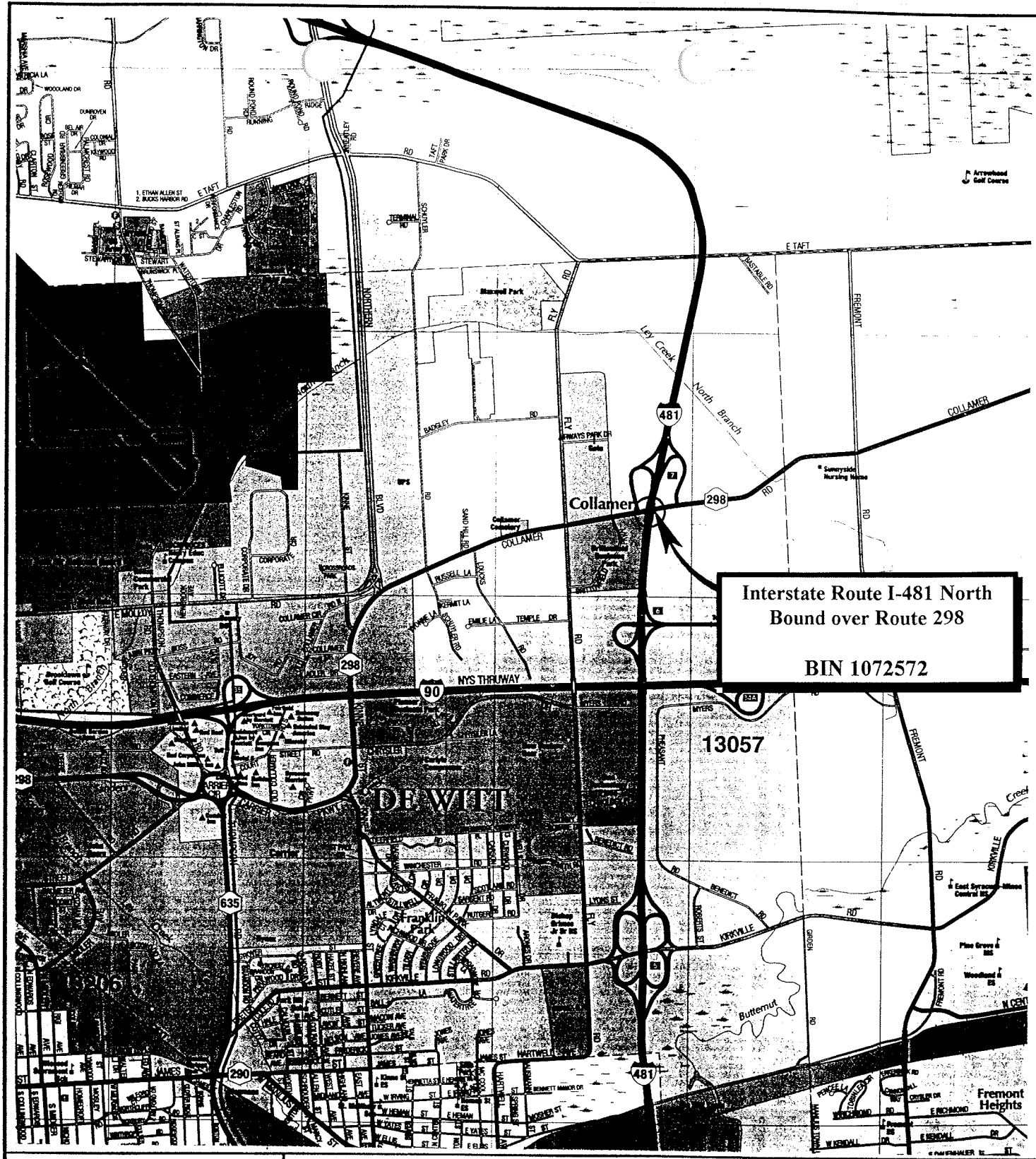

FIGURE 1
Site Location Map

Interstate Route I-481 North Bound over Route 298 Onondaga County, New York

LABELLA

PROJECT NO. 201001

Bulk Sample Results Table

Asbestos Sampling Survey
BIN 1072572
Interstate Route I-481 North Bound
over Route 298
Onondaga County, New York
LaBella Project # 201001
PIN 3056.13.111

Sample #	Sample Location	Type of Material	Results % Asbestos	Amount of Material	Specification Item No.
1072572-1	North End of Bridge Beneath Bearing	Bearing Pad	None Detected	N/A	N/a
1072572-2	North End of Bridge on Back Wall	Gray Masonry Coating	None Detected	N/A	N/a

LATEST BIENNIAL INSPECTION REPORT

Inspection Date: 4/4/2012 RC: 33 BIN: 1072572

Bridge Ratings

Carried: 481I 481I33012096 Crossed: 298 298 33012055 CheckValue: 1,779,271,479

Inspection Agency: 10 - NYSDOT Type of Inspection: 1 - BIENNIAL
GTMS: A02 -- Unpainted Steel - Stringer/Multi-Beam or Girder
POSTINGS: See Gen Rec Page 1 for Postings at time of inspection.
Further Investigation Needed: No
State Highway Number: 70-7 Milepoint: 13.39 AADT/Yr: 13959 / 2002
Orientation: 1 - North Political Unit: 0233 - Town of DEWITT Year Built: 1985
Total Spans: 1 Ramp Bridge Attached To Span: NA BIN: NA
General Recommendation: 6 Computed Condition Rating: 5.609

Abutment Ratings:	**Beg Abut**	**End Abut**
Joint with Deck	6	6
Bearings, Bolts, Pads	4	6
Seats and Pedestals	6	6
Backwall	5	5
Stem (Breastwall)	6	6
Erosion or Scour	5	6
Footings	9	9
Piles	8	8
Recommendation	5	5

Wingwall Ratings:	**Beg Abut**	**End Abut**
Walls	5	5
Footings	9	9
Erosion or Scour	6	6
Piles	8	8

Channel Ratings:	**Channel**
Stream Alignment	8
Erosion and Scour	8
Waterway Opening	8
Bank Protection	8

Approach Ratings:	**Approaches**
Drainage	5
Embankment	6
Settlement	6
Erosion	5
Pavement	4
Guide Railing	6

Number of Flags Issued:

RED: 0 Yellow: 0 Safety: 0

Vulnerability Reviews Recommended: 1=Yes, 2=No, 3=NA, X=NotActive

Hydraulic: 3	Overload: X	Steel: 2
Collision: 2	Concrete: X	Seismic: X

Inspector's Signature: CheckValue: 1,779,271,479 Date: 4/4/2012

Peter Riehlman,PE () (Inspector ID:3000052)

Signed copy of this inspection report is available in the appropriate NYSDOT Regional Office

Reviewed By: Date: 5/14/2012

James R. Manning,PE () (QC ID:3000023)

Signed copy of this inspection report is available in the appropriate NYSDOT Regional Office

Inspection Date: 4/4/2012 RC: 33 BIN: 1072572

Span Ratings

Carried: 481I 481I33012096 Crossed: 298 298 33012055 CheckValue: 1,779,271,479

Deck Element Ratings:	**001**
Wearing Surface	6
Curbs	5
Sidewalks, Fascias	5
Railings, Parapets	6
Scuppers	8
Gratings	8
Median	8
Mono Deck Surface	6

Superstructure Ratings:	**001**
Structural Deck	6
Primary Members	6
Secondary Members	6
Paint	5
Joints	8
Recommendation	6

Pier Ratings:	**001**
Bearings, Bolts, Pads	8
Pedestals	8
Top of Cap or Beam	8
Stem Solid Pier	8
Cap Beam	8
Pier Columns	8
Footings	8
Erosion or Scour	8
Piles	8
Recommendation	8

Utility Ratings:	**001**
Lighting	8
Sign Structure	8
Utilities and Support	6

Field Notes:

Field Date	Arrival	Departure	Temp (C)	Temp (F)	Weather Conditions
4/4/2012	8:00:00 AM	10:00:00 AM		50	ptly cldy

Inspection Date: 4/4/2012 RC: 33 BIN: 1072572

Inspection Notes

Carried: 481I 481I33012096 Crossed: 298 298 33012055 CheckValue: 1,779,271,479

Note ID: 331210725720000

Beg Abut -- Abutment: Bearings, Bolts, Pads -- Rated 4, Was 5
Referenced Photos: "3"
2012-Beg. bearing,being expansion bearing under G5 has some delaminations all around and has some pack rust under the rocker affecting the functioning of each.

Note ID: 331210725720001

Approaches: Pavement -- Rated 4, Was 4
Referenced Photos: "1", "6", "7", "8"
2012- Beg approach asphalt cracked first 2' with a pothole at beg. right corner, 2.5' long, 8" wide,3" to 4" deep.
The end approach the concrete is spalling at the header 2"-3" wide. for width of bridge, 1" to 2" deep.End is similar

Note ID: 331210725720002

Span 001 -- Deck Elements: Curbs -- Rated 5, Was 4
Referenced Photos: "5"
2012- Curb repaired since last inspection.

Inspection Date: 4/4/2012 RC: 33 BIN: 1072572

Inspection Photos in Photo Number Order

Carried: 481I 481I33012096 Crossed: 298 298 33012055 CheckValue: 1,779,271,479

Beg Rt appr pavt

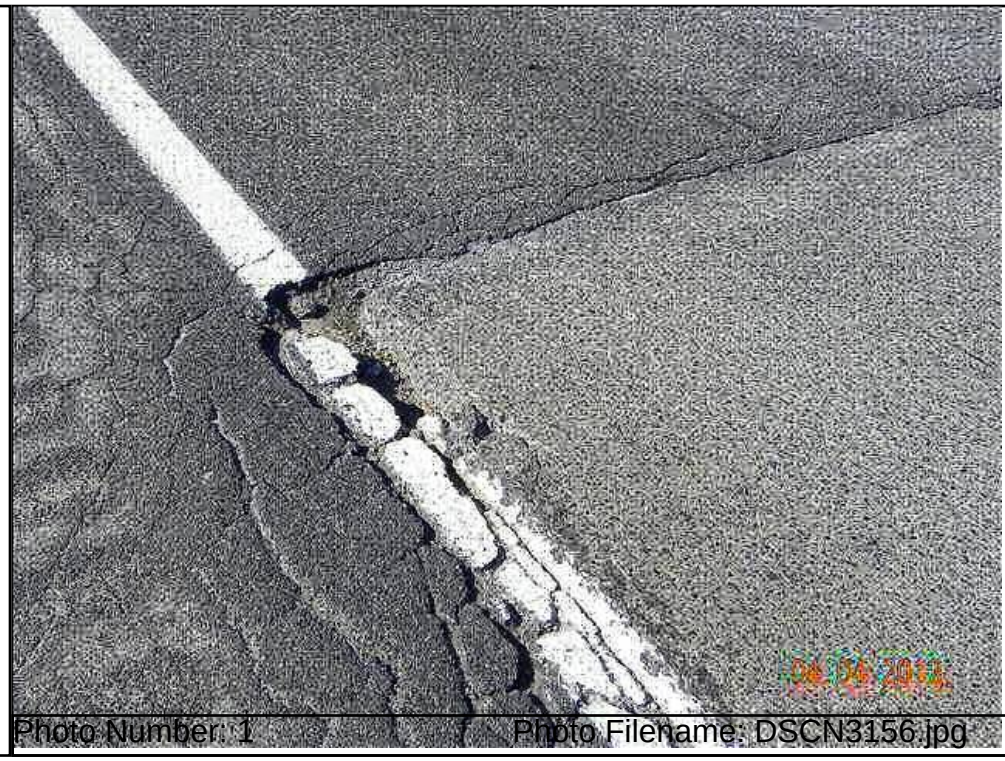

Photo Number: 1 Photo Filename: DSCN3156.jpg

End Brg #5



Photo Number: 2 Photo Filename: DSCN3151.jpg

Inspection Date: 4/4/2012 RC: 33 BIN: 1072572

Inspection Photos in Photo Number Order

Carried: 481I 481I33012096 Crossed: 298 298 33012055 CheckValue: 1,779,271,479

Beg Brg #5



Photo Number: 3 Photo Filename: DSCN3158.jpg

Lt curb looking toward End



Photo Number: 5 Photo Filename: DSCN3159.jpg

Inspection Date: 4/4/2012 RC: 33 BIN: 1072572

Inspection Photos in Photo Number Order

Carried: 481I 481I33012096 Crossed: 298 298 33012055 CheckValue: 1,779,271,479

Location:
Beg appr looking Lt



Photo Number: 6 Photo Filename: DSCN3155.jpg

Location:
End Rt appr pavt



Photo Number: 7 Photo Filename: DSCN3152.jpg

Inspection Date: 4/4/2012 RC: 33 BIN: 1072572

Inspection Photos in Photo Number Order

Carried: 481I 481I33012096 Crossed: 298 298 33012055 CheckValue: 1,779,271,479

Location:
End appr looking Rt



Photo Number: 8 Photo Filename: DSCN3147.jpg

No Photo

Inspection Date: 4/4/2012 RC: 33 BIN: 1072572

Inspection Sketches in Sketch SysID Order

Carried: 481I 481I33012096 Crossed: 298 298 33012055 CheckValue: 1,779,271,479

Sketch ID: 331210725720000 Sketch Filename: LdRatNCL.12

Beg Abut -- Abutment: Piles -- Rated 8, Was 8
Referenced Photos:

Region 3 LoadRatingFieldCheckForm

NYSDOT BRIDGE INSPECTION REPORT			
SHEET	1	OF	1

LOAD RATING FIELD CHECK FORM

BIN:	1034410		Insp. Date:	04/30/2010

Dead Load - Note Changes since Last load Rating or state "NONE":

NONE

Section Loss -Note Changes since Last load Rating or state "NONE":

NONE

Additional Notes:

NONE

Attachments:

Team Leader: Peter Riehlman

Inspection Date: 4/4/2012 RC: 33 BIN: 1072572

Gen. Rec., Postings, Federal Ratings, etc.

Carried: 481I 481I33012096 Crossed: 298 298 33012055 CheckValue: 1,779,271,479

Overall Condition:

GENERAL RECOMMENDATION: 6

Computed Condition Rating: 5.609

Problems Requiring Action:

NO Further Investigation Needed

NO Flags Issued

POSTINGS:

Inspector Confirmed existing Posting data as correct.
Posted Vertical Clearance ON the bridge is: No Posting
Posted Vertical Clearance UNDER the bridge is: No Posting
No Load Restriction is posted on this bridge

Overloads Observed:

NO Overload Vehicles were observed on this bridge

FEDERAL RATINGS:

NBI Deck Condition: 8
NBI Superstruct Condition: 8
NBI Substruct Condition: 7
NBI Channel Condition: N
NBI Culvert Condition: N

Diving Inspection Needs:

Diving Inspection Required? No Date of Last Diving Inspection: No Date

Inventory Problems:

Inventory Problems Exist? No

Miscellaneous:

Time Required to Inspect Bridge: 2 Hours

Lane Closure Needs: None Required

No Railroad Flagging Required

No Pedestrian Fence

There is a Snow Fence present

The BIN Plate is in OK condition

Inspection Date: 4/4/2012 RC: 33 BIN: 1072572

Gen. Rec., Postings, Federal Ratings, etc.

Carried: 481I 481I33012096 Crossed: 298 298 33012055 CheckValue: 1,779,271,479

Special Emphasis Inspection Required:

Non-Redundant/Fracture Critical Members - No
Pin and Hangers - No
Fatigue-Prone Welds - No
Non-Categorized Fatigue-Prone Details - No
Other (Specified in Text) - No

Special Emphasis Details:

No Special Emphasis Inspection Required.

General Notes To the Next Inspector:

Improvements Observed:

Inspection Date: 4/4/2012 RC: 33 BIN: 1072572

Review Progress and Personnel Present at Inspection

Carried: 481I 481I33012096 Crossed: 298 298 33012055 CheckValue: 1,779,271,479

Inspection Submission Status:

Submitted to QC Engineer on: 4/25/2012
QC Submission Number: 353201

QC Review Completed: 5/14/2012
QC Engineer: James R. Manning

Submitted to Liaison Engineer on: 5/24/2012
Liaison Submission Number: 53204

Liaison Review Completed: 6/12/2012
Liaison Engineer: TODD M. HERMANN

Submitted for BIIS Processing on: 6/12/2012
BIIS Submission Number: .kp1

Current Status: Keypunched, Sent to BIIS
Check Value: 1,779,271,479

Personnel Present During Inspection:

Peter Riehlman - Team Leader
Rebecca Maurer - Assistant Team Leader

Inspection Date: 4/4/2012 RC: 33 BIN: 1072572

Inspection Access Requirements

Carried: 481I 481I33012096 Crossed: 298 298 33012055 CheckValue: 1,779,271,479

Equipment Required for Inspection

Access Requirement Changes WERE Noted During This Inspection.
This Listing is from the Inspection.

ACCESS CATEGORIES FOR ENTIRE BRIDGE
Required: Walking

ACCESS CATEGORIES FOR SPAN 1
Required: Walking

Inspection Date: 4/4/2012 RC: 33 BIN: 1072572

Culvert Measurements

Carried: 481I 481I33012096 Crossed: 298 298 33012055 CheckValue: 1,779,271,479

Culvert Measurements

NO CULVERT DATA FOR BIN 1072572

Standard Photos **RC: 33 BIN: 1072572**

Carried: 481I 481I33012096 Crossed: 298 298 33012055

1072572_LOCATION_MAP.JPG



Standard Photos **RC: 33 BIN: 1072572**

Carried: 481I 481I33012096 Crossed: 298 298 33012055

1072572_QUAD_MAP.JPG

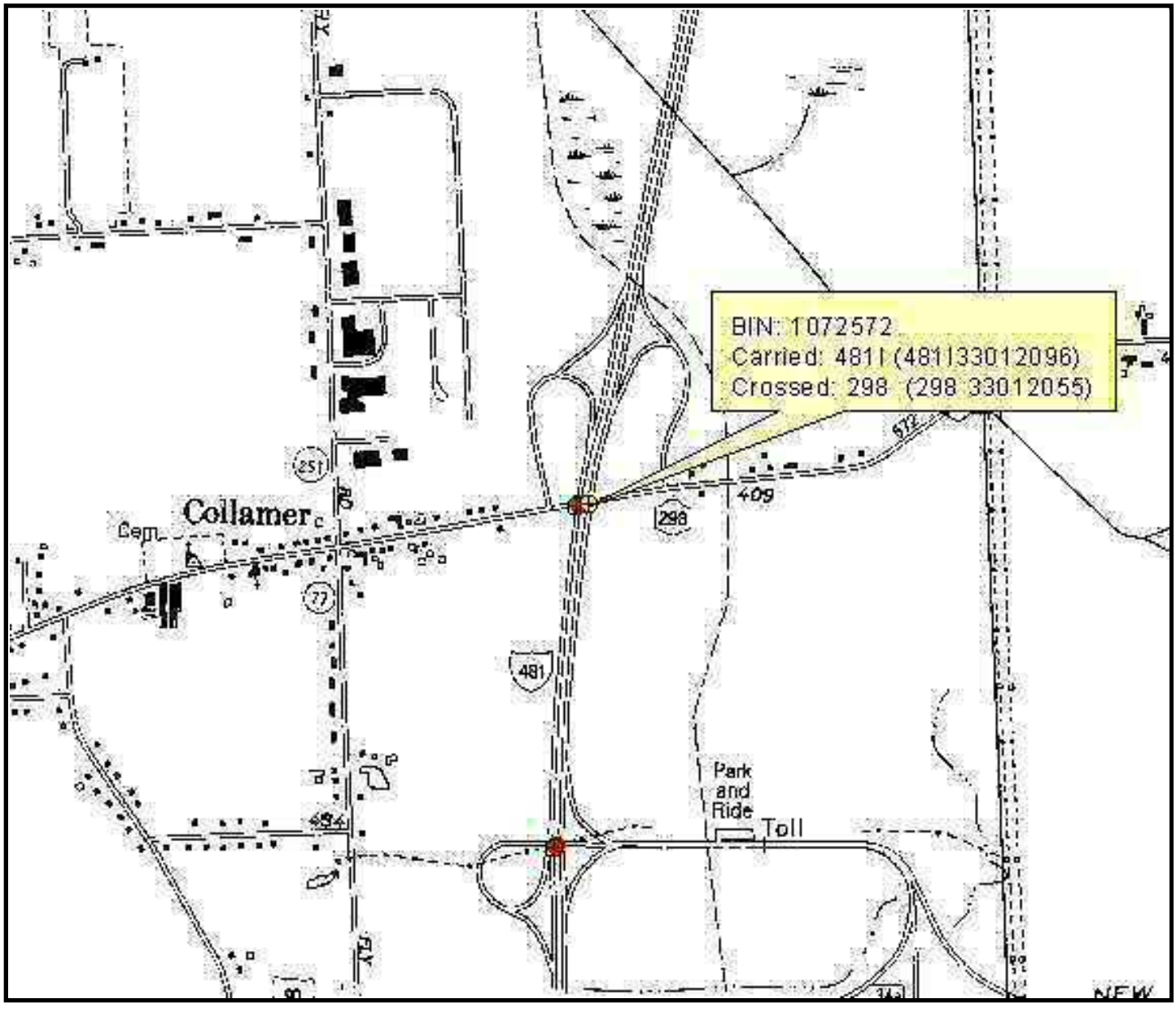

Standard Photos **RC: 33 BIN: 1072572**

Carried: 481I 481I33012096 Crossed: 298 298 33012055

AbutmentBegin.12.jpg



Standard Photos **RC: 33 BIN: 1072572**

Carried: 481I 481I33012096 Crossed: 298 298 33012055

ApproachBegin.12.jpg



Standard Photos **RC: 33 BIN: 1072572**

Carried: 481l 481l33012096 Crossed: 298 298 33012055

ApproachEnd.12.jpg



Standard Photos RC: 33 BIN: 1072572

Carried: 481I 481I33012096 Crossed: 298 298 33012055

ElevationSpan1.12.jpg



Standard Photos RC: 33 BIN: 1072572

Carried: 481I 481I33012096 Crossed: 298 298 33012055

F2CrossedSpan1Left.12.jpg



Standard Photos RC: 33 BIN: 1072572

Carried: 481I 481I33012096 Crossed: 298 298 33012055

F2CrossedSpan1Right.12.jpg



Standard Photos **RC: 33 BIN: 1072572**

Carried: 481I 481I33012096 Crossed: 298 298 33012055

FramingSpan1.12.jpg



LEVEL 1 LOAD RATING SUMMARY SHEET

Region/County Region 3/Onondaga BIN 1072572
Feature(s) Carried and Crossed I-481 Northbound/Rte. 298
Date of field inspection upon which Level 1 rating is based 2/18/2014

OVERALL BRIDGE RATINGS (BASED ON LOWEST RATED ELEMENTS):

Total number of rating units 1

	H inventory	H operating	HS inventory	HS operating
Rating	H 32.19 (tons)	H 53.75 (tons)	HS 57.93 (tons)	HS 96.75 (tons)
Lowest rated element	Interior Girders G2, G3, and G4	Interior Girders G2, G3, and G4	Interior Girders G2, G3, and G4	Interior Girders G2, G3, and G4

Analysis method LFR Comments

Individual Rating Unit Level 1 values:

Rating unit span(s) 1

Main member ratings

	H inventory	H operating	HS inventory	HS operating
Rating	H (tons)	H (tons)	HS (tons)	HS (tons)
Lowest rated element				

Analysis method Comments

Floorbeam ratings

	H inventory	H operating	HS inventory	HS operating
Rating	H (tons)	H (tons)	HS (tons)	HS (tons)
Lowest rated element				

Analysis method Comments

Stringer ratings

	H inventory	H operating	HS inventory	HS operating
Rating	H 32.19 (tons)	H 53.75 (tons)	HS 57.93 (tons)	HS 96.75 (tons)
Lowest rated element	Interior Girders G2, G3, and G4	Interior Girders G2, G3, and G4	Interior Girders G2, G3, and G4	Interior Girders G2, G3, and G4

Analysis method LFR Comments

Certified by Date

Quality Control Engineer Signature Date
Agency or Company represented by certifier

Note:
-If connection ratings govern, record them under stringer ratings for stringer – floorbeam connection, floorbeam ratings for floorbeam-main member connections, etc.
-When Level 1 results indicated the need for load posting or other corrective action, the NYSDOT Regional Structures Engineer shall be notified immediately.
-Load ratings should be filed in the regional office within 60 days of completion of calculations.
-Bridges shall be flagged based on Level I results in accordance with the current NYSDOT flagging procedure.
-Bridge load posting, closure, etc. determinations shall be made as results are being produced.

PARSONS

100 Broadway
New York, NY 10005
Phone: 212-266-8300
Fax: 212-571-6825
www.parsons.com

TECHNICAL MEMORANDUM

FROM: Kian Siang Chau, P.E
NYSPE 082744

DATE: MARCH 19, 2014

RE: SEISMIC SCREENING SUMMARY
NEW YORK STATE DEPARTMENT OF TRANSPORTATION
D031085; PIN 3501.60; I-81

BIN: 1072572 (I-481 NB/ RT 298)

This memorandum summarizes the seismic screening conducted for BIN 1072572 as part of the Interstate 81 Project in Syracuse, NY. The purpose of the screening is to determine if seismic retrofits are warranted at the superstructure to substructure connection, and if further seismic evaluation of the structure is required. This memorandum will give the screening results, retrofits required and recommendations for further seismic evaluation of the structure.

SCREENING PROCEDURE

The seismic screening was performed in accordance with the FHWA Seismic Retrofitting Manual for Highway Structures: Part 1 - Bridges, January 2006. As per the referenced manual, seismic screenings were performed for both lower level and upper level earthquake ground motion. The lower level earthquake ground motion has a reasonable likelihood of occurrence within the life of the bridge (50% probability of exceedance within a 75 year bridge life). The upper level earthquake ground motion has a finite likelihood of occurrence within the life of the bridge (7% probability of exceedance within a 75 year bridge life).

Values for the spectral acceleration for the Syracuse area used in the screening are as follows:

- Lower Level Earthquake Ground Motion for a Short Period (0.2 seconds): $S_S = 0.0251$
- Lower Level Earthquake Ground Motion for a Long Period (1.0 seconds): $S_1 = 0.0076$
- Upper Level Earthquake Ground Motion for a Short Period (0.2 seconds): $S_S = 0.139$
- Upper Level Earthquake Ground Motion for a Long Period (1.0 seconds): $S_1 = 0.047$

These values are considered constant and are the same for all seismic screenings of bridges in the Syracuse area.

The Site Class is based on the soil conditions at the bridge location. It was determined that this parameter has little effect on the results of the seismic screening because the spectral acceleration values for the Syracuse area are small. Based on this, a site class of D was used for all seismic screenings of bridges in the Syracuse area.

Bridge parameters used in the seismic screening were retrieved from the record drawings and WinBolts data.

The seismic screening takes into account the anticipated service life, importance, and the seismic exposure of the bridge to determine a seismic retrofit category (SRC). The SRC is then used to determine seismic evaluation methods and retrofit measures. There are four SRCs, A through D. Seismic retrofit category A is the lowest category; bridges in this category do not require retrofits or further seismic evaluation. Seismic retrofit category D is the highest category; bridges in this category requiring the most rigorous seismic evaluations and retrofits.

SCREENING RESULTS

The SRC for the bridge is "**C**" for lower level earthquake ground motion and "**B**" for upper level earthquake ground motion.

RETROFITS REQUIRED

No seismic retrofits are required for the bridge superstructure to substructure connection.

RECOMMENDATIONS FOR FURTHER SEISMIC EVALUATION

No further seismic evaluation is required for lower level earthquake ground motion. For the upper level earthquake ground motion, it is recommended that the capacities of the bearings are checked as per Section 5.2 of the referenced manual.

Retrofit cost estimates will be provided after any further required seismic evaluations are completed.

BRIDGE DECK EVALUATION REPORT

RECOMMENDATIONS

The bridge deck inspection findings and evaluation are used as a tool for developing the scope of work and cost estimates for the development and comparison of alternatives for the overall project.

The total damaged area of the deck is 0.1% of the total deck surface area. The cores indicate the reinforcement steel is 3.5 inches below the surface of the deck. The lab test indicates that chloride ion concentrations at two of the three sample locations are significantly higher than the corrosion threshold for steel.

Due to the age, condition and high chloride ion content of the bridge deck concrete, the bridge deck should be rehabilitated or replaced to meet the current standards and to mitigate excessive future maintenance costs.

ALTERNATIVES

- Rehabilitation Alternative - 3 inches Bonded Concrete Overlay
  - Scope

    The scope of this alternative will include the complete removal of the bridge railings, curb and safety walks, and fascias to the level of the original top of the deck. The joint will be removed. The top 2 inches of the entire deck will be removed and areas of deteriorated concrete must be removed to at least 1 inch below the level of the reinforcement steel and to the horizontal and vertical limit of any detectable hollow areas. Additionally, any further areas of deteriorated concrete detected will require full depth removal. Any corrosion of the reinforcement steel will be removed by sandblasting or hydro-blasting. The proposed deck overlay will be a 3 inches thick bonded concrete overlay yielding a nominal 9.5 inches standard thickness deck. A new single-sloped concrete barrier and a new armorless joint will be installed. The Level 1 Load Rating for the final condition was found to be acceptable.

- Useful Life Expectancy

  The removal of the top 2 inches of the existing deck will remove a portion of the deck with high chloride ion concentrations. It can be anticipated that chloride ions will continue to migrate into the remaining deck to the reinforcing steel resulting in further corrosion-related deterioration of the deck surface. Concrete admixtures will be included in the bonded concrete overlay to impede the continued penetration of chloride into the deck from the surface. This alternative will result in an extended useful life expectancy estimated at 20 years.

The design life of the project is 30 years (ETC + 30). This alternative does not meet the project objectives of obtaining 30 years of service life and is not evaluated further.

- Rehabilitation Alternative – 100% Deep Removal and Partial Deck Reconstruction
  - Scope

    The scope of this alternative will include the complete removal of the bridge railings, curb and safety walks, and fascias to the level of the original top of the deck. The joint will be removed. The scope of this alternative will include partial depth reconstruction with removal of the concrete to at least 1 inch below the top mat of the reinforcement steel. Additionally, any further areas of deteriorated concrete detected will require full depth removal. Any corrosion of the reinforcement steel will be removed by sandblasting or hydro-blasting. Due to the condition of the deck, full depth removal is not likely and not included in the cost estimate. The proposed deck partial reconstruction will be a nominal 5.75 inches thick concrete deck yielding a 9.5 inches standard thickness deck. A new single-sloped concrete barrier and a new armorless joint will be installed. The Level 1 Load Rating for the final condition was found to be acceptable.
  - Useful Life Expectancy

    This alternative will provide a useful life expectancy is estimated at 35 years.
  - Cost Estimate

    The estimated cost for this alternative is $483,000. The Engineer's Opinion of Probable Construction Cost worksheet is at the end of this section.

- Replacement Alternative – Cast-In-Place Concrete
  - Scope

    This scope of this alternative will include the complete demolition of the existing bridge deck, bridge railings, curb and safety walks, fascias and bridge joint. The bridge deck will be replaced with a new 9.5 inches standard thickness concrete deck. A new single-sloped concrete barrier and a new armorless joint will be installed. The Level 1 Load Rating for the final condition was found to be acceptable.
  - Useful Life Expectancy

    This alternative will provide a useful life expectancy is estimated at 40+ years.
  - Cost Estimate

    The estimated cost for this alternative is $667,000. The Engineer's Opinion of Probable Construction Cost worksheet is at the end of this section.

- Replacement Alternative – Pre-cast Concrete Deck Panels
  - Scope

    The scope of this alternative is similar to the Cast-In-Place Concrete Deck Replacement Alternative except the deck structure will be precast panels. This alternative offers reduced construction time over conventional construction.
  - Useful Life Expectancy

    This alternative will provide a useful life expectancy is estimated at 40+ years.
  - Cost Estimate

    The comparison of accelerated construction to conventional construction is beyond the current scope of this evaluation.

IN-DEPTH INSPECTION REPORT

D031085 P.I.N. 3501.60

ELEMENT SPECIFIC BRIDGE WORK

B.I.N. 1072581

TEAM LEADER Andrew P. Thompson 84914
NYSPE LICENSE #

ASSISTANT TEAM LEADER Mike Savino

FEATURE CARRIED I-481 Southbound

FEATURE CROSSED Taft Road

DATE FIELD WORK BEGAN 12/12/13

DATE FIELD WORK COMPLETED 2/12/14

TABLE OF CONTENTS

- STRUCTURE IDENTIFICATION
- INTRODUCTION
- PROJECT LOCATION MAP
- IN-DEPTH CONDITION DOCUMENTATION
- PLANS & SKETCHES
- IN-DEPTH PHOTO DOCUMENTATION
- ASBESTOS SAMPLING SURVEY
- LATEST BIENNIAL INSPECTION REPORT

STRUCTURE IDENTIFICATION

a. Bridge Identification Number (BIN): 1072581
b. Reference Marker: 481I 3301 2107
c. Region: NYSDOT Region 3
d. County: Onondaga
e. Town: Dewitt
f. Feature Carried: I-481 Southbound
g. Feature Crossed: Taft Rd. (CR 18)

INTRODUCTION

a. Bridge History
   i. Year Built: 1985
   ii. Bridge Type: Single Span, Steel Multi-girder
   iii. Span Length: 122 feet
   iv. Out-to-Out Width: 42 feet
   v. Structural Ratings and Rankings
      1. Federal Sufficiency: 97.4 (September 2012)
      2. Condition Rating: 5.688 (September 2012)
      3. General Recommendation: 6
   vi. Live Load Posting (HS25): No
   vii. National Highway System (NHS): Yes
   viii. Previous work Done: Waterproof bridge deck (1999). Joint replacement and misc. concrete repairs (2004). Curb repairs (2007).
   ix. Planned Future Work: N/A
b. Highway Classification
   i. Functional Classification: Urban Principle Arterial - Interstate
   ii. Traffic Volumes

YEAR	AADT Projected
2014	14753
2034	21922
2054	32575

   iii. Plan for Maintenance and Protection of Traffic:
   Maintenance and Protection of traffic will be achieved by staged construction.

PROJECT LOCATION MAP



IN-DEPTH CONDITION DOCUMENTATION

NYS DEPT. OF TRANSPORTATION BRIDGE **BIN** 1072581 **SHEET:** 1 **OF** 3 **DATE:** 2/12/2014

FEATURE CARRIED: I-481 SB
FEATURE CROSSED: TAFT RD

TEAM LEADER: A.THOMPSON
A. TEAM LEADER: M. SAVINO

ITEM	REMARKS	PHOTO N0.
TP 349-22	Begin Abutment - Joint with Deck: This is the expansion end. Active leakage and rust staining was noted below (Photos 2 and 3). The seal and headers appeared in good condition from above (Photo 1).	1-3
TP 349-23	End Abutment - Joint with Deck: This is the fixed end. The compression seal is slightly torn in the left lane and has lost its bond from the steel armor angles (Photo 4). The headers are in good condition. No active leakage or significant rust staining was noted below (Photo 5).	4,5
TP 349-27	End Abutment - Seats and Pedestals: Pedestal 1 has a 1’ x 8” x 5” deep spall with rebar exposed at the begin left corner (Photo 6). There is an adjacent 1 sf hollow area on its begin face. The seat at the left corner has a 6” diameter x 1.5” deep spall with no rebar exposed. The remainder of the seats and pedestals are in good condition.	6
TP 349-28	Begin Abutment - Backwall: The backwall at the right has a 15" wide x 6” high x 2.5" deep spall at the top (Photo 7). There is also a 20” high x 5” wide x 1” deep spall at the top left (Photo 8). The remainder has vertical hairline cracking and moderate rust staining mostly at the ends (Photo 3).	3,7,8
TP 349-30	Begin Abutment – Stem There is a 3.5 sf hollow area and a 1/8” wide x 2.5’ long horizontal crack in Bay 1 (Photo 9). The crack is 4” from the top and does not sound hollow. There is a 16” wide x 3’ high hollow area under Pedestal 3 at the bottom (Photo 10). There is a 0.5 sf hollow area under Pedestal 5 at the bottom (Photo 11). The remainder of the stem has areas of light cracking with no hollowness (Photo 12).	9-12
TP 349-31	End Abutment – Stem The stem is in good condition with isolated hairline vertical cracking and no hollow areas (Photo 13).	13
TP 350-20	Deck Elements - Curbs: The 2012 Biennial Inspection Report rated the Curb item 4 due to debris built-up along the approach curbs. Approach condition is out of the scope of this project, and bridge curbs are in good condition.	14
TP 350-21	Deck Elements - Sidewalks/Fascias: Sidewalks: Snow covered the curbs and safety walks at the time of the inspection. The snow was cleared at the begin and end and at a few locations along the span. The right safety walk had map cracking where visible, but no hollow sounding areas were found (Photo 14). No map cracking was found where the snow was cleared on the left safety walk.	14

ITEM	REMARKS	PHOTO N0.
TP 350-21	Fascias: Both fascias have map cracking throughout the span (Photo 15). The map cracking is worse under the rail posts. The right fascia has +/-2.5' long x 1/16" wide longitudinal cracking under the rail posts near the bottom (Photo 16). No spalling or hollow sounding areas were found.	15,16
TP 350-22	Deck Elements - Railings/Parapets: The bridge railing and posts are in good condition. Snow fencing is present over the travel lanes on both sides of the bridge. The snow fence consists of 6 steel pipe posts (located at rail posts), steel pipe rails, and chain link fencing. On the left the bottom pipe rails at Posts 2, 4, and 5 are rusted through and detached on the end side (Photo 17). On the right the bottom pipe rail at Post 4 is rusted through and detached on the begin side. The remainder of the bottom connections to snow fence Posts 2-5 on both sides have surface rust and section loss but are intact. The remainder of the snow fencing is in good condition.	17
TP 350-27	Superstructure - Structural Deck: The structural deck is an 8.5" thick concrete mono deck with SIP forms. There are several hollow areas and 3 patches in the top surface of the deck as illustrated in the Deck Deterioration Plan (Photos 4, 18, and 19). Overall, 1.9% of the deck is hollow or patched. The underside has SIP forms and is exposed only at the overhangs (Photo 20). The forms are in good condition. The overhangs have hairline cracking at +/-6' spacing and no hollow sounding areas (Photo 21).	4,18-21
TP 350-28	Superstructure - Primary Members: Girder 1 has (2) impact notches at the left corner of the bottom flange near midspan (Photos 22 and 23). The notches measure 1" and 2" long, are less than ¼" deep, and do not create any significant increase in stress. Otherwise the steel girders are in good condition with no significant section loss.	22,23
TP 350-30	Superstructure - Paint: The girders are made of weathering steel and form a protective coating. Both fascia girders are losing their coating in the form of medium sized sheets on their bottom flange bottom faces for the outside 1/3 width (Photo 25). Right fascia Girder 5 is also affected on the top right face of the bottom flange and lower 3" of the web with coating loss in the form of large sheets (Photo 24). The remainder of the steel on all of the girders has only minor peppering (Photo 20).	20 24,25

NYS DEPT. OF
TRANSPORTATION BRIDGE

BIN 1072581

SHEET: 3 OF 3
DATE: 2/12/2014

FEATURE CARRIED: I-481 SB
FEATURE CROSSED: TAFT RD

TEAM LEADER: A.THOMPSON
A. TEAM LEADER: M. SAVINO

ITEM	REMARKS	PHOTO N0.
	Special Emphasis Inspection Required Non-Redundant/Fracture Critical Members - No Pin and Hangers - No Fatigue-Prone Welds - No Non-Categorized Fatigue-Prone Details - No Other - No	

PLANS & SKETCHES

Open 4/2/98 J. Mann Team Leader 3/20/98

F.U.R. 3,

D250095

FED. RD. REQ. NO.	STATE	FEDERAL AID PROJECT NO.	SHEET NO.	TO SH
	NEW YORK	I-481-2(182)	259	31

INTERSTATE ROUTE 481 EXTENSION
COLLAMER INTERCHANGE TO BEAR ROAD INTERCHANGE - ONONDAGA CO.

CAPITAL PROJECT IDENTIFICATION NO. 3107.00

3/28/94 Douglas

INDEX OF DRAWINGS

DWG. NO.	DESCRIPTION
1	General Plan, Elevation, and Sections
2	General Profiles
3	Estimate of Quantities and Notes
4	Subsurface Profile
5	Embankment Plan and Sections
6	Drainage and Approach Details
7	Drainage and Approach Details
8	Br. 4(SB) So. Abut. Plan and Elevations
9	Br. 4(SB) So. Abut. Reinforcement Plans and Sections
10	Br. 4(SB) No. Abut. Plan and Elevations
11	Br. 4(SB) No. Abut. Reinforcement Plans
12	Br. 5(NB) So. Abut. Plan and Elevations
13	Br. 5(NB) So. Abut. Reinforcement Plans
14	Br. 5(NB) No. Abut. Plan and Elevations
15	Br. 5(NB) No. Abut. Reinforcement Plans
16	Br. 5(NB) Abutment Sections
17	Br. 4(SB) Transverse Section and Structural Slab
18	Br. 5(NB) Transverse Section and Structural Slab
19.	Girder Elevation and Framing Plans
20.	Camber, Haunch, Design Load, and Moment/Shear Tables
21.	Miscellaneous Superstructure Details
22.	Bearing Details
23.	Armored Joint Details
24.	Armored Joint Details
25.	Railing Details
26.	Approach Slab and Railing Layout
27.-30.	Bar Lists

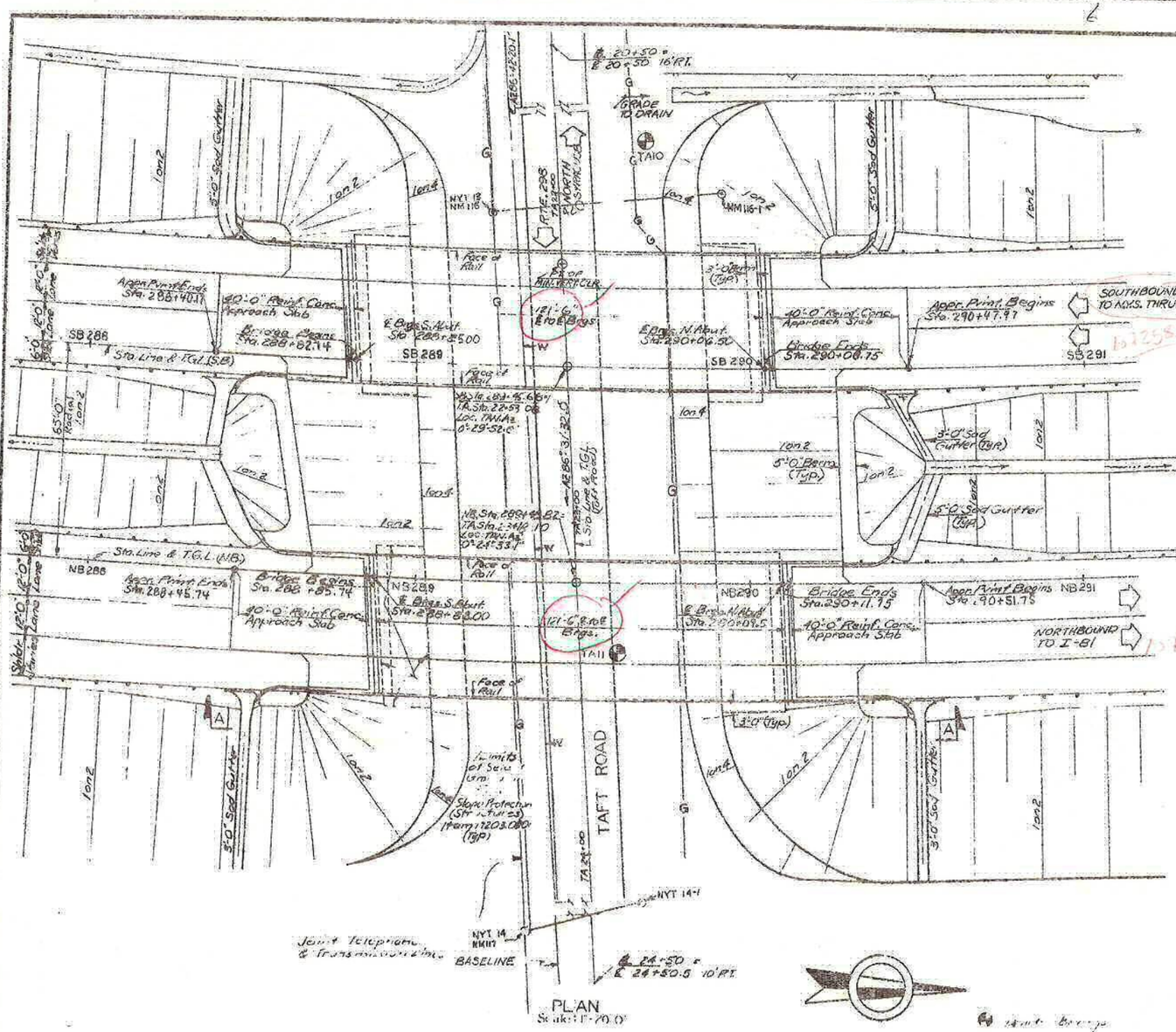

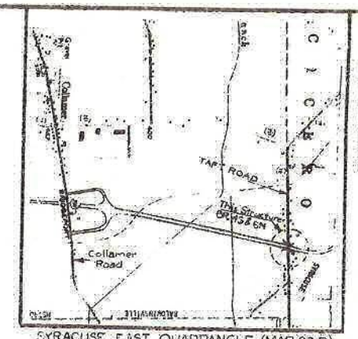

BRIDGE LOCATION MAP
Scale: 1"=2000'

CURVE DATA			
CURVE SB-2		CURVE NB-2	
SC	Sta 285+58.73 SB	SC	Sta 286+25.66 NB
R	2799.79	R	2864.79
L_c	3758.294	L_c	3850.189
D_c	2°-02'-47.2"	D_c	2°-00'-00.6"

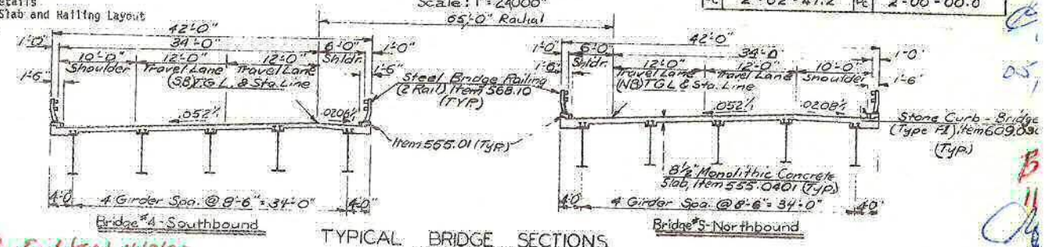

TYPICAL BRIDGE SECTIONS
Scale: 1"=10'-0"

R. Engle (C) 4/9/98

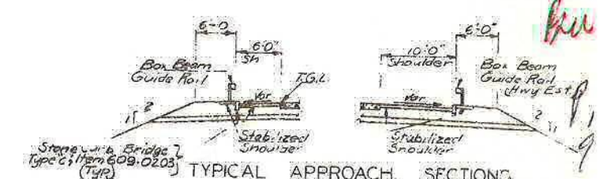

TYPICAL APPROACH SECTIONS
Scale: 1"=10'-0"

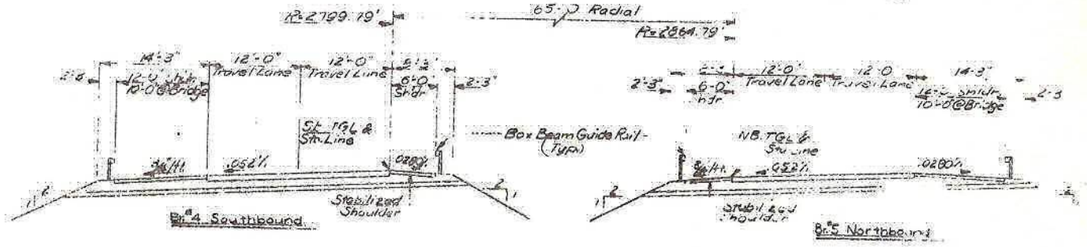

TYPICAL HIGHWAY SECTIONS
Scale: 1"=10'-0"

ELEVATION A-A

NOTE #1: Depths of Gas & Water Lines are approximate. No work is planned for these Utilities.

H.S. LOADING

INVENTORY	OPERATING
HS 20 (36 T) (W3)	HS 42 (75 T) (W5)

"(WS)" = WORKING STRESS

BIN	NUMBERS
Bridge 4 (SB) (2288)	Bridge 5 (NB) (2289)

STATE OF NEW YORK
DEPARTMENT OF TRANSPORTATION
DIVISION OF CONSTRUCTION

INTERSTATE ROUTE 481
BRIDGES NO. 4(SB) & 5(NB)
OVER TAFT ROAD

DATE MADE 10/2/92
PROJECT ENGINEER H. WINKLER
IN CHARGE OF H. R. BROOKS
DESIGNED BY
DESIGN CHECKED BY
DETAILED BY
DIVISION ORDERED BY E.E.

D. J. MASSIMILIAN DATE
PLAN RECOMMENDED BY

107
D25(

FED RD REG NO.	STATE	FEDERAL AID PROJECT NO	SHEET NO
	NEW YORK	I-481-2(152)	275

INTERSTATE RTE. 573 EXTENSION (I-481)
COLLAMER INTERCHANGE TO NORTHERN BLVD.
ONONDAGA COUNTY

CAPITAL PROJECT IDENTIFICATION NO. 3107.06

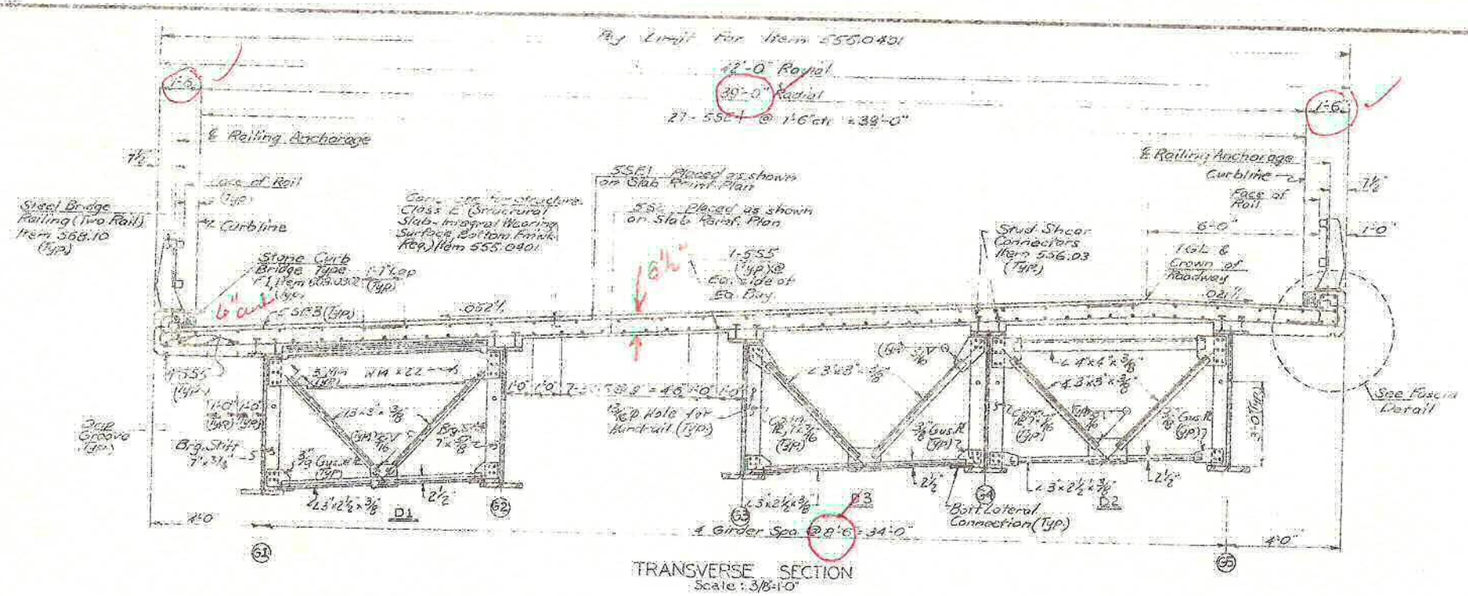

TRANSVERSE SECTION
Scale: 3/8"=1'-0"

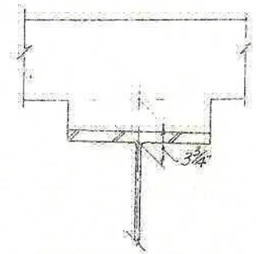

HAUNCH DETAIL
Scale: 1½"=1'-0"

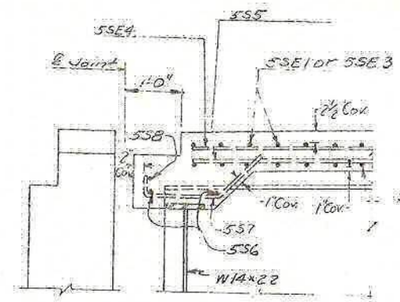

SLAB HAUNCH REINF. DETAIL
Not To Scale



WEST BRUSH CURB OVERLAY
Scale: 1/8"=1'-0" Horiz.
1/4"=1'-0" Vert.

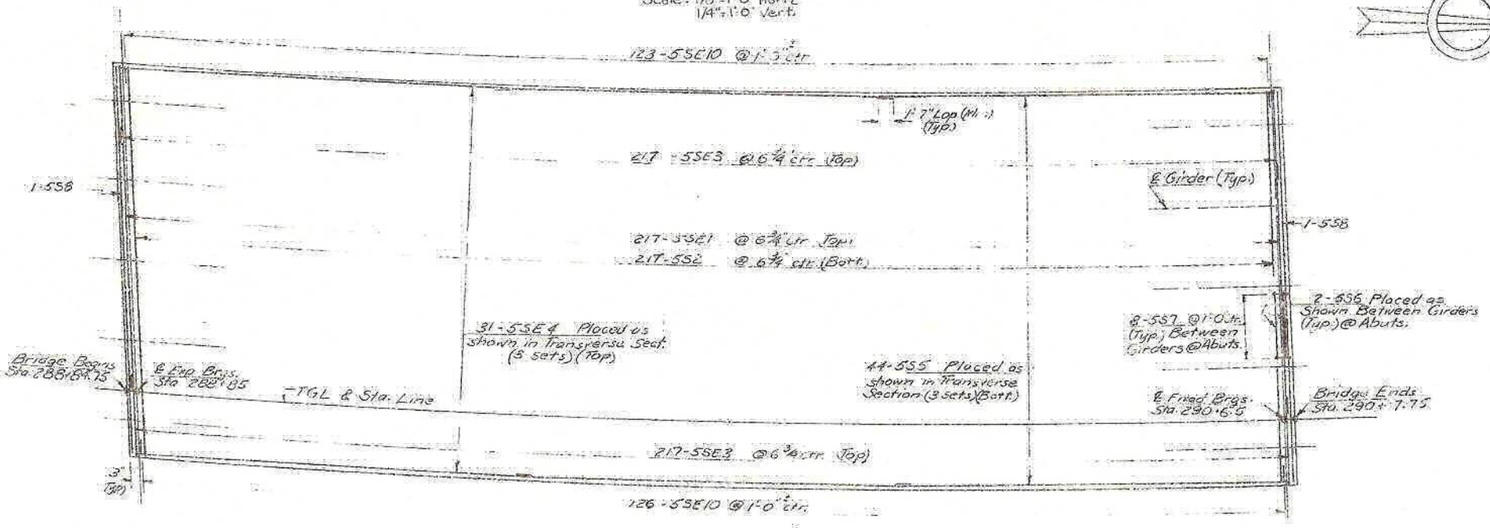

SLAB REINF. PLAN
Scale: 1/8"=1'-0" Horiz.
1/4"=1'-0" Vert.



EAST BRUSH CURB OVERLAY
Scale: 1/8"=1'-0" Horiz.
1/4"=1'-0" Vert.

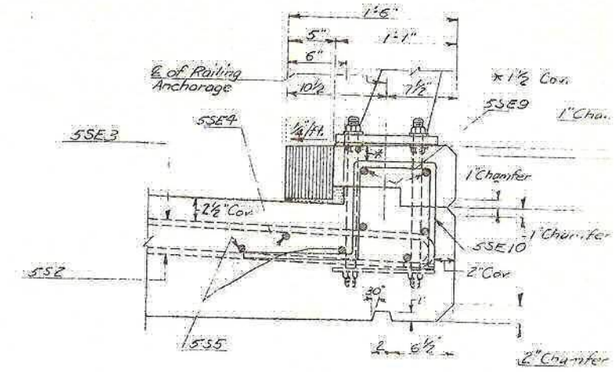

FASCIA DETAIL
Scale: 1½"=1'-0"

555.04

Concrete Table		
Br 4 (SB)	Item 555.01	Item 555.02
Slab	—	5196 SF
East Brush Curb	2.25 CY	—
West Brush Curb	2.23 CY	—

Notes:

1. For Framing Plan and Girder Details, see Dwg 19.
2. For Joint Details, see Dwgs 23 & 24.
3. For Railing Details, see Dwg. 25.
4. For Railing Layout, see Dwg. 26
5. For Details of Stay-In-Place Forms, see Dwg 27.
6. For Safety Handrail Details, see Dwg. 21.
7. For Curb Details, see Dwg 18.

STATE OF NEW YORK
DEPARTMENT OF TRANSPORTATION
DIVISION OF DESIGN AND CONSTRUCTION

INTERSTATE ROUTE 481

BRIDGES 4(SB) & 5(NB)

OVER TAFT ROAD

Br. 4 (SB) Transverse Section and Structural Slab

PROJ. ENG. H. WINKLER | DATE MADE 9/23/81

DESIGNED BY [illegible] DETAILED BY [illegible]
DESIGN CHECKED BY [illegible] DETAIL CHECKED BY [illegible]

88 178 11-78 ⌐ POLYTRACE 040

10722
D250(

FED. RD. REG. NO.	STATE	FEDERAL AID PROJECT NO.	SHEET NO.	T SI
	NEW YORK	I-481-2(16)	277	3

INTERSTATE RTE. 571 EXTENSION (I-481)
COLLAMER INTERCHANGE TO NORTHERN BLVD.
ONONDAGA COUNTY

CAPITAL PROJECT IDENTIFICATION NO. 3107.00

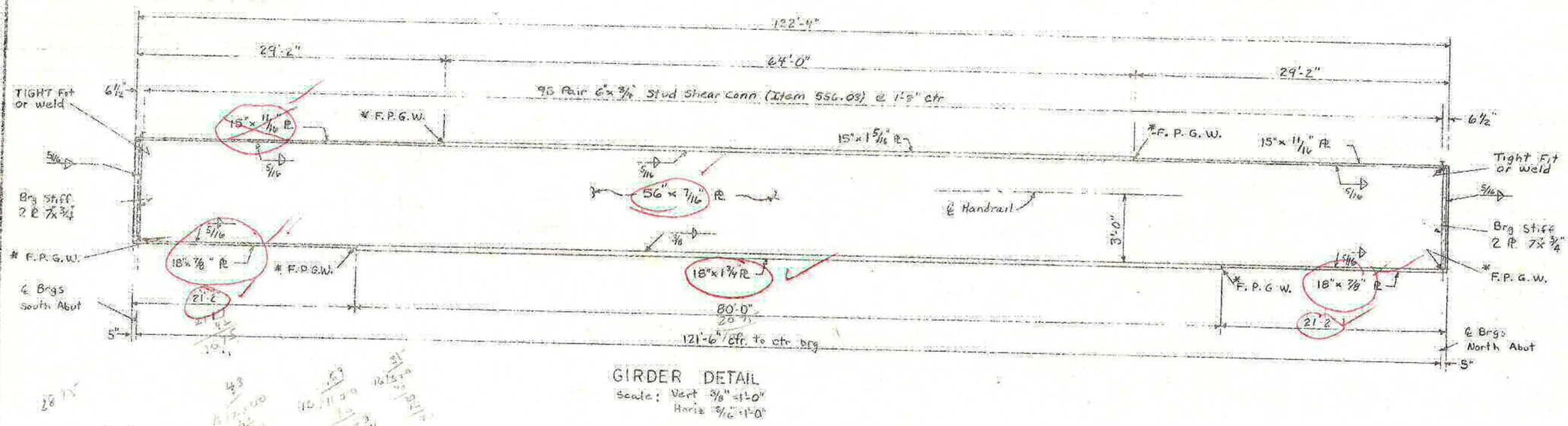

GIRDER DETAIL
Scale: Vert 3/8"=1'-0"
Horiz 3/16"=1'-0"

Notes:
1. * F. P. G. W. = Full Penetration Groove
2. End diaphragms placed along ℄ Brg Intermediate Diaphragms placed radia
3. All structural steel shall conform t ASTM A-588, unpainted
4. For Diaphragm Details see Dwgs 1
5. For Girder Sections and Tables see Dwg 20
6. For Stud Shear Connector Details, Sw Handrail Details and Flange Taper Details, see Dwg 21
7. The ends of all girders and their be stiffner plates shall be vertical. All Connection Pl's may be perpendicular To the Top flange Pl.

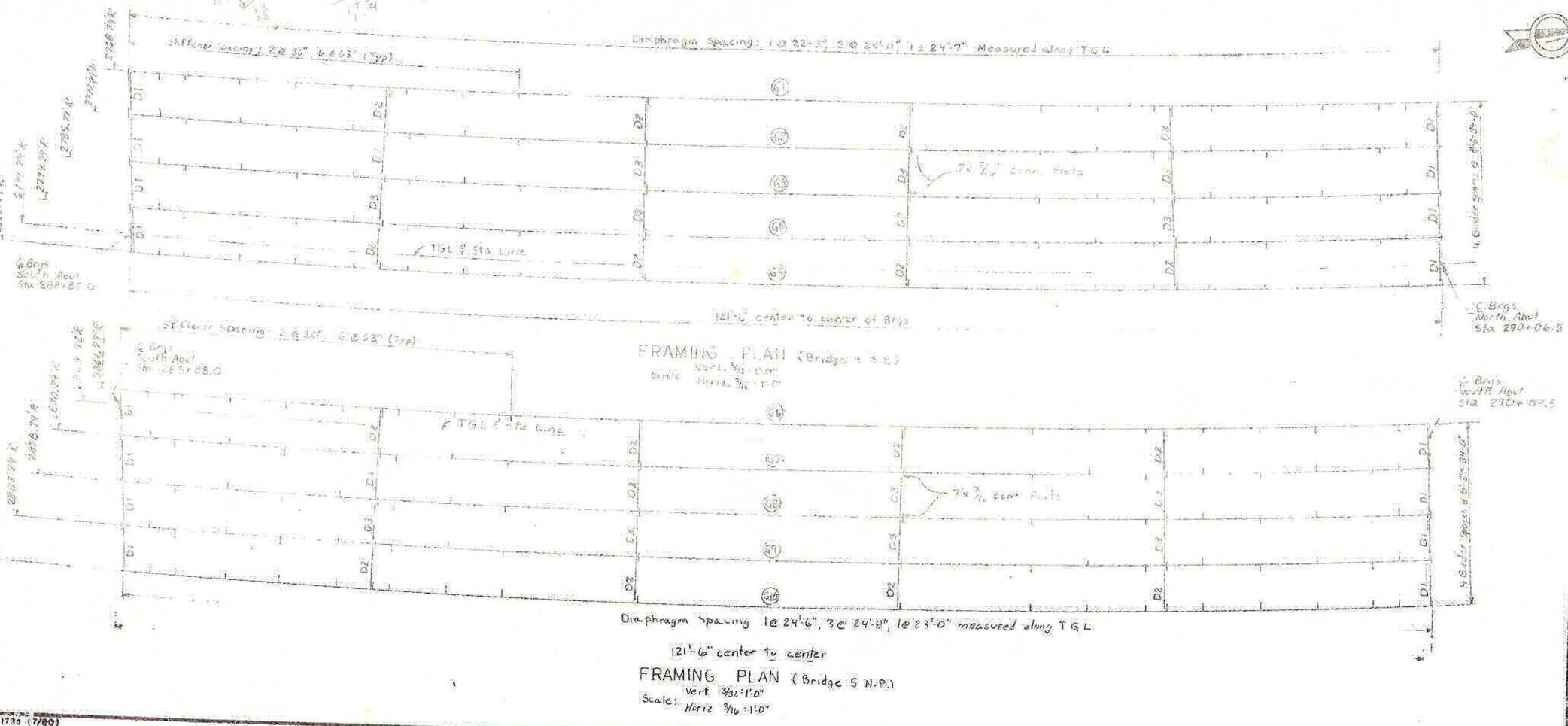

FRAMING PLAN (Bridges 4 S.B.)
Scale: Vert. 3/32"=1'-0"
Horiz. 3/16"=1'-0"

FRAMING PLAN (Bridge 5 N.B.)
Scale: Vert 3/32"=1'-0"
Horiz 3/16"=1'-0"

STATE OF NEW YORK
DEPARTMENT OF TRANSPORTATION
DIVISION OF DESIGN AND CONSTRUCTION

INTERSTATE ROUTE 481
BRIDGES 4(SB) & 5(NB)
OVER TAFT ROAD
Girder Elevation and Framing Plans

PROJ. ENG.

DESIGNED BY EE
DETAILED BY
DESIGN CHECKED BY
DETAIL CHECKED BY

SD 1736 (7/80)

D259214

3/3 1072581

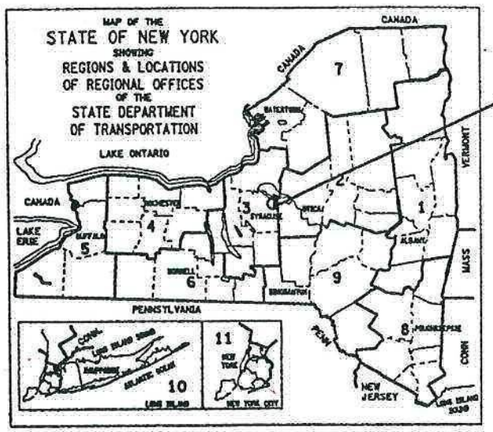

PROJECT LOCATION

STATE OF NEW YORK
DEPARTMENT OF TRANSPORTATION
OFFICE OF ENGINEERING

BRIDGE REHABILITATION PROJECT (ELEMENT SPECIFIC)
VARIOUS BRIDGES ON INTERSTATE 481
TOWNS OF DEWITT AND CICERO

VOLUME 1 OF 2

432 SHEETS ONONDAGA COUNTY CONTRACT D259214

F.A. PROJECT

STANDARD SHEETS

M203-4, M203-5, M203-6R1, M603-1
M606-32, M606-33, M606-34,
M619-3R1, M619-4, M619-5
M685-1, M685-2R1, M685-3R1
M685-4R1, M685-5R1, M403-1, M203-4,
M203-5, M203-6R1, M603-1

BTO 11/30/04
10/24/06
10/28/06
9/19/12

THIS IS A BRIDGE REHABILITATION PROJECT ON VARIOUS BRIDGES ON INTERSTATE 481, LOCATED IN THE TOWNS OF CICERO AND DEWITT IN ONONDAGA COUNTY. THIS WORK CONSISTS OF BRIDGE JOINTS, BEARINGS, BRIDGE RAIL AND CONCRETE REPAIR OF SUBSTRUCTURES. THERE ARE 28 BRIDGES IN THE PROJECT BEGINNING AT REFERENCE MARKER 481I-3301-1000 SOUTH OF THE CITY OF SYRACUSE AND ENDING AT REFERENCE MARKER 481I-3301-2143. I481 INTERCHANGE NORTH OF THE CITY.

ALL WORK CONTEMPLATED UNDER THIS CONTRACT IS TO BE COVERED BY AND IN CONFORMITY WITH THE STANDARD SPECIFICATIONS (METRIC UNITS) OF JANUARY 2, 2002, AS AMENDED BY ADDENDA NOS. 1 AND 2, EXCEPT AS MODIFIED ON THESE PLANS AND IN THE ITEMIZED PROPOSAL.

CONTRACTOR'S NAME _____
AWARD DATE _____
COMPLETION DATE _____
FINAL ACCEPTANCE DATE _____
REGIONAL DIRECTOR _____
ENGINEER IN CHARGE _____
FINAL COST TOTAL _____

FISCAL SHARE COST(S)

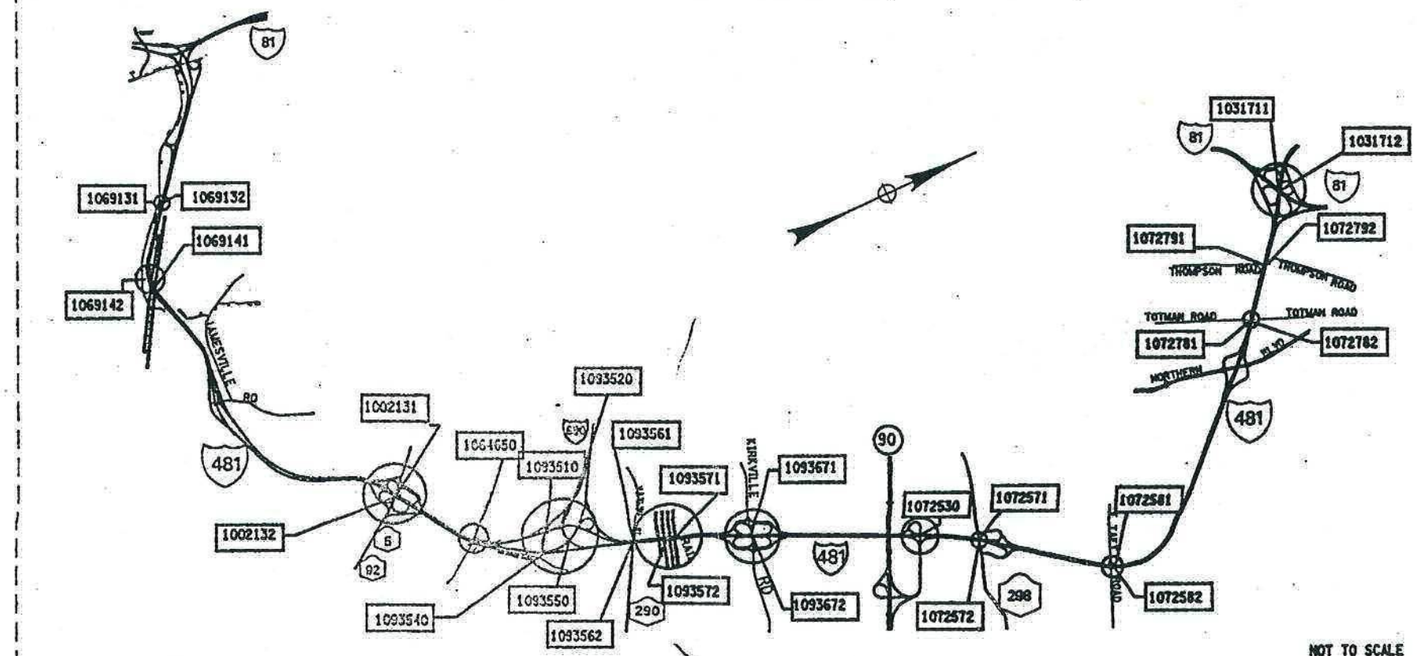

PROJECT LOCATION

BRIDGE REHAB. PROJ.- ELEMENT SPECIFIC			
VARIOUS BRIDGES ON INTERSTATE 481			
TOWNS OF DEWITT AND CICERO			
ONONDAGA COUNTY			
FED. ROAD REG. NO.	STATE	SHEET NO.	TOTAL SHEETS
1	N.Y.	1	432
FEDERAL AID PROJECT NO.			
CAPITAL PROJECT IDENTIFICATION NO. 3056.13			

INDEX ON SHEET NO. 5 & 6

RECOMMENDED BY John E. Fritze 9/04/02 REGIONAL DESIGN ENGINEER DATE
RECOMMENDED BY Myron A. Shirley 9/4/02 REGIONAL CONSTRUCTION ENGINEER DATE
RECOMMENDED BY 9/04/02 REGIONAL TRANSPORTATION MAINTENANCE ENGINEER DATE
RECOMMENDED BY 9-4-02 REGIONAL TRAFFIC ENGINEER DATE
APPROVED BY 09-04-02 REGIONAL DIRECTOR DATE

DESIGN SUPERVISOR Clement JOB MANAGER Nick DeCirco DESIGNED BY CHECKED BY ESTIMATED BY DRAFTED BY CHECKED BY

FED ROAD REG. NO.	STATE	CONTRACT NO.	SHEET NO.	TOTAL SHEETS
1	N.Y.	D259214	362	432

BRIDGE REHABILITATION PROJECT (ELEMENT SPECIFIC)
VARIOUS BRIDGES ON INTERSTATE 481
TOWNS OF DEWITT AND CICERO
ONONDAGA COUNTY
P.I.N. 305613 | B.I.N. ALL BINS

BRIDGE JOINT TABLE

B.I.N. NUMBER	JOINT LOCATION	JOINT SKEW	SPAN(S) LENGTH FOR JOINT (METERS)	JOINT BEND LOCAT'N RT	JOINT BEND LOCAT'N LT	EXISTING JOINT TYPE	PROPOSED JOINT TYPE	CURB TO CURB DISTANCE (METERS) (SEE NOTES)	FASCIA & MEDIAN LENGTH (METERS) LT/RT	TOTAL LENGTH (METERS)	JOINT ITEM NUMBER(S)	DRAWING NUMBER SECT VIEW	DRAWING NUMBER PLAN VIEW	DRAWING NUMBER FASCIA DETAIL
1072530	EAST ABUT.	0°-00'-00"	33.528	N	N	ACJ	MAC-5	15.850	.457/.457	16.764	567.35M	JD-30	JD-29	JD-30
	WEST ABUT.	0°-00'-00"	37.795	N	N	ACJ	MAC-5	15.850	.457/.457	16.764	567.35M	JD-30	JD-29	JD-30
1072571	SOUTH ABUT.	20°-29'-45.2"	44.196	N	N	ACJ	MAC-6	14.481	.488/.488	15.457	567.36M	JD-32	JD-31	JD-32
	NORTH ABUT.	20°-29'-45.2"	———	N	N	ACJ	MAC-1	15.456	.488/.488	16.428	567.31M	JD-32	JD-31	JD-32
1072572	SOUTH ABUT.	21°-09'-2.1"	44.196	N	N	ACJ	MAC-6	12.746	.490/.490	13.726	567.36M	JD-34	JD-33	JD-34
	NORTH ABUT.	21°-09'-2.1"	———	N	N	ACJ	MAC-1	12.746	.490/.490	13.726	567.31M	JD-34	JD-33	JD-34
1072581	SOUTH ABUT.	3°59'-27.5"	37.033	N	N	ACJ	MAC-5	11.917	.458/.458	12.833	567.35M	JD-36	JD-35	JD-36
	NORTH ABUT.	3°-59'-27.5"	———	N	N	ACJ	MAC-1	11.917	.458/.458	12.833	567.31M	JD-36	JD-35	JD-36
1072582	SOUTH ABUT.	3°-51'-57.9"	37.033	N	N	ACJ	MAC-5	11.915	.458/.458	12.831	567.35M	JD-38	JD-37	JD-38
	NORTH ABUT.	3°-51'-57.9"	———	N	N	ACJ	MAC-1	11.915	.458/.458	12.831	567.31M	JD-38	JD-37	JD-38
1072781	EAST ABUT.	16°-26'-24"	———	N	N	ACJ	MAC-1	12.500	.530/.530	13.560	567.31M	JD-40	JD-39	JD-40
	WEST ABUT.	16°-26'-24"	33.635	N	N	ACJ	MAC-5	12.500	.530/.530	13.560	567.35M	JD-40	JD-39	JD-40
1072782	EAST ABUT.	16°-26'-24"	———	N	N	ACJ	MAC-1	13.183	.530/.530	14.243	567.31M	JD-42	JD-41	JD-42
	WEST ABUT.	16°-26'-24"	31.394	N	N	ACJ	MAC-5	12.589	.530/.530	13.649	567.35M	JD-42	JD-41	JD-42
1072791	EAST ABUT.	17°-02'-59.4"	30.785	N	N	ACJ	RCS	12.566	.531/.531	13.628	16567.64M	JD-47	JD-43	JD-47
	WEST ABUT.	17°-02'-59.4"	———	N	N	ACJ	RCS	12.566	.531/.531	13.628	16567.64M	JD-47	JD-43	JD-47
1072792	EAST ABUT.	17°-02'-59.4"	30.785	N	N	ACJ	MAC-5	12.566	.530/.530	14.015	567.35M	JD-44	JD-43	JD-44
	WEST ABUT.	17°-02'-59.4"	———	N	N	ACJ	MAC-1	12.566	.530/.530	14.015	567.31M	JD-44	JD-43	JD-44
1093510	WEST ABUT.	44°-07'-00"	———	N	N	ACJ/ADA	RCS	16.560	.637/.637	17.834	16567.64M	JD-46	JD-45	JD-46
	EAST ABUT.	40°-26'-00"	37.522	N	N	ADA	RADA	15.620	———	15.620	———	JD-46	JD-45	———

LEGEND

EXISTING JOINT TYPE:

ACJ = ARMORED COMPRESSION JOINT SYSTEM
MOD = MODULAR JOINT SYSTEM
MAC = MODIFIED ARMORED COMPRESSION SYSTEM (NO HORIZ. ARMORING ANGLE)
ADA = ARMORED DECK ANGLE
SS = STRIP SEAL JOINT
OPEN = OPEN JOINT

PROPOSED JOINT TYPE:

MAC-1 = MOD. ARM./COMP. SEAL JT. SYS. (A-1)
MAC-2 = MOD. ARM./COMP. SEAL JT. SYS. (A-2)
MAC-5 = MOD. ARM./COMP. SEAL JT. SYS. (A-5)
MAC-6 = MOD. ARM./COMP. SEAL JT. SYS. (A-6)
RCS = REPLACE EXISTING COMPRESSION SEAL
RADA = REMOVE ARMOR DECK ANGLE
MOD-1 = MODULAR JT. SYS. (ONE-CELL)
MOD-2 = MODULAR JT. SYS. (TWO-CELL)

JOINT BEND LOCATION:

N = NO BENDS
CRB = CURB LINE
PAV'T = PAVEMENT

GENERAL NOTES:

- ALL MEASUREMENTS SHALL BE FIELD VERIFIED.
- CURB TO CURB LENGTHS ARE MEASURED ALONG ℄ OF JOINT.
- MULTIPLE DIMENSIONS ARE SHOWN LOOKING UP-STATION, LEFT TO RIGHT.
- ALL DIMENSIONS ARE SHOWN IN METERS.

INFORMATIONAL NOTES:

BIN 1072530 - NO JOINT AT PIER.

BIN 1072791 - REPLACE COMPRESSION SEALS
BEG. ABUT. (EAST), TYPE A-5
END ABUT. (WEST), TYPE A-1

FOR JOINT DETAILS REFER TO THE FOLLOWING DRAWINGS:

DWG. NO. JD-1 - MODIFIED ARMORED COMPRESSION SEAL JOINT SYSTEM.
DWG. NO. JD-24 - ONE-CELL MODULAR JOINT SYSTEM.
DWG. NO. JD-25 - TWO-CELL MODULAR JOINT SYSTEM.

LIST OF BRIDGE JOINT ITEMS USED:

ITEM 566.01M - MODULAR EXP. JOINT SYSTEM ONE-CELL (M)
ITEM 566.02M - MODULAR EXP. JOINT SYSTEM TWO-CELL (M)
ITEM 567.31M - MODIFIED ARMORED JOINT SYSTEM W/ COMP. SEAL TYPE A1 (m)
ITEM 567.32M - MODIFIED ARMORED JOINT SYSTEM W/ COMP. SEAL TYPE A2 (m)
ITEM 567.35M - MODIFIED ARMORED JOINT SYSTEM W/ COMP. SEAL TYPE A5 (m)
ITEM 567.36M - MODIFIED ARMORED JOINT SYSTEM W/ COMP. SEAL TYPE A6 (m)
ITEM 16567.640001M - REPLACE COMPRESSION SEAL FOR EXISTING BRIDGE JOINTS (m)

ALL DIMENSIONS ARE IN m UNLESS OTHERWISE NOTED

AS BUILT REVISIONS

SIGNATURE ——— DATE ———

INTERSTATE 481 VARIOUS BRIDGES

BRIDGE JOINT TABLE

STATE OF NEW YORK
DEPARTMENT OF TRANSPORTATION

FILENAME	REGION	DATE	DRAWING NO.
305613AJJA1	3	10/02	JT-2

DESIGN SUPERVISOR ——— JOB MANAGER ——— DESIGNED BY ——— DRAFTED BY ——— ESTIMATED BY ——— CHECKED BY ———

FED ROAD REG. NO.	STATE	CONTRACT NO.	SHEET NO.	TOTAL SHEETS
1	N.Y.	D259214	399	432

BRIDGE REHABILITATION PROJECT (ELEMENT SPECIFIC)

VARIOUS BRIDGES ON INTERSTATE 481

TOWNS OF DEWITT AND CICERO

ONONDAGA COUNTY

P.I.N. 305613 | B.I.N. 1072581

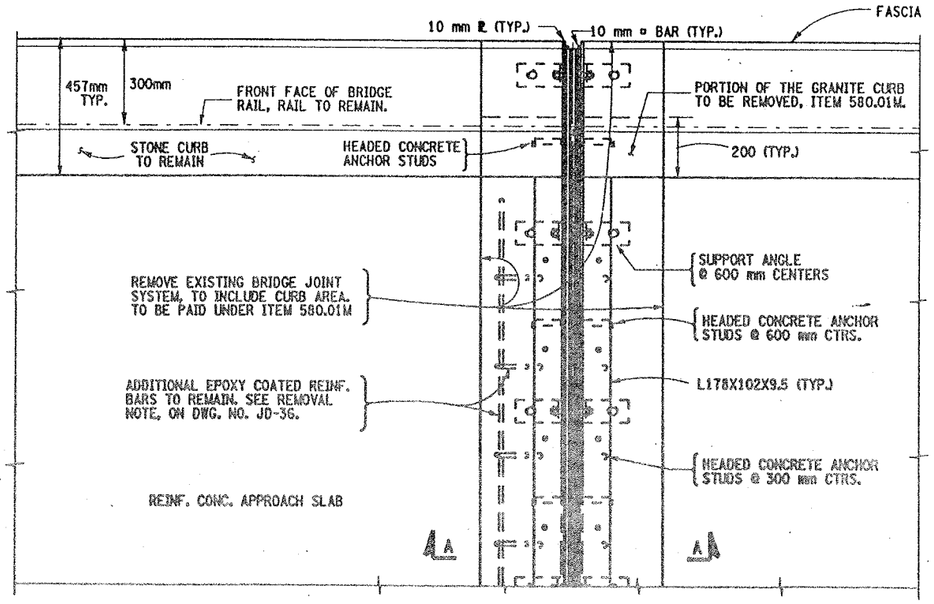

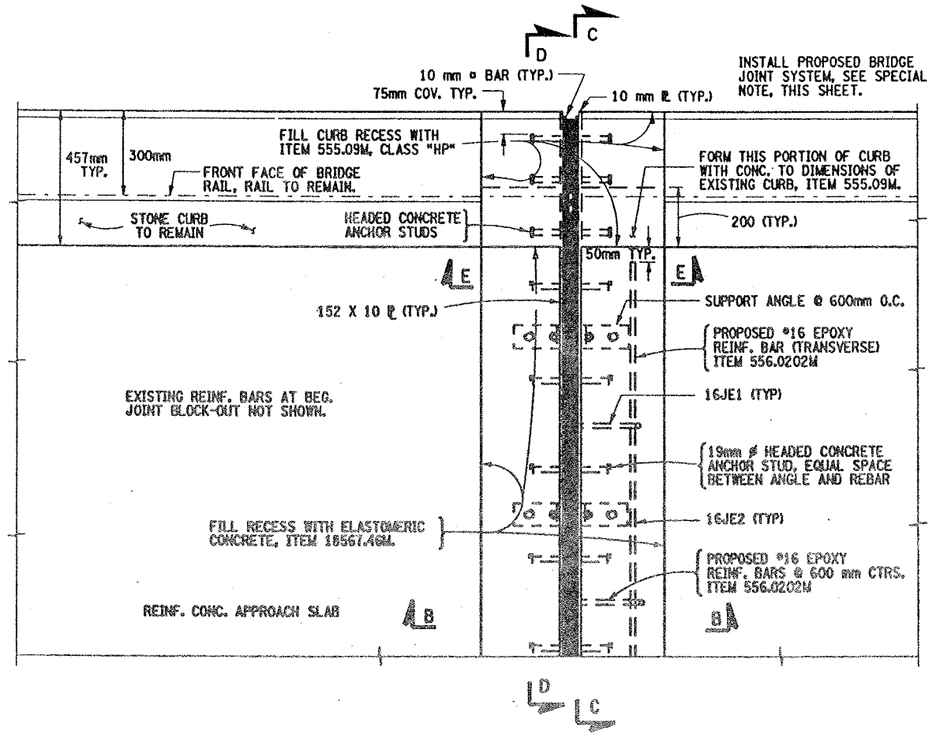

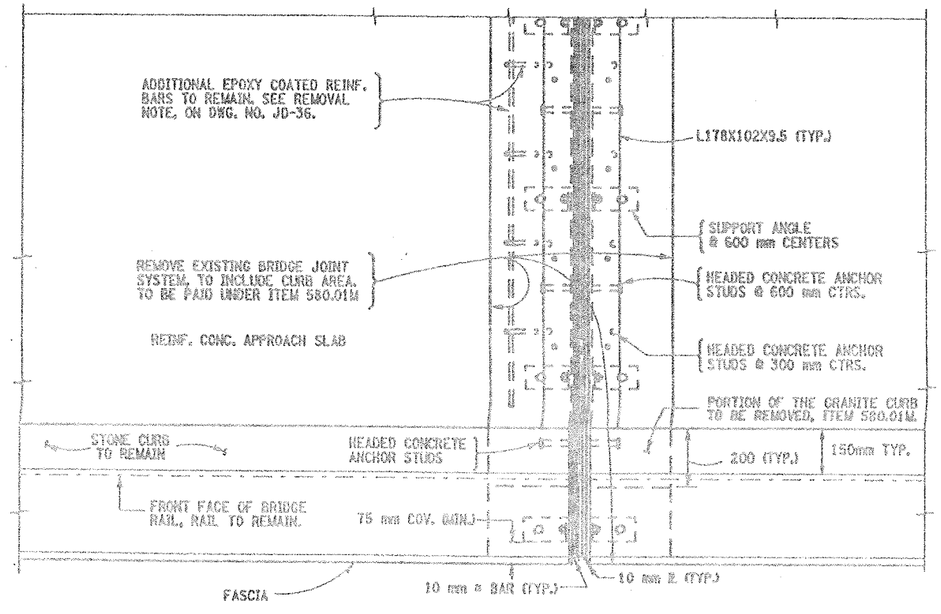

EXISTING ABUTMENT JOINT PARTIAL PLAN

BIN 1072581 - BEG. ABUT. SHOWN
END ABUT. SIMILAR

NOT TO SCALE

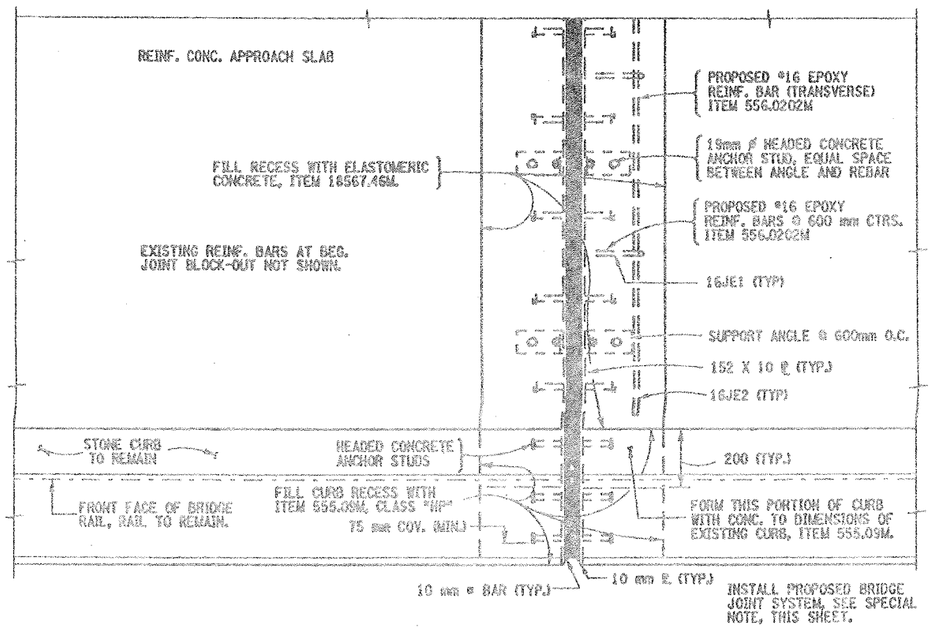

PROPOSED ABUTMENT JOINT PARTIAL PLAN

BIN 1072581 - BEG. ABUT. SHOWN
END ABUT. SIMILAR

NOT TO SCALE

NOTES:

1. REFER TO DWG. NO. JD-1 FOR PROPOSED JOINT DETAILS AND ALL NOTES SHALL APPLY.
2. FOR SECTION VIEWS SEE DWG. NO. JD-36.
3. REFER TO DWG. NO. JT-2 FOR PROPOSED BRIDGE JOINT INSTALLATION LOCATIONS.
4. THE SECTION OF THE GRANITE CURB SHALL BE SAWCUT TO PRODUCE NEAT REMOVAL LINES. COST BE TO INCLUDED IN PRICE BID FOR 580.01M.
5. THE STRUCTURE HAS A 3°-59'-27.5" SKEW ANGLE.
6. BRIDGE JOINT REPAIRS/REPLACEMENT SHALL BE CONDUCTED UTILIZING NIGHT-TIME CONSTRUCTION TECHNIQUES FOR BOTH OF THESE STRUCTURES. WHEN EVER THE JOINT BLOCK-OUT CONCRETE IS REMOVED OR CURING. STEEL ROAD PLATES SHALL BE USED. REFER TO DWG. NO. AA-RP1 FOR ROAD PLATE DETAILS.

SPECIAL NOTE:

BIN 1072581 - INSTALL ITEM 567.35M FOR SOUTH ABUT. JOINT.
INSTALL ITEM 567.31M FOR NORTH ABUT. JOINT.

WORK TO BE DONE:

REPLACE BEGINNING AND END ABUTMENT JOINTS.

ITEMS USED:

ITEM 555.09M	-	STRUCT. CONCRETE, CLASS "HP" (CM)
ITEM 556.0202M	-	EPOXY-COATED BAR REINF. FOR STRUCT. (KG)
ITEM 567.31M	-	MOD.ARM. JOINT SYSTEM W/COMP. SEAL TYPE A-1 (M)
ITEM 567.35M	-	MOD. ARM. JOINT SYSTEM W/COMP. SEAL TYPE A-5 (M)
ITEM 18567.46M	-	ELASTOMERIC CONCRETE FOR BRIDGE JOINT SYSTEMS (M)
ITEM 580.01M	-	REMOVAL OF STRUCT. CONCRETE (CM)

ALL DIMENSIONS ARE IN mm UNLESS OTHERWISE NOTED

AS BUILT REVISIONS

SIGNATURE DATE

INTERSTATE 481 SB
OVER
TAFT ROAD

BRIDGE JOINT DETAILS

STATE OF NEW YORK
DEPARTMENT OF TRANSPORTATION

FILENAME	REGION	DATE	DRAWING NO.
305613AJ_JA1	3	10/02	JD-35

DESIGN SUPERVISOR ____ JOB MANAGER ____ DESIGNED BY ____ ESTIMATED BY ____ DRAFTED BY ____ CHECKED BY ____

FED ROAD REG. NO.	STATE	CONTRACT NO.	SHEET NO.	TOTAL SHEETS
1	N.Y.	D259214	400	432
BRIDGE REHABILITATION PROJECT (ELEMENT SPECIFIC)				
VARIOUS BRIDGES ON INTERSTATE 481				
TOWNS OF DEWITT AND CICERO				
ONONDAGA COUNTY				
P.I.N. 305613		B.I.N. 1072581		

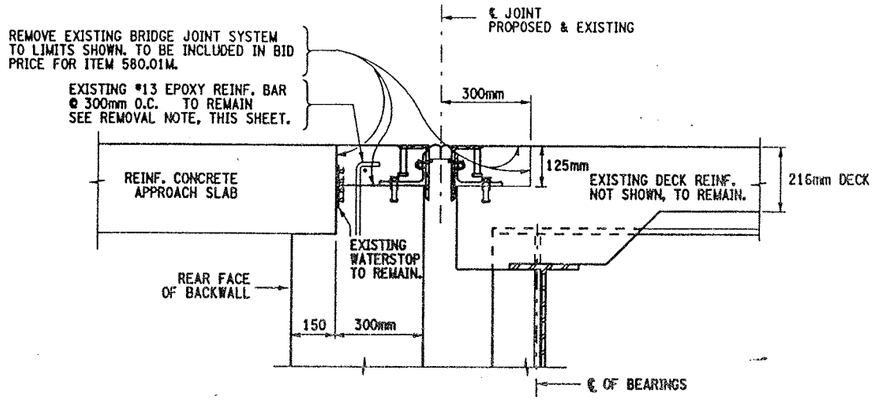

SECTION A-A
EXISTING ABUTMENT JOINT

NOT TO SCALE

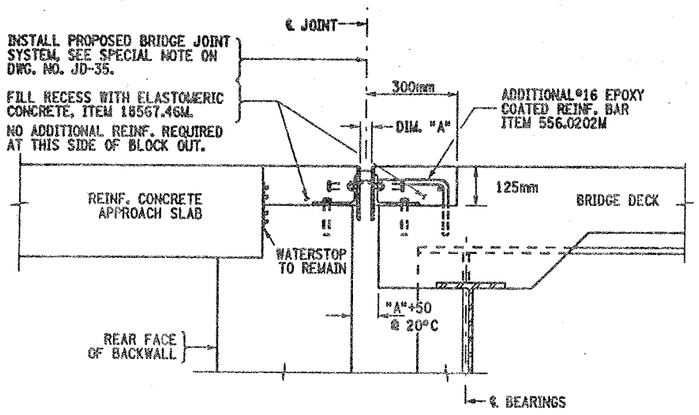

SECTION B-B
PROPOSED ABUTMENT JOINT

NOT TO SCALE

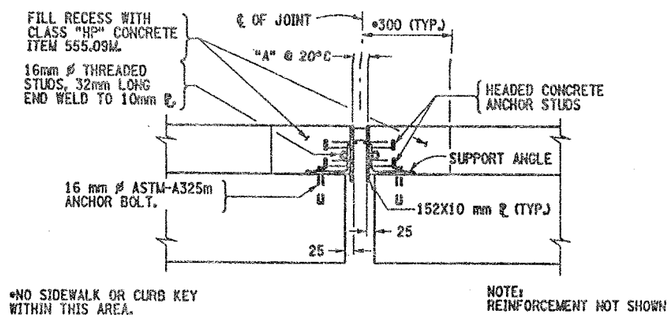

PROPOSED ABUTMENT JOINT
SECTION E-E

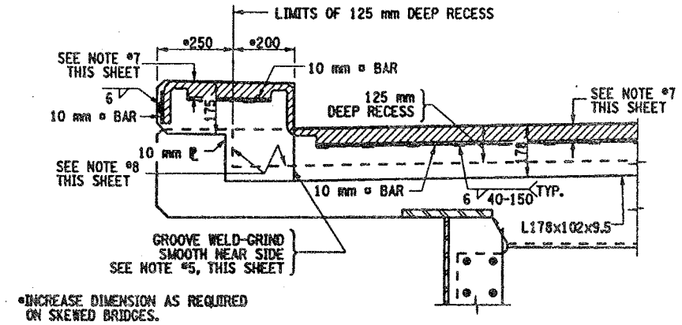

PROPOSED ABUTMENT JOINT
SECTION C-C (BRUSH CURB)

NOT TO SCALE

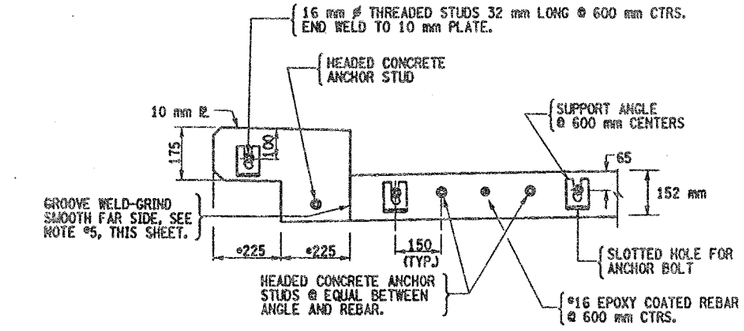

PROPOSED ABUTMENT JOINT
SECTION D-D (BRUSH CURB)

(ONLY THE STEEL SHOWN)

NOT TO SCALE

REMOVAL NOTE:

EXISTING EPOXY COATED REINF. BARS ENCOUNTERED AT THE JOINT BLOCK-OUTS, SHALL REMAIN. CARE SHALL BE TAKEN DURING REMOVAL OPERATIONS, NOT TO DAMAGE THE REINFORCEMENT BARS.

PRIOR TO PLACEMENT OF NEW CONCRETE THE EXISTING EPOXY BARS SHALL BE CLEANED AND ANY FIELD REPAIRS DEEMED NECESSARY BY THE ENGINEER, BE MADE AS PER SECTION 556-3.02(C) OF STANDARD SPECIFICATIONS. TO BE INCLUDED IN PRICE BID FOR ITEM 580.01M.

NOTES:

1. ACTUAL BRIDGE JOINT BLOCK-OUT DIMENSIONS MAY VARY. REMOVAL LIMITS SHALL BE TO EXISTING BLOCK-OUT LOCATIONS, AOBE.
2. EXISTING WATERSTOPS SHALL REMAIN.
3. FOR CALCULATION OF "A" DIMENSION REFER TO DWG. NO. JD-1.
4. REFER TO DWG. NO. JD-35 FOR PROPOSED PARTIAL PLAN VIEWS.
5. ALL WELDS SHALL BE GROUND SMOOTH TO THE SATISFACTION OF THE ENGINEER, ON SEAL CONTACT SIDE OF EDGE BEAM.
6. REFER TO DWG. NO. JD-1 FOR PROPOSED JOINT DETAILS AND ALL NOTES SHALL APPLY.
7. THIS DEPTH SHALL BE INDICATED ON THE SHOP DRAWINGS AND SHALL BE SUCH THAT WHEN THE SEAL IS COMPRESSED TO 50% OF ITS NOMINAL WIDTH, THE TOP OF THE SEAL SHALL BE NOT LESS THAN 6 mm NOR MORE THAN 19 mm BELOW THE TOP OF ROADWAY.
8. RECESSES RECEIVING ITEM 555.09M, AFTER SURFACE PREPARATION, THOROUGHLY WET THE CONCRETE SURFACES AND ALL POROUS SURFACES TO BE IN CONTACT WITH NEW CONCRETE FOR 12 HOURS. NOTE, THE USE OF MATERIAL SPECIF. 705-22 PORTLAND CEMENT MORTAR BONDING GROUT HAS BEEN ELIMINATED, (PROJECT PROPOSAL).

ITEMS USED:

ITEM 555.09M - STRUCT. CONCRETE, CLASS "HP" (CM)
ITEM 556.0202M - EPOXY-COATED BAR REINF. FOR STRUCT. (Kg)
ITEM 18567.46M - ELASTOMERIC CONCRETE FOR BRIDGE JOINT SYSTEMS (M)
ITEM 580.01M - REMOVAL OF STRUCT. CONCRETE (CM)

ALL DIMENSIONS ARE IN mm UNLESS OTHERWISE NOTED

AS BUILT REVISIONS

SIGNATURE DATE

INTERSTATE 481 SB
OVER
TAFT ROAD

BRIDGE JOINT DETAILS

STATE OF NEW YORK
DEPARTMENT OF TRANSPORTATION

FILENAME	REGION	DATE	DRAWING NO.
305613AJJA1	3	10/02	JD-36

DESIGN SUPERVISOR ____ JOB MANAGER ____ DESIGNED BY ____ ESTIMATED BY ____ DRAFTED BY ____ CHECKED BY ____ CHECKED BY ____

BIN: 1072581
I481 SB / Taft Rd

DECK DETERIORATION PLAN

NOT TO SCALE

N

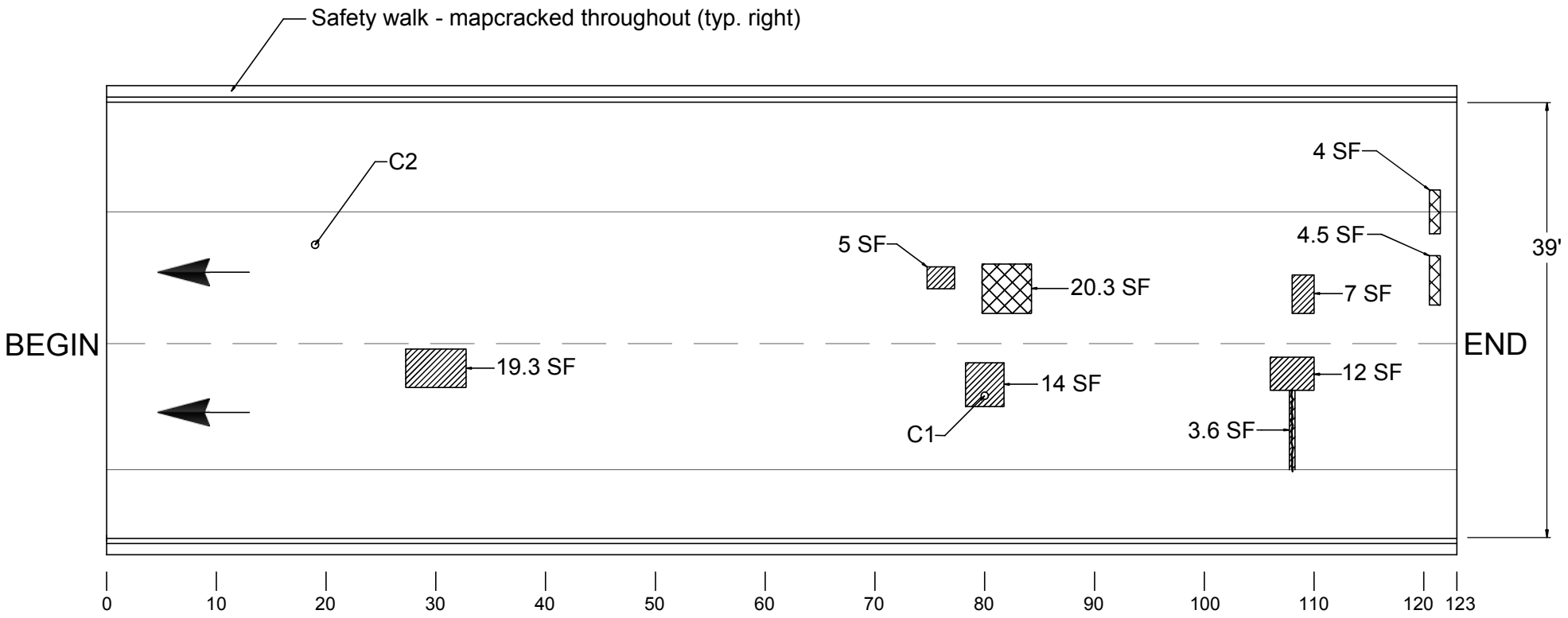

TOTAL DAMAGED AREA EQUALS 89.7 SF WHICH IS 1.9 % OF DECK SURFACE

LEGEND

- Hollow Concrete
- Patch
- Coring location
- Crack

IN-DEPTH PHOTO DOCUMENTATION

BIN: 1072581
I481 SB / Taft Rd

IN-DEPTH INSPECTION
PHOTO LOCATION PLAN

N

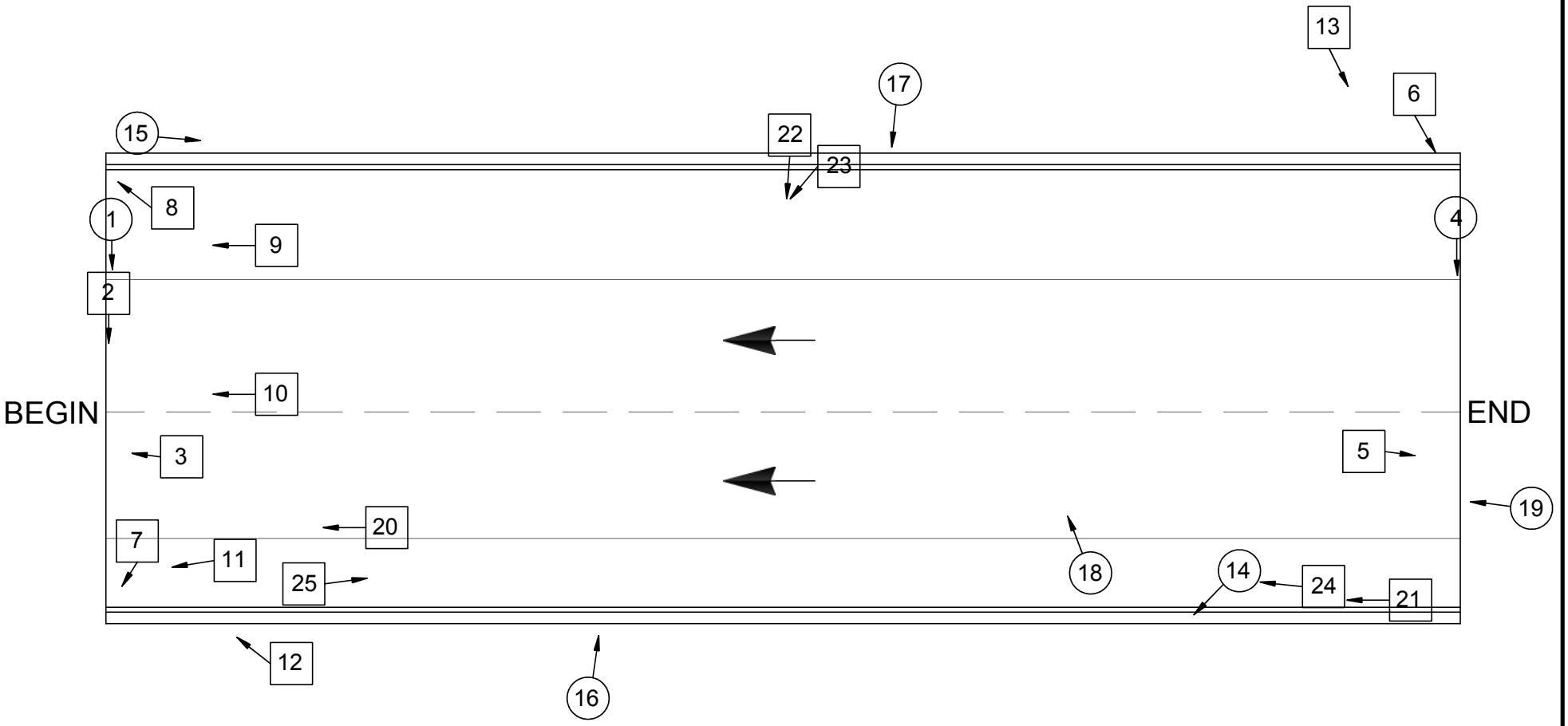

LEGEND	
(XX)	Photo Above Deck
[XX]	Photo Below Deck

In-Depth Inspection Photos

I-481 SB over Taft Rd., BIN 1072581



DESCRIPTION: BEGIN JOINT LEFT LANE (L-R)

PHOTO 1



DESCRIPTION: BEGIN JOINT UNDERSIDE BAY 2 (L-R)

PHOTO 2



DESCRIPTION: BEGIN BACKWALL BAY 3

PHOTO 3



DESCRIPTION: END JOINT LEFT LANE (L-R)

PHOTO 4



DESCRIPTION: END BACKWALL BAY 3 (TYP.)

PHOTO 5



DESCRIPTION: END LEFT PEDESTAL AND SEAT

PHOTO 6

In-Depth Inspection Photos

I-481 SB over Taft Rd., BIN 1072581



DESCRIPTION: BEGIN BACKWALL AT TOP RIGHT

PHOTO 7



DESCRIPTION: BEGIN BACKWALL AT LEFT

PHOTO 8



DESCRIPTION: BEGIN STEM AT BAY 1

PHOTO 9



DESCRIPTION: BEGIN STEM AT PEDESTAL 3

PHOTO 10



DESCRIPTION: BEGIN STEM AT PEDESTAL 5

PHOTO 11



DESCRIPTION: BEGIN STEM (R-L)

PHOTO 12



DESCRIPTION: END STEM

PHOTO 13



DESCRIPTION: RIGHT SAFETYWALK 25' FROM END (TYP.)

PHOTO 14



DESCRIPTION: LEFT FASCIA (B-E)

PHOTO 15



DESCRIPTION: RIGHT FASCIA AT SECOND SNOW FENCE POST

PHOTO 16

In-Depth Inspection Photos

I-481 SB over Taft Rd., BIN 1072581



DESCRIPTION: LEFT SNOW FENCE POST 5

PHOTO 17



DESCRIPTION: RIGHT LANE AT 0.7 SPAN (R-L)

PHOTO 18



DESCRIPTION: DECK FROM END APPROACH

PHOTO 19



DESCRIPTION: BAY 4 NEAR BEGIN (E-B)

PHOTO 20



DESCRIPTION: DECK AT RIGHT OVERHANG (E-B)

PHOTO 21



DESCRIPTION: GIRDER 1 NEAR MIDSPAN

PHOTO 22



DESCRIPTION: GIRDER 1 NEAR MIDSPAN

PHOTO 23



DESCRIPTION: GIRDER 5 (E-B)

PHOTO 24



DESCRIPTION: GIRDER 5 (B-E)

PHOTO 25

DESCRIPTION:

PHOTO

ASBESTOS SAMPLING SURVEY

Asbestos Sampling Survey

Location:

BIN 1072581
Interstate Route I-481 South Bound
over Taft Road

Prepared for:

New York State
Department of Transportation

PIN 3056.13.111

LaBella Project No. 201001

August 2001

Table of Contents

Page

I. Project Summary 1

II. Site Description 1

III. Inspection Procedures 1

IV. Results 2

Certification 2

Figures and Table

I. Project Summary

In accordance with conditions of Term Agreement D012606, LaBella Associates, P.C. conducted an asbestos sampling survey of the Interstate Route I-481 south bound bridge over Taft Road. Based on laboratory analyses of bulk samples collected, no asbestos-containing materials were identified.

II. Site Description

The Site is located in Onondaga County, New York. For the purpose of this report, the Site consists of the Interstate Route I-481 south bound bridge over Taft Road. (See attached FIGURE 1 - Site Location Map).

III. Inspection Procedures

The following procedures were used to obtain the data for this Report:

A. A review of record drawings supplied by Region 3 personnel and a visual inspection of the subject structure were conducted to identify potential visible/accessible sources of asbestos-containing materials. Observations and notes were made to provide a description of the structure, and an estimate of the approximate amount, length, or area of ACM present.

B. Physical or operational constraints, which might affect the removal of the ACM, were identified and reported.

C. Bulk samples of suspected ACM were collected during the site inspection of the subject structure. Samples were taken from each homogeneous area that may contain ACM.

D. Samples were submitted for analysis. Preliminary PLM analyses of NOB materials were performed by LaBella Laboratories, a NYSDOH approved laboratory, to determine the presence and percentage of asbestos in each sample. TEM analyses of NOB materials, if necessary, were performed by AMA Analytical, Inc.

E. Lab results were used to determine the approximate location, type, and amount of the verified ACM.

F. A drawing of the structure at the Site was created, in order to show sample locations and the approximate locations and amounts of confirmed ACM observed in accessible locations.

Only accessible areas were inspected. Inaccessible areas, such as areas within the bridge or the approaches to the bridge were not included in this inspection. No investigation was conducted by LaBella Associates to determine the presence of underground utilities on or in the immediate vicinity of the Site. Actual sample locations are shown in the attached FIGURE 2. Results of bulk sample analyses are tabulated in the attached TABLE.

IV. Results

BIN 1072581 Interstate Route I-481 South Bound over Taft Road

Based on laboratory analyses of bulk samples collected, no asbestos-containing materials were identified.

Certification

LaBella Associates, P.C. certifies the accuracy of this report, to the best of our knowledge, based on the information collected as described in the Inspection Procedures Section of this investigation.

Figures & Table

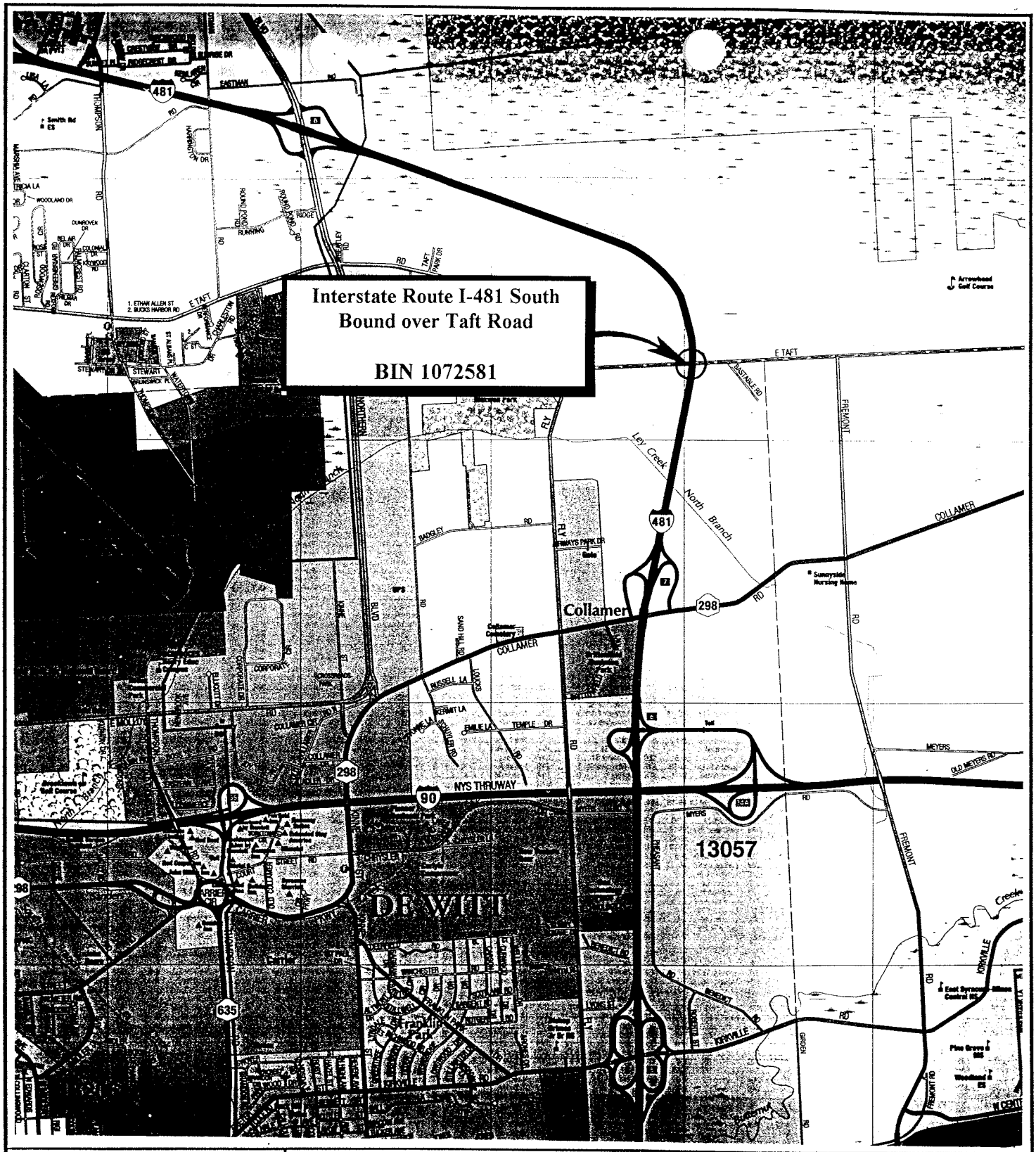

N

FIGURE 1
Site Location Map

Interstate Route I-481 South Bound over Taft Road Onondaga County, New York

LABELLA

PROJECT NO. 201001

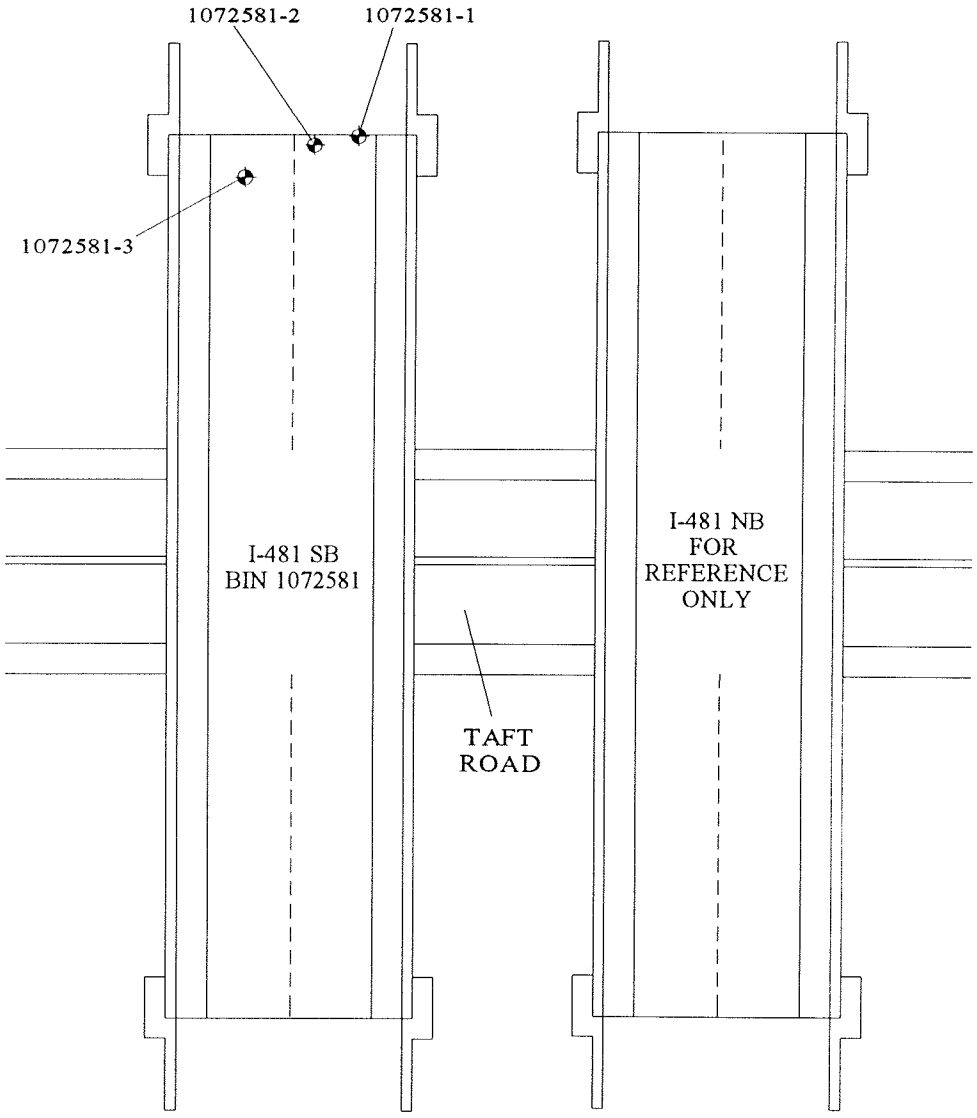

NOTE: NO ASBESTOS-CONTAINING MATERIALS IDENTIFIED.

LEGEND

◆ 1072581-1 SAMPLE LOCATION

NORTH	PROJECT TITLE: ASBESTOS SAMPLING SURVEY 19 BRIDGES ALONG INTERSTATE I-481 ONONDAGA COUNTY, NEW YORK	PROJECT NO. 201001 PIN 3056.13.111
	FIGURE TITLE: FIGURE 2 BIN 1072581 I-481 SB OVER TAFT ROAD SAMPLE LOCATIONS & CONFIRMED ACM	NOT TO SCALE DATE: AUGUST, 2001

Bulk Sample Results Table

Asbestos Sampling Survey
BIN 1072581
Interstate Route I-481 South Bound
over Taft Road
Onondaga County, New York
LaBella Project # 201001
PIN 3056.13.111

Sample #	Sample Location	Type of Material	Results % Asbestos	Amount of Material	Specification Item No.
1072581-1	North End of Bridge on Back Wall	Gray Masonry Coating	None Detected	N/A	N/A
1072581-2	North End of Bridge Beneath Bearing	Bearing Pad	None Detected	N/A	N/A
1072581-3	North End of Bridge on I-Beam	White Caulking Compound	None Detected	N/A	N/A

LATEST BIENNIAL INSPECTION REPORT

Inspection Date: 9/19/2012 RC: 33 BIN: 1072581

Bridge Ratings

Carried: 481I 481I33012107 Crossed: TAFT ROAD CR 18 CheckValue: 1,806,117,476

Inspection Agency: 10 - NYSDOT Type of Inspection: 1 - BIENNIAL
GTMS: A02 -- Unpainted Steel - Stringer/Multi-Beam or Girder
POSTINGS: See Gen Rec Page 1 for Postings at time of inspection.
Further Investigation Needed: No
State Highway Number: 70-7 Milepoint: 13.39 AADT/Yr: 11858 / 2002
Orientation: 1 - North Political Unit: 0233 - Town of DEWITT Year Built: 1985
Total Spans: 1 Ramp Bridge Attached To Span: NA BIN: NA
General Recommendation: 6 Computed Condition Rating: 5.688

Abutment Ratings:	Beg Abut	End Abut
Joint with Deck	6	6
Bearings, Bolts, Pads	5	5
Seats and Pedestals	5	5
Backwall	6	6
Stem (Breastwall)	6	6
Erosion or Scour	6	6
Footings	9	9
Piles	8	8
Recommendation	6	6

Wingwall Ratings:	Beg Abut	End Abut
Walls	6	6
Footings	9	9
Erosion or Scour	6	6
Piles	8	8

Channel Ratings:	Channel
Stream Alignment	8
Erosion and Scour	8
Waterway Opening	8
Bank Protection	8

Approach Ratings:	Approaches
Drainage	4
Embankment	6
Settlement	5
Erosion	5
Pavement	4
Guide Railing	5

Number of Flags Issued:

RED: 0 Yellow: 0 Safety: 0

Vulnerability Reviews Recommended: 1=Yes, 2=No, 3=NA, X=NotActive

Hydraulic: 3	Overload: X	Steel: 2
Collision: 2	Concrete: X	Seismic: X

Inspector's Signature: CheckValue: 1,806,117,476 Date: 9/19/2012

Peter Riehlman,PE () (Inspector ID:3000052)

Signed copy of this inspection report is available in the appropriate NYSDOT Regional Office

Reviewed By: Date: 11/7/2012

James R. Manning,PE () (QC ID:3000023)

Signed copy of this inspection report is available in the appropriate NYSDOT Regional Office

Inspection Date: 9/19/2012 RC: 33 BIN: 1072581

Span Ratings

Carried: 481I 481I33012107 Crossed: TAFT ROAD CR 18 CheckValue: 1,806,117,476

Deck Element Ratings:	**001**
Wearing Surface	5
Curbs	4
Sidewalks, Fascias	5
Railings, Parapets	6
Scuppers	8
Gratings	8
Median	8
Mono Deck Surface	6

Superstructure Ratings:	**001**
Structural Deck	6
Primary Members	6
Secondary Members	6
Paint	5
Joints	8
Recommendation	6

Pier Ratings:	**001**
Bearings, Bolts, Pads	8
Pedestals	8
Top of Cap or Beam	8
Stem Solid Pier	8
Cap Beam	8
Pier Columns	8
Footings	8
Erosion or Scour	8
Piles	8
Recommendation	8

Utility Ratings:	**001**
Lighting	8
Sign Structure	8
Utilities and Support	8

Field Notes:

Field Date	Arrival	Departure	Temp (C)	Temp (F)	Weather Conditions
9/19/2012	1:00:00 PM	2:30:00 PM		65	cldy.

Inspection Date: 9/19/2012 RC: 33 BIN: 1072581

Inspection Notes

Carried: 481I 481I33012107 Crossed: TAFT ROAD CR 18 CheckValue: 1,806,117,476

Note ID: 331210725810003

Beg Abut -- Abutment: Seats and Pedestals -- Rated 5, Was 5
End Abut -- Abutment: Seats and Pedestals -- Rated 5, Was 5
Referenced Photos: "5", "6"
2012- Cracks evident on front and side faces of both fascia pedestals rate 5

Note ID: 331210725810001

Approaches: Drainage -- Rated 4, Was 5
Referenced Photos: "1", "2", "4"
2012 Sand and vegetation buildup along the left and right curb and at the approaches. Up to 2" of sand in some places.
This is preventing proper drainage off the bridge on both the left and right side.

Note ID: 331210725810000

Approaches: Pavement -- Rated 4, Was 4
Referenced Photos: "2", "3"
2012
Asphalt along left side of beginning approach slab is cracking, raveling and is depressed about 1" for length of slab.
End approach asphalt cracking along edge of approach slab with plow scrape marks in slab concrete.

Note ID: 331210725810002

Span 001 -- Deck Elements: Curbs -- Rated 4, Was 5
Referenced Photos: "1", "4"
2012 Sand and vegetation buildup along the left and right curb and at the approaches. Up to 2" of sand in some places.
This is preventing proper drainage off the bridge on both the left and right side.

Inspection Date: 9/19/2012 RC: 33 BIN: 1072581

Inspection Photos in Photo Number Order

Carried: 481I 481I33012107 Crossed: TAFT ROAD CR 18 CheckValue: 1,806,117,476

Beg Rt appr drainage/curb looking toward End



Photo Number: 1 Photo Filename: DSCN4938.jpg

Location:
Beg Lt appr



Photo Number: 2 Photo Filename: DSCN4935.jpg

Inspection Date: 9/19/2012 RC: 33 BIN: 1072581

Inspection Photos in Photo Number Order

Carried: 481I 481I33012107 Crossed: TAFT ROAD CR 18 CheckValue: 1,806,117,476

Location:
End Lt appr pavt



Photo Number: 3 Photo Filename: DSCN4929.jpg

Location:
End Lt appr drainage/curb looking toward Beg



Photo Number: 4 Photo Filename: DSCN4932.jpg

Inspection Date: 9/19/2012 RC: 33 BIN: 1072581

Inspection Photos in Photo Number Order

Carried: 481I 481I33012107 Crossed: TAFT ROAD CR 18 CheckValue: 1,806,117,476

End Ped #5 looking Lt



Photo Number: 5 Photo Filename: DSCN4959.jpg

Location:
End Ped #1 looking Lt

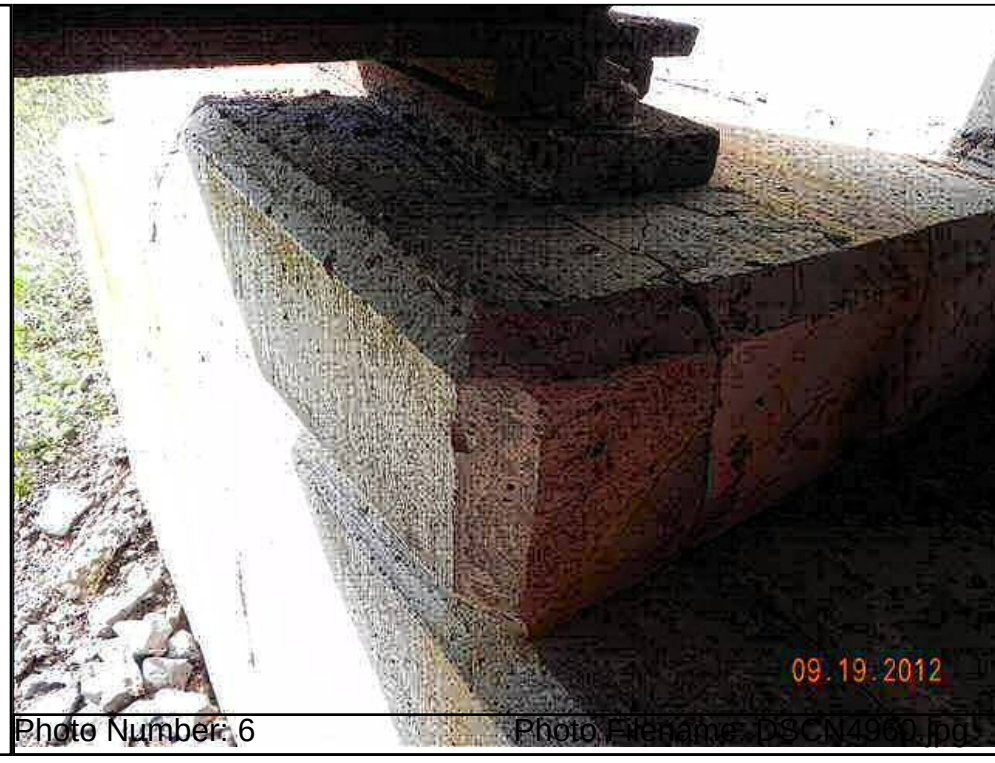

Photo Number: 6 Photo Filename: DSCN4960.jpg

Inspection Date: 9/19/2012 RC: 33 BIN: 1072581

Inspection Sketches in Sketch SysID Order

Carried: 481I 481I33012107 Crossed: TAFT ROAD CR 18 CheckValue: 1,806,117,476

Sketch ID: 331210725810000 Sketch Filename: LdRatNCL.12

General Sketch for Bridge
Referenced Photos:

Region 3 LoadRatingFieldCheckForm

NYSDOT BRIDGE INSPECTION REPORT			
SHEET	1	OF	1

LOAD RATING FIELD CHECK FORM

BIN:	1072581	Insp. Date:	09/19/2012

Dead Load - Note Changes since Last load Rating or state "NONE":

NONE

Section Loss -Note Changes since Last load Rating or state "NONE":

NONE

Additional Notes:

NONE

Attachments:

Team Leader: Peter Riehlman

Inspection Date: 9/19/2012 RC: 33 BIN: 1072581

Gen. Rec., Postings, Federal Ratings, etc.

Carried: 481I 481I33012107 Crossed: TAFT ROAD CR 18 CheckValue: 1,806,117,476

Overall Condition:

GENERAL RECOMMENDATION: 6

Computed Condition Rating: 5.688

Problems Requiring Action:

NO Further Investigation Needed

NO Flags Issued

POSTINGS:

Inspector Confirmed existing Posting data as correct.
Posted Vertical Clearance ON the bridge is: No Posting
Posted Vertical Clearance UNDER the bridge is: No Posting
No Load Restriction is posted on this bridge

Overloads Observed:

NO Overload Vehicles were observed on this bridge

FEDERAL RATINGS:

NBI Deck Condition: 8
NBI Superstruct Condition: 8
NBI Substruct Condition: 8
NBI Channel Condition: N
NBI Culvert Condition: N

Diving Inspection Needs:

Diving Inspection Required? No Date of Last Diving Inspection: No Date

Inventory Problems:

Inventory Problems Exist? No

Miscellaneous:

Time Required to Inspect Bridge: 2 Hours

Lane Closure Needs: None Required

No Railroad Flagging Required

No Pedestrian Fence

There is a Snow Fence present

The BIN Plate is in OK condition

Inspection Date: 9/19/2012 RC: 33 BIN: 1072581

Gen. Rec., Postings, Federal Ratings, etc.

Carried: 481I 481I33012107 Crossed: TAFT ROAD CR 18 CheckValue: 1,806,117,476

Special Emphasis Inspection Required:

Non-Redundant/Fracture Critical Members - No
Pin and Hangers - No
Fatigue-Prone Welds - No
Non-Categorized Fatigue-Prone Details - No
Other (Specified in Text) - No

Special Emphasis Details:

No Special Emphasis Inspection Required.

General Notes To the Next Inspector:

access at north west side of both bridges and at south east side of both bridges.

Improvements Observed:

Inspection Date: 9/19/2012 RC: 33 BIN: 1072581

Review Progress and Personnel Present at Inspection

Carried: 481I 481I33012107 Crossed: TAFT ROAD CR 18 CheckValue: 1,806,117,476

Inspection Submission Status:

Submitted to QC Engineer on: 10/26/2012
QC Submission Number: 35322101

QC Review Completed: 11/7/2012
QC Engineer: James R. Manning

Submitted to Liaison Engineer on: 11/7/2012
Liaison Submission Number: 53235

Liaison Review Completed: 11/9/2012
Liaison Engineer: TODD M. HERMANN

Submitted for BIIS Processing on: 11/9/2012
BIIS Submission Number: .kp1

Current Status: Keypunched, Sent to BIIS
Check Value: 1,806,117,476

Personnel Present During Inspection:

Peter Riehlman - Team Leader
Rebecca Maurer - Assistant Team Leader

Inspection Date: 9/19/2012 RC: 33 BIN: 1072581

Inspection Access Requirements

Carried: 481I 481I33012107 Crossed: TAFT ROAD CR 18 CheckValue: 1,806,117,476

Equipment Required for Inspection

Access Requirement Changes WERE Noted During This Inspection.
This Listing is from the Inspection.

ACCESS CATEGORIES FOR ENTIRE BRIDGE
Required: Walking

ACCESS CATEGORIES FOR SPAN 1
Required: Walking

Inspection Date: 9/19/2012 RC: 33 BIN: 1072581

Culvert Measurements

Carried: 481I 481I33012107 Crossed: TAFT ROAD CR 18 CheckValue: 1,806,117,476

Culvert Measurements

NO CULVERT DATA FOR BIN 1072581

Standard Photos **RC: 33 BIN: 1072581**

Carried: 481I 481I33012107 Crossed: TAFT ROAD CR 18

1072581_LOCATION_MAP.JPG

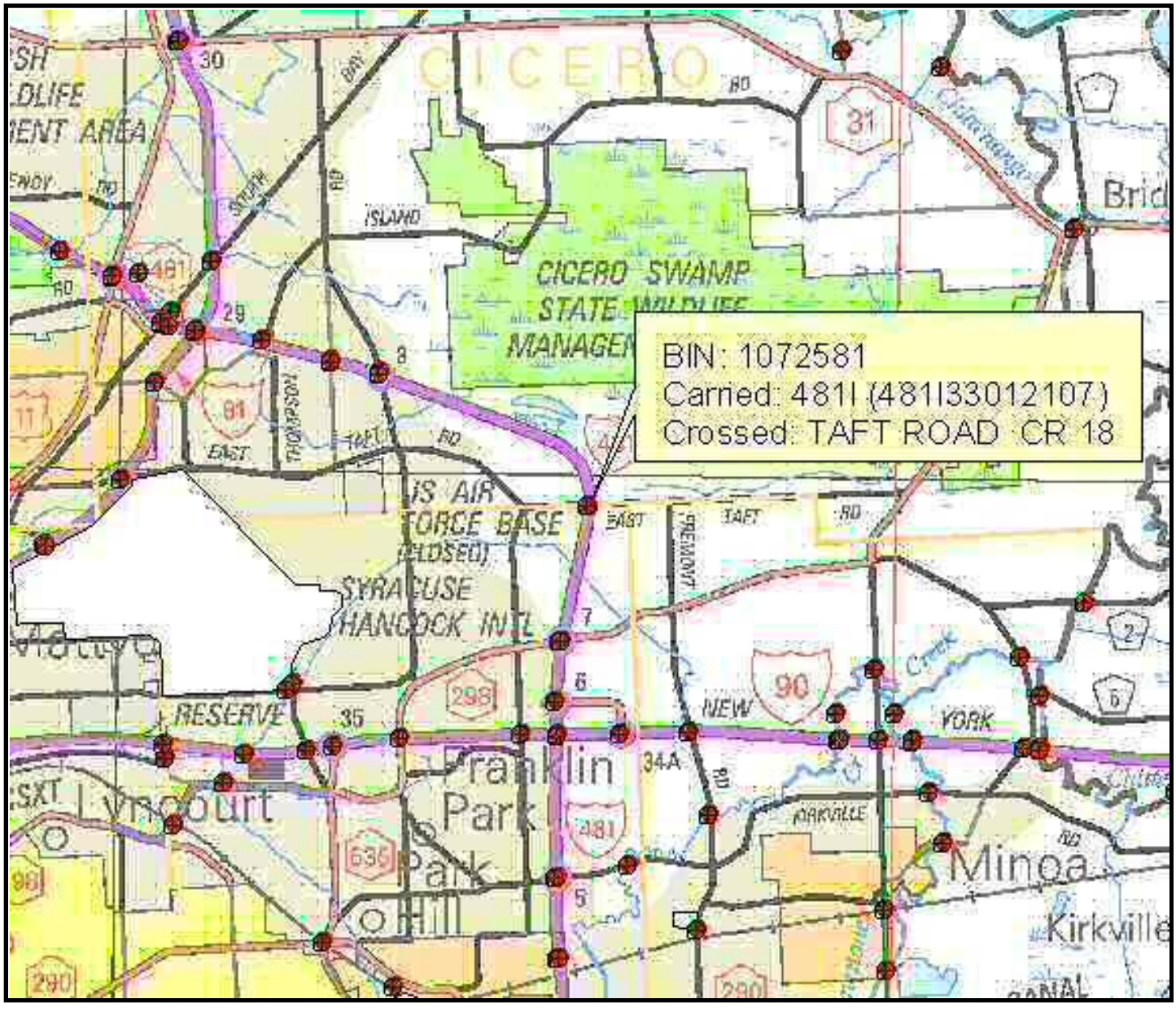

Standard Photos **RC: 33 BIN: 1072581**

Carried: 481I 481I33012107 Crossed: TAFT ROAD CR 18

1072581_QUAD_MAP.JPG

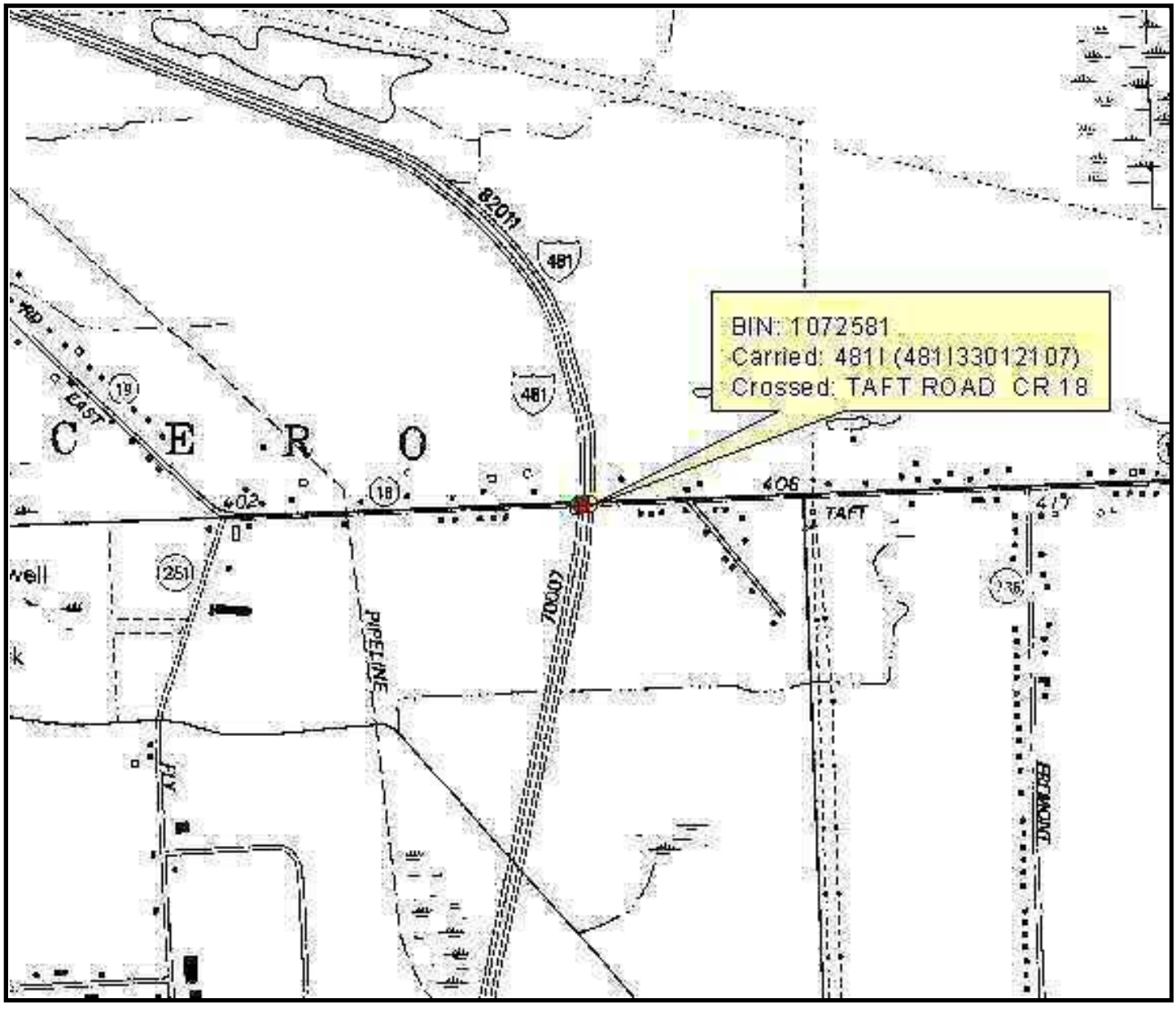

Standard Photos **RC: 33 BIN: 1072581**

Carried: 481I 481I33012107 Crossed: TAFT ROAD CR 18

AbutmentEnd.12.jpg



Standard Photos **RC: 33 BIN: 1072581**

Carried: 481I 481I33012107 Crossed: TAFT ROAD CR 18

ApproachBegin.12.jpg



Standard Photos **RC: 33 BIN: 1072581**

Carried: 481I 481I33012107 Crossed: TAFT ROAD CR 18

ApproachEnd.12.jpg



Standard Photos **RC: 33 BIN: 1072581**

Carried: 481I 481I33012107 Crossed: TAFT ROAD CR 18

ElevationSpan1.12.jpg

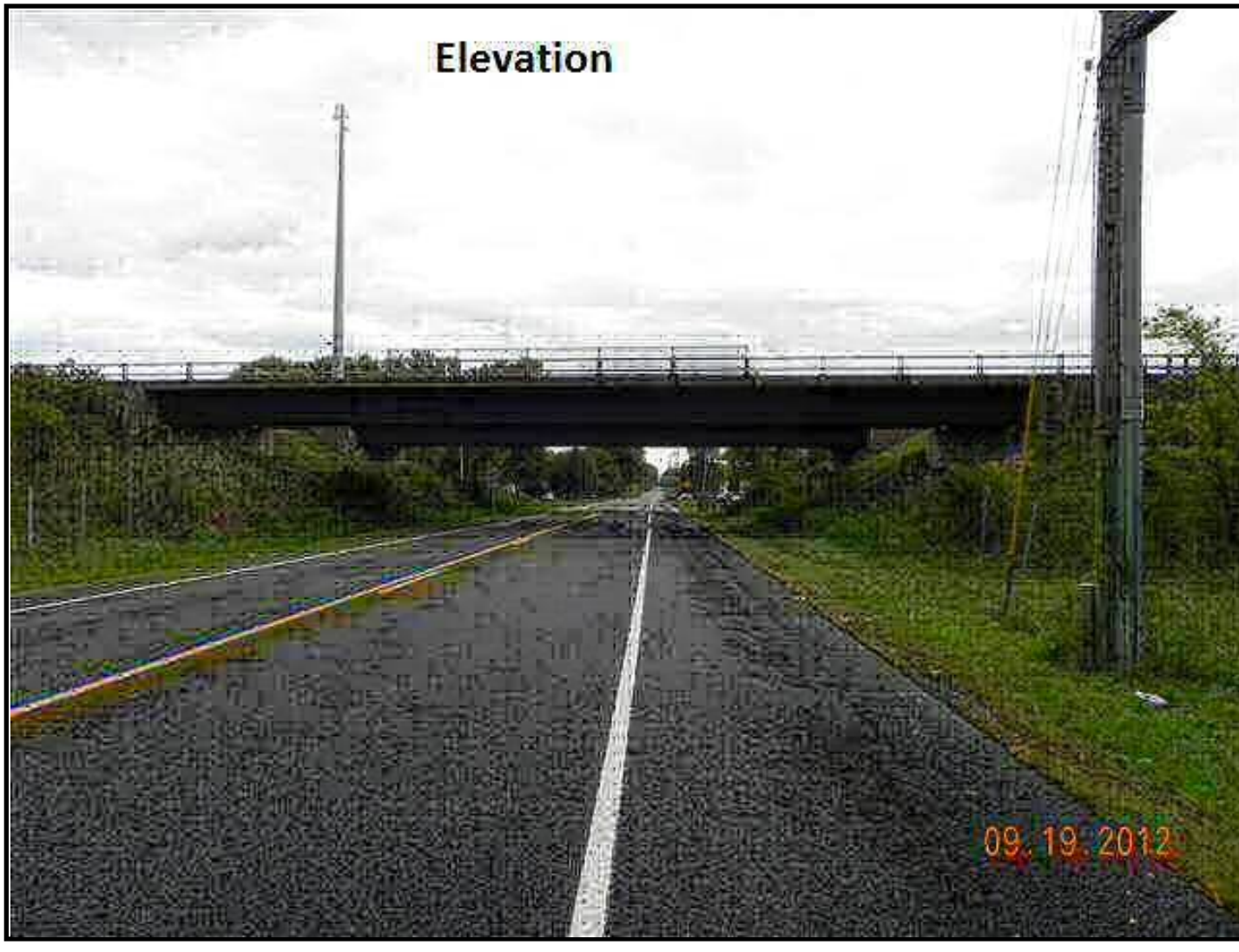

Standard Photos **RC: 33 BIN: 1072581**

Carried: 481I 481I33012107 Crossed: TAFT ROAD CR 18

F2CrossedSpan1Left.12.jpg

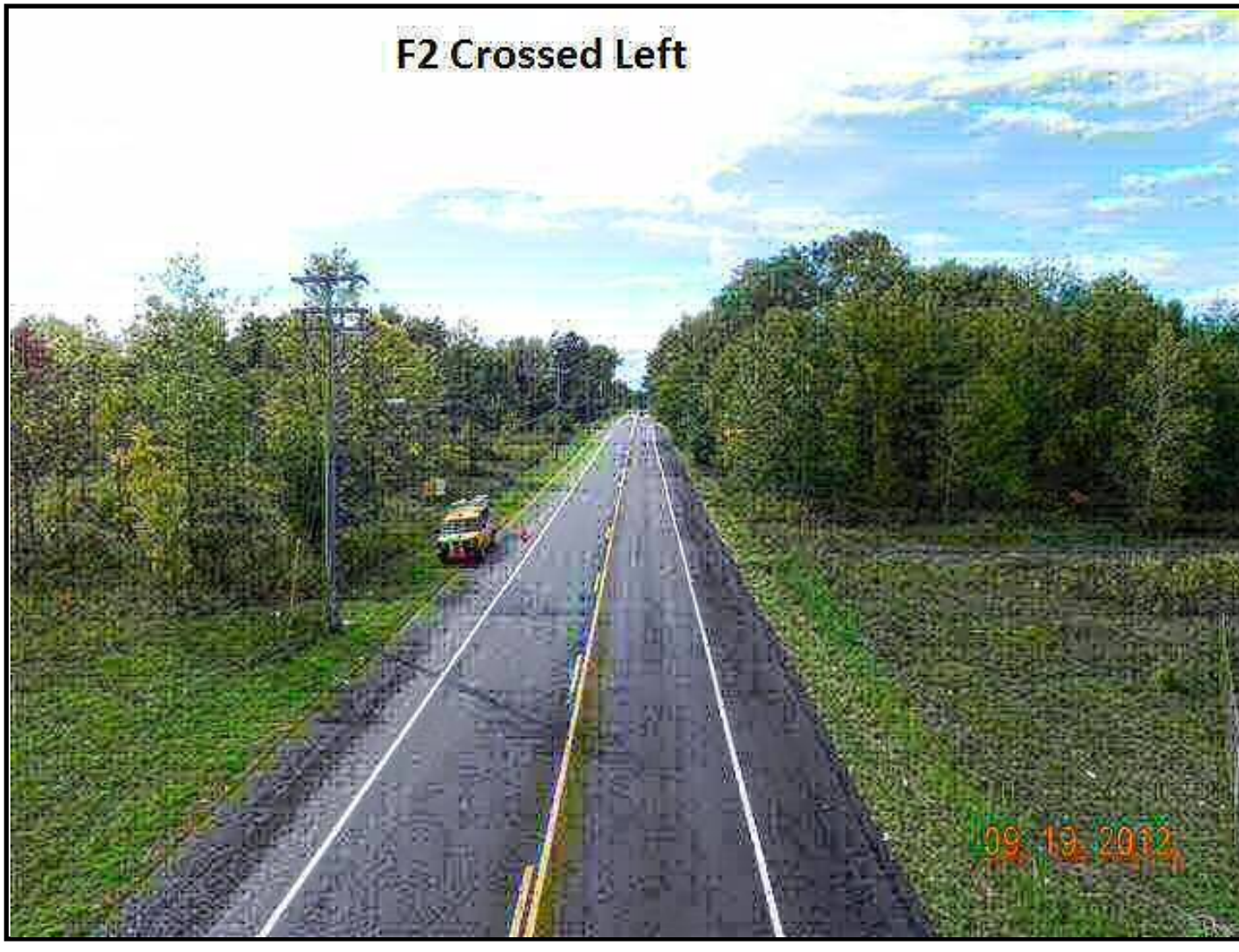

Standard Photos **RC: 33 BIN: 1072581**

Carried: 481I 481I33012107 Crossed: TAFT ROAD CR 18

F2CrossedSpan1Right.12.jpg



Standard Photos **RC: 33 BIN: 1072581**

Carried: 481I 481I33012107 Crossed: TAFT ROAD CR 18

FramingSpan1.12.jpg



LEVEL 1 LOAD RATING SUMMARY SHEET

Region/County Region 3/Onondaga BIN 1072581
Feature(s) Carried and Crossed I-481 SB/Taft Road
Date of field inspection upon which Level 1 rating is based 2/12/2014

OVERALL BRIDGE RATINGS (BASED ON LOWEST RATED ELEMENTS):

Total number of rating units 1

	H inventory	H operating	HS inventory	HS operating
Rating	H 29.69 (tons)	H 49.56 (tons)	HS 50.04 (tons)	HS 83.52 (tons)
Lowest rated element	Exterior Girder G5	Exterior Girder G5	Exterior Girder G5	Exterior Girder G5

Analysis method LFR Comments

Individual Rating Unit Level 1 values:

Rating unit span(s) 1

Main member ratings

	H inventory	H operating	HS inventory	HS operating
Rating	H (tons)	H (tons)	HS (tons)	HS (tons)
Lowest rated element				

Analysis method Comments

Floorbeam ratings

	H inventory	H operating	HS inventory	HS operating
Rating	H (tons)	H (tons)	HS (tons)	HS (tons)
Lowest rated element				

Analysis method Comments

Stringer ratings

	H inventory	H operating	HS inventory	HS operating
Rating	H 29.69 (tons)	H 49.56 (tons)	HS 50.04 (tons)	HS 83.52 (tons)
Lowest rated element	Exterior Girder G5	Exterior Girder G5	Exterior Girder G5	Exterior Girder G5

Analysis method LFR Comments

Certified by Date

Quality Control Engineer Signature Date
Agency or Company represented by certifier

Note:
-If connection ratings govern, record them under stringer ratings for stringer – floorbeam connection, floorbeam ratings for floorbeam-main member connections, etc.
-When Level 1 results indicated the need for load posting or other corrective action, the NYSDOT Regional Structures Engineer shall be notified immediately.
-Load ratings should be filed in the regional office within 60 days of completion of calculations.
-Bridges shall be flagged based on Level I results in accordance with the current NYSDOT flagging procedure.
-Bridge load posting, closure, etc. determinations shall be made as results are being produced.

PARSONS

100 Broadway
New York, NY 10005
Phone: 212-266-8300
Fax: 212-571-6825
www.parsons.com

TECHNICAL MEMORANDUM

FROM: Kian Siang Chau, P.E
NYSPE 082744

DATE: MARCH 20, 2014

RE: SEISMIC SCREENING SUMMARY
NEW YORK STATE DEPARTMENT OF TRANSPORTATION
D031085; PIN 3501.60; I-81

BIN: 1072581 (I-481 SB / Taft Rd)

This memorandum summarizes the seismic screening conducted for BIN 1072581 as part of the Interstate 81 Project in Syracuse, NY. The purpose of the screening is to determine if seismic retrofits are warranted at the superstructure to substructure connection, and if further seismic evaluation of the structure is required. This memorandum will give the screening results, retrofits required and recommendations for further seismic evaluation of the structure.

SCREENING PROCEDURE

The seismic screening was performed in accordance with the FHWA Seismic Retrofitting Manual for Highway Structures: Part 1 - Bridges, January 2006. As per the referenced manual, seismic screenings were performed for both lower level and upper level earthquake ground motion. The lower level earthquake ground motion has a reasonable likelihood of occurrence within the life of the bridge (50% probability of exceedance within a 75 year bridge life). The upper level earthquake ground motion has a finite likelihood of occurrence within the life of the bridge (7% probability of exceedance within a 75 year bridge life).

Values for the spectral acceleration for the Syracuse area used in the screening are as follows:

- Lower Level Earthquake Ground Motion for a Short Period (0.2 seconds): $S_S = 0.0251$
- Lower Level Earthquake Ground Motion for a Long Period (1.0 seconds): $S_1 = 0.0076$
- Upper Level Earthquake Ground Motion for a Short Period (0.2 seconds): $S_S = 0.139$
- Upper Level Earthquake Ground Motion for a Long Period (1.0 seconds): $S_1 = 0.047$

These values are considered constant and are the same for all seismic screenings of bridges in the Syracuse area.

The Site Class is based on the soil conditions at the bridge location. It was determined that this parameter has little effect on the results of the seismic screening because the spectral acceleration values for the Syracuse area are small. Based on this, a site class of D was used for all seismic screenings of bridges in the Syracuse area.

Bridge parameters used in the seismic screening were retrieved from the record drawings and WinBolts data.

The seismic screening takes into account the anticipated service life, importance, and the seismic exposure of the bridge to determine a seismic retrofit category (SRC). The SRC is then used to determine seismic evaluation methods and retrofit measures. There are four SRCs, A through D. Seismic retrofit category A is the lowest category; bridges in this category do not require retrofits or further seismic evaluation. Seismic retrofit category D is the highest category; bridges in this category requiring the most rigorous seismic evaluations and retrofits.

SCREENING RESULTS

The SRC for the bridge is "**C**" for lower level earthquake ground motion and "**B**" for upper level earthquake ground motion.

RETROFITS REQUIRED

No seismic retrofits are required for the bridge superstructure to substructure connection.

RECOMMENDATIONS FOR FURTHER SEISMIC EVALUATION

No further seismic evaluation is required for lower level earthquake ground motion. For the upper level earthquake ground motion, it is recommended that the capacities of the bearings are checked as per Section 5.2 of the referenced manual.

Retrofit cost estimates will be provided after any further required seismic evaluations are completed.

BRIDGE DECK EVALUATION REPORT

RECOMMENDATIONS

The bridge deck inspection findings and evaluation are used as a tool for developing the scope of work and cost estimates for the development and comparison of alternatives for the overall project.

The total damaged area of the deck is 1.9% of the total deck surface area. The cores indicate the reinforcement steel is 2.75 inches below the surface of the deck. The lab test indicates that chloride ion concentrations at all the sample locations are significantly higher than the corrosion threshold for steel.

Due to the age, condition and high chloride ion content of the bridge deck concrete, the bridge deck should be rehabilitated or replaced to meet the current standards and to mitigate excessive future maintenance costs.

ALTERNATIVES

- Rehabilitation Alternative - 3 inches Bonded Concrete Overlay
  - Scope

    The scope of this alternative will include the complete removal of the bridge railings, curb and safety walks, and fascias to the level of the original top of the deck. The joint will be removed. The top 2 inches of the entire deck will be removed and areas of deteriorated concrete must be removed to at least 1 inch below the level of the reinforcement steel and to the horizontal and vertical limit of any detectable hollow areas. Additionally, any further areas of deteriorated concrete detected will require full depth removal. Any corrosion of the reinforcement steel will be removed by sandblasting or hydro-blasting. The proposed deck overlay will be a 3 inches thick bonded concrete overlay yielding a nominal 9.5 inches standard thickness deck. A new single-sloped concrete barrier and a new armorless joint will be installed. The Level 1 Load Rating for the final condition was found to be acceptable.

- Useful Life Expectancy

  The removal of the top 2 inches of the existing deck will remove a portion of the deck with high chloride ion concentrations. It can be anticipated that chloride ions will continue to migrate into the remaining deck to the reinforcing steel resulting in further corrosion-related deterioration of the deck surface. Concrete admixtures will be included in the bonded concrete overlay to impede the continued penetration of chloride into the deck from the surface. This alternative will result in an extended useful life expectancy estimated at 20 years.

The design life of the project is 30 years (ETC + 30). This alternative does not meet the project objectives of obtaining 30 years of service life and is not evaluated further.

- Rehabilitation Alternative – 100% Deep Removal and Partial Deck Reconstruction
  - Scope

    The scope of this alternative will include the complete removal of the bridge railings, curb and safety walks, and fascias to the level of the original top of the deck. The joint will be removed. The scope of this alternative will include partial depth reconstruction with removal of the concrete to at least 1 inch below the top mat of the reinforcement steel. Additionally, any further areas of deteriorated concrete detected will require full depth removal. Any corrosion of the reinforcement steel will be removed by sandblasting or hydro-blasting. Due to the condition of the deck, full depth removal is not likely and not included in the cost estimate. The proposed deck partial reconstruction will be a nominal 5.75 inches thick concrete deck yielding a 9.5 inches standard thickness deck. A new single-sloped concrete barrier and a new armorless joint will be installed. The Level 1 Load Rating for the final condition was found to be acceptable.
  - Useful Life Expectancy

    This alternative will provide a useful life expectancy is estimated at 35 years.
  - Cost Estimate

    The estimated cost for this alternative is $415,000. The Engineer's Opinion of Probable Construction Cost worksheet is at the end of this section.

- Replacement Alternative – Cast-In-Place Concrete
  - Scope

    This scope of this alternative will include the complete demolition of the existing bridge deck, bridge railings, curb and safety walks, fascias and bridge joint. The bridge deck will be replaced with a new 9.5 inches standard thickness concrete deck. A new single-sloped concrete barrier and a new armorless joint will be installed. The Level 1 Load Rating for the final condition was found to be acceptable.
  - Useful Life Expectancy

    This alternative will provide a useful life expectancy is estimated at 40+ years.
  - Cost Estimate

    The estimated cost for this alternative is $567,000. The Engineer's Opinion of Probable Construction Cost worksheet is at the end of this section.

- Replacement Alternative – Pre-cast Concrete Deck Panels
  - Scope

    The scope of this alternative is similar to the Cast-In-Place Concrete Deck Replacement Alternative except the deck structure will be precast panels. This alternative offers reduced construction time over conventional construction.
  - Useful Life Expectancy

    This alternative will provide a useful life expectancy is estimated at 40+ years.
  - Cost Estimate

    The comparison of accelerated construction to conventional construction is beyond the current scope of this evaluation.

IN-DEPTH INSPECTION REPORT

D031085 P.I.N. 3501.60

ELEMENT SPECIFIC BRIDGE WORK

B.I.N. 1072582

TEAM LEADER Andrew P. Thompson 84914
NYSPE LICENSE #

ASSISTANT TEAM LEADER Mike Savino

FEATURE CARRIED I-481 Northbound

FEATURE CROSSED Taft Road

DATE FIELD WORK BEGAN 12/12/13

DATE FIELD WORK COMPLETED 2/13/14

TABLE OF CONTENTS

- STRUCTURE IDENTIFICATION
- INTRODUCTION
- PROJECT LOCATION MAP
- IN-DEPTH CONDITION DOCUMENTATION
- PLANS & SKETCHES
- IN-DEPTH PHOTO DOCUMENTATION
- ASBESTOS SAMPLING SURVEY
- LATEST BIENNIAL INSPECTION REPORT

STRUCTURE IDENTIFICATION

a. Bridge Identification Number (BIN): 1072582
b. Reference Marker: 481I 3301 2107
c. Region: NYSDOT Region 3
d. County: Onondaga
e. Town: Dewitt
f. Feature Carried: I-481 Northbound
g. Feature Crossed: Taft Rd. (CR 18)

INTRODUCTION

a. Bridge History
   i. Year Built: 1985
   ii. Bridge Type: Single Span, Steel Multi-girder
   iii. Span Length: 122 feet
   iv. Out-to-Out Width: 42 feet
   v. Structural Ratings and Rankings
      1. Federal Sufficiency: 97.4 (September 2012)
      2. Condition Rating: 5.547 (September 2012)
      3. General Recommendation: 6
   vi. Live Load Posting (HS25): No
   vii. National Highway System (NHS): Yes
   viii. Previous work Done: Waterproof bridge deck (1999). Joint replacement and misc. concrete repairs (2004). Repair deck (2007, 2008).
   ix. Planned Future Work: N/A
b. Highway Classification
   i. Functional Classification: Urban Principle Arterial - Interstate
   ii. Traffic Volumes

YEAR	AADT Projected
2014	14753
2034	21922
2054	32575

   iii. Plan for Maintenance and Protection of Traffic:
   Maintenance and Protection of traffic will be achieved by staged construction.

PROJECT LOCATION MAP



IN-DEPTH CONDITION DOCUMENTATION

NYS DEPT. OF TRANSPORTATION BRIDGE

BIN 1072582

SHEET: 1 OF 4

DATE: 2/13/2014

FEATURE CARRIED: I-481 NB
FEATURE CROSSED: TAFT RD

TEAM LEADER: A.THOMPSON

A. TEAM LEADER: M. SAVINO

ITEM	REMARKS	PHOTO N0.
TP 349-22	Begin Abutment - Joint with Deck: This is the expansion end. Active leakage and rust staining was noted below (Photos 2 and 3). The seal and headers appeared in good condition from above (Photo 1).	1-3
TP 349-26	Begin Abutment - Seats and Pedestals: There is map cracking on the right face of Pedestal 1 (Photo 3) and a 1/16” horizontal crack on the right face of Pedestal 3 (Photo 4). These areas did not sound hollow. The remainder of the seats and pedestals are in good condition.	3,4
TP 349-27	End Abutment - Seats and Pedestals: The front face of Pedestal 5 sounds hollow for a 2’ wide x full height area (Photo 5). The top face is hollow for the begin 7” with a 3/8” wide crack extending from the masonry plate to the right corner. The remainder of the seats and pedestals are in good condition.	5
TP 349-28	Begin Abutment - Backwall: The backwall has a 5" wide x 3” high x 1.5" deep spall at the top behind Girder 1 (Photo 6). The remainder has vertical hairline cracking and moderate rust staining mostly at the ends (Photos 2 and 7).	2,6,7
TP 349-30	Begin Abutment – Stem There are (3) hollow areas in the lower stem face under Girder Bay 4 totaling 5.75 sf (Photos 8 and 9). The remainder of the stem has areas of patching with no hollowness.	8,9
TP 349-31	End Abutment – Stem There is one 3 sf hollow area just to the left of Pedestal 1 at the bottom (Photos 10 and 11). The remainder of the stem has areas of light cracking with no hollowness.	10,11
TP 350-20	Deck Elements - Curbs: One curb section on the left is displaced toward the roadway 1" at its end but seems stable (Photo 12). The location is 76' from the begin. The remainder of the left curb and the entire right curb is in good condition with some areas of missing grout. The 2012 Biennial Inspection Report rated the Curbs item 4 due to debris build-up and ponding along the approach curbs. Approach condition is outside the scope of this project.	12
TP 350-21	Sidewalks/Fascias: Sidewalks: Snow covered the curbs and safety walks at the time of the inspection. The snow was cleared at the begin and end and at a few locations along the span. The left safety walk had map cracking where visible, but no hollow sounding areas were found (Photo 13). No map cracking was found where the snow was cleared on the right safety walk.	13

ITEM	REMARKS	PHOTO N0.
TP 350-21	Fascias: Both fascias have map cracking throughout the span (Photo 14). The map cracking is worse under the rail posts. There are +/-2.5' long hairline to 1/16" wide longitudinal cracks under the rail posts at the bottom chamfers on both sides. No spalling or hollow sounding areas were found on the vertical faces.	14
TP 350-22	Deck Elements - Railings/Parapets: The bridge railing and posts are in good condition. Snow fencing is present over the travel lanes on both sides of the bridge. The snow fence consists of 6 steel pipe posts (located at rail posts), steel pipe rails, and chain link fencing. On the right the bottom pipe rails at Posts 2 and 3 are rusted through and detached on the begin side. The bottom pipe rails at Post 4 are rusted through and detached on the begin and end side (Photo 15). On the left the bottom pipe rail at Post 5 is rusted through and detached on the begin side. The remainder of the bottom connections to snow fence Posts 2-5 on both sides have surface rust and section loss but are intact. The remainder of the snow fencing is in good condition.	15
TP 350-27	Superstructure - Structural Deck: The structural deck is an 8.5" thick concrete mono deck with SIP forms. The surface of the deck has several hollow areas and patches that range from good to fair condition (Photos 16 to 17). There is a 15' long x 5' wide patch near the begin in the right lane which has hollowness surrounding it and transverse hairline cracking throughout (Photo 18). There is also a 1' wide x 6" long x 1.5" deep spall adjacent to the patch on the end side. Overall, 12% of the deck is patched or damaged. See Deck Deterioration Plan. The deck has SIP forms, and the underside is exposed at the overhangs. There is a 2' long x 1' wide x 2" deep spall under the last snow fence post on the left (Photo 19). The rail post anchor bolt and anchor plate are partially exposed. There is a shallower adjacent spall measuring 1' long x 4" wide x ½" deep with no exposed rebar. The spalls both sound solid. Under the third last rail post on the left there is a 9" dia,. x 1" deep spall with an adjacent 1' x 6" hollow area (Photo 20). The remainder of both overhangs have hairline cracking at +/-6' spacing (Photo 21). The SIP forms are in good condition except for a 2' length missing 2' from the begin in Bay 4 (Photo 22). The exposed concrete at this location is in good condition.	16-22
TP 350-28	Superstructure - Primary Members The steel girders are in good condition with no significant section loss (Photos 23 and 24).	23,24

FEATURE CARRIED: I-481 NB
FEATURE CROSSED: TAFT RD

TEAM LEADER: A.THOMPSON
A. TEAM LEADER: M. SAVINO

ITEM	REMARKS	PHOTO N0.
TP 350-30	Superstructure - Paint: The girders are made of weathering steel and form a protective coating. Both fascia girders are losing their coating in the form of medium sized sheets on their bottom flange bottom faces for the outside half width (Photo 23). The fascia girders are similarly affected on the top inside face of the bottom flange and lower 3" of the web (Photo 24). This condition is worse over the end half of the span. The remainder of the steel on all of the girders has only minor peppering.	23,24

NYS DEPT. OF
TRANSPORTATION BRIDGE

BIN 1072582

SHEET: 4 OF 4
DATE: 2/13/2014

FEATURE CARRIED: I-481 NB
FEATURE CROSSED: TAFT RD

TEAM LEADER: A.THOMPSON
A. TEAM LEADER: M. SAVINO

ITEM	REMARKS	PHOTO N0.
	Special Emphasis Inspection Required Non-Redundant/Fracture Critical Members - No Pin and Hangers - No Fatigue-Prone Welds - No Non-Categorized Fatigue-Prone Details - No Other - No	

PLANS & SKETCHES

Upon 4/2/98 J. Mann Team Leader 3/20/98

P.I.N. 3

D250095

FED. RD. REG. NO.	STATE	FEDERAL AID PROJECT NO.	SHEET NO.	TO SH
	NEW YORK	I-481-2(182)	259	31

INTERSTATE ROUTE 481 EXTENSION
COLLAMER INTERCHANGE TO BEAR ROAD INTERCHANGE - ONONDAGA CO.

CAPITAL PROJECT IDENTIFICATION NO. 3107.00

3/28/94 Dan

INDEX OF DRAWINGS

DWG. NO.	DESCRIPTION
1	General Plan, Elevation, and Sections
2	General Profiles
3	Estimate of Quantities and Notes
4	Subsurface Profile
5	Embankment Plan and Sections
6	Drainage and Approach Details
7	Drainage and Approach Details
8	Br. 4(SB) So. Abut. Plan and Elevations
9	Br. 4(SB) So. Abut. Reinforcement Plans and Sections
10	Br. 4(SB) No. Abut. Plan and Elevations
11	Br. 4(SB) No. Abut. Reinforcement Plans
12	Br. 5(NB) So. Abut. Plan and Elevations
13	Br. 5(NB) So. Abut. Reinforcement Plans
14	Br. 5(NB) No. Abut. Plan and Elevations
15	Br. 5(NB) No. Abut. Reinforcement Plans
16	Br. 5(NB) Abutment Sections
17	Br. 4(SB) Transverse Section and Structural Slab
18	Br. 5(NB) Transverse Section and Structural Slab
19.	Girder Elevation and Framing Plans
20.	Camber, Haunch, Design Load, and Moment/Shear Tables
21.	Miscellaneous Superstructure Details
22.	Bearing Details
23.	Armored Joint Details
24.	Armored Joint Details
25.	Railing Details
26.	Approach Slab and Railing Layout
27.-30.	Bar Lists

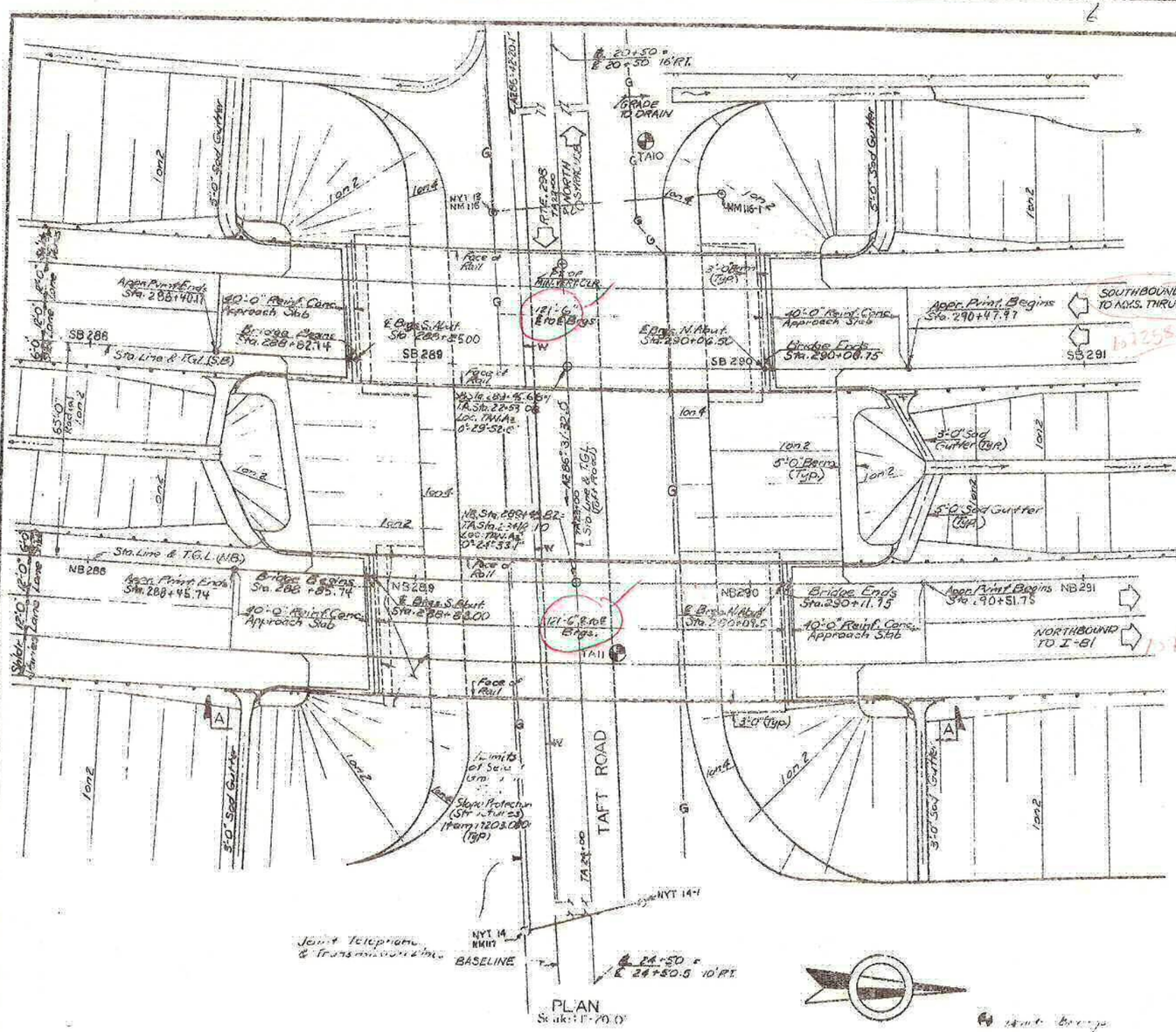

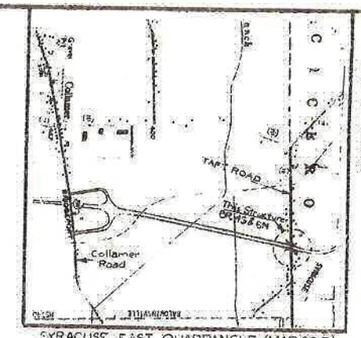

BRIDGE LOCATION MAP
Scale: 1"=2000'

CURVE DATA

CURVE SB-2		CURVE NB-2
SC	Sta 285+58.73 SB	SC Sta 285+25.66 NB
R	2799.79	R 2864.79
L_c	3758.294	L_c 3850.189
D_c	2°-02'-47.2"	D_c 2°-00'-00.6"

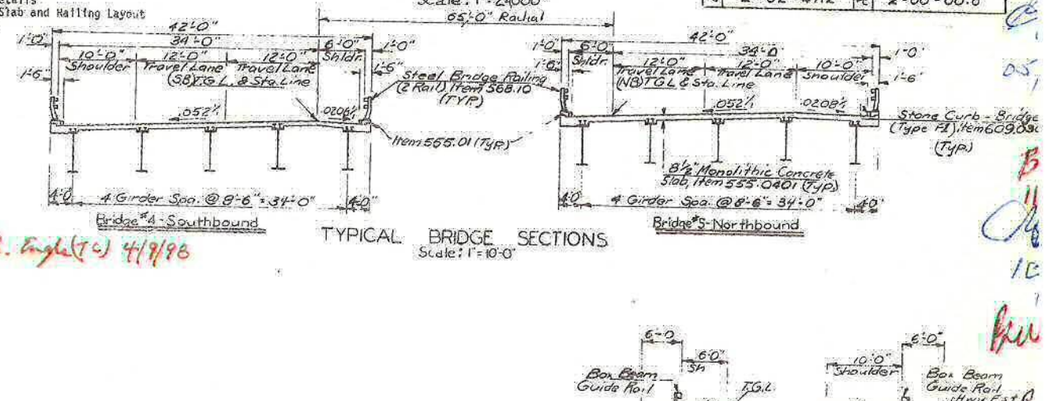

TYPICAL BRIDGE SECTIONS
Scale: 1"=10'-0"

R. Engle (C) 4/9/98

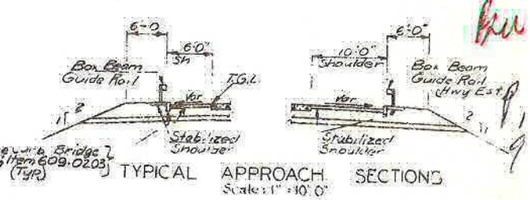

TYPICAL APPROACH SECTIONS
Scale: 1"=10'-0"

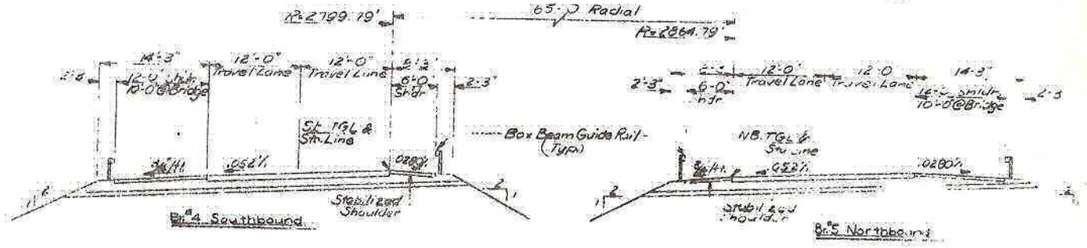

TYPICAL HIGHWAY SECTIONS
Scale: 1"=10'-0"

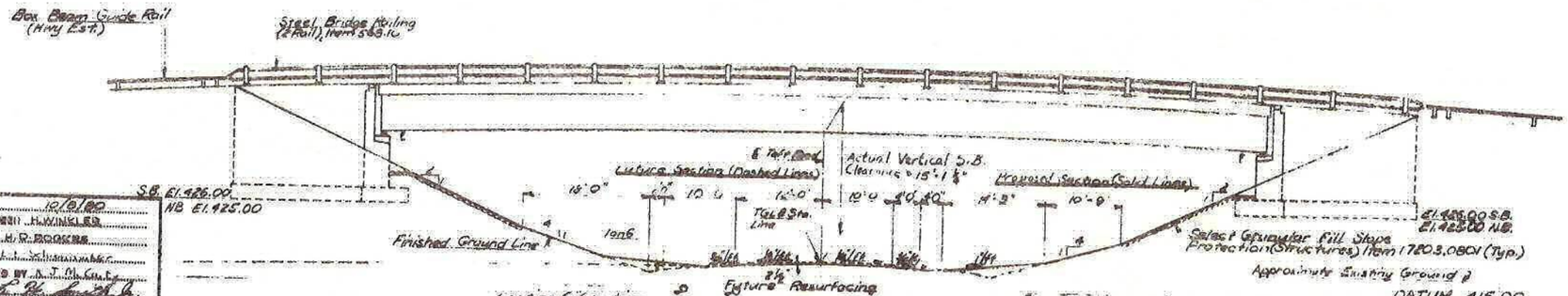

NOTE #1: Depths of Gas & Water Lines are approximate. No work is planned for these Utilities.

H-S LOADING

INVENTORY	OPERATING
HS 20 (36 T) (W3)	HS 42 (75 T) (W5)

"(WS)" = WORKING STRESS

BIN	NUMBERS
Bridge 4 (SB) (2288+82.14)	Bridge 5 (NB) (2288+85.74)

STATE OF NEW YORK
DEPARTMENT OF TRANSPORTATION
DIVISION OF CONSTRUCTION

INTERSTATE ROUTE 481
BRIDGES NO. 4(SB) & 5(NB)
OVER TAFT ROAD

DATE MADE 10/2/92
PROJECT ENGINEER H. WINKLER
IN CHARGE OF H. R. BROOKS
DESIGNED BY [illegible]
DESIGN CHECKED BY D. J. Massmillan
DETAILED BY [illegible]
FINAL CHECKING BY E. E. [illegible]

D. J. MASSMILLAN DATE
PLAN RECOMMENDED BY

107
D250

FED RD REG NO.	STATE	FEDERAL AID PROJECT NO	SHEET NO
	NEW YORK	I-481-2(152)	275

INTERSTATE RTE. 573 EXTENSION (I-481)
COLLAMER INTERCHANGE TO NORTHERN BLVD.
ONONDAGA COUNTY

CAPITAL PROJECT IDENTIFICATION NO. 3107.06

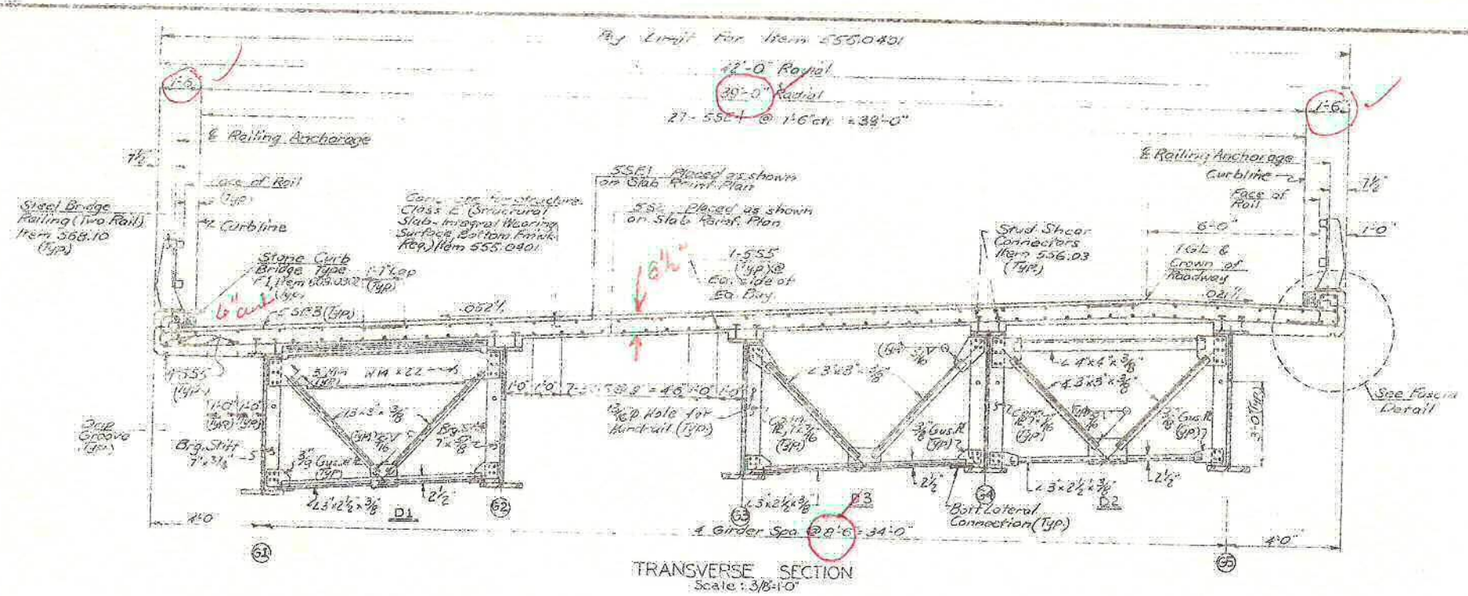

TRANSVERSE SECTION
Scale: 3/8"=1'-0"

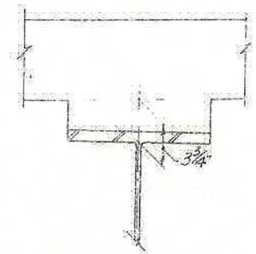

HAUNCH DETAIL
Scale: 1½"=1'-0"

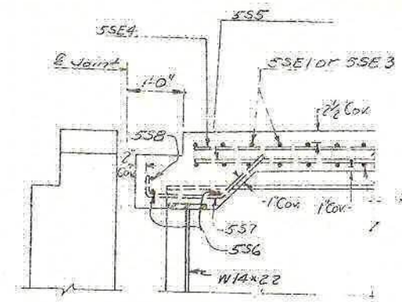

SLAB HAUNCH REINF. DETAIL
Not To Scale



WEST BRUSH CURB OVERLAY
Scale: 1/8"=1'-0" Horiz.
1/4"=1'-0" Vert.

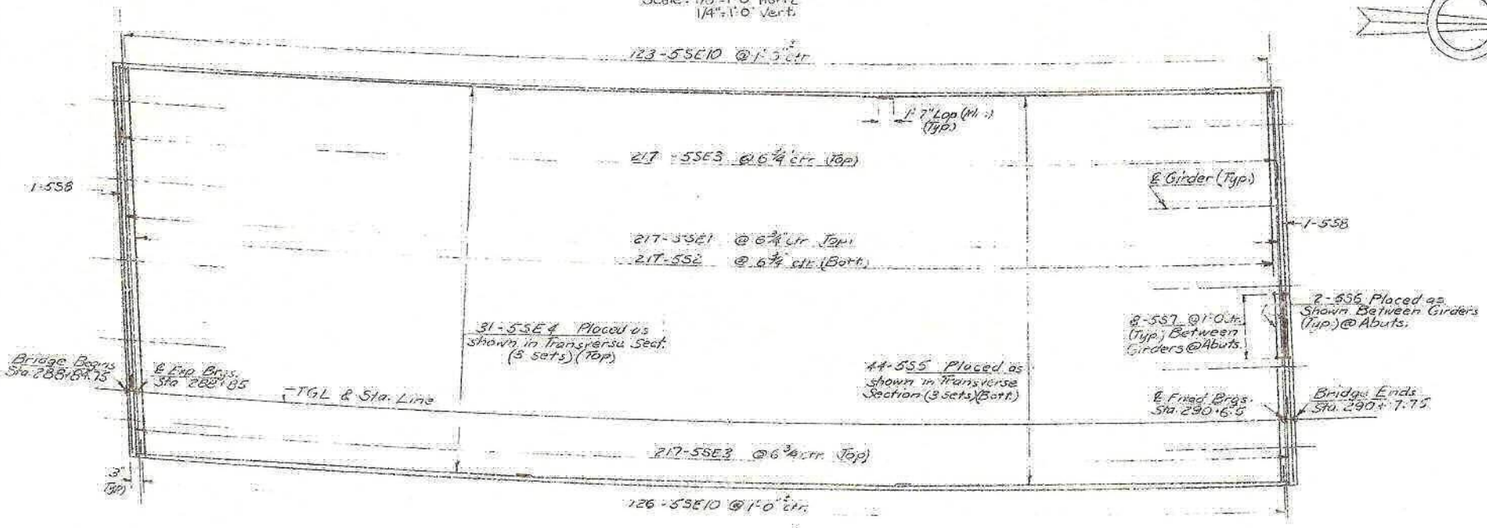

SLAB REINF. PLAN
Scale: 1/8"=1'-0" Horiz.
1/4"=1'-0" Vert.

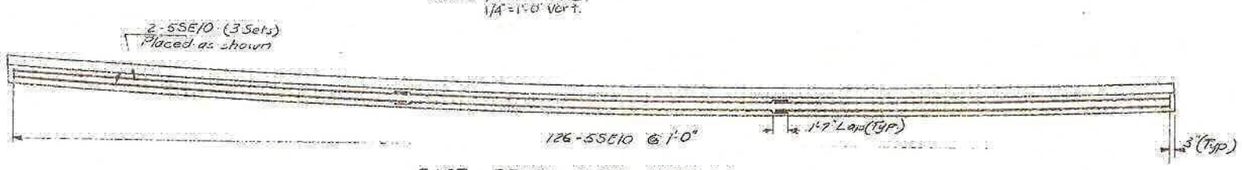

EAST BRUSH CURB OVERLAY
Scale: 1/8"=1'-0" Horiz.
1/4"=1'-0" Vert.

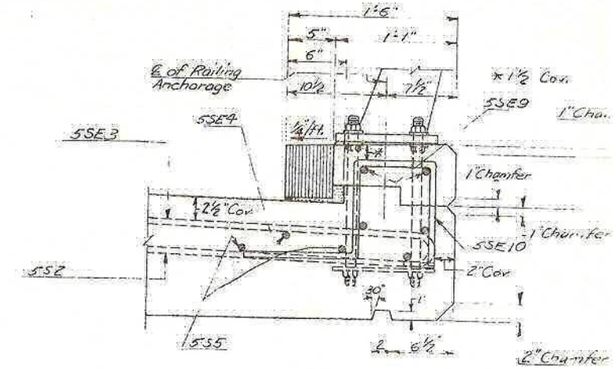

FASCIA DETAIL
Scale: 1½"=1'-0"

555.04

Concrete Table		
Br 4 (SB)	Item 555.01	Item 555.02
Slab	—	5196 SF
East Brush Curb	2.25 CY	—
West Brush Curb	2.23 CY	—

Notes:

1. For Framing Plan and Girder Details, see Dwg 19.
2. For Joint Details, see Dwgs 23 & 24.
3. For Railing Details, see Dwg. 25.
4. For Railing Layout, see Dwg. 26
5. For Details of Stay-In-Place Forms, see Dwg 27.
6. For Safety Handrail Details, see Dwg. 21.
7. For Curb Details, see Dwg 18.

STATE OF NEW YORK
DEPARTMENT OF TRANSPORTATION
DIVISION OF DESIGN AND CONSTRUCTION

INTERSTATE ROUTE 481

BRIDGES 4(SB) & 5(NB)

OVER TAFT ROAD

Br. 4 (SB) Transverse Section and Structural Slab

PROJ. ENG. H. WINKLER | DATE MADE 9/23/81

DESIGNED BY [illegible] DETAILED BY [illegible]
DESIGN CHECKED BY [illegible] DETAIL CHECKED BY [illegible]

88 178 11-78 POLYTRACE 040

10725

D2500

FED. RD. REG. NO.	STATE	FEDERAL AID PROJECT NO.	SHEET NO.	T SH
	NEW YORK	I-481-2(152)	277	3

INTERSTATE RTE. 571 EXTENSION (I-481)
COLLAMER INTERCHANGE TO NORTHERN BLVD.
ONONDAGA COUNTY

CAPITAL PROJECT IDENTIFICATION NO. 3107.00

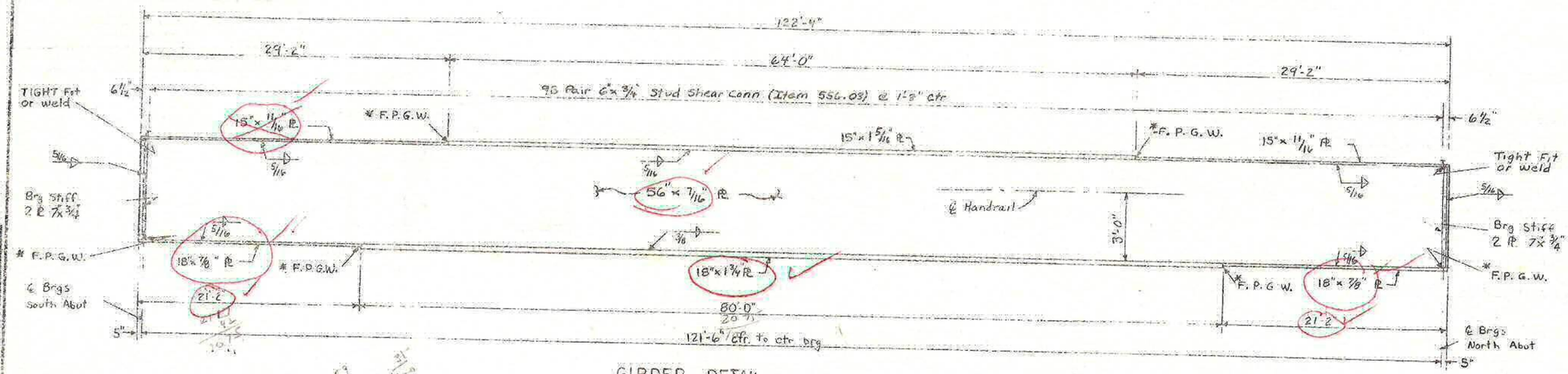

GIRDER DETAIL
Scale: Vert 3/8" = 1'-0"
Horiz 3/16" = 1'-0"

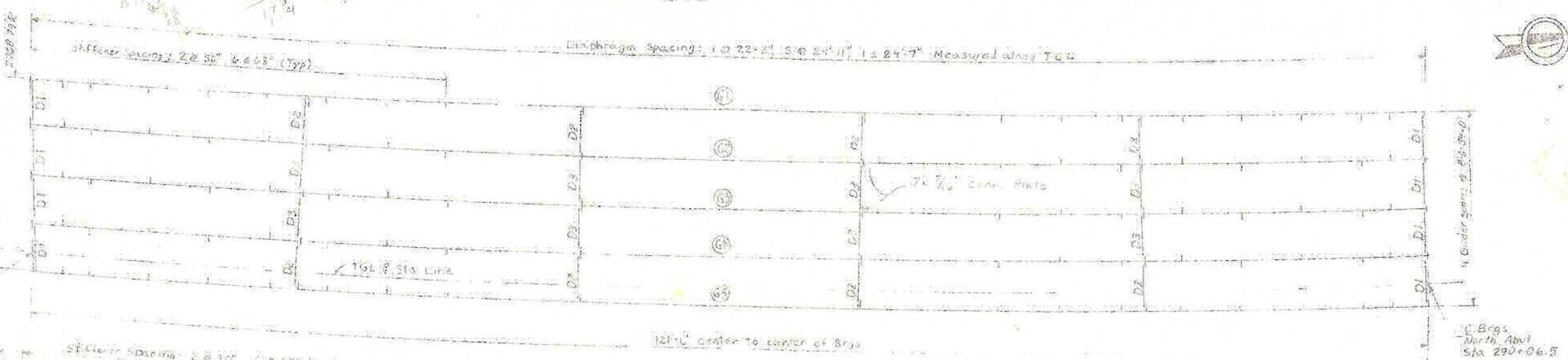

FRAMING PLAN (Bridge 4 S.B.)
Scale: Vert. 3/32" = 1'-0"
Horiz. 3/16" = 1'-0"

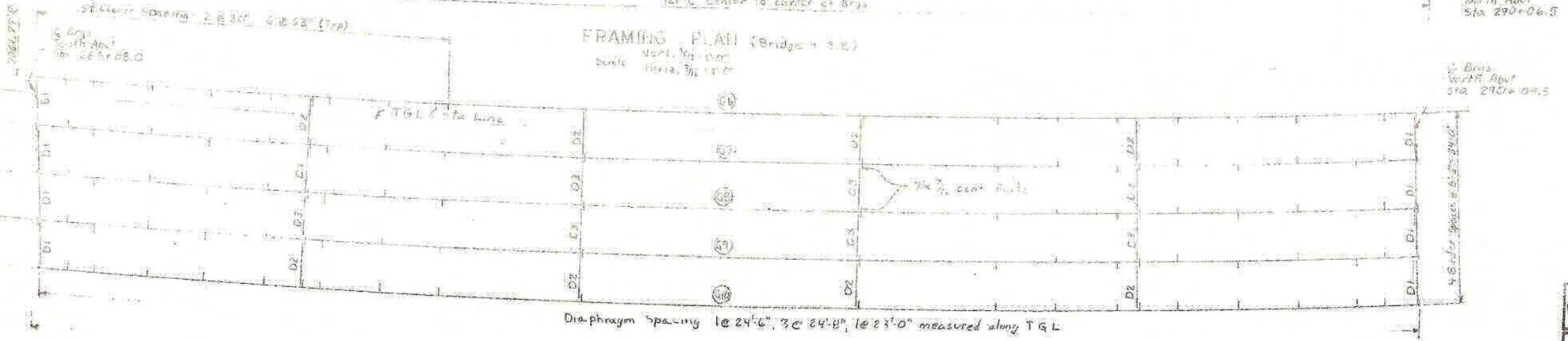

FRAMING PLAN (Bridge 5 N.P.)
Scale: Vert. 3/32" = 1'-0"
Horiz 3/16" = 1'-0"

Notes:
1. * F.P.G.W. = Full Penetration Groove
2. End diaphragms placed along ℄ Brg Intermediate Diaphragms placed radia
3. All structural steel shall conform to ASTM A-588, unpainted
4. For Diaphragm Details see Dwgs 1
5. For Girder Sections and Tables see Dwg 20
6. For Stud Shear Connector Details, Sat Handrail Details and Flange Taper Details, see Dwg 21
7. The ends of all girders and their be stiffner plates shall be vertical. All connection PL's may be perpendicular to the top flange PL.

STATE OF NEW YORK
DEPARTMENT OF TRANSPORTATION
DIVISION OF DESIGN AND CONSTRUCTION

INTERSTATE ROUTE 481
BRIDGES 4(SB) & 5(NB)
OVER TAFT ROAD

Girder Elevation and Framing Plans

PROJ. ENG.

DESIGNED BY E.E. Schoenmaker
DESIGN CHECKED BY
DETAILED BY
DETAIL CHECKED BY

SD 173a (7/80)

3/3 1072582

D259214

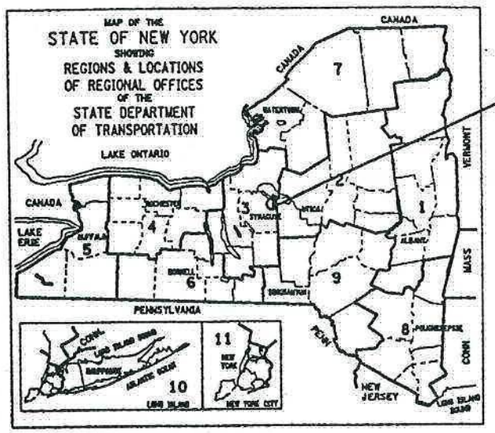

PROJECT LOCATION

STATE OF NEW YORK
DEPARTMENT OF TRANSPORTATION
OFFICE OF ENGINEERING

BRIDGE REHABILITATION PROJECT (ELEMENT SPECIFIC)
VARIOUS BRIDGES ON INTERSTATE 481
TOWNS OF DEWITT AND CICERO

VOLUME 1 OF 2

432 SHEETS ONONDAGA COUNTY CONTRACT D259214

F.A. PROJECT

STANDARD SHEETS

M203-4, M203-5, M203-6R1, M603-1
M606-32, M606-33, M606-34,
M619-3R1, M619-4, M619-5
M685-1, M685-2R1, M685-3R1
M685-4R1, M685-5R1, M403-1, M203-4,
M203-5, M203-6R1, M603-1

B70 11/30/04
10/24/06
10/28/06
9/19/12

THIS IS A BRIDGE REHABILITATION PROJECT ON VARIOUS BRIDGES ON INTERSTATE 481, LOCATED IN THE TOWNS OF CICERO AND DEWITT IN ONONDAGA COUNTY. THIS WORK CONSISTS OF BRIDGE JOINTS, BEARINGS, BRIDGE RAIL AND CONCRETE REPAIR OF SUBSTRUCTURES. THERE ARE 28 BRIDGES IN THE PROJECT BEGINNING AT REFERENCE MARKER 481I-3301-1000 SOUTH OF THE CITY OF SYRACUSE AND ENDING AT REFERENCE MARKER 481I-3301-2143. I481 INTERCHANGE NORTH OF THE CITY.

ALL WORK CONTEMPLATED UNDER THIS CONTRACT IS TO BE COVERED BY AND IN CONFORMITY WITH THE STANDARD SPECIFICATIONS (METRIC UNITS) OF JANUARY 2, 2002, AS AMENDED BY ADDENDA NOS. 1 AND 2, EXCEPT AS MODIFIED ON THESE PLANS AND IN THE ITEMIZED PROPOSAL.

CONTRACTOR'S NAME _____
AWARD DATE _____
COMPLETION DATE _____
FINAL ACCEPTANCE DATE _____
REGIONAL DIRECTOR _____
ENGINEER IN CHARGE _____
FINAL COST TOTAL _____

FISCAL SHARE COST(S)

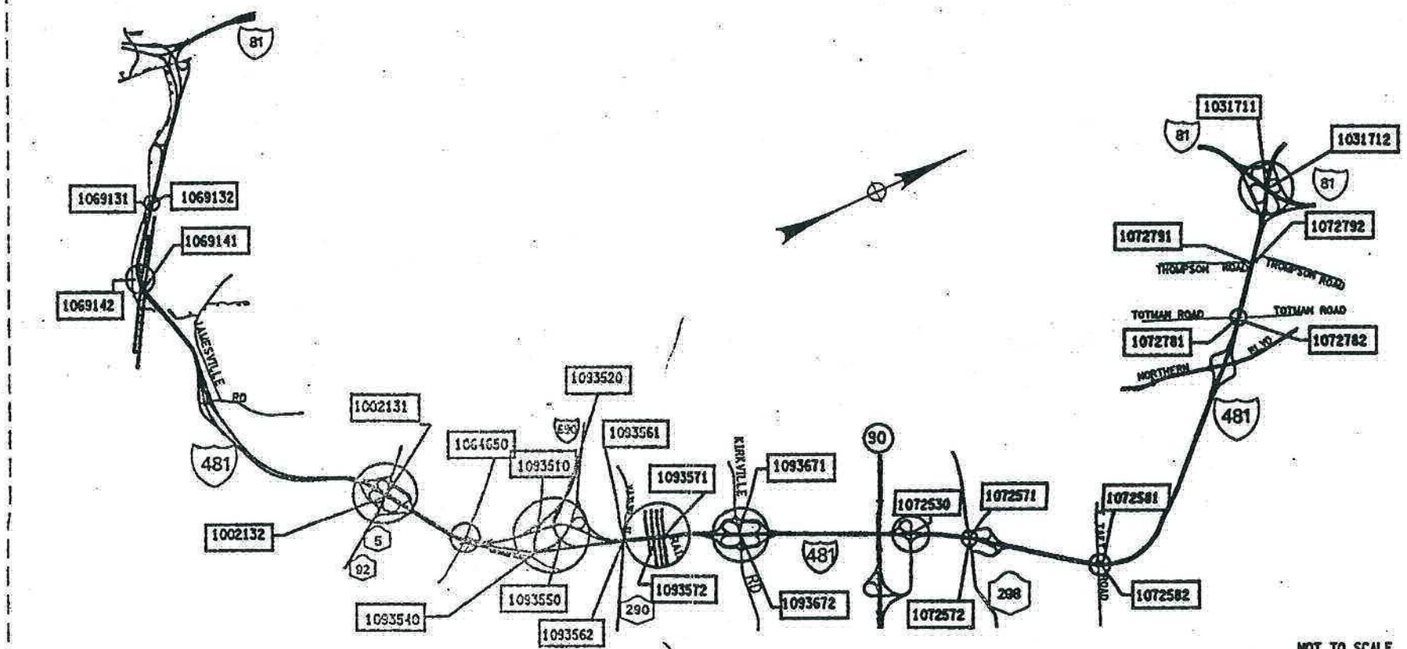

PROJECT LOCATION

BRIDGE REHAB. PROJ.- ELEMENT SPECIFIC			
VARIOUS BRIDGES ON INTERSTATE 481			
TOWNS OF DEWITT AND CICERO			
ONONDAGA COUNTY			
FED. ROAD REG. NO.	STATE	SHEET NO.	TOTAL SHEETS
1	N.Y.	1	432
FEDERAL AID PROJECT NO.			
CAPITAL PROJECT IDENTIFICATION NO. 3056.13			
INDEX ON SHEET NO. 5 & 6			

RECOMMENDED BY John E. Fietze 9/04/02 REGIONAL DESIGN ENGINEER DATE

RECOMMENDED BY Myron A. Shirley 9/4/02 REGIONAL CONSTRUCTION ENGINEER DATE

RECOMMENDED BY 9/04/02 REGIONAL TRANSPORTATION MAINTENANCE ENGINEER DATE

RECOMMENDED BY 9-4-02 REGIONAL TRAFFIC ENGINEER DATE

APPROVED BY 09-04-02 REGIONAL DIRECTOR DATE

DESIGN SUPERVISOR Clement JOB MANAGER Nick DeCirce DESIGNED BY CHECKED BY ESTIMATED BY DRAFTED BY CHECKED BY

FED ROAD REG. NO.	STATE	CONTRACT NO.	SHEET NO.	TOTAL SHEETS
1	N.Y.	D259214	258	432

BRIDGE REHABILITATION PROJECT (ELEMENT SPECIFIC)

VARIOUS BRIDGES ON INTERSTATE 481

TOWNS OF DEWITT AND CICERO

ONONDAGA COUNTY

P.I.N. 305613 | B.I.N. 1072582

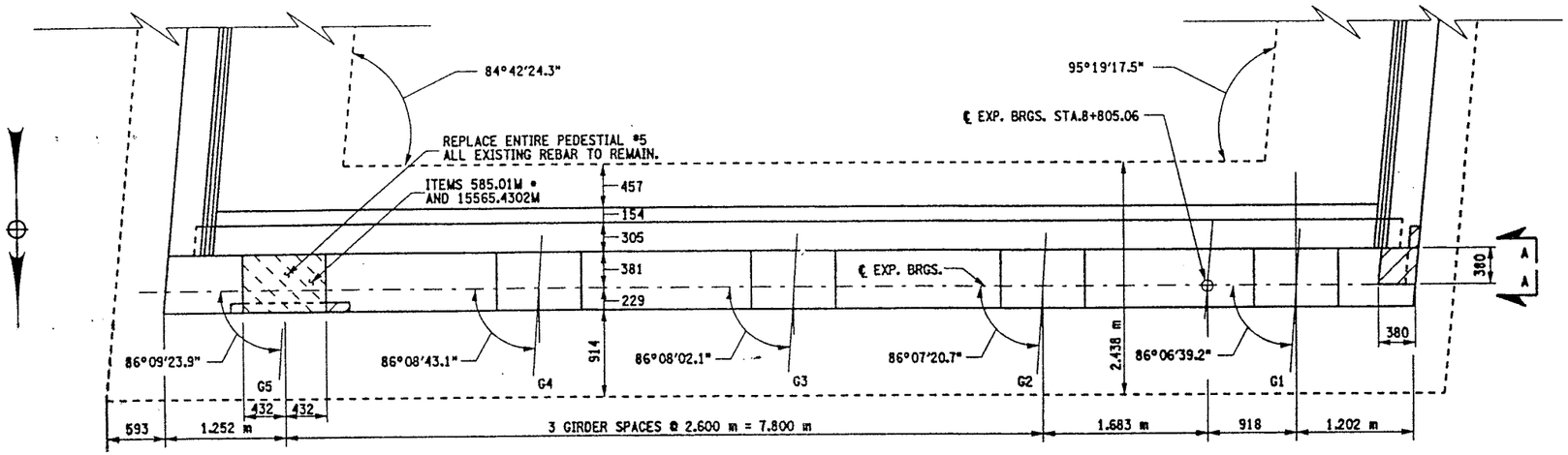

PLAN

SCALE 1:30

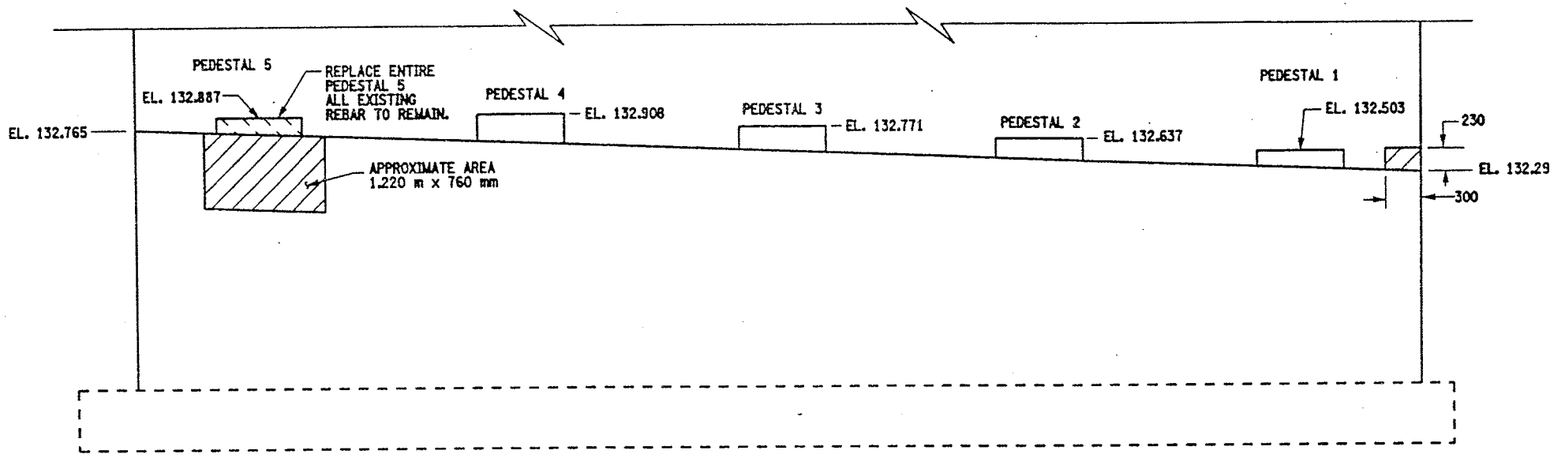

SOUTH ABUTMENT ELEVATION

SCALE 1:30

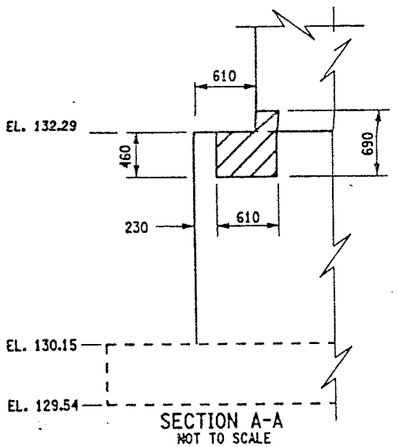

SECTION A-A

NOT TO SCALE

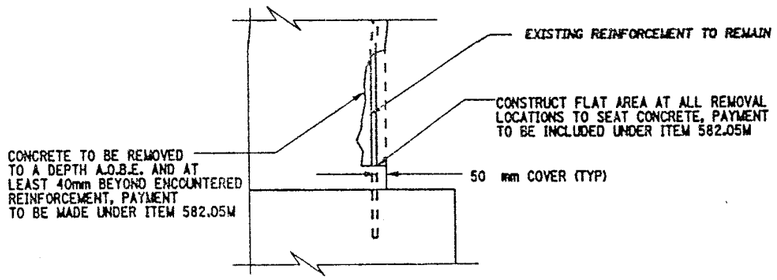

REMOVAL DETAIL

NOT TO SCALE

NOTES:

1. ALL DIMENSIONS SHOWN FOR CONCRETE REMOVAL ARE APPROXIMATE AND SHALL BE FIELD VERIFIED BY THE CONTRACTOR AND E.I.C.
2. REMOVE CONCRETE TO LIMITS SHOWN AS WELL AS TO SOUND CONCRETE, A.O.B.E.
3. WHEN REMOVING EXISTING CONCRETE, SAWCUT 5mm MIN. TO PRODUCE NEAT REMOVAL LINES. ANY COST TO BE INCLUDED IN THE BID PRICE FOR ITEM 582.05 M
4. ALL EXISTING REINFORCEMENT TO REMAIN.
5. ELEVATIONS ARE GIVEN FOR QUANTITY ESTIMATES ONLY.
6. REFER TO CONTRACT D250094 FOR ORIGINAL CONSTRUCTION DETAILS.

LEGEND:

AREAS OF PROPOSED WORK: ITEM 582.05M REMOVAL OF STRUCTURAL CONCRETE REPLACEMENT WITH CLASS A CONCRETE

AREAS OF PROPOSED WORK: ITEM 580.01M REMOVAL OF STRUCTURAL CONCRETE (CM), ITEM 555.0105M CONCRETE FOR STRUCTURES, CLASS A (CM)

BRIDGE BEARING RESTORATION NOTES:

1. THE BRIDGE BEARING RESTORATION ITEM 15565.4302M SHALL INCLUDE ALL DESIGNATED WORK AS PER THE SPECIFICATION.
2. STRUCTURAL LIFTING SHALL BE USED WITH ALL EXPANSION BEARING RESTORATION.
3. IF THE CONTRACTOR ELECTS TO LIFT ONLY ONE GIRDER AT A TIME PER SPAN (TO A MAXIMUM OF 3 nos TO REMOVE LOAD FROM BEARINGS), NO VEHICULAR TRAFFIC RESTRICTIONS WILL BE REQUIRED AS STATED IN SPECIFICATION SECTION 585- STRUCTURAL LIFTING OPERATIONS.
4. BEARING RESTORATION SHALL INCLUDE REPLACEMENT OF BRONZE PLATE.

* PERFORM STRUCTURAL LIFTING UNDER ITEM 585.01M STRUCTURAL LIFTING OPERATIONS TYPE A (LIFTING AT AN ABUTMENT).

JACKING LOADS:
D.L. = 50 MT
L.L. = 50 MT
TOTAL = 100 MT

CONCRETE TABLE (m^3)		
PLACEMENT	QUANTITY	ITEM NO.
PEDESTAL #5	0.09	555.0105M

LIST OF ITEMS USED:

ITEM 555.0105M - CONCRETE FOR STRUCTURES CLASS A (CM)
ITEM 580.01M - REMOVAL OF STRUCTURAL CONCRETE (CM)
ITEM 582.05M - REMOVAL OF STRUCTURAL CONCRETE REPLACEMENT WITH CLASS A CONCRETE (CM)
ITEM 585.01M - STRUCTURAL LIFTING OPERATIONS TYPE A (EA)
ITEM 15565.4302M - BRIDGE BEARING RESTORATION (EA)

ALL DIMENSIONS ARE IN mm UNLESS OTHERWISE NOTED

AS BUILT REVISIONS

SIGNATURE DATE

INTERSTATE 481 NB
OVER
TAFT ROAD
SOUTH ABUTMENT

STATE OF NEW YORK
DEPARTMENT OF TRANSPORTATION

FILENAME	REGION	DATE	DRAWING NO.
305613AM.A18	3	10/02	AB9-3

DESIGN SUPERVISOR ESTIMATED BY DRAFTED BY CHECKED BY
JOB MANAGER DESIGNED BY CHECKED BY

FED ROAD REG. NO.	STATE	CONTRACT NO.	SHEET NO.	TOTAL SHEETS
1	N.Y.	D259214	259	432

BRIDGE REHABILITATION PROJECT (ELEMENT SPECIFIC)
VARIOUS BRIDGES ON INTERSTATE 481
TOWNS OF DEWITT AND CICERO
ONONDAGA COUNTY
P.I.N. 305613 | B.I.N. 1072582

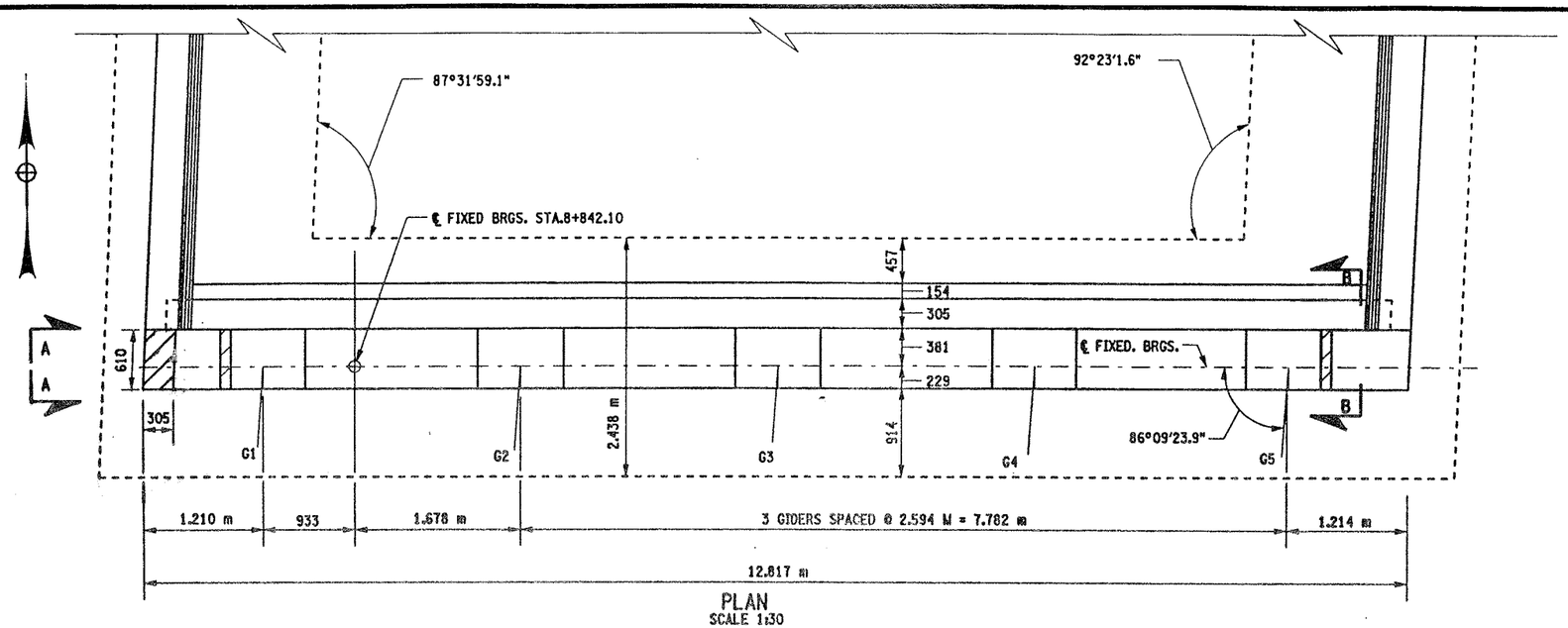

PLAN
SCALE 1:30

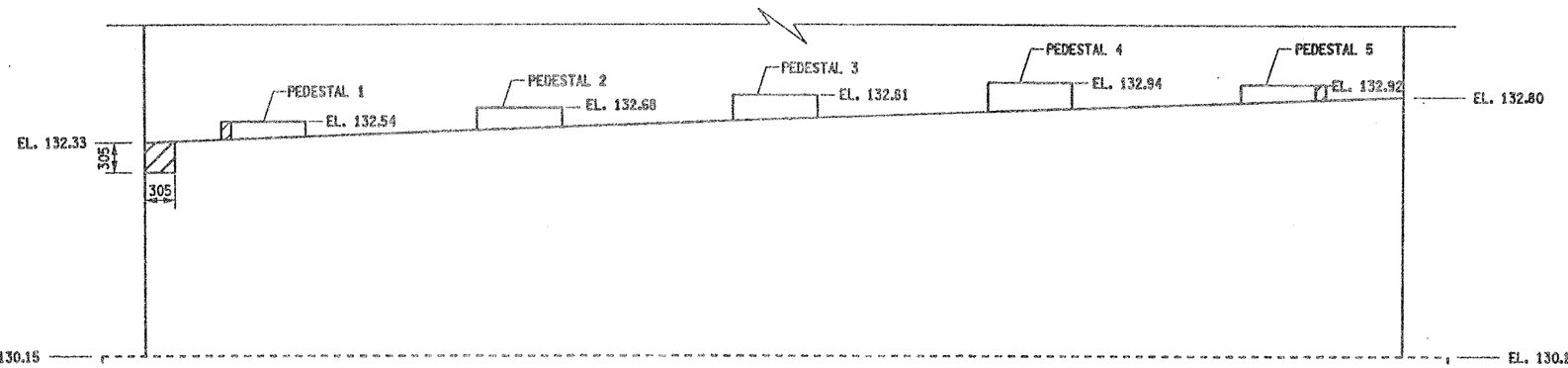

NORTH ABUTMENT ELEVATION
SCALE 1:30

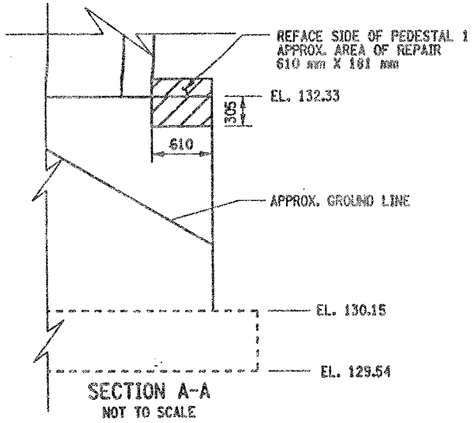

SECTION A-A
NOT TO SCALE

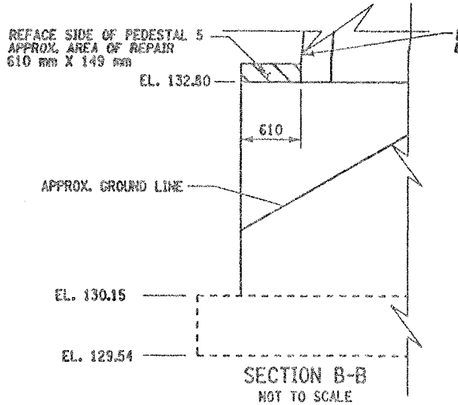

SECTION B-B
NOT TO SCALE

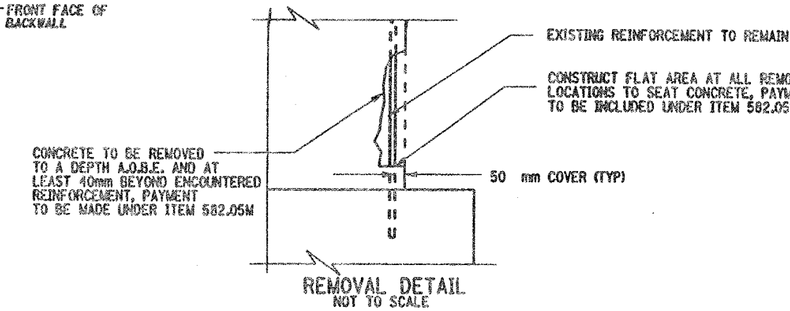

REMOVAL DETAIL
NOT TO SCALE

NOTES:

1. ALL DIMENSIONS SHOWN FOR CONCRETE REMOVAL ARE APPROXIMATE AND SHALL BE FIELD VERIFIED BY THE CONTRACTOR AND EIC.
2. REMOVE CONCRETE TO LIMITS SHOWN AS WELL AS TO SOUND CONCRETE, A.O.B.E.
3. WHEN REMOVING EXISTING CONCRETE, SAWCUT 5mm MIN. TO PRODUCE NEAT REMOVAL LINES. ANY COST TO BE INCLUDED IN THE BID PRICE FOR ITEM 582.05 M
4. ALL EXISTING REINFORCEMENT TO REMAIN.
5. ELEVATIONS ARE GIVEN FOR QUANTITY ESTIMATES ONLY.
6. REFER TO CONTRACT D250094 FOR ORIGINAL CONSTRUCTION DETAILS.

LEGEND:

AREAS OF PROPOSED WORK: ITEM 582.05M REMOVAL OF STRUCTURAL CONCRETE REPLACEMENT WITH CLASS A CONCRETE

LIST OF ITEMS USED:

ITEM 582.05M - REMOVAL OF STRUCTURAL CONCRETE - REPLACEMENT WITH CLASS A CONCRETE (CM)

ALL DIMENSIONS ARE IN mm UNLESS OTHERWISE NOTED

AS BUILT REVISIONS

SIGNATURE DATE

INTERSTATE 481 NB
OVER
TAFT ROAD
NORTH ABUTMENT

STATE OF NEW YORK
DEPARTMENT OF TRANSPORTATION

FILENAME	REGION	DATE	DRAWING NO.
305613AN_A18	3	10/02	AB9-4

DESIGN SUPERVISOR ____ JOB MANAGER ____ DESIGNED BY ____ CHECKED BY ____ ESTIMATED BY ____ DRAFTED BY ____ CHECKED BY ____

FED ROAD REG. NO.	STATE	CONTRACT NO.	SHEET NO.	TOTAL SHEETS
1	N.Y.	D259214	362	432

BRIDGE REHABILITATION PROJECT (ELEMENT SPECIFIC)
VARIOUS BRIDGES ON INTERSTATE 481
TOWNS OF DEWITT AND CICERO
ONONDAGA COUNTY
P.I.N. 305613 | B.I.N. ALL BINS

BRIDGE JOINT TABLE

B.I.N. NUMBER	JOINT LOCATION	JOINT SKEW	SPAN(S) LENGTH FOR JOINT (METERS)	JOINT BEND LOCAT'N RT	JOINT BEND LOCAT'N LT	EXISTING JOINT TYPE	PROPOSED JOINT TYPE	CURB TO CURB DISTANCE (METERS) (SEE NOTES)	FASCIA & MEDIAN LENGTH (METERS) LT/RT	TOTAL LENGTH (METERS)	JOINT ITEM NUMBER(S)	DRAWING NUMBER SECT VIEW	DRAWING NUMBER PLAN VIEW	DRAWING NUMBER FASCIA DETAIL
1072530	EAST ABUT.	0°-00'-00"	33.528	N	N	ACJ	MAC-5	15.850	.457/.457	16.764	567.35M	JD-30	JD-29	JD-30
	WEST ABUT.	0°-00'-00"	37.795	N	N	ACJ	MAC-5	15.850	.457/.457	16.764	567.35M	JD-30	JD-29	JD-30
1072571	SOUTH ABUT.	20°-29'-45.2"	44.196	N	N	ACJ	MAC-6	14.481	.488/.488	15.457	567.36M	JD-32	JD-31	JD-32
	NORTH ABUT.	20°-29'-45.2"	———	N	N	ACJ	MAC-1	15.456	.488/.488	16.428	567.31M	JD-32	JD-31	JD-32
1072572	SOUTH ABUT.	21°-09'-2.1"	44.196	N	N	ACJ	MAC-6	12.746	.490/.490	13.726	567.36M	JD-34	JD-33	JD-34
	NORTH ABUT.	21°-09'-2.1"	———	N	N	ACJ	MAC-1	12.746	.490/.490	13.726	567.31M	JD-34	JD-33	JD-34
1072581	SOUTH ABUT.	3°59'-27.5"	37.033	N	N	ACJ	MAC-5	11.917	.458/.458	12.833	567.35M	JD-36	JD-35	JD-36
	NORTH ABUT.	3°-59'-27.5"	———	N	N	ACJ	MAC-1	11.917	.458/.458	12.833	567.31M	JD-36	JD-35	JD-36
1072582	SOUTH ABUT.	3°-51'-57.9"	37.033	N	N	ACJ	MAC-5	11.915	.458/.458	12.831	567.35M	JD-38	JD-37	JD-38
	NORTH ABUT.	3°-51'-57.9"	———	N	N	ACJ	MAC-1	11.915	.458/.458	12.831	567.31M	JD-38	JD-37	JD-38
1072781	EAST ABUT.	16°-26'-24"	———	N	N	ACJ	MAC-1	12.500	.530/.530	13.560	567.31M	JD-40	JD-39	JD-40
	WEST ABUT.	16°-26'-24"	33.635	N	N	ACJ	MAC-5	12.500	.530/.530	13.560	567.35M	JD-40	JD-39	JD-40
1072782	EAST ABUT.	16°-26'-24"	———	N	N	ACJ	MAC-1	13.183	.530/.530	14.243	567.31M	JD-42	JD-41	JD-42
	WEST ABUT.	16°-26'-24"	31.394	N	N	ACJ	MAC-5	12.589	.530/.530	13.649	567.35M	JD-42	JD-41	JD-42
1072791	EAST ABUT.	17°-02'-59.4"	30.785	N	N	ACJ	RCS	12.566	.531/.531	13.628	16567.64M	JD-47	JD-43	JD-47
	WEST ABUT.	17°-02'-59.4"	———	N	N	ACJ	RCS	12.566	.531/.531	13.628	16567.64M	JD-47	JD-43	JD-47
1072792	EAST ABUT.	17°-02'-59.4"	30.785	N	N	ACJ	MAC-5	12.566	.530/.530	14.015	567.35M	JD-44	JD-43	JD-44
	WEST ABUT.	17°-02'-59.4"	———	N	N	ACJ	MAC-1	12.566	.530/.530	14.015	567.31M	JD-44	JD-43	JD-44
1093510	WEST ABUT.	44°-07'-00"	———	N	N	ACJ/ADA	RCS	16.560	.637/.637	17.834	16567.64M	JD-46	JD-45	JD-46
	EAST ABUT.	40°-26'-00"	37.522	N	N	ADA	RADA	15.620	———	15.620	———	JD-46	JD-45	———

LEGEND

EXISTING JOINT TYPE:

ACJ = ARMORED COMPRESSION JOINT SYSTEM
MOD = MODULAR JOINT SYSTEM
MAC = MODIFIED ARMORED COMPRESSION SYSTEM (NO HORIZ. ARMORING ANGLE)
ADA = ARMORED DECK ANGLE
SS = STRIP SEAL JOINT
OPEN = OPEN JOINT

PROPOSED JOINT TYPE:

MAC-1 = MOD. ARM./COMP. SEAL JT. SYS. (A-1)
MAC-2 = MOD. ARM./COMP. SEAL JT. SYS. (A-2)
MAC-5 = MOD. ARM./COMP. SEAL JT. SYS. (A-5)
MAC-6 = MOD. ARM./COMP. SEAL JT. SYS. (A-6)
RCS = REPLACE EXISTING COMPRESSION SEAL
RADA = REMOVE ARMOR DECK ANGLE
MOD-1 = MODULAR JT. SYS. (ONE-CELL)
MOD-2 = MODULAR JT. SYS. (TWO-CELL)

JOINT BEND LOCATION:

N = NO BENDS
CRB = CURB LINE
PAV'T = PAVEMENT

GENERAL NOTES:

- ALL MEASUREMENTS SHALL BE FIELD VERIFIED.
- CURB TO CURB LENGTHS ARE MEASURED ALONG ℄ OF JOINT.
- MULTIPLE DIMENSIONS ARE SHOWN LOOKING UP-STATION, LEFT TO RIGHT.
- ALL DIMENSIONS ARE SHOWN IN METERS.

INFORMATIONAL NOTES:

BIN 1072530 - NO JOINT AT PIER.

BIN 1072791 - REPLACE COMPRESSION SEALS
BEG. ABUT. (EAST), TYPE A-5
END ABUT. (WEST), TYPE A-1

FOR JOINT DETAILS REFER TO THE FOLLOWING DRAWINGS:

DWG. NO. JD-1 - MODIFIED ARMORED COMPRESSION SEAL JOINT SYSTEM.
DWG. NO. JD-24 - ONE-CELL MODULAR JOINT SYSTEM.
DWG. NO. JD-25 - TWO-CELL MODULAR JOINT SYSTEM.

LIST OF BRIDGE JOINT ITEMS USED:

ITEM 566.01M - MODULAR EXP. JOINT SYSTEM ONE-CELL (M)
ITEM 566.02M - MODULAR EXP. JOINT SYSTEM TWO-CELL (M)
ITEM 567.31M - MODIFIED ARMORED JOINT SYSTEM W/ COMP. SEAL TYPE A1 (m)
ITEM 567.32M - MODIFIED ARMORED JOINT SYSTEM W/ COMP. SEAL TYPE A2 (m)
ITEM 567.35M - MODIFIED ARMORED JOINT SYSTEM W/ COMP. SEAL TYPE A5 (m)
ITEM 567.36M - MODIFIED ARMORED JOINT SYSTEM W/ COMP. SEAL TYPE A6 (m)
ITEM 16567.640001M - REPLACE COMPRESSION SEAL FOR EXISTING BRDGE JOINTS (m)

ALL DIMENSIONS ARE IN m UNLESS OTHERWISE NOTED

AS BUILT REVISIONS

SIGNATURE ——— DATE ———

INTERSTATE 481 VARIOUS BRIDGES

BRIDGE JOINT TABLE

STATE OF NEW YORK
DEPARTMENT OF TRANSPORTATION

FILENAME	REGION	DATE	DRAWING NO.
305613AJ.JA1	3	10/02	JT-2

DESIGN SUPERVISOR ——— JOB MANAGER ——— DESIGNED BY ——— DRAFTED BY ——— ESTIMATED BY ——— CHECKED BY

FED ROAD REG. NO.	STATE	CONTRACT NO.	SHEET NO.	TOTAL SHEETS
1	N.Y.	D259214	401	432

BRIDGE REHABILITATION PROJECT (ELEMENT SPECIFIC)
VARIOUS BRIDGES ON INTERSTATE 481
TOWNS OF DEWITT AND CICERO
ONONDAGA COUNTY
P.I.N. 305613 B.I.N. 1072582

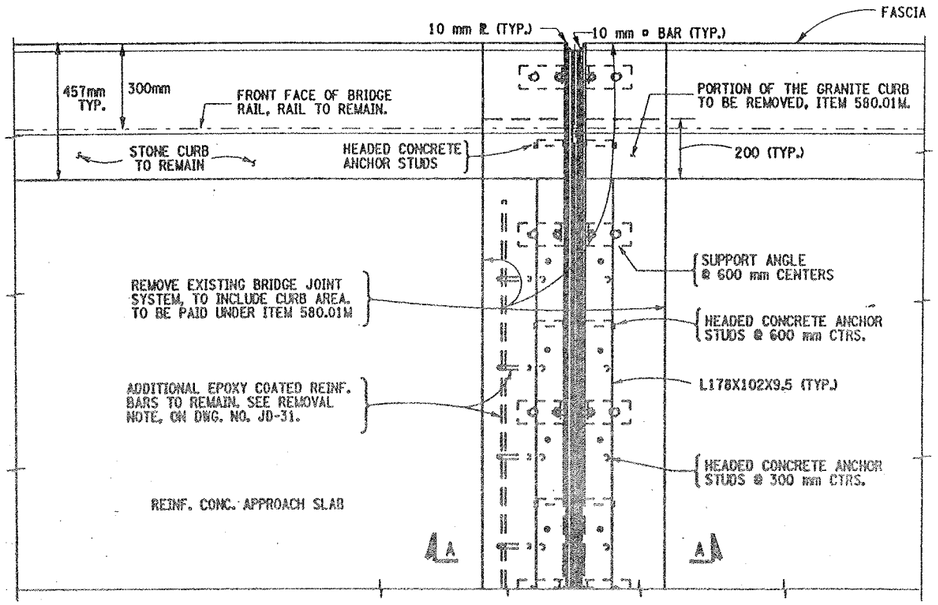

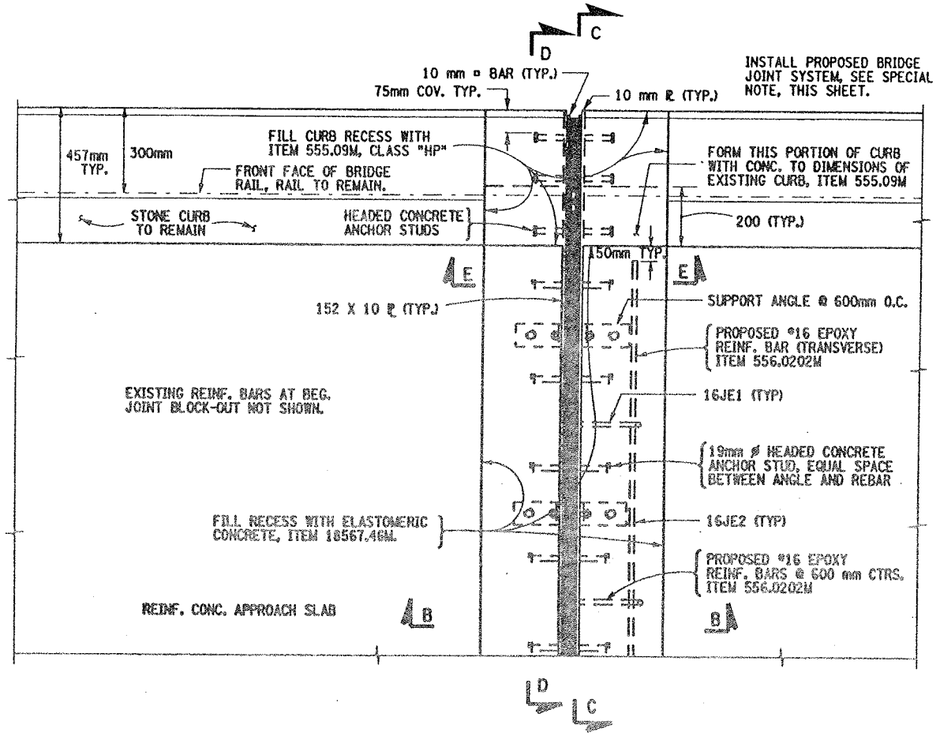

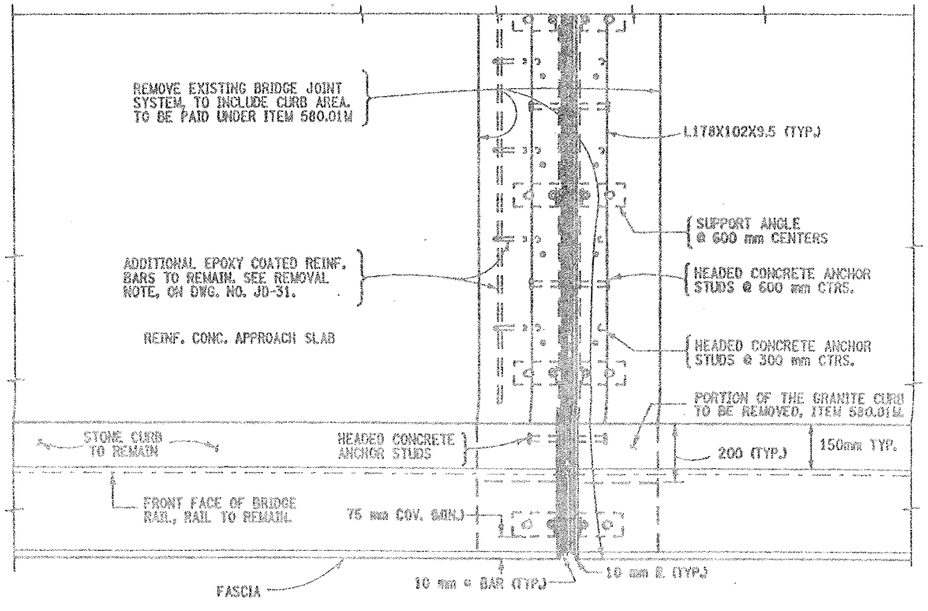

EXISTING ABUTMENT JOINT PARTIAL PLAN

BIN 1072582 - BEG. ABUT. SHOWN
END ABUT. SIMILAR

NOT TO SCALE

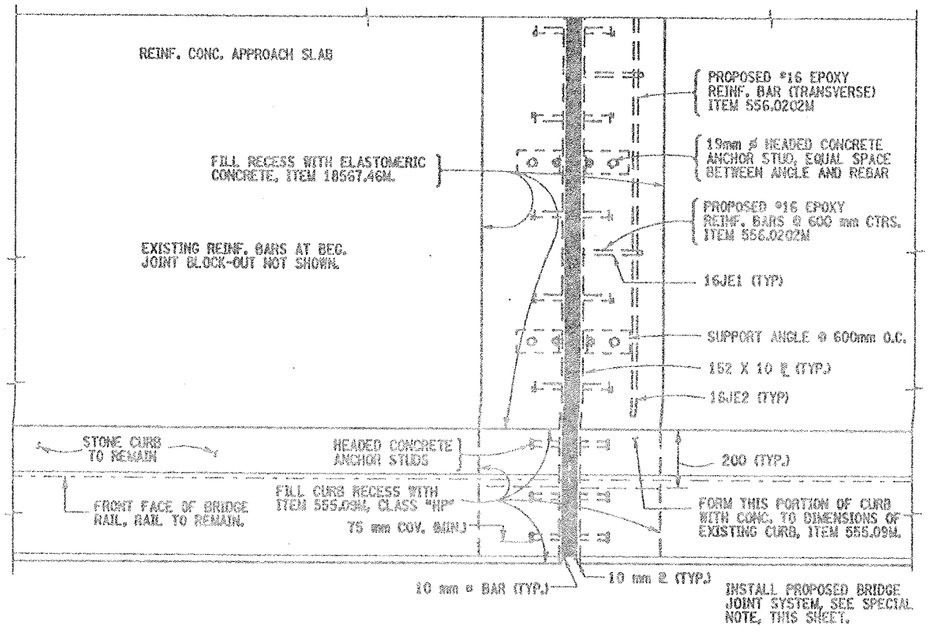

PROPOSED ABUTMENT JOINT PARTIAL PLAN

BIN 1072582 - BEG. ABUT. SHOWN
END ABUT. SIMILAR

NOT TO SCALE

NOTES:

1. REFER TO DWG. NO. JD-1 FOR PROPOSED JOINT DETAILS AND ALL NOTES SHALL APPLY.
2. FOR SECTION VIEWS SEE DWG. NO. JD-38.
3. REFER TO DWG. NO. JT-2 FOR PROPOSED BRIDGE JOINT INSTALLATION LOCATIONS.
4. THE SECTION OF THE GRANITE CURB SHALL BE SAWCUT TO PRODUCE NEAT REMOVAL LINES. COST BE TO INCLUDED IN PRICE BID FOR 580.01M.
5. THE STRUCTURE HAS A 3°-51'-57.9" SKEW ANGLE.
6. BRIDGE JOINT REPAIRS/REPLACEMENT SHALL BE CONDUCTED UTILIZING NIGHT-TIME CONSTRUCTION TECHNIQUES FOR BOTH OF THESE STRUCTURES. WHEN EVER THE JOINT BLOCK-OUT CONCRETE IS REMOVED OR CURING. STEEL ROAD PLATES SHALL BE USED. REFER TO DWG. NO. AA-RP1 FOR ROAD PLATE DETAILS.

SPECIAL NOTE:

BIN 1072582 - INSTALL ITEM 567.35M FOR SOUTH ABUT. JOINT.
INSTALL ITEM 567.31M FOR NORTH ABUT. JOINT.

WORK TO BE DONE:

REPLACE BEGINNING AND END ABUTMENT JOINTS.

ITEMS USED:

ITEM 555.09M - STRUCT. CONCRETE, CLASS "HP" (CM)
ITEM 556.0202M - EPOXY-COATED BAR REINF. FOR STRUCT. (Kg)
ITEM 567.31M - MOD. ARM. JOINT SYSTEM W/COMP. SEAL TYPE A-1 (M)
ITEM 567.35M - MOD. ARM. JOINT SYSTEM W/COMP. SEAL TYPE A-5 (M)
ITEM 18567.46M - ELASTOMERIC CONCRETE FOR BRIDGE JOINT SYSTEMS (M)
ITEM 580.01M - REMOVAL OF STRUCT. CONCRETE (CM)

ALL DIMENSIONS ARE IN mm UNLESS OTHERWISE NOTED

AS BUILT REVISIONS

SIGNATURE DATE

INTERSTATE 481 NB
OVER
TAFT ROAD

BRIDGE JOINT DETAILS

STATE OF NEW YORK
DEPARTMENT OF TRANSPORTATION

FILENAME	REGION	DATE	DRAWING NO.
305613AJJA1	3	10/02	JD-37

DESIGN SUPERVISOR — JOB MANAGER — DESIGNED BY — CHECKED BY
ESTIMATED BY — DRAFTED BY — CHECKED BY

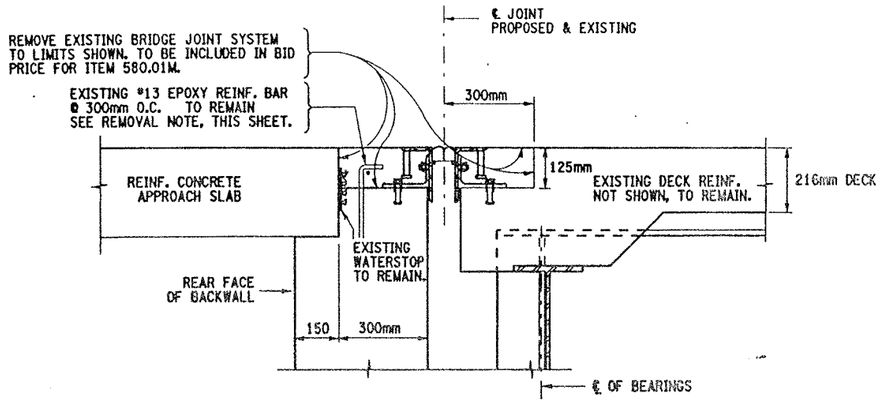

SECTION A-A
EXISTING ABUTMENT JOINT

NOT TO SCALE

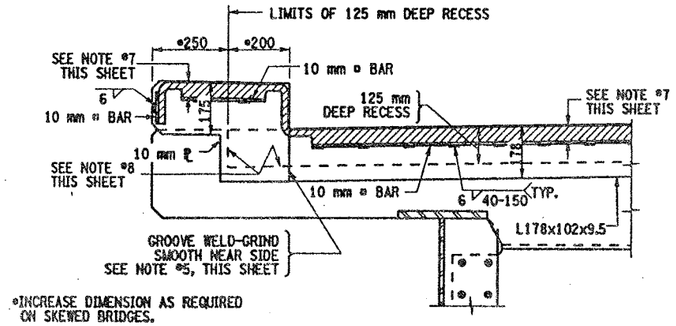

PROPOSED ABUTMENT JOINT
SECTION C-C (BRUSH CURB)

NOT TO SCALE

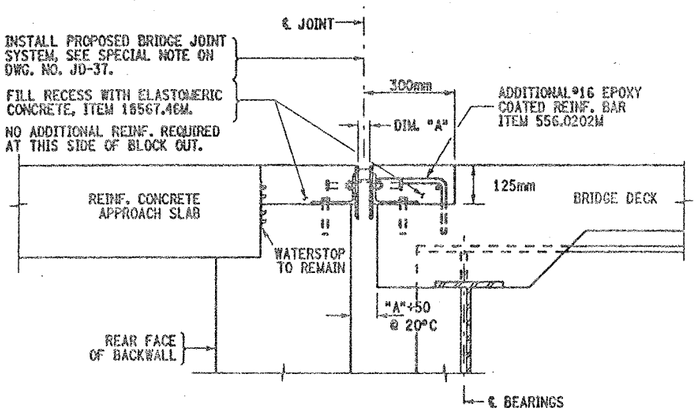

SECTION B-B
PROPOSED ABUTMENT JOINT

NOT TO SCALE

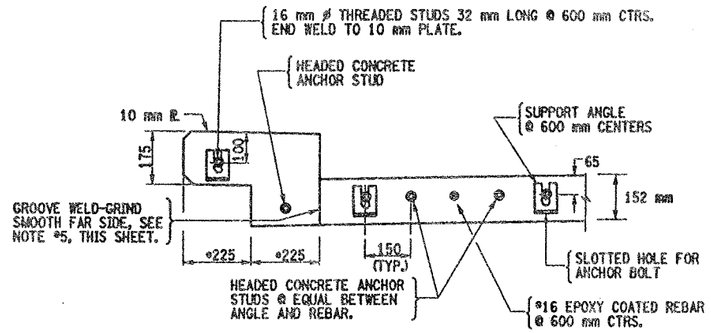

*INCREASE DIMENSION AS REQUIRED ON SKEWED BRIDGES.

PROPOSED ABUTMENT JOINT
SECTION D-D (BRUSH CURB)

(ONLY THE STEEL SHOWN)

NOT TO SCALE

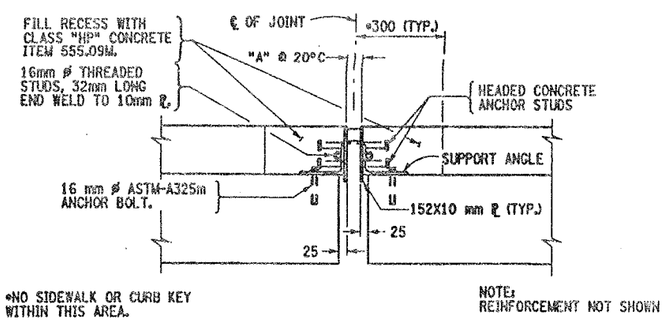

PROPOSED ABUTMENT JOINT
SECTION E-E

FED ROAD REG. NO.	STATE	CONTRACT NO.	SHEET NO.	TOTAL SHEETS
1	N.Y.	D259214	402	432

BRIDGE REHABILITATION PROJECT (ELEMENT SPECIFIC)
VARIOUS BRIDGES ON INTERSTATE 481
TOWNS OF DEWITT AND CICERO
ONONDAGA COUNTY
P.I.N. 305613 | B.I.N. 1072582

REMOVAL NOTE:

EXISTING EPOXY COATED REINF. BARS ENCOUNTERED AT THE JOINT BLOCK-OUTS, SHALL REMAIN. CARE SHALL BE TAKEN DURING REMOVAL OPERATIONS, NOT TO DAMAGE THE REINFORCEMENT BARS.

PRIOR TO PLACEMENT OF NEW CONCRETE THE EXISTING EPOXY BARS SHALL BE CLEANED AND ANY FIELD REPAIRS DEEMED NECESSARY BY THE ENGINEER, BE MADE AS PER SECTION 556-3.02(C) OF STANDARD SPECIFICATIONS. TO BE INCLUDED IN PRICE BID FOR ITEM 580.01M.

NOTES:

1. ACTUAL BRIDGE JOINT BLOCK-OUT DIMENSIONS MAY VARY. REMOVAL LIMITS SHALL BE TO EXISTING BLOCK-OUT LOCATIONS, AOBE.
2. EXISTING WATERSTOPS SHALL REMAIN.
3. FOR CALCULATION OF "A" DIMENSION REFER TO DWG. NO. JD-1.
4. REFER TO DWG. NO. JD-37 FOR PROPOSED PARTIAL PLAN VIEWS.
5. ALL WELDS SHALL BE GROUND SMOOTH TO THE SATISFACTION OF THE ENGINEER, ON SEAL CONTACT SIDE OF EDGE BEAM.
6. REFER TO DWG. NO. JD-1 FOR PROPOSED JOINT DETAILS AND ALL NOTES SHALL APPLY.
7. THIS DEPTH SHALL BE INDICATED ON THE SHOP DRAWINGS AND SHALL BE SUCH THAT WHEN THE SEAL IS COMPRESSED TO 50% OF ITS NOMINAL WIDTH, THE TOP OF THE SEAL SHALL BE NOT LESS THAN 6 mm NOR MORE THAN 19 mm BELOW THE TOP OF ROADWAY.
8. RECESSES RECEIVING ITEM 555.09M, AFTER SURFACE PREPARATION, THOROUGHLY WET THE CONCRETE SURFACES AND ALL POROUS SURFACES TO BE IN CONTACT WITH NEW CONCRETE FOR 12 HOURS. NOTE, THE USE OF MATERIAL SPECIF. 705-22 PORTLAND CEMENT MORTAR BONDING GROUT HAS BEEN ELIMINATED, (PROJECT PROPOSAL).

ITEMS USED:

ITEM 555.09M - STRUCT. CONCRETE, CLASS "HP" (CM)
ITEM 556.0202M - EPOXY-COATED BAR REINF. FOR STRUCT. (Kg)
ITEM 18567.46M - ELASTOMERIC CONCRETE FOR BRIDGE JOINT SYSTEMS (M)
ITEM 580.01M - REMOVAL OF STRUCT. CONCRETE (CM)

ALL DIMENSIONS ARE IN mm UNLESS OTHERWISE NOTED

AS BUILT REVISIONS

SIGNATURE DATE

INTERSTATE 481 NB
OVER
ROUTE 298

BRIDGE JOINT DETAILS

STATE OF NEW YORK
DEPARTMENT OF TRANSPORTATION

FILENAME	REGION	DATE	DRAWING NO.
305613AJJA1	3	10/02	JD-38

DESIGN SUPERVISOR ____ JOB MANAGER ____ DESIGNED BY ____ ESTIMATED BY ____ DRAFTED BY ____ CHECKED BY ____

BIN: 1072582
I481 NB / Taft Rd

DECK DETERIORATION PLAN

NOT TO SCALE

N

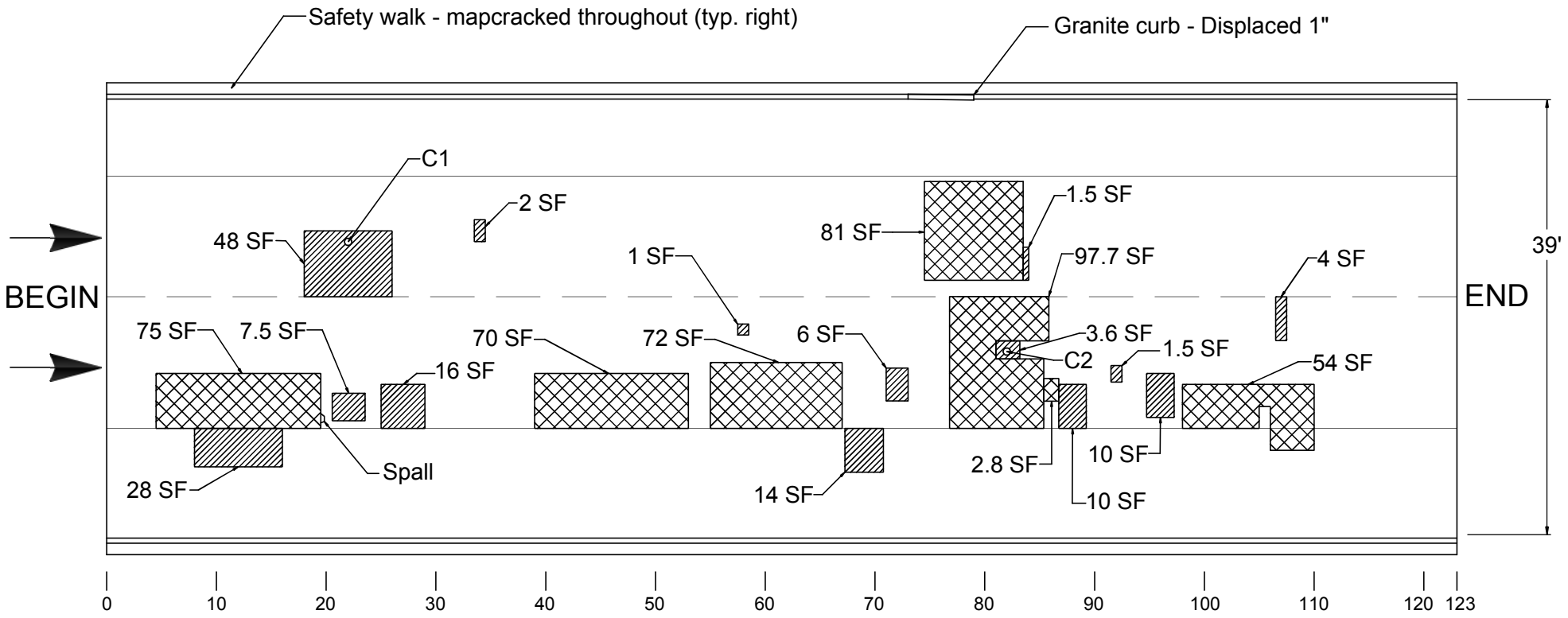

TOTAL DAMAGED AREA EQUALS 605.6 SF WHICH IS 12.3 % OF DECK SURFACE

LEGEND

- Hollow Concrete
- Patch
- Coring location
- Crack

IN-DEPTH PHOTO DOCUMENTATION

BIN: 1072582
I481 NB / Taft Rd

IN-DEPTH INSPECTION
PHOTO LOCATION PLAN

N

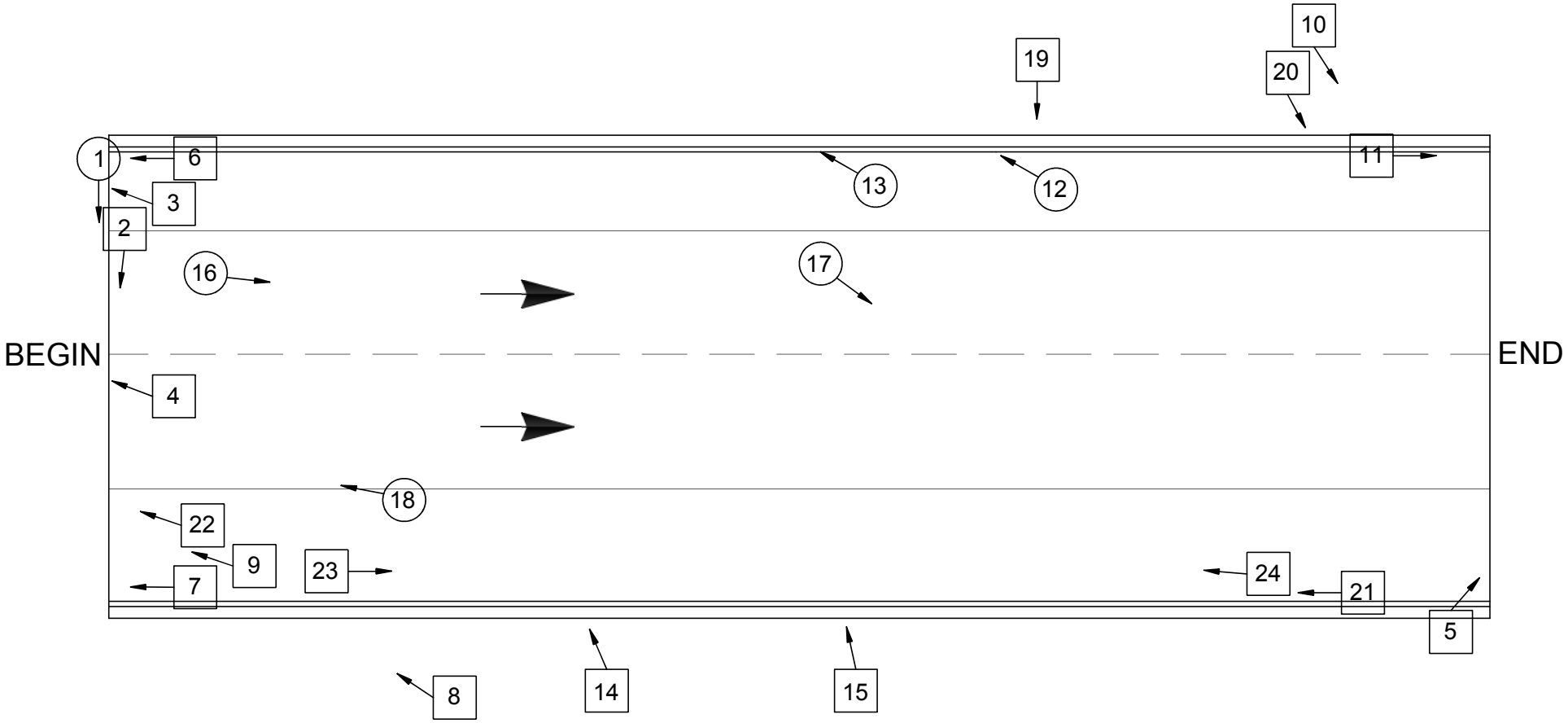

LEGEND	
(XX)	Photo Above Deck
XX	Photo Below Deck

In-Depth Inspection Photos

I-481 NB over Taft Rd., BIN 1072582



DESCRIPTION: BEGIN JOINT LEFT LANE (L-R)

PHOTO 1



DESCRIPTION: BEGIN JOINT UNDERSIDE (L-R)

PHOTO 2

In-Depth Inspection Photos

I-481 NB over Taft Rd., BIN 1072582



DESCRIPTION: BEGIN PEDESTAL 1

PHOTO 3



DESCRIPTION: BEGIN PEDESTAL 3

PHOTO 4



DESCRIPTION: END PEDESTAL 5 RIGHT

PHOTO 5



DESCRIPTION: BEGIN BACKWALL TOP LEFT

PHOTO 6

In-Depth Inspection Photos

I-481 NB over Taft Rd., BIN 1072582



DESCRIPTION: BEGIN BACKWALL TOP RIGHT

PHOTO 7



DESCRIPTION: BEGIN STEM

PHOTO 8

In-Depth Inspection Photos

I-481 NB over Taft Rd., BIN 1072582



DESCRIPTION: BEGIN STEM BAY 4

PHOTO 9



DESCRIPTION: END STEM

PHOTO 10

In-Depth Inspection Photos

I-481 NB over Taft Rd., BIN 1072582



DESCRIPTION: END STEM AT LEFT

PHOTO 11



DESCRIPTION: LEFT CURB 76’ FROM BEGIN

PHOTO 12



DESCRIPTION: LEFT SAFETYWALK AT MIDSPAN (E-B)

PHOTO 13



DESCRIPTION: RIGHT FASCIA AT SNOW FENCE POST 1 (TYP.)

PHOTO 14

In-Depth Inspection Photos

I-481 NB over Taft Rd., BIN 1072582



DESCRIPTION: RIGHT SNOW FENCE POST 4

PHOTO 15



DESCRIPTION: LEFT LANE NEAR BEGIN (B-E)

PHOTO 16



DESCRIPTION: LEFT LANE NEAR MIDSPAN (B-E)

PHOTO 17



DESCRIPTION: RIGHT LANE NEAR BEGIN (E-B)

PHOTO 18

In-Depth Inspection Photos

I-481 NB over Taft Rd., BIN 1072582



DESCRIPTION: DECK AT LEFT OVERHANG UNDER SNOW FENCE POST 6

PHOTO 19



DESCRIPTION: LEFT FASCIA UNDER THIRD TO LAST RAIL POST

PHOTO 20

In-Depth Inspection Photos

I-481 NB over Taft Rd., BIN 1072582



DESCRIPTION: RIGHT OVERHANG (E-B)

PHOTO 21



DESCRIPTION: BAY 4 AT BEGIN

PHOTO 22

In-Depth Inspection Photos

I-481 NB over Taft Rd., BIN 1072582



DESCRIPTION: GIRDER 5 (B-E)

PHOTO 23

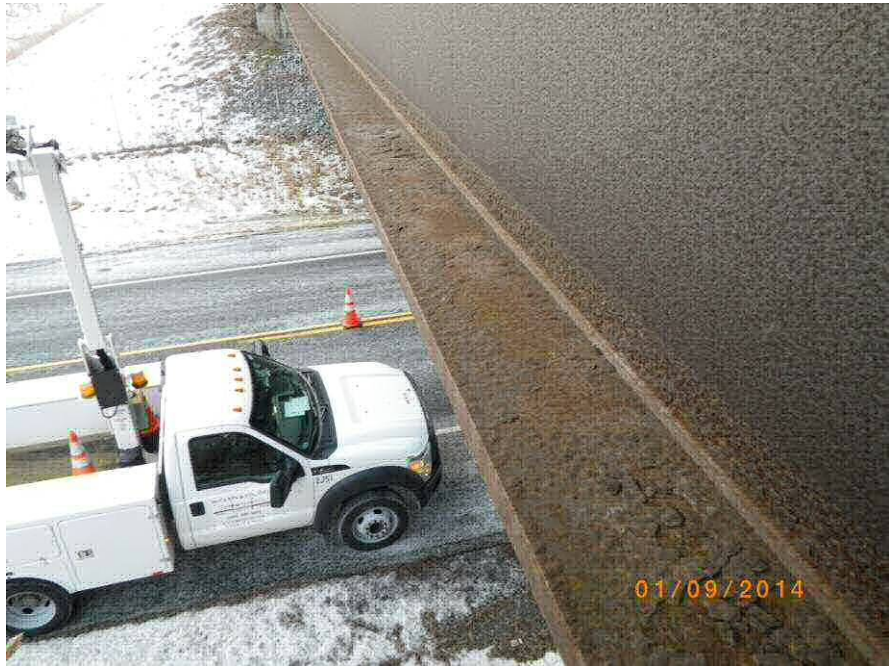

DESCRIPTION: GIRDER 5 (E-B)

PHOTO 24

ASBESTOS SAMPLING SURVEY

Asbestos Sampling Survey

Location:

BIN 1072582
Interstate Route I-481 North Bound
over Taft Road

Prepared for:

New York State
Department of Transportation

PIN 3056.13.111

LaBella Project No. 201001

August 2001

Table of Contents

Page

I. Project Summary 1

II. Site Description 1

III. Inspection Procedures 1

IV. Results 2

Certification 2

Figures and Table

I. Project Summary

In accordance with conditions of Term Agreement D012606, LaBella Associates, P.C. conducted an asbestos sampling survey of the Interstate Route I-481 north bound bridge over Taft Road. Based on laboratory analyses of bulk samples collected, no asbestos-containing materials were identified.

II. Site Description

The Site is located in Onondaga County, New York. For the purpose of this report, the Site consists of the Interstate Route I-481 north bound bridge over Taft Road. (See attached FIGURE 1 - Site Location Map).

III. Inspection Procedures

The following procedures were used to obtain the data for this Report:

A. A review of record drawings supplied by Region 3 personnel and a visual inspection of the subject structure were conducted to identify potential visible/accessible sources of asbestos-containing materials. Observations and notes were made to provide a description of the structure, and an estimate of the approximate amount, length, or area of ACM present.

B. Physical or operational constraints, which might affect the removal of the ACM, were identified and reported.

C. Bulk samples of suspected ACM were collected during the site inspection of the subject structure. Samples were taken from each homogeneous area that may contain ACM.

D. Samples were submitted for analysis. Preliminary PLM analyses of NOB materials were performed by LaBella Laboratories, a NYSDOH approved laboratory, to determine the presence and percentage of asbestos in each sample. TEM analyses of NOB materials, if necessary, were performed by AMA Analytical, Inc.

E. Lab results were used to determine the approximate location, type, and amount of the verified ACM.

F. A drawing of the structure at the Site was created, in order to show sample locations and the approximate locations and amounts of confirmed ACM observed in accessible locations.

Only accessible areas were inspected. Inaccessible areas, such as areas within the bridge or the approaches to the bridge were not included in this inspection. No investigation was conducted by LaBella Associates to determine the presence of underground utilities on or in the immediate vicinity of the Site. Actual sample locations are shown in the attached FIGURE 2. Results of bulk sample analyses are tabulated in the attached TABLE.

Figures & Table

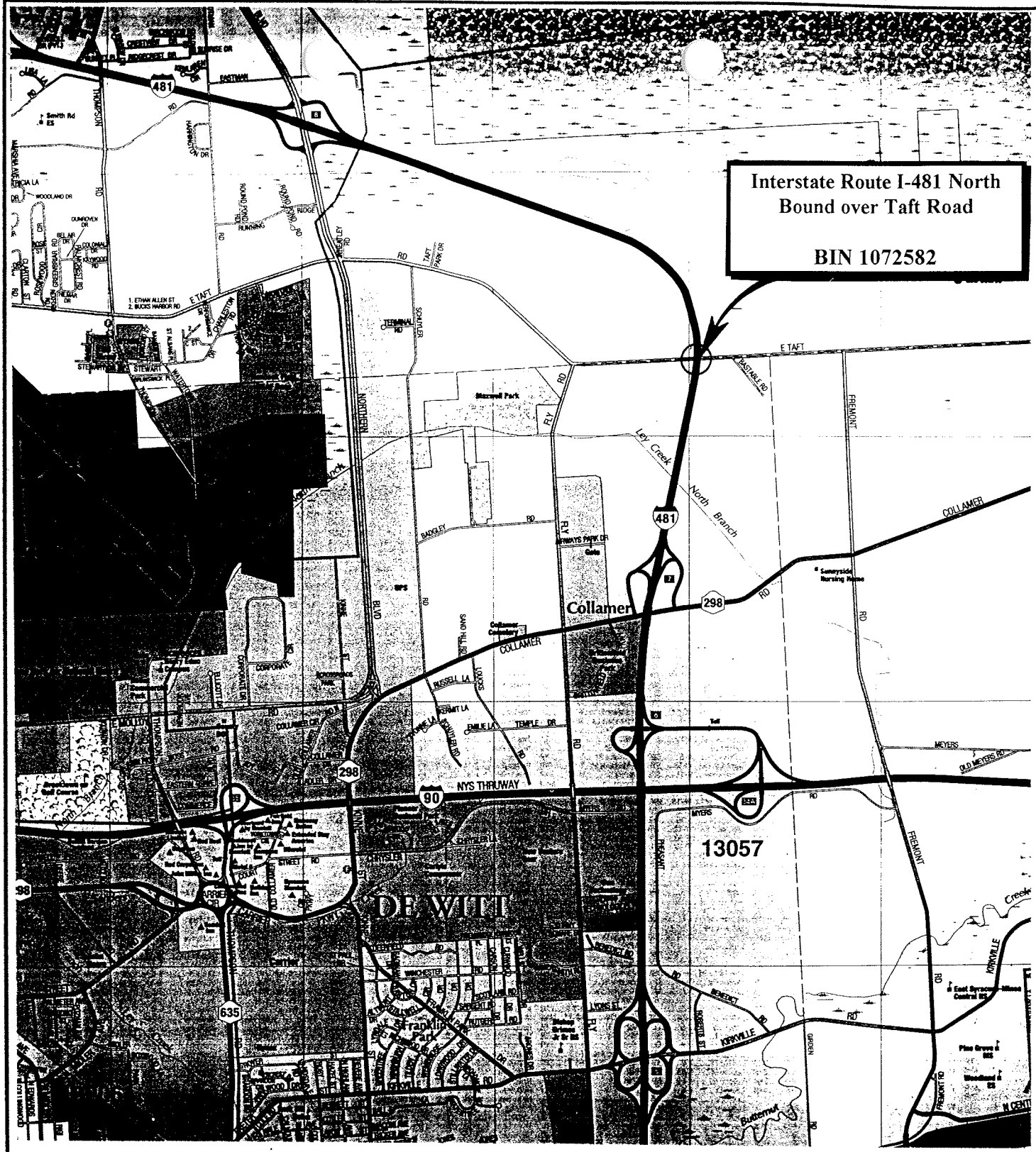

N

FIGURE 1
Site Location Map

Interstate Route I-481 North Bound over Taft Road
Onondaga County, New York

LABELLA

PROJECT NO. 201001

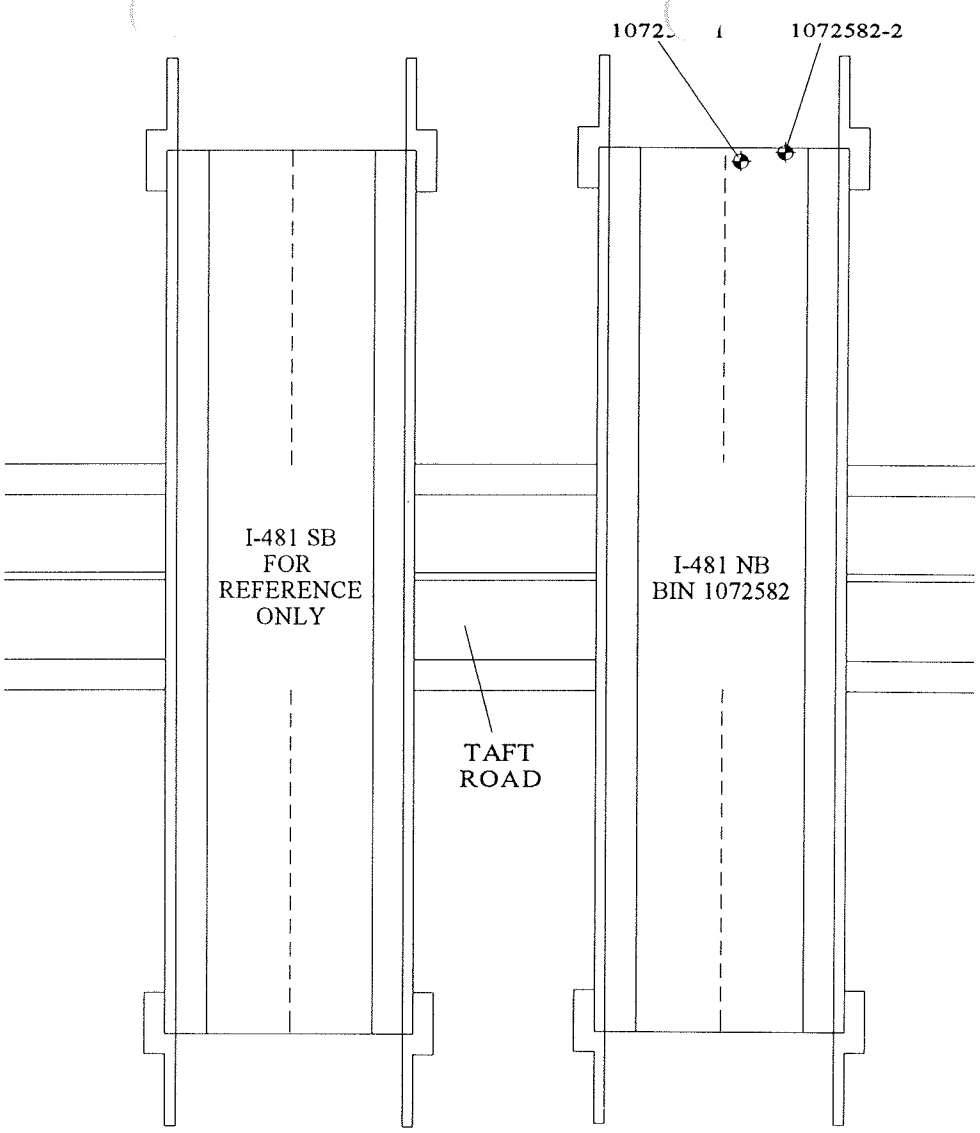

NOTE: NO ASBESTOS-CONTAINING MATERIALS IDENTIFIED.

LEGEND

◆ 1072582-1 SAMPLE LOCATION

NORTH	PROJECT TITLE: ASBESTOS SAMPLING SURVEY 19 BRIDGES ALONG INTERSTATE I-481 ONONDAGA COUNTY, NEW YORK	PROJECT NO. 201001 PIN 3056.13.111
	FIGURE TITLE: FIGURE 2 BIN 1072582 I-481 NB OVER TAFT ROAD SAMPLE LOCATIONS & CONFIRMED ACM	NOT TO SCALE DATE: AUGUST, 2001

Bulk Sample Results Table

Asbestos Sampling Survey
BIN 1072582
Interstate Route I-481 North Bound
over Taft Road
Onondaga County, New York
LaBella Project # 201001
PIN 3056.13.111

Sample #	Sample Location	Type of Material	Results % Asbestos	Amount of Material	Specification Item No.
1072582-1	North End of Bridge Beneath Bearing	Bearing Pad	None Detected	N/A	N/A
1072582-2	North End of Bridge on Back Wall	Gray Masonry Coating	None Detected	N/A	N/A

LATEST BIENNIAL INSPECTION REPORT

Inspection Date: 9/19/2012 RC: 33 BIN: 1072582

Bridge Ratings

Carried: 481I 481I33012107 Crossed: TAFT ROAD CR 18 CheckValue: 1,806,050,827

Inspection Agency: 10 - NYSDOT Type of Inspection: 1 - BIENNIAL
GTMS: A02 -- Unpainted Steel - Stringer/Multi-Beam or Girder
POSTINGS: See Gen Rec Page 1 for Postings at time of inspection.
Further Investigation Needed: No
State Highway Number: 70-7 Milepoint: 13.39 AADT/Yr: 11858 / 2002
Orientation: 1 - North Political Unit: 0233 - Town of DEWITT Year Built: 1985
Total Spans: 1 Ramp Bridge Attached To Span: NA BIN: NA
General Recommendation: 6 Computed Condition Rating: 5.547

Abutment Ratings:	Beg Abut	End Abut
Joint with Deck	6	6
Bearings, Bolts, Pads	5	5
Seats and Pedestals	6	5
Backwall	5	5
Stem (Breastwall)	6	6
Erosion or Scour	6	6
Footings	9	9
Piles	8	8
Recommendation	6	5

Wingwall Ratings:	Beg Abut	End Abut
Walls	6	6
Footings	9	9
Erosion or Scour	6	6
Piles	8	8

Channel Ratings:	Channel
Stream Alignment	8
Erosion and Scour	8
Waterway Opening	8
Bank Protection	8

Approach Ratings:	Approaches
Drainage	4
Embankment	6
Settlement	6
Erosion	5
Pavement	4
Guide Railing	6

Number of Flags Issued:

RED: 0 Yellow: 0 Safety: 0

Vulnerability Reviews Recommended: 1=Yes, 2=No, 3=NA, X=NotActive

Hydraulic: 3	Overload: X	Steel: 2
Collision: 2	Concrete: X	Seismic: X

Inspector's Signature: CheckValue: 1,806,050,827 Date: 9/19/2012

Peter Riehlman,PE () (Inspector ID:3000052)

Signed copy of this inspection report is available in the appropriate NYSDOT Regional Office

Reviewed By: Date: 10/29/2012

James R. Manning,PE () (QC ID:3000023)

Signed copy of this inspection report is available in the appropriate NYSDOT Regional Office

Inspection Date: 9/19/2012 RC: 33 BIN: 1072582

Span Ratings

Carried: 481I 481I33012107 Crossed: TAFT ROAD CR 18 CheckValue: 1,806,050,827

Deck Element Ratings:	**001**
Wearing Surface	4
Curbs	4
Sidewalks, Fascias	5
Railings, Parapets	6
Scuppers	8
Gratings	8
Median	8
Mono Deck Surface	5

Superstructure Ratings:	**001**
Structural Deck	6
Primary Members	6
Secondary Members	6
Paint	5
Joints	8
Recommendation	6

Pier Ratings:	**001**
Bearings, Bolts, Pads	8
Pedestals	8
Top of Cap or Beam	8
Stem Solid Pier	8
Cap Beam	8
Pier Columns	8
Footings	8
Erosion or Scour	8
Piles	8
Recommendation	8

Utility Ratings:	**001**
Lighting	8
Sign Structure	8
Utilities and Support	8

Field Notes:

Field Date	Arrival	Departure	Temp (C)	Temp (F)	Weather Conditions
9/19/2012	2:30:00 PM	4:30:00 PM		65	ptly. cldy.

Inspection Date: 9/19/2012 RC: 33 BIN: 1072582

Inspection Notes

Carried: 481I 481I33012107 Crossed: TAFT ROAD CR 18 CheckValue: 1,806,050,827

Note ID: 331210725820000

General Note for Bridge
Referenced Photos: "1", "2", "3"
2012 Vegetation heavy growth at beg. and end left, both approaches. Sand buildup along both curbs and at approaches has resulted in poor drainage off the bridge with puddles in all 4 corners.

Note ID: 331210725820004

Approaches: Drainage -- Rated 4, Was 5
Referenced Photos: "4", "6", "7"
2012-Vegetation and sand buildup at both approaches left and right side and along both bridge curbs, is preventing proper drainage off the bridge. There are 4 puddles at all 4 corners of the bridge. At the beg. right, the approach curb has settled 3" below the bridge curb.

Note ID: 331210725820001

Approaches: Pavement -- Rated 4, Was 4
Referenced Photos: "5", "6", "8"
2012
Asphalt cracking and raveling along end approach slab.

Note ID: 331210725820002

Span 001 -- Deck Elements: Wearing Surface -- Rated 4, Was 5
Referenced Photos: "10"
2012 Right lane has several patches throughout.

Note ID: 331210725820003

Span 001 -- Deck Elements: Curbs -- Rated 4, Was 5
Referenced Photos: "4", "6", "7", "9"
2012-Vegetation and sand buildup at both approaches left and right side and along both bridge curbs, is preventing proper drainage off the bridge. There are 4 puddles at all 4 corners of the bridge. At the beg. right, the approach curb has settled 3" below the bridge curb.

Inspection Date: 9/19/2012 RC: 33 BIN: 1072582

Inspection Photos in Photo Number Order

Carried: 481I 481I33012107 Crossed: TAFT ROAD CR 18 CheckValue: 1,806,050,827

Camera Pole ID #

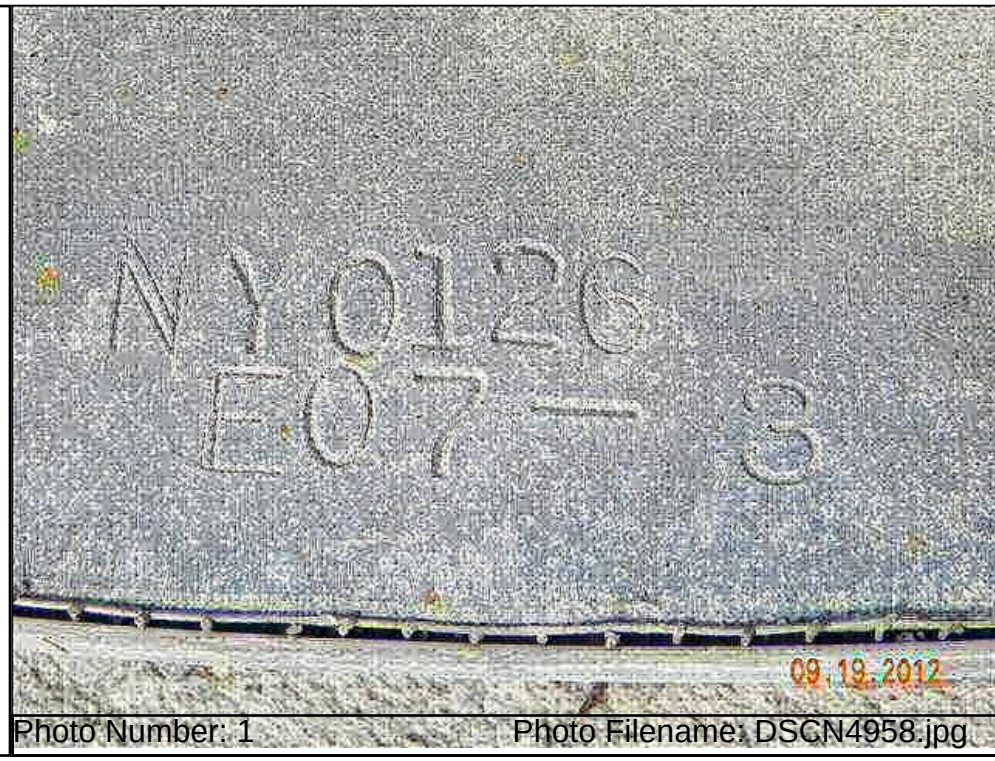

Photo Number: 1 Photo Filename: DSCN4958.jpg

Location:
Camera Pole Base



Photo Number: 2 Photo Filename: DSCN4954.jpg

Inspection Date: 9/19/2012 RC: 33 BIN: 1072582

Inspection Photos in Photo Number Order

Carried: 481l 481l33012107 Crossed: TAFT ROAD CR 18 CheckValue: 1,806,050,827

Location:
Camera Pole at End Rt (NE Quad)



Photo Number: 3 Photo Filename: DSCN4948.jpg

End Rt appr drainage/curb looking toward End



Photo Number: 4 Photo Filename: DSCN4949.jpg

Inspection Date: 9/19/2012 RC: 33 BIN: 1072582

Inspection Photos in Photo Number Order

Carried: 481I 481I33012107 Crossed: TAFT ROAD CR 18 CheckValue: 1,806,050,827

End appr pavt transition looking Lt



Photo Number: 5 Photo Filename: DSCN4953.jpg

Location:
Beg Lt appr/curb looking toward End



Photo Number: 6 Photo Filename: DSCN4941.jpg

Inspection Date: 9/19/2012 RC: 33 BIN: 1072582

Inspection Photos in Photo Number Order

Carried: 481I 481I33012107 Crossed: TAFT ROAD CR 18 CheckValue: 1,806,050,827

Location:
Beg Rt appr drainage/curb looking toward End



Photo Number: 7 Photo Filename: DSCN4942.jpg

Location:
Beg Rt appr curb



Photo Number: 8 Photo Filename: DSCN4944.jpg

Inspection Date: 9/19/2012 RC: 33 BIN: 1072582

Inspection Photos in Photo Number Order

Carried: 481I 481I33012107 Crossed: TAFT ROAD CR 18 CheckValue: 1,806,050,827

Location:
Rt curb near mid-span looking toward Beg



Photo Number: 9 Photo Filename: DSCN4948.jpg

Rt lane WS near mid-span looking toward End

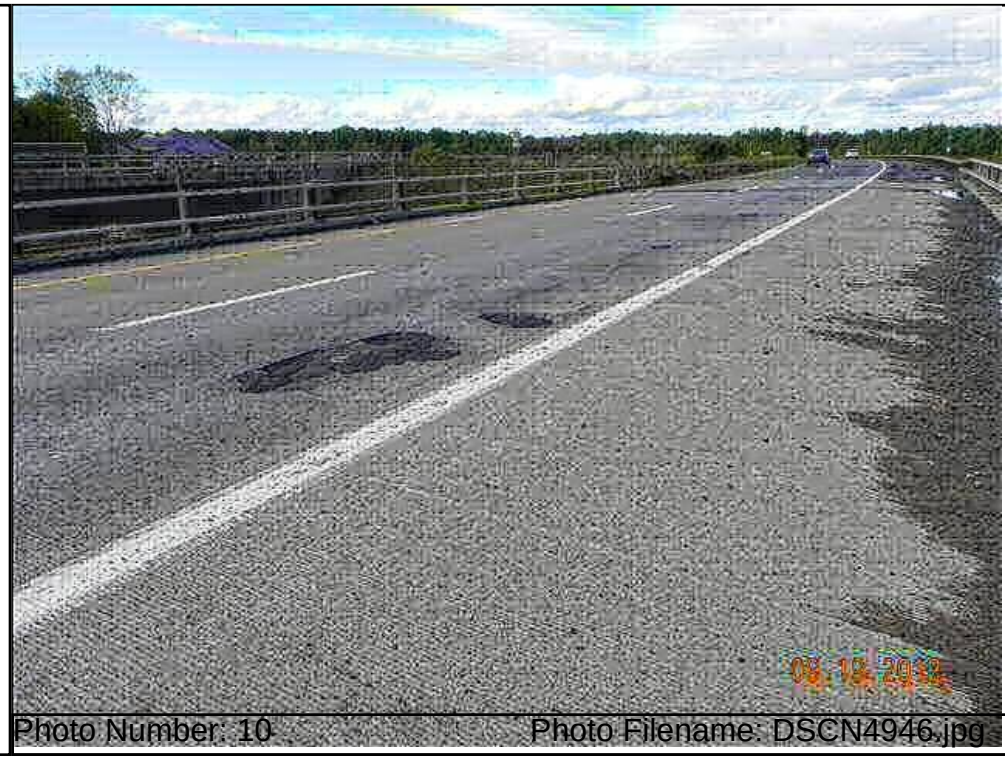

Photo Number: 10 Photo Filename: DSCN4946.jpg

Inspection Date: 9/19/2012 RC: 33 BIN: 1072582

Inspection Sketches in Sketch SysID Order

Carried: 481I 481I33012107 Crossed: TAFT ROAD CR 18 CheckValue: 1,806,050,827

Sketch ID: 331210725820000 Sketch Filename: LdRatNCL.12

General Sketch for Bridge
Referenced Photos: "1", "2", "3"

Region 3 LoadRatingFieldCheckForm

NYSDOT BRIDGE INSPECTION REPORT			
SHEET	1	OF	1

LOAD RATING FIELD CHECK FORM

BIN:	1072582		Insp. Date:	09/19/2012

Dead Load - Note Changes since Last load Rating or state "NONE":

NONE

Section Loss -Note Changes since Last load Rating or state "NONE":

NONE

Additional Notes:

NONE

Attachments:

Team Leader: Peter Riehlman

Inspection Date: 9/19/2012 RC: 33 BIN: 1072582

Gen. Rec., Postings, Federal Ratings, etc.

Carried: 481I 481I33012107 Crossed: TAFT ROAD CR 18 CheckValue: 1,806,050,827

Overall Condition:

GENERAL RECOMMENDATION: 6

Computed Condition Rating: 5.547

Problems Requiring Action:

NO Further Investigation Needed

NO Flags Issued

POSTINGS:

Inspector Confirmed existing Posting data as correct.
Posted Vertical Clearance ON the bridge is: No Posting
Posted Vertical Clearance UNDER the bridge is: No Posting
No Load Restriction is posted on this bridge

Overloads Observed:

NO Overload Vehicles were observed on this bridge

FEDERAL RATINGS:

NBI Deck Condition: 7
NBI Superstruct Condition: 8
NBI Substruct Condition: 8
NBI Channel Condition: N
NBI Culvert Condition: N

Diving Inspection Needs:

Diving Inspection Required? No Date of Last Diving Inspection: No Date

Inventory Problems:

Inventory Problems Exist? No

Miscellaneous:

Time Required to Inspect Bridge: 2 Hours

Lane Closure Needs: None Required

No Railroad Flagging Required

No Pedestrian Fence

There is a Snow Fence present

The BIN Plate is in OK condition

Inspection Date: 9/19/2012 RC: 33 BIN: 1072582

Gen. Rec., Postings, Federal Ratings, etc.

Carried: 481I 481I33012107 Crossed: TAFT ROAD CR 18 CheckValue: 1,806,050,827

Special Emphasis Inspection Required:

Non-Redundant/Fracture Critical Members - No
Pin and Hangers - No
Fatigue-Prone Welds - No
Non-Categorized Fatigue-Prone Details - No
Other (Specified in Text) - No

Special Emphasis Details:

No Special Emphasis Inspection Required.

General Notes To the Next Inspector:

access at northwest corner and southwest corner of 2 bridges

Improvements Observed:

Inspection Date: 9/19/2012 RC: 33 BIN: 1072582

Review Progress and Personnel Present at Inspection

Carried: 481I 481I33012107 Crossed: TAFT ROAD CR 18 CheckValue: 1,806,050,827

Inspection Submission Status:

Submitted to QC Engineer on: 9/28/2012
QC Submission Number: 353221

QC Review Completed: 10/29/2012
QC Engineer: James R. Manning

Submitted to Liaison Engineer on: 11/7/2012
Liaison Submission Number: 53235

Liaison Review Completed: 11/9/2012
Liaison Engineer: TODD M. HERMANN

Submitted for BIIS Processing on: 11/9/2012
BIIS Submission Number: .kp1

Current Status: Keypunched, Sent to BIIS
Check Value: 1,806,050,827

Personnel Present During Inspection:

Peter Riehlman - Team Leader
Rebecca Maurer - Assistant Team Leader

Inspection Date: 9/19/2012 RC: 33 BIN: 1072582

Inspection Access Requirements

Carried: 481I 481I33012107 Crossed: TAFT ROAD CR 18 CheckValue: 1,806,050,827

Equipment Required for Inspection

Access Requirement Changes WERE Noted During This Inspection.
This Listing is from the Inspection.

ACCESS CATEGORIES FOR ENTIRE BRIDGE
Required: Walking

ACCESS CATEGORIES FOR SPAN 1
Required: Walking

Inspection Date: 9/19/2012 RC: 33 BIN: 1072582

Culvert Measurements

Carried: 481I 481I33012107 Crossed: TAFT ROAD CR 18 CheckValue: 1,806,050,827

Culvert Measurements

NO CULVERT DATA FOR BIN 1072582

Standard Photos **RC: 33 BIN: 1072582**

Carried: 481I 481I33012107 Crossed: TAFT ROAD CR 18

1072582_LOCATION_MAP.JPG

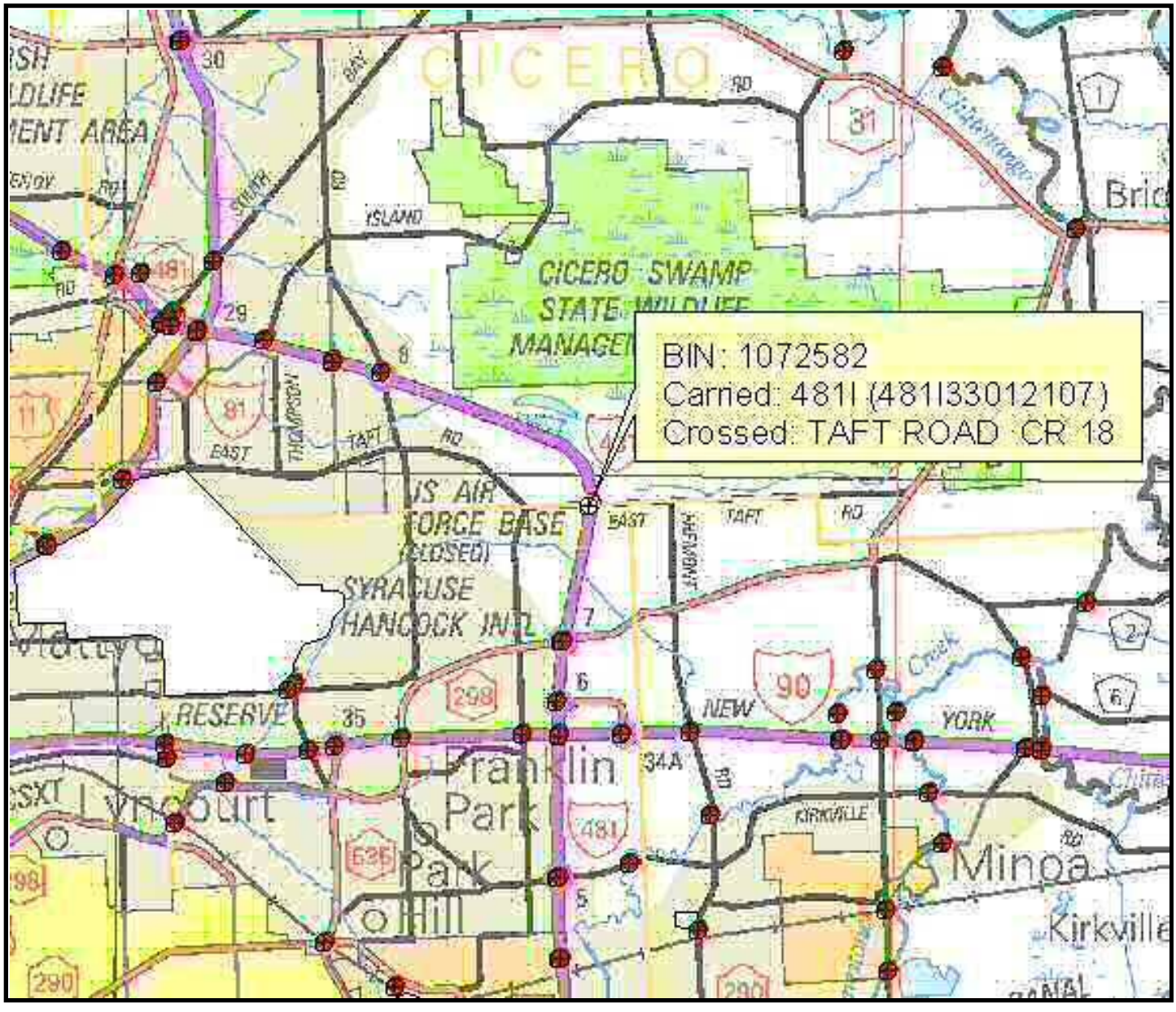

Standard Photos **RC: 33 BIN: 1072582**

Carried: 481I 481I33012107 Crossed: TAFT ROAD CR 18

1072582_QUAD_MAP.JPG

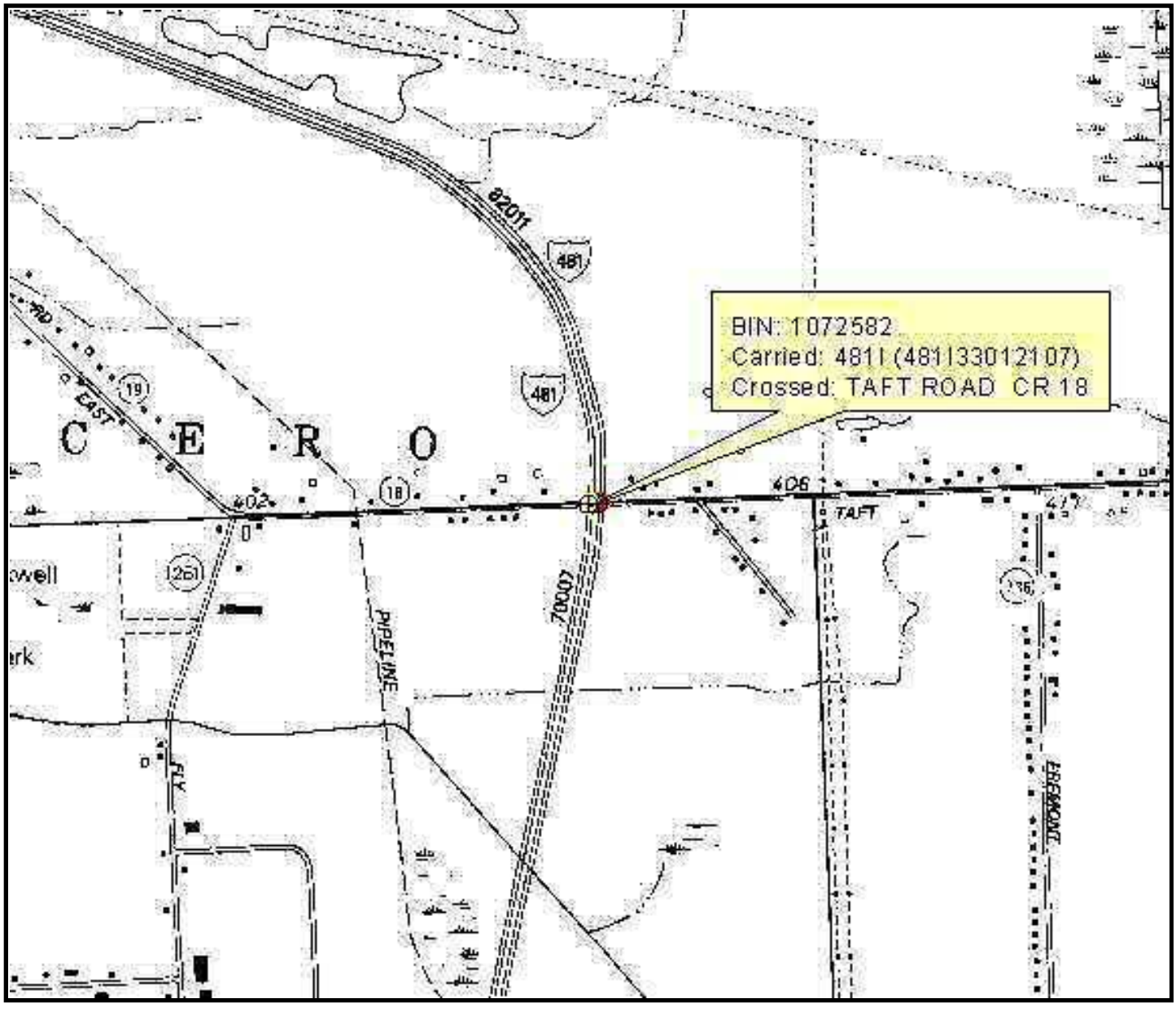

Standard Photos **RC: 33 BIN: 1072582**

Carried: 481l 481l33012107 Crossed: TAFT ROAD CR 18

AbutmentEnd.12.jpg



Standard Photos **RC: 33 BIN: 1072582**

Carried: 481I 481I33012107 Crossed: TAFT ROAD CR 18

ApproachBegin.12.jpg



Standard Photos **RC: 33 BIN: 1072582**

Carried: 481l 481l33012107 Crossed: TAFT ROAD CR 18

ApproachEnd.12.jpg



Standard Photos **RC: 33 BIN: 1072582**

Carried: 481I 481I33012107 Crossed: TAFT ROAD CR 18

ElevationSpan1.12.jpg



Standard Photos **RC: 33 BIN: 1072582**

Carried: 481l 481l33012107 Crossed: TAFT ROAD CR 18

F2CrossedSpan1Left.12.jpg

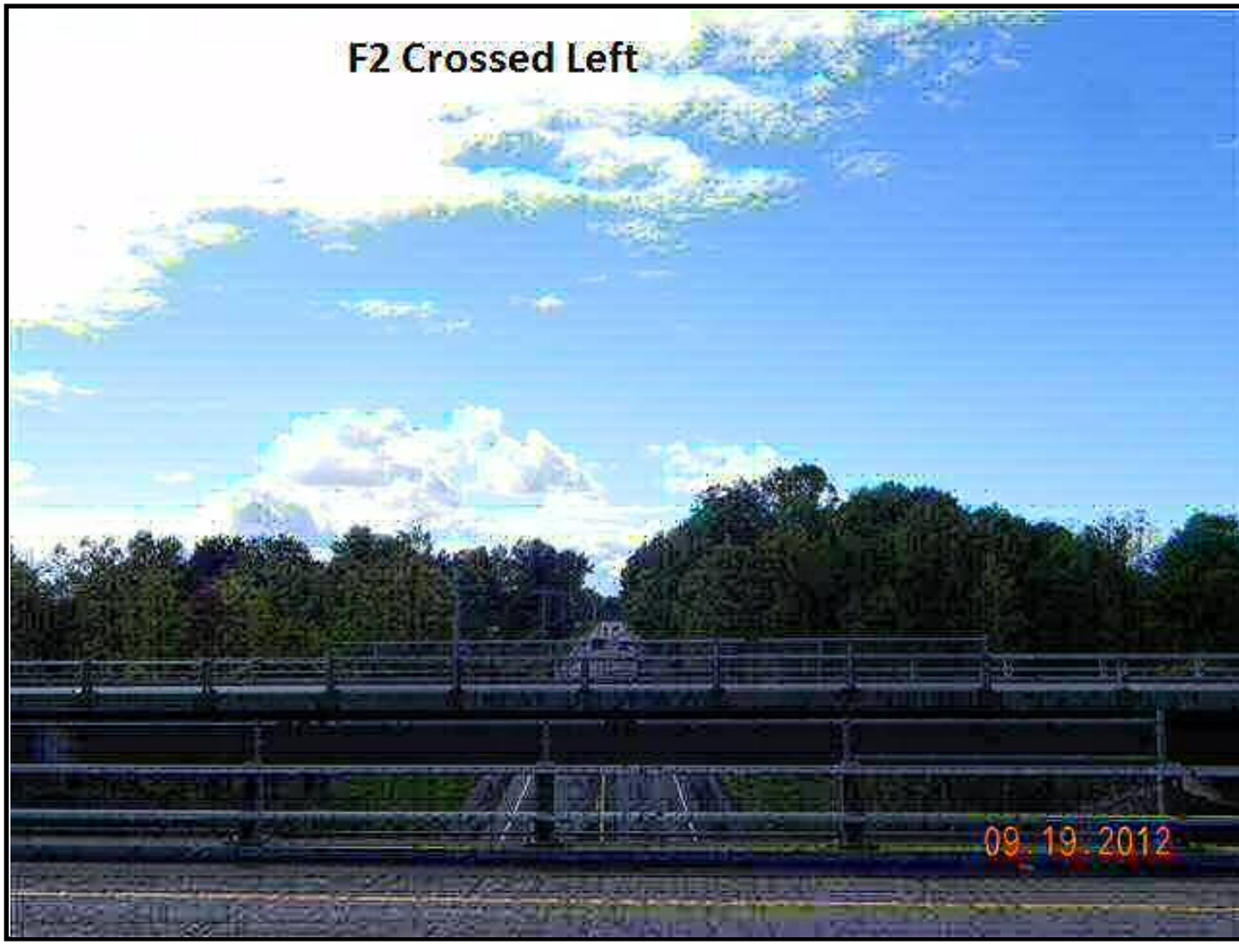

Standard Photos **RC: 33 BIN: 1072582**

Carried: 481I 481I33012107 Crossed: TAFT ROAD CR 18

F2CrossedSpan1Right.12.jpg



Standard Photos **RC: 33 BIN: 1072582**

Carried: 481I 481I33012107 Crossed: TAFT ROAD CR 18

FramingSpan1.12.jpg



LEVEL 1 LOAD RATING SUMMARY SHEET

Region/County Region 3/Onondaga BIN 1072582
Feature(s) Carried and Crossed I-481 NB/Taft Road
Date of field inspection upon which Level 1 rating is based 2/13/2014

OVERALL BRIDGE RATINGS (BASED ON LOWEST RATED ELEMENTS):

Total number of rating units 1

	H inventory	H operating	HS inventory	HS operating
Rating	H 29.69 (tons)	H 49.77 (tons)	HS 50.04 (tons)	HS 83.88 (tons)
Lowest rated element	Exterior Girder G10	Exterior Girder G10	Exterior Girder G10	Exterior Girder G10

Analysis method LFR Comments

Individual Rating Unit Level 1 values:

Rating unit span(s) 1

Main member ratings

	H inventory	H operating	HS inventory	HS operating
Rating	H (tons)	H (tons)	HS (tons)	HS (tons)
Lowest rated element				

Analysis method Comments

Floorbeam ratings

	H inventory	H operating	HS inventory	HS operating
Rating	H (tons)	H (tons)	HS (tons)	HS (tons)
Lowest rated element				

Analysis method Comments

Stringer ratings

	H inventory	H operating	HS inventory	HS operating
Rating	H 29.69 (tons)	H 49.77 (tons)	HS 50.04 (tons)	HS 83.88 (tons)
Lowest rated element	Exterior Girder G10	Exterior Girder G10	Exterior Girder G10	Exterior Girder G10

Analysis method LFR Comments

Certified by Date

Quality Control Engineer Signature Date
Agency or Company represented by certifier

Note:
-If connection ratings govern, record them under stringer ratings for stringer – floorbeam connection, floorbeam ratings for floorbeam-main member connections, etc.
-When Level 1 results indicated the need for load posting or other corrective action, the NYSDOT Regional Structures Engineer shall be notified immediately.
-Load ratings should be filed in the regional office within 60 days of completion of calculations.
-Bridges shall be flagged based on Level I results in accordance with the current NYSDOT flagging procedure.
-Bridge load posting, closure, etc. determinations shall be made as results are being produced.

PARSONS

100 Broadway
New York, NY 10005
Phone: 212-266-8300
Fax: 212-571-6825
www.parsons.com

TECHNICAL MEMORANDUM

FROM: Kian Siang Chau, P.E
NYSPE 082744

DATE: MARCH 20, 2014

RE: SEISMIC SCREENING SUMMARY
NEW YORK STATE DEPARTMENT OF TRANSPORTATION
D031085; PIN 3501.60; I-81

BIN: 1072582 (I-481 NB / Taft Rd)

This memorandum summarizes the seismic screening conducted for BIN 1072582 as part of the Interstate 81 Project in Syracuse, NY. The purpose of the screening is to determine if seismic retrofits are warranted at the superstructure to substructure connection, and if further seismic evaluation of the structure is required. This memorandum will give the screening results, retrofits required and recommendations for further seismic evaluation of the structure.

SCREENING PROCEDURE

The seismic screening was performed in accordance with the FHWA Seismic Retrofitting Manual for Highway Structures: Part 1 - Bridges, January 2006. As per the referenced manual, seismic screenings were performed for both lower level and upper level earthquake ground motion. The lower level earthquake ground motion has a reasonable likelihood of occurrence within the life of the bridge (50% probability of exceedance within a 75 year bridge life). The upper level earthquake ground motion has a finite likelihood of occurrence within the life of the bridge (7% probability of exceedance within a 75 year bridge life).

Values for the spectral acceleration for the Syracuse area used in the screening are as follows:

- Lower Level Earthquake Ground Motion for a Short Period (0.2 seconds): $S_S = 0.0251$
- Lower Level Earthquake Ground Motion for a Long Period (1.0 seconds): $S_1 = 0.0076$
- Upper Level Earthquake Ground Motion for a Short Period (0.2 seconds): $S_S = 0.139$
- Upper Level Earthquake Ground Motion for a Long Period (1.0 seconds): $S_1 = 0.047$

These values are considered constant and are the same for all seismic screenings of bridges in the Syracuse area.

The Site Class is based on the soil conditions at the bridge location. It was determined that this parameter has little effect on the results of the seismic screening because the spectral acceleration values for the Syracuse area are small. Based on this, a site class of D was used for all seismic screenings of bridges in the Syracuse area.

Bridge parameters used in the seismic screening were retrieved from the record drawings and WinBolts data.

The seismic screening takes into account the anticipated service life, importance, and the seismic exposure of the bridge to determine a seismic retrofit category (SRC). The SRC is then used to determine seismic evaluation methods and retrofit measures. There are four SRCs, A through D. Seismic retrofit category A is the lowest category; bridges in this category do not require retrofits or further seismic evaluation. Seismic retrofit category D is the highest category; bridges in this category requiring the most rigorous seismic evaluations and retrofits.

SCREENING RESULTS

The SRC for the bridge is "**C**" for lower level earthquake ground motion and "**B**" for upper level earthquake ground motion.

RETROFITS REQUIRED

No seismic retrofits are required for the bridge superstructure to substructure connection.

RECOMMENDATIONS FOR FURTHER SEISMIC EVALUATION

No further seismic evaluation is required for lower level earthquake ground motion. For the upper level earthquake ground motion, it is recommended that the capacities of the bearings are checked as per Section 5.2 of the referenced manual.

Retrofit cost estimates will be provided after any further required seismic evaluations are completed.

BRIDGE DECK EVALUATION REPORT

RECOMMENDATIONS

The bridge deck inspection findings and evaluation are used as a tool for developing the scope of work and cost estimates for the development and comparison of alternatives for the overall project.

The total damaged area of the deck is 12.3% of the total deck surface area. The cores indicate the reinforcement steel is 2.5 inches to 2.75 inches below the surface of the deck. The lab test indicates that chloride ion concentrations at all the sample locations are significantly higher than the corrosion threshold for steel.

Due to the age, condition and high chloride ion content of the bridge deck concrete, the bridge deck should be rehabilitated or replaced to meet the current standards and to mitigate excessive future maintenance costs.

ALTERNATIVES

- Rehabilitation Alternative - 3 inches Bonded Concrete Overlay
  - Scope

    The scope of this alternative will include the complete removal of the bridge railings, curb and safety walks, and fascias to the level of the original top of the deck. The joint will be removed. The top 2 inches of the entire deck will be removed and areas of deteriorated concrete must be removed to at least 1 inch below the level of the reinforcement steel and to the horizontal and vertical limit of any detectable hollow areas. Additionally, any further areas of deteriorated concrete detected will require full depth removal. Any corrosion of the reinforcement steel will be removed by sandblasting or hydro-blasting. The proposed deck overlay will be a 3 inches thick bonded concrete overlay yielding a nominal 9.5 inches standard thickness deck. A new single-sloped concrete barrier and a new armorless joint will be installed. The Level 1 Load Rating for the final condition was found to be acceptable.

- Useful Life Expectancy

  The removal of the top 2 inches of the existing deck will remove a portion of the deck with high chloride ion concentrations. It can be anticipated that chloride ions will continue to migrate into the remaining deck to the reinforcing steel resulting in further corrosion-related deterioration of the deck surface. Concrete admixtures will be included in the bonded concrete overlay to impede the continued penetration of chloride into the deck from the surface. This alternative will result in an extended useful life expectancy estimated at 20 years.

The design life of the project is 30 years (ETC + 30). This alternative does not meet the project objectives of obtaining 30 years of service life and is not evaluated further.

- Rehabilitation Alternative – 100% Deep Removal and Partial Deck Reconstruction
  - Scope

    The scope of this alternative will include the complete removal of the bridge railings, curb and safety walks, and fascias to the level of the original top of the deck. The joint will be removed. The scope of this alternative will include partial depth reconstruction with removal of the concrete to at least 1 inch below the top mat of the reinforcement steel. Additionally, any further areas of deteriorated concrete detected will require full depth removal. Any corrosion of the reinforcement steel will be removed by sandblasting or hydro-blasting. The proposed deck partial reconstruction will be a nominal 5.75 inches thick concrete deck yielding a 9.5 inches standard thickness deck. A new single-sloped concrete barrier and a new armorless joint will be installed. The Level 1 Load Rating for the final condition was found to be acceptable.
  - Useful Life Expectancy

    This alternative will provide a useful life expectancy is estimated at 35 years.
  - Cost Estimate

    The estimated cost for this alternative is $496,000. The Engineer's Opinion of Probable Construction Cost worksheet is at the end of this section.

- Replacement Alternative – Cast-In-Place Concrete
  - Scope

    This scope of this alternative will include the complete demolition of the existing bridge deck, bridge railings, curb and safety walks, fascias and bridge joint. The bridge deck will be replaced with a new 9.5 inches standard thickness concrete deck. A new single-sloped concrete barrier and a new armorless joint will be installed. The Level 1 Load Rating for the final condition was found to be acceptable.
  - Useful Life Expectancy

    This alternative will provide a useful life expectancy is estimated at 40+ years.
  - Cost Estimate

    The estimated cost for this alternative is $567,000. The Engineer's Opinion of Probable Construction Cost worksheet is at the end of this section.

- Replacement Alternative – Pre-cast Concrete Deck Panels
  - Scope

    The scope of this alternative is similar to the Cast-In-Place Concrete Deck Replacement Alternative except the deck structure will be precast panels. This alternative offers reduced construction time over conventional construction.
  - Useful Life Expectancy

    This alternative will provide a useful life expectancy is estimated at 40+ years.
  - Cost Estimate

    The comparison of accelerated construction to conventional construction is beyond the current scope of this evaluation.

IN-DEPTH INSPECTION REPORT

D031085 P.I.N. 3501.60

ELEMENT SPECIFIC BRIDGE WORK

B.I.N. 1072591

TEAM LEADER Andrew P. Thompson 84914
NYSPE LICENSE #

ASSISTANT TEAM LEADER Mike Savino

FEATURE CARRIED I-481 Southbound

FEATURE CROSSED Northern Blvd.

DATE FIELD WORK BEGAN 12/10/13

DATE FIELD WORK COMPLETED 1/14/14

TABLE OF CONTENTS

- STRUCTURE IDENTIFICATION
- INTRODUCTION
- PROJECT LOCATION MAP
- IN-DEPTH CONDITION DOCUMENTATION
- PLANS & SKETCHES
- IN-DEPTH PHOTO DOCUMENTATION
- ASBESTOS SAMPLING SURVEY
- LATEST BIENNIAL INSPECTION REPORT

STRUCTURE IDENTIFICATION

a. Bridge Identification Number (BIN): 1072591
b. Reference Marker: 481I 3301 2128
c. Region: NYSDOT Region 3
d. County: Onondaga
e. Town: Cicero
f. Feature Carried: I-481 Southbound
g. Feature Crossed: Northern Blvd. CR82

INTRODUCTION

a. Bridge History
   i. Year Built: 1986
   ii. Bridge Type: Single Span Steel, Multi-girder
   iii. Span Length: 191 feet
   iv. Out-to-Out Width: 42 feet
   v. Structural Ratings and Rankings
      1. Federal Sufficiency: 87.2 (May 2012)
      2. Condition Rating: 5.281 (May 2012)
      3. General Recommendation: 6
   vi. Live Load Posting (HS25): No
   vii. National Highway System (NHS): Yes
   viii. Previous work Done: Waterproof bridge deck (1999). Repair abutments & wingwalls (2007). Maintain & repair structural bridge deck (2007,2008). Remove and replace wearing surface (2007).
   ix. Planned Future Work: N/A
b. Highway Classification
   i. Functional Classification: Urban Principle Arterial - Interstate
   ii. Traffic Volumes

YEAR	AADT Projected
2014	36037
2034	53549
2054	79572

   iii. Plan for Maintenance and Protection of Traffic:
   Maintenance and Protection of traffic will be achieved by staged construction.

PROJECT LOCATION MAP

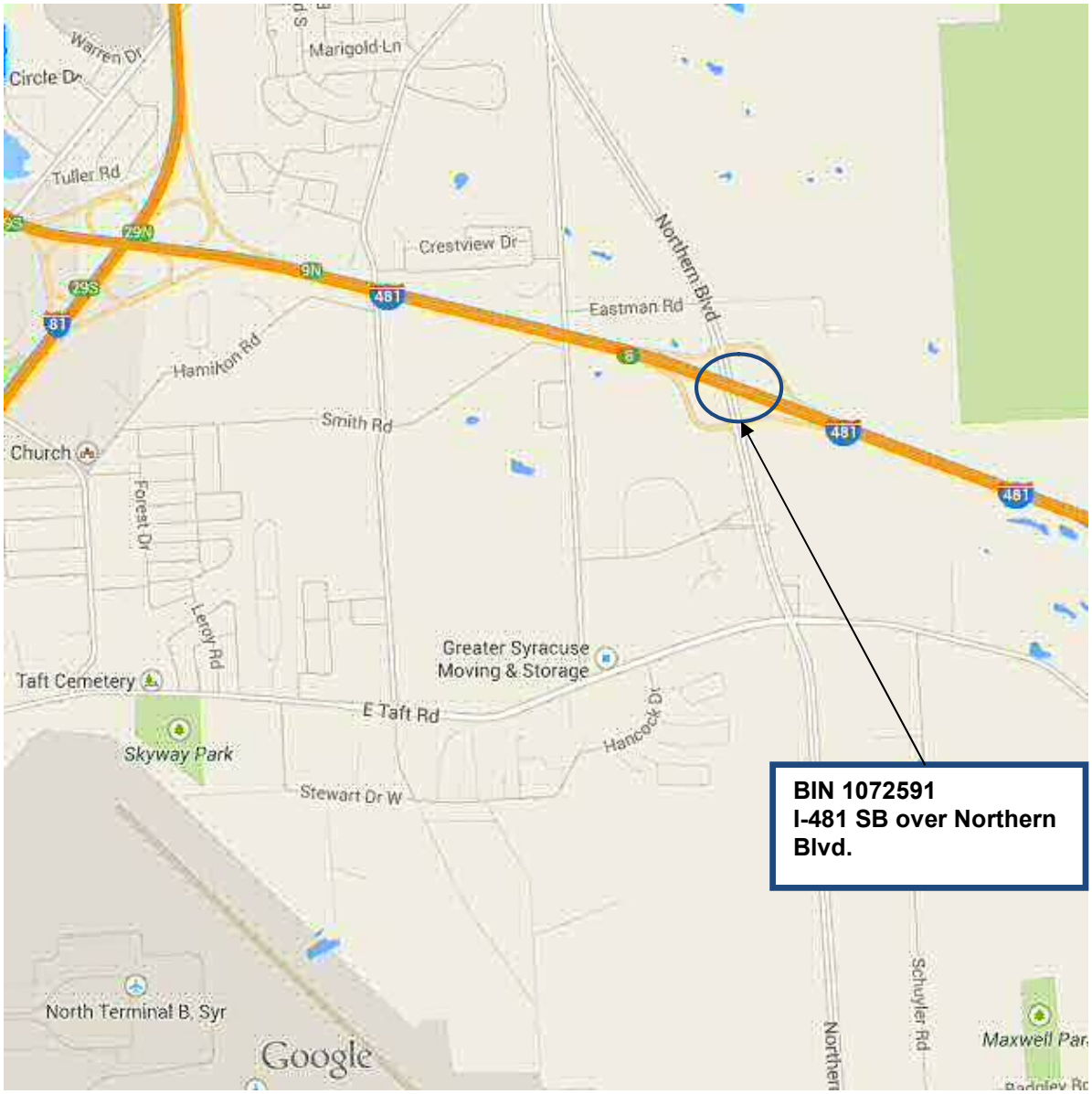

IN-DEPTH CONDITION DOCUMENTATION

NYS DEPT. OF TRANSPORTATION BRIDGE **BIN** 1072591 **SHEET:** 1 **OF** 4 **DATE:** 1/14/2014

FEATURE CARRIED: I-481 SB
FEATURE CROSSED: NORTHERN BLVD.

TEAM LEADER: A.THOMPSON
A. TEAM LEADER: M. SAVINO

ITEM	REMARKS	PHOTO N0.
TP 349-22	Begin Abutment - Joint with Deck: The previously spalled begin concrete header has been recently repaired with concrete patching material and is in good condition (Photo 1). The seal is partially torn in the right lane for most of its length. Underneath, the steel rod shaped armor material to the end of the compression seal is detached (Photo 2). Rust staining and other signs of recent leakage were noted.	1,2
TP 349-23	End Abutment - Joint with Deck: The seal is partially detached from the end angle in the left lane and appears detached sporadically throughout (Photo 3). The end header is spalled for the right 1' (Photo 4) and for an 8" x 2' wide triangular area at the left (Photo 5). The armor angles and the remainder of the headers are in good condition. Rust staining and recent leakage was noted underneath (Photo 6).	3-6
TP 349-24	Begin Abutment – Bearings: The begin abutment has expansion high rocker type bearings. Bearing 1 was under extended +/-1.5” at 28 degrees F (Photo 7). The 2012 inspection report indicates it was under extended 3” at 60 degrees F. The remainder of the bearings are in a position close to neutral. No other defects were noted.	7
TP 349-26	Begin Abutment – Seats and Pedestals The front left corner of Pedestal 1 has a 1 sf cracked hollow area (Photo 8). Most of the seat at the left has hairline cracking with no hollowness. The remainder of the pedestals have hairline cracking on their vertical faces with no hollowness (Photo 9). The seat at the right has a 2” deep x 10” wide x full length spall with surrounding concrete loose (Photo 9).	8,9
TP 349-27	End Abutment – Seats and Pedestals The back +/-1’ of all pedestals is stained and hollow sounding (Photo 6). The front 4” to 8” of the seat in Bay 1 is cracked and hollow for a width of 3.5’ (Photo 10). The seat at the left has a 1 sf hollow area with light spalling (Photo 11).	6,10,11
TP 349-28	Begin Abutment – Backwall The backwall at the top left has a 0.5 sf x 1” deep spall with no exposed rebar (Photo 12). The remainder of the backwall has moderate hairline cracking and rust staining with active leakage (Photos 7-9). Conditions are more severe at both ends.	7-9 12
TP 349-29	End Abutment – Backwall The backwall at the top left has 1 sf x 2” deep spall with 2 sf of hollowness surrounding it (Photo 13). No exposed rebar was noted. The remainder of the backwall has moderate hairline cracking and rust staining with active leakage. Conditions are more severe at both ends.	13

FEATURE CARRIED: I-481 SB
FEATURE CROSSED: NORTHERN BLVD.

TEAM LEADER: A.THOMPSON
A. TEAM LEADER: M. SAVINO

ITEM	REMARKS	PHOTO N0.
TP 349-30	Begin Abutment – Stem The begin stem has several hollow areas throughout (Photo 14). Two 2” deep spalls were found. The sum of the hollow and spalled areas is 86 sf or 16% of the stem face. These conditions are detailed on the Abutment Deterioration Sketch.	14
TP 349-31	End Abutment – Stem There is a full height x 1’-2” wide x 4” deep max. spall at the right with exposed rebar (Photo 15). The concrete in the spall is soft and there is an adjacent 2’ wide hollow area. There is a 5’ high, 8 sf hollow area located 3.5’ from the left (Photo 16). At the top of the stem there is a 0.5 sf hollow area between Pedestals 1 and 2 (Photo 10). The remainder of the stem has isolated hairline cracking and is in good condition.	10,15 16
TP 350-20	Deck Elements - Curbs: The left granite curb has some mortar loss but is solid and in place. The first 1' of the right granite curb has detached from the rest of the section but has not displaced (Photo 17). There are (2) 6' sections which have displaced inward at their begin ends. The section starting 49' from the begin has displaced 1.5" (Photo 18), and the section starting at 61' from the begin has displaced 2" (Photo 19). The remainder of the right curb has some mortar loss but is in place and solid.	17-19
TP 350-21	Deck Elements - Sidewalks/Fascias: Sidewalks: The first 24' of the left safety walk is moderately map cracked (Photo 20). It has a full width x 3" spall at the begin with loose concrete surrounding it (Photo 21). The entire right safety walk has light map cracking (Photos 18 and 19). There is a triangular patch at the begin which is in good condition (Photo 17). Fascias: Both fascias have map cracking throughout with no spalling or hollow sounding areas (Photo 22). There are longitudinal cracks at the bottom under the rail posts (Photo 23). The cracks are 1/32” wide max and 2.5’ long max. There are 2 locations of light scaling to the begin of Post 3 on the left 18” long x 3” high and 6” long x 2” high (Photo 24).	17-21 22-24

ITEM	REMARKS	PHOTO N0.
TP 350-22	Deck Elements - Railings/Parapets: The bridge railing and posts are in good condition. Snow fencing is present over the travel lanes on both sides of the bridge. The snow fence consists of 14 steel pipe posts (located at rail posts), steel pipe rails, and chain link fencing. On the left the bottom pipe rails at Posts 2, 3, 6 - 11, and 13 are rusted through and detached on one or both sides (Photo 25 typ.). The bottom rails at Posts 4, 5, and 12 are rusted but intact. On the right the bottom pipe rails at Posts 2, 4, 6, 8, 10, and 13 are rusted through and detached on one or both sides. The bottom rails at Posts 3, 5, 7, 9, 11, and 12 are rusted but intact. The remainder of the snow fencing is in good condition.	25
TP 350-27	Superstructure – Structural Deck The structural deck is an 8.5" thick concrete mono deck with SIP forms. The right lane is in good condition except for a 1' x 1' hollow area near the end at the left. The left lane has areas of hollowness including a 24 sf area near the end right (Photos 26 and 27). There are also 2 patches which are in good condition. See Deck Deterioration Plan. The underside has SIP forms and is exposed only at the overhangs (Photo 28). The SIP forms are in good condition. Both overhangs have map cracking and transverse hairline cracking throughout (Photo 29).	26-29
TP 350-30	Superstructure – Paint The girders are made of weathering steel and form a protective coating. Fascia girder G1 is losing its coating in the form of small flakes on the underside of its bottom flange (Photo 30). Fascia girder G5 on the underside of its bottom flange is similar but more severe with medium sized flakes (Photo 31). The outside face of its web is also losing its coating in the form of medium sized flakes (Photo 32). The remainder of the steel surfaces has only minor peppering with flaking at the girder ends (Photo 28).	28 30-32

NYS DEPT. OF
TRANSPORTATION BRIDGE

BIN 1072591

SHEET: 4 OF 4
DATE: 1/14/2014

FEATURE CARRIED: I-481 SB
FEATURE CROSSED: NORTHERN BLVD.

TEAM LEADER: A.THOMPSON
A. TEAM LEADER: M. SAVINO

ITEM	REMARKS	PHOTO N0.
	Special Emphasis Inspection Required Non-Redundant/Fracture Critical Members - No Pin and Hangers - No Fatigue-Prone Welds - No Non-Categorized Fatigue-Prone Details - No Other - No	

PLANS & SKETCHES

D250416

FED. RD. REG. NO.	STATE	FEDERAL AID PROJECT NO.	SHEET NO.	TOTAL SHEETS
	NEW YORK	I-481-2(154)	204	380

INTERSTATE RTE. 570 EXTENSION (I-481)
NORTHERN BLVD. TO BEAR ROAD INTERCHANGE
ONONDAGA COUNTY

CAPITAL PROJECT IDENTIFICATION NO. 3107.00(01)

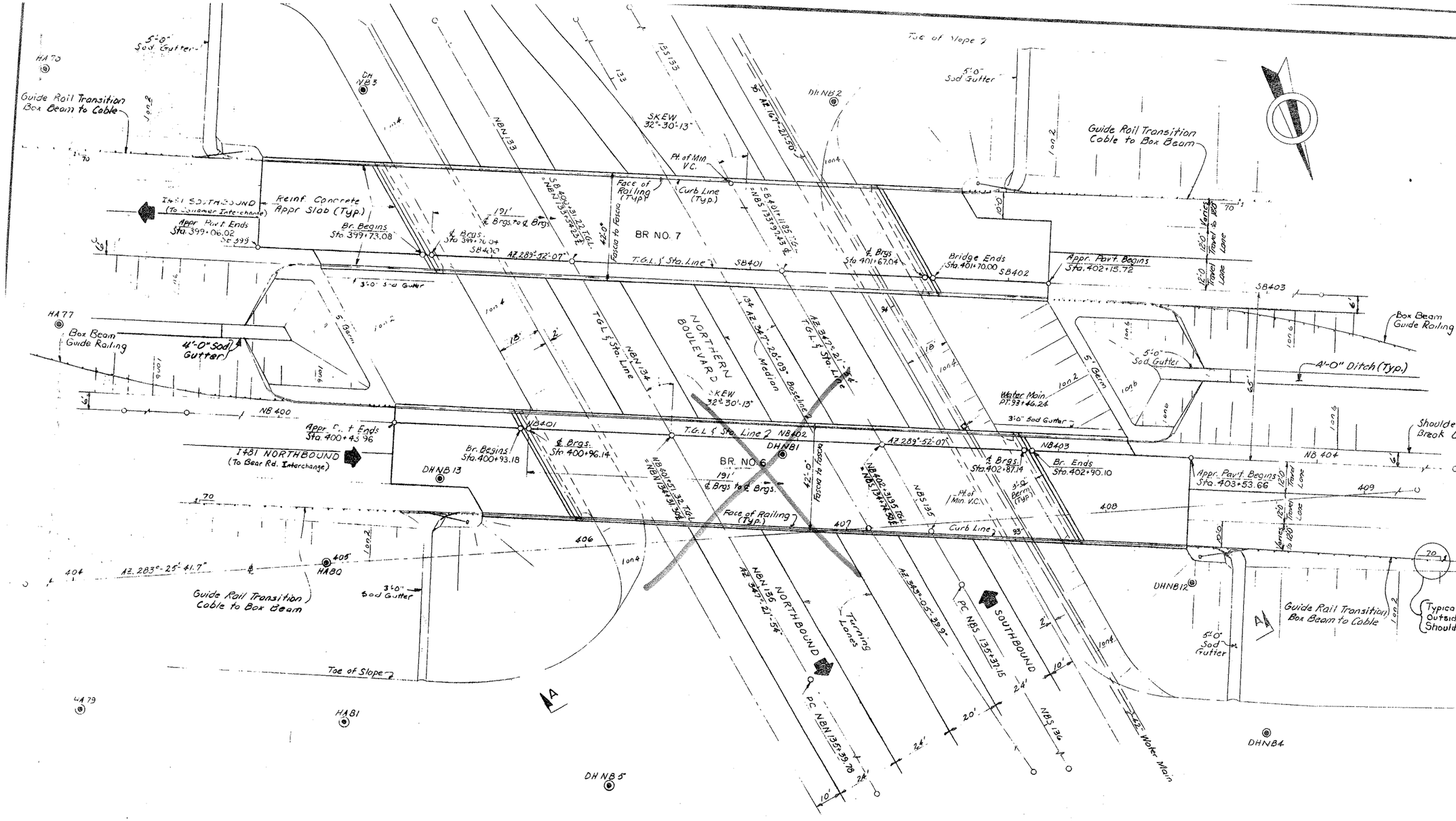

PLAN
Scale: 1"=20'

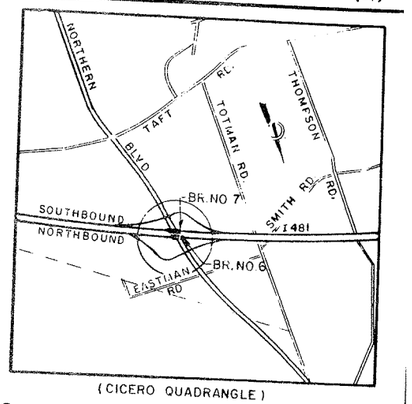

(CICERO QUADRANGLE)
LOCATION MAP
SCALE 1"=2000'

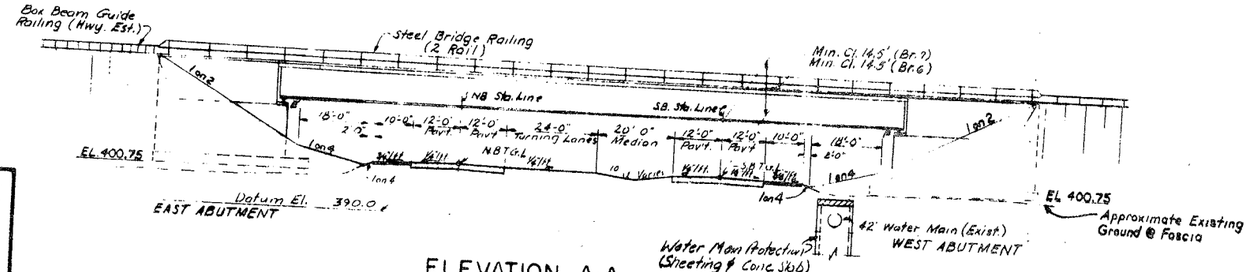

ELEVATION A-A
Scale: 1"=20'

BIN 1072591(Br. 7) &	BIN 1072592(Br. 6)
INVENTORY RATING	OPERATING RATING
HS 26(47T)(W.S.)	HS 56(101T)(W.S.)

The ratings shown are based on the use of the Type 2 Form System - see Dwg. No. 23 of 38.

Indicates Borings
(DH Indicates Drill Hole)
(HA Indicates Hand Auger)

STATE OF NEW YORK
DEPARTMENT OF TRANSPORTATION
DIVISION OF CONSTRUCTION

1072592 1072591

Bridges 6 & 7 over Northern Blvd.

PLAN & ELEVATION

BIN 1072591
Date —
Team Leader

Peter Riehlman 11/16/88
P.J.R. 10/90
Opalka 10/25/94
Douglas L Hillage 10/9/96
R. Engle 10-13-98
Bruce Opalka 10/18/
Henry W Cook 07
B Opalka 6/22/
Henry W Cook 6/
Henry W Cook 05
DJ Hann 5/3/10

MADE
ECT ENGINEER
ARGE OF
ED BY
N CHECKED BY
LED BY
L CHECKED BY

D250416

FED. RD. PROJ. NO.	STATE	FEDERAL AID PROJECT NO.	SHEET NO.	TOTAL SHEETS
	NEW YORK	I-481-2(154) I-81-2(154)	227	31

INTERSTATE RTE. 570 EXTENSION (I-481)
NORTHERN BLVD. TO BEAR ROAD INTERCHANGE
ONONDAGA COUNTY

CAPITAL PROJECT IDENTIFICATION NO. 3107.00(01)

All structural steel shall be ASTM A588, unpainted

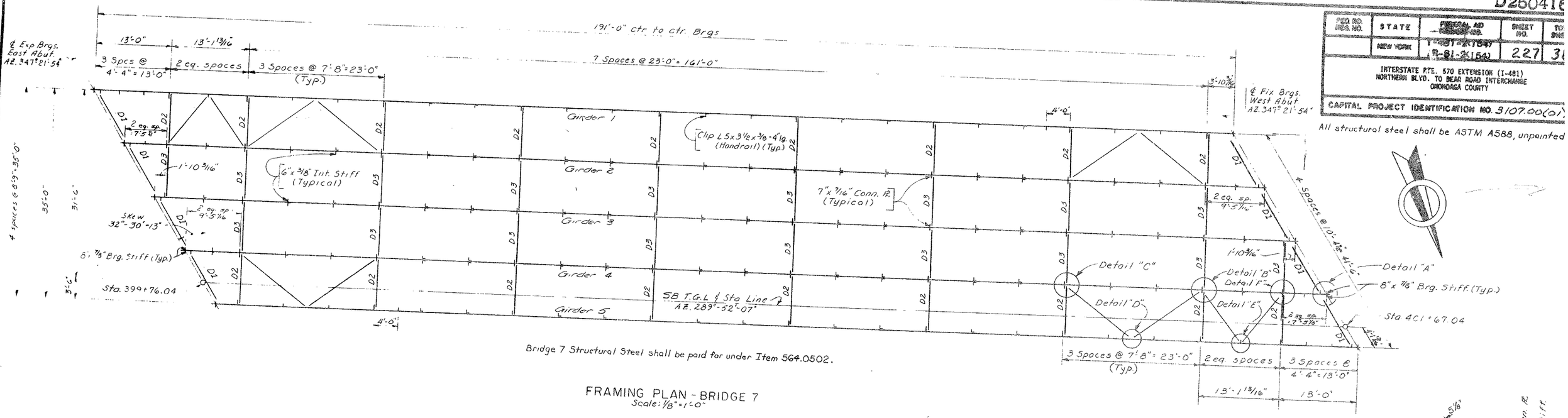

Bridge 7 Structural Steel shall be paid for under Item 564.0502.

FRAMING PLAN - BRIDGE 7
Scale: 1/8" = 1'-0"

For placement of Intermediate Stiffeners and Clip Ls (Bridge 6), see Bridge 7 Framing Plan.

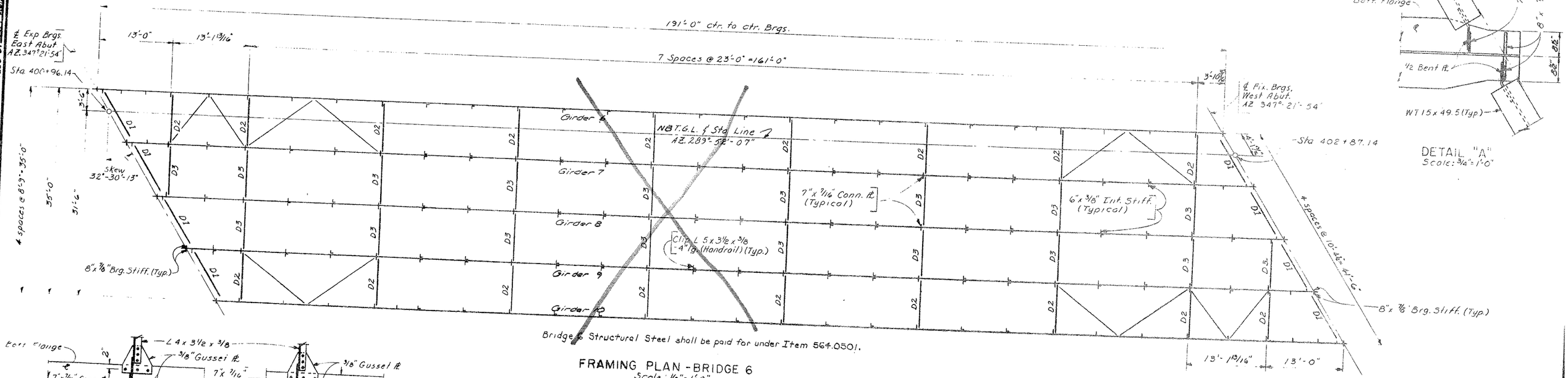

Bridge 6 Structural Steel shall be paid for under Item 564.0501.

FRAMING PLAN - BRIDGE 6
Scale: 1/8" = 1'-0"

DETAIL "A"
Scale: 3/4" = 1'-0"

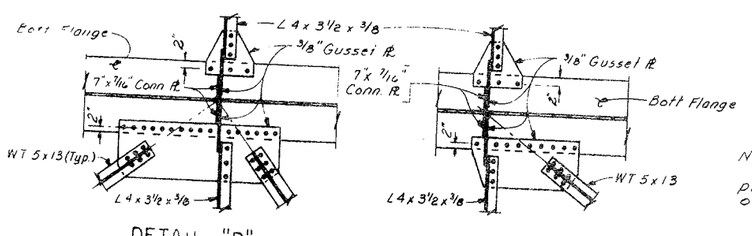

DETAIL "B"

DETAIL "C"

Note:
All bolt heads shall be placed on the underside of bottom flange.

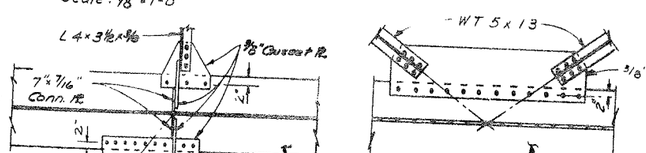

STATE OF NEW YORK
DEPARTMENT OF TRANSPORTATION
DIVISION OF DESIGN AND CONSTRUCTION

Bridges 6 & 7 over Northern Blvd.

DETAILED BY DRH/WRW
DESIGN CHECKED BY
DETAIL CHECKED BY

D250416

FED. RD. REG. NO.	STATE	FEDERAL AID PROJECT NO.	SHEET NO.	TOTAL SHEETS
	NEW YORK	IR-81-3(154)	228	380

INTERSTATE RTE. 570 EXTENSION (I-481)
NORTHERN BLVD. TO BEAR ROAD INTERCHANGE
ONONDAGA COUNTY

CAPITAL PROJECT IDENTIFICATION NO. 3107.00(01)

CONCRETE TABLE		
POUR	ITEM 5555.04	ITEM 555.01
SLAB	8156 S.F.	
NORTH CURB OVERLAY		3.67 C.Y.
SOUTH CURB OVERLAY		3.67 C.Y.

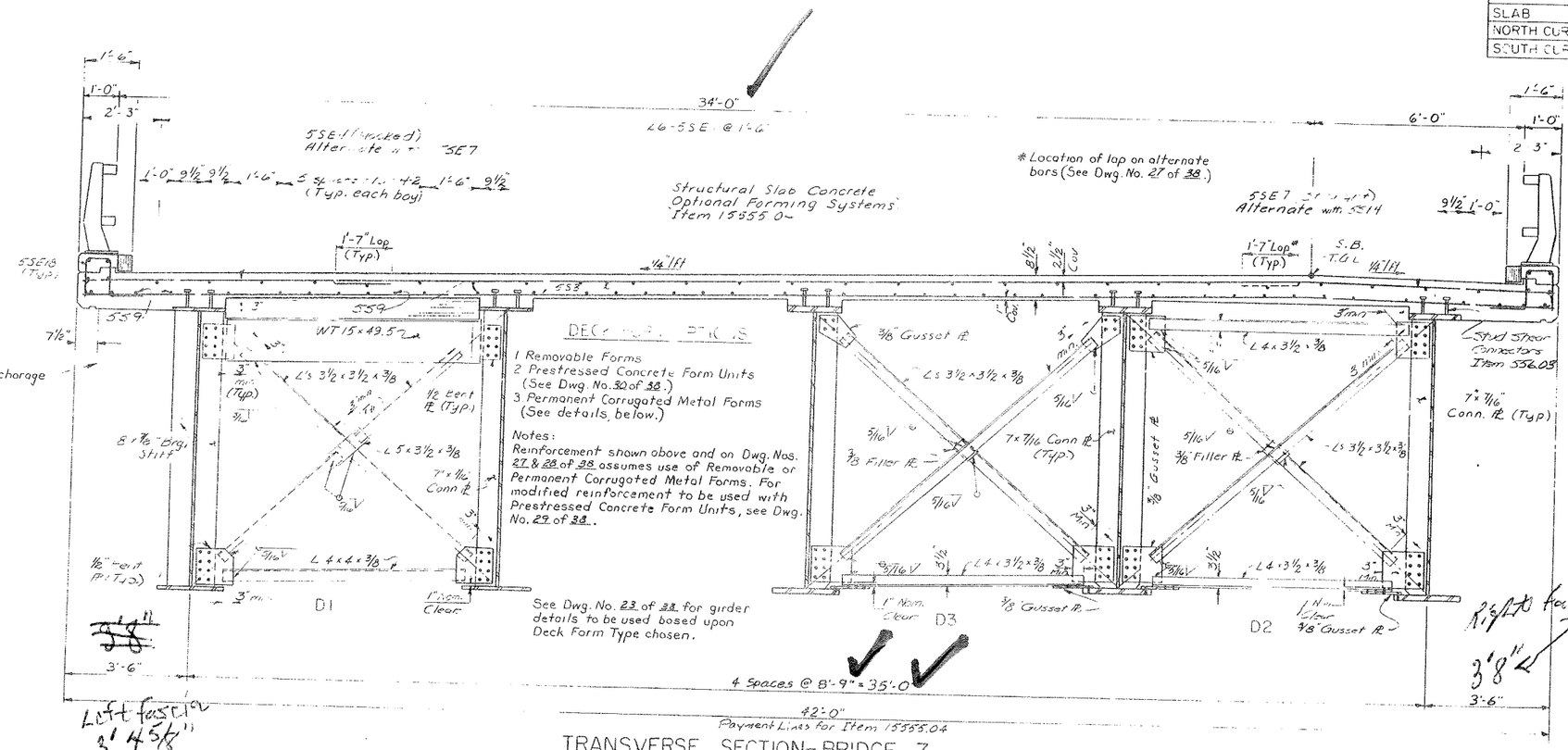

TRANSVERSE SECTION - BRIDGE 7
Scale: ½" = 1'-0"

DECK FORM OPTIONS

1. Removable Forms
2. Prestressed Concrete Form Units (See Dwg. No. 30 of 38.)
3. Permanent Corrugated Metal Forms (See details below.)

Notes:
Reinforcement shown above and on Dwg. Nos. 27 & 28 of 38 assumes use of Removable or Permanent Corrugated Metal Forms. For modified reinforcement to be used with Prestressed Concrete Form Units, see Dwg. No. 29 of 38.

See Dwg. No. 23 of 38 for girder details to be used based upon Deck Form Type chosen.

DIAPHRAGM NOTES

Where holes are indicated, connections shall be made with 7/8" diameter high-strength bolts.

Cross frames may be fabricated to fit the girders in their erected position and cambered shape, but deflected vertically due to steel dead load only.

The contractor may place diaphragms on either side of the bearing stiffeners or stiffener connection plates as necessary to correct alignment provided there will be no inteference with other structural details.

Tapered or flat shim plates may be used in the connection between skewed diaphragms and the bearing stiffeners or stiffener connection plates. Variable thicknesses of shim plates may be used. The minimum thickness of shim plate shall be 1/8" with a maximum number of three shim plates permitted at any connection. The total thickness of all shim plates used at any connection shall not exceed 1". Shim plates shall have the dimensions of the faying surface. The shim material shall conform to ASTM Designation A36, except that on unpainted structures, the shim material shall conform to ASTM Designation A588. No additional payment will be made for furnishing and placing the shim plates.

FASCIAE AVERAGE OUT TO 3'-6" (USE MAX)

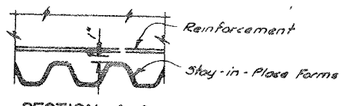

SECTION A-A
Not to Scale

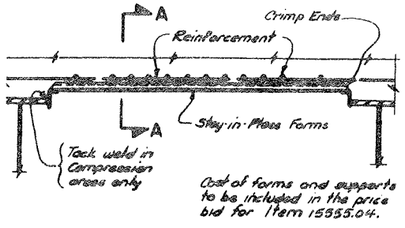

PERMANENT CORRUGATED METAL FORMS
(SEE "DECK FORM OPTIONS" NOTE, ABOVE)
Not to Scale

Note: Haunch Table is based upon use of the girder which would be used with Deck Form Type 2. (See Girder Table Dwg. No. 23 of 38.)

HAUNCH TABLE
BRIDGE 7

		℄ Brg.	0.1L	0.2L	0.3L	0.4L	0.5L	0.6L	0.7L	0.8L	0.9L	℄ Brg.
Girder 1	(A) Reqd. bottom of slab elevation	426.11	426.09	426.05	426.00	425.95	425.88	425.79	425.70	425.59	425.48	425.35
	(B) Top of steel El. (Field meas.)											
	(C) = (A) - (B)											
	(D) Concrete + S.D.L. Deflection	0	0.17	0.31	0.43	0.50	0.52	0.50	0.43	0.31	0.17	0
	(E) Depth of haunch reqd. = (C) + (D) Ft.											
Girder 2	(A) Reqd. bottom of slab elevation	426.29	426.26	426.22	426.17	426.11	426.03	425.95	425.85	425.74	425.62	425.49
	(B) Top of steel El. (Field meas.)											
	(C) = (A) - (B)											
	(D) Concrete + S.D.L. Deflection	0	0.17	0.31	0.43	0.50	0.52	0.50	0.43	0.31	0.17	0
	(E) Depth of haunch reqd. = (C) + (D) Ft.											
Girder 3	(A) Reqd. bottom of slab elevation	426.46	426.43	426.39	426.34	426.27	426.19	426.10	426.00	425.89	425.77	425.63
	(B) Top of steel El. (Field meas.)											
	(C) = (A) - (B)											
	(D) Concrete + S.D.L. Deflection	0	0.17	0.31	0.43	0.50	0.52	0.50	0.43	0.31	0.17	0
	(E) Depth of haunch reqd. = (C) + (D) Ft.											
Girder 4	(A) Reqd. bottom of slab elevation	426.64	426.60	426.56	426.50	426.43	426.35	426.26	426.15	426.04	425.91	425.77
	(B) Top of steel El. (Field meas.)											
	(C) = (A) - (B)											
	(D) Concrete + S.D.L. Deflection	0	0.17	0.31	0.43	0.50	0.52	0.50	0.43	0.31	0.17	0
	(E) Depth of haunch reqd. = (C) + (D) Ft.											
Girder 5	(A) Reqd. bottom of slab elevation	426.67	426.63	426.58	426.52	426.45	426.36	426.27	426.16	426.04	425.91	425.76
	(B) Top of steel El. (Field meas.)											
	(C) = (A) - (B)											
	(D) Concrete + S.D.L. Deflection	0	0.17	0.31	0.43	0.50	0.52	0.50	0.43	0.31	0.17	0
	(E) Depth of haunch reqd. = (C) + (D) Ft.											

NOTE: Computations in the Haunch Table shall be algebraic.
Haunch Table is based upon use of the girder which would be used with Deck Form Type 2 (See Girder Table; Dwg. No. 23 of 38.)

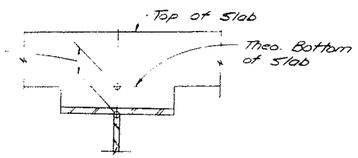

HAUNCH DETAIL
Scale: 1" = 1'-0

All structural steel shall be ASTM A588 unpainted

See enlarged Fascia Detail on Dwg. No 26 of 38.

For details of Stone Curb, see Common Details; Dwg. No. 6 of 16.

For details of Steel Bridge Railing (Two Rail), see Common Details; Dwg. No. 7 of 16.

For details of Stud Shear Connectors, see Common Details; Dwg. No. 5 of 16.

For additional reinforcement details, see Dwg. Nos. 27 & 28 of 38.

STATE OF NEW YORK
DEPARTMENT OF TRANSPORTATION
DIVISION OF DESIGN AND CONSTRUCTION

Bridge 7 over Northern Blvd.

TRANSVERSE SECTION & HAUNCH TABLE BRIDGE 7

PROJ. ENG. E.L. Gamm
DATE MADE
CHECKED A.A.Z.
DRAWING NO. 25 of 38

D (7/80)

BIN: 1072591
I481 SB / Northern Blvd

DECK DETERIORATION PLAN

NOT TO SCALE

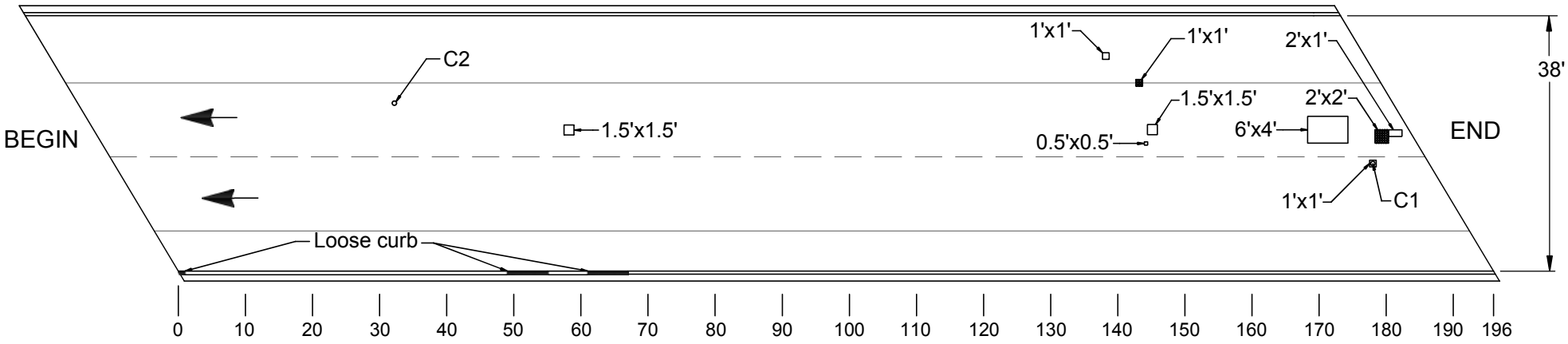

TOTAL DAMAGED AREA EQUALS 32.75 SF WHICH IS 0.5% OF DECK SURFACE

LEGEND

- Hollow Concrete
- Patch
- Coring location
- Crack

BIN: 1072591
I-481 SB / NORTHERN BLVD.

ABUTMENT DETERIORATION SKETCH

NOT TO SCALE

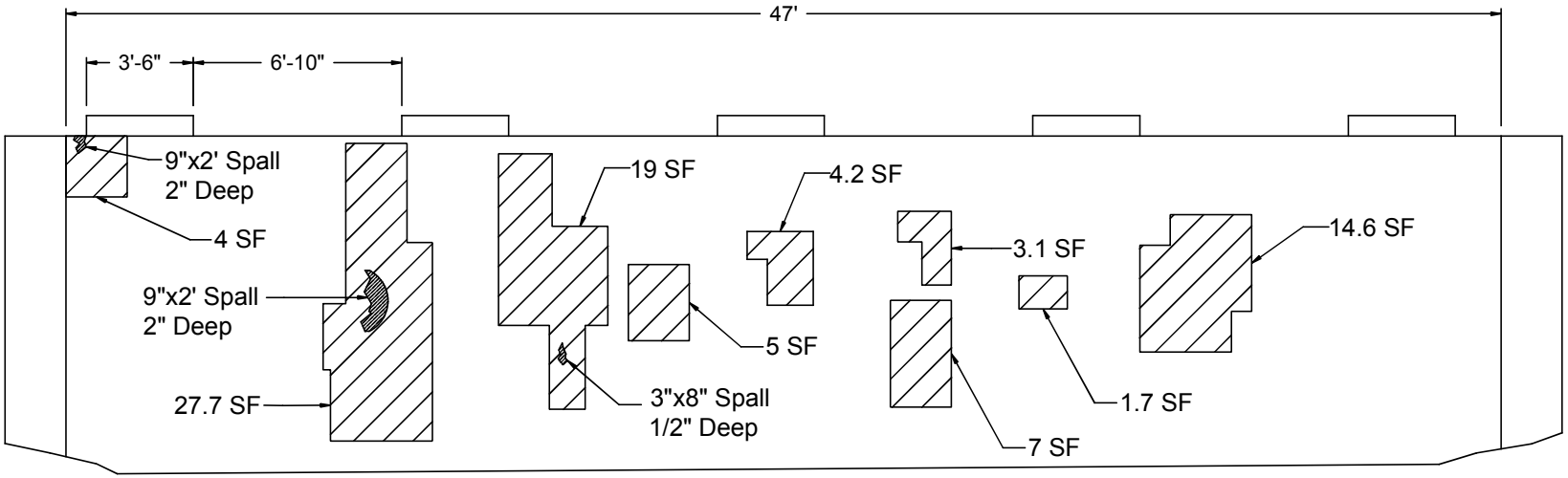

BEGIN ABUTMENT

LEGEND

HOLLOW CONCRETE

SPALL

IN-DEPTH PHOTO DOCUMENTATION

BIN: 1072591
I481 SB / Northern Blvd

IN-DEPTH INSPECTION
PHOTO LOCATION PLAN

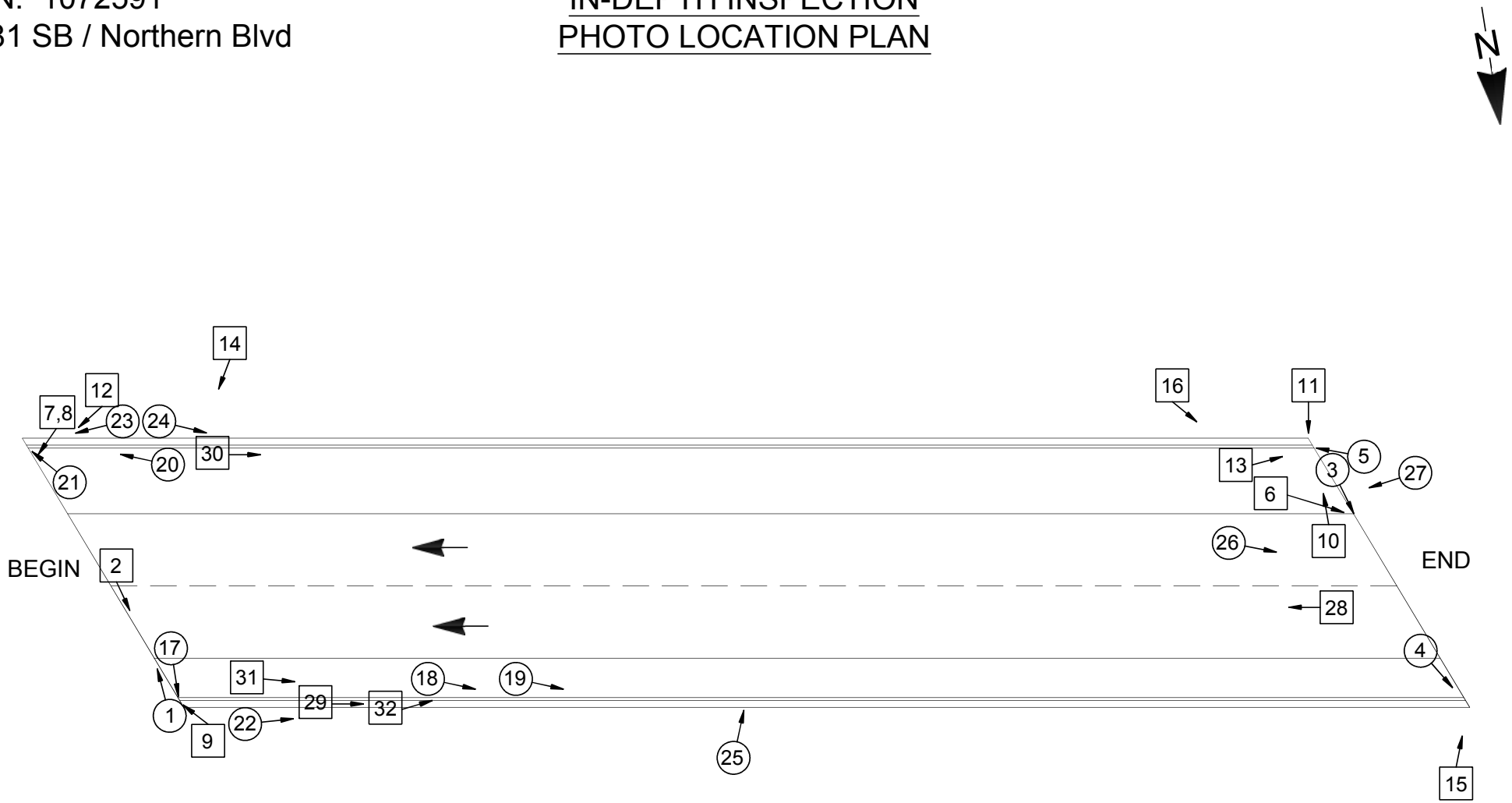

LEGEND	
(XX)	Photo Above Deck
[XX]	Photo Below Deck

In-Depth Inspection Photos I-481 SB over Northern Blvd., BIN 1072591



DESCRIPTION: RIGHT LANE BEGIN JOINT (R-L)

PHOTO 1



DESCRIPTION: BEGIN JOINT & BACKWALL (L-R)

PHOTO 2



DESCRIPTION: LEFT LANE END JOINT (L-R)

PHOTO 3



DESCRIPTION: END RIGHT JOINT HEADER

PHOTO 4



DESCRIPTION: END LEFT JOINT & SAFETYWALK

PHOTO 5



DESCRIPTION: END PEDESTAL 2

PHOTO 6



DESCRIPTION: BEGIN BEARING 1 FROM LEFT

PHOTO 7



DESCRIPTION: BEGIN LEFT SEAT

PHOTO 8



DESCRIPTION: BEGIN RIGHT SEAT AND PEDESTAL 1

PHOTO 9



DESCRIPTION: END SEAT IN BAY 1 (R-L)

PHOTO 10



DESCRIPTION: END LEFT SEAT

PHOTO 11



DESCRIPTION: BEGIN LEFT BACKWALL

PHOTO 12



DESCRIPTION: END LEFT BACKWALL

PHOTO 13



DESCRIPTION: BEGIN ABUTMENT

PHOTO 14



DESCRIPTION: END RIGHT STEM

PHOTO 15



DESCRIPTION: END ABUTMENT

PHOTO 16



DESCRIPTION: BEGIN RIGHT CURB & SAFETYWALK

PHOTO 17



DESCRIPTION: RIGHT CURB AT 49’

PHOTO 18



DESCRIPTION: RIGHT CURB AT 61’

PHOTO 19



DESCRIPTION: LEFT SAFETYWALK AT 12’ (E-B)

PHOTO 20



DESCRIPTION: BEGIN LEFT SAFETYWALK

PHOTO 21



DESCRIPTION: RIGHT FASCIA (B-E)

PHOTO 22



DESCRIPTION: LEFT FASCIA AT RAIL POST 1

PHOTO 23



DESCRIPTION: LEFT FASCIA AT RAIL POST 3

PHOTO 24



DESCRIPTION: RIGHT SNOW FENCE AT RAIL POST 9

PHOTO 25



DESCRIPTION: DECK AT END

PHOTO 26



DESCRIPTION: DECK (E-B)

PHOTO 27



DESCRIPTION: BAY 3 (E-B)

PHOTO 28



DESCRIPTION: RIGHT OVERHANG (B-E)

PHOTO 29



DESCRIPTION: G1 BOTTOM FLANGE (B-E)

PHOTO 30



DESCRIPTION: G5 BOTTOM FLANGE (B-E)

PHOTO 31



DESCRIPTION: G5 RIGHT SIDE (B-E)

PHOTO 32

ASBESTOS SAMPLING SURVEY

LATEST BIENNIAL INSPECTION REPORT

Inspection Date: 5/4/2012 RC: 33 BIN: 1072591

Bridge Ratings

Carried: 481I 481I33012128 Crossed: NORTHRN BLVD CR82 CheckValue: 1,792,346,961

Inspection Agency: 10 - NYSDOT Type of Inspection: 1 - BIENNIAL
GTMS: A02 -- Unpainted Steel - Stringer/Multi-Beam or Girder
POSTINGS: See Gen Rec Page 1 for Postings at time of inspection.
Further Investigation Needed: No
State Highway Number: 70-7 Milepoint: 14.98 AADT/Yr: 11858 / 2002
Orientation: 8 - Northwest Political Unit: 0161 - Town of CICERO Year Built: 1986
Total Spans: 1 Ramp Bridge Attached To Span: NA BIN: NA
General Recommendation: 6 Computed Condition Rating: 5.281

Abutment Ratings:	**Beg Abut**	**End Abut**
Joint with Deck	4	5
Bearings, Bolts, Pads	5	5
Seats and Pedestals	5	5
Backwall	5	5
Stem (Breastwall)	5	5
Erosion or Scour	6	6
Footings	9	9
Piles	8	8
Recommendation	5	5

Wingwall Ratings:	**Beg Abut**	**End Abut**
Walls	5	6
Footings	9	9
Erosion or Scour	6	6
Piles	8	8

Channel Ratings:	**Channel**
Stream Alignment	8
Erosion and Scour	8
Waterway Opening	8
Bank Protection	8

Approach Ratings:	**Approaches**
Drainage	5
Embankment	5
Settlement	5
Erosion	4
Pavement	4
Guide Railing	5

Number of Flags Issued:

RED: 0 Yellow: 0 Safety: 0

Vulnerability Reviews Recommended: 1=Yes, 2=No, 3=NA, X=NotActive

Hydraulic: 3	Overload: X	Steel: 2
Collision: 2	Concrete: X	Seismic: X

Inspector's Signature: CheckValue: 1,792,346,961 Date: 5/4/2012

Bruce Opalka,PE () (Inspector ID:3000038)

Signed copy of this inspection report is available in the appropriate NYSDOT Regional Office

Reviewed By: Date: 5/31/2012

James R. Manning,PE () (QC ID:3000023)

Signed copy of this inspection report is available in the appropriate NYSDOT Regional Office

Inspection Date: 5/4/2012 RC: 33 BIN: 1072591

Span Ratings

Carried: 481I 481I33012128 Crossed: NORTHRN BLVD CR82 CheckValue: 1,792,346,961

Deck Element Ratings:	**001**
Wearing Surface	5
Curbs	4
Sidewalks, Fascias	5
Railings, Parapets	5
Scuppers	8
Gratings	8
Median	8
Mono Deck Surface	6

Superstructure Ratings:	**001**
Structural Deck	6
Primary Members	6
Secondary Members	6
Paint	4
Joints	8
Recommendation	6

Pier Ratings:	**001**
Bearings, Bolts, Pads	8
Pedestals	8
Top of Cap or Beam	8
Stem Solid Pier	8
Cap Beam	8
Pier Columns	8
Footings	8
Erosion or Scour	8
Piles	8
Recommendation	8

Utility Ratings:	**001**
Lighting	8
Sign Structure	8
Utilities and Support	8

Field Notes:

Field Date	Arrival	Departure	Temp (C)	Temp (F)	Weather Conditions
5/4/2012	9:00:00 AM	12:00:00 PM	16	60	overcast

Inspection Date: 5/4/2012 RC: 33 BIN: 1072591

Inspection Notes

Carried: 481I 481I33012128 Crossed: NORTHRN BLVD CR82 CheckValue: 1,792,346,961

Note ID: 321210725910000

Beg Abut -- Abutment: Joint with Deck -- Rated 4, Was 4
Referenced Photos: "5", "7"
2012 - Begin concrete header is spalling in a few areas along entire width. The begin left, begin side concrete header appears to have been saw-cut, and is spalled.

Note ID: 321210725910005

Beg Abut -- Abutment: Bearings, Bolts, Pads -- Rated 5, Was 5
Referenced Photos: "8", "9"
2012: Expansion bearing #1 is under extended +/-
3` while all others are over extended +/-3` on this 60-62` day. Overall rating will remain a '5'.

Note ID: 321210725910001

Approaches: Erosion -- Rated 4, Was 4
Referenced Photos: "4"
2012 - The end left quad, past the granite approach curb runout, the are 4 erosion gullies formed up to 1.5' wide by 2' deep.

Note ID: 321210725910002

Approaches: Pavement -- Rated 4, Was 4
Referenced Photos: "3"
2012 - The end concrete approach slab is spalling at the end and previous concrete patch is spalling around the edge. Potholing along edges of both approach slabs. Some random cracking.

Note ID: 321210725910006

Span 001 -- Deck Elements: Curbs -- Rated 4, Was 5
Referenced Photos: "6"
2012 Right granite curb line is out of alignment due to lost of mortar material.

Note ID: 321210725910003

Span 001 -- Superstructure: Paint -- Rated 4, Was 4
Referenced Photos: "2"
2012 - Right fascia web, particularly at end, has a very coarse texture, large rust flakes, and dark hue on the weathering steel for approx. full height by full length.

Note ID: 321210725910004

End Abut -- Abutment: Stem (Breastwall) -- Rated 5, Was 5
Referenced Photos: "1"
2012: Vertical cracking with punky concrete in far right corner of stem.

Inspection Date: 5/4/2012 RC: 33 BIN: 1072591

Inspection Notes

Carried: 481I 481I33012128 Crossed: NORTHRN BLVD CR82 CheckValue: 1,792,346,961

Note ID: 321210725910004 - continued

Inspection Date: 5/4/2012 RC: 33 BIN: 1072591

Inspection Photos in Photo Number Order

Carried: 481I 481I33012128 Crossed: NORTHRN BLVD CR82 CheckValue: 1,792,346,961

End abutment, right corner of stem.
Viewed from end right corner.



Photo Number: 1 Photo Filename: 100_5009 (Small).J

End right fascia, paint condition.
Viewed from end right corner.



Photo Number: 2 Photo Filename: 100_5010 (Small).J

Inspection Date: 5/4/2012 RC: 33 BIN: 1072591

Inspection Photos in Photo Number Order

Carried: 481I 481I33012128 Crossed: NORTHRN BLVD CR82 CheckValue: 1,792,346,961

End approach pavement.
Viewed from end right looking left.



Photo Number: 3 Photo Filename: 100_5011 (Small).J

End left approach erosion gully.
Viewed from end left corner.



Photo Number: 4 Photo Filename: 100_5012 (Small).J

Inspection Date: 5/4/2012 RC: 33 BIN: 1072591

Inspection Photos in Photo Number Order

Carried: 481I 481I33012128 Crossed: NORTHRN BLVD CR82 CheckValue: 1,792,346,961

Beginning bridge joint. Viewed from beginning right looking left.



Photo Number: 5 Photo Filename: 100_5017.(Small).J

Right side curb line. Viewed from beginning right looking towards end.



Photo Number: 6 Photo Filename: 100_5016.(Small).J

Inspection Date: 5/4/2012 RC: 33 BIN: 1072591

Inspection Photos in Photo Number Order

Carried: 481I 481I33012128 Crossed: NORTHRN BLVD CR82 CheckValue: 1,792,346,961

Beginning abutment backwall, shows leakage from joint above.
Viewed from beginning bay #2.



Photo Number: 7 Photo Filename: 100_5036 (Small).J

Beginning abutment bearing #3.
Viewed from beginning left at bay #2.



Photo Number: 8 Photo Filename: 100_5035 (Small).J

Inspection Date: 5/4/2012 RC: 33 BIN: 1072591

Inspection Photos in Photo Number Order

Carried: 481I 481I33012128 Crossed: NORTHRN BLVD CR82 CheckValue: 1,792,346,961

Beginning abutment bearing #1.
Viewed from beginning left corner.

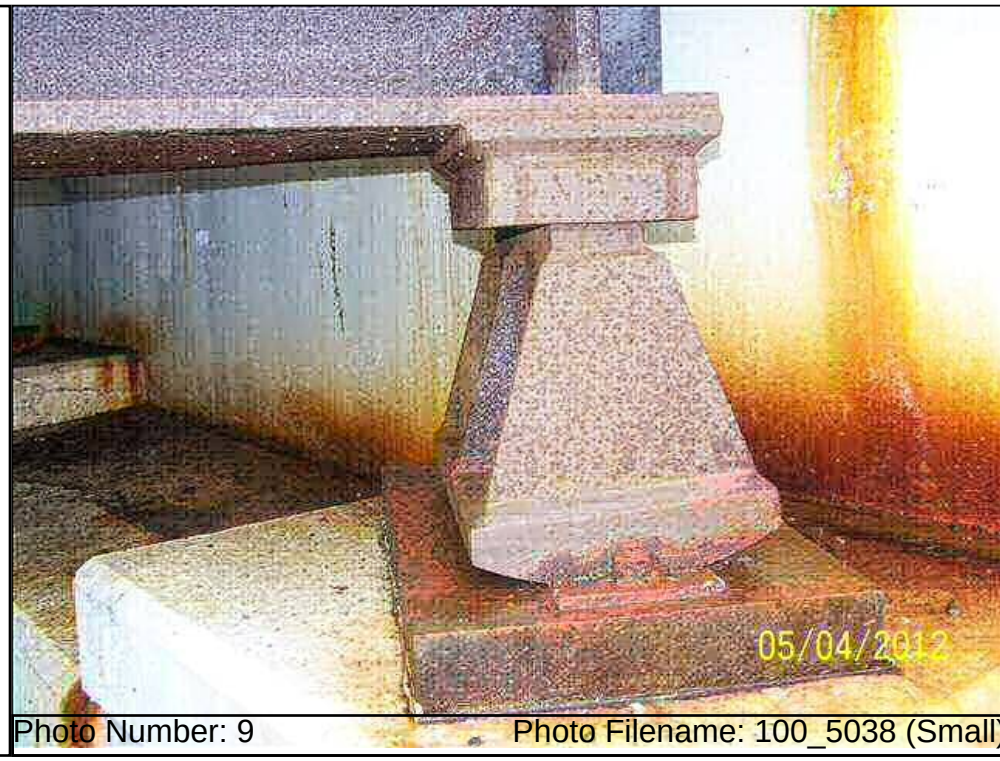

Photo Number: 9 Photo Filename: 100_5038 (Small).J

No Photo

Inspection Date: 5/4/2012 RC: 33 BIN: 1072591

Inspection Sketches in Sketch SysID Order

Carried: 481I 481I33012128 Crossed: NORTHRN BLVD CR82 CheckValue: 1,792,346,961

Sketch ID: 321210725910000 Sketch Filename: LdRatNC.12

General Sketch for Bridge
Referenced Photos:

Region 3 LoadRatingFieldCheckForm

NYSDOT BRIDGE INSPECTION REPORT			
SHEET	1	OF	1

LOAD RATING FIELD CHECK FORM

BIN:	1072591	Insp. Date:	05/04/2012

Dead Load - Note Changes since Last load Rating or state "NONE":

NONE

Section Loss -Note Changes since Last load Rating or state "NONE":

NONE

Additional Notes:

NONE

Attachments:

Team Leader: BRUCE OPALKA

Inspection Date: 5/4/2012 RC: 33 BIN: 1072591

Gen. Rec., Postings, Federal Ratings, etc.

Carried: 481I 481I33012128 Crossed: NORTHRN BLVD CR82 CheckValue: 1,792,346,961

Overall Condition:

GENERAL RECOMMENDATION: 6

Computed Condition Rating: 5.281

Problems Requiring Action:

NO Further Investigation Needed

NO Flags Issued

POSTINGS:

Inspector Confirmed existing Posting data as correct.
Posted Vertical Clearance ON the bridge is: No Posting
Posted Vertical Clearance UNDER the bridge is: No Posting
No Load Restriction is posted on this bridge

Overloads Observed:

NO Overload Vehicles were observed on this bridge

FEDERAL RATINGS:

NBI Deck Condition: 7
NBI Superstruct Condition: 7
NBI Substruct Condition: 7
NBI Channel Condition: N
NBI Culvert Condition: N

Diving Inspection Needs:

Diving Inspection Required? No Date of Last Diving Inspection: No Date

Inventory Problems:

Inventory Problems Exist? No

Miscellaneous:

Time Required to Inspect Bridge: 3 Hours

Lane Closure Needs: None Required

No Railroad Flagging Required

No Pedestrian Fence

There is a Snow Fence present

The BIN Plate is in OK condition

Inspection Date: 5/4/2012 RC: 33 BIN: 1072591

Gen. Rec., Postings, Federal Ratings, etc.

Carried: 481I 481I33012128 Crossed: NORTHRN BLVD CR82 CheckValue: 1,792,346,961

Special Emphasis Inspection Required:

Non-Redundant/Fracture Critical Members - No
Pin and Hangers - No
Fatigue-Prone Welds - No
Non-Categorized Fatigue-Prone Details - No
Other (Specified in Text) - No

Special Emphasis Details:

No Special Emphasis Inspection Required.

General Notes To the Next Inspector:

BIN plate located in top left corner of end backwall.

Improvements Observed:

2010 - All concrete stems and wingwalls have been epoxy coated since last inspection.
Inventory change has been made to maximum Verticle clearance, because it appears to have been repaved under both bridges. The Max VC is 15' - 9" and Min VC is still 15' - 1".

Inspection Date: 5/4/2012 RC: 33 BIN: 1072591

Review Progress and Personnel Present at Inspection

Carried: 481I 481I33012128 Crossed: NORTHRN BLVD CR82 CheckValue: 1,792,346,961

Inspection Submission Status:

Submitted to QC Engineer on: 5/10/2012
QC Submission Number: 253204

QC Review Completed: 5/31/2012
QC Engineer: James R. Manning

Submitted to Liaison Engineer on: 6/29/2012
Liaison Submission Number: 53209

Liaison Review Completed: 7/11/2012
Liaison Engineer: TODD M. HERMANN

Submitted for BIIS Processing on: 7/11/2012
BIIS Submission Number: .kp1

Current Status: Keypunched, Sent to BIIS
Check Value: 1,792,346,961

Personnel Present During Inspection:

Bruce Opalka - Team Leader
Keith Way - Assistant Team Leader

Inspection Date: 5/4/2012 RC: 33 BIN: 1072591

Inspection Access Requirements

Carried: 481I 481I33012128 Crossed: NORTHRN BLVD CR82 CheckValue: 1,792,346,961

Equipment Required for Inspection

No Access Requirement Changes Noted During This Inspection.
This Listing is from the Inventory Database.

ACCESS CATEGORIES FOR ENTIRE BRIDGE
Required: Walking, Step Ladder, Extension Ladder

ACCESS CATEGORIES FOR SPAN 1
Required: Walking, Step Ladder, Extension Ladder

Inspection Date: 5/4/2012 RC: 33 BIN: 1072591

Culvert Measurements

Carried: 481I 481I33012128 Crossed: NORTHRN BLVD CR82 CheckValue: 1,792,346,961

Culvert Measurements

NO CULVERT DATA FOR BIN 1072591

Standard Photos **RC: 33 BIN: 1072591**

Carried: 481I 481I33012128 **Crossed: NORTHRN BLVD CR82**

Feature Crossed Left .12.JPG



Standard Photos **RC: 33 BIN: 1072591**

Carried: 481I 481I33012128 Crossed: NORTHRN BLVD CR82

1072591_LOCATION_MAP.JPG

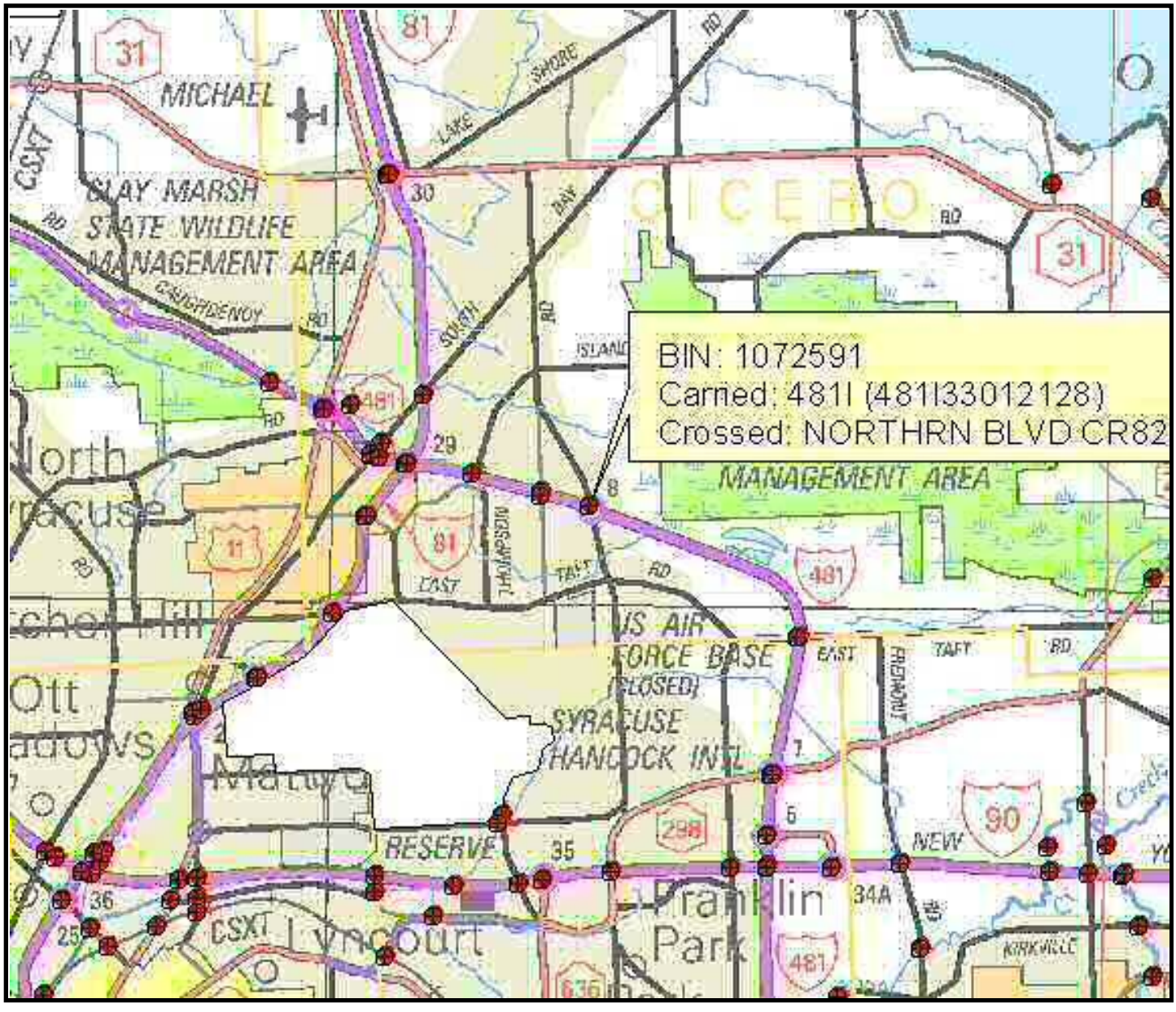
BIN: 1072591
Carried: 481I (481I33012128)
Crossed: NORTHRN BLVD CR82
MICHAEL
SHORE
LAKE
CICERO
SUNSET
SUNSET
SUNSET

Standard Photos **RC: 33 BIN: 1072591**

Carried: 481I 481I33012128 Crossed: NORTHRN BLVD CR82

1072591_QUAD_MAP.JPG

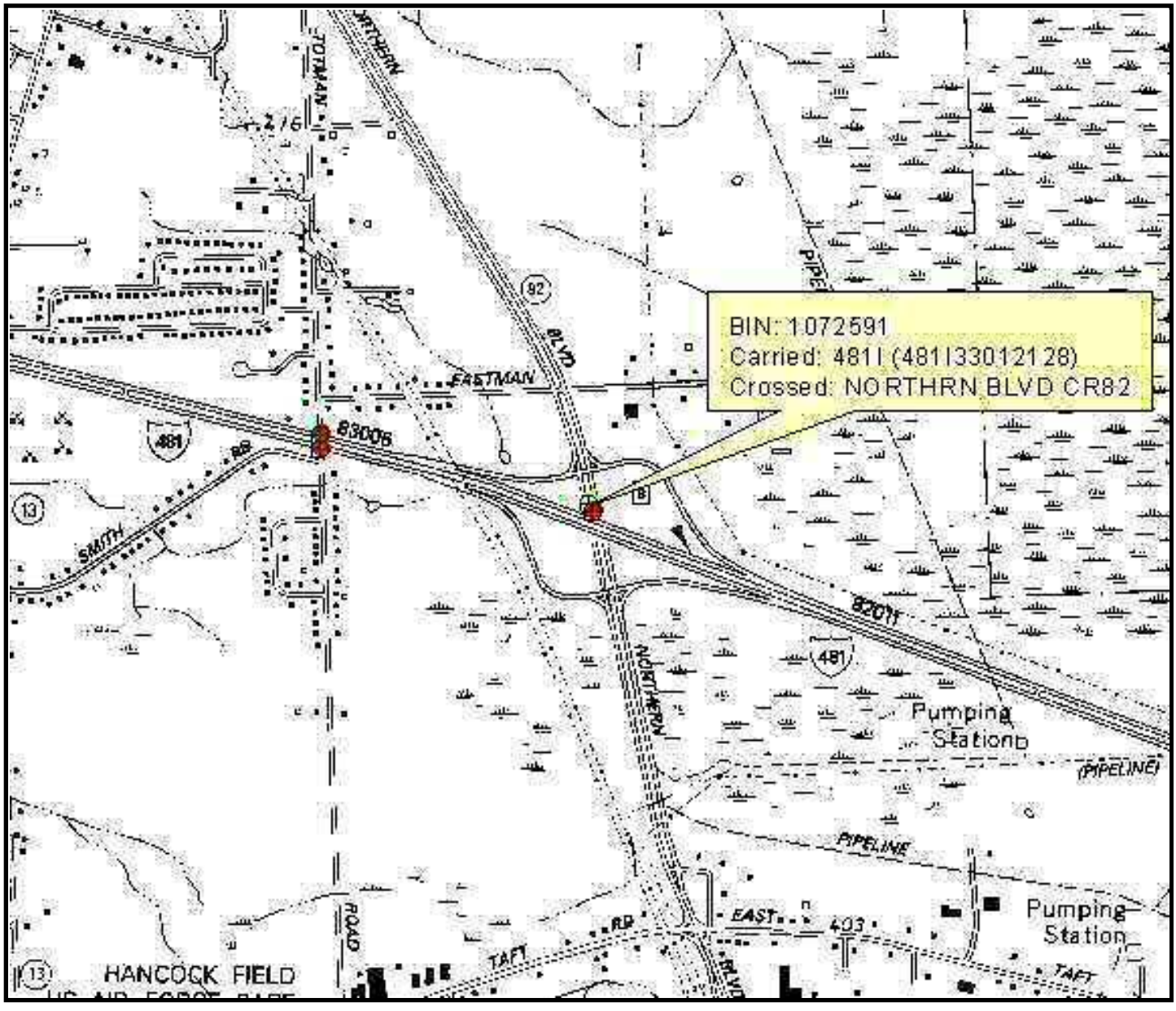

Standard Photos **RC: 33 BIN: 1072591**

Carried: 481I 481I33012128 Crossed: NORTHRN BLVD CR82

Abutment Begin.12.JPG



Standard Photos **RC: 33 BIN: 1072591**

Carried: 481I 481I33012128 Crossed: NORTHRN BLVD CR82

Abutment End.12.JPG



Standard Photos **RC: 33 BIN: 1072591**

Carried: 481I 481I33012128 Crossed: NORTHRN BLVD CR82

Approach Begin.12.JPG



Standard Photos **RC: 33 BIN: 1072591**

Carried: 481I 481I33012128 Crossed: NORTHRN BLVD CR82

Approach End.12.JPG



Standard Photos **RC: 33 BIN: 1072591**

Carried: 481I 481I33012128 Crossed: NORTHRN BLVD CR82

BegAbutWing.02.JPG

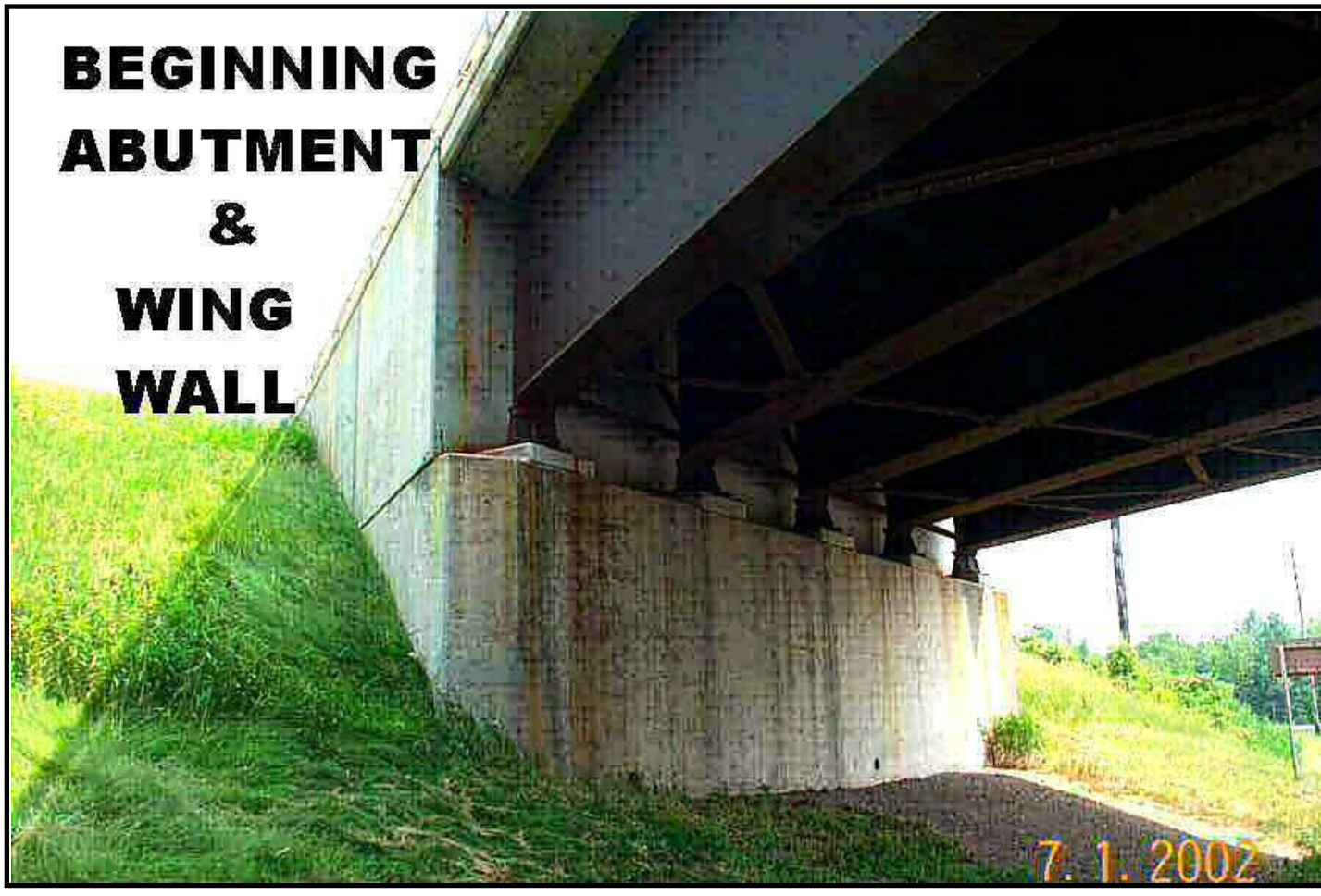

Standard Photos **RC: 33 BIN: 1072591**

Carried: 481I 481I33012128 Crossed: NORTHRN BLVD CR82

BeginningApproach.02.JPG



Standard Photos **RC: 33 BIN: 1072591**

Carried: 481I 481I33012128 Crossed: NORTHRN BLVD CR82

CrossedLeft.02.JPG



Standard Photos **RC: 33 BIN: 1072591**

Carried: 481I 481I33012128 **Crossed: NORTHRN BLVD CR82**

CrossedRight.02.JPG



Standard Photos **RC: 33 BIN: 1072591**

Carried: 481I 481I33012128 Crossed: NORTHRN BLVD CR82

Elevation Left.12.JPG



Standard Photos **RC: 33 BIN: 1072591**

Carried: 481I 481I33012128 Crossed: NORTHRN BLVD CR82

EndApproach.02.JPG



Standard Photos **RC: 33 BIN: 1072591**

Carried: 481I 481I33012128 Crossed: NORTHRN BLVD CR82

Feature Crossed Right.12.JPG



Standard Photos **RC: 33 BIN: 1072591**

Carried: 481I 481I33012128 Crossed: NORTHRN BLVD CR82

FrameUnderneath.02.JPG



Standard Photos **RC: 33 BIN: 1072591**

Carried: 481I 481I33012128 Crossed: NORTHRN BLVD CR82

Framing View.12.JPG

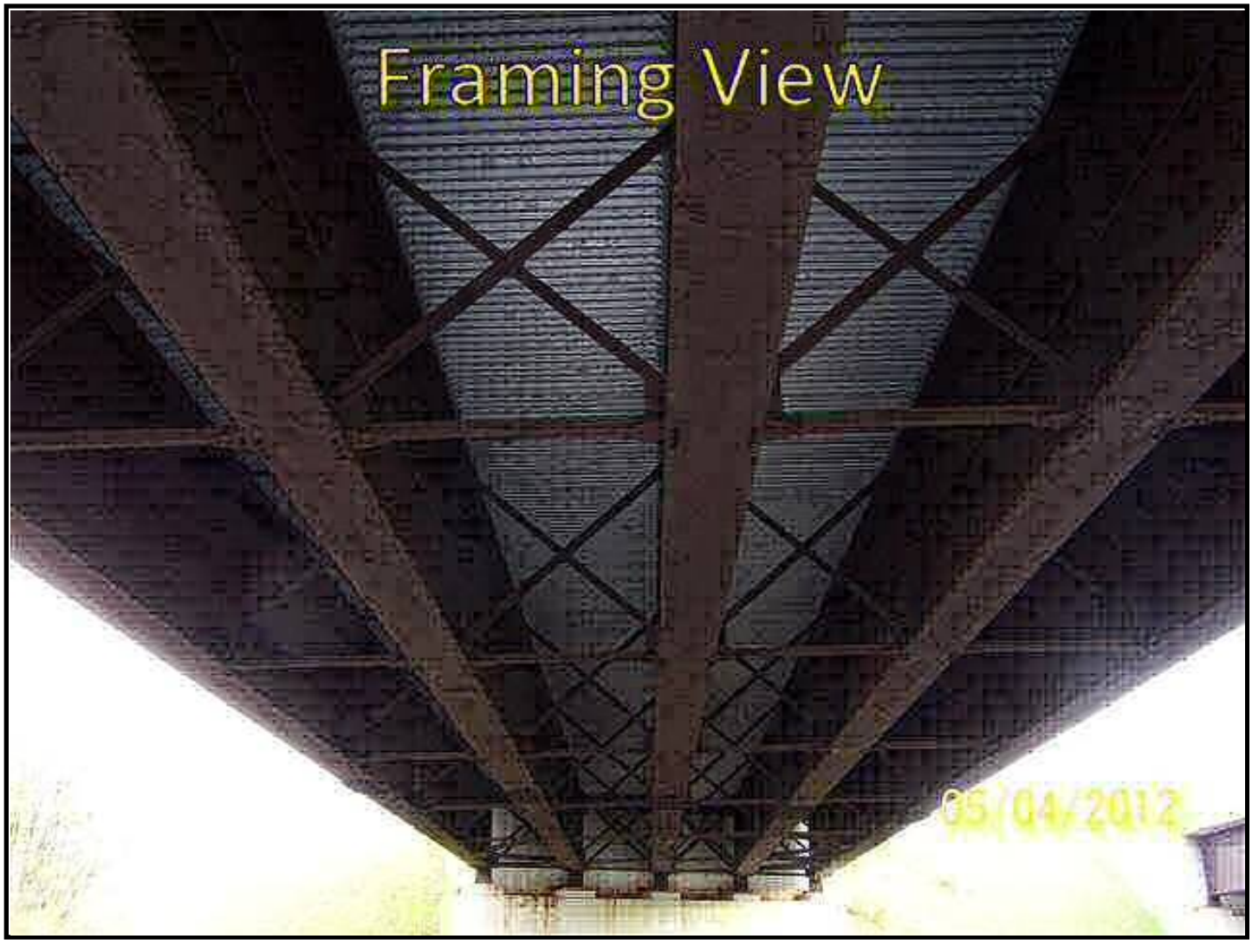

Standard Photos **RC: 33 BIN: 1072591**

Carried: 481I 481I33012128 Crossed: NORTHRN BLVD CR82

LeftElevation.02.JPG



LEVEL 1 LOAD RATING SUMMARY SHEET

Region/County Region 3/Onondaga BIN 1072591
Feature(s) Carried and Crossed I-481 Southbound/Northern Blvd.
Date of field inspection upon which Level 1 rating is based 1/7/2014

OVERALL BRIDGE RATINGS (BASED ON LOWEST RATED ELEMENTS):

Total number of rating units 1

	H inventory	H operating	HS inventory	HS operating
Rating	H 34.10 (tons)	H 56.95 (tons)	HS 61.38 (tons)	HS 102.50 (tons)
Lowest rated element	Interior Girder G4	Interior Girder G4	Interior Girder G4	Interior Girder G4

Analysis method LFR Comments

Individual Rating Unit Level 1 values:

Rating unit span(s) 1

Main member ratings

	H inventory	H operating	HS inventory	HS operating
Rating	H (tons)	H (tons)	HS (tons)	HS (tons)
Lowest rated element				

Analysis method Comments

Floorbeam ratings

	H inventory	H operating	HS inventory	HS operating
Rating	H (tons)	H (tons)	HS (tons)	HS (tons)
Lowest rated element				

Analysis method Comments

Stringer ratings

	H inventory	H operating	HS inventory	HS operating
Rating	H 34.10 (tons)	H 56.95 (tons)	HS 61.38 (tons)	HS 102.50 (tons)
Lowest rated element	Interior Girder G4	Interior Girder G4	Interior Girder G4	Interior Girder G4

Analysis method LFR Comments

Certified by Date

Quality Control Engineer Signature Date
Agency or Company represented by certifier

Note:
-If connection ratings govern, record them under stringer ratings for stringer – floorbeam connection, floorbeam ratings for floorbeam-main member connections, etc.
-When Level 1 results indicated the need for load posting or other corrective action, the NYSDOT Regional Structures Engineer shall be notified immediately.
-Load ratings should be filed in the regional office within 60 days of completion of calculations.
-Bridges shall be flagged based on Level I results in accordance with the current NYSDOT flagging procedure.
-Bridge load posting, closure, etc. determinations shall be made as results are being produced.

PARSONS

100 Broadway
New York, NY 10005
Phone: 212-266-8300
Fax: 212-571-6825
www.parsons.com

TECHNICAL MEMORANDUM

FROM: Kian Siang Chau, P.E
NYSPE 082744

DATE: MARCH 19, 2014

RE: SEISMIC SCREENING SUMMARY
NEW YORK STATE DEPARTMENT OF TRANSPORTATION
D031085; PIN 3501.60; I-81

BIN: 1072591 (I-481 SB/Northern Blvd)

This memorandum summarizes the seismic screening conducted for BIN 1072591 as part of the Interstate 81 Project in Syracuse, NY. The purpose of the screening is to determine if seismic retrofits are warranted at the superstructure to substructure connection, and if further seismic evaluation of the structure is required. This memorandum will give the screening results, retrofits required and recommendations for further seismic evaluation of the structure.

SCREENING PROCEDURE

The seismic screening was performed in accordance with the FHWA Seismic Retrofitting Manual for Highway Structures: Part 1 - Bridges, January 2006. As per the referenced manual, seismic screenings were performed for both lower level and upper level earthquake ground motion. The lower level earthquake ground motion has a reasonable likelihood of occurrence within the life of the bridge (50% probability of exceedance within a 75 year bridge life). The upper level earthquake ground motion has a finite likelihood of occurrence within the life of the bridge (7% probability of exceedance within a 75 year bridge life).

Values for the spectral acceleration for the Syracuse area used in the screening are as follows:

- Lower Level Earthquake Ground Motion for a Short Period (0.2 seconds): $S_S = 0.0251$
- Lower Level Earthquake Ground Motion for a Long Period (1.0 seconds): $S_1 = 0.0076$
- Upper Level Earthquake Ground Motion for a Short Period (0.2 seconds): $S_S = 0.139$
- Upper Level Earthquake Ground Motion for a Long Period (1.0 seconds): $S_1 = 0.047$

These values are considered constant and are the same for all seismic screenings of bridges in the Syracuse area.

The Site Class is based on the soil conditions at the bridge location. It was determined that this parameter has little effect on the results of the seismic screening because the spectral acceleration values for the Syracuse area are small. Based on this, a site class of D was used for all seismic screenings of bridges in the Syracuse area.

Bridge parameters used in the seismic screening were retrieved from the record drawings and WinBolts data.

The seismic screening takes into account the anticipated service life, importance, and the seismic exposure of the bridge to determine a seismic retrofit category (SRC). The SRC is then used to determine seismic evaluation methods and retrofit measures. There are four SRCs, A through D. Seismic retrofit category A is the lowest category; bridges in this category do not require retrofits or further seismic evaluation. Seismic retrofit category D is the highest category; bridges in this category requiring the most rigorous seismic evaluations and retrofits.

SCREENING RESULTS

The SRC for the bridge is "**C**" for lower level earthquake ground motion and "**B**" for upper level earthquake ground motion.

RETROFITS REQUIRED

No seismic retrofits are required for the bridge superstructure to substructure connection.

RECOMMENDATIONS FOR FURTHER SEISMIC EVALUATION

No further seismic evaluation is required for lower level earthquake ground motion. For the upper level earthquake ground motion, it is recommended that the capacities of the bearings are checked as per Section 5.2 of the referenced manual.

Retrofit cost estimates will be provided after any further required seismic evaluations are completed.

BRIDGE DECK EVALUATION REPORT

RECOMMENDATIONS

The bridge deck inspection findings and evaluation are used as a tool for developing the scope of work and cost estimates for the development and comparison of alternatives for the overall project.

The total damaged area of the deck is 0.5% of the total deck surface area. The cores indicate the reinforcement steel is 2.25 inches to 3.0 inches below the surface of the deck. The lab test indicates that chloride ion concentrations at all the sample locations are significantly higher than the corrosion threshold for steel.

Due to the age, condition and high chloride ion content of the bridge deck concrete, the bridge deck should be rehabilitated or replaced to meet the current standards and to mitigate excessive future maintenance costs.

ALTERNATIVES

- Rehabilitation Alternative - 3 inches Bonded Concrete Overlay
  - Scope

    The scope of this alternative will include the complete removal of the bridge railings, curb and safety walks, and fascias to the level of the original top of the deck. The joint will be removed. The top 2 inches of the entire deck will be removed and areas of deteriorated concrete must be removed to at least 1 inch below the level of the reinforcement steel and to the horizontal and vertical limit of any detectable hollow areas. Additionally, any further areas of deteriorated concrete detected will require full depth removal. Any corrosion of the reinforcement steel will be removed by sandblasting or hydro-blasting. The proposed deck overlay will be a 3 inches thick bonded concrete overlay yielding a nominal 9.5 inches standard thickness deck. A new single-sloped concrete barrier and a new armorless joint will be installed. The Level 1 Load Rating for the final condition was found to be acceptable.

- Useful Life Expectancy

  The removal of the top 2 inches of the existing deck will remove a portion of the deck with high chloride ion concentrations. It can be anticipated that chloride ions will continue to migrate into the remaining deck to the reinforcing steel resulting in further corrosion-related deterioration of the deck surface. Concrete admixtures will be included in the bonded concrete overlay to impede the continued penetration of chloride into the deck from the surface. This alternative will result in an extended useful life expectancy estimated at 20 years.

The design life of the project is 30 years (ETC + 30). This alternative does not meet the project objectives of obtaining 30 years of service life and is not evaluated further.

- Rehabilitation Alternative – 100% Deep Removal and Partial Deck Reconstruction
  - Scope

    The scope of this alternative will include the complete removal of the bridge railings, curb and safety walks, and fascias to the level of the original top of the deck. The joint will be removed. The scope of this alternative will include partial depth reconstruction with removal of the concrete to at least 1 inch below the top mat of the reinforcement steel. Additionally, any further areas of deteriorated concrete detected will require full depth removal. Any corrosion of the reinforcement steel will be removed by sandblasting or hydro-blasting. Due to the condition of the deck, full depth removal is not likely and not included in the cost estimate. The proposed deck partial reconstruction will be a nominal 5.75 inches thick concrete deck yielding a 9.5 inches standard thickness deck. A new single-sloped concrete barrier and a new armorless joint will be installed. The Level 1 Load Rating for the final condition was found to be acceptable.
  - Useful Life Expectancy

    This alternative will provide a useful life expectancy is estimated at 35 years.
  - Cost Estimate

    The estimated cost for this alternative is $613,000. The Engineer's Opinion of Probable Construction Cost worksheet is at the end of this section.

- Replacement Alternative – Cast-In-Place Concrete
  - Scope

    This scope of this alternative will include the complete demolition of the existing bridge deck, bridge railings, curb and safety walks, fascias and bridge joint. The bridge deck will be replaced with a new 9.5 inches standard thickness concrete deck. A new single-sloped concrete barrier and a new armorless joint will be installed. The Level 1 Load Rating for the final condition was found to be acceptable.
  - Useful Life Expectancy

    This alternative will provide a useful life expectancy is estimated at 40+ years.
  - Cost Estimate

    The estimated cost for this alternative is $855,000. The Engineer's Opinion of Probable Construction Cost worksheet is at the end of this section.

- Replacement Alternative – Pre-cast Concrete Deck Panels
  - Scope

    The scope of this alternative is similar to the Cast-In-Place Concrete Deck Replacement Alternative except the deck structure will be precast panels. This alternative offers reduced construction time over conventional construction.
  - Useful Life Expectancy

    This alternative will provide a useful life expectancy is estimated at 40+ years.
  - Cost Estimate

    The comparison of accelerated construction to conventional construction is beyond the current scope of this evaluation.

IN-DEPTH INSPECTION REPORT

D031085 P.I.N. 3501.60

ELEMENT SPECIFIC BRIDGE WORK

B.I.N. 1072592

TEAM LEADER Andrew P. Thompson 84914
NYSPE LICENSE #

ASSISTANT TEAM LEADER Mike Savino

FEATURE CARRIED I-481 Northbound

FEATURE CROSSED Northern Blvd.

DATE FIELD WORK BEGAN 12/9/13

DATE FIELD WORK COMPLETED 1/14/14

TABLE OF CONTENTS

- STRUCTURE IDENTIFICATION
- INTRODUCTION
- PROJECT LOCATION MAP
- IN DEPTH CONDITION DOCUMENTATION
- PLANS & SKETCHES
- IN-DEPTH PHOTO DOCUMENTATION
- ASBESTOS SAMPLING SURVEY
- LATEST BIENNIAL INSPECTION REPORT

STRUCTURE IDENTIFICATION

a. Bridge Identification Number (BIN): 1072592
b. Reference Marker: 481I 3301 2128
c. Region: NYSDOT Region 3
d. County: Onondaga
e. Town: Cicero
f. Feature Carried: I-481 Northbound
g. Feature Crossed: Northern Blvd. CR82

INTRODUCTION

a. Bridge History
   i. Year Built: 1986
   ii. Bridge Type: Single Span Steel, Multi-girder
   iii. Span Length: 191 feet
   iv. Out-to-Out Width: 42 feet
   v. Structural Ratings and Rankings
      1. Federal Sufficiency: 87.2 (May 2012)
      2. Condition Rating: 5.234 (May 2012)
      3. General Recommendation: 6
   vi. Live Load Posting (HS25): No
   vii. National Highway System (NHS): Yes
   viii. Previous work Done: Waterproof bridge deck (1999). Repair abutments & wingwalls (2007). Maintain & repair structural bridge deck (2008).
   ix. Planned Future Work: N/A
b. Highway Classification
   i. Functional Classification: Urban Principle Arterial - Interstate
   ii. Traffic Volumes

YEAR	AADT Projected
2014	36037
2034	53549
2054	79572

   iii. Plan for Maintenance and Protection of Traffic:
   Maintenance and Protection of traffic will be achieved by staged construction.

PROJECT LOCATION MAP

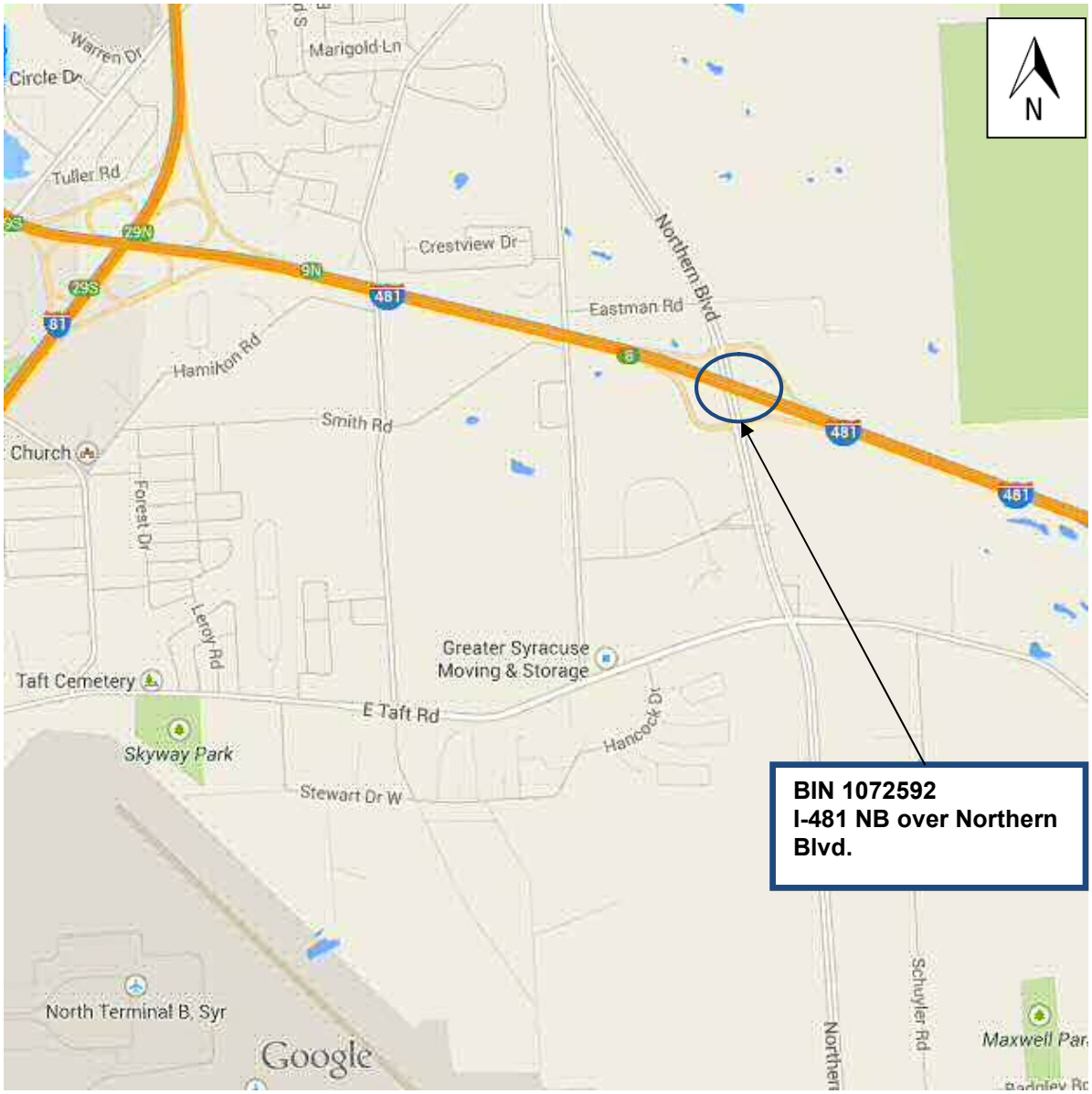

IN-DEPTH CONDITION DOCUMENTATION

NYS DEPT. OF TRANSPORTATION BRIDGE

BIN 1072592

SHEET: 1 OF 4

DATE: 1/14/2014

FEATURE CARRIED: I-481 NB
FEATURE CROSSED: NORTHERN BLVD.

TEAM LEADER: A.THOMPSON

A. TEAM LEADER: M. SAVINO

ITEM	REMARKS	PHOTO N0.
TP 349-22	Begin Abutment - Joint with Deck: The compression seal is in good condition (Photo 1). The left end of the begin header is spalled 1.5" deep x 5' long triangular up to full width at the left (Photo 2). The right end of the begin header is similarly spalled for a 16" length and filled with debris (Photo 3). Underneath, the steel rod shaped armor material to the end of the compression seal is detached (Photo 4). Rust staining and other signs of recent leakage were noted mostly at the ends (Photo 5).	1-5
TP 349-23	End Abutment - Joint with Deck: The compression seal is in good condition. The end header is spalled +/-1" along its interface with the approach slab for +/- half of its length (Photo 6). Underneath, rust staining and other signs of recent leakage were noted (Photo 7).	6,7
TP 349-24	Begin Abutment - Bearings: The bearings are high rocker type expansion bearings. The 2012 Biennial Inspection Report rated the bearings 4 due to 5 degree max leaning in the over extended position at 60 degrees F. During this inspection the Bearing 5 rocker was the most severe and leaned 5 degrees at 30 degrees F. No rockers bear on their outer quarter. No documentation needed. (Photo 26). Otherwise, bearings are in good condition.	26
TP 349-26	Begin Abutment – Seats and Pedestals: The seat at the left is map cracked and has a full length x 1.5” deep x 3” wide spall (Photo 8). The remainder of the seats and pedestals are in good condition.	8
TP 349-27	End Abutment – Seats and Pedestals: The back 1’ of all the pedestals is hollow and rust stained due to leakage from the joint (Photo 7). The seats at the left and right ends have map cracking (Photo 9). The remainder of the seats and pedestals are in good condition.	7,9
TP 349-28	Begin Abutment – Backwall: The backwall at the top right has a 2’ wide x 6” high x 3” deep spall with no exposed rebar (Photo 10). The backwall at the left and top right has map cracking (Photo 5 and 10). Rust staining was noted throughout with more severe conditions at both ends.	5,10
TP 349-29	End Abutment – Backwall: The backwall at the left has a 4’ high x 1.5’ wide x 1” deep spall with exposed rebar (Photo 11). There is also a 1’ x 4” x 2” deep spall at the top located 2’ from the left (Photo 12). The remainder of the backwall has map cracking and hairline vertical cracking throughout (Photo 13). Rust staining was noted throughout with more severe conditions at both ends.	11-13

ITEM	REMARKS	PHOTO N0.
TP 349-30	Begin Abutment – Stem The begin stem has several hollow areas throughout (Photo 14). The sum of the hollow areas is 77.9 sf or 14.1% of the stem face. These conditions are detailed on the Abutment Deterioration Sketch.	14
TP 349-31	End Abutment – Stem There is a 25 sf hollow area under Pedestal 1 with a 0.5 sf x 1” deep spall inside of it (Photo 15). The remainder of the stem face has only isolated hairline cracking.	15
TP 350-20	Deck Elements - Curb: The left granite curb is missing for the last 4' (Photo 16). The remainder of the curbs are in good condition with some missing grout.	16
TP 350-21	Deck Elements – Sidewalks/Fascias: Sidewalks The left safety walk has light map cracking for the first 25' (Photo 17). Remainder is in good condition. The right safety walk is similarly map cracked for its entire length and has a diagonal crack at the end with (2) 3" dia. x 1/2" deep spalls along the crack (Photo 18). Fascias Both fascias have map cracking throughout (Photo 19).	17,18 19
TP 350-22	Deck Elements – Railings/Parapets: The bridge railing and posts are in good condition. Snow fencing is present over the travel lanes on both sides of the bridge. The snow fence consists of 14 steel pipe posts on the left (13 on the right) located at rail posts, steel pipe rails, and chain link fencing. On the left the bottom pipe rails at Posts 3, 4, 6 - 9, and 11 are rusted through and detached on one or both sides (Photo 20 typ.). The bottom rails at Posts 2, 5, 10, 12, and 13 are rusted but intact. On the right the bottom pipe rails at Posts 3, 4, 6 - 8, and 10 - 12 are rusted through and detached on one or both sides. The bottom rails at Posts 2, 5, and 9 are rusted but intact. The remainder of the snow fencing is in good condition.	20
TP 350-27	Superstructure - Structural Deck: The structural deck is an 8.5" thick concrete mono deck with SIP forms. The left lane is in good condition except for a 10' x 10' area at the begin left with light scaling. The right lane has areas of hairline cracking with hollowness (Photo 21) as detailed in the Deck Deterioration Plan. Overall, 0.6% of the deck is hollow. The underside has SIP forms and is exposed only at the overhangs (Photo 22). The SIP forms are in good condition. Both overhangs have map cracking and transverse hairline cracking throughout (Photo 23). The cracking is more concentrated at the ends (Photo 10).	10 21-23

ITEM	REMARKS	PHOTO N0.
TP 350-30	Superstructure – Paint The girders are made of weathering steel and form a protective coating. Fascia girder G1 is losing its coating in the form of small flakes on the underside of its bottom flange (Photo 24). Fascia girder G5 on the underside of its bottom flange is similar but more severe with medium sized flakes (Photo 25). The remainder of the steel surfaces has only minor peppering with minor flaking at the girder ends (Photo 22).	22,24 25

NYS DEPT. OF
TRANSPORTATION BRIDGE

BIN 1072592

SHEET: 4 OF 4
DATE: 1/14/2014

FEATURE CARRIED: I-481 NB
FEATURE CROSSED: NORTHERN BLVD.

TEAM LEADER: A.THOMPSON
A. TEAM LEADER: M. SAVINO

ITEM	REMARKS	PHOTO N0.
	Special Emphasis Inspection Required Non-Redundant/Fracture Critical Members - No Pin and Hangers - No Fatigue-Prone Welds - No Non-Categorized Fatigue-Prone Details - No Other - No	

PLANS & SKETCHES

D250416

CONCRETE TABLE		
POUR	ITEM 5555.04	ITEM 555.01
SLAB	6156 S.F.	—
NORTH CURB OVERLAY	—	3.67 C.Y.
SOUTH CURB OVERLAY	—	3.67 C.Y.

FED. ROAD REG. NO.	STATE	FEDERAL AID PROJECT NO.	SHEET NO.	TOTAL SHEETS
	NEW YORK	IR-81-2(154)	228	380

INTERSTATE RTE. 570 EXTENSION (I-481)
NORTHERN BLVD. TO BEAR ROAD INTERCHANGE
ONONDAGA COUNTY

CAPITAL PROJECT IDENTIFICATION NO. 3107.00(01)

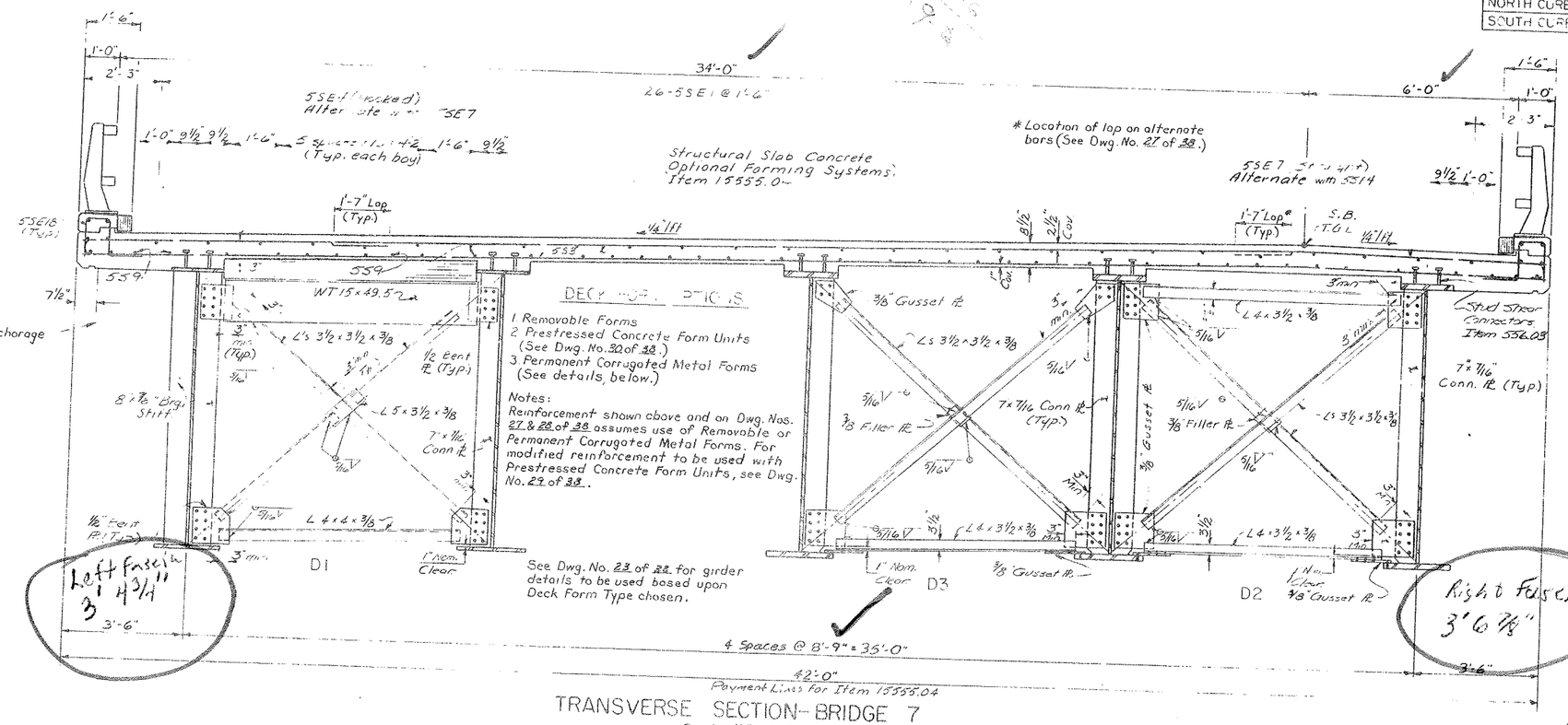

TRANSVERSE SECTION - BRIDGE 7
Scale: ½" = 1'-0"

FASCIA'S AVERAGE OUT 3'-6"

DECK FORM OPTIONS

1. Removable Forms
2. Prestressed Concrete Form Units (See Dwg. No. 30 of 38.)
3. Permanent Corrugated Metal Forms (See details, below.)

Notes:
Reinforcement shown above and on Dwg. Nos. 27 & 28 of 38 assumes use of Removable or Permanent Corrugated Metal Forms. For modified reinforcement to be used with Prestressed Concrete Form Units, see Dwg. No. 29 of 38.

DIAPHRAGM NOTES

Where holes are indicated, connections shall be made with 7/8" diameter high-strength bolts.

Cross frames may be fabricated to fit the girders in their erected position and cambered shape, but deflected vertically due to steel dead load only.

The contractor may place diaphragms on either side of the bearing stiffeners or stiffener connection plates as necessary to correct alignment provided there will be no inteference with other structural details

Tapered or flat shim plates may be used in the connection between skewed diaphragms and the bearing stiffeners or stiffener connection plates. Variable thicknesses of shim plates may be used. The minimum thickness of shim plate shall be 1/8" with a maximum number of three shim plates permitted at any connection. The total thickness of all shim plates used at any connection shall not exceed 1". Shim plates shall have the dimensions of the faying surface. The shim material shall conform to ASTM Designation A36, except that on unpainted structures, the shim material shall conform to ASTM Designation A588. No additional payment will be made for furnishing and placing the shim plates.

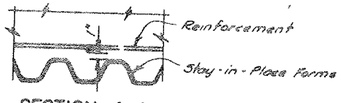

SECTION A-A
Not to Scale

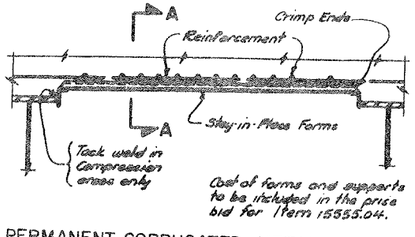

PERMANENT CORRUGATED METAL FORMS
(SEE "DECK FORM OPTIONS" NOTE, ABOVE)
Not to Scale

Note: Haunch Table is based upon use of the girder which would be used with Deck Form Type 2. (See Girder Table; Dwg. No. 23 of 38.)

HAUNCH TABLE

BRIDGE 7		℄ Brg.	0.1L	0.2L	0.3L	0.4L	0.5L	0.6L	0.7L	0.8L	0.9L	℄ Brg.
Girder 1	(A) Reqd. bottom of slab elevation	426.11	426.09	426.05	426.00	425.95	425.88	425.79	425.70	425.59	425.48	425.35
	(B) Top of steel El. (Field meas.)											
	(C) = (A) - (B)											
	(D) Concrete + S.D.L. Deflection	0	0.17	0.31	0.43	0.50	0.52	0.50	0.43	0.31	0.17	0
	(E) Depth of haunch reqd. = (C) + (D) Ft.											
Girder 2	(A) Reqd. bottom of slab elevation	426.29	426.26	426.22	426.17	426.11	426.03	425.95	425.85	425.74	425.62	425.49
	(B) Top of steel El. (Field meas.)											
	(C) = (A) - (B)											
	(D) Concrete + S.D.L. Deflection	0	0.17	0.31	0.43	0.50	0.52	0.50	0.43	0.31	0.17	0
	(E) Depth of haunch reqd. = (C) + (D) Ft.											
Girder 3	(A) Reqd. bottom of slab elevation	426.46	426.43	426.39	426.34	426.27	426.19	426.10	426.00	425.89	425.77	425.63
	(B) Top of steel El. (Field meas.)											
	(C) = (A) - (B)											
	(D) Concrete + S.D.L. Deflection	0	0.17	0.31	0.43	0.50	0.52	0.50	0.43	0.31	0.17	0
	(E) Depth of haunch reqd. = (C) + (D) Ft.											
Girder 4	(A) Reqd. bottom of slab elevation	426.64	426.60	426.56	426.50	426.43	426.35	426.26	426.15	426.04	425.91	425.77
	(B) Top of steel El. (Field meas.)											
	(C) = (A) - (B)											
	(D) Concrete + S.D.L. Deflection	0	0.17	0.31	0.43	0.50	0.52	0.50	0.43	0.31	0.17	0
	(E) Depth of haunch reqd. = (C) + (D) Ft.											
Girder 5	(A) Reqd. bottom of slab elevation	426.67	426.63	426.58	426.52	426.45	426.36	426.27	426.16	426.04	425.91	425.76
	(B) Top of steel El. (Field meas.)											
	(C) = (A) - (B)											
	(D) Concrete + S.D.L. Deflection	0	0.17	0.31	0.43	0.50	0.52	0.50	0.43	0.31	0.17	0
	(E) Depth of haunch reqd. = (C) + (D) Ft.											

NOTE: Computations in the Haunch Table shall be algebraic.
Haunch Table is based upon use of the girder which would be used with Deck Form Type 2 (See Girder Table; Dwg. No. 23 of 38.

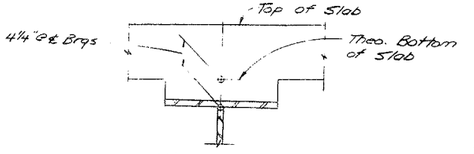

HAUNCH DETAIL
Scale: 1" = 1'-0"

All structural steel shall be ASTM A588, unpainted

See enlarged Fascia Detail on Dwg. No. 26 of 38.

For details of Stone Curb, see Common Details; Dwg. No. 6 of 16.

For details of Steel Bridge Railing (Two Rail), see Common Details; Dwg. No. 7 of 16.

For details of Stud Shear Connectors, see Common Details; Dwg. No. 5 of 16.

For additional reinforcement details, see Dwg. Nos. 24 & 28 of 38.

STATE OF NEW YORK
DEPARTMENT OF TRANSPORTATION
DIVISION OF DESIGN AND CONSTRUCTION

Bridge 7 over Northern Blvd.

TRANSVERSE SECTION & HAUNCH TABLE, BRIDGE 7

PROJ. ENG. E. L. Garth — DATE MADE
DESIGN A. A. Fabi — DRAWING NO. 25 of 38

DOT 1793 (7/80)

D250416

FED. RD. REG. NO.	STATE	FEDERAL AID PROJECT NO.	SHEET NO.	TOTAL SHEETS
	NEW YORK	I-481-2(154)	227	380

INTERSTATE RTE. 570 EXTENSION (I-481)
NORTHERN BLVD. TO BEAR ROAD INTERCHANGE
ONONDAGA COUNTY

CAPITAL PROJECT IDENTIFICATION NO. 3107.00(01)

All structural steel shall be ASTM A588, unpainted.

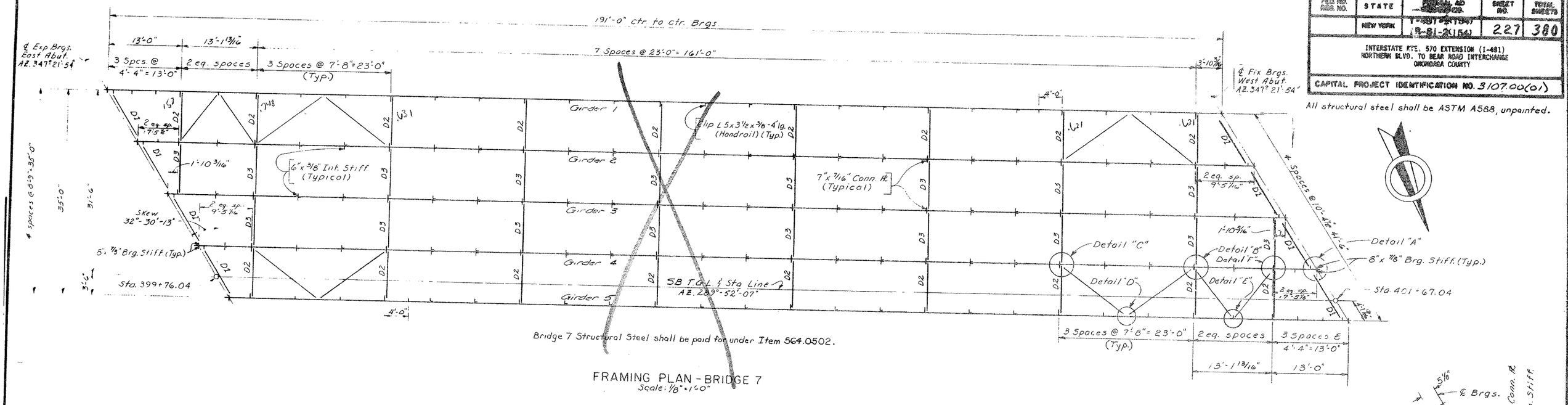

Bridge 7 Structural Steel shall be paid for under Item 564.0502.

FRAMING PLAN - BRIDGE 7
Scale: 1/8" = 1'-0"

For placement of Intermediate Stiffeners and Clip Ls (Bridge 6), see Bridge 7 Framing Plan.

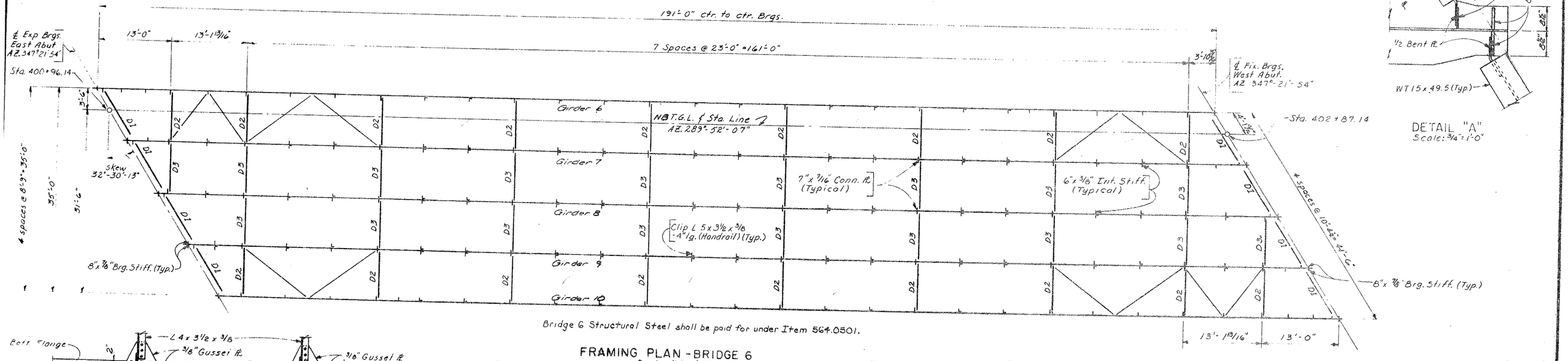

Bridge 6 Structural Steel shall be paid for under Item 564.0501.

FRAMING PLAN - BRIDGE 6
Scale: 1/8" = 1'-0"

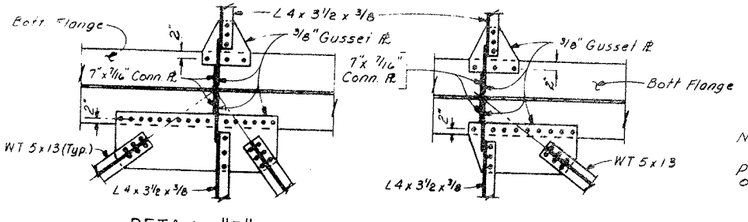

Note:
All bolt heads shall be placed on the underside of bottom flange.

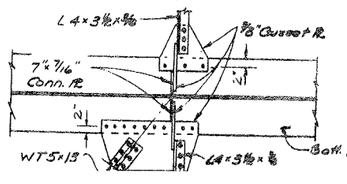

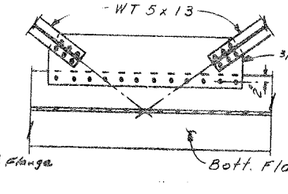

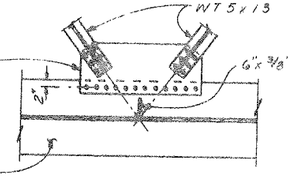

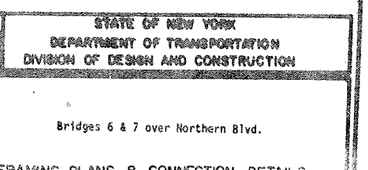

DETAIL "A"
Scale: 3/4" = 1'-0"

STATE OF NEW YORK
DEPARTMENT OF TRANSPORTATION
DIVISION OF DESIGN AND CONSTRUCTION

Bridges 6 & 7 over Northern Blvd.

FRAMING PLANS & CONNECTION DETAILS

FED. RD. REG. NO.	STATE	FEDERAL AID PROJECT NO.	SHEET NO.
	NEW YORK	I-481-2(154) IB-81-2(154)	224

INTERSTATE RTE. 570 EXTENSION (I-481)
NORTHERN BLVD. TO BEAR ROAD INTERCHANGE
ONONDAGA COUNTY

CAPITAL PROJECT IDENTIFICATION NO. 3107 0

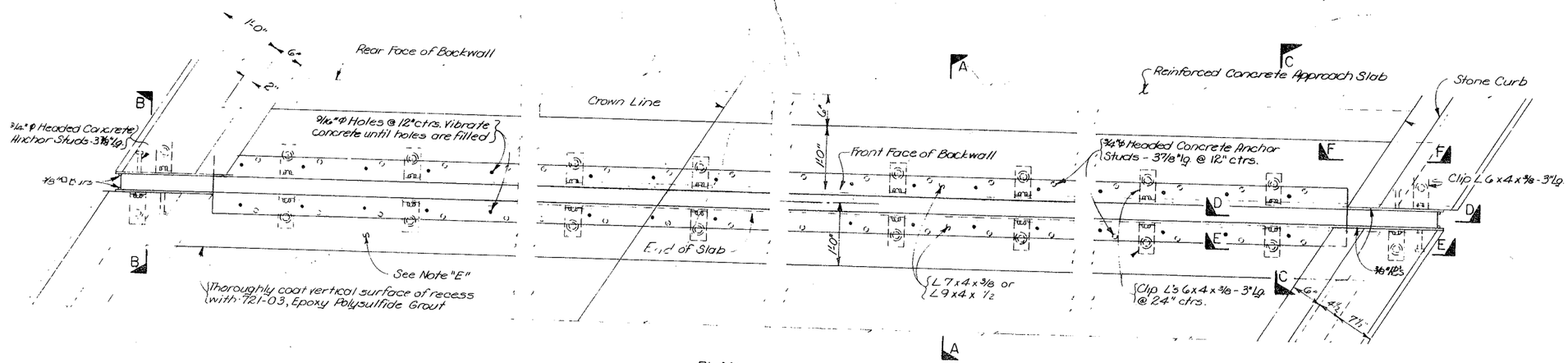

PLAN

ITEM 567.37 - ARMORED JOINT SYSTEM WITH COMPRESSION SEAL - TYPE A7 (SHOWN) - EAST ABUTMENTS

ITEM 567.31 - ARMORED JOINT SYSTEM WITH COMPRESSION SEAL - TYPE A1 (SIMILAR) - WEST ABUTMENTS

Scale: 1" = 1'-0"

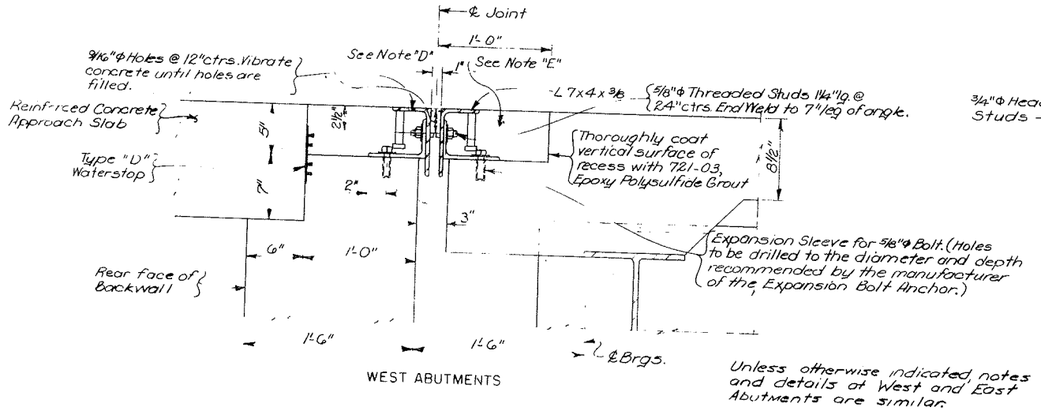

WEST ABUTMENTS

Unless otherwise indicated, notes and details at West and East Abutments are similar.

SECTION A-A

Scale: 1 1/2" = 1'-0"

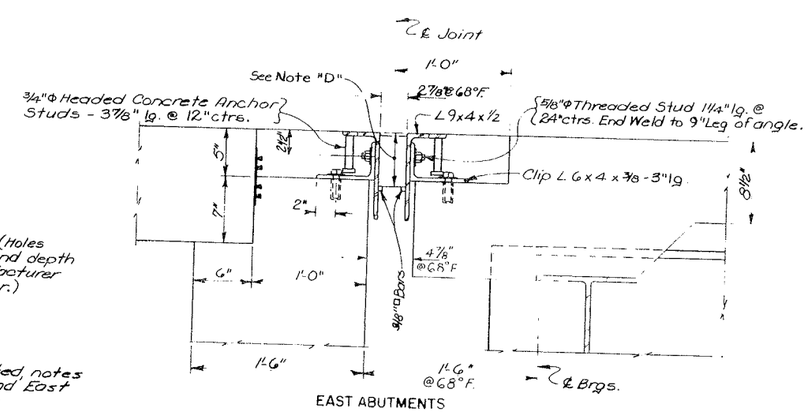

EAST ABUTMENTS

Note "D"
This depth shall be indicated on the sh drawings and shall be such that when the is compressed to 50% of its normal width top of the seal shall be not less than 1/4" nor more than 3/4" below the top of roadway.

Note "E"
Concrete in recesses on superstructure provided for installing the Armored Joint System shall comply with the Specification Item 15555.04, except that mach finishing will not be required. No additional payment will be made for furnishing and pl this concrete as the quantity lies within the of the area to be paid for under Item 15555

It is desirable to have the Armored Joint its Compression Seal assembled in the sho delivered to the job site all set for installation its preformed recess in the structural slab. cases where the Armored Joint cannot be assembled in the shop, due to its excessive length causing shipping problems, the join be sealed with the Compression Seal befor structure is opened to traffic, and before discontinuing operation when work is suspend during the Winter.

The cost of furnishing and placing the Epo Polysulfide Grout shall be included in the u price bid for Item 15555.04.

For details of Headed Concrete Anchor Stud Cutting and Bending Seal, see Dwg. No. 22 of 3

For Sections B-B thru F-F, see Dwg. No. 22 of 3

For details of Clip Angle, see Dwg. No. 22 of

STATE OF NEW YORK
DEPARTMENT OF TRANSPORTATION
DIVISION OF DESIGN AND CONSTRUCTION

Bridges 6 & 7 over Northern Blvd.

ARMORED JOINTS AT ABUTMENTS

PROJ. ENG.	DATE MADE
SQUAD	DRAWING NO. 21 OF 38

DESIGNED BY _____ DESIGN CHECKED BY _____ DETAILED BY _____ DETAIL CHECKED BY _____

BD 179a (7/80)

FED. RD. DIV. NO.	STATE	FEDERAL AID PROJECT NO.	SHEET NO.	TOTAL SHEETS
	NEW YORK	I-481-2(154) IR-81-2(154)	232	380

INTERSTATE RTE. 570 EXTENSION (I-481)
NORTHERN BLVD. TO BEAR ROAD INTERCHANGE
ONONDAGA COUNTY

CAPITAL PROJECT IDENTIFICATION NO. 3107.00 (01)

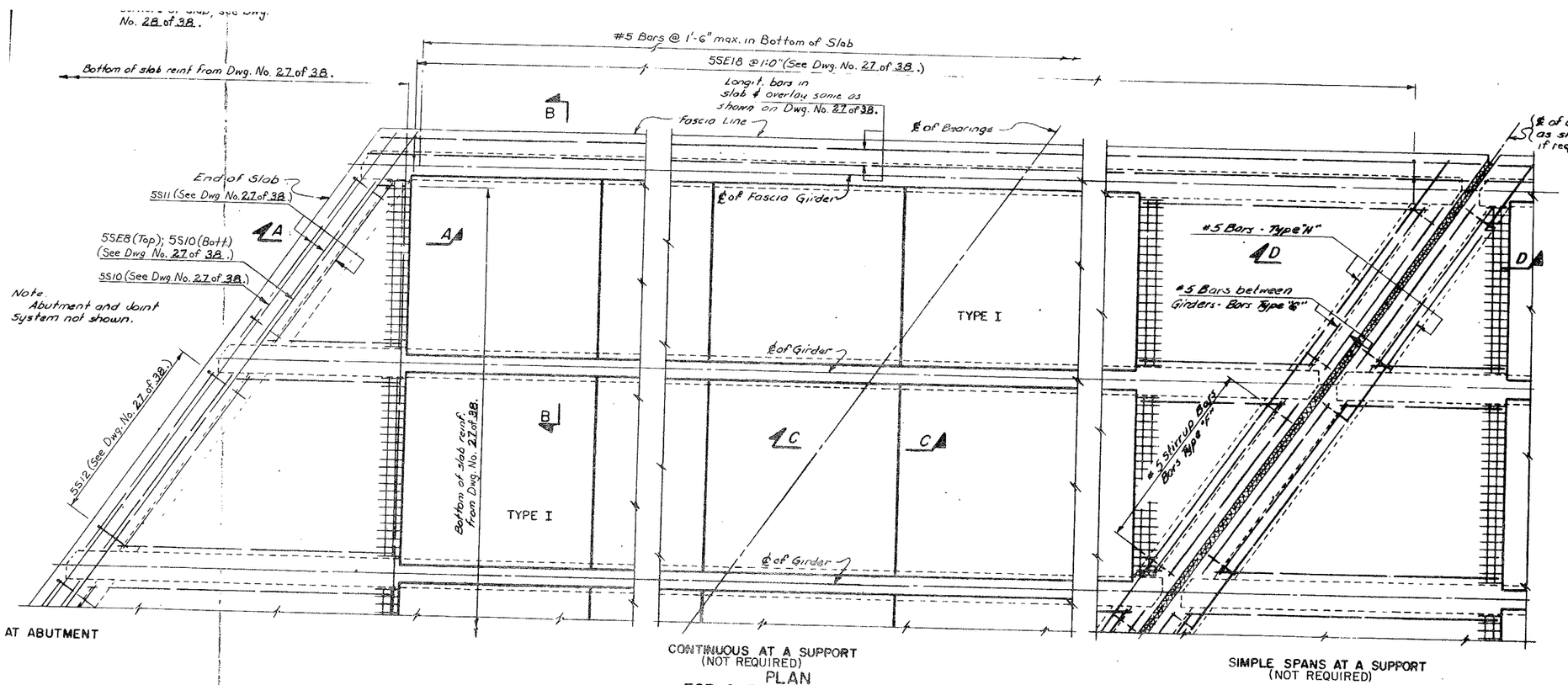

PLAN
FOR SKEWS 30° & OVER
PRESTRESSED CONCRETE FORM UNITS AND SURROUNDING REINFORCEMENT
(Reinforcement in the top of the slab not shown)

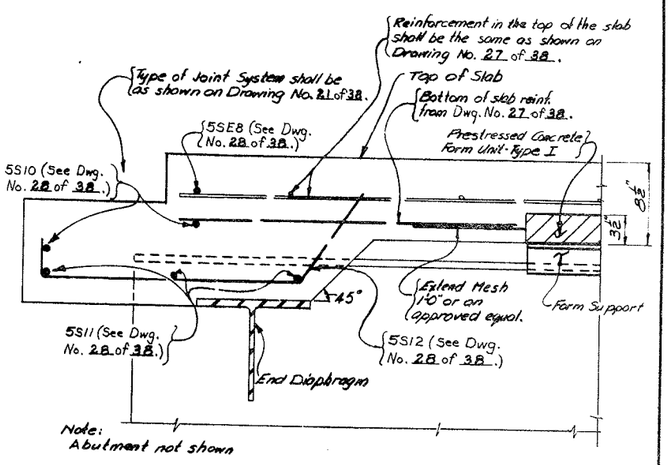

SECTION A-A
SCALE: 1 1/2" = 1'-0"

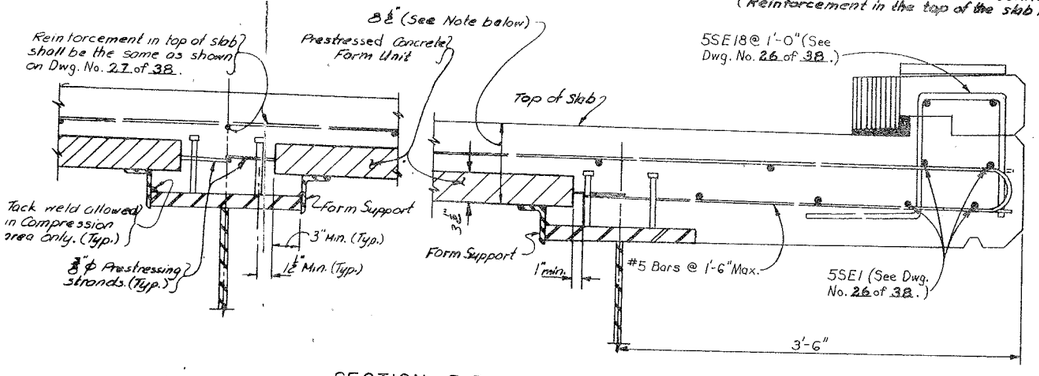

SECTION B-B
SCALE: 1 1/2" = 1'-0"

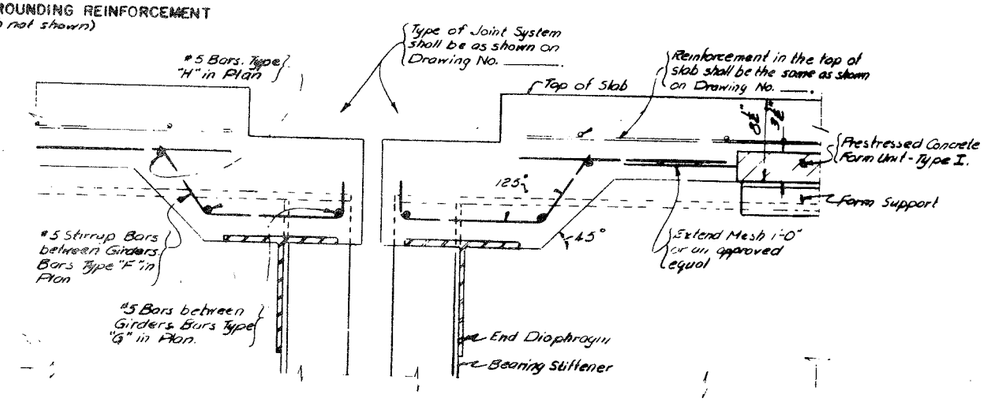

SECTION D-D
(NOT REQUIRED)

For details of Prestressed Concrete Form Units, see Dwg. No. 30 of 38.

Note:
The bottom of the Prestressed Concrete Form Unit shall be parallel to and 8½" below the finished top of the slab; except when the cross-slope of the slab changes between the Girders. In this case, the Prestressed Concrete Form Unit shall be set so the bottom is 8½" below the top of the slab at each edge of the Girder line.

NOTES:
1. No welding of form supports to the top flange in tension zones is allowed.
2. Minimum top flange width shall be 12 inches.

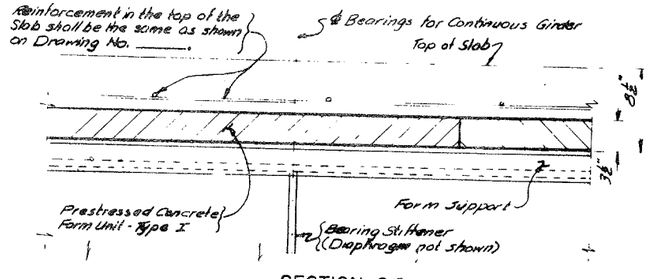

SECTION C-C
(NOT REQUIRED)

Details shown are for Bridge 7 (Bridge 6 similar)

Note: This drawing shows typical details, all of which may not be required on any given bridge. Likewise, the skew, beam spacing, and other details may not match those on the particular bridge.

STATE OF NEW YORK
DEPARTMENT OF TRANSPORTATION
DIVISION OF DESIGN AND CONSTRUCTION

Bridges 6 & 7 over Northern Blvd.

SUPERSTRUCTURE REINFORCEMENT
(For use with Prestressed Concrete Form Units)

PROJ. ENG. E. L. Barry | DATE MADE
CHKD. [illegible] | DRAWING NO. 29 OF 38

BIN: 1072592
I481 NB / Northern Blvd

DECK DETERIORATION PLAN

NOT TO SCALE

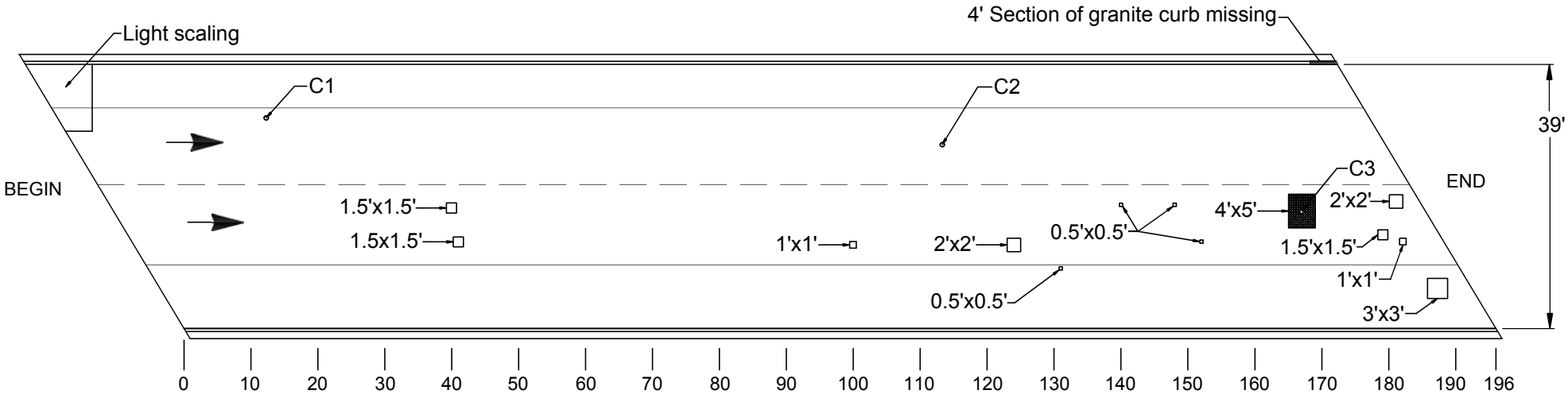

TOTAL DAMAGED AREA EQUALS 46.75 SF WHICH IS 0.6% OF DECK SURFACE

LEGEND

- Hollow Concrete
- Patch
- Coring location
- Crack

BIN: 1072592
I-481 NB / NORTHERN BLVD.

ABUTMENT DETERIORATION SKETCH

NOT TO SCALE

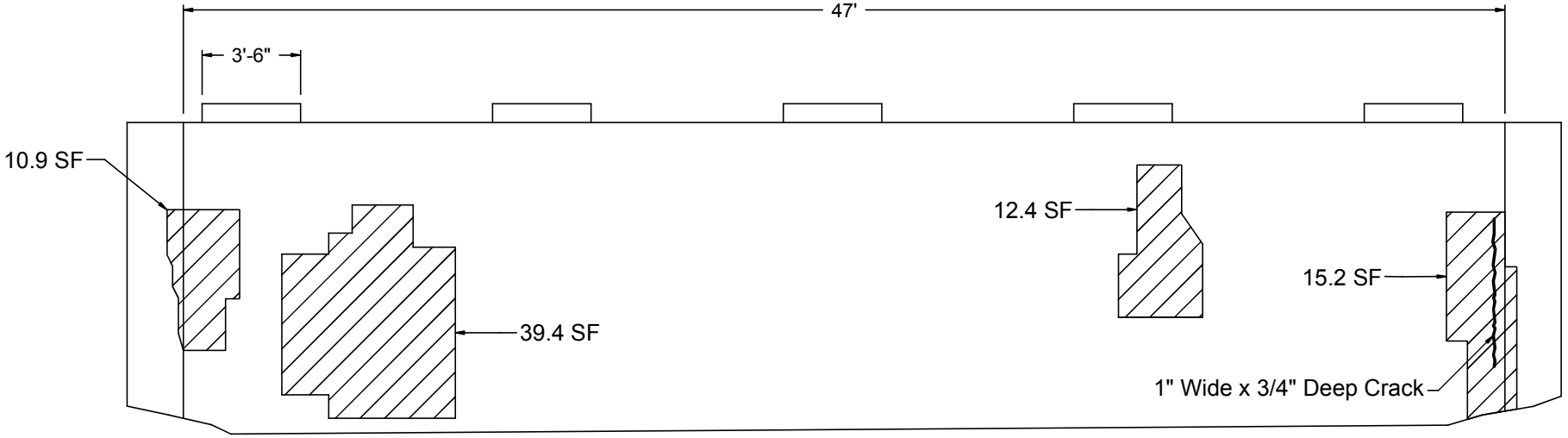

BEGIN ABUTMENT

LEGEND

HOLLOW CONCRETE

SPALL

IN-DEPTH PHOTO DOCUMENTATION

BIN: 1072592
I481 NB / Northern Blvd

IN-DEPTH INSPECTION
PHOTO LOCATION PLAN

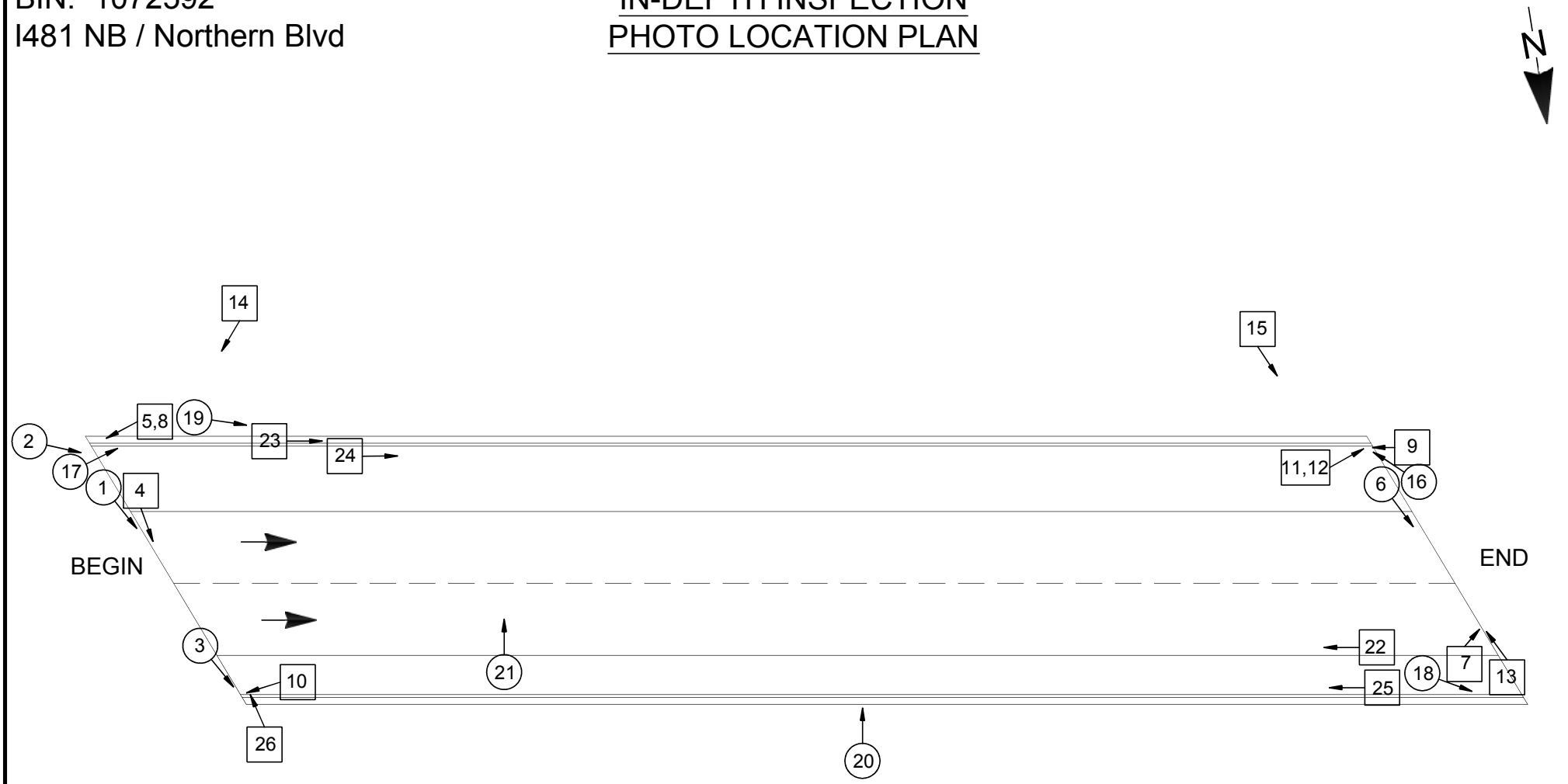

LEGEND

(XX) → Photo Above Deck

[XX] → Photo Below Deck

In-Depth Inspection Photos I-481 NB over Northern Blvd., BIN 1072592



DESCRIPTION: BEGIN JOINT (L-R)

PHOTO 1



DESCRIPTION: BEGIN JOINT HEADER AT LEFT

PHOTO 2



DESCRIPTION: BEGIN JOINT HEADER AT RIGHT

PHOTO 3



DESCRIPTION: BEGIN JOINT UNDERSIDE (L-R)

PHOTO 4



DESCRIPTION: BEGIN BACKWALL AT LEFT

PHOTO 5



DESCRIPTION: END JOINT (L-R)

PHOTO 6

In-Depth Inspection Photos I-481 NB over Northern Blvd., BIN 1072592



DESCRIPTION: END PEDESTAL 4 AT RIGHT

PHOTO 7



DESCRIPTION: BEGIN SEAT AT LEFT

PHOTO 8

In-Depth Inspection Photos I-481 NB over Northern Blvd., BIN 1072592



DESCRIPTION: END PEDESTAL 1 LEFT

PHOTO 9



DESCRIPTION: BEGIN BACKWALL AT TOP RIGHT

PHOTO 10



DESCRIPTION: END BACKWALL AT LEFT

PHOTO 11



DESCRIPTION: END BACKWALL AT TOP LEFT

PHOTO 12



DESCRIPTION: END JOINT UNDERSIDE (R-L)

PHOTO 13



DESCRIPTION: BEGIN ABUTMENT

PHOTO 14



DESCRIPTION: END ABUTMENT

PHOTO 15



DESCRIPTION: LEFT CURB AT END

PHOTO 16



DESCRIPTION: LEFT SAFETYWALK NEAR BEGIN (B-E)

PHOTO 17



DESCRIPTION: RIGHT SAFETYWALK AT END (L-R)

PHOTO 18

In-Depth Inspection Photos I-481 NB over Northern Blvd., BIN 1072592



DESCRIPTION: LEFT FASCIA (B-E)

PHOTO 19



DESCRIPTION: RIGHT SNOW FENCE POST (TYP.)

PHOTO 20



DESCRIPTION: DECK RIGHT LANE 35' FROM BEGIN (R-L)

PHOTO 21



DESCRIPTION: FRAMING FROM END

PHOTO 22

In-Depth Inspection Photos I-481 NB over Northern Blvd., BIN 1072592

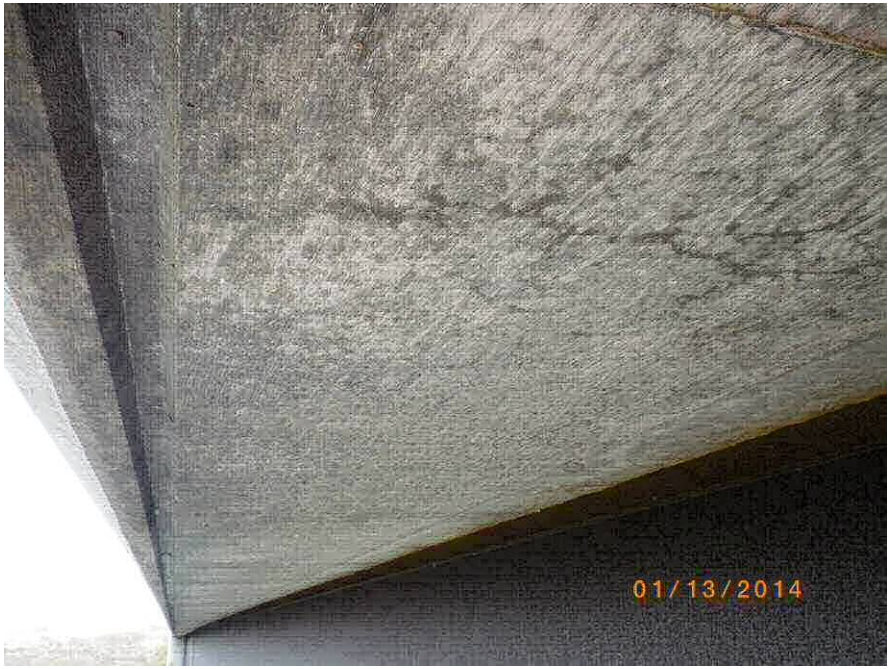

DESCRIPTION: LEFT DECK OVERHANG (B-E)

PHOTO 23

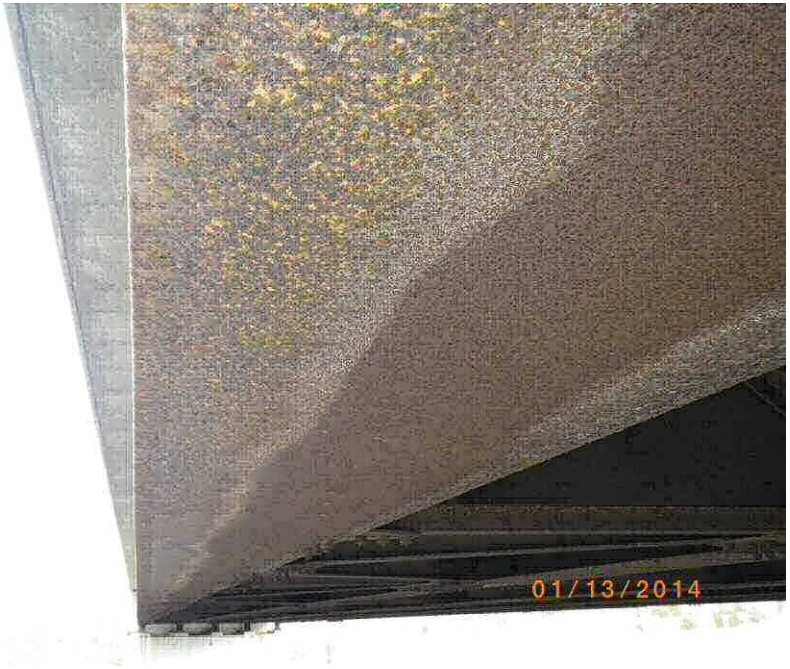

DESCRIPTION: GIRDER 1 BOTTOM FLANGE (B-E)

PHOTO 24

In-Depth Inspection Photos I-481 NB over Northern Blvd., BIN 1072592



DESCRIPTION: FASCIA GIRDER 5 (E-B)

PHOTO 25



DESCRIPTION: BEGIN ABUTMENT BEARING 5

PHOTO 26

ASBESTOS SAMPLING SURVEY

LATEST BIENNIAL INSPECTION REPORT

Inspection Date: 5/4/2012 RC: 33 BIN: 1072592

Bridge Ratings

Carried: 481I 481I33012128 Crossed: NORTHRN BLVD CR82 CheckValue: 1,792,362,220

Inspection Agency: 10 - NYSDOT Type of Inspection: 1 - BIENNIAL
GTMS: A02 -- Unpainted Steel - Stringer/Multi-Beam or Girder
POSTINGS: See Gen Rec Page 1 for Postings at time of inspection.
Further Investigation Needed: No
State Highway Number: 70-7 Milepoint: 14.98 AADT/Yr: 11858 / 2002
Orientation: 8 - Northwest Political Unit: 0161 - Town of CICERO Year Built: 1986
Total Spans: 1 Ramp Bridge Attached To Span: NA BIN: NA
General Recommendation: 6 Computed Condition Rating: 5.234

Abutment Ratings:	**Beg Abut**	**End Abut**
Joint with Deck	5	5
Bearings, Bolts, Pads	4	5
Seats and Pedestals	5	5
Backwall	5	5
Stem (Breastwall)	5	5
Erosion or Scour	6	6
Footings	9	9
Piles	8	8
Recommendation	5	5

Wingwall Ratings:	**Beg Abut**	**End Abut**
Walls	5	5
Footings	9	9
Erosion or Scour	6	6
Piles	8	8

Channel Ratings:	**Channel**
Stream Alignment	8
Erosion and Scour	8
Waterway Opening	8
Bank Protection	8

Approach Ratings:	**Approaches**
Drainage	5
Embankment	6
Settlement	4
Erosion	4
Pavement	4
Guide Railing	5

Number of Flags Issued:

RED: 0 Yellow: 0 Safety: 0

Vulnerability Reviews Recommended: 1=Yes, 2=No, 3=NA, X=NotActive

Hydraulic: 3	Overload: X	Steel: 2
Collision: 2	Concrete: X	Seismic: X

Inspector's Signature: CheckValue: 1,792,362,220 Date: 5/4/2012

Bruce Opalka,PE () (Inspector ID:3000038)

Signed copy of this inspection report is available in the appropriate NYSDOT Regional Office

Reviewed By: Date: 5/31/2012

James R. Manning,PE () (QC ID:3000023)

Signed copy of this inspection report is available in the appropriate NYSDOT Regional Office

Inspection Date: 5/4/2012 RC: 33 BIN: 1072592

Span Ratings

Carried: 481I 481I33012128 Crossed: NORTHRN BLVD CR82 CheckValue: 1,792,362,220

Deck Element Ratings:	**001**
Wearing Surface	5
Curbs	3
Sidewalks, Fascias	5
Railings, Parapets	5
Scuppers	8
Gratings	8
Median	8
Mono Deck Surface	6

Superstructure Ratings:	**001**
Structural Deck	6
Primary Members	6
Secondary Members	6
Paint	5
Joints	8
Recommendation	6

Pier Ratings:	**001**
Bearings, Bolts, Pads	8
Pedestals	8
Top of Cap or Beam	8
Stem Solid Pier	8
Cap Beam	8
Pier Columns	8
Footings	8
Erosion or Scour	8
Piles	8
Recommendation	8

Utility Ratings:	**001**
Lighting	8
Sign Structure	8
Utilities and Support	8

Field Notes:

Field Date	Arrival	Departure	Temp (C)	Temp (F)	Weather Conditions
5/4/2012	9:00:00 AM	12:00:00 PM	16	60	overcast

Inspection Date: 5/4/2012 RC: 33 BIN: 1072592

Inspection Notes

Carried: 481I 481I33012128 Crossed: NORTHRN BLVD CR82 CheckValue: 1,792,362,220

Note ID: 321210725920000

Beg Abut -- Abutment: Bearings, Bolts, Pads -- Rated 4, Was 4
Referenced Photos: "7", "8"
2012: All bearings are slightly over extended on this 60 degree day with the over extension increasing in the bearings from left to right. Bearing #5 is worst at 5` tilt. See form BD 245.

Note ID: 321210725920002

Approaches: Settlement -- Rated 4, Was 4
Referenced Photos: "3"
2012 - Previous concrete approach potholes have been patched. At the begin right asphalt approach pavement is breaking up and has a transverse crack approx. 6" out. At the end of the end concrete approach, the pavement has had some asphalt placed in the, approx. 3" wide breaking up of asphalt, but the traffic still slaps the asphalt and is cracking in this location.

Note ID: 321210725920003

Approaches: Erosion -- Rated 4, Was 4
Referenced Photos: "4"
2012 - The end right erosion gully has formed just after approach granite curb runout. The approx. area is 2' wide by 2' deep.

Note ID: 321210725920004

Approaches: Pavement -- Rated 4, Was 4
Referenced Photos: "1"
2012 - Previous concrete approach potholes have been patched. At the begin right asphalt approach pavement is breaking up and has a transverse crack approx. 6" out. At the end of the end concrete approach, the pavement has had some asphalt placed in the, approx. 3" wide breaking up of asphalt, but the traffic still slaps the asphalt and is cracking in this location. Potholing along edges of both approach slabs.

Note ID: 321210725920005

Span 001 -- Deck Elements: Curbs -- Rated 3, Was 5
Referenced Photos: "2"
2012 End left section of curb has become dislodged.
Other section are becoming debonded.

Note ID: 321210725920001

End Abut -- Abutment: Bearings, Bolts, Pads -- Rated 5, Was 4
Referenced Photos: "5"
2012: As per discussion at the annual Bridge Inspectors meeting in Albany for 2012, loose anchor bolt do not constitute lowering of rating, rate '5' overall.

Inspection Date: 5/4/2012 RC: 33 BIN: 1072592

Inspection Notes

Carried: 481I 481I33012128 Crossed: NORTHRN BLVD CR82 CheckValue: 1,792,362,220

Note ID: 321210725920006

End Abut -- Abutment: Backwall -- Rated 5, Was 5
Referenced Photos: "6"
2012 End left corner of backwall has minor spalling.
No change of rating.

Inspection Date: 5/4/2012 RC: 33 BIN: 1072592

Inspection Photos in Photo Number Order

Carried: 481I 481I33012128 Crossed: NORTHRN BLVD CR82 CheckValue: 1,792,362,220

Beginning approach pavement.
Viewed from beginning right looking left.



Photo Number: 1 Photo Filename: 100_5020 (Small).J

End left curb.
Viewed from end left quad.



Photo Number: 2 Photo Filename: 100_5024 (Small).J

Inspection Date: 5/4/2012 RC: 33 BIN: 1072592

Inspection Photos in Photo Number Order

Carried: 481I 481I33012128 Crossed: NORTHRN BLVD CR82 CheckValue: 1,792,362,220

End approach pavement and settlement.
Viewed from end left corner.



Photo Number: 3 Photo Filename: 100_5025 (Small).J

End right approach erosion gully.
Viewed from end right corner.



Photo Number: 4 Photo Filename: 100_5026 (Small).J

Inspection Date: 5/4/2012 RC: 33 BIN: 1072592

Inspection Photos in Photo Number Order

Carried: 481I 481I33012128 Crossed: NORTHRN BLVD CR82 CheckValue: 1,792,362,220

End left fascia bearing.
Viewed from end left corner.

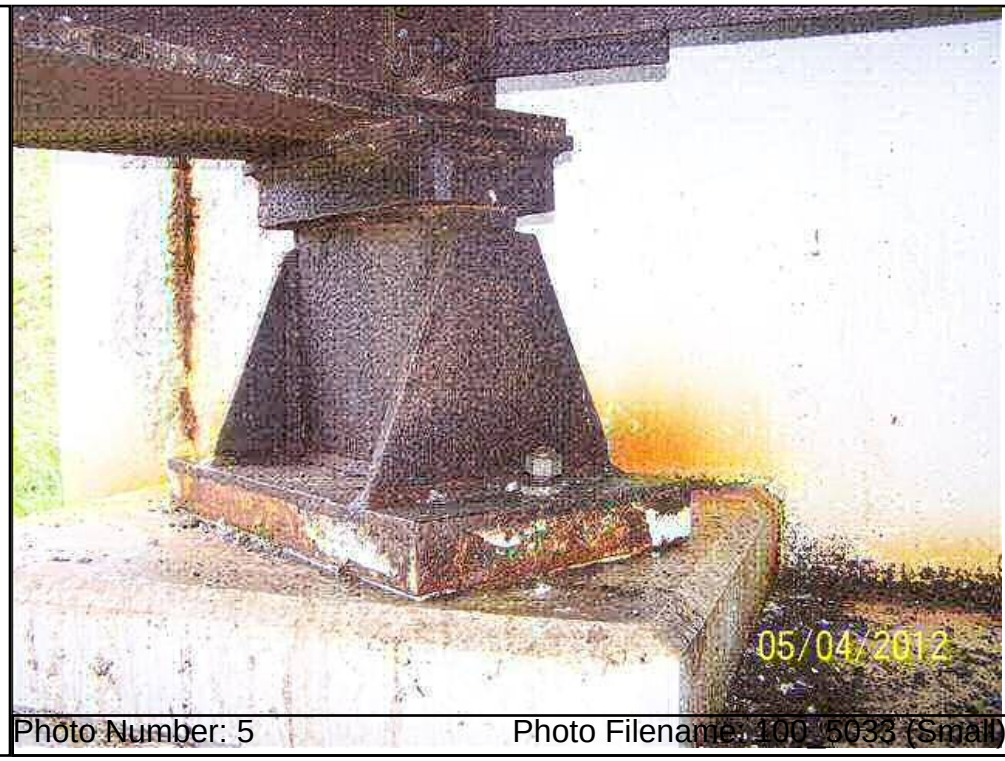

Photo Number: 5 Photo Filename: 100_5033 (Small).J

End abutment backwall spalled.
Viewed from end left corner.



Photo Number: 6 Photo Filename: 100_5034 (Small).J

Inspection Date: 5/4/2012 RC: 33 BIN: 1072592

Inspection Photos in Photo Number Order

Carried: 481I 481I33012128 Crossed: NORTHRN BLVD CR82 CheckValue: 1,792,362,220

Beginning abutment bearing #4, typical.
Viewed from beginning bay #3.



Photo Number: 7 Photo Filename: 100_5039 (Small).J

Beginning abutment right fascia bearing.
Viewed from beginning right corner.



Photo Number: 8 Photo Filename: 100_5040 (Small).J

Inspection Date: 5/4/2012 RC: 33 BIN: 1072592

Inspection Sketches in Sketch SysID Order

Carried: 481I 481I33012128 Crossed: NORTHRN BLVD CR82 CheckValue: 1,792,362,220

Sketch ID: 321210725920000 Sketch Filename: LdRatNC.12

General Sketch for Bridge
Referenced Photos:

Region 3 LoadRatingFieldCheckForm

NYSDOT BRIDGE INSPECTION REPORT			
SHEET	1	OF	1

LOAD RATING FIELD CHECK FORM

BIN:	1072592	Insp. Date:	05/04/2012

Dead Load - Note Changes since Last load Rating or state "NONE":

NONE

Section Loss -Note Changes since Last load Rating or state "NONE":

NONE

Additional Notes:

NONE

Attachments:

Team Leader: BRUCE OPALKA

Inspection Date: 5/4/2012 RC: 33 BIN: 1072592

Inspection Sketches in Sketch SysID Order

Carried: 481I 481I33012128 Crossed: NORTHRN BLVD CR82 CheckValue: 1,792,362,220

Sketch ID: 321210725920001 Sketch Filename: BD245.12

Beg Abut -- Abutment: Bearings, Bolts, Pads -- Rated 4, Was 4
Referenced Photos: "7", "8"

BD 245

NYSDOT BRIDGE INSPECTION REPORT
SHEET 1 OF 1

TA Rocker 05-001

Insp. Date:		BIN:	1072592

Inspection and Monitoring Requirements for High Rocker Bearings , dimensions in (english).

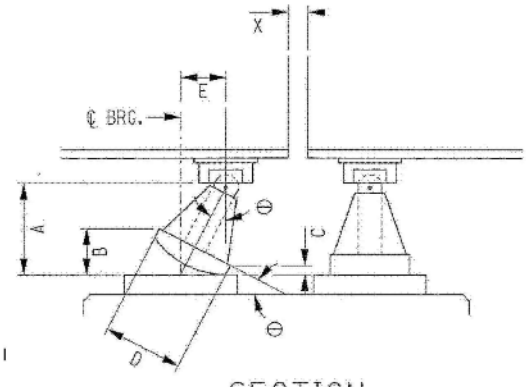

SECTION

Rocker Bearing Field Documentation Summary

1. Reference Sketch:
A = Height of rocker
B = High corner of rocker plate
C = Low corner of rocker plate
D = width of rocker plate
θ = Angle of rotation (tilt)
E = Eccentricity (translation)
X = minimum clear distance between girders or from girder to abutment

Date	Bearing Location	Ambient Temp	Dim "A"	Dim "B"	Dim "C"	Dim "D"	Dim "X"	Angle "θ"	Dim "E"
06/14/06	G5, right fascia,	78 F	344	93	55	305	400	7	33
	overextended								
06/14/06	G5, right fascia, engl	78 F	13.5	3.5	2.2	12	15.8	7	1.3
05/20/08	G5, right fascia, engl	60 F	13.5	3.5	2.2	12	15.0	7.5	1.3
5/3/10	G5, Rt fascia	70 F	13.5"	3.5"	2.25"	12"	15"	5	1.0"
5/4/12	G5, Rt fascia	60 F	13.5"	3.5"	2.25"	12"	15"	5`	------

Inspection Date: 5/4/2012 RC: 33 BIN: 1072592

Gen. Rec., Postings, Federal Ratings, etc.

Carried: 481I 481I33012128 Crossed: NORTHRN BLVD CR82 CheckValue: 1,792,362,220

Overall Condition:

GENERAL RECOMMENDATION: 6

Computed Condition Rating: 5.234

Problems Requiring Action:

NO Further Investigation Needed

NO Flags Issued

POSTINGS:

Inspector Confirmed existing Posting data as correct.
Posted Vertical Clearance ON the bridge is: No Posting
Posted Vertical Clearance UNDER the bridge is: No Posting
No Load Restriction is posted on this bridge

Overloads Observed:

NO Overload Vehicles were observed on this bridge

FEDERAL RATINGS:

NBI Deck Condition: 7
NBI Superstruct Condition: 7
NBI Substruct Condition: 7
NBI Channel Condition: N
NBI Culvert Condition: N

Diving Inspection Needs:

Diving Inspection Required? No Date of Last Diving Inspection: No Date

Inventory Problems:

Inventory Problems Exist? No

Miscellaneous:

Time Required to Inspect Bridge: 3 Hours

Lane Closure Needs: None Required

No Railroad Flagging Required

No Pedestrian Fence

There is a Snow Fence present

The BIN Plate is in OK condition

Inspection Date: 5/4/2012 RC: 33 BIN: 1072592

Gen. Rec., Postings, Federal Ratings, etc.

Carried: 481I 481I33012128 Crossed: NORTHRN BLVD CR82 CheckValue: 1,792,362,220

Special Emphasis Inspection Required:

Non-Redundant/Fracture Critical Members - No
Pin and Hangers - No
Fatigue-Prone Welds - No
Non-Categorized Fatigue-Prone Details - No
Other (Specified in Text) - No

Special Emphasis Details:

No Special Emphasis Inspection Required.

General Notes To the Next Inspector:

There is a camera pole at the begin right which needs to be inspected with this bridge. BIN plate is located on top right corner of beginning stem.

Improvements Observed:

Both stems and wingwalls have been epoxy painted since last inspection and bearings have been cleaned and coated. The VC of each bridge was checked because it appears to have been repaved since last inspection. The Max VC is 15' - 9" and the Min VC is 14' - 8".

Inspection Date: 5/4/2012 RC: 33 BIN: 1072592

Review Progress and Personnel Present at Inspection

Carried: 481I 481I33012128 Crossed: NORTHRN BLVD CR82 CheckValue: 1,792,362,220

Inspection Submission Status:

Submitted to QC Engineer on: 5/10/2012
QC Submission Number: 253204

QC Review Completed: 5/31/2012
QC Engineer: James R. Manning

Submitted to Liaison Engineer on: 6/29/2012
Liaison Submission Number: 53209

Liaison Review Completed: 7/10/2012
Liaison Engineer: TODD M. HERMANN

Submitted for BIIS Processing on: 7/11/2012
BIIS Submission Number: .kp1

Current Status: Keypunched, Sent to BIIS
Check Value: 1,792,362,220

Personnel Present During Inspection:

Bruce Opalka - Team Leader
Keith Way - Assistant Team Leader

Inspection Date: 5/4/2012 RC: 33 BIN: 1072592

Inspection Access Requirements

Carried: 481I 481I33012128 Crossed: NORTHRN BLVD CR82 CheckValue: 1,792,362,220

Equipment Required for Inspection

No Access Requirement Changes Noted During This Inspection.
This Listing is from the Inventory Database.

ACCESS CATEGORIES FOR ENTIRE BRIDGE
Required: Walking, Extension Ladder

ACCESS CATEGORIES FOR SPAN 1
Required: Walking, Extension Ladder

Inspection Date: 5/4/2012 RC: 33 BIN: 1072592

Culvert Measurements

Carried: 481I 481I33012128 Crossed: NORTHRN BLVD CR82 CheckValue: 1,792,362,220

Culvert Measurements

NO CULVERT DATA FOR BIN 1072592

Standard Photos **RC: 33 BIN: 1072592**

Carried: 481I 481I33012128 Crossed: NORTHRN BLVD CR82

1072592_LOCATION_MAP.JPG

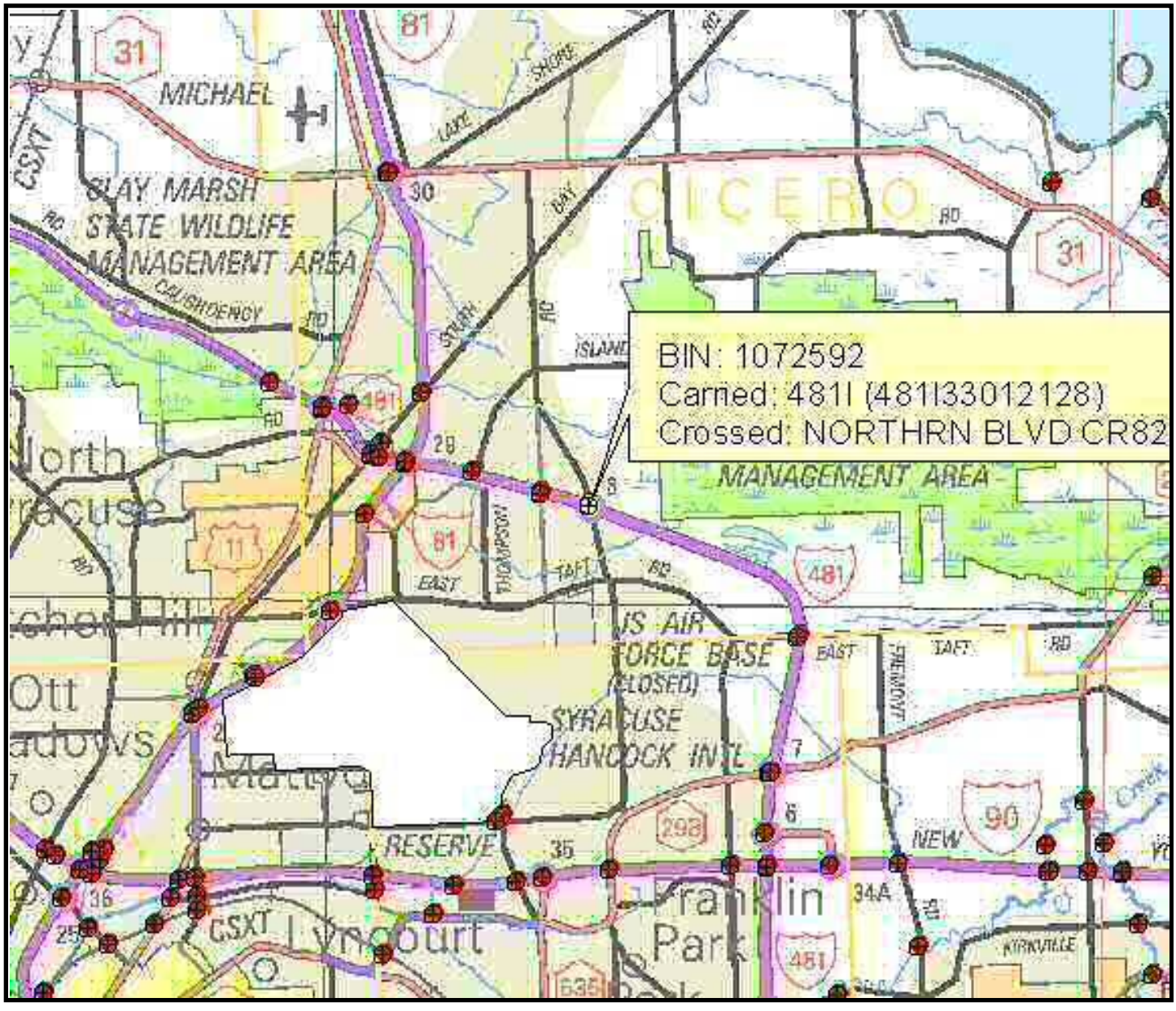

Standard Photos **RC: 33 BIN: 1072592**

Carried: 481I 481I33012128 Crossed: NORTHRN BLVD CR82

1072592_QUAD_MAP.JPG

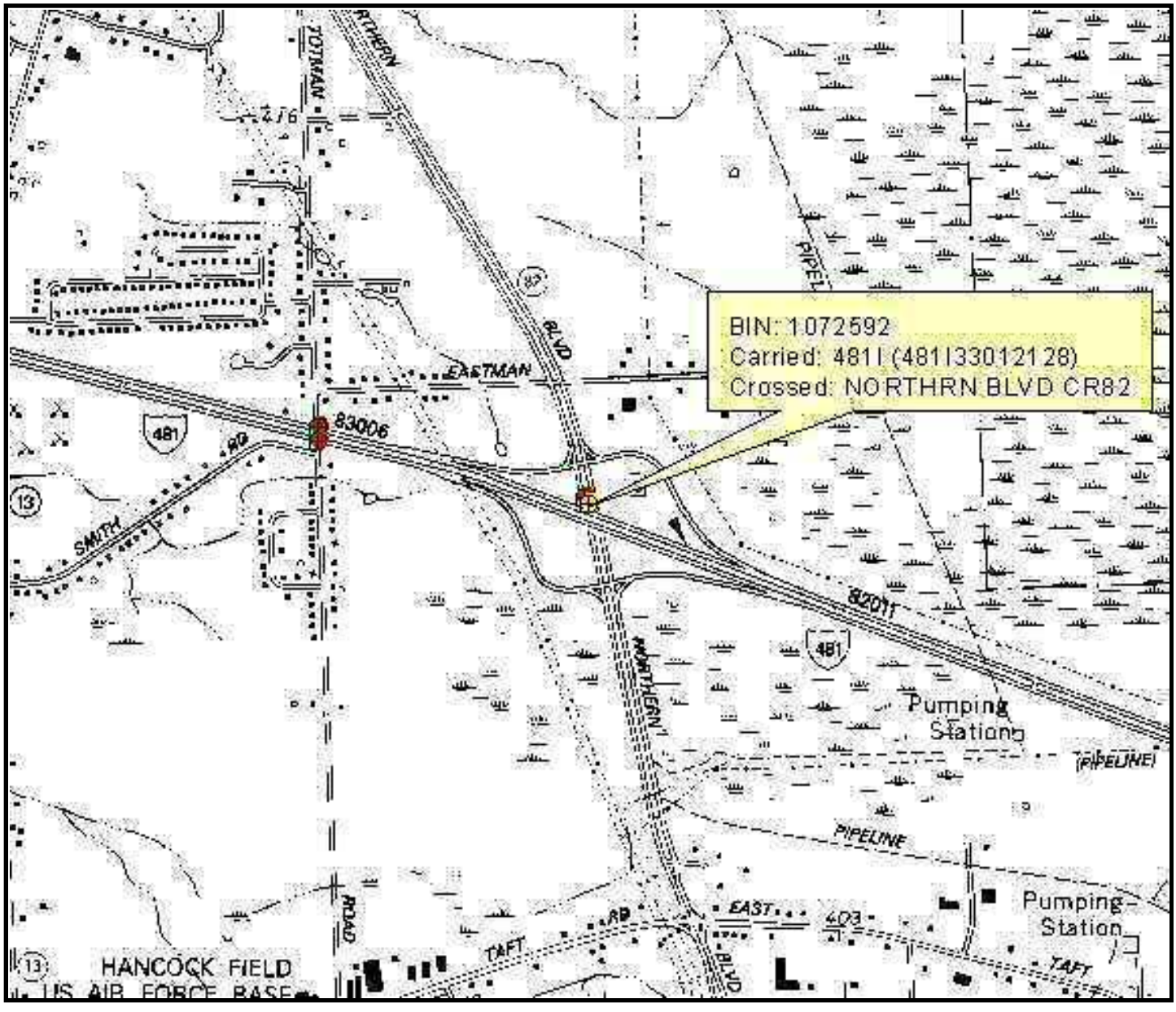

Standard Photos **RC: 33 BIN: 1072592**

Carried: 481I 481I33012128 Crossed: NORTHRN BLVD CR82

Abutment Begin.12.JPG

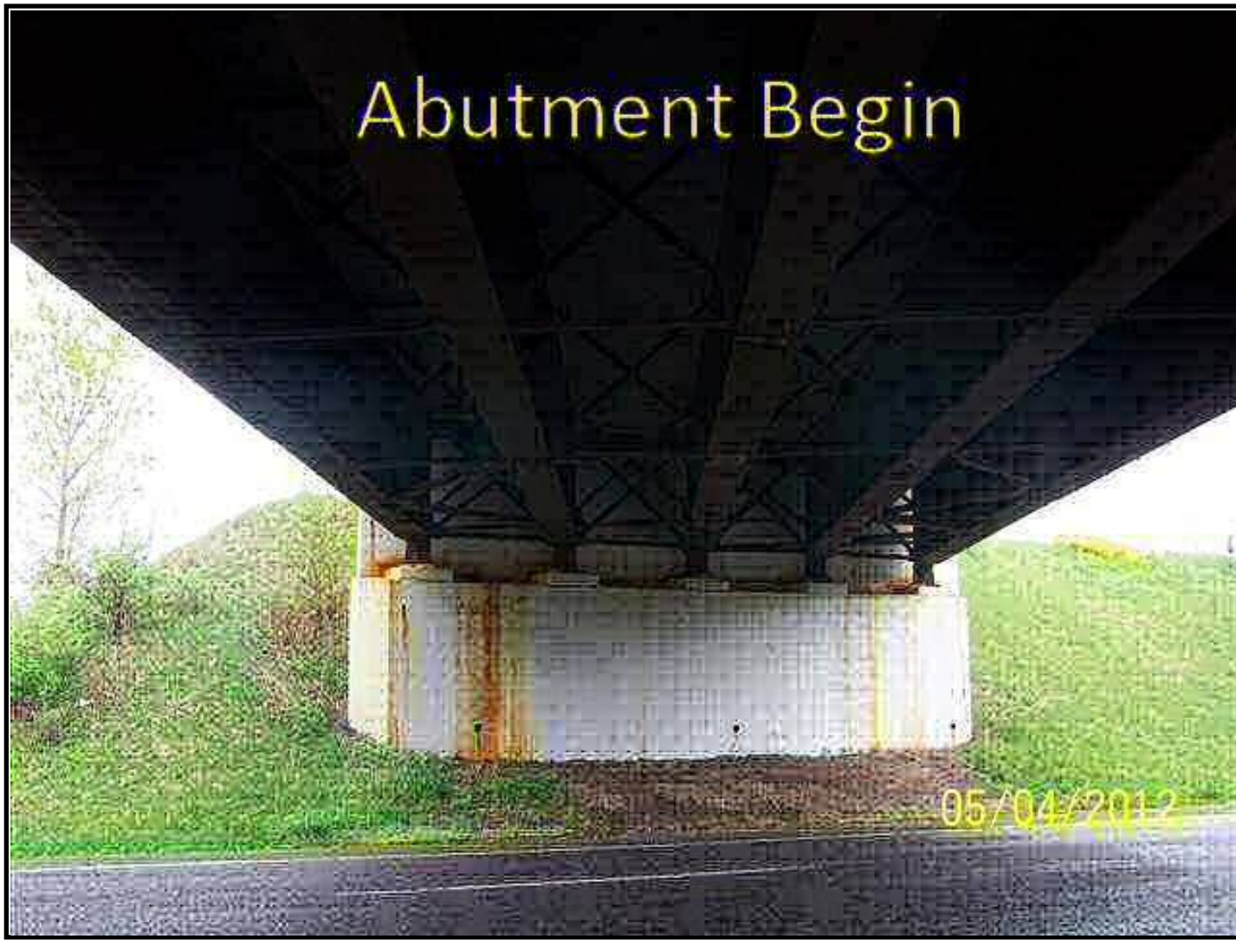

Standard Photos **RC: 33 BIN: 1072592**

Carried: 481I 481I33012128 Crossed: NORTHRN BLVD CR82

Abutment End.12.jpg



Standard Photos **RC: 33 BIN: 1072592**

Carried: 481I 481I33012128 Crossed: NORTHRN BLVD CR82

Approach Begin.12.JPG



Standard Photos **RC: 33 BIN: 1072592**

Carried: 481I 481I33012128 Crossed: NORTHRN BLVD CR82

Approach End.12.JPG



Standard Photos **RC: 33 BIN: 1072592**

Carried: 481I 481I33012128 Crossed: NORTHRN BLVD CR82

BegAbutWing.02.JPG

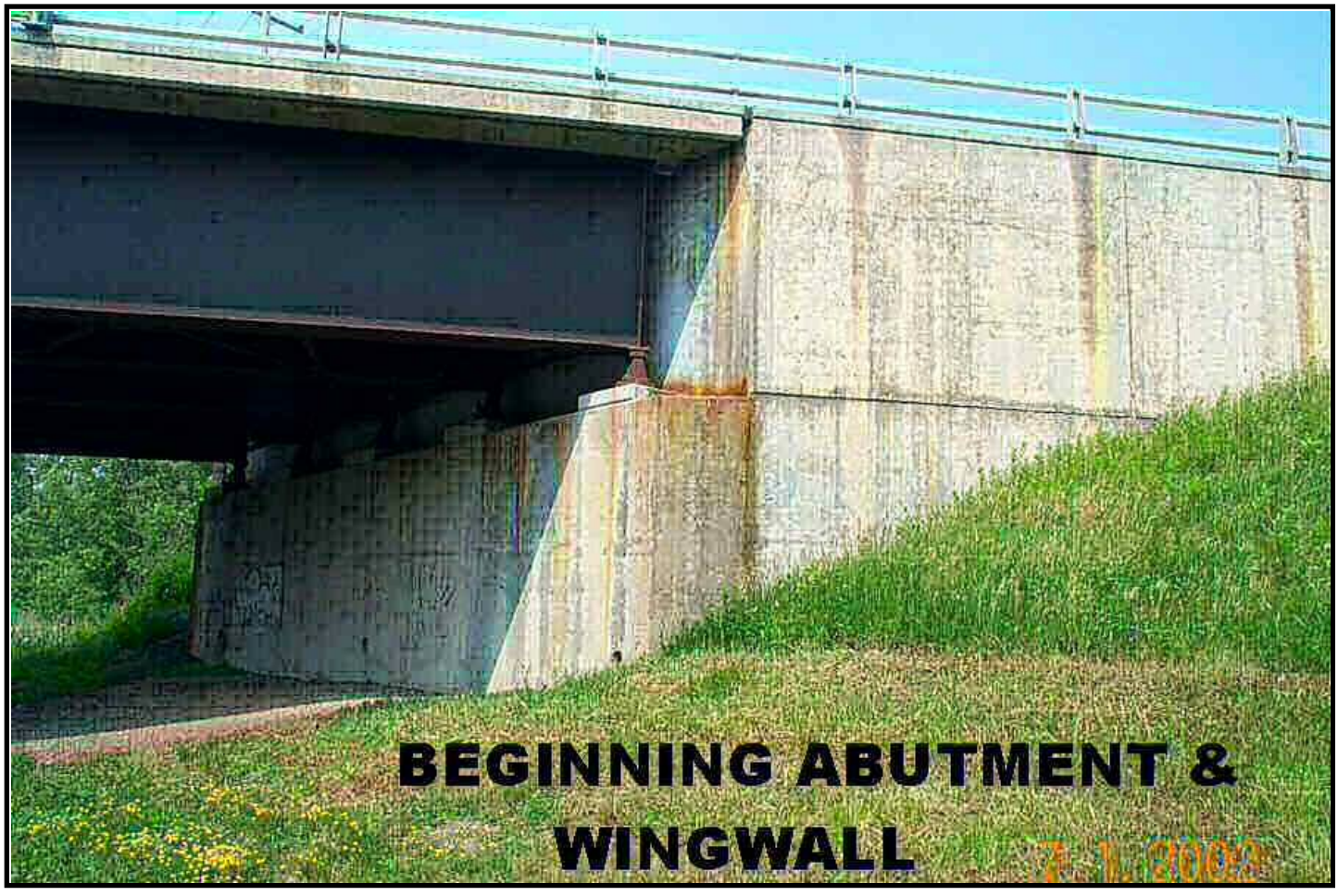

Standard Photos **RC: 33 BIN: 1072592**

Carried: 481I 481I33012128 Crossed: NORTHRN BLVD CR82

BegApproach.02.JPG



Standard Photos **RC: 33 BIN: 1072592**

Carried: 481I 481I33012128 **Crossed: NORTHRN BLVD CR82**

CrossedLeft.02.JPG



Standard Photos **RC: 33 BIN: 1072592**

Carried: 481I 481I33012128 Crossed: NORTHRN BLVD CR82

CrossedRight.02.JPG

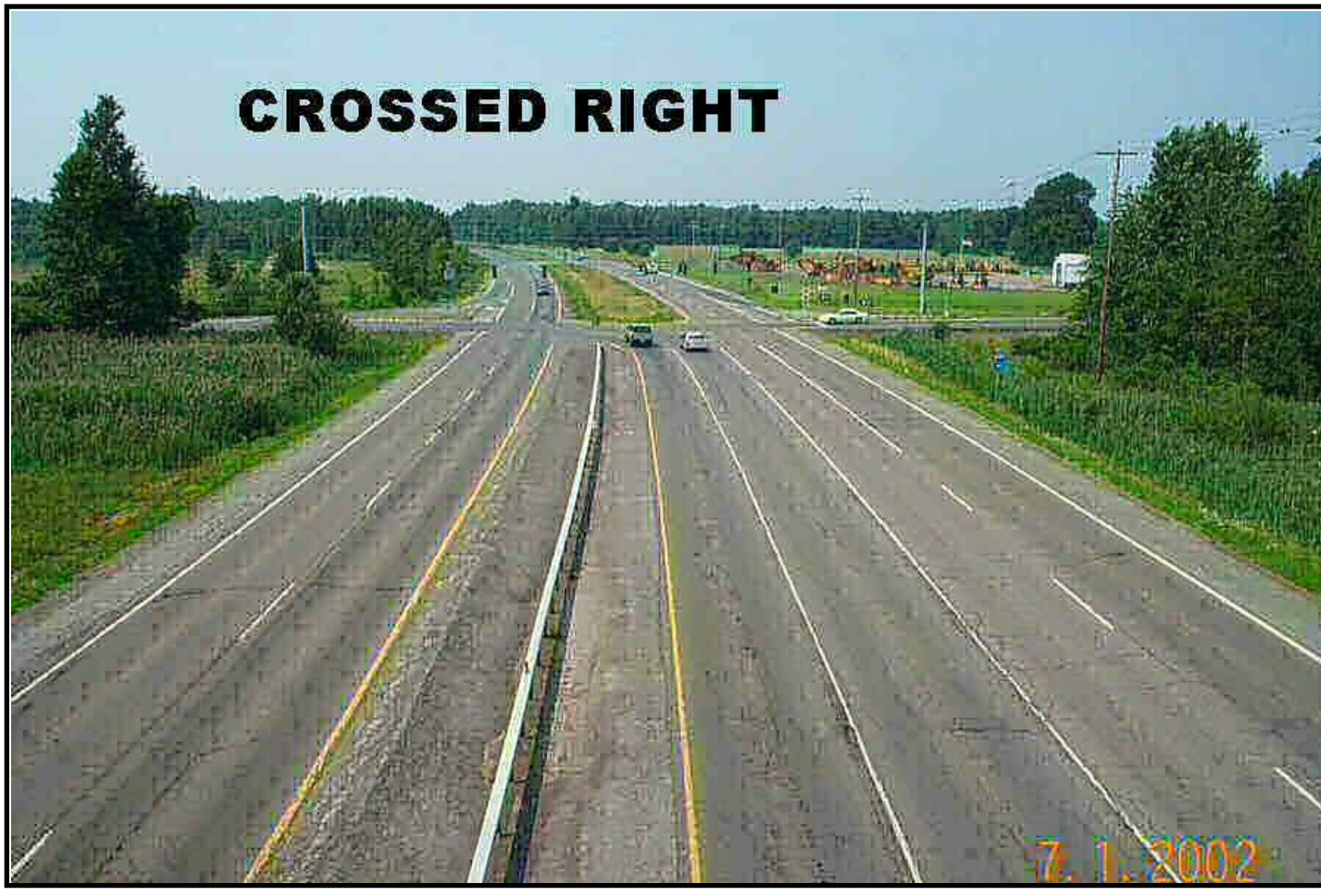

Standard Photos **RC: 33 BIN: 1072592**

Carried: 481I 481I33012128 **Crossed: NORTHRN BLVD CR82**

Elevation Right.12.JPG



Standard Photos **RC: 33 BIN: 1072592**

Carried: 481I 481I33012128 Crossed: NORTHRN BLVD CR82

EndApproach.02.JPG



Standard Photos **RC: 33 BIN: 1072592**

Carried: 481I 481I33012128 **Crossed: NORTHRN BLVD CR82**

Feature Crossed Left .12.JPG



Standard Photos **RC: 33 BIN: 1072592**

Carried: 481I 481I33012128 Crossed: NORTHRN BLVD CR82

Feature Crossed Right.12.JPG



Standard Photos **RC: 33 BIN: 1072592**

Carried: 481I 481I33012128 Crossed: NORTHRN BLVD CR82

FrameUnderneath.02.JPG



Framing View.12.JPG



Standard Photos **RC: 33 BIN: 1072592**

Carried: 481I 481I33012128 Crossed: NORTHRN BLVD CR82

LeftElevation.02.JPG



LEVEL 1 LOAD RATING SUMMARY SHEET

Region/County Region 3/Onondaga BIN 1072592
Feature(s) Carried and Crossed I-481 Northbound/Northern Blvd.
Date of field inspection upon which Level 1 rating is based 1/14/2014

OVERALL BRIDGE RATINGS (BASED ON LOWEST RATED ELEMENTS):

Total number of rating units 1

	H inventory	H operating	HS inventory	HS operating
Rating	H 34.10 (tons)	H 56.95 (tons)	HS 61.38 (tons)	HS 102.50 (tons)
Lowest rated element	Interior Girder G9	Interior Girder G9	Interior Girder G9	Interior Girder G9

Analysis method LFR Comments

Individual Rating Unit Level 1 values:

Rating unit span(s) 1

Main member ratings

	H inventory	H operating	HS inventory	HS operating
Rating	H (tons)	H (tons)	HS (tons)	HS (tons)
Lowest rated element				

Analysis method Comments

Floorbeam ratings

	H inventory	H operating	HS inventory	HS operating
Rating	H (tons)	H (tons)	HS (tons)	HS (tons)
Lowest rated element				

Analysis method Comments

Stringer ratings

	H inventory	H operating	HS inventory	HS operating
Rating	H 34.10 (tons)	H 56.95 (tons)	HS 61.38 (tons)	HS 102.50 (tons)
Lowest rated element	Interior Girder G9	Interior Girder G9	Interior Girder G9	Interior Girder G9

Analysis method LFR Comments

Certified by Date

Quality Control Engineer Signature Date
Agency or Company represented by certifier

Note:
-If connection ratings govern, record them under stringer ratings for stringer – floorbeam connection, floorbeam ratings for floorbeam-main member connections, etc.
-When Level 1 results indicated the need for load posting or other corrective action, the NYSDOT Regional Structures Engineer shall be notified immediately.
-Load ratings should be filed in the regional office within 60 days of completion of calculations.
-Bridges shall be flagged based on Level I results in accordance with the current NYSDOT flagging procedure.
-Bridge load posting, closure, etc. determinations shall be made as results are being produced.

PARSONS

100 Broadway
New York, NY 10005
Phone: 212-266-8300
Fax: 212-571-6825
www.parsons.com

TECHNICAL MEMORANDUM

FROM: Kian Siang Chau, P.E
NYSPE 082744

DATE: MARCH 26, 2014

RE: SEISMIC SCREENING SUMMARY
NEW YORK STATE DEPARTMENT OF TRANSPORTATION
D031085; PIN 3501.60; I-81

BIN: 1072592 (I-481 NB/Northern Blvd)

This memorandum summarizes the seismic screening conducted for BIN 1072592 as part of the Interstate 81 Project in Syracuse, NY. The purpose of the screening is to determine if seismic retrofits are warranted at the superstructure to substructure connection, and if further seismic evaluation of the structure is required. This memorandum will give the screening results, retrofits required and recommendations for further seismic evaluation of the structure.

SCREENING PROCEDURE

The seismic screening was performed in accordance with the FHWA Seismic Retrofitting Manual for Highway Structures: Part 1 - Bridges, January 2006. As per the referenced manual, seismic screenings were performed for both lower level and upper level earthquake ground motion. The lower level earthquake ground motion has a reasonable likelihood of occurrence within the life of the bridge (50% probability of exceedance within a 75 year bridge life). The upper level earthquake ground motion has a finite likelihood of occurrence within the life of the bridge (7% probability of exceedance within a 75 year bridge life).

Values for the spectral acceleration for the Syracuse area used in the screening are as follows:

- Lower Level Earthquake Ground Motion for a Short Period (0.2 seconds): $S_S = 0.0251$
- Lower Level Earthquake Ground Motion for a Long Period (1.0 seconds): $S_1 = 0.0076$
- Upper Level Earthquake Ground Motion for a Short Period (0.2 seconds): $S_S = 0.139$
- Upper Level Earthquake Ground Motion for a Long Period (1.0 seconds): $S_1 = 0.047$

These values are considered constant and are the same for all seismic screenings of bridges in the Syracuse area.

The Site Class is based on the soil conditions at the bridge location. It was determined that this parameter has little effect on the results of the seismic screening because the spectral acceleration values for the Syracuse area are small. Based on this, a site class of D was used for all seismic screenings of bridges in the Syracuse area.

Bridge parameters used in the seismic screening were retrieved from the record drawings and WinBolts data.

The seismic screening takes into account the anticipated service life, importance, and the seismic exposure of the bridge to determine a seismic retrofit category (SRC). The SRC is then used to determine seismic evaluation methods and retrofit measures. There are four SRCs, A through D. Seismic retrofit category A is the lowest category; bridges in this category do not require retrofits or further seismic evaluation. Seismic retrofit category D is the highest category; bridges in this category requiring the most rigorous seismic evaluations and retrofits.

SCREENING RESULTS

The SRC for the bridge is "**C**" for lower level earthquake ground motion and "**B**" for upper level earthquake ground motion.

RETROFITS REQUIRED

No seismic retrofits are required for the bridge superstructure to substructure connection.

RECOMMENDATIONS FOR FURTHER SEISMIC EVALUATION

No further seismic evaluation is required for lower level earthquake ground motion. For the upper level earthquake ground motion, it is recommended that the capacities of the bearings are checked as per Section 5.2 of the referenced manual.

Retrofit cost estimates will be provided after any further required seismic evaluations are completed.

BRIDGE DECK EVALUATION REPORT

RECOMMENDATIONS

The bridge deck inspection findings and evaluation are used as a tool for developing the scope of work and cost estimates for the development and comparison of alternatives for the overall project.

The total damaged area of the deck is 0.6% of the total deck surface area. The cores indicate the reinforcement steel is 2.5 inches to 3.0 inches below the surface of the deck. The lab test indicates that chloride ion concentrations at two of the three sample locations are significantly higher than the corrosion threshold for steel.

Due to the age, condition and high chloride ion content of the bridge deck concrete, the bridge deck should be rehabilitated or replaced to meet the current standards and to mitigate excessive future maintenance costs.

ALTERNATIVES

- Rehabilitation Alternative - 3 inches Bonded Concrete Overlay
  - Scope

    The scope of this alternative will include the complete removal of the bridge railings, curb and safety walks, and fascias to the level of the original top of the deck. The joint will be removed. The top 2 inches of the entire deck will be removed and areas of deteriorated concrete must be removed to at least 1 inch below the level of the reinforcement steel and to the horizontal and vertical limit of any detectable hollow areas. Additionally, any further areas of deteriorated concrete detected will require full depth removal. Any corrosion of the reinforcement steel will be removed by sandblasting or hydro-blasting. The proposed deck overlay will be a 3 inches thick bonded concrete overlay yielding a nominal 9.5 inches standard thickness deck. A new single-sloped concrete barrier and a new armorless joint will be installed. The Level 1 Load Rating for the final condition was found to be acceptable.

- Useful Life Expectancy

  The removal of the top 2 inches of the existing deck will remove a portion of the deck with high chloride ion concentrations. It can be anticipated that chloride ions will continue to migrate into the remaining deck to the reinforcing steel resulting in further corrosion-related deterioration of the deck surface. Concrete admixtures will be included in the bonded concrete overlay to impede the continued penetration of chloride into the deck from the surface. This alternative will result in an extended useful life expectancy estimated at 20 years.

The design life of the project is 30 years (ETC + 30). This alternative does not meet the project objectives of obtaining 30 years of service life and is not evaluated further.

- Rehabilitation Alternative – 100% Deep Removal and Partial Deck Reconstruction
  - Scope

    The scope of this alternative will include the complete removal of the bridge railings, curb and safety walks, and fascias to the level of the original top of the deck. The joint will be removed. The scope of this alternative will include partial depth reconstruction with removal of the concrete to at least 1 inch below the top mat of the reinforcement steel. Additionally, any further areas of deteriorated concrete detected will require full depth removal. Any corrosion of the reinforcement steel will be removed by sandblasting or hydro-blasting. Due to the condition of the deck, full depth removal is not likely and not included in the cost estimate. The proposed deck partial reconstruction will be a nominal 5.75 inches thick concrete deck yielding a 9.5 inches standard thickness deck. A new single-sloped concrete barrier and a new armorless joint will be installed. The Level 1 Load Rating for the final condition was found to be acceptable.
  - Useful Life Expectancy

    This alternative will provide a useful life expectancy is estimated at 35 years.
  - Cost Estimate

    The estimated cost for this alternative is $613,000. The Engineer's Opinion of Probable Construction Cost worksheet is at the end of this section.

- Replacement Alternative – Cast-In-Place Concrete
  - Scope

    This scope of this alternative will include the complete demolition of the existing bridge deck, bridge railings, curb and safety walks, fascias and bridge joint. The bridge deck will be replaced with a new 9.5 inches standard thickness concrete deck. A new single-sloped concrete barrier and a new armorless joint will be installed. The Level 1 Load Rating for the final condition was found to be acceptable.
  - Useful Life Expectancy

    This alternative will provide a useful life expectancy is estimated at 40+ years.
  - Cost Estimate

    The estimated cost for this alternative is $855,000. The Engineer's Opinion of Probable Construction Cost worksheet is at the end of this section.

- Replacement Alternative – Pre-cast Concrete Deck Panels
  - Scope

    The scope of this alternative is similar to the Cast-In-Place Concrete Deck Replacement Alternative except the deck structure will be precast panels. This alternative offers reduced construction time over conventional construction.
  - Useful Life Expectancy

    This alternative will provide a useful life expectancy is estimated at 40+ years.
  - Cost Estimate

    The comparison of accelerated construction to conventional construction is beyond the current scope of this evaluation.

IN-DEPTH INSPECTION REPORT

D031085 P.I.N. 3501.60

ELEMENT SPECIFIC BRIDGE WORK

B.I.N. 1072781

TEAM LEADER Andrew P. Thompson 84914
NYSPE LICENSE #

ASSISTANT TEAM LEADER Mike Savino

FEATURE CARRIED I-481 Southbound

FEATURE CROSSED Totman Road

DATE FIELD WORK BEGAN 12/12/13

DATE FIELD WORK COMPLETED 1/16/14

TABLE OF CONTENTS

- STRUCTURE IDENTIFICATION
- INTRODUCTION
- PROJECT LOCATION MAP
- IN DEPTH CONDITION DOCUMENTATION
- PLANS & SKETCHES
- IN-DEPTH PHOTO DOCUMENTATION
- ASBESTOS SAMPLING SURVEY
- LATEST BIENNIAL INSPECTION REPORT

STRUCTURE IDENTIFICATION

a. Bridge Identification Number (BIN): 1072781
b. Reference Marker: 481I 3303 2132
c. Region: NYSDOT Region 3
d. County: Onondaga
e. Town: Cicero
f. Feature Carried: I-481 Southbound
g. Feature Crossed: Totman Rd.

INTRODUCTION

a. Bridge History
   i. Year Built: 1986
   ii. Bridge Type: Single Span Steel, Multi-girder
   iii. Span Length: 110 feet
   iv. Out-to-Out Width: 43.9 feet
   v. Structural Ratings and Rankings
      1. Federal Sufficiency: 95.2 (May 2012)
      2. Condition Rating: 5.317 (May 2012)
      3. General Recommendation: 6
   vi. Live Load Posting (HS25): No
   vii. National Highway System (NHS): Yes
   viii. Previous work Done: Waterproof bridge deck (1999). Repair seats and pedestals (2007). Joints replaced & abutments repaired (2002).
   ix. Planned Future Work: N/A
b. Highway Classification
   i. Functional Classification: Urban Principle Arterial - Interstate
   ii. Traffic Volumes

YEAR	AADT Projected
2014	18379
2034	27310
2054	40581

   iii. Plan for Maintenance and Protection of Traffic:
   iv. Maintenance and Protection of traffic will be achieved by staged construction.

PROJECT LOCATION MAP

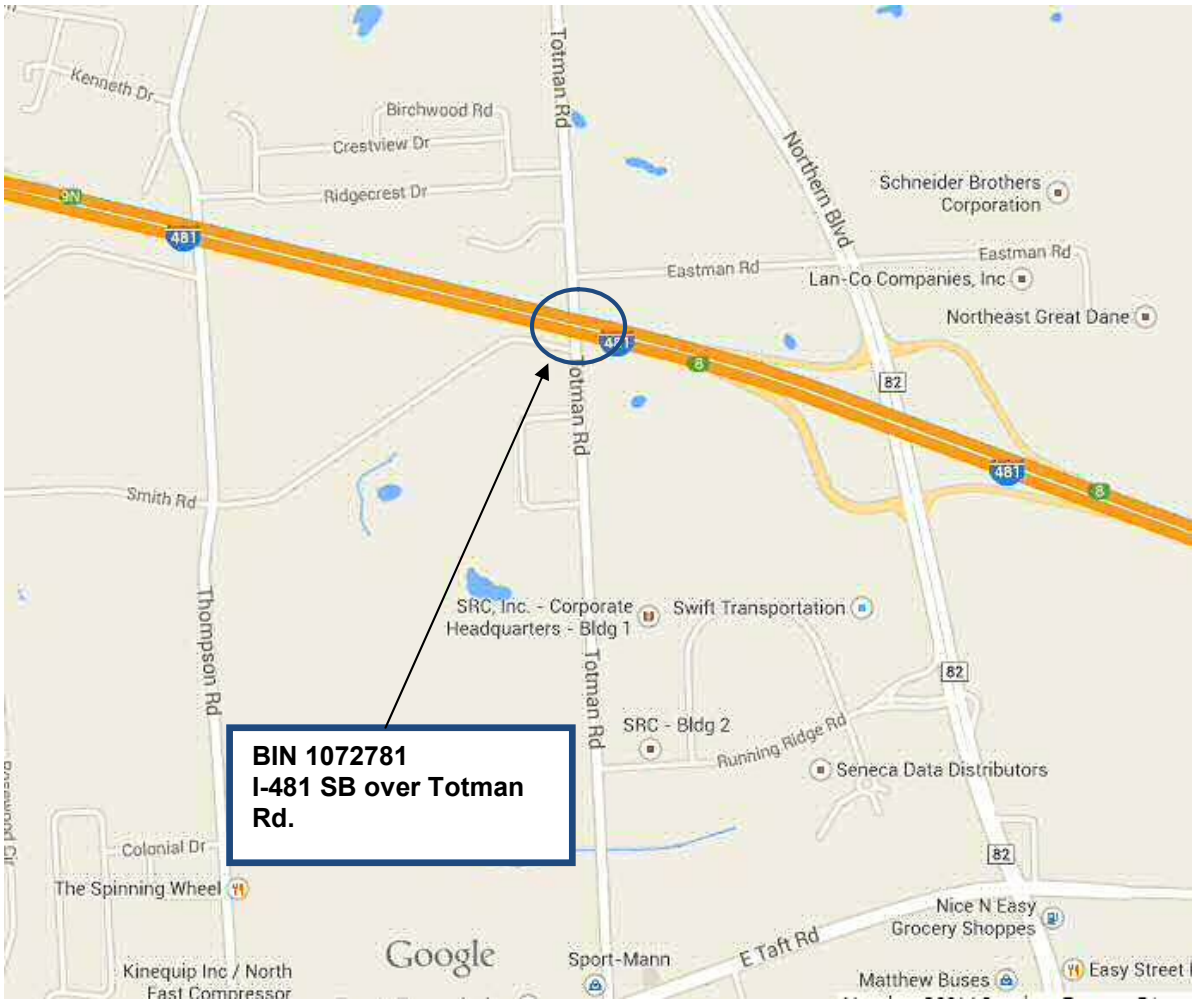

IN-DEPTH CONDITION DOCUMENTATION

NYS DEPT. OF TRANSPORTATION BRIDGE **BIN** 1072781 **SHEET:** 1 **OF** 3 **DATE:** 1/16/2014

FEATURE CARRIED: I-481 SB
FEATURE CROSSED: TOTMAN RD

TEAM LEADER: A.THOMPSON
A. TEAM LEADER: M. SAVINO

ITEM	REMARKS	PHOTO N0.
TP 349-22	Begin Abutment - Joint with Deck: The begin joint seal is losing its bond to the steel at the begin in the left lane for most of its length (Photo 1). No loss of bond was noted in the right lane. However, there is a 13" long section in the right lane located 3' to the right of the centerline of roadway that has come up and is torn (Photo 2). Underneath, moderate rust staining was noted throughout the backwall (Photo 3). No active leakage noted.	1-3
TP 349-23	End Abutment - Joint with Deck: The end joint seal is in fair condition and no loss of bond was noted (Photo 4). The end 14" wide header had hairline cracking at +/-2.5' spacing for its entire length. The headers sound solid. Underneath, moderate rust staining was noted throughout the backwall (Photo 5). No active leakage noted.	4,5
TP 349-26	Begin Abutment - Seats and Pedestals: The seat in Bay 4 at the front right has a 0.5 sf hollow area and a 1/16” wide crack (Photo 6). The seat at the right has a 1/16” crack with no hollowness which extends up the right face of Pedestal 5 (Photo 7). The seat in Bay 3 at the left front has a 2 sf hollow area (Photo 8). The remainder of the seats and pedestals are in good condition.	6-8
TP 349-27	End Abutment - Seats and Pedestals: The right face of Pedestal 1 is 25% hollow and has 2 vertical cracks measuring 1/16” wide (Photo 9). The remainder of the seats and pedestals are in good condition.	9
TP 349-28	Begin Abutment - Backwall: There is a 2.5 sf hollow area behind Girder 5 (Photo 10). The remainder has hairline and map cracking in all bays but is solid sounding (Photo 3).	3,10
TP 349-29	End Abutment - Backwall: The backwall has moderate rust staining and isolated vertical hairline cracking typical throughout (Photo 5).	5
TP 349-30	Begin Abutment - Stem: There is a 1 sf cracked and hollow area at the top to the left of Pedestal 5 (Photo 6). There is a 3 sf hollow area to the right and a 1 sf hollow area to the left of Pedestal 3 (Photo 8). Both areas are along the top and have horizontal cracking. The crack to the left is 1/8” wide. The remainder of the stem face has some hairline cracking and is in good condition (Photo 11).	6,8,11
TP 349-31	End Abutment - Stem: The end stem has a 2 sf hollow area under Bay 1 (Photo 12). The remainder of the stem face is in good condition with scattered hairline cracking (Photo 13).	12,13

ITEM	REMARKS	PHOTO N0.
TP 350-21	Deck Elements – Sidewalks/Fascias: The left fascia has map cracking throughout (Photo 14). The right fascia has hairline vertical cracking at +/-6' spacing throughout (Photo 15). No spalling or hollow sounding areas were found.	14,15
TP 350-22	Deck Elements - Railings/Parapets: The inside faces of the parapets have light map cracking but are solid sounding (Photo 16). The outside faces are also map cracked (Photo 14). The right parapet has staining coming from the timber noise barrier above it (Photo 15). The timber noise barrier is in good condition.	14-16
TP 350-27	Superstructure - Structural Deck: The structural deck is an 8.5" thick concrete mono deck with SIP forms. The deck is in good condition except for (2) adjacent areas in the right shoulder that are hollow sounding (Photo 17). The areas are 2.5 sf and 2 sf and are located near the travel lane just past midspan. Overall, 0.1% of the deck is hollow. No patches were noted. See Deck Deterioration Plan. The underside has SIP forms and is exposed only at the overhangs (Photo 18). Both overhangs have hairline cracking at +/-6' spacing throughout (Photo 19). The SIP form is missing 5' from the end for the full width of Bay 1 for a length of 4' (Photo 20). The deck and surrounding forms in this location are in good condition. The remainder of the forms are in good condition.	17-20
TP 350-30	Superstructure - Paint: The girders are made of weathering steel and form a protective coating. Left fascia Girder 1 is losing its coating in the form of medium sized sheets on the bottom flange and lower outside portion of the web (Photo 21). Right fascia Girder 5 is similar but less severe with smaller flakes. The remainder of the steel on all of the girders has only minor peppering (Photo 18).	18,21

NYS DEPT. OF
TRANSPORTATION BRIDGE

BIN 1072781

SHEET: 3 OF 3
DATE: 1/16/2014

FEATURE CARRIED: I-481 SB
FEATURE CROSSED: TOTMAN RD

TEAM LEADER: A.THOMPSON
A. TEAM LEADER: M. SAVINO

ITEM	REMARKS	PHOTO N0.
	Special Emphasis Inspection Required Non-Redundant/Fracture Critical Members - No Pin and Hangers - No Fatigue-Prone Welds - No Non-Categorized Fatigue-Prone Details - No Other - No	

PLANS & SKETCHES

FED. RD. REG. NO.	STATE	FEDERAL AID PROJECT NO.	SHEET NO.	TOT. SHEETS
	NEW YORK	I-481-2(154) IR-81-2(154)	242	380

INTERSTATE RTE. 690 EXTENSION (I-481)
NORTHERN BLVD. TO BEAR ROAD INTERCHANGE
ONONDAGA COUNTY

CAPITAL PROJECT IDENTIFICATION NO. 3107.00

1072781

481 SB

Peter Reckler 11/16/88

Opalka 12/4/90

P.J.R. 11/9/92

Opalka 11/1/94

Douglas E. Heller 11/5/96

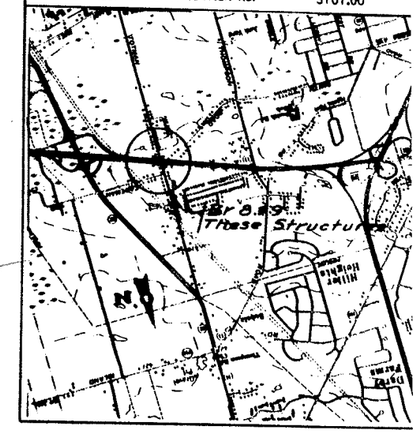

"CICERO QUADRANGLE"

Location Map

Scale: 1"=2000'

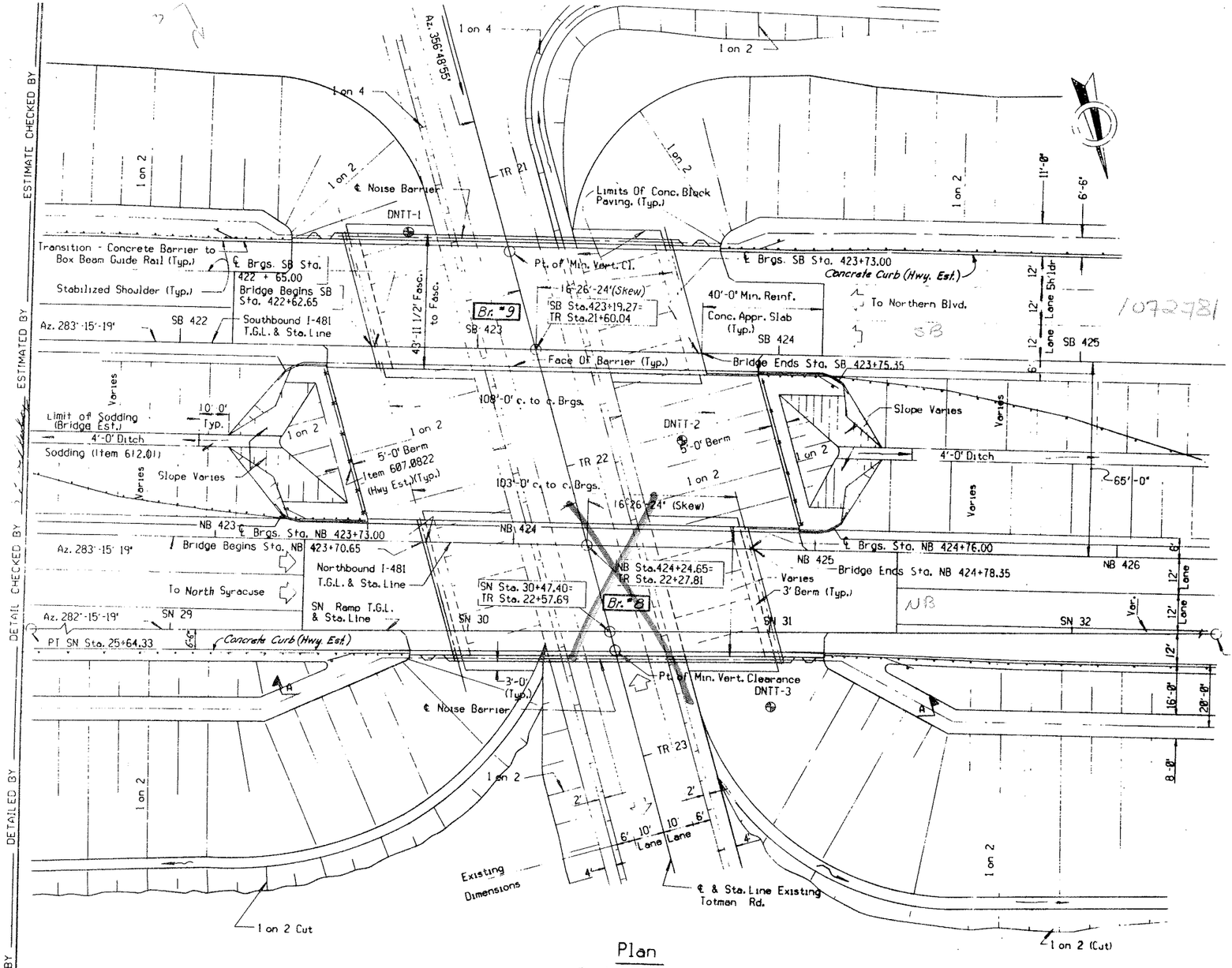

Plan

Scale: 1"=20'-0"

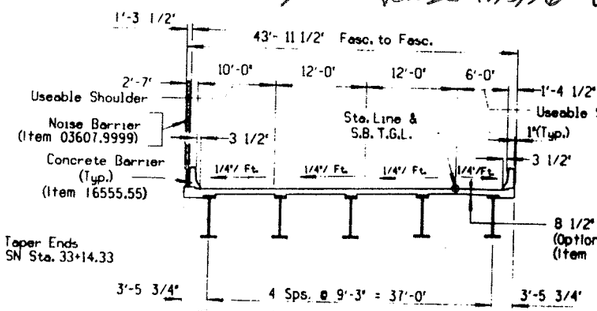

Typical Bridge Section

Southbound I-481 (Bridge #9)

B.I.N. 1072781

Scale: 1"=10'-0"

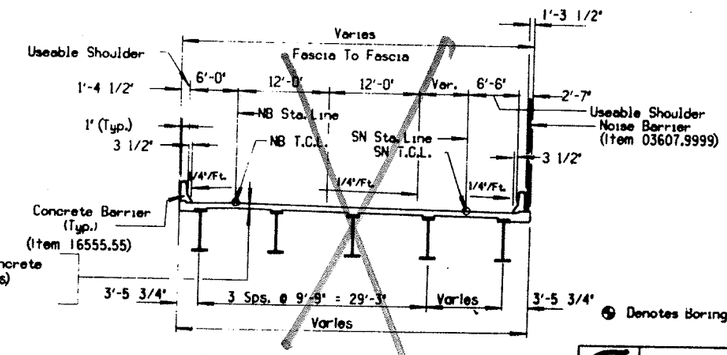

Typical Bridge Section

Northbound I-481 (Bridge #8)

B.I.N. 1072782

Scale: 1"=10'-0"

LOAD RATINGS

	LOADING	INVENTORY	OPERATING
BRIDGE NO. 8	HS	HS 23 (41 T) W.S.	HS 43 (78 T) W.S.
BRIDGE NO. 9	HS	HS 23 (41 T) W.S.	HS 44 (80T) W.S.

Opalka 3/30
Gary W. Lee 3/30
BSO 4/1/04
Gary W. Lee 4/1/04
Opalka 6/29/04
Gary W. Lee 6/29/04
Opalka 5/15/08
PJR 5/11/10
DJ Hann 5/19/10

STATE OF NEW YORK
DEPARTMENT OF TRANSPORTATION

Bridges 8 & 9-N.B. & S.B.
Over Totman Rd.

PROJ. ENG. W.J.WINKLER	DATE Dec./82
SQUAD D.J. ROY	DRAWING NO. 1 OF 36

ESTIMATE CHECKED BY
ESTIMATED BY
DETAIL CHECKED BY
DETAILED BY
DESIGN CHECKED BY
DESIGNED BY

D250416

MUN. NO. RES. NO.	STATE	SECTION AND SUBSECTION NO.	SHEET NO.	TOTAL SHEETS
	NEW YORK	[illegible]	268	380

INTERSTATE RTE. 490 EXTENSION (I-490)
NORTHERN BLVD. TO PEARL ROAD INTERCHANGE
ONONDAGA COUNTY

CAPITAL PROJECT IDENTIFICATION NO. 3107.00

Noise barrier wall shall be installed along the south side of this bridge. For Li... ...ier Wall see Dwg No 7.

Deck Forms Certain Notes:
The Contractor's attention is directed to the provisions of Item 15555.04 which allow the option of three deck forming systems.

TRANSVERSE SECTION (Looking Up - Station)
Scale: = 1/2" = 1'-0"

* Stagger splices so that not more than 50% of the bars are spliced at any location.

Item 16555.55

See Detail "B"

3-5SE bars Spaced as Shown

5SE2 Spaced as Shown

RIGHT FASCIA

5SE10 @ 5 3/4

5SE11 5 3/4

Joint at Slab Concrete (Optional Forming Systems Item 15555.04)

Stud Shear Connectors for Bridges - Item 556.03

5SE4 @ 5 3/4

5S3 @ 5 3/4

3-5S1 Spaced as Shown

L 4 x 4 x 3/8

Δ 3 x 3 x 3/8

7'-3" c.to c. Brg

3/16 R (Typ)

3/16 Min Radius (Typ)

Sloped

WT 15 x 49.5

3/16 Brg Shift R.

1" Nominal Clearance (Typ)

D2 D3 D1

3'-5 3/4"

4 Spaces @ 9'-3" = 37'-0"

Pay Limit for Item 15555.04

1" cov

4 1/2 cov

3/4" Min

1'-7" Lap

1/2 clr

5S.B. Sta. Line

5SE5 @ 5 3/8

5SE8 @ 11 1/2

S.B. T.G.L.

6SE9 @ 11 1/2

1/4" Fit

6'-0" Useable Shoulder

5'-8 1/2"

1'-4 1/2"

1'-7"

1"

2 1/2"

3 1/2"

Item 16555.55

See Detail "A"

6-5SE bars Spaced as Shown

3-5SE2 Spaced as Shown

LEFT FASCIA

3-5S1 Spaced as Shown

1'-0" 1'-3 1/2" 7 Spaces @ 8" = 4'-8" 1'-3 1/2" 1'-0"

Typical Spacing Pattern each Bay

Note: Diaphragm not shown

Right Fascia 3'-7 5/8"

This side LEFT

If this is wider, is it out-out or out-in?

DETAIL "A"
Scale: 1" = 1'-0"

Useable Shoulder

1'-7"

3 1/2" 5 3/8" 9 1/8"

7" 2" 1" 1"

1/2 Wash

2'-10"

1'-9"

1'-1"

1'-0"

6"

3 1/2"

6-5E bars

2" Cov.

5SE8 @ 11 1/2"

1"

4 1/2"

1'-0"

2'-6 1/2"

1'-2"

2" Cov.

5SE5 @ 5 3/8"

6SE9 @ 11 1/2"

5S3 @ 5 3/8"

3-5S1 Spaced as Shown

3-5SE2 Spaced as Shown

End of Slab

7 7/8"

109'-11 7/8"

108'-0"

220 - 5SE10 @ (Lap to 5S3) (into Barrier)

1-5SE2 (Bottom)

220 - 5SE11 (Lap to 5S3) (into Barrier)

216 - 5SE5 @ 5 3/8" (Top)

1'-3 1/2"

1'-0"

10 5/16"

2-5S6 (Between Girders)

9-5S7 @ 10 1/2" (Haunch Girder) (Top)

Skew A 16°-26'-24"

S.B. Sta. 422+65.00

S.B. Sta. Line of T.G.L.

43'-11 1/2"

36'-7"

7'-4 1/2"

34-5SE2 Spaced as Shown (Top)

46-5S1 Spaced as Shown (Bottom)

216 - 5SE4 @ 5 3/8" (Top)

220 - 5S3 @ 5 3/8" (Bottom)

3-5S7 @ 10 1/2" (Haunch Girder) (Top)

2-5S6 (Between Girders)

S.B. Sta. 423+73.00

1'-7 Min Lap

111 - 6SE9 @ 11 1/2" (into Barrier) (Lap to 5S3)

5 Brgs.

"5E bars Spaced as Shown in Details "A" and "B"

111 - 5SE8 @ 11 1/2" (into Barrier)

ITEM 16555.55 - PERMANENT CONCRETE TRAFFIC BARRIER FOR STRUCTURES (SAFETY SHAPE - HALF SECTION) (SOUTH BARRIER SIMILAR)

SLAB REINFORCEMENT PLAN
Scale: 1/2" = 1'-0"

DETAIL "B"
Scale 1" = 1'-0"

6-5SE2 Spaced as Shown

Notes,
For Safety Handrail Details see Dwg No. 5 of Common Structure Details
For End of Slab Haunch Detail, Traffic Barrier Chamfer Detail and Concrete Table see Dwg. No. 28.
For Location of Diaphragms see Dwg No. 28.
For Girder Details see Dwg. No. 27.
For Diaphragm Notes see Dwg. No. 33.

STATE OF NEW YORK
DEPARTMENT OF TRANSPORTATION
STRUCTURES DESIGN AND CONSTRUCTION DIVISION

BRIDGE NO. 3 OVER TOTMAN RD.

TRANSVERSE SECTION AND SLAB BAR LAYOUT

DRG. [illegible] SQUAD T. ROAD DRAWING NO. 27 OF 35

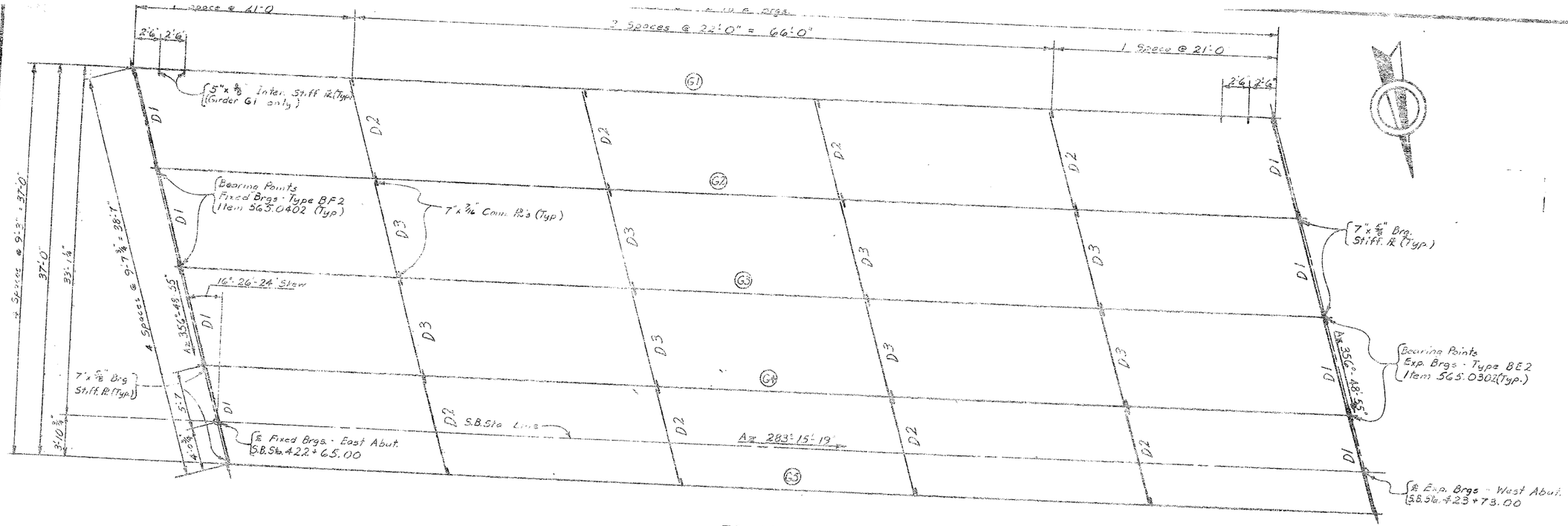

FRAMING PLAN
Scale: 3/16" 1'-0"

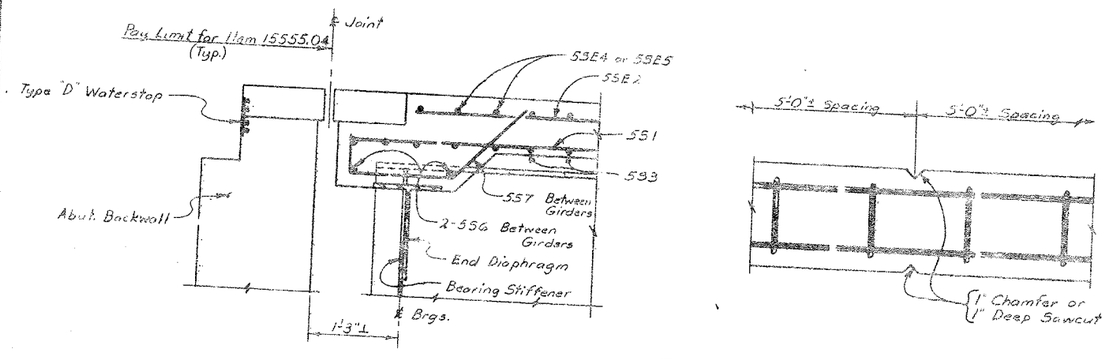

END OF SLAB HAUNCH DETAIL
Scale: 1"=1'-0"

TRAFFIC BARRIER CHAMFER DETAIL
Not to Scale

CONCRETE TABLE		
LOCATION	Struct. Slab Conc. Item 15555.04	Traffic Barrier Item 15555.55
Struct. Slab	4848 S.F.	———
No. Traffic Barrier	———	111 L.F.
So. Traffic Barrier	———	111 L.F.

NOTES FOR DIAPHRAGM DETAILS

1. Where holes are indicated, connections shall be 7/8" diameter high-strength bolts.
2. Cross frames may be fabricated to fit the girders in their erected position and cambered shape, but deflected vertically under the de load of the steel work only.
3. The Contractor may place diaphragms on either side of the bearing stiffeners or stiffener connection plates as necessary to correct alignment provided there will be no inteference with other structural details
4. Snipe the outstanding leg of all angles and plates 1" minimum.
5. Tapered or flat shim plates may be used in the connection between skewed diaphragms and the bearing stiffeners or stiffener connectio plates. Variable thicknesses of shim plates may be used. The mini mum thickness of shim plate shall be 1/8" with a maximum number of shim plates permitted at any connection. The total thickness of al shim plates used at any connection shall not exceed 1". Shim plate shall have the dimensions of the faying surface. The shim material shall conform to ASTM Designation A36, except that on unpainted structures, the shim material shall conform to ASTM Designation A58 No additional payment will be made for furnishing and placing the shim plates.

Notes,
For Girder Details see Dwg. No. 29
For details of diaphragms D1, D2 and D Transverse Section on Dwg. No. 27.
For Bearing Details see Dwg. No. 3 Common Structure Details.

STRUCTURAL SLAB REINFORCEMENT

MARK	SIZE	No.	TYPE	LENGTH	A	B	C	D	E	F	G	H	J	K	L	R	S
551	5	92	Str.	55-8													
5SE2	5	72	Str.	52-7													
553	5	220	Str.	45-6													
5SE4	5	216	1	38-7	0-7	38-0											
5SE5	5	216	1	9-8	0-7	9-1											
556	5	16	Str.	7-11							0		0-5				
557	5	73	15	2-9							0		0-5				
5SE8	5	111	2	6-0				1-2				0-4	0-10		0-10		1-2
5SE9	6	111	15	4-9		2-2	0-9	3-1	0	0-3	0		0	2-2		0-3	
5SE10	5	220	14	8-9	3-4	0-9	3-4	1-3	0-8	0-5		0	1-4		3-2		3-6
5SE11	5	220	15	4-6				1-0				0	1-4		3-2		3-6

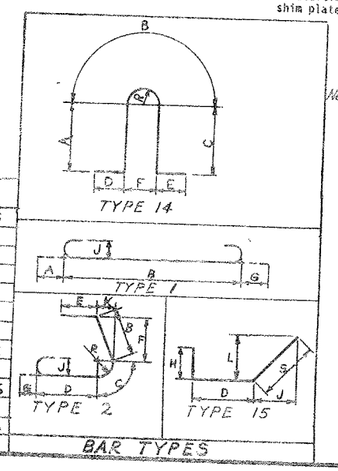

BAR TYPES

STATE OF NEW YORK
DEPARTMENT OF TRANSPORTATION
DIVISION OF CONSTRUCTION

BRIDGE NO. 9 OVER TOTMAN RD

FRAMING PLAN AND SLAB DETA

DRAWING NO. 28 OF

FED ROAD REG. NO.	STATE	CONTRACT NO.	SHEET NO.	TOTAL SHEETS
1	N.Y.	D259214	362	432

BRIDGE REHABILITATION PROJECT (ELEMENT SPECIFIC)
VARIOUS BRIDGES ON INTERSTATE 481
TOWNS OF DEWITT AND CICERO
ONONDAGA COUNTY
P.I.N. 305613 | B.I.N. ALL BINS

BRIDGE JOINT TABLE

B.I.N. NUMBER	JOINT LOCATION	JOINT SKEW	SPAN(S) LENGTH FOR JOINT (METERS)	JOINT BEND LOCAT'N RT	JOINT BEND LOCAT'N LT	EXISTING JOINT TYPE	PROPOSED JOINT TYPE	CURB TO CURB DISTANCE (METERS) (SEE NOTES)	FASCIA & MEDIAN LENGTH (METERS) LT/RT	TOTAL LENGTH (METERS)	JOINT ITEM NUMBER(S)	DRAWING NUMBER SECT VIEW	DRAWING NUMBER PLAN VIEW	DRAWING NUMBER FASCIA DETAIL
1072530	EAST ABUT.	0°-00'-00"	33.528	N	N	ACJ	MAC-5	15.850	.457/.457	16.764	567.35M	JD-30	JD-29	JD-30
	WEST ABUT.	0°-00'-00"	37.795	N	N	ACJ	MAC-5	15.850	.457/.457	16.764	567.35M	JD-30	JD-29	JD-30
1072571	SOUTH ABUT.	20°-29'-45.2"	44.196	N	N	ACJ	MAC-6	14.481	.488/.488	15.457	567.36M	JD-32	JD-31	JD-32
	NORTH ABUT.	20°-29'-45.2"	———	N	N	ACJ	MAC-1	15.456	.488/.488	16.428	567.31M	JD-32	JD-31	JD-32
1072572	SOUTH ABUT.	21°-09'-2.1"	44.196	N	N	ACJ	MAC-6	12.746	.490/.490	13.726	567.36M	JD-34	JD-33	JD-34
	NORTH ABUT.	21°-09'-2.1"	———	N	N	ACJ	MAC-1	12.746	.490/.490	13.726	567.31M	JD-34	JD-33	JD-34
1072581	SOUTH ABUT.	3°59'-27.5"	37.033	N	N	ACJ	MAC-5	11.917	.458/.458	12.833	567.35M	JD-36	JD-35	JD-36
	NORTH ABUT.	3°-59'-27.5"	———	N	N	ACJ	MAC-1	11.917	.458/.458	12.833	567.31M	JD-36	JD-35	JD-36
1072582	SOUTH ABUT.	3°-51'-57.9"	37.033	N	N	ACJ	MAC-5	11.915	.458/.458	12.831	567.35M	JD-38	JD-37	JD-38
	NORTH ABUT.	3°-51'-57.9"	———	N	N	ACJ	MAC-1	11.915	.458/.458	12.831	567.31M	JD-38	JD-37	JD-38
1072781	EAST ABUT.	16°-26'-24"	———	N	N	ACJ	MAC-1	12.500	.530/.530	13.560	567.31M	JD-40	JD-39	JD-40
	WEST ABUT.	16°-26'-24"	33.635	N	N	ACJ	MAC-5	12.500	.530/.530	13.560	567.35M	JD-40	JD-39	JD-40
1072782	EAST ABUT.	16°-26'-24"	———	N	N	ACJ	MAC-1	13.183	.530/.530	14.243	567.31M	JD-42	JD-41	JD-42
	WEST ABUT.	16°-26'-24"	31.394	N	N	ACJ	MAC-5	12.589	.530/.530	13.649	567.35M	JD-42	JD-41	JD-42
1072791	EAST ABUT.	17°-02'-59.4"	30.785	N	N	ACJ	RCS	12.566	.531/.531	13.628	16567.64M	JD-47	JD-43	JD-47
	WEST ABUT.	17°-02'-59.4"	———	N	N	ACJ	RCS	12.566	.531/.531	13.628	16567.64M	JD-47	JD-43	JD-47
1072792	EAST ABUT.	17°-02'-59.4"	30.785	N	N	ACJ	MAC-5	12.566	.530/.530	14.015	567.35M	JD-44	JD-43	JD-44
	WEST ABUT.	17°-02'-59.4"	———	N	N	ACJ	MAC-1	12.566	.530/.530	14.015	567.31M	JD-44	JD-43	JD-44
1093510	WEST ABUT.	44°-07'-00"	———	N	N	ACJ/ADA	RCS	16.560	.637/.637	17.834	16567.64M	JD-46	JD-45	JD-46
	EAST ABUT.	40°-26'-00"	37.522	N	N	ADA	RADA	15.620	———	15.620	———	JD-46	JD-45	———

LEGEND

EXISTING JOINT TYPE:

ACJ = ARMORED COMPRESSION JOINT SYSTEM
MOD = MODULAR JOINT SYSTEM
MAC = MODIFIED ARMORED COMPRESSION SYSTEM (NO HORIZ. ARMORING ANGLE)
ADA = ARMORED DECK ANGLE
SS = STRIP SEAL JOINT
OPEN = OPEN JOINT

PROPOSED JOINT TYPE:

MAC-1 = MOD. ARM./COMP. SEAL JT. SYS. (A-1)
MAC-2 = MOD. ARM./COMP. SEAL JT. SYS. (A-2)
MAC-5 = MOD. ARM./COMP. SEAL JT. SYS. (A-5)
MAC-6 = MOD. ARM./COMP. SEAL JT. SYS. (A-6)
RCS = REPLACE EXISTING COMPRESSION SEAL
RADA = REMOVE ARMOR DECK ANGLE
MOD-1 = MODULAR JT. SYS. (ONE-CELL)
MOD-2 = MODULAR JT. SYS. (TWO-CELL)

JOINT BEND LOCATION:

N = NO BENDS
CRB = CURB LINE
PAV'T = PAVEMENT

GENERAL NOTES:

- ALL MEASUREMENTS SHALL BE FIELD VERIFIED.
- CURB TO CURB LENGTHS ARE MEASURED ALONG ℄ OF JOINT.
- MULTIPLE DIMENSIONS ARE SHOWN LOOKING UP-STATION, LEFT TO RIGHT.
- ALL DIMENSIONS ARE SHOWN IN METERS.

INFORMATIONAL NOTES:

BIN 1072530 - NO JOINT AT PIER.

BIN 1072791 - REPLACE COMPRESSION SEALS
BEG. ABUT. (EAST), TYPE A-5
END ABUT. (WEST), TYPE A-1

FOR JOINT DETAILS REFER TO THE FOLLOWING DRAWINGS:

DWG. NO. JD-1 - MODIFIED ARMORED COMPRESSION SEAL JOINT SYSTEM.
DWG. NO. JD-24 - ONE-CELL MODULAR JOINT SYSTEM.
DWG. NO. JD-25 - TWO-CELL MODULAR JOINT SYSTEM.

LIST OF BRIDGE JOINT ITEMS USED:

ITEM 566.01M - MODULAR EXP. JOINT SYSTEM ONE-CELL (M)
ITEM 566.02M - MODULAR EXP. JOINT SYSTEM TWO-CELL (M)
ITEM 567.31M - MODIFIED ARMORED JOINT SYSTEM W/ COMP. SEAL TYPE A1 (m)
ITEM 567.32M - MODIFIED ARMORED JOINT SYSTEM W/ COMP. SEAL TYPE A2 (m)
ITEM 567.35M - MODIFIED ARMORED JOINT SYSTEM W/ COMP. SEAL TYPE A5 (m)
ITEM 567.36M - MODIFIED ARMORED JOINT SYSTEM W/ COMP. SEAL TYPE A6 (m)
ITEM 16567.640001M - REPLACE COMPRESSION SEAL FOR EXISTING BRDGE JOINTS (m)

ALL DIMENSIONS ARE IN m UNLESS OTHERWISE NOTED

AS BUILT REVISIONS

SIGNATURE DATE

INTERSTATE 481 VARIOUS BRIDGES

BRIDGE JOINT TABLE

STATE OF NEW YORK
DEPARTMENT OF TRANSPORTATION

FILENAME	REGION	DATE	DRAWING NO.
305613AJJA1	3	10/02	JT-2

CHECKED BY
DRAFTED BY
ESTIMATED BY
DESIGNED BY
JOB MANAGER
DESIGN SUPERVISOR

FED ROAD REG. NO.	STATE	CONTRACT NO.	SHEET NO.	TOTAL SHEETS
1	N.Y.	D259214	365	432

BRIDGE REHABILITATION PROJECT (ELEMENT SPECIFIC)

VARIOUS BRIDGES ON INTERSTATE 481

TOWNS OF DEWITT AND CICERO

ONONDAGA COUNTY

P.I.N. 305613 | B.I.N. ALL BIN'S

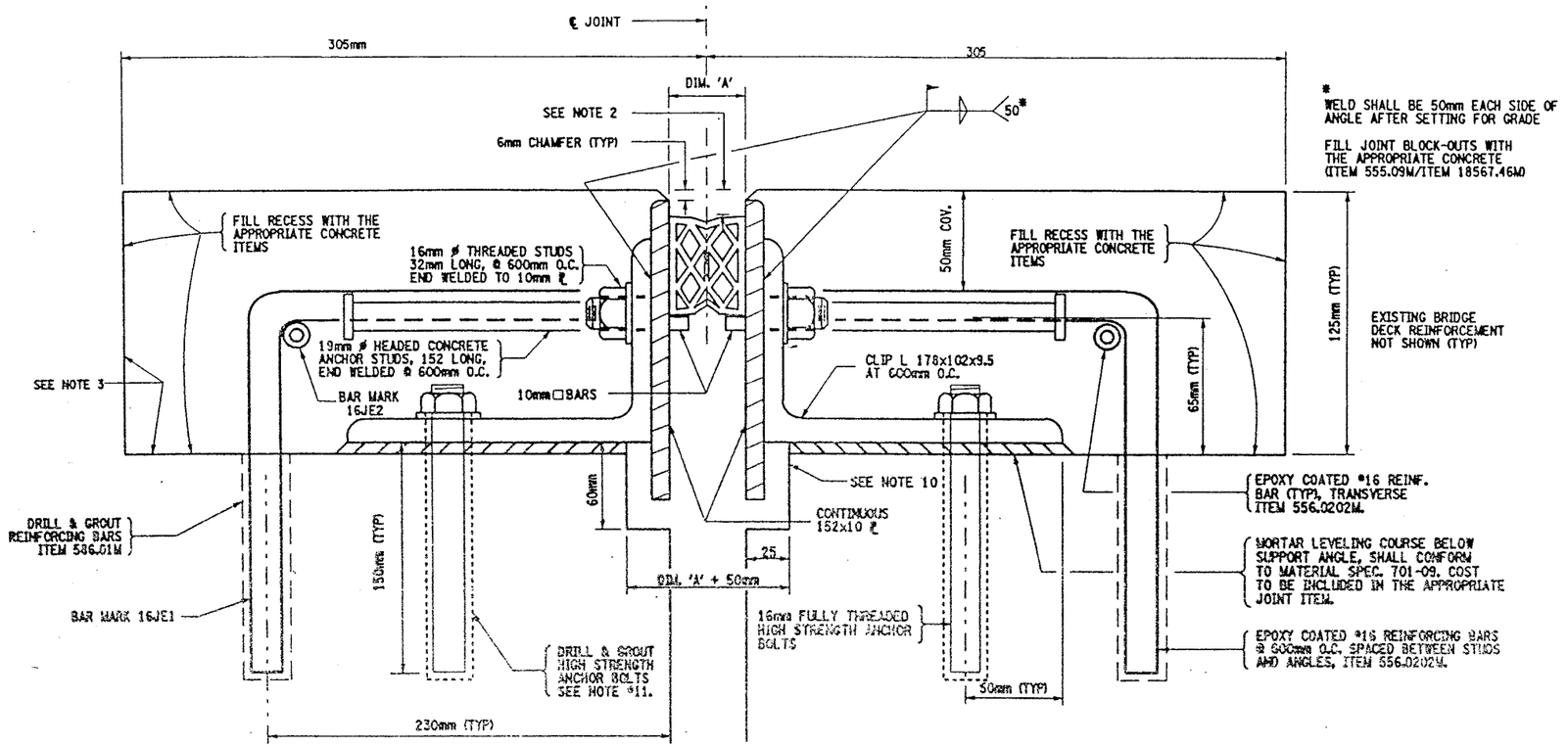

* WELD SHALL BE 50mm EACH SIDE OF ANGLE AFTER SETTING FOR GRADE

FILL JOINT BLOCK-OUTS WITH THE APPROPRIATE CONCRETE (ITEM 555.09M/ITEM 18567.46M)

MODIFIED ARMORED COMPRESSION JOINT DETAIL

FOR INSTALLATION LOCATIONS SEE JOINT TABLE

NOT TO SCALE

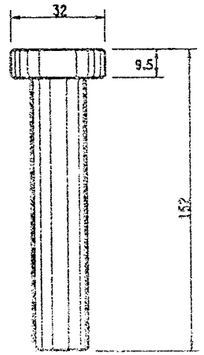

DETAIL OF HEADED CONCRETE ANCHOR STUD

NOT TO SCALE

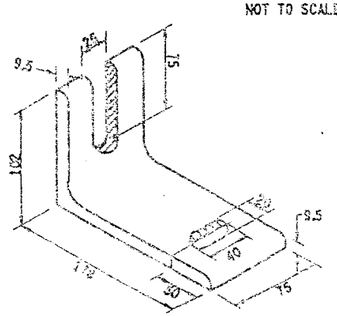

DETAIL OF CLIP ANGLE

NOT TO SCALE

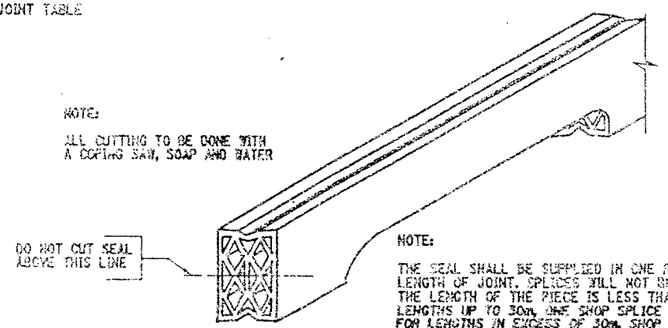

DETAIL FOR CUTTING SEAL

NOT TO SCALE

GENERAL NOTES:

1. THE TEMPERATURE OF THE BRIDGE MUST BE TAKEN ON THE STRUCTURAL STEEL SURFACE TO DETERMINE THE TEMPERATURE CORRECTION FOR THE JOINT OPENINGS.
2. THIS DEPTH SHALL BE INDICATED ON THE SHOP DRAWINGS AND SHALL BE SUCH THAT WHEN THE SEAL IS COMPRESSED TO 50% OF ITS NORMAL WIDTH, THE TOP OF THE SEAL SHALL BE NOT LESS THAN 6mm NOR MORE THAN 19mm BELOW THE TOP OF THE ROADWAY.
3. RECESSES RECEIVING ITEM 555.09M, AFTER SURFACE PREPARATION, THOROUGHLY WET THE CONCRETE SURFACE AND ALL POROUS SURFACES TO BE IN CONTACT WITH NEW CONCRETE, FOR 12 HOURS. NOTE THE USE OF MATERIAL SPECIF. 705-22 PORTLAND CEMENT MORTAR BONDING GROUT HAS BEEN ELIMINATED, SEE INSERT IN PROJECT PROPOSAL.
4. A WATER-TIGHT INTEGRITY TEST SHALL BE PERFORMED BY THE CONTRACTOR AT ALL COMPRESSION SEAL JOINT INSTALLATIONS. THE FOLLOWING TEST PARAMETERS SHALL BE INCORPORATED IN THE TEST:
   1. A 15 MINUTE MINIMUM PERIOD OF STANDING WATER, WITH A 25mm MINIMUM DEPTH SHALL BE USED.
   2. IN ADDITION, IN LOCATIONS OF COPED AREAS OF THE SEAL, BENDS, ETC., WATER PRESSURE SHALL BE APPLIED, TO THE SATISFACTION OF THE E.I.C FOR A 15 MINUTE PERIOD.
   3. LIMITS OF TEST AREA SHALL BE FROM FACE OF CURB TO FACE OF CURB ON THE DECK SURFACE.
5. NO PAYMENT WILL BE MADE TO THE CONTRACTOR FOR THE JOINT IF, IN THE OPINION OF THE ENGINEER, THE INSTALLED JOINT LEAKS WITHIN THE 15 MINUTE TEST PERIOD.
6. PRIOR TO THE START OF WORK AT EACH JOINT, THE CONTRACTOR SHALL SUBMIT A WRITTEN PLAN FOR THE SPECIFICS OF THE TESTING, INCLUDING CONTAINMENT OF THE WATER AND THE METHOD TO BE USED FOR ACCESS BY THE E.I.C. TO THE BOTTOM OF THE JOINT BEING TESTED.
7. THE COST OF ALL LABOR, EQUIPMENT AND MATERIALS REQUIRED FOR THE TESTING WHICH INCLUDES, BUT IS NOT LIMITED TO:
   1. A CONTAINMENT SYSTEM FOR THE TEST WATER.
   2. PROVISIONS FOR E.I.C. ACCESS TO THE BOTTOM OF THE JOINT.

   SHALL BE INCLUDED IN THE PRICE BID FOR THE RESPECTIVE JOINT ITEMS.
8. THE COST OF ALL LABOR, EQUIPMENT, AND MATERIALS TO INSTALL THE NEW JOINT SHALL BE INCLUDED IN THE UNIT PRICE BID FOR THE APPROPRIATE JOINT ITEM.
9. MORTAR LEVELING COURSE SHALL CONFORM TO MATERIAL SPECIFICATION 701-09 AND SHALL BE INCLUDED IN THE PRICE BID FOR THE APPROPRIATE JOINT ITEM.
10. THE DIMENSIONS OF THE REMOVAL AREA UNDER THE 152x10 PLATES ARE SHOWN TO ALLOW SPACE FOR THE PLATES TO REST FREELY. IF THERE IS ALREADY ADEQUATE SPACE, NO CONCRETE REMOVAL OR REPLACEMENT IS REQUIRED IN THIS AREA.
11. 16 mm ⌀ ASTM A325M ANCHOR BOLT TO BE DRILLED AND GROUTED IN PLACE IN ACCORDANCE WITH THE REQUIREMENTS OF SUB-SECTION 586-3.02. GROUTING MATERIALS SHALL BE IN ACCORDANCE WITH MATERIALS SUB-SECTION 701-07 ANCHORING MATERIALS-CHEMICALLY CURING. HOLES TO BE DRILLED TO THE DIAMETER AND DEPTH RECOMMENDED BY THE MANUFACTURER OF THE GROUTING MATERIAL (MIN. DEPTH OF 150 mm). THE COST OF THE ANCHORS, INCLUDING DRILLING AND GROUTING, SHALL BE INCLUDED IN THE UNIT PRICE BID FOR THE APPROPRIATE JOINT SYSTEM ITEM.
12. IT IS DESIRABLE TO HAVE THE ARMORED JOINT WITH ITS COMPRESSION SEAL ASSEMBLED IN THE SHOP AND DELIVERED TO THE JOB SITE ALL SET FOR INSTALLATION IN ITS PREFORMED RECESS IN THE STRUCTURAL SLAB, IN CASES WHERE THE ARMORED JOINT CANNOT BE ASSEMBLED IN THE SHOP, DUE TO ITS EXCESSIVE LENGTH CAUSING SHIPPING PROBLEMS, THE JOINT SHALL BE SEALED WITH THE COMPRESSION SEAL BEFORE THE STRUCTURE IS OPENED TO TRAFFIC (INCLUDING CONSTRUCTION TRAFFIC), AND BEFORE DIS CONTINUING OPERATIONS WHEN WORK IS SUSPENDED DURING THE WINTER.

EPOXY POLYSULFIDE GROUT NOTE:

CONTRACTOR MAY WITH THE APPROVAL OF THE ENGINEER USE MATERIAL SPECIFICATION 721-03 EPOXY POLYSULFIDE GROUT, AT THE RECESSES. INSTEAD OF THE 12 HOUR CONTINUOUS PREWETTING REQUIREMENTS (PROJECT PROPOSAL). CONTRACTOR MUST ENSURE PROPER CONSTRUCTION PRACTICES ARE FOLLOWED WHEN USING THIS GROUT. THE USE OF EPOXY POLYSULFIDE GROUT SHALL BE AT NO ADDITIONAL COST TO THE STATE.

SEALS (mm)			ARMORED JOINT SYSTEM	
TYPE	NOMINAL WIDTH	DIM. "A" @ 20°C.	TYPE	END CONDITION
1	44	25	A1	Fixed End Only
2	51	30	A2	Exp. up to 18 m
3	64	38	A3	Exp. over 18 m to 23 m
4	76	44	A4	Exp. over 23 m to 27 m
5	89	52	A5	Exp. over 27 m to 38 m
6	102	60	A6	Exp. over 38 m to 46 m

Maximum Skew Limits: Fixed End - No Limit
Exp. End - 45° A2 thru A6

LIST OF ITEMS USED:

ITEM 555.09M - STRUCT. CONCRETE, CLASS "HP" (CM)
ITEM 556.0202M - EPOXY COATED BAR REINF. FOR STRUCT. (KG)
ITEM 567.31M - MOD. ARMORED JOINT SYSTEM W/ COMP. SEAL TYPE A1 (m)
ITEM 567.32M - MOD. ARMORED JOINT SYSTEM W/ COMP. SEAL TYPE A2 (m)
ITEM 567.35M - MOD. ARMORED JOINT SYSTEM W/ COMP. SEAL TYPE A5 (m)
ITEM 567.36M - MOD. ARMORED JOINT SYSTEM W/ COMP. SEAL TYPE A6 (m)
ITEM 18567.46M - ELASTOMERIC CONC. FOR BRIDGE JT. SYSTEMS (M)
ITEM 586.01M - DRILL & GROUT REINF. BARS (mm)

ALL DIMENSIONS ARE IN mm UNLESS OTHERWISE NOTED

AS BUILT REVISIONS

SIGNATURE DATE

INTERSTATE 481

COMPRESSION SEAL JOINT DETAILS

STATE OF NEW YORK
DEPARTMENT OF TRANSPORTATION

FILENAME	REGION	DATE	DRAWING NO.
305613AJJA1	3	10/02	JD-1

DESIGN SUPERVISOR ____ JOB MANAGER ____ DESIGNED BY ____ DRAFTED BY ____ ESTIMATED BY ____ CHECKED BY ____ CHECKED BY ____

FED ROAD REG. NO.	STATE	CONTRACT NO.	SHEET NO.	TOTAL SHEETS
1	N.Y.	D259214	403	432

BRIDGE REHABILITATION PROJECT (ELEMENT SPECIFIC)
VARIOUS BRIDGES ON INTERSTATE 481
TOWNS OF DEWITT AND CICERO
ONONDAGA COUNTY
P.I.N. 305613 B.I.N. 1072781

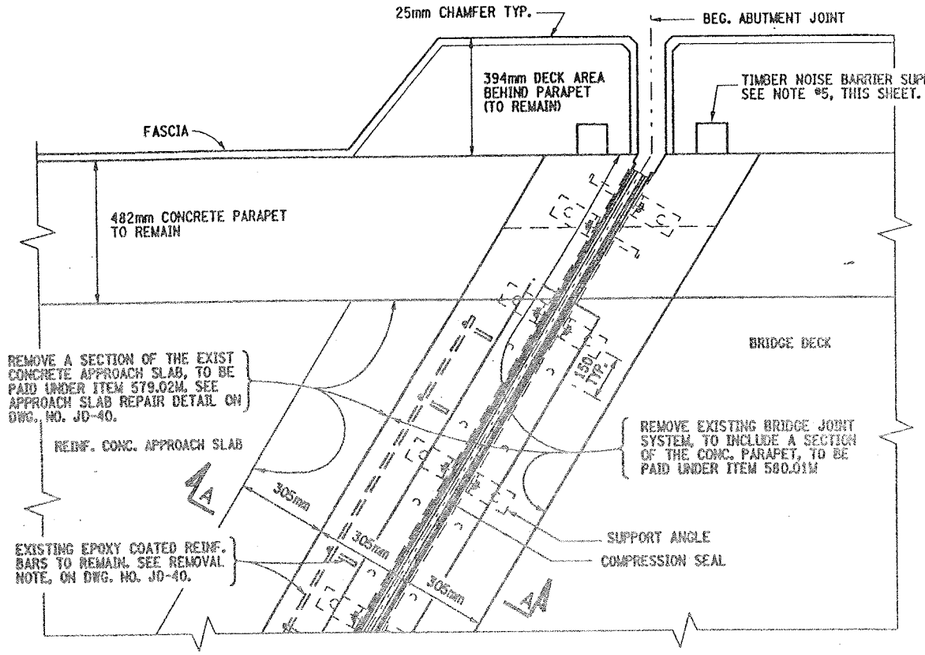

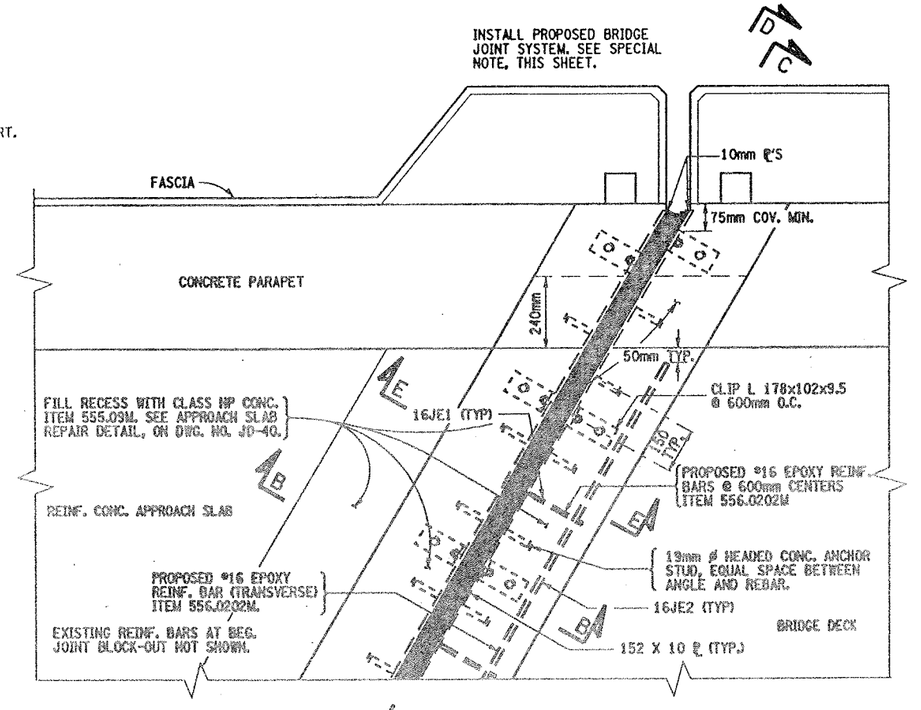

NOTES:

1. REFER TO DWG. NO. JD-1 FOR PROPOSED JOINT DETAILS AND ALL NOTES SHALL APPLY.
2. FOR SECTION VIEWS SEE DWG. NO. JD-40.
3. REFER TO DWG. NO. JT-2 FOR PROPOSED BRIDGE JOINT INSTALLATION LOCATIONS.
4. THE STRUCTURE HAS A 16°-26'-24" SKEW ANGLE.
5. THE SOUTH FASCIA (LEFT SIDE) PARAPET HAS A TIMBER NOISE BARRIER ATTACHED TO THE BACK SIDE OF THE PARAPET. THIS TIMBER NOISE BARRIER TO REMAIN, IT MAY BE NECESSARY TO TEMPERARILY REMOVE THE SUPPORT BRACKETS TO FACILITATE INSTALLATION OF THE PROPOSED BRIDGE JOINT.

   ANY ADDITIONAL SUPPORT TO THE TIMBER NOISE BARRIER DEEMED NECESSARY BY THE ENGINEER, DURING THIS REMOVAL OF THE SUPPORT BRACKETS SHALL BE INCLUDED IN THE PRICE BID FOR ITEM 580.01M.

SPECIAL NOTE:

BIN 1072781 - INSTALL ITEM 567.31M AT BEG. ABUT. JOINT
INSTALL ITEM 567.35M AT END ABUT. JOINT.

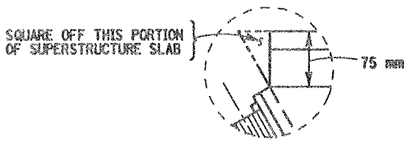

DETAIL "S"
NOT TO SCALE

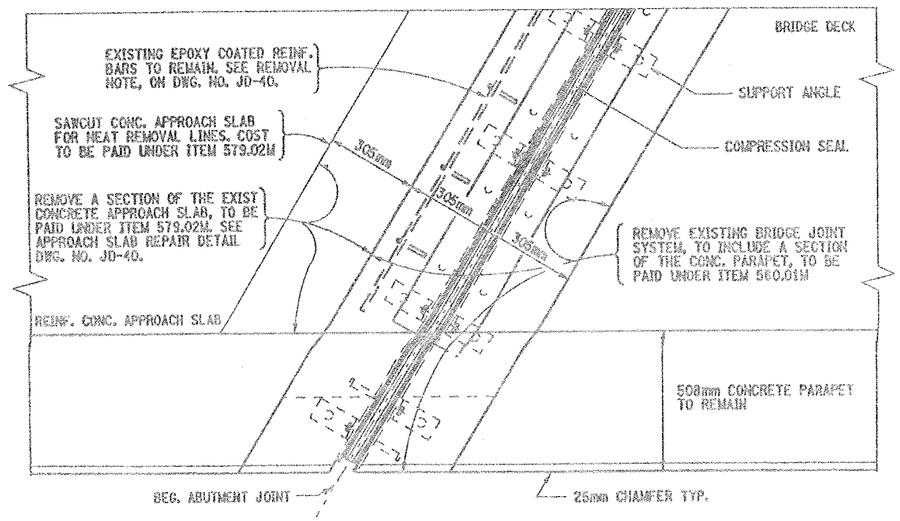

EXISTING ABUTMENT JOINT PLAN VIEW

BIN 1072781 - BEG. ABUT. SHOWN
END ABUT. SIMILAR

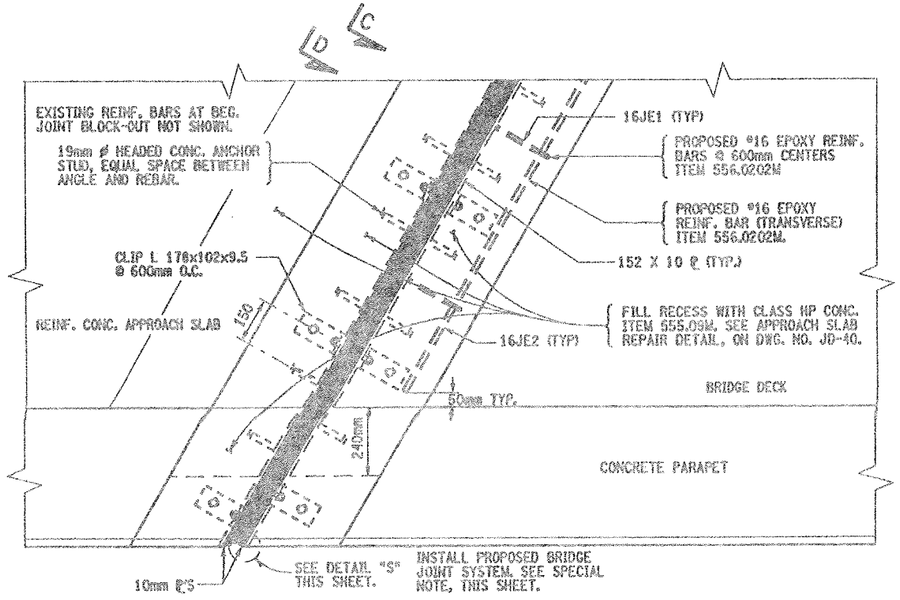

PROPOSED ABUTMENT JOINT PLAN VIEW

BIN 1072781 - BEG. ABUT. SHOWN
END ABUT. SIMILAR

ITEMS USED:

ITEM 555.09M	- STRUCT. CONCRETE, CLASS "HP" (CM)
ITEM 556.0202M	- EPOXY-COATED BAR REINF. FOR STRUCT. (Kg)
ITEM 567.31M	- MOD. ARM. JOINT SYSTEM W/COMP. SEAL TYPE A-1 (M)
ITEM 567.35M	- MOD. ARM. JOINT SYSTEM W/COMP. SEAL TYPE A-5 (M)
ITEM 579.02M	- REINFORCED BAR EXPOSURE (SM)
ITEM 580.01M	- REMOVAL OF STRUCT. CONCRETE (CM)

ALL DIMENSIONS ARE IN mm UNLESS OTHERWISE NOTED

AS BUILT REVISIONS

SIGNATURE DATE

INTERSTATE 481 SB
OVER
TOTMAN ROAD

BRIDGE JOINT DETAILS

STATE OF NEW YORK
DEPARTMENT OF TRANSPORTATION

FILENAME	REGION	DATE	DRAWING NO.
305613AJJA1	3	10/02	JD-39

DESIGN SUPERVISOR ____ JOB MANAGER ____ DESIGNED BY ____ DRAFTED BY ____ ESTIMATED BY ____ CHECKED BY ____

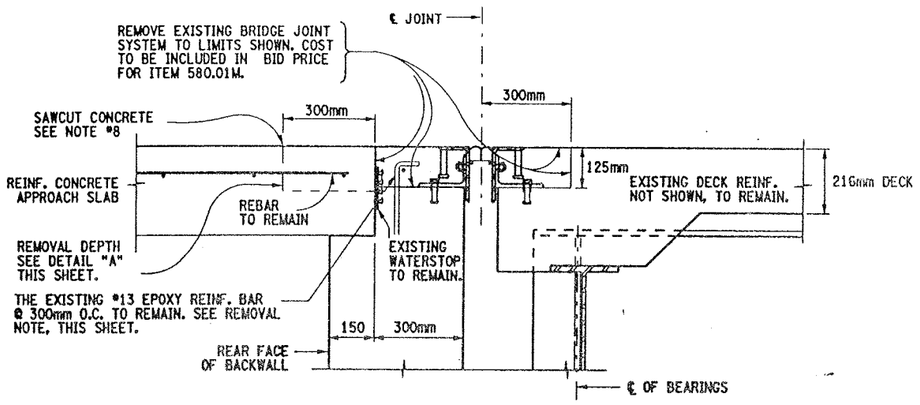

SECTION A-A
EXISTING ABUTMENT JOINT
NOT TO SCALE

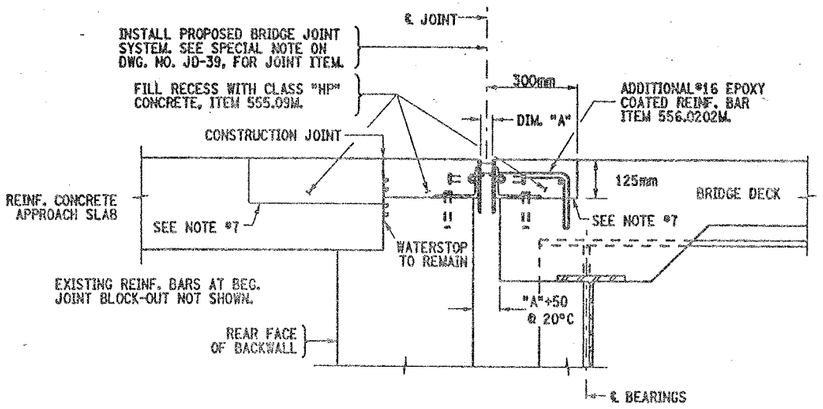

PROPOSED ABUTMENT JOINT
SECTION B-B
NOT TO SCALE

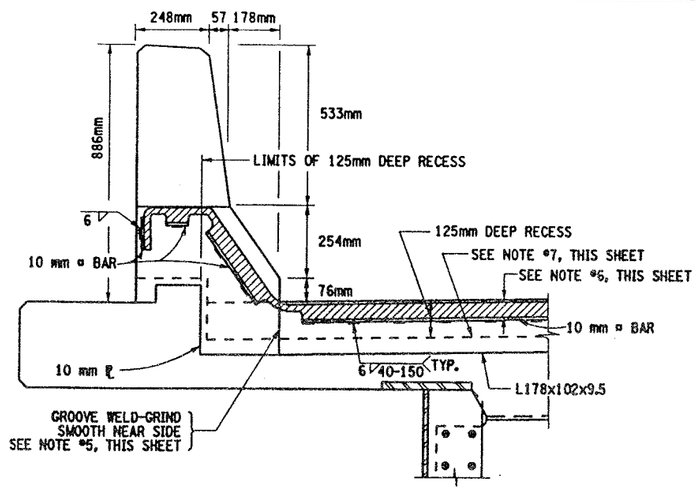

PROPOSED ABUTMENT JOINT
SECTION C-C (CONCRETE TRAFFIC BARRIER)
(REFER TO DWG. NO. JD-42 FOR OPPOSITE FASCIA DETAIL)
NOTE, CONCRETE ITEMS DIFFER.
NOT TO SCALE

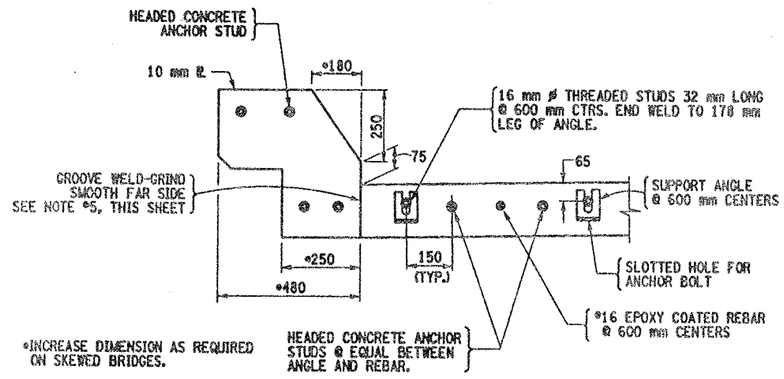

PROPOSED ABUTMENT JOINT
SECTION D-D (CONCRETE TRAFFIC BARRIER)
(ONLY THE STEEL SHOWN)

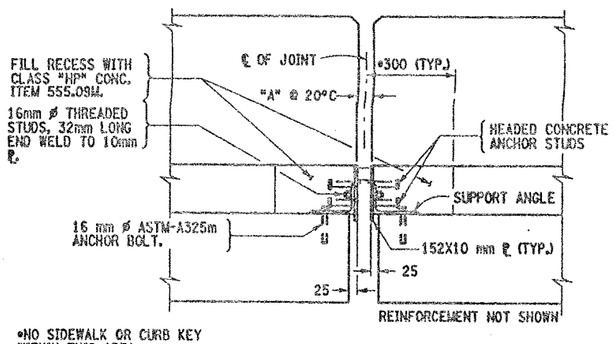

PROPOSED PIER JOINT
SECTION E-E
NOT TO SCALE

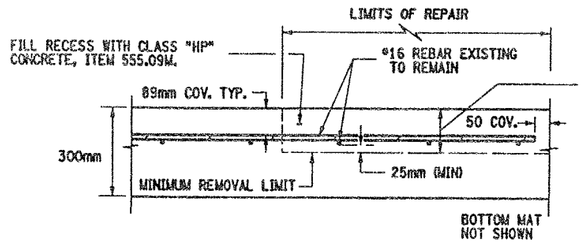

REMOVAL OF CONCRETE AT APPROACH SLAB SHALL BE PAID UNDER ITEM 579.02M

REMOVAL DEPTH OF CONCRETE AT APPROACH SLAB SECTION, TO BE 25mm MIN. BEYOND THE BOTTOM BAR OF THE TOP MAT.

THE REPAIR OF THE CONCRETE APPROACH SLAB SHALL BE FROM CURB TO CURB, AT BOTH ABUTMENTS.

APPROACH SLAB REPAIR
DETAIL "A"
NOT TO SCALE

FED ROAD REG. NO.	STATE	CONTRACT NO.	SHEET NO.	TOTAL SHEETS
1	N.Y.	D259214	404	432

BRIDGE REHABILITATION PROJECT (ELEMENT SPECIFIC)
VARIOUS BRIDGES ON INTERSTATE 481
TOWNS OF DEWITT AND CICERO
ONONDAGA COUNTY
P.I.N. 305613 B.I.N. 1072781

REMOVAL NOTE:

EXISTING EPOXY COATED REINF. BARS ENCOUNTERED AT THE JOINT BLOCK-OUTS, SHALL REMAIN. CARE SHALL BE TAKEN DURING REMOVAL OPERATIONS, NOT TO DAMAGE THE REINFORCEMENT BARS.

PRIOR TO PLACEMENT OF NEW CONCRETE THE EXISTING EPOXY BARS SHALL BE CLEANED AND ANY FIELD REPAIRS DEEMED NECESSARY BY THE ENGINEER, BE MADE AS PER SECTION 556-3.02(C) OF STANDARD SPECIFICATIONS. TO BE INCLUDED IN PRICE BID FOR ITEM 580.01M.

NOTES:

1. ACTUAL BRIDGE JOINT BLOCK-OUT DIMENSIONS MAY VARY. REMOVAL LIMITS SHALL BE TO EXISTING BLOCK-OUT LOCATIONS, AOBE.
2. EXISTING WATERSTOPS SHALL REMAIN.
3. FOR CALCULATION OF "A" DIMENSION REFER TO DWG. NO. JD-1.
4. REFER TO DWG. NO. JD-39 FOR PROPOSED PARTIAL PLAN VIEWS.
5. ALL WELDS SHALL BE GROUND SMOOTH TO THE SATISFACTION OF THE ENGINEER, ON SEAL CONTACT SIDE OF EDGE BEAM.
6. THIS DEPTH SHALL BE INDICATED ON THE SHOP DRAWINGS AND SHALL BE SUCH THAT WHEN THE SEAL IS COMPRESSED TO 50% OF ITS NOMINAL WIDTH, THE TOP OF THE SEAL SHALL BE NOT LESS THAN 6 mm NOR MORE THAN 19 mm BELOW THE TOP OF ROADWAY.
7. RECESSES RECEIVING ITEM 555.09M, AFTER SURFACE PREPARATION, THOROUGHLY WET THE CONCRETE SURFACES AND ALL POROUS SURFACES TO BE IN CONTACT WITH NEW CONCRETE FOR 12 HOURS. NOTE, THE USE OF MATERIAL SPECIF. 705-22 PORTLAND CEMENT MORTAR BONDING GROUT HAS BEEN ELIMINATED, (PROJECT PROPOSAL).
8. SAWCUT CONCRETE APPROACH SLAB TO PRODUCE NEAT REMOVAL LINES, COST BE TO INCLUDED IN PRICE BID FOR ITEM 579.02M.
9. THE CONCRETE REMOVAL AT THE APPROACH SLAB SHALL CONFORM TO STANDARD SPECIF. 579-3.02, TO BE PAID UNDER ITEM 579.02M. (AT APPROACH SLABS ONLY)

ITEMS USED:

ITEM 555.09M - STRUCT. CONCRETE, CLASS "HP" (CM)
ITEM 556.0202M - EPOXY-COATED BAR REINF. FOR STRUCT. (Kg)
ITEM 579.02M - REINFORCED BAR EXPOSURE (SM)
ITEM 580.01M - REMOVAL OF STRUCT. CONCRETE (CM)

ALL DIMENSIONS ARE IN mm UNLESS OTHERWISE NOTED

AS BUILT REVISIONS

SIGNATURE DATE

INTERSTATE 481 SB
OVER
TOTMAN ROAD

BRIDGE JOINT DETAILS

STATE OF NEW YORK
DEPARTMENT OF TRANSPORTATION

FILENAME	REGION	DATE	DRAWING NO.
305613AJJA1	3	10/02	JD-40

DESIGN SUPERVISOR ____ JOB MANAGER ____ DESIGNED BY ____ ESTIMATED BY ____ DRAFTED BY ____ CHECKED BY ____

BIN: 1072781
I481 SB / Totman Rd

DECK DETERIORATION PLAN

NOT TO SCALE

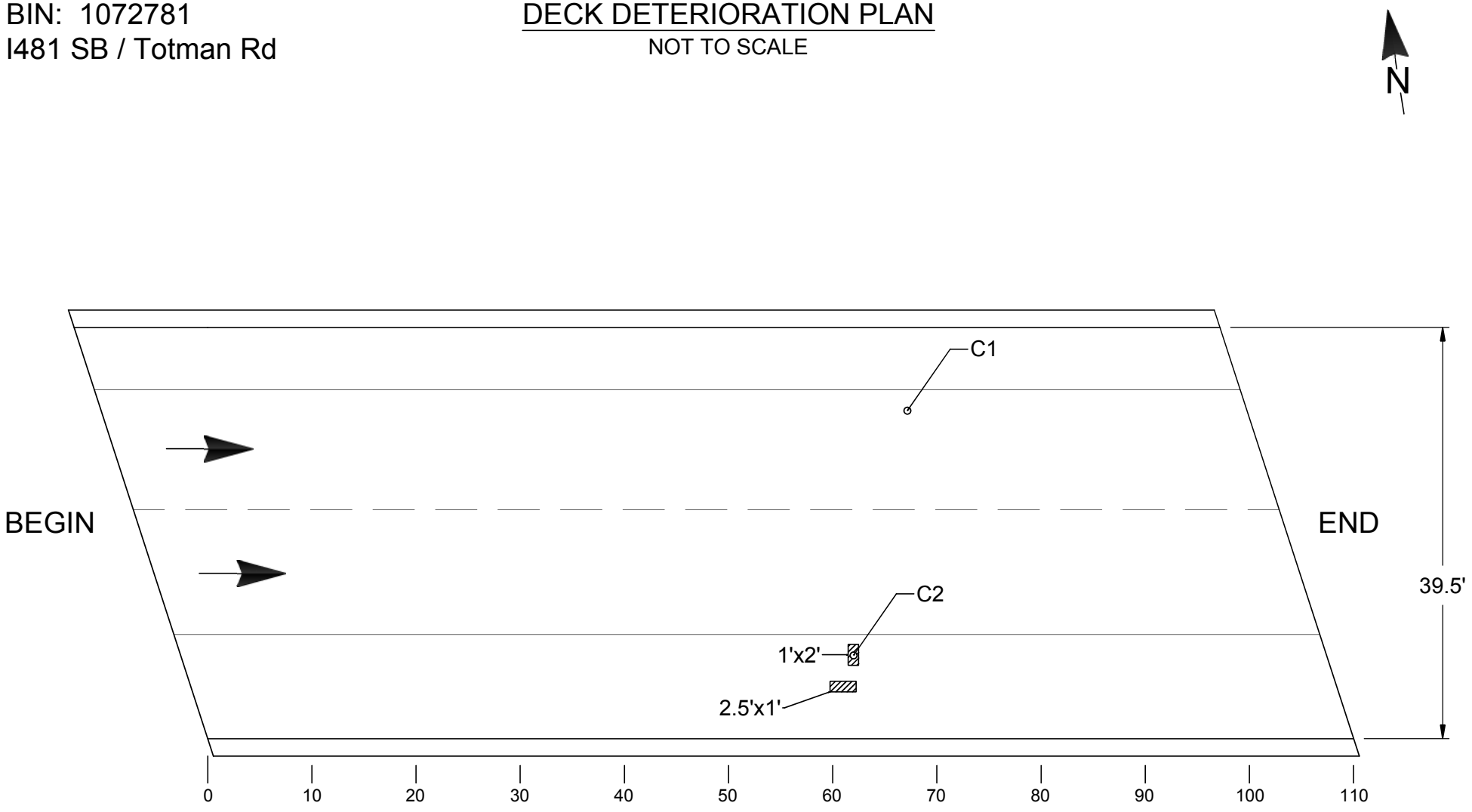

TOTAL DAMAGED AREA EQUALS 4.5 SF WHICH IS 0.1% OF DECK SURFACE

LEGEND

- Hollow Concrete
- Patch
- Coring location
- Crack

IN-DEPTH PHOTO DOCUMENTATION

BIN: 1072781
I481 SB / Totman Rd

IN-DEPTH INSPECTION
PHOTO LOCATION PLAN

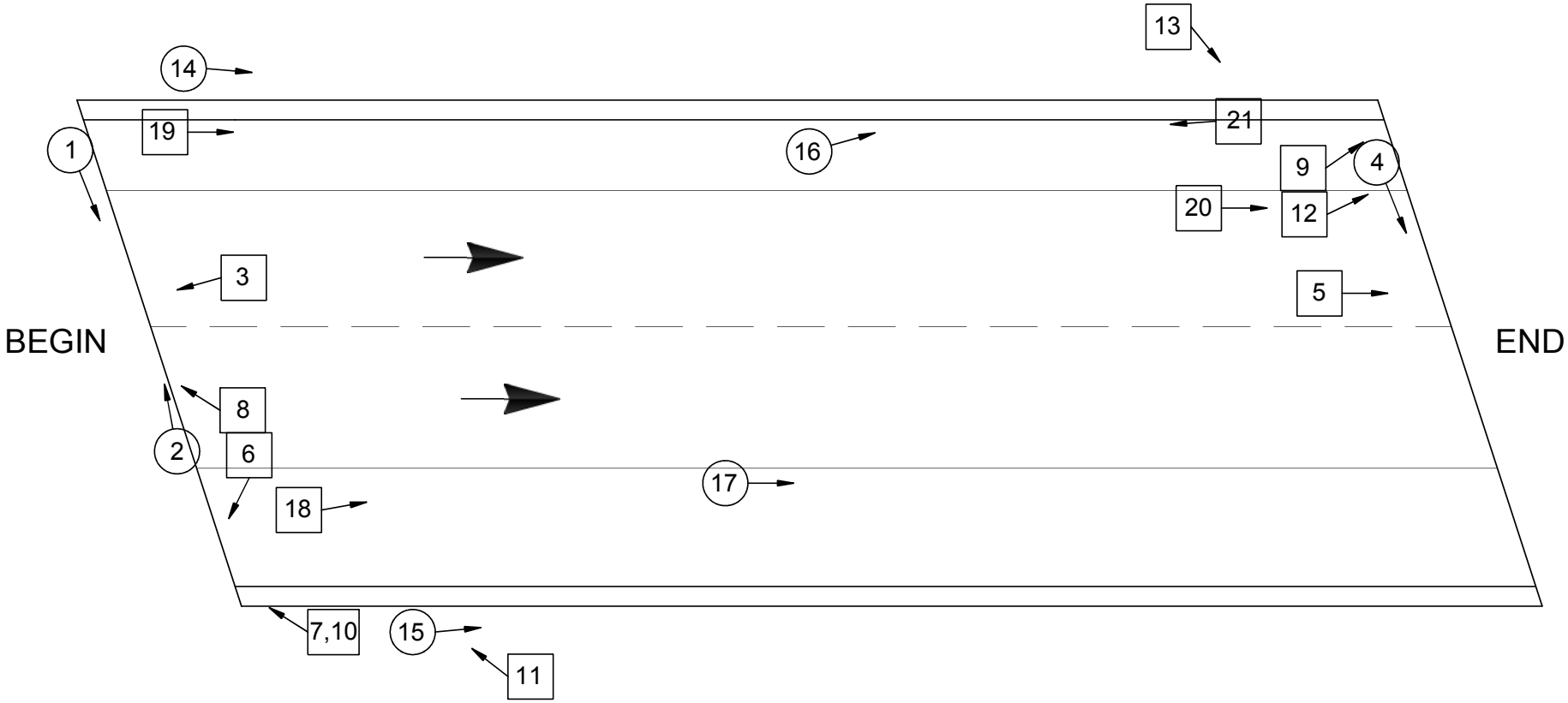



DESCRIPTION: BEGIN JOINT (L-R)

PHOTO 1



DESCRIPTION: BEGIN JOINT IN RIGHT LANE NEAR CENTERLINE OF BRIDGE

PHOTO 2

In-Depth Inspection Photos

I-481 SB over Totman Rd., BIN 1072781



DESCRIPTION: BEGIN BACKWALL IN BAY 2

PHOTO 3



DESCRIPTION: END JOINT (L-R)

PHOTO 4



DESCRIPTION: END BACKWALL IN BAY 2

PHOTO 5

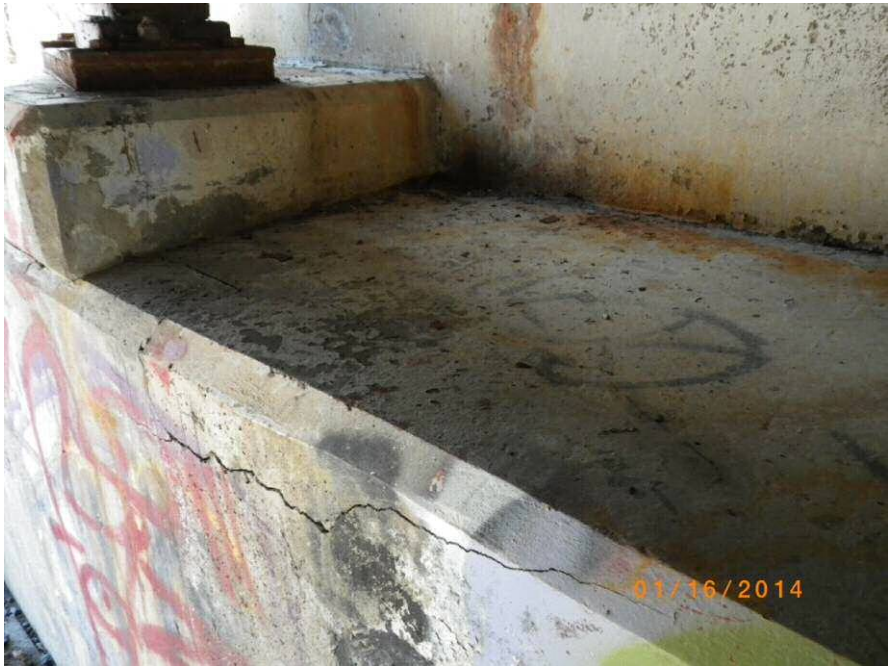

DESCRIPTION: BEGIN SEAT BAY 4

PHOTO 6



DESCRIPTION: BEGIN RIGHT SEAT

PHOTO 7



DESCRIPTION: BEGIN SEAT & STEM BAY 3

PHOTO 8



DESCRIPTION: END PEDESTAL 1 FROM RIGHT

PHOTO 9



DESCRIPTION: BEGIN RIGHT BACKWALL

PHOTO 10



DESCRIPTION: BEGIN ABUTMENT

PHOTO 11



DESCRIPTION: END STEM UNDER BAY 1

PHOTO 12



DESCRIPTION: END ABUTMENT

PHOTO 13



DESCRIPTION: LEFT FASCIA (B-E)

PHOTO 14



DESCRIPTION: RIGHT FASCIA (B-E)

PHOTO 15



DESCRIPTION: LEFT PARAPET AT 70’

PHOTO 16



DESCRIPTION: RIGHT SHOULDER FROM MIDSPAN

PHOTO 17



DESCRIPTION: FRAMING (B-E)

PHOTO 18

In-Depth Inspection Photos

I-481 SB over Totman Rd., BIN 1072781



DESCRIPTION: LEFT OVERHANG (B-E)

PHOTO 19



DESCRIPTION: BAY 1 NEAR END (B-E)

PHOTO 20

In-Depth Inspection Photos

I-481 SB over Totman Rd., BIN 1072781



DESCRIPTION: G1 (E-B)

PHOTO 21

DESCRIPTION:

PHOTO

ASBESTOS SAMPLING SURVEY

Asbestos Sampling Survey

Location:

BIN 1072781
Interstate Route I-481 South Bound
over Totman Road

Prepared for:

New York State
Department of Transportation

PIN 3056.13.111

LaBella Project No. 201001

August 2001

Table of Contents

Page

I. Project Summary 1

II. Site Description 1

III. Inspection Procedures 1

IV. Results 2

Certification 2

Figures and Table

I. Project Summary

In accordance with conditions of Term Agreement D012606, LaBella Associates, P.C. conducted an asbestos sampling survey of the Interstate Route I-481 south bound bridge over Totman Road. Based on laboratory analyses of bulk samples collected, no asbestos-containing materials were identified.

II. Site Description

The Site is located in Onondaga County, New York. For the purpose of this report, the Site consists of the Interstate Route I-481 south bound bridge over Totman Road. (See attached FIGURE 1 - Site Location Map).

III. Inspection Procedures

The following procedures were used to obtain the data for this Report:

A. A review of record drawings supplied by Region 3 personnel and a visual inspection of the subject structure were conducted to identify potential visible/accessible sources of asbestos-containing materials. Observations and notes were made to provide a description of the structure, and an estimate of the approximate amount, length, or area of ACM present.

B. Physical or operational constraints, which might affect the removal of the ACM, were identified and reported.

C. Bulk samples of suspected ACM were collected during the site inspection of the subject structure. Samples were taken from each homogeneous area that may contain ACM.

D. Samples were submitted for analysis. Preliminary PLM analyses of NOB materials were performed by LaBella Laboratories, a NYSDOH approved laboratory, to determine the presence and percentage of asbestos in each sample. TEM analyses of NOB materials, if necessary, were performed by AMA Analytical, Inc.

E. Lab results were used to determine the approximate location, type, and amount of the verified ACM.

F. A drawing of the structure at the Site was created, in order to show sample locations and the approximate locations and amounts of confirmed ACM observed in accessible locations.

Only accessible areas were inspected. Inaccessible areas, such as areas within the bridge or the approaches to the bridge were not included in this inspection. No investigation was conducted by LaBella Associates to determine the presence of underground utilities on or in the immediate vicinity of the Site. Actual sample locations are shown in the attached FIGURE 2. Results of bulk sample analyses are tabulated in the attached TABLE.

IV. Results

BIN 1072781 Interstate Route I-481 South Bound over Totman Road

Based on laboratory analyses of bulk samples collected, no asbestos-containing materials were identified.

Certification

LaBella Associates, P.C. certifies the accuracy of this report, to the best of our knowledge, based on the information collected as described in the Inspection Procedures Section of this investigation.

Figures & Table

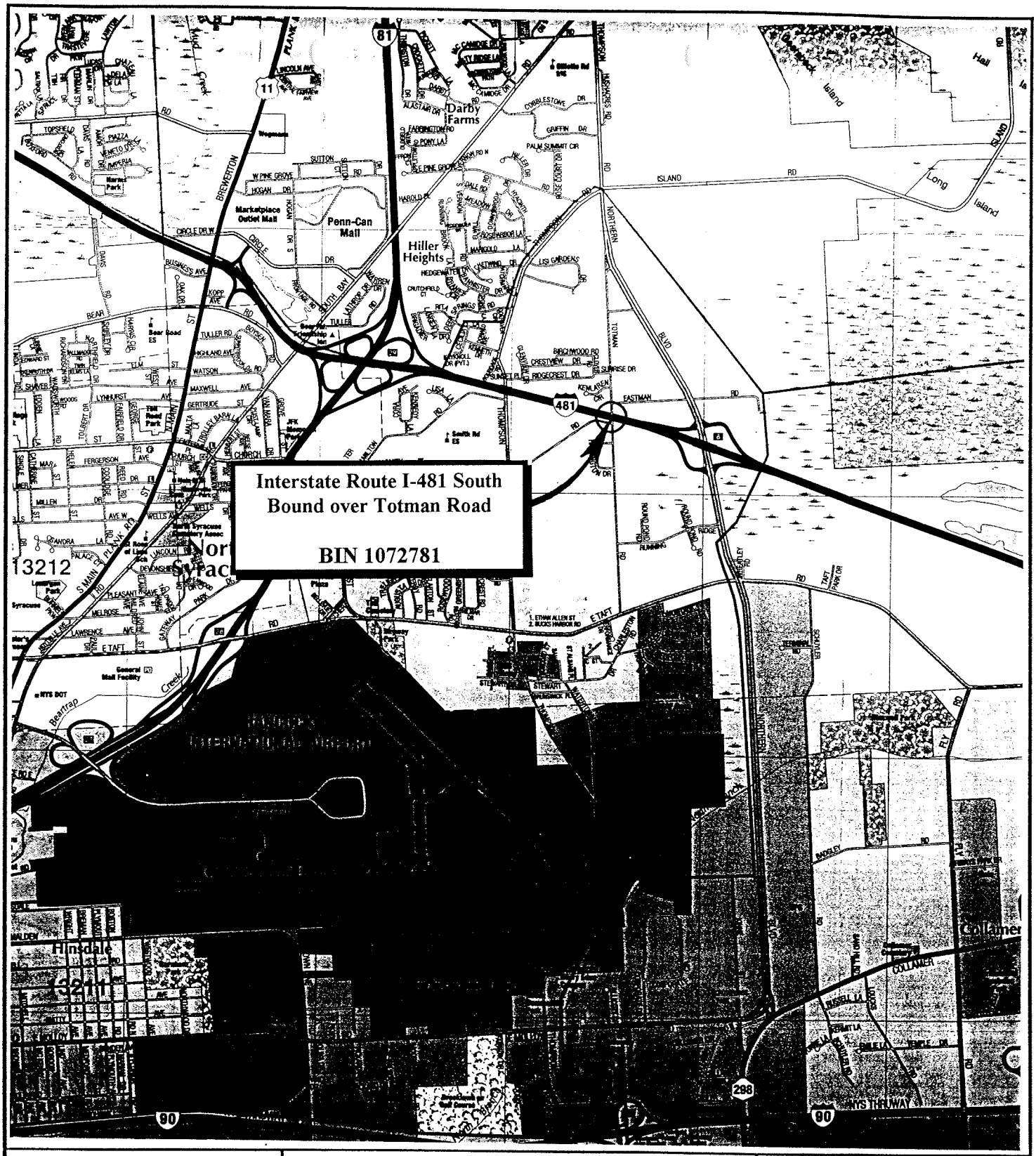

N

FIGURE 1
Site Location Map

Interstate Route I-481 South Bound over Totman Road Onondaga County, New York

LABELLA

PROJECT NO. 201001

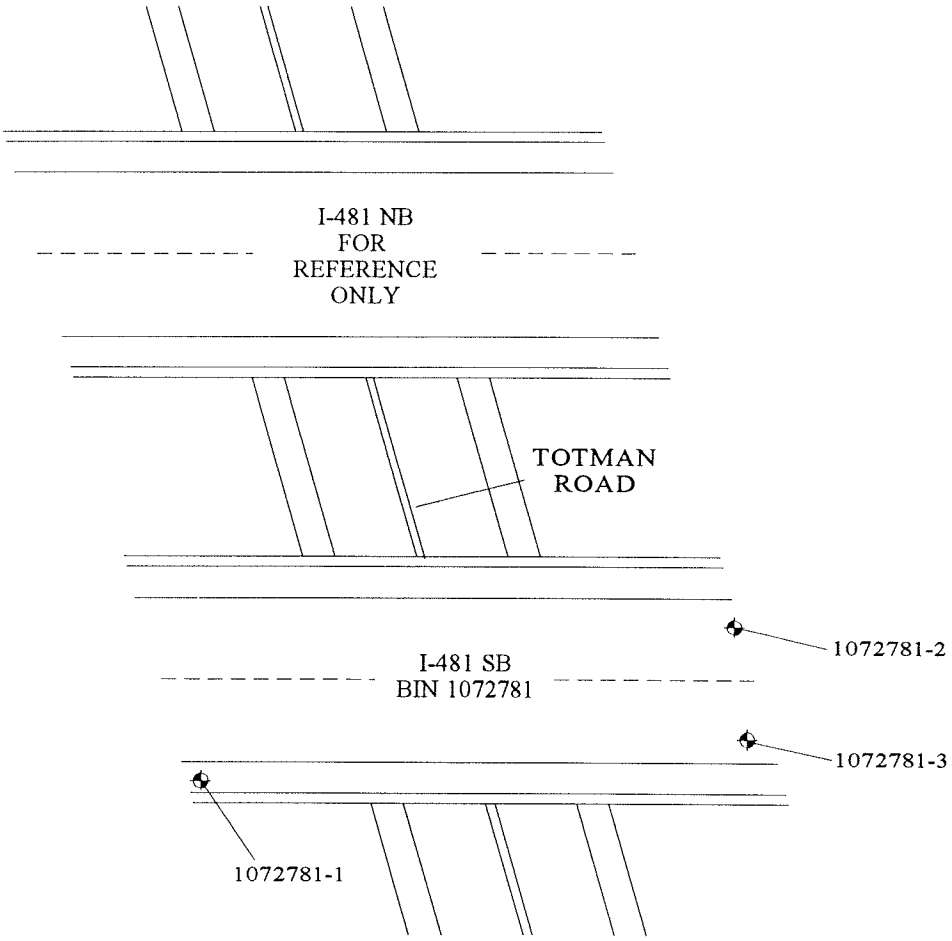

NOTE: NO ASBESTOS-CONTAINING MATERIALS IDENTIFIED.

LEGEND

◆ 1072781-1 SAMPLE LOCATION

NORTH	PROJECT TITLE: ASBESTOS SAMPLING SURVEY 19 BRIDGES ALONG INTERSTATE I-481 ONONDAGA COUNTY, NEW YORK	PROJECT NO. 201001 PIN 3056.13.111
	FIGURE TITLE: FIGURE 2 BIN 1072781 I-481 SB OVER TOTMAN ROAD SAMPLE LOCATIONS & CONFIRMED ACM	NOT TO SCALE DATE: AUGUST, 2001

Bulk Sample Results Table

Asbestos Sampling Survey
BIN 1072781
Interstate Route I-481 South Bound
over Totman Road
Onondaga County, New York
LaBella Project # 201001
PIN 3056.13.111

Sample #	Sample Location	Type of Material	Results % Asbestos	Amount of Material	Specification Item No.
1072781-1	West End of Bridge at Base of Fence	Gray Caulking Compound	None Detected	N/A	N/A
1072781-2	East End of Bridge Beneath Bearing	Bearing Pad	None Detected	N/A	N/A
1072781-3	East End of Bridge on Back Wall	Gray Masonry Coating	None Detected	N/A	N/A

LATEST BIENNIAL INSPECTION REPORT

Inspection Date: 5/11/2010 RC: 33 BIN: 1072781

Bridge Ratings

Carried: 481I 481I33032132 Crossed: TOTMAN ROAD CheckValue: 1,754,470,094

Inspection Agency: 10 - NYSDOT Type of Inspection: 1 - BIENNIAL
GTMS: A02 -- Unpainted Steel - Stringer/Multi-Beam or Girder
POSTINGS: See Gen Rec Page 1 for Postings at time of inspection.
Further Investigation Needed: No
State Highway Number: 70-7 Milepoint: 14.99 AADT/Yr: 15976 / 2007
Orientation: 3 - East Political Unit: 0161 - Town of CICERO Year Built: 1986
Total Spans: 1 Ramp Bridge Attached To Span: NA BIN: NA
General Recommendation: 6 Computed Condition Rating: 5.587

Abutment Ratings:	**Beg Abut**	**End Abut**
Joint with Deck	5	5
Bearings, Bolts, Pads	5	4
Seats and Pedestals	6	5
Backwall	6	6
Stem (Breastwall)	6	6
Erosion or Scour	6	6
Footings	9	9
Piles	8	8
Recommendation	6	6

Wingwall Ratings:	**Beg Abut**	**End Abut**
Walls	6	6
Footings	9	9
Erosion or Scour	6	6
Piles	8	8

Channel Ratings:	**Channel**
Stream Alignment	8
Erosion and Scour	8
Waterway Opening	8
Bank Protection	8

Approach Ratings:	**Approaches**
Drainage	5
Embankment	6
Settlement	5
Erosion	6
Pavement	4
Guide Railing	5

Number of Flags Issued:

RED: 0 Yellow: 0 Safety: 0

Vulnerability Reviews Recommended: 1=Yes, 2=No, 3=NA, X=NotActive

Hydraulic: 3	Overload: X	Steel: 2
Collision: 2	Concrete: X	Seismic: X

Inspector's Signature: CheckValue: 1,754,470,094 Date: 5/11/2010

Peter Riehlman,PE () (Inspector ID:3000052)

Signed copy of this inspection report is available in the appropriate NYSDOT Regional Office

Reviewed By: Date: 6/21/2010

James R. Manning,PE () (QC ID:3000023)

Signed copy of this inspection report is available in the appropriate NYSDOT Regional Office

Inspection Date: 5/11/2010 RC: 33 BIN: 1072781

Span Ratings

Carried: 481I 481I33032132 Crossed: TOTMAN ROAD CheckValue: 1,754,470,094

Deck Element Ratings:	**001**
Wearing Surface	5
Curbs	8
Sidewalks, Fascias	6
Railings, Parapets	6
Scuppers	8
Gratings	8
Median	8
Mono Deck Surface	6

Superstructure Ratings:	**001**
Structural Deck	6
Primary Members	6
Secondary Members	6
Paint	4
Joints	8
Recommendation	6

Pier Ratings:	**001**
Bearings, Bolts, Pads	8
Pedestals	8
Top of Cap or Beam	8
Stem Solid Pier	8
Cap Beam	8
Pier Columns	8
Footings	8
Erosion or Scour	8
Piles	8
Recommendation	8

Utility Ratings:	**001**
Lighting	8
Sign Structure	8
Utilities and Support	8

Field Notes:

Field Date	Arrival	Departure	Temp (C)	Temp (F)	Weather Conditions
5/11/2010	11:00:00 AM	1:00:00 AM		55	ptly cldy.

Inspection Date: 5/11/2010 RC: 33 BIN: 1072781

Inspection Notes

Carried: 481I 481I33032132 Crossed: TOTMAN ROAD CheckValue: 1,754,470,094

Note ID: 331010727810002

Approaches: Drainage -- Rated 5, Was 4
Referenced Photos: "1"
Sand has been cleaned from approach and bridge deck allowing proper drainage.

Note ID: 331010727810000

Approaches: Pavement -- Rated 4, Was 5
Referenced Photos: "2"
Beg approach pavement adjacent to joint with deck has a concrete spall 3' long by 1.5" deep see photo

Note ID: 331010727810003

Span 001 -- Superstructure: Paint -- Rated 4, Was 4
Referenced Photos: "3", "4"
Lower outer flanges of G1 thru G5, upper surface, show degree of coarseness with flaking of self weathering steel.

Left or outer web of G1, for full height and full length is very coarse and turning slightly dark.

Overall paint system loss is 10%.

Note ID: 331010727810001

End Abut -- Abutment: Bearings, Bolts, Pads -- Rated 4, Was 4
Referenced Photos: "3"
New bearings installed under contract # 259214 allows upgrading of this item, however, the end left fascia bearing is still the original one and has some minor delamination of the steel which accounts for the 4 rating.

Inspection Date: 5/11/2010 RC: 33 BIN: 1072781

Inspection Photos in Photo Number Order

Carried: 481I 481I33032132 Crossed: TOTMAN ROAD CheckValue: 1,754,470,094

Beg appr



Photo Number: 1 Photo Filename: 100_3168 (Medium).

Beg appr, Rt lane



Photo Number: 2 Photo Filename: 100_3169 (Medium).

Inspection Date: 5/11/2010 RC: 33 BIN: 1072781

Inspection Photos in Photo Number Order

Carried: 481I 481I33032132 Crossed: TOTMAN ROAD CheckValue: 1,754,470,094

End Brg #1/Lt face G-1



Photo Number: 3 Photo Filename: 100_3162 (Medium).

Location: End G-5, Lt face



Photo Number: 4 Photo Filename: 100_3163 (Medium).

Inspection Date: 5/11/2010 RC: 33 BIN: 1072781

Inspection Sketches in Sketch SysID Order

Carried: 481I 481I33032132 Crossed: TOTMAN ROAD CheckValue: 1,754,470,094

Sketch ID: 331010727810000 Sketch Filename: LdRatNCL.10

General Sketch for Bridge
Referenced Photos:

Region 3 LoadRatingFieldCheckForm

NYSDOT BRIDGE INSPECTION REPORT			
SHEET	1	OF	1

LOAD RATING FIELD CHECK FORM

BIN:	1072781	Insp. Date:	05/11/2010

Dead Load - Note Changes since Last load Rating or state "NONE":

NONE

Section Loss -Note Changes since Last load Rating or state "NONE":

NONE

Additional Notes:

NONE

Attachments:

Team Leader: Peter Riehlman

Inspection Date: 5/11/2010 RC: 33 BIN: 1072781

Gen. Rec., Postings, Federal Ratings, etc.

Carried: 481I 481I33032132 Crossed: TOTMAN ROAD CheckValue: 1,754,470,094

Overall Condition:

GENERAL RECOMMENDATION: 6

Computed Condition Rating: 5.587

Problems Requiring Action:

NO Further Investigation Needed

NO Flags Issued

POSTINGS:

Inspector Confirmed existing Posting data as correct.
Posted Vertical Clearance ON the bridge is: No Posting
Posted Vertical Clearance UNDER the bridge is: No Posting
No Load Restriction is posted on this bridge

Overloads Observed:

NO Overload Vehicles were observed on this bridge

FEDERAL RATINGS:

NBI Deck Condition: 8
NBI Superstruct Condition: 8
NBI Substruct Condition: 8
NBI Channel Condition: N
NBI Culvert Condition: N

Diving Inspection Needs:

Diving Inspection Required? No Date of Last Diving Inspection: No Date

Inventory Problems:

Inventory Problems Exist? No

Miscellaneous:

Time Required to Inspect Bridge: 2 Hours

Lane Closure Needs: None Required

No Railroad Flagging Required

There is a Pedestrian Fence 12.00 Feet High

No Snow Fence

The BIN Plate is in OK condition

Inspection Date: 5/11/2010 RC: 33 BIN: 1072781

Gen. Rec., Postings, Federal Ratings, etc.

Carried: 481I 481I33032132 Crossed: TOTMAN ROAD CheckValue: 1,754,470,094

Special Emphasis Inspection Required:

Non-Redundant/Fracture Critical Members - No
Pin and Hangers - No
Fatigue-Prone Welds - No
Non-Categorized Fatigue-Prone Details - No
Other (Specified in Text) - No

Special Emphasis Details:

No Special Emphasis Inspection Required.

General Notes To the Next Inspector:

Improvements Observed:

Inspection Date: 5/11/2010 RC: 33 BIN: 1072781

Review Progress and Personnel Present at Inspection

Carried: 481I 481I33032132 Crossed: TOTMAN ROAD CheckValue: 1,754,470,094

Inspection Submission Status:

Submitted to QC Engineer on: 5/14/2010
QC Submission Number: 353002

QC Review Completed: 6/21/2010
QC Engineer: James R. Manning

Submitted to Liaison Engineer on: 6/25/2010
Liaison Submission Number: 53007

Liaison Review Completed: 7/8/2010
Liaison Engineer: TODD M. HERMANN

Submitted for BIIS Processing on: 7/9/2010
BIIS Submission Number: .kp1

Current Status: Keypunched, Sent to BIIS
Check Value: 1,754,470,094

Personnel Present During Inspection:

Peter Riehlman	- Team Leader
Rebecca Maurer	- Assistant Team Leader
Rebecca Maurer	-
Peter J. Riehlman	-

Inspection Date: 5/11/2010 RC: 33 BIN: 1072781

Inspection Access Requirements

Carried: 481I 481I33032132 Crossed: TOTMAN ROAD CheckValue: 1,754,470,094

Equipment Required for Inspection

No Access Requirement Changes Noted During This Inspection.
This Listing is from the Inventory Database.

ACCESS CATEGORIES FOR ENTIRE BRIDGE
Required: Walking

ACCESS CATEGORIES FOR SPAN 1
Required: Walking

Inspection Date: 5/11/2010 RC: 33 BIN: 1072781

Culvert Measurements

Carried: 481I 481I33032132 Crossed: TOTMAN ROAD CheckValue: 1,754,470,094

Culvert Measurements

NO CULVERT DATA FOR BIN 1072781

Standard Photos **RC: 33 BIN: 1072781**

Carried: 481I 481I33032132 Crossed: TOTMAN ROAD

1072781_LOCATION_MAP.JPG

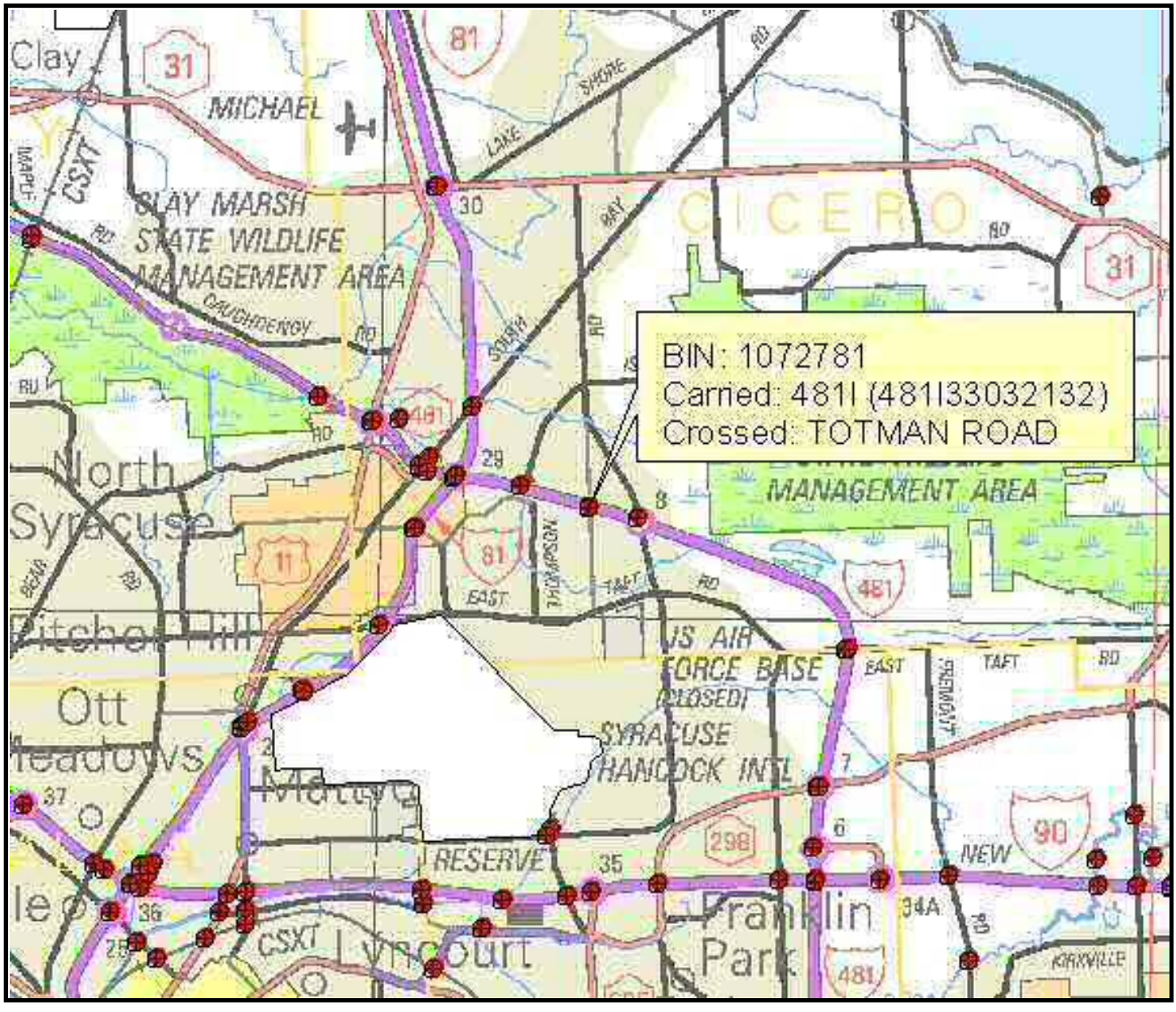

Standard Photos **RC: 33 BIN: 1072781**

Carried: 481I 481I33032132 Crossed: TOTMAN ROAD

1072781_QUAD_MAP.JPG

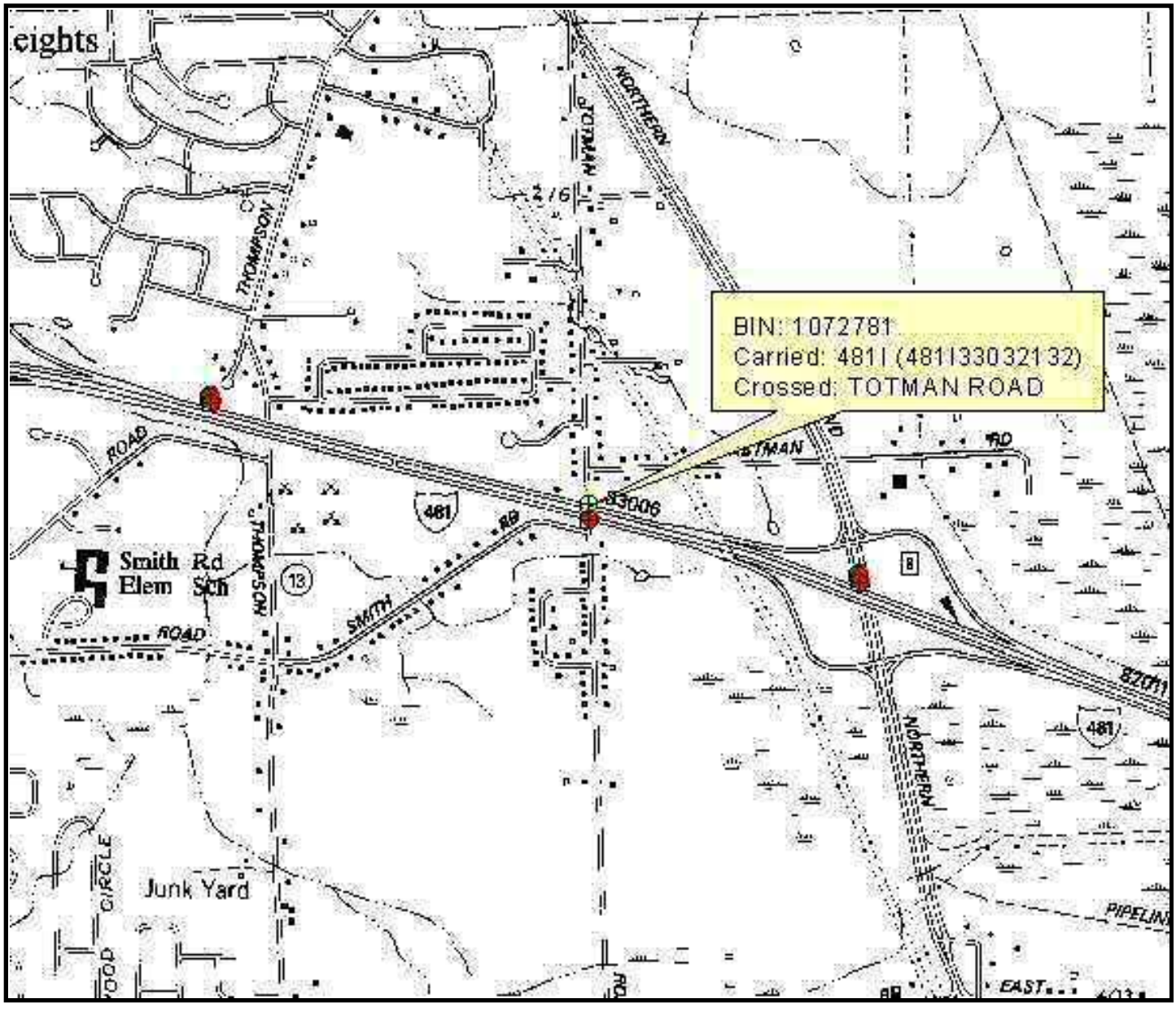

Standard Photos **RC: 33 BIN: 1072781**

Carried: 481I 481I33032132 Crossed: TOTMAN ROAD

BegAbutWing.02.JPG

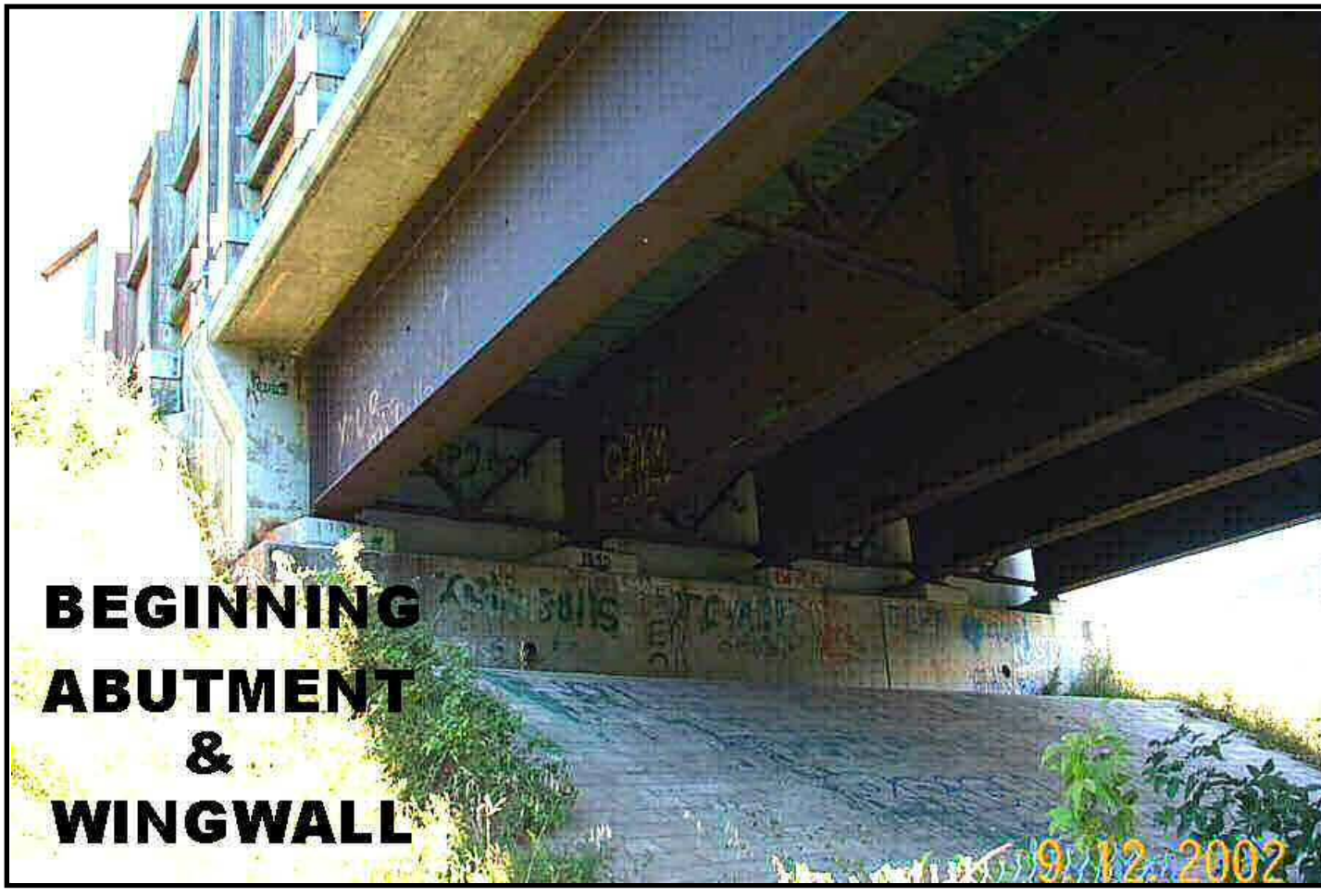

Standard Photos **RC: 33 BIN: 1072781**

Carried: 481I 481I33032132 Crossed: TOTMAN ROAD

BeginningApproach.02.JPG

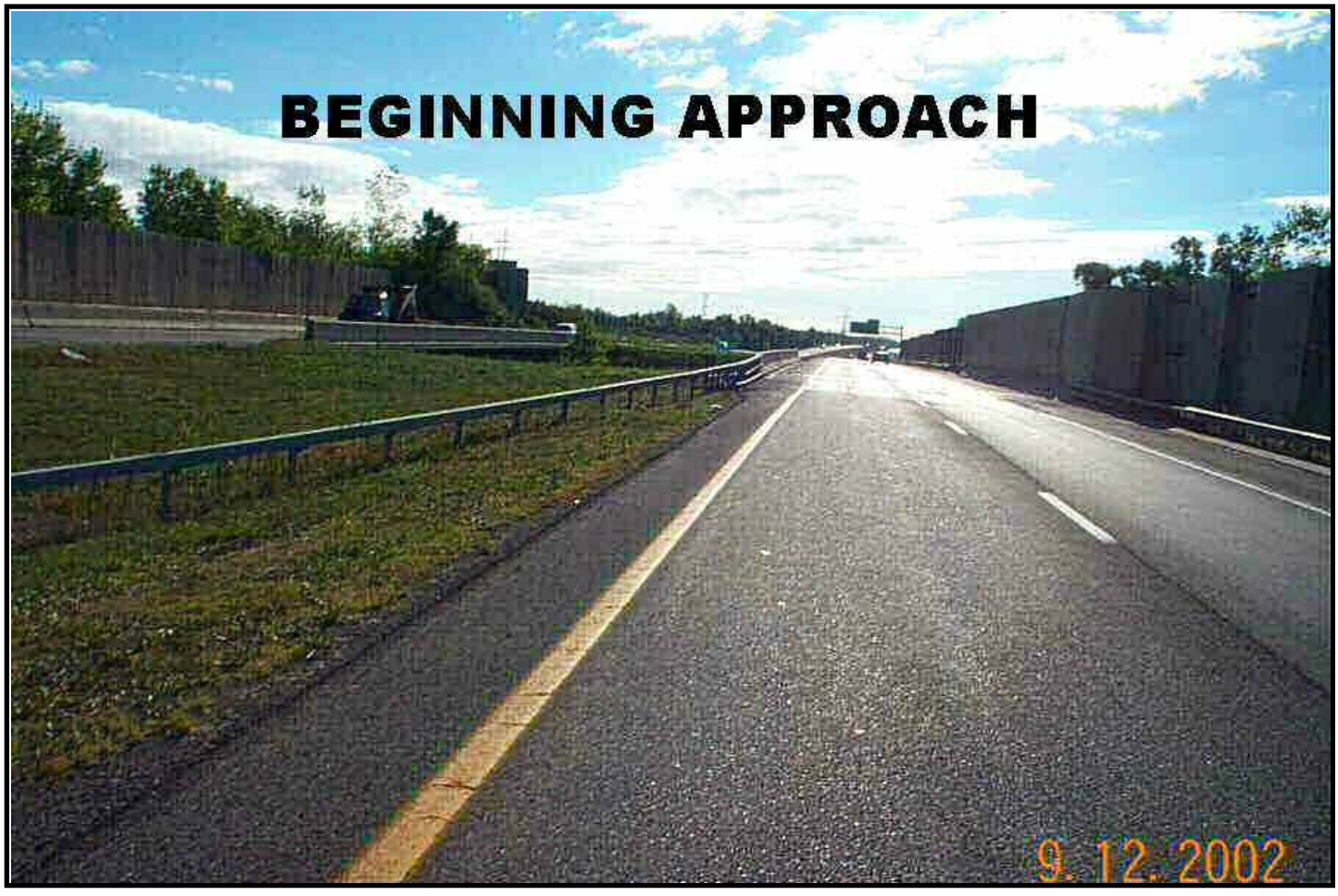

Standard Photos **RC: 33 BIN: 1072781**

Carried: 481I 481I33032132 **Crossed: TOTMAN ROAD**

CrossedLeft.02.JPG

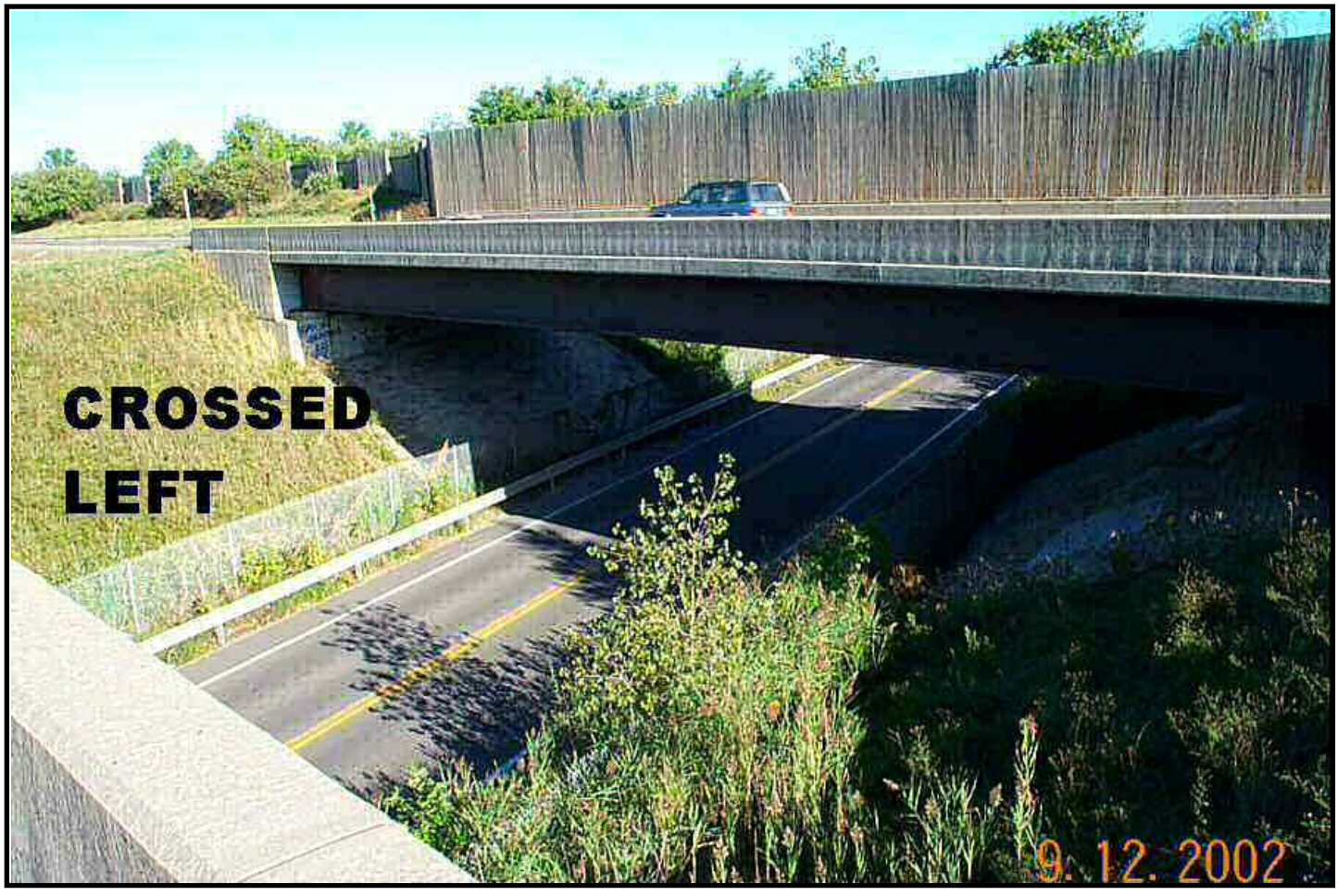

Standard Photos **RC: 33 BIN: 1072781**

Carried: 481I 481I33032132 Crossed: TOTMAN ROAD

EndApproach.02.JPG



Standard Photos **RC: 33 BIN: 1072781**

Carried: 481I 481I33032132 Crossed: TOTMAN ROAD

FrameDeck.02.JPG

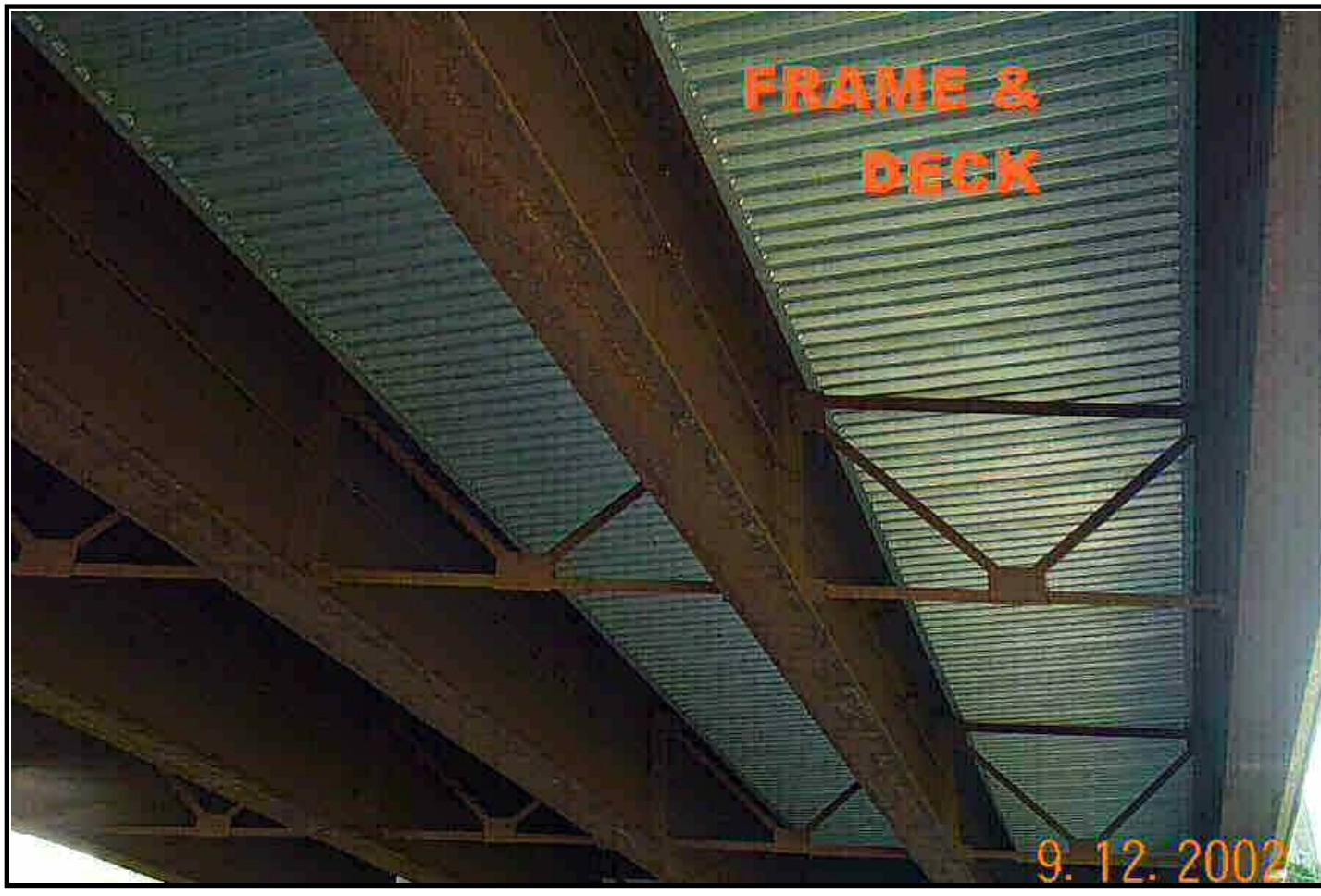

Standard Photos **RC: 33 BIN: 1072781**

Carried: 481I 481I33032132 Crossed: TOTMAN ROAD

LeftElevation.02.JPG



Standard Photos **RC: 33 BIN: 1072781**

Carried: 481l 481l33032132 Crossed: TOTMAN ROAD

RightElevation.02.JPG

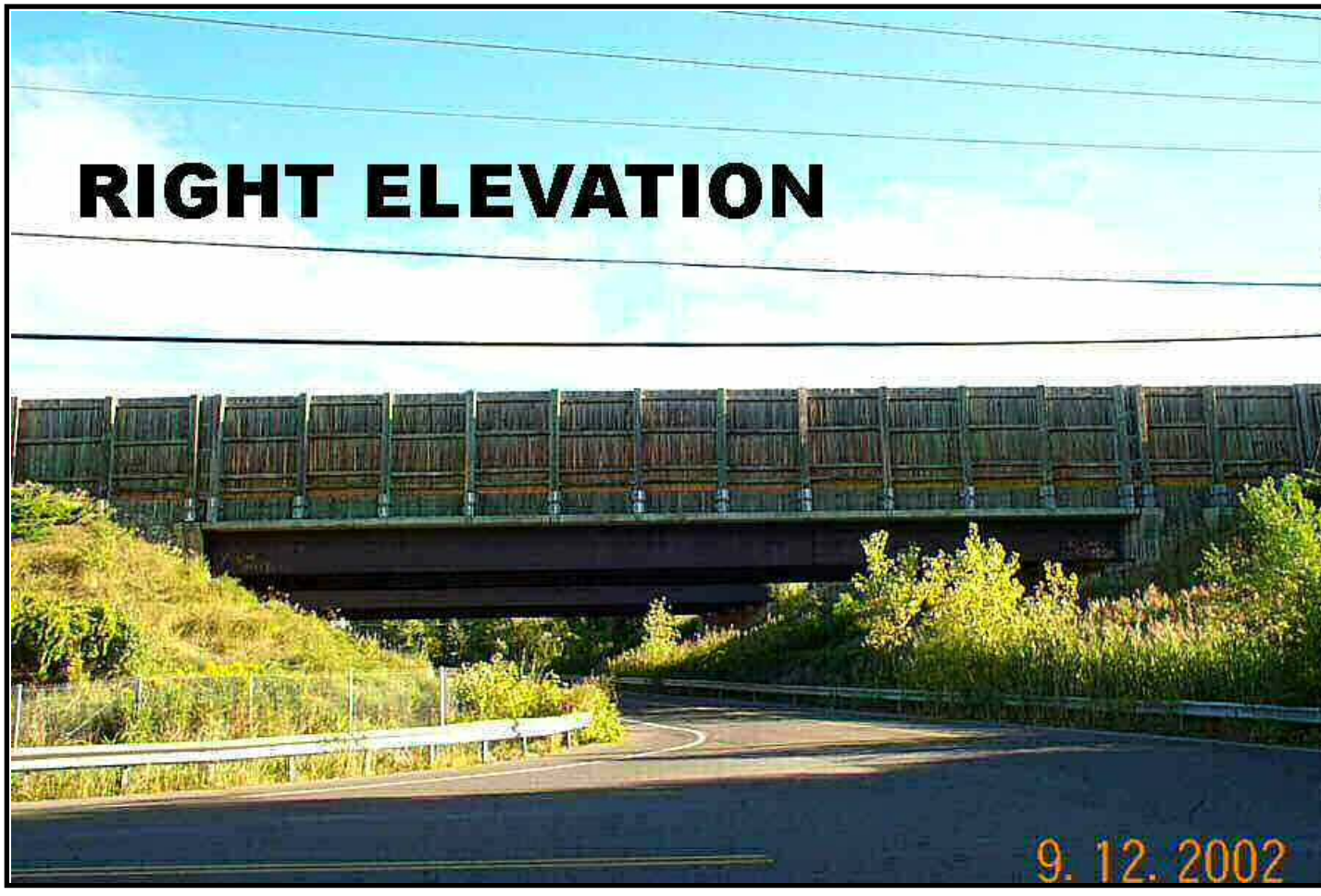

LEVEL 1 LOAD RATING SUMMARY SHEET

Region/County Region 3/Onondaga BIN 1072781
Feature(s) Carried and Crossed I-481 Southbound/Totman Road
Date of field inspection upon which Level 1 rating is based 1/16/2014

OVERALL BRIDGE RATTNGS (BASED ON LOWEST RATED ELEMENTS):

Total number of rating units 1

	H inventory	H operating	HS inventory	HS operating
Rating	H 30.89 (tons)	H 51.58 (tons)	HS 50.80 (tons)	HS 84.83 (tons)
Lowest rated element	Interior Girders G2 and G3	Interior Girders G2 and G3	Interior Girders G2 and G3	Interior Girders G2 and G3

Analysis method LFR Comments

Individual Rating Unit Level 1 values:

Rating unit span(s) 1

Main member ratings

	H inventory	H operating	HS inventory	HS operating
Rating	H (tons)	H (tons)	HS (tons)	HS (tons)
Lowest rated element				

Analysis method Comments

Floorbeam ratings

	H inventory	H operating	HS inventory	HS operating
Rating	H (tons)	H (tons)	HS (tons)	HS (tons)
Lowest rated element				

Analysis method Comments

Stringer ratings

	H inventory	H operating	HS inventory	HS operating
Rating	H 30.89 (tons)	H 51.58 (tons)	HS 50.80 (tons)	HS 84.83 (tons)
Lowest rated element	Interior Girders G2 and G3	Interior Girders G2 and G3	Interior Girders G2 and G3	Interior Girders G2 and G3

Analysis method LFR Comments

Certified by Date

Quality Control Engineer Signature Date
Agency or Company represented by certifier

Note:
-If connection ratings govern, record them under stringer ratings for stringer – floorbeam connection, floorbeam ratings for floorbeam-main member connections, etc.
-When Level 1 results indicated the need for load posting or other corrective action, the NYSDOT Regional Structures Engineer shall be notified immediately.
-Load ratings should be filed in the regional office within 60 days of completion of calculations.
-Bridges shall be flagged based on Level I results in accordance with the current NYSDOT flagging procedure.
-Bridge load posting, closure, etc. determinations shall be made as results are being produced.

PARSONS

100 Broadway
New York, NY 10005
Phone: 212-266-8300
Fax: 212-571-6825
www.parsons.com

TECHNICAL MEMORANDUM

FROM: Kian Siang Chau, P.E
NYSPE 082744

DATE: MARCH 26, 2014

RE: SEISMIC SCREENING SUMMARY
NEW YORK STATE DEPARTMENT OF TRANSPORTATION
D031085; PIN 3501.60; I-81

BIN: 1072781 (I-481 SB / Totman Rd)

This memorandum summarizes the seismic screening conducted for BIN 1072781 as part of the Interstate 81 Project in Syracuse, NY. The purpose of the screening is to determine if seismic retrofits are warranted at the superstructure to substructure connection, and if further seismic evaluation of the structure is required. This memorandum will give the screening results, retrofits required and recommendations for further seismic evaluation of the structure.

SCREENING PROCEDURE

The seismic screening was performed in accordance with the FHWA Seismic Retrofitting Manual for Highway Structures: Part 1 - Bridges, January 2006. As per the referenced manual, seismic screenings were performed for both lower level and upper level earthquake ground motion. The lower level earthquake ground motion has a reasonable likelihood of occurrence within the life of the bridge (50% probability of exceedance within a 75 year bridge life). The upper level earthquake ground motion has a finite likelihood of occurrence within the life of the bridge (7% probability of exceedance within a 75 year bridge life).

Values for the spectral acceleration for the Syracuse area used in the screening are as follows:

- Lower Level Earthquake Ground Motion for a Short Period (0.2 seconds): $S_S = 0.0251$
- Lower Level Earthquake Ground Motion for a Long Period (1.0 seconds): $S_1 = 0.0076$
- Upper Level Earthquake Ground Motion for a Short Period (0.2 seconds): $S_S = 0.139$
- Upper Level Earthquake Ground Motion for a Long Period (1.0 seconds): $S_1 = 0.047$

These values are considered constant and are the same for all seismic screenings of bridges in the Syracuse area.

The Site Class is based on the soil conditions at the bridge location. It was determined that this parameter has little effect on the results of the seismic screening because the spectral acceleration values for the Syracuse area are small. Based on this, a site class of D was used for all seismic screenings of bridges in the Syracuse area.

Bridge parameters used in the seismic screening were retrieved from the record drawings and WinBolts data.

The seismic screening takes into account the anticipated service life, importance, and the seismic exposure of the bridge to determine a seismic retrofit category (SRC). The SRC is then used to determine seismic evaluation methods and retrofit measures. There are four SRCs, A through D. Seismic retrofit category A is the lowest category; bridges in this category do not require retrofits or further seismic evaluation. Seismic retrofit category D is the highest category; bridges in this category requiring the most rigorous seismic evaluations and retrofits.

SCREENING RESULTS

The SRC for the bridge is "**C**" for lower level earthquake ground motion and "**B**" for upper level earthquake ground motion.

RETROFITS REQUIRED

No seismic retrofits are required for the bridge superstructure to substructure connection.

RECOMMENDATIONS FOR FURTHER SEISMIC EVALUATION

No further seismic evaluation is required for lower level earthquake ground motion. For the upper level earthquake ground motion, it is recommended that the capacities of the bearings are checked as per Section 5.2 of the referenced manual.

Retrofit cost estimates will be provided after any further required seismic evaluations are completed.

BRIDGE DECK EVALUATION REPORT

RECOMMENDATIONS

The bridge deck inspection findings and evaluation are used as a tool for developing the scope of work and cost estimates for the development and comparison of alternatives for the overall project.

The total damaged area of the deck is 0.1% of the total deck surface area. The cores indicate the reinforcement steel is 3.5 inches to 4.0 inches below the surface of the deck. The lab test indicates that chloride ion concentrations at all the sample locations are significantly higher than the corrosion threshold for steel.

Due to the age, condition and high chloride ion content of the bridge deck concrete, the bridge deck should be rehabilitated or replaced to meet the current standards and to mitigate excessive future maintenance costs.

ALTERNATIVES

- Rehabilitation Alternative - 3 inches Bonded Concrete Overlay
  - Scope

    The scope of this alternative will include the complete removal of the bridge parapets and fascias to the level of the original top of the deck. The joint will be removed. The top 2 inches of the entire deck will be removed and areas of deteriorated concrete must be removed to at least 1 inch below the level of the reinforcement steel and to the horizontal and vertical limit of any detectable hollow areas. Additionally, any further areas of deteriorated concrete detected will require full depth removal. Any corrosion of the reinforcement steel will be removed by sandblasting or hydro-blasting. The proposed deck overlay will be a 3 inches thick bonded concrete overlay yielding a nominal 9.5 inches standard thickness deck. A new single-sloped concrete barrier and a new armorless joint will be installed. The Level 1 Load Rating for the final condition was found to be acceptable.

- Useful Life Expectancy

  The removal of the top 2 inches of the existing deck will remove a portion of the deck with high chloride ion concentrations. It can be anticipated that chloride ions will continue to migrate into the remaining deck to the reinforcing steel resulting in further corrosion-related deterioration of the deck surface. Concrete admixtures will be included in the bonded concrete overlay to impede the continued penetration of chloride into the deck from the surface. This alternative will result in an extended useful life expectancy estimated at 20 years.

The design life of the project is 30 years (ETC + 30). This alternative does not meet the project objectives of obtaining 30 years of service life and is not evaluated further.

- Rehabilitation Alternative – 100% Deep Removal and Partial Deck Reconstruction
  - Scope

    The scope of this alternative will include the complete removal of the bridge parapets and fascias to the level of the original top of the deck. The joint will be removed. The scope of this alternative will include partial depth reconstruction with removal of the concrete to at least 1 inch below the top mat of the reinforcement steel. Additionally, any further areas of deteriorated concrete detected will require full depth removal. Any corrosion of the reinforcement steel will be removed by sandblasting or hydro-blasting. Due to the condition of the deck, full depth removal is not likely and not included in the cost estimate. The proposed deck partial reconstruction will be a nominal 5.75 inches thick concrete deck yielding a 9.5 inches standard thickness deck. A new single-sloped concrete barrier and a new armorless joint will be installed. The Level 1 Load Rating for the final condition was found to be acceptable.
  - Useful Life Expectancy

    This alternative will provide a useful life expectancy is estimated at 35 years.
  - Cost Estimate

    The estimated cost for this alternative is $411,000. The Engineer's Opinion of Probable Construction Cost worksheet is at the end of this section.

- Replacement Alternative – Cast-In-Place Concrete
  - Scope

    This scope of this alternative will include the complete demolition of the existing bridge deck, parapets, fascias and bridge joint. The bridge deck will be replaced with a new 9.5 inches standard thickness concrete deck. A new single-sloped concrete barrier and a new armorless joint will be installed. The Level 1 Load Rating for the final condition was found to be acceptable.
  - Useful Life Expectancy

    This alternative will provide a useful life expectancy is estimated at 40+ years.
  - Cost Estimate

    The estimated cost for this alternative is $553,000. The Engineer's Opinion of Probable Construction Cost worksheet is at the end of this section.

- Replacement Alternative – Pre-cast Concrete Deck Panels
  - Scope

    The scope of this alternative is similar to the Cast-In-Place Concrete Deck Replacement Alternative except the deck structure will be precast panels. This alternative offers reduced construction time over conventional construction.
  - Useful Life Expectancy

    This alternative will provide a useful life expectancy is estimated at 40+ years.
  - Cost Estimate

    The comparison of accelerated construction to conventional construction is beyond the current scope of this evaluation.

IN-DEPTH INSPECTION REPORT

D031085 P.I.N. 3501.60

ELEMENT SPECIFIC BRIDGE WORK

B.I.N. 1072782

TEAM LEADER Andrew P. Thompson 84914
NYSPE LICENSE #

ASSISTANT TEAM LEADER Mike Savino

FEATURE CARRIED I-481 Northbound

FEATURE CROSSED Totman Road

DATE FIELD WORK BEGAN 12/9/13

DATE FIELD WORK COMPLETED 2/4/14

TABLE OF CONTENTS

- STRUCTURE IDENTIFICATION
- INTRODUCTION
- PROJECT LOCATION MAP
- IN-DEPTH CONDITION DOCUMENTATION
- PLANS & SKETCHES
- IN-DEPTH PHOTO DOCUMENTATION
- ASBESTOS SAMPLING SURVEY
- LATEST BIENNIAL INSPECTION REPORT

STRUCTURE IDENTIFICATION

a. Bridge Identification Number (BIN): 1072782
b. Reference Marker: 481I 3303 2132
c. Region: NYSDOT Region 3
d. County: Onondaga
e. Town: Cicero
f. Feature Carried: I-481 Northbound
g. Feature Crossed: Totman Rd.

INTRODUCTION

a. Bridge History
   i. Year Built: 1986
   ii. Bridge Type: Single Span, Steel - Multi-girder
   iii. Span Length: 108 feet
   iv. Out-to-Out Width: 44 feet
   v. Structural Ratings and Rankings
      1. Federal Sufficiency: 95.2 (May 2012)
      2. Condition Rating: 5.381 (May 2012)
      3. General Recommendation: 6
   vi. Live Load Posting (HS25): No
   vii. National Highway System (NHS): Yes
   viii. Previous work Done: Waterproof bridge deck (1999). Joint replacement; bearing restoration; abutment repairs (2002).
   ix. Planned Future Work: N/A
b. Highway Classification
   i. Functional Classification: Urban Principle Arterial - Interstate
   ii. Traffic Volumes

YEAR	AADT Projected
2014	18379
2034	27310
2054	40581

   iii. Plan for Maintenance and Protection of Traffic:
   iv. Maintenance and Protection of traffic will be achieved by staged construction.

PROJECT LOCATION MAP

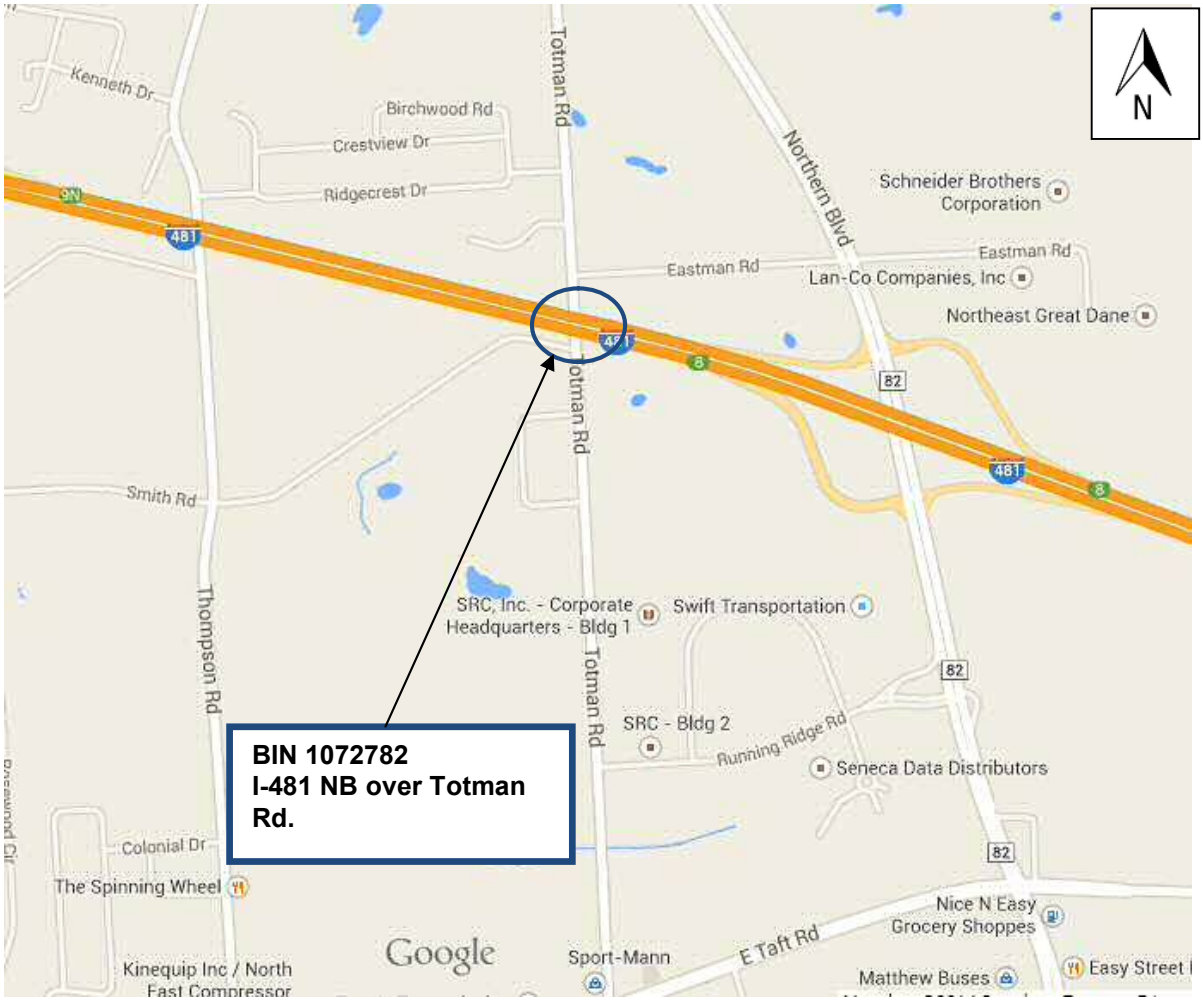

IN-DEPTH CONDITION DOCUMENTATION

NYS DEPT. OF TRANSPORTATION BRIDGE **BIN** 1072782 **SHEET:** 1 **OF** 3 **DATE:** 2/4/2014

FEATURE CARRIED: I-481 NB
FEATURE CROSSED: TOTMAN RD

TEAM LEADER: A.THOMPSON
A. TEAM LEADER: M. SAVINO

ITEM	REMARKS	PHOTO N0.
TP 349-22	Begin Abutment - Joint with Deck: The begin joint seal is losing its bond to the steel angles in some areas in the left lane (Photo 1). There is a 1' length in the left lane just left of centerline where the seal has raised up +/-1/4". The headers are in good condition. Evidence of leakage was noted underneath in the form of rust staining on the ends of the backwalls and backs of the pedestals and seats (Photo 2).	1,2
TP 349-25	End Abutment – Bearings: The end bearings are fixed and consist of a steel masonry plate and steel rocker (Photo 3). Due to spalling of the pedestal, the begin right corner of the masonry plate on Bearing 5 is undermined slightly (Photos 3 and 4). The area of undermining is less than 1 square inch, and the total design bearing area is 184 square inches. The remainder of the bearings are in good condition.	3,4
TP 349-26	Begin Abutment – Seats and Pedestals: The seat in Bay 4 has a 7” wide x 2’ long hollow area at the front adjacent to the hollow area in the stem (Photo 5). The remainder of the seats and pedestals are in good condition.	5
TP 349-27	End Abutment – Seats and Pedestals: The fascia pedestals are spalled. Pedestal 1 has a 1.5’ x 4” deep spall at its begin right corner and a 1 sf hollow area at its begin left corner (Photo 6). The seat at the left is cracked. Pedestal 5 has a 20” long x 8” deep spall at its begin right corner with exposed rebar (Photos 3 and 4). The masonry plate is undermined slightly for a total bearing area loss of less than 1 square inch. See Bearing item. The seat in Bay 1 has a 1/8” crack at the front with no hollowness (Photo 7).	3,4,6,7
TP 349-28	Begin Abutment – Backwall: The backwall has a spall at the top that extends from the middle of Bay 3 to Girder 5 (Photo 8). The spall varies in size and is 5” high x 3” deep average with no exposed rebar. The remainder of the backwall has hairline cracking with rust staining mostly at the ends (Photos 9 and 10).	8-10
TP 349-29	End Abutment – Backwall: The end backwall has scattered hairline cracking throughout (Photos 11 and 12). No evidence of significant leakage was noted.	11,12
TP 349-30	Begin Abutment – Stem: The begin stem has several hollow, cracked, and spalled areas throughout (Photos 5, 13, and 14). The sum of the hollow and spalled areas is 8.9 sf or 4.4% of the stem face. These conditions are detailed on the Begin Abutment Deterioration Sketch.	5,13,14

ITEM	REMARKS	PHOTO N0.
TP 349-31	End Abutment – Stem: The end stem is generally in good condition with no hollow or spalled areas (Photo 15).	15
TP 350-21	Deck Elements – Sidewalks/Fascias: Both fascias have map cracking throughout (Photos 16 and 17). No spalling or hollow sounding areas were found. There are no safetywalks on the structure.	16,17
TP 350-22	Deck Elements - Railings Parapets: Both parapet inside faces have light map cracking with the left parapet being slightly more pronounced (Photo 18). The outside faces are also map cracked (Photos 16 and 17). The right parapet has staining coming from the timber noise barrier above it. The timber noise barrier is in good condition.	16-18
TP 350-27	Superstructure - Structural Deck: The structural deck is an 8.5" thick concrete mono deck with SIP forms. The right lane is in good condition except for a 1 sf x 3/4" deep spall at the end near the right parapet where water ponds in the shoulder (Photo 19). The left lane has one delaminated area and one patched area near the end (Photo 20). See Deck Deterioration Plan. Overall, 0.3% of the deck is hollow. The underside has SIP forms and is exposed only at the overhangs (Photo 21). The left overhang has hairline cracking at +/-5' spacing (Photo 22). The right overhang is in good condition. The SIP form is missing 3' from the end for the full width of Bay 2 for a length of 2' (Photo 23). The deck and surrounding forms in this location are in good condition. The remainder of forms are in good condition.	19-23
TP 350-30	Superstructure - Paint: The girders are made of weathering steel and form a protective coating. Fascia Girder 5 is losing its coating in the form of large sheets on the outside portion of its bottom flange and lower portions of its web (Photo 24). Girder 1 is less severe with loss in the form of small flakes (Photo 25). Both fascia girders have small flaking on their bottom faces (Photo 26). The remainder of the steel on all of the girders has only minor peppering.	24-26

NYS DEPT. OF
TRANSPORTATION BRIDGE

BIN 1072782

SHEET: 3 OF 3
DATE: 2/4/2014

FEATURE CARRIED: I-481 NB
FEATURE CROSSED: TOTMAN RD

TEAM LEADER: A.THOMPSON
A. TEAM LEADER: M. SAVINO

ITEM	REMARKS	PHOTO N0.
	Special Emphasis Inspection Required Non-Redundant/Fracture Critical Members - No Pin and Hangers - No Fatigue-Prone Welds - No Non-Categorized Fatigue-Prone Details - No Other - No	

PLANS & SKETCHES

FED. RD. REG. NO.	STATE	FEDERAL AID PROJECT NO.	SHEET NO.	TOT. SHEETS
	NEW YORK	I-481-2(154) IR-81-2(154)	242	380

INTERSTATE RTE. 690 EXTENSION (I-481)
NORTHERN BLVD. TO BEAR ROAD INTERCHANGE
ONONDAGA COUNTY

CAPITAL PROJECT IDENTIFICATION NO. 3107.00

1072781

481 SB

Peter Reckler 11/16/88

Opalka 12/4/90

P.J.R. 11/9/92

Opalka 11/1/94

Douglas E. Heller 11/5/96

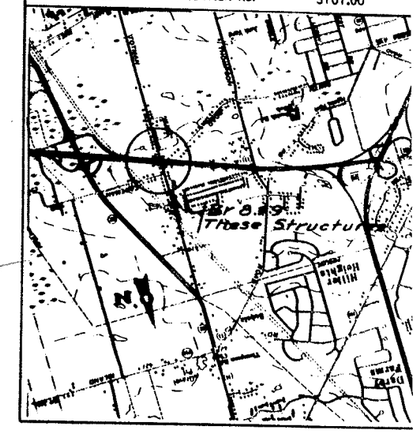

"CICERO QUADRANGLE"

Location Map

Scale: 1"=2000'

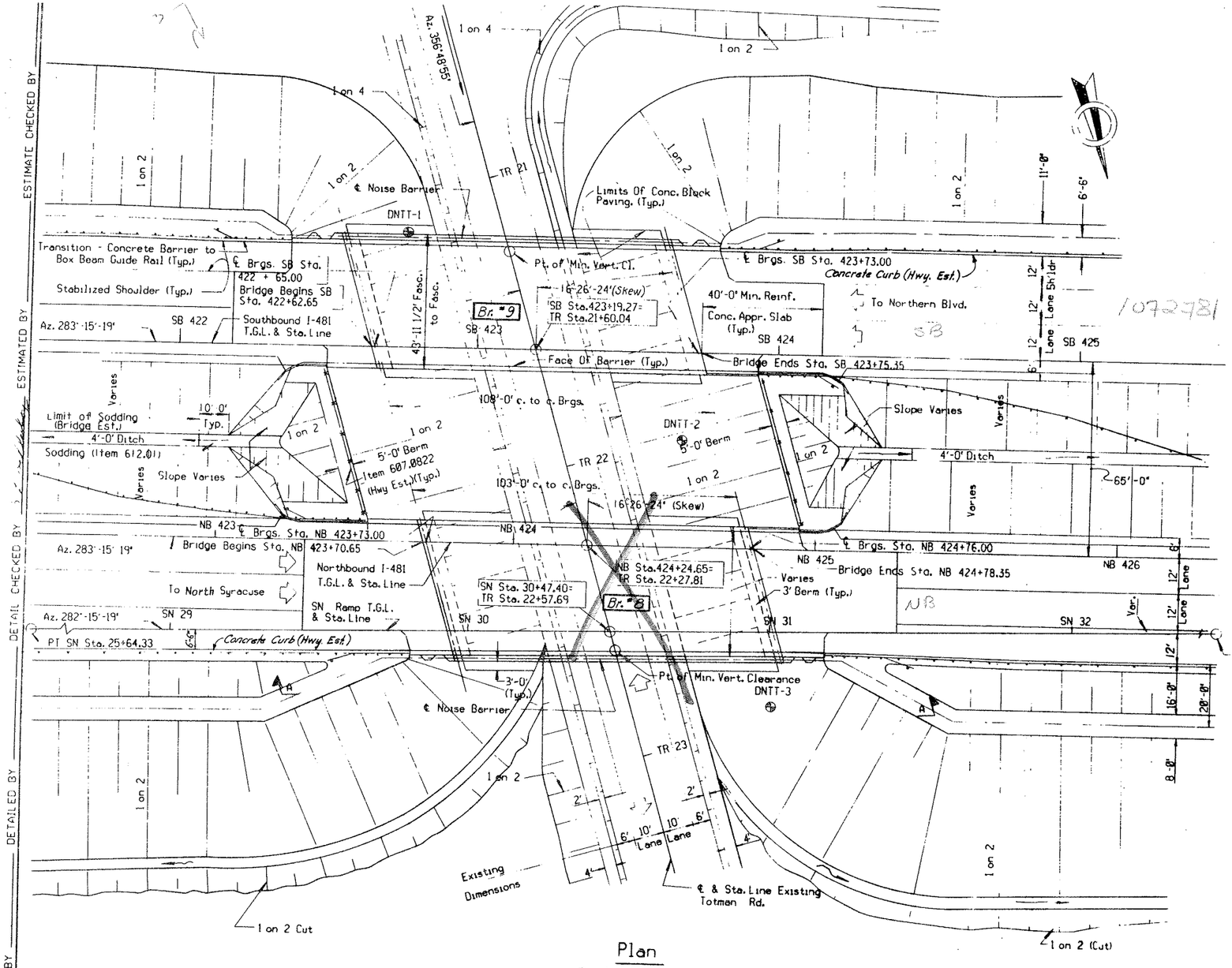

Plan

Scale: 1"=20'-0"

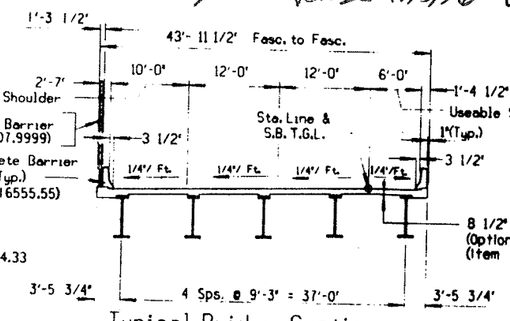

Typical Bridge Section

Southbound I-481 (Bridge #9)

B.I.N. 1072781

Scale: 1"=10'-0"

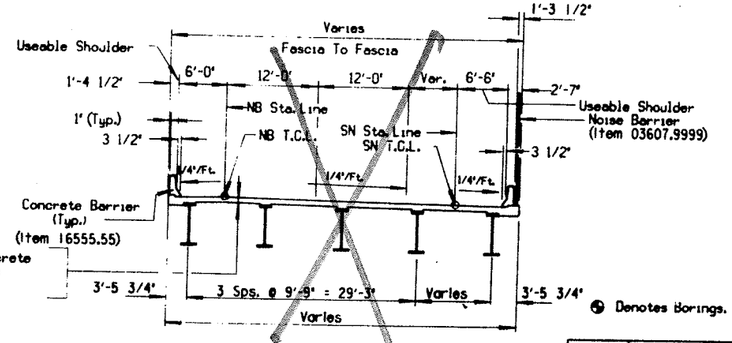

Typical Bridge Section

Northbound I-481 (Bridge #8)

B.I.N. 1072782

Scale: 1"=10'-0"

LOAD RATINGS

	LOADING	INVENTORY	OPERATING
BRIDGE NO. 8	HS	HS 23 (41 T) W.S.	HS 43 (78 T) W.S.
BRIDGE NO. 9	HS	HS 23 (41 T) W.S.	HS 44 (80T) W.S.

Opalka 3/30
Gary W. Lee 3/30
BSO 4/1/04
Gary W. Lee 4/1/04
Opalka 5/13/08
PJR 5/11/10
DJHann 5/19

STATE OF NEW YORK
DEPARTMENT OF TRANSPORTATION

Bridges 8 & 9-N.B. & S.B.
Over Totman Rd.

PROJ. ENG. W.J.WINKLER	DATE Dec./82
SQUAD D.J. ROY	DRAWING NO. 1 OF 36

ESTIMATE CHECKED BY

ESTIMATED BY

DETAIL CHECKED BY

DETAILED BY

DESIGN CHECKED BY

DESIGNED BY

D250416

MUN. NO. RES. NO.	STATE	SECTION AND SUBSECTION NO.	SHEET NO.	TOTAL SHEETS
	NEW YORK	[illegible]	268	380

INTERSTATE RTE. 490 EXTENSION (I-490)
NORTHERN BLVD. TO PEARL ROAD INTERCHANGE
ONONDAGA COUNTY

CAPITAL PROJECT IDENTIFICATION NO. 3107.00

Noise barrier wall shall be installed along the south side of this bridge. For Li... ...ier Wall see Dwg No 7.

Deck Forms Certain Notes:
The Contractor's attention is directed to the provisions of Item 15555.04 which allow the option of three deck forming systems.

TRANSVERSE SECTION (Looking Up - Station)
Scale: = 1/2" = 1'-0"

* Stagger splices so that not more than 50% of the bars are spliced at any location.

Item 16555.55

See Detail "B"

3-5SE bars Spaced as Shown

5SE2 Spaced as Shown

RIGHT FASCIA

5SE10 @ 5 3/4

5SE11 5 3/4

Joint at Slab Concrete (Optional Forming Systems Item 15555.04)

Stud Shear Connectors for Bridges - Item 556.03

5SE4 @ 5 3/4

5S3 @ 5 3/4

3-5S1 Spaced as Shown

L 4 x 4 x 3/8

Δ 3 x 3 x 3/8

7'-3" c.to c. Brg

3/16 R (Typ)

3/16 Min Radius (Typ)

Sloped

WT 15 x 49.5

3/16 Brg Shift R.

1" Nominal Clearance (Typ)

D2 D3 D1

3'-5 3/4"

4 Spaces @ 9'-3" = 37'-0"

Pay Limit for Item 15555.04

1" cov

4 1/2 cov

3/4" Min

1'-7" Lap

1/2 clr

5S.B. Sta. Line

5SE5 @ 5 3/8

5SE8 @ 11 1/2

S.B. T.G.L.

6SE9 @ 11 1/2

1/4" Fit

6'-0" Useable Shoulder

5'-8 1/2"

1'-4 1/2"

1'-7"

1"

2 1/2"

3 1/2"

Item 16555.55

See Detail "A"

6-5SE bars Spaced as Shown

3-5SE2 Spaced as Shown

LEFT FASCIA

3-5S1 Spaced as Shown

1'-0" 1'-3 1/2" 7 Spaces @ 8" = 4'-8" 1'-3 1/2" 1'-0"

Typical Spacing Pattern each Bay

Note: Diaphragm not shown

Right Fascia 3'-7 5/8"

This side LEFT

If this is wider, is it out-out or out-in?

DETAIL "A"
Scale: 1" = 1'-0"

Useable Shoulder

1'-7"

3 1/2" 5 3/8" 9 1/8"

7" 2" 1" 1"

1/2 Wash

2'-10"

1'-9"

1'-1"

1'-0"

6"

3 1/2"

6-5E bars

2" Cov.

5SE8 @ 11 1/2"

1"

4 1/2"

1'-0"

2'-6 1/2"

1'-2"

2" Cov.

5SE5 @ 5 3/8"

6SE9 @ 11 1/2"

5S3 @ 5 3/8"

3-5S1 Spaced as Shown

3-5SE2 Spaced as Shown

End of Slab

7 7/8"

109'-11 7/8"

108'-0"

220 - 5SE10 @ (Lap to 5S3) (into Barrier)

1-5SE2 (Bottom)

220 - 5SE11 (Lap to 5S3) (into Barrier)

216 - 5SE5 @ 5 3/8" (Top)

1'-3 1/2"

1'-0"

10 5/16"

2-5S6 (Between Girders)

9-5S7 @ 10 1/2" (Haunch Girder) (Top)

Skew A 16°-26'-24"

S.B. Sta. 422+65.00

S.B. Sta. Line of T.G.L.

43'-11 1/2"

36'-7"

7'-4 1/2"

34-5SE2 Spaced as Shown (Top)

46-5S1 Spaced as Shown (Bottom)

216 - 5SE4 @ 5 3/8" (Top)

220 - 5S3 @ 5 3/8" (Bottom)

3-5S7 @ 10 1/2" (Haunch Girder) (Top)

2-5S6 (Between Girders)

S.B. Sta. 423+73.00

1'-7 Min Lap

111 - 6SE9 @ 11 1/2" (into Barrier) (Lap to 5S3)

5 Brgs.

"5E bars Spaced as Shown in Details "A" and "B"

111 - 5SE8 @ 11 1/2" (into Barrier)

ITEM 16555.55 - PERMANENT CONCRETE TRAFFIC BARRIER FOR STRUCTURES (SAFETY SHAPE - HALF SECTION) (SOUTH BARRIER SIMILAR)

SLAB REINFORCEMENT PLAN
Scale: 1/2" = 1'-0"

DETAIL "B"
Scale 1" = 1'-0"

6-5SE2 Spaced as Shown

Notes,
For Safety Handrail Details see Dwg No. 5 of Common Structure Details
For End of Slab Haunch Detail, Traffic Barrier Chamfer Detail and Concrete Table see Dwg. No. 28.
For Location of Diaphragms see Dwg No. 28.
For Girder Details see Dwg. No. 27.
For Diaphragm Notes see Dwg. No. 33.

STATE OF NEW YORK
DEPARTMENT OF TRANSPORTATION
STRUCTURES DESIGN AND CONSTRUCTION DIVISION

BRIDGE NO. 3 OVER TOTMAN RD.

TRANSVERSE SECTION AND SLAB BAR LAYOUT

DRG. [illegible] SQUAD T. ROAD DRAWING NO. 27 OF 35

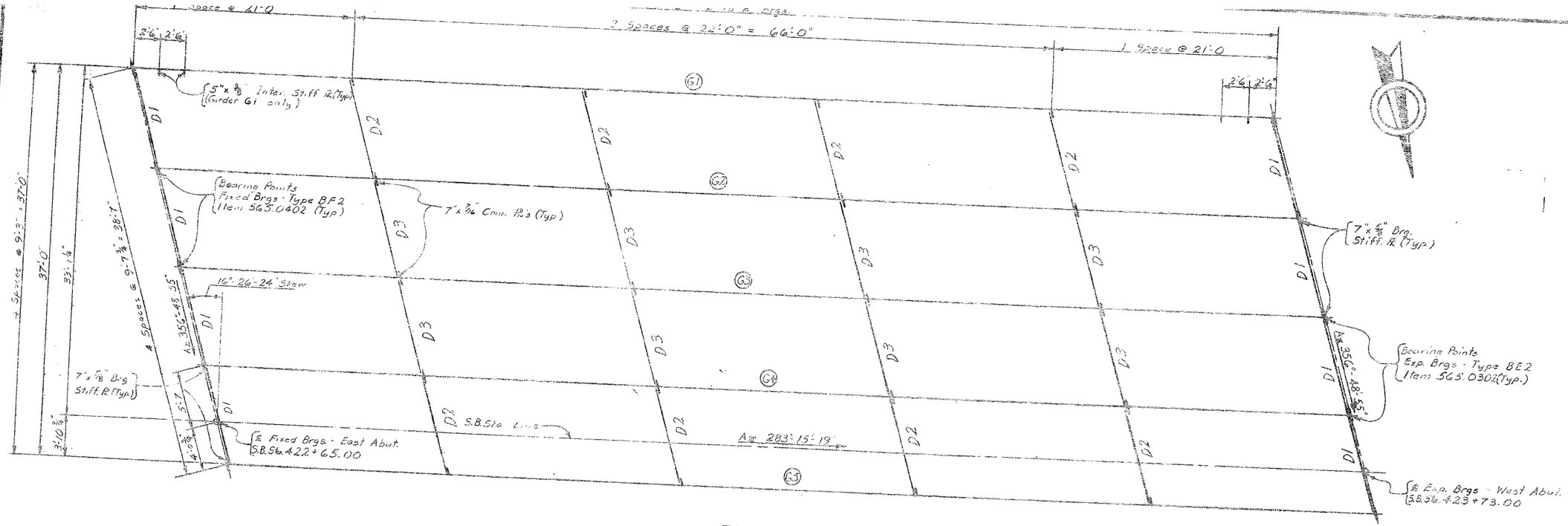

FRAMING PLAN
Scale: 3/16" 1'-0"

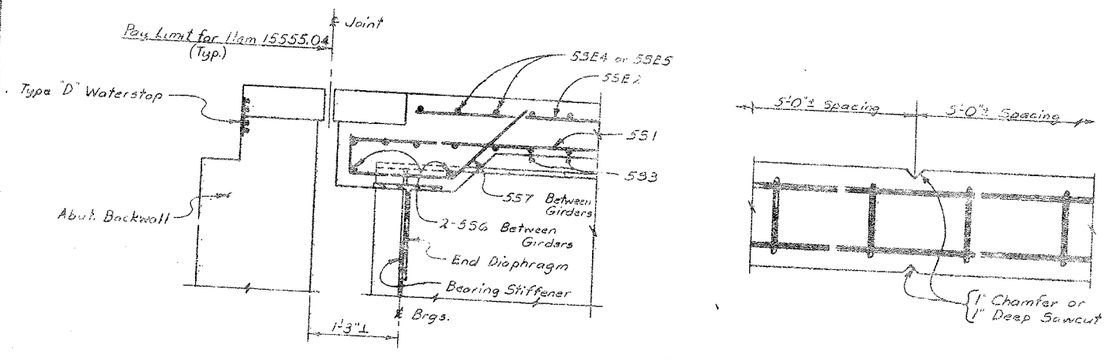

END OF SLAB HAUNCH DETAIL
Scale: 1"=1'-0"

TRAFFIC BARRIER CHAMFER DETAIL
Not to Scale

CONCRETE TABLE		
LOCATION	Struct. Slab Conc. Item 15555.04	Traffic Barrier Item 15555.55
Struct. Slab	4848 S.F.	———
No. Traffic Barrier	———	111 L.F.
So. Traffic Barrier	———	111 L.F.

NOTES FOR DIAPHRAGM DETAILS

1. Where holes are indicated, connections shall be 7/8" diameter high-strength bolts.
2. Cross frames may be fabricated to fit the girders in their erected position and cambered shape, but deflected vertically under the de load of the steel work only.
3. The Contractor may place diaphragms on either side of the bearing stiffeners or stiffener connection plates as necessary to correct alignment provided there will be no inteference with other structural details
4. Snipe the outstanding leg of all angles and plates 1" minimum.
5. Tapered or flat shim plates may be used in the connection between skewed diaphragms and the bearing stiffeners or stiffener connectio plates. Variable thicknesses of shim plates may be used. The mini mum thickness of shim plate shall be 1/8" with a maximum number of shim plates permitted at any connection. The total thickness of al shim plates used at any connection shall not exceed 1". Shim plate shall have the dimensions of the faying surface. The shim material shall conform to ASTM Designation A36, except that on unpainted structures, the shim material shall conform to ASTM Designation A58 No additional payment will be made for furnishing and placing the shim plates.

Notes,
For Girder Details see Dwg. No. 29
For details of diaphragms D1, D2 and D Transverse Section on Dwg. No. 27.
For Bearing Details see Dwg. No. 3 Common Structure Details.

STRUCTURAL SLAB REINFORCEMENT

MARK	SIZE	No.	TYPE	LENGTH	A	B	C	D	E	F	G	H	J	K	L	R	S
551	5	92	Str.	55-8													
5SE2	5	72	Str.	52-7													
553	5	220	Str.	45-6													
5SE4	5	216	1	38-7	0-7	38-0											
5SE5	5	216	1	9-8	0-7	9-1											
556	5	16	Str.	7-11							0		0-5				
557	5	73	15	2-9							0		0-5				
5SE8	5	111	2	6-0				1-2				0-4	0-10		0-10		1-2
5SE9	6	111	15	4-9		2-2	0-9	3-1	0	0-3	0		0	2-2		0-3	
5SE10	5	220	14	8-9	3-4	0-9	3-4	1-3	0-8	0-5		0	1-4		3-2		3-6
5SE11	5	220	15	4-6				1-0				0	1-4		3-2		3-6

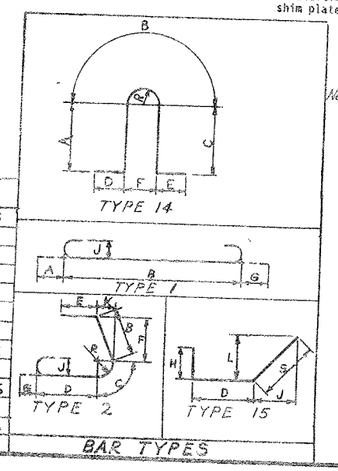

BAR TYPES

STATE OF NEW YORK
DEPARTMENT OF TRANSPORTATION
DIVISION OF CONSTRUCTION

BRIDGE NO. 9 OVER TOTMAN RD

FRAMING PLAN AND SLAB DETA

DRAWING NO. 28 OF

FED ROAD REG. NO.	STATE	CONTRACT NO.	SHEET NO.	TOTAL SHEETS
1	N.Y.	D259214	260	432

BRIDGE REHABILITATION PROJECT (ELEMENT SPECIFIC)
VARIOUS BRIDGES ON INTERSTATE 481
TOWNS OF DEWITT AND CICERO
ONONDAGA COUNTY
P.I.N. 305613 | B.I.N. 1072781 & 1072782

DRAFTED BY ____ CHECKED BY ____
ESTIMATED BY ____ DESIGNED BY ____
JOB MANAGER ____
DESIGN SUPERVISOR ____

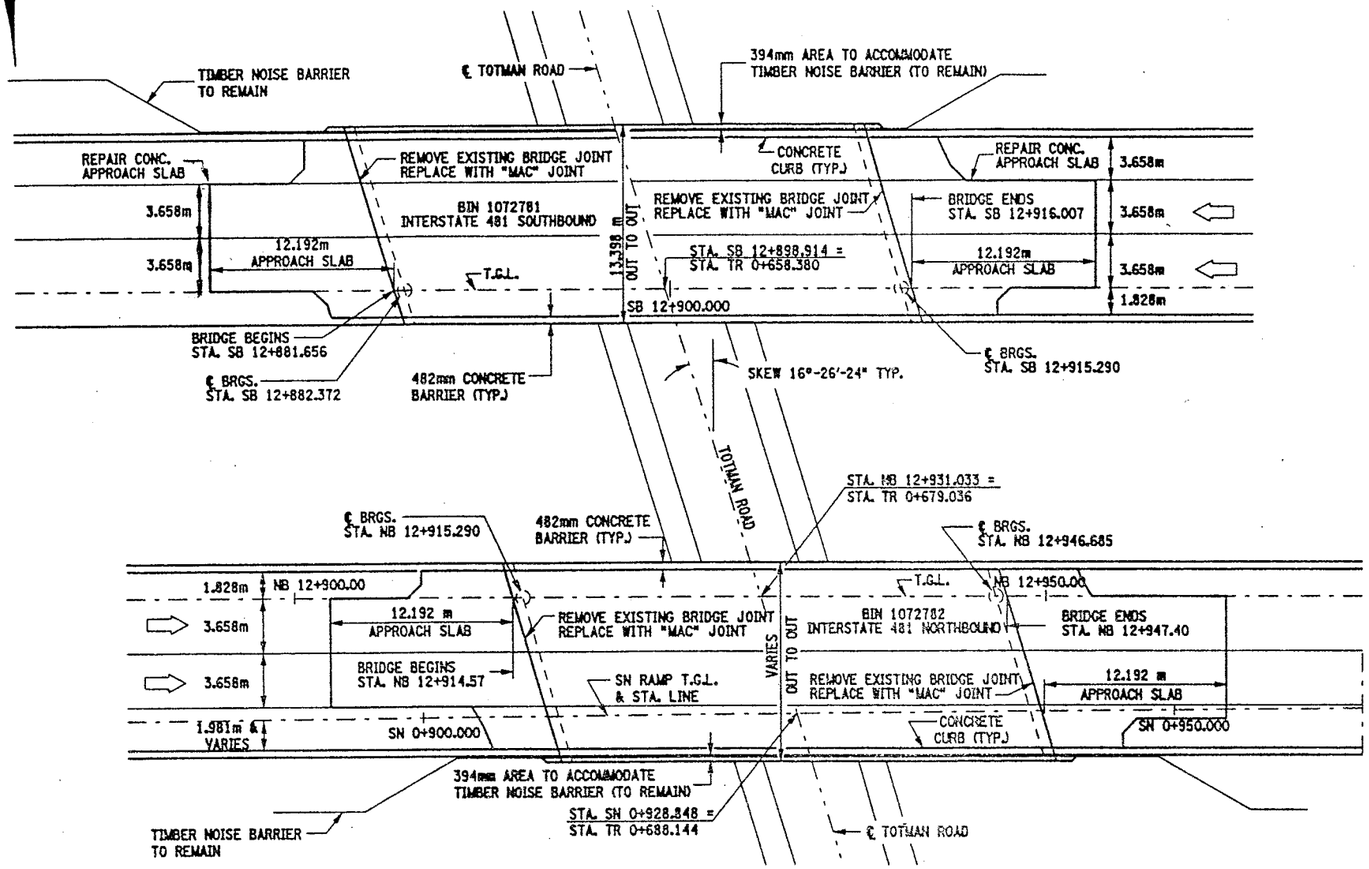

PLAN VIEW
SCALE: 1:200

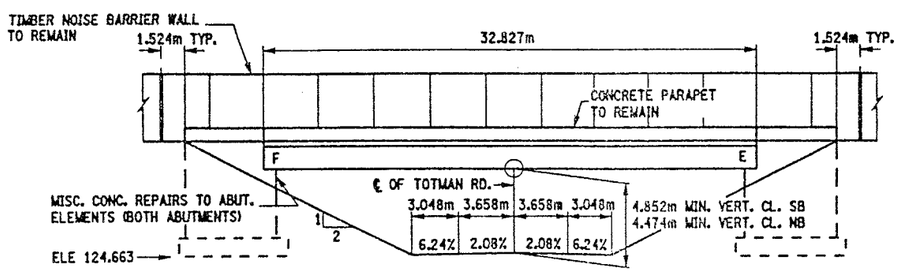

ELEVATION
SCALE: 1:200

NB SHOWN, SB SIMILAR

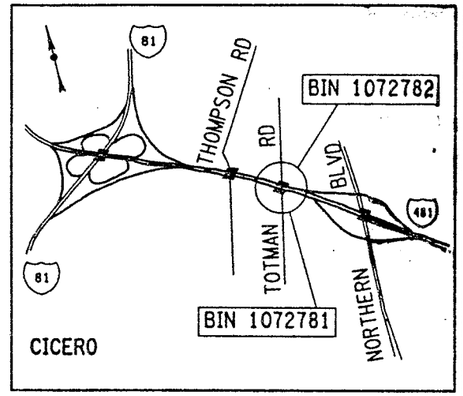

LOCATION MAP
NOT TO SCALE

WORK TO BE DONE (NOT NECESSARILY IN THIS ORDER):

BIN 1072781:

1. ESTABLISH MP&T SCHEME FOR STAGE CONSTRUCTION.
2. REPAIR CONCRETE APPROACH SLAB.
3. REMOVE EXISITING BRIDGE JOINTS.
4. PLACE NEW BRIDGE JOINTS, ("MAC" JOINTS).
5. PERFORM MISCELLANEOUS REPAIRS TO CONCRETE ELEMENTS AT ABUTMENTS.

BIN 1072782:

1. ESTABLISH MP&T SCHEME FOR STAGE CONSTRUCTION.
2. REMOVE EXISITING BRIDGE JOINTS.
3. PLACE NEW BRIDGE JOINTS, ("MAC" JOINTS).
4. PERFORM MISCELLANEOUS REPAIRS TO CONCRETE ELEMENTS AT ABUTMENTS.

NOTE:

"MAC" JOINT - MODIFIED ARMORED JOINT SYSTEM WITH COMPRESSION SEAL.

BIN 1072781 SOUTHBOUND
BIN 1072782 NORTHBOUND

ALL DIMENSIONS ARE IN m UNLESS OTHERWISE NOTED

AS BUILT REVISIONS

SIGNATURE ____ DATE ____

INTERSTATE 481
OVER
TOTMAN ROAD

PLAN, ELEVATION AND BRIDGE SECTION

STATE OF NEW YORK
DEPARTMENT OF TRANSPORTATION

FILENAME	REGION	DATE	DRAWING NO.
305613AB.G1A	3	10/02	GP10-1

FED ROAD REG. NO.	STATE	CONTRACT NO.	SHEET NO.	TOTAL SHEETS
1	N.Y.	D259214	264	432

BRIDGE REHABILITATION PROJECT (ELEMENT SPECIFIC)

VARIOUS BRIDGES ON INTERSTATE 481

TOWNS OF DEWITT AND CICERO

ONONDAGA COUNTY

P.I.N. 305613 | B.I.N. 1072782

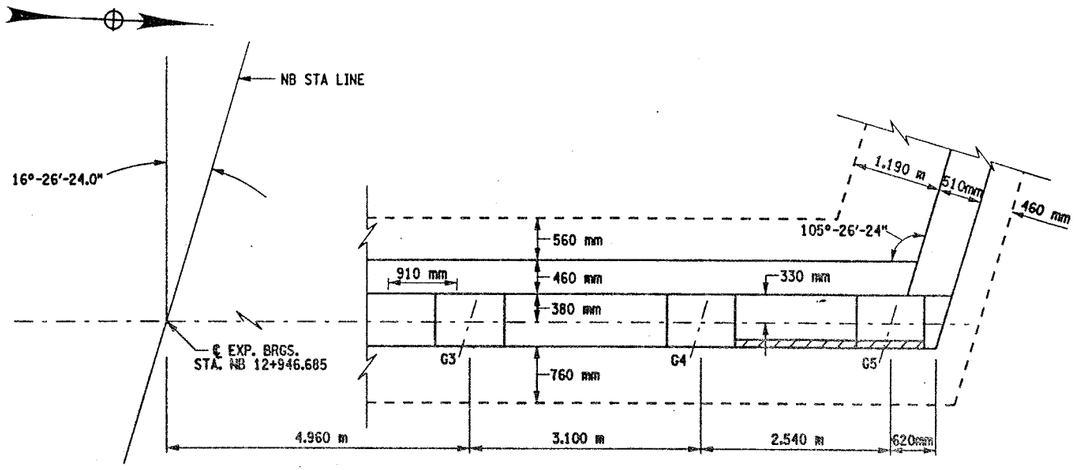

WEST ABUTMENT
PARTIAL PLAN
SCALE 1:40

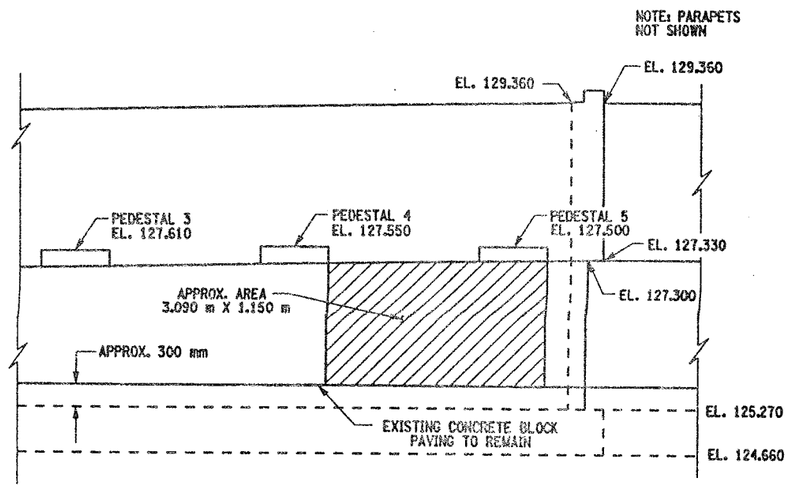

WEST ABUTMENT
PARTIAL ELEVATION
SCALE 1:40

NOTES:

1. ALL DIMENSIONS SHOWN FOR CONCRETE REMOVAL ARE APPROXIMATE AND SHALL BE FIELD VERIFIED BY THE CONTRACTOR AND EIC.
2. REMOVE CONCRETE TO LIMITS SHOWN AS WELL AS TO SOUND CONCRETE, A.O.B.E.
3. WHEN REMOVING EXISTING CONCRETE, SAWCUT 5 mm MIN. TO PRODUCE NEAT REMOVAL LINES. ANY COST TO BE INCLUDED IN THE BID PRICE FOR ITEM 582.05M.
4. ALL EXISTING REINFORCEMENT TO REMAIN.
5. ELEVATIONS ARE GIVEN FOR QUANTITY ESTIMATES ONLY.
6. REFER TO CONTRACT D250416 FOR ORIGINAL CONSTRUCTION DETAILS.
7. FOR REMOVAL DETAILS SEE DWG. AB10-2.

AREAS OF PROPOSED WORK: ITEM 582.05M REMOVAL OF STRUCTURAL CONCRETE- REPLACEMENT WITH CLASS A CONCRETE

LIST OF ITEMS USED:

ITEM 582.05M - REMOVAL OF STRUCTURAL CONCRETE - REPLACEMENT WITH CLASS A CONCRETE.

ALL DIMENSIONS ARE IN m UNLESS OTHERWISE NOTED

AS BUILT REVISIONS

SIGNATURE DATE

INTERSTATE 481 NB
OVER
TOTMAN ROAD
WEST ABUTMENT

STATE OF NEW YORK
DEPARTMENT OF TRANSPORTATION

FILENAME	REGION	DATE	DRAWING NO.
305613AB.A1B	3	10/02	AB10-3

DESIGN SUPERVISOR ____ JOB MANAGER ____ DESIGNED BY ____ ESTIMATED BY ____ DRAFTED BY ____ CHECKED BY ____ CHECKED BY

FED ROAD REG. NO.	STATE	CONTRACT NO.	SHEET NO.	TOTAL SHEETS
1	N.Y.	D259214	362	432
BRIDGE REHABILITATION PROJECT (ELEMENT SPECIFIC)				
VARIOUS BRIDGES ON INTERSTATE 481				
TOWNS OF DEWITT AND CICERO				
ONONDAGA COUNTY				
P.I.N. 305613		B.I.N. ALL BINS		

BRIDGE JOINT TABLE

B.I.N. NUMBER	JOINT LOCATION	JOINT SKEW	SPAN(S) LENGTH FOR JOINT (METERS)	JOINT BEND LOCAT'N RT	JOINT BEND LOCAT'N LT	EXISTING JOINT TYPE	PROPOSED JOINT TYPE	CURB TO CURB DISTANCE (METERS) (SEE NOTES)	FASCIA & MEDIAN LENGTH (METERS) LT/RT	TOTAL LENGTH (METERS)	JOINT ITEM NUMBER(S)	DRAWING NUMBER SECT VIEW	DRAWING NUMBER PLAN VIEW	DRAWING NUMBER FASCIA DETAIL
1072530	EAST ABUT.	0°-00'-00"	33.528	N	N	ACJ	MAC-5	15.850	.457/.457	16.764	567.35M	JD-30	JD-29	JD-30
	WEST ABUT.	0°-00'-00"	37.795	N	N	ACJ	MAC-5	15.850	.457/.457	16.764	567.35M	JD-30	JD-29	JD-30
1072571	SOUTH ABUT.	20°-29'-45.2"	44.196	N	N	ACJ	MAC-6	14.481	.488/.488	15.457	567.36M	JD-32	JD-31	JD-32
	NORTH ABUT.	20°-29'-45.2"	———	N	N	ACJ	MAC-1	15.456	.488/.488	16.428	567.31M	JD-32	JD-31	JD-32
1072572	SOUTH ABUT.	21°-09'-2.1"	44.196	N	N	ACJ	MAC-6	12.746	.490/.490	13.726	567.36M	JD-34	JD-33	JD-34
	NORTH ABUT.	21°-09'-2.1"	———	N	N	ACJ	MAC-1	12.746	.490/.490	13.726	567.31M	JD-34	JD-33	JD-34
1072581	SOUTH ABUT.	3°59'-27.5"	37.033	N	N	ACJ	MAC-5	11.917	.458/.458	12.833	567.35M	JD-36	JD-35	JD-36
	NORTH ABUT.	3°-59'-27.5"	———	N	N	ACJ	MAC-1	11.917	.458/.458	12.833	567.31M	JD-36	JD-35	JD-36
1072582	SOUTH ABUT.	3°-51'-57.9"	37.033	N	N	ACJ	MAC-5	11.915	.458/.458	12.831	567.35M	JD-38	JD-37	JD-38
	NORTH ABUT.	3°-51'-57.9"	———	N	N	ACJ	MAC-1	11.915	.458/.458	12.831	567.31M	JD-38	JD-37	JD-38
1072781	EAST ABUT.	16°-26'-24"	———	N	N	ACJ	MAC-1	12.500	.530/.530	13.560	567.31M	JD-40	JD-39	JD-40
	WEST ABUT.	16°-26'-24"	33.635	N	N	ACJ	MAC-5	12.500	.530/.530	13.560	567.35M	JD-40	JD-39	JD-40
1072782	EAST ABUT.	16°-26'-24"	———	N	N	ACJ	MAC-1	13.183	.530/.530	14.243	567.31M	JD-42	JD-41	JD-42
	WEST ABUT.	16°-26'-24"	31.394	N	N	ACJ	MAC-5	12.589	.530/.530	13.649	567.35M	JD-42	JD-41	JD-42
1072791	EAST ABUT.	17°-02'-59.4"	30.785	N	N	ACJ	RCS	12.566	.531/.531	13.628	16567.64M	JD-47	JD-43	JD-47
	WEST ABUT.	17°-02'-59.4"	———	N	N	ACJ	RCS	12.566	.531/.531	13.628	16567.64M	JD-47	JD-43	JD-47
1072792	EAST ABUT.	17°-02'-59.4"	30.785	N	N	ACJ	MAC-5	12.566	.530/.530	14.015	567.35M	JD-44	JD-43	JD-44
	WEST ABUT.	17°-02'-59.4"	———	N	N	ACJ	MAC-1	12.566	.530/.530	14.015	567.31M	JD-44	JD-43	JD-44
1093510	WEST ABUT.	44°-07'-00"	———	N	N	ACJ/ADA	RCS	16.560	.637/.637	17.834	16567.64M	JD-46	JD-45	JD-46
	EAST ABUT.	40°-26'-00"	37.522	N	N	ADA	RADA	15.620	———	15.620	———	JD-46	JD-45	———

LEGEND

EXISTING JOINT TYPE:

ACJ = ARMORED COMPRESSION JOINT SYSTEM
MOD = MODULAR JOINT SYSTEM
MAC = MODIFIED ARMORED COMPRESSION SYSTEM (NO HORIZ. ARMORING ANGLE)
ADA = ARMORED DECK ANGLE
SS = STRIP SEAL JOINT
OPEN = OPEN JOINT

PROPOSED JOINT TYPE:

MAC-1 = MOD. ARM./COMP. SEAL JT. SYS. (A-1)
MAC-2 = MOD. ARM./COMP. SEAL JT. SYS. (A-2)
MAC-5 = MOD. ARM./COMP. SEAL JT. SYS. (A-5)
MAC-6 = MOD. ARM./COMP. SEAL JT. SYS. (A-6)
RCS = REPLACE EXISTING COMPRESSION SEAL
RADA = REMOVE ARMOR DECK ANGLE
MOD-1 = MODULAR JT. SYS. (ONE-CELL)
MOD-2 = MODULAR JT. SYS. (TWO-CELL)

JOINT BEND LOCATION:

N = NO BENDS
CRB = CURB LINE
PAV'T = PAVEMENT

GENERAL NOTES:

- ALL MEASUREMENTS SHALL BE FIELD VERIFIED.
- CURB TO CURB LENGTHS ARE MEASURED ALONG ℄ OF JOINT.
- MULTIPLE DIMENSIONS ARE SHOWN LOOKING UP-STATION, LEFT TO RIGHT.
- ALL DIMENSIONS ARE SHOWN IN METERS.

INFORMATIONAL NOTES:

BIN 1072530 - NO JOINT AT PIER.

BIN 1072791 - REPLACE COMPRESSION SEALS
BEG. ABUT. (EAST), TYPE A-5
END ABUT. (WEST), TYPE A-1

FOR JOINT DETAILS REFER TO THE FOLLOWING DRAWINGS:

DWG. NO. JD-1 - MODIFIED ARMORED COMPRESSION SEAL JOINT SYSTEM.
DWG. NO. JD-24 - ONE-CELL MODULAR JOINT SYSTEM.
DWG. NO. JD-25 - TWO-CELL MODULAR JOINT SYSTEM.

LIST OF BRIDGE JOINT ITEMS USED:

ITEM 566.01M - MODULAR EXP. JOINT SYSTEM ONE-CELL (M)
ITEM 566.02M - MODULAR EXP. JOINT SYSTEM TWO-CELL (M)
ITEM 567.31M - MODIFIED ARMORED JOINT SYSTEM W/ COMP. SEAL TYPE A1 (m)
ITEM 567.32M - MODIFIED ARMORED JOINT SYSTEM W/ COMP. SEAL TYPE A2 (m)
ITEM 567.35M - MODIFIED ARMORED JOINT SYSTEM W/ COMP. SEAL TYPE A5 (m)
ITEM 567.36M - MODIFIED ARMORED JOINT SYSTEM W/ COMP. SEAL TYPE A6 (m)
ITEM 16567.640001M - REPLACE COMPRESSION SEAL FOR EXISTING BRDGE JOINTS (m)

ALL DIMENSIONS ARE IN m UNLESS OTHERWISE NOTED

AS BUILT REVISIONS

SIGNATURE DATE

INTERSTATE 481 VARIOUS BRIDGES

BRIDGE JOINT TABLE

STATE OF NEW YORK
DEPARTMENT OF TRANSPORTATION

FILENAME	REGION	DATE	DRAWING NO.
305613AJJA1	3	10/02	JT-2

CHECKED BY
DRAFTED BY
ESTIMATED BY
DESIGNED BY
JOB MANAGER
DESIGN SUPERVISOR

FED ROAD REG. NO.	STATE	CONTRACT NO.	SHEET NO.	TOTAL SHEETS
1	N.Y.	D259214	365	432

BRIDGE REHABILITATION PROJECT (ELEMENT SPECIFIC)

VARIOUS BRIDGES ON INTERSTATE 481

TOWNS OF DEWITT AND CICERO

ONONDAGA COUNTY

P.I.N. 305613 | B.I.N. ALL BIN'S

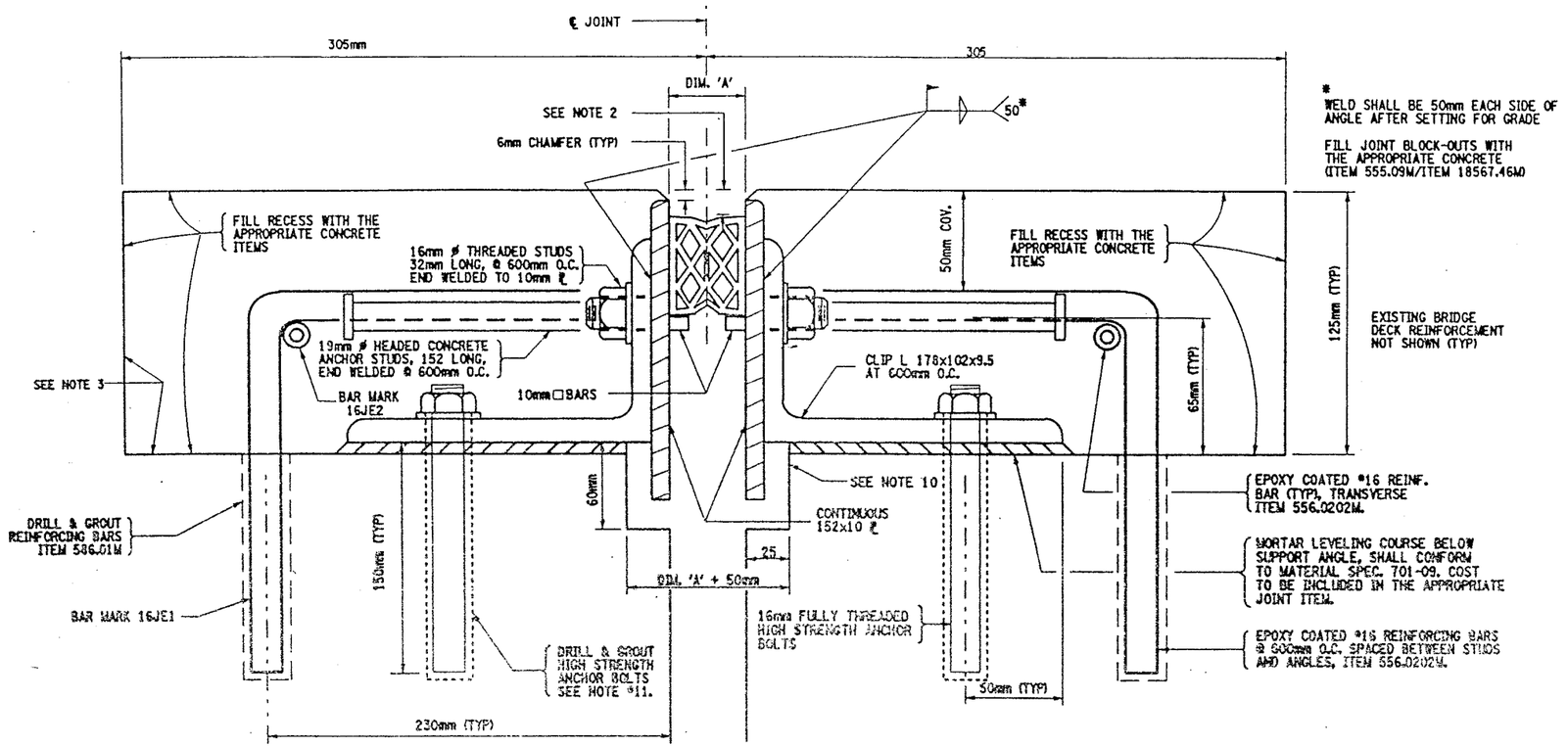

* WELD SHALL BE 50mm EACH SIDE OF ANGLE AFTER SETTING FOR GRADE

FILL JOINT BLOCK-OUTS WITH THE APPROPRIATE CONCRETE (ITEM 555.09M/ITEM 18567.46M)

MODIFIED ARMORED COMPRESSION JOINT DETAIL

FOR INSTALLATION LOCATIONS SEE JOINT TABLE

NOT TO SCALE

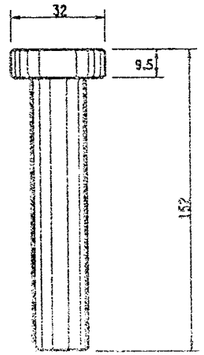

DETAIL OF HEADED CONCRETE ANCHOR STUD

NOT TO SCALE

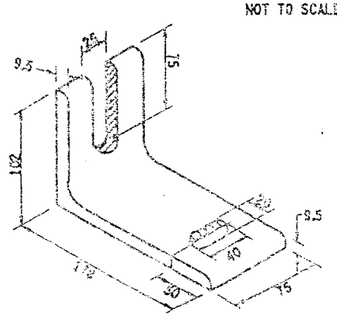

DETAIL OF CLIP ANGLE

NOT TO SCALE

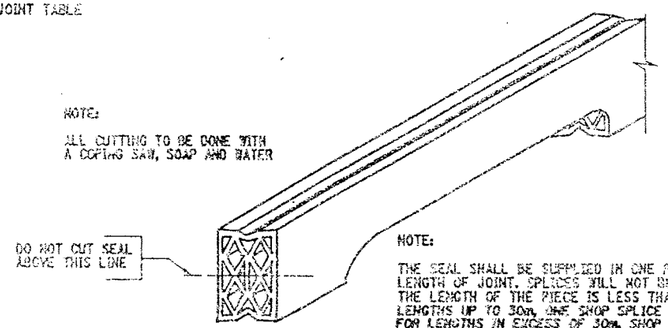

DETAIL FOR CUTTING SEAL

NOT TO SCALE

GENERAL NOTES:

1. THE TEMPERATURE OF THE BRIDGE MUST BE TAKEN ON THE STRUCTURAL STEEL SURFACE TO DETERMINE THE TEMPERATURE CORRECTION FOR THE JOINT OPENINGS.
2. THIS DEPTH SHALL BE INDICATED ON THE SHOP DRAWINGS AND SHALL BE SUCH THAT WHEN THE SEAL IS COMPRESSED TO 50% OF ITS NORMAL WIDTH, THE TOP OF THE SEAL SHALL BE NOT LESS THAN 6mm NOR MORE THAN 19mm BELOW THE TOP OF THE ROADWAY.
3. RECESSES RECEIVING ITEM 555.09M, AFTER SURFACE PREPARATION, THOROUGHLY WET THE CONCRETE SURFACE AND ALL POROUS SURFACES TO BE IN CONTACT WITH NEW CONCRETE, FOR 12 HOURS. NOTE THE USE OF MATERIAL SPECIF. 705-22 PORTLAND CEMENT MORTAR BONDING GROUT HAS BEEN ELIMINATED, SEE INSERT IN PROJECT PROPOSAL.
4. A WATER-TIGHT INTEGRITY TEST SHALL BE PERFORMED BY THE CONTRACTOR AT ALL COMPRESSION SEAL JOINT INSTALLATIONS. THE FOLLOWING TEST PARAMETERS SHALL BE INCORPORATED IN THE TEST:
   1. A 15 MINUTE MINIMUM PERIOD OF STANDING WATER, WITH A 25mm MINIMUM DEPTH SHALL BE USED.
   2. IN ADDITION, IN LOCATIONS OF COPED AREAS OF THE SEAL, BENDS, ETC., WATER PRESSURE SHALL BE APPLIED, TO THE SATISFACTION OF THE E.I.C FOR A 15 MINUTE PERIOD.
   3. LIMITS OF TEST AREA SHALL BE FROM FACE OF CURB TO FACE OF CURB ON THE DECK SURFACE.
5. NO PAYMENT WILL BE MADE TO THE CONTRACTOR FOR THE JOINT IF, IN THE OPINION OF THE ENGINEER, THE INSTALLED JOINT LEAKS WITHIN THE 15 MINUTE TEST PERIOD.
6. PRIOR TO THE START OF WORK AT EACH JOINT, THE CONTRACTOR SHALL SUBMIT A WRITTEN PLAN FOR THE SPECIFICS OF THE TESTING, INCLUDING CONTAINMENT OF THE WATER AND THE METHOD TO BE USED FOR ACCESS BY THE E.I.C. TO THE BOTTOM OF THE JOINT BEING TESTED.
7. THE COST OF ALL LABOR, EQUIPMENT AND MATERIALS REQUIRED FOR THE TESTING WHICH INCLUDES, BUT IS NOT LIMITED TO:
   1. A CONTAINMENT SYSTEM FOR THE TEST WATER.
   2. PROVISIONS FOR E.I.C. ACCESS TO THE BOTTOM OF THE JOINT.

   SHALL BE INCLUDED IN THE PRICE BID FOR THE RESPECTIVE JOINT ITEMS.
8. THE COST OF ALL LABOR, EQUIPMENT, AND MATERIALS TO INSTALL THE NEW JOINT SHALL BE INCLUDED IN THE UNIT PRICE BID FOR THE APPROPRIATE JOINT ITEM.
9. MORTAR LEVELING COURSE SHALL CONFORM TO MATERIAL SPECIFICATION 701-09 AND SHALL BE INCLUDED IN THE PRICE BID FOR THE APPROPRIATE JOINT ITEM.
10. THE DIMENSIONS OF THE REMOVAL AREA UNDER THE 152x10 PLATES ARE SHOWN TO ALLOW SPACE FOR THE PLATES TO REST FREELY. IF THERE IS ALREADY ADEQUATE SPACE, NO CONCRETE REMOVAL OR REPLACEMENT IS REQUIRED IN THIS AREA.
11. 16 mm ⌀ ASTM A325M ANCHOR BOLT TO BE DRILLED AND GROUTED IN PLACE IN ACCORDANCE WITH THE REQUIREMENTS OF SUB-SECTION 586-3.02. GROUTING MATERIALS SHALL BE IN ACCORDANCE WITH MATERIALS SUB-SECTION 701-07 ANCHORING MATERIALS-CHEMICALLY CURING. HOLES TO BE DRILLED TO THE DIAMETER AND DEPTH RECOMMENDED BY THE MANUFACTURER OF THE GROUTING MATERIAL (MIN. DEPTH OF 150 mm). THE COST OF THE ANCHORS, INCLUDING DRILLING AND GROUTING, SHALL BE INCLUDED IN THE UNIT PRICE BID FOR THE APPROPRIATE JOINT SYSTEM ITEM.
12. IT IS DESIRABLE TO HAVE THE ARMORED JOINT WITH ITS COMPRESSION SEAL ASSEMBLED IN THE SHOP AND DELIVERED TO THE JOB SITE ALL SET FOR INSTALLATION IN ITS PREFORMED RECESS IN THE STRUCTURAL SLAB, IN CASES WHERE THE ARMORED JOINT CANNOT BE ASSEMBLED IN THE SHOP, DUE TO ITS EXCESSIVE LENGTH CAUSING SHIPPING PROBLEMS, THE JOINT SHALL BE SEALED WITH THE COMPRESSION SEAL BEFORE THE STRUCTURE IS OPENED TO TRAFFIC (INCLUDING CONSTRUCTION TRAFFIC), AND BEFORE DIS CONTINUING OPERATIONS WHEN WORK IS SUSPENDED DURING THE WINTER.

EPOXY POLYSULFIDE GROUT NOTE:

CONTRACTOR MAY WITH THE APPROVAL OF THE ENGINEER USE MATERIAL SPECIFICATION 721-03 EPOXY POLYSULFIDE GROUT, AT THE RECESSES. INSTEAD OF THE 12 HOUR CONTINUOUS PREWETTING REQUIREMENTS (PROJECT PROPOSAL). CONTRACTOR MUST ENSURE PROPER CONSTRUCTION PRACTICES ARE FOLLOWED WHEN USING THIS GROUT. THE USE OF EPOXY POLYSULFIDE GROUT SHALL BE AT NO ADDITIONAL COST TO THE STATE.

SEALS (mm)			ARMORED JOINT SYSTEM	
TYPE	NOMINAL WIDTH	DIM. "A" @ 20°C.	TYPE	END CONDITION
1	44	25	A1	Fixed End Only
2	51	30	A2	Exp. up to 18 m
3	64	38	A3	Exp. over 18 m to 23 m
4	76	44	A4	Exp. over 23 m to 27 m
5	89	52	A5	Exp. over 27 m to 38 m
6	102	60	A6	Exp. over 38 m to 46 m

Maximum Skew Limits: Fixed End - No Limit
Exp. End - 45° A2 thru A6

LIST OF ITEMS USED:

ITEM 555.09M - STRUCT. CONCRETE, CLASS "HP" (CM)
ITEM 556.0202M - EPOXY COATED BAR REINF. FOR STRUCT. (KG)
ITEM 567.31M - MOD. ARMORED JOINT SYSTEM W/ COMP. SEAL TYPE A1 (m)
ITEM 567.32M - MOD. ARMORED JOINT SYSTEM W/ COMP. SEAL TYPE A2 (m)
ITEM 567.35M - MOD. ARMORED JOINT SYSTEM W/ COMP. SEAL TYPE A5 (m)
ITEM 567.36M - MOD. ARMORED JOINT SYSTEM W/ COMP. SEAL TYPE A6 (m)
ITEM 18567.46M - ELASTOMERIC CONC. FOR BRIDGE JT. SYSTEMS (M)
ITEM 586.01M - DRILL & GROUT REINF. BARS (mm)

ALL DIMENSIONS ARE IN mm UNLESS OTHERWISE NOTED

AS BUILT REVISIONS

SIGNATURE DATE

INTERSTATE 481

COMPRESSION SEAL JOINT DETAILS

STATE OF NEW YORK
DEPARTMENT OF TRANSPORTATION

FILENAME	REGION	DATE	DRAWING NO.
305613AJJA1	3	10/02	JD-1

DESIGN SUPERVISOR ____ JOB MANAGER ____ DESIGNED BY ____ DRAFTED BY ____ ESTIMATED BY ____ CHECKED BY ____ CHECKED BY ____

BIN: 1072782
I481 NB / Totman Rd

DECK DETERIORATION PLAN

NOT TO SCALE

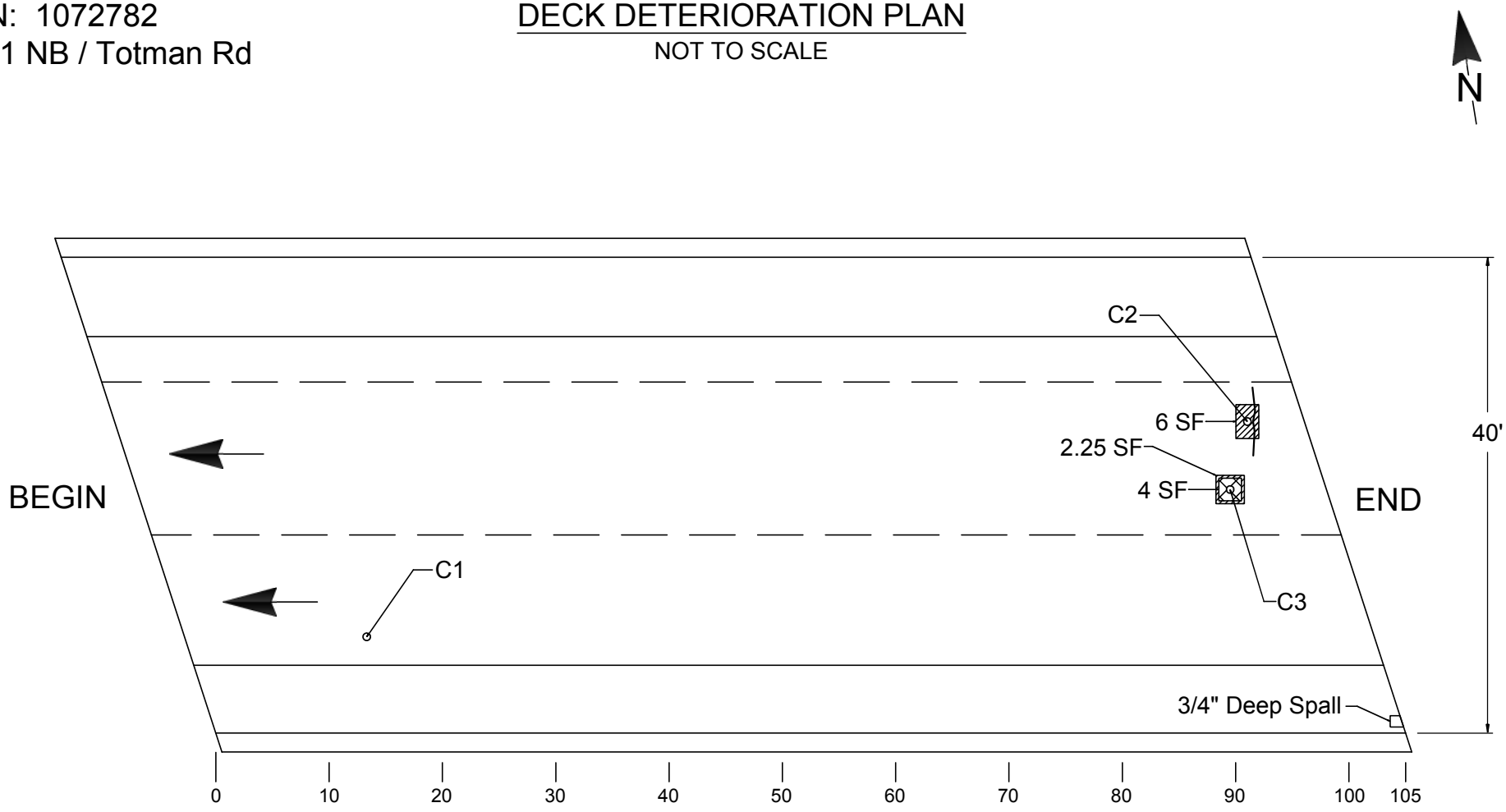

TOTAL DAMAGED AREA EQUALS 12.25 SF WHICH IS 0.3 % OF DECK SURFACE

LEGEND

- Hollow Concrete
- Patch
- Coring location
- Crack

BIN: 1072782
I-481 NB / Totman Rd.

BEGIN ABUTMENT DETERIORATION SKETCH

NOT TO SCALE

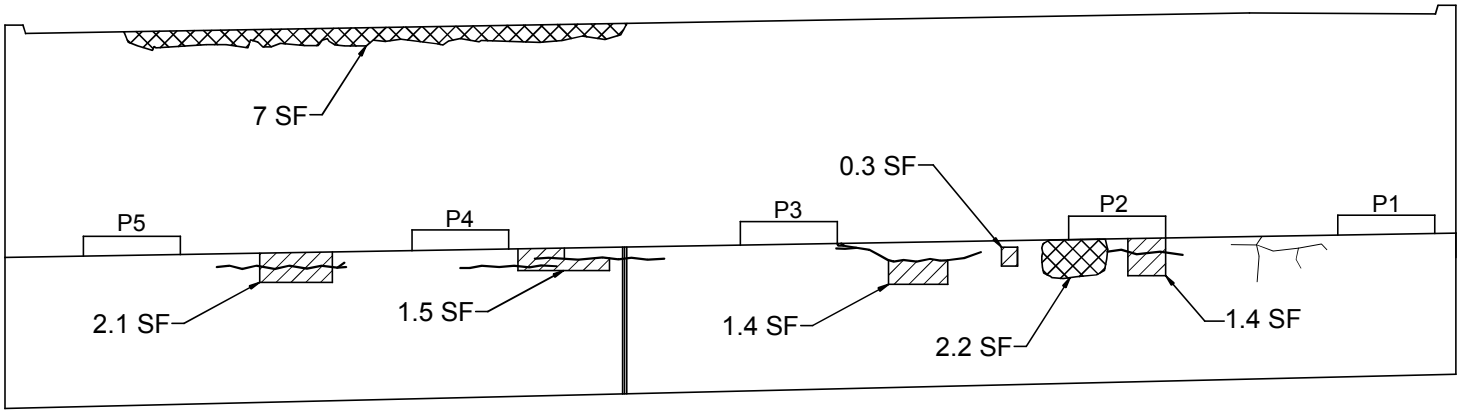

ELEVATION

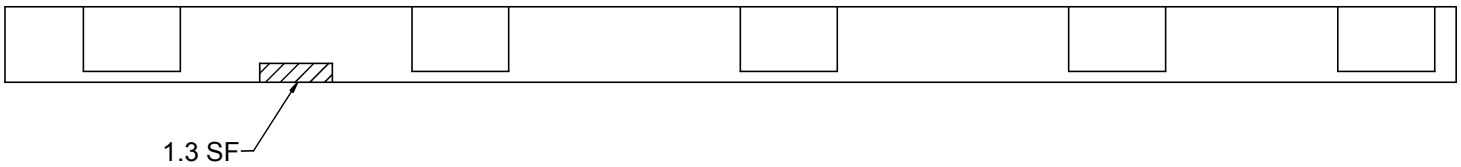

PLAN

LEGEND
Hollow Concrete
Spall
Crack
Hairline Crack

IN-DEPTH PHOTO DOCUMENTATION

BIN: 1072782
I481 NB / Totman Rd

IN-DEPTH INSPECTION
PHOTO LOCATION PLAN

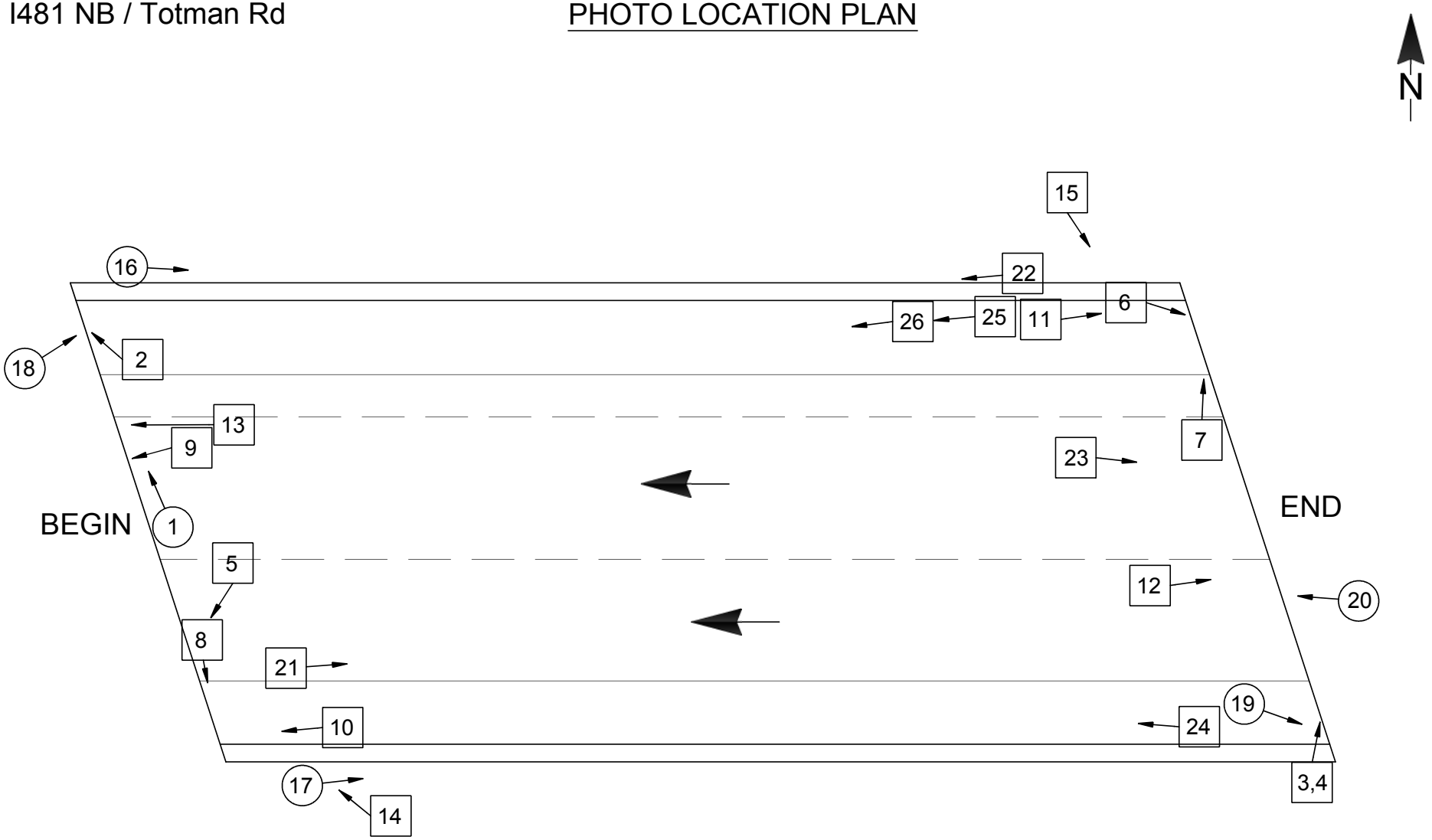

LEGEND

(XX) → Photo Above Deck

[XX] → Photo Below Deck



DESCRIPTION: BEGIN JOINT - LEFT LANE (R-L)

PHOTO 1



DESCRIPTION: BEGIN PEDESTAL 1 (R-L)

PHOTO 2



DESCRIPTION: END PEDESTAL 5

PHOTO 3



DESCRIPTION: END PEDESTAL & BEARING 5

PHOTO 4



DESCRIPTION: BEGIN STEM UNDER BAY 4

PHOTO 5



DESCRIPTION: END SEAT AND PEDESTAL 1

PHOTO 6



DESCRIPTION: END SEAT & STEM – BAY 1

PHOTO 7



DESCRIPTION: BEGIN BACKWALL – BAY 4 (L-R)

PHOTO 8



DESCRIPTION: BEGIN BACKWALL – BAY 2

PHOTO 9



DESCRIPTION: BEGIN BACKWALL AT RIGHT

PHOTO 10



DESCRIPTION: END BACKWALL AT LEFT

PHOTO 11



DESCRIPTION: END BACKWALL – BAY 3

PHOTO 12



DESCRIPTION: BEGIN ABUTMENT UNDER GIRDER 2

PHOTO 13



DESCRIPTION: BEGIN ABUTMENT

PHOTO 14



DESCRIPTION: END ABUTMENT

PHOTO 15



DESCRIPTION: LEFT FASCIA & PARAPET (B-E)

PHOTO 16



DESCRIPTION: RIGHT FASCIA & PARAPET (B-E)

PHOTO 17



DESCRIPTION: LEFT PARAPET AT BEGIN

PHOTO 18

In-Depth Inspection Photos

I-481 NB over Totman Rd., BIN 1072782



DESCRIPTION: DECK AT END RIGHT

PHOTO 19



DESCRIPTION: DECK FROM END

PHOTO 20

In-Depth Inspection Photos

I-481 NB over Totman Rd., BIN 1072782



DESCRIPTION: FRAMING FROM BEGIN

PHOTO 21



DESCRIPTION: LEFT OVERHANG (E-B)

PHOTO 22



DESCRIPTION: DECK NEAR END – BAY 2

PHOTO 23



DESCRIPTION: GIRDER 5 (E-B)

PHOTO 24



DESCRIPTION: GIRDER 1 WEB (E-B)

PHOTO 25



DESCRIPTION: GIRDER 1 FLANGE (E-B)

PHOTO 26

ASBESTOS SAMPLING SURVEY

Asbestos Sampling Survey

Location:

BIN 1072782
Interstate Route I-481 North Bound
over Totman Road

Prepared for:

New York State
Department of Transportation

PIN 3056.13.111

LaBella Project No. 201001

August 2001

Table of Contents

Page

I. Project Summary 1

II. Site Description 1

III. Inspection Procedures 1

IV. Results 2

Certification 2

Figures and Table

I. Project Summary

In accordance with conditions of Term Agreement D012606, LaBella Associates, P.C. conducted an asbestos sampling survey of the Interstate Route I-481 north bound bridge over Totman Road. Based on laboratory analyses of bulk samples collected, no asbestos-containing materials were identified.

II. Site Description

The Site is located in Onondaga County, New York. For the purpose of this report, the Site consists of the Interstate Route I-481 north bound bridge over Totman Road. (See attached FIGURE 1 - Site Location Map).

III. Inspection Procedures

The following procedures were used to obtain the data for this Report:

A. A review of record drawings supplied by Region 3 personnel and a visual inspection of the subject structure were conducted to identify potential visible/accessible sources of asbestos-containing materials. Observations and notes were made to provide a description of the structure, and an estimate of the approximate amount, length, or area of ACM present.

B. Physical or operational constraints, which might affect the removal of the ACM, were identified and reported.

C. Bulk samples of suspected ACM were collected during the site inspection of the subject structure. Samples were taken from each homogeneous area that may contain ACM.

D. Samples were submitted for analysis. Preliminary PLM analyses of NOB materials were performed by LaBella Laboratories, a NYSDOH approved laboratory, to determine the presence and percentage of asbestos in each sample. TEM analyses of NOB materials, if necessary, were performed by AMA Analytical, Inc.

E. Lab results were used to determine the approximate location, type, and amount of the verified ACM.

F. A drawing of the structure at the Site was created, in order to show sample locations and the approximate locations and amounts of confirmed ACM observed in accessible locations.

Only accessible areas were inspected. Inaccessible areas, such as areas within the bridge or the approaches to the bridge were not included in this inspection. No investigation was conducted by LaBella Associates to determine the presence of underground utilities on or in the immediate vicinity of the Site. Actual sample locations are shown in the attached FIGURE 2. Results of bulk sample analyses are tabulated in the attached TABLE.

IV. Results

BIN 1072782 Interstate Route I-481 North Bound over Totman Road

Based on laboratory analyses of bulk samples collected, no asbestos-containing materials were identified.

Certification

LaBella Associates, P.C. certifies the accuracy of this report, to the best of our knowledge, based on the information collected as described in the Inspection Procedures Section of this investigation.

Figures & Table

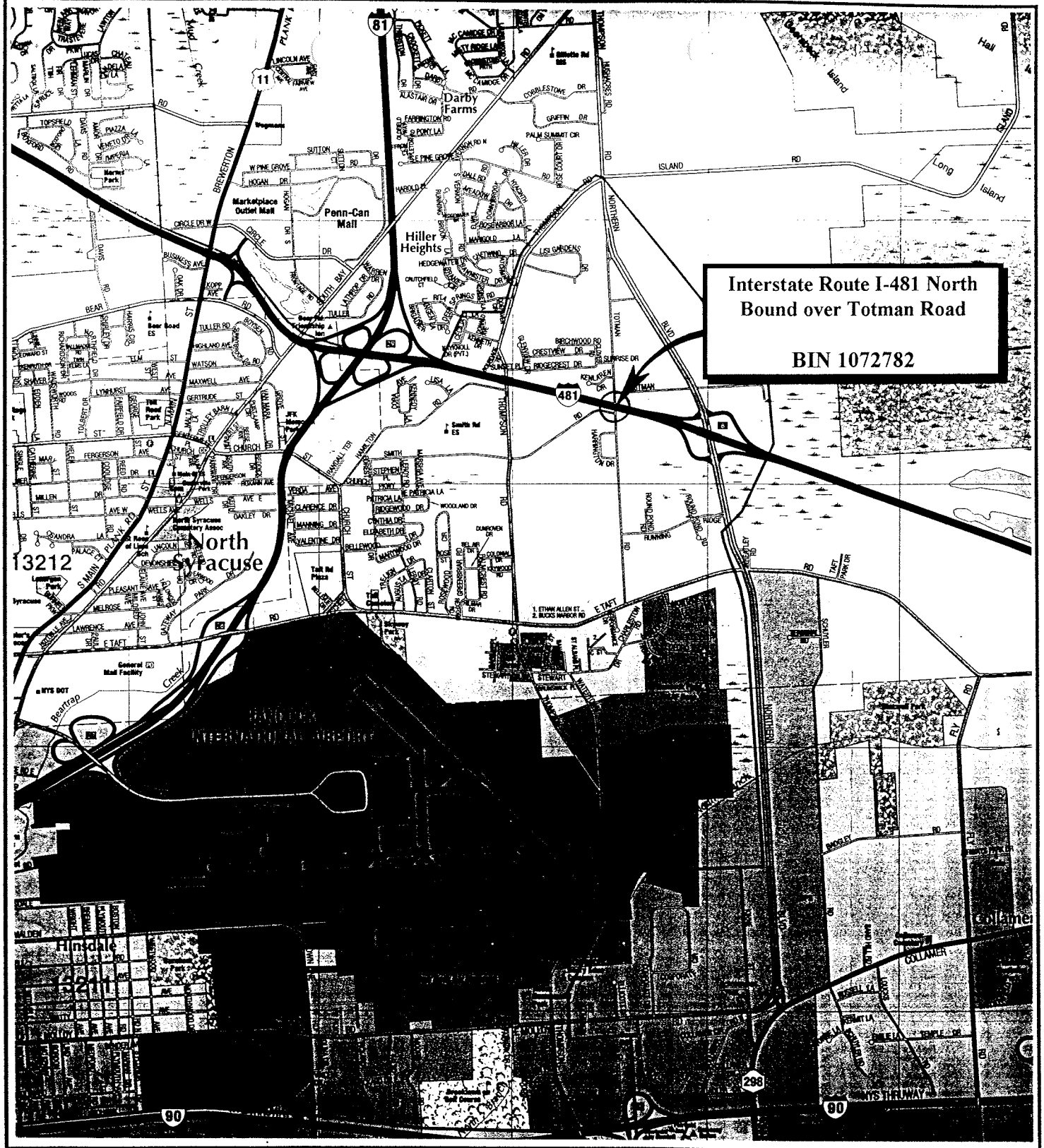

N

FIGURE 1
Site Location Map

Interstate Route I-481 North Bound over Totman Road
Onondaga County, New York

LABELLA

PROJECT NO. 201001

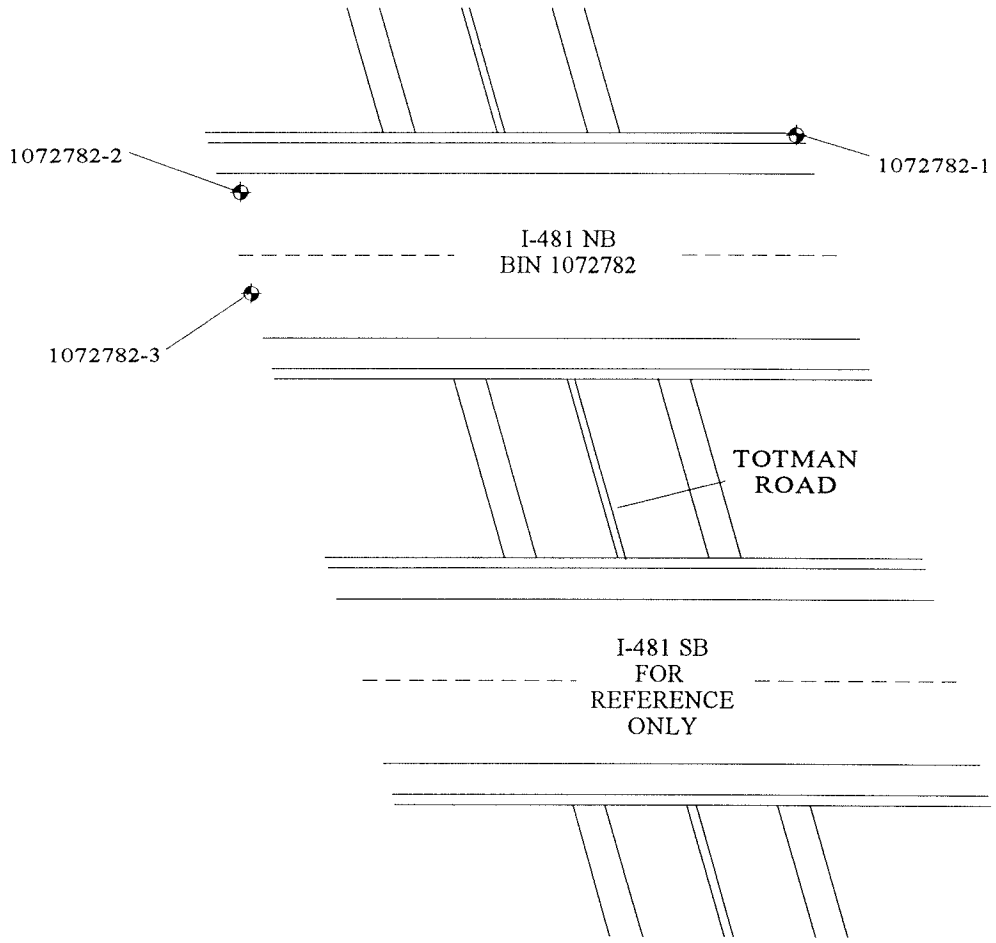

NOTE: NO ASBESTOS-CONTAINING MATERIALS IDENTIFIED.

LEGEND

◆ 1072782-1 SAMPLE LOCATION

NORTH

PROJECT TITLE: ASBESTOS SAMPLING SURVEY
19 BRIDGES ALONG INTERSTATE I-481
ONONDAGA COUNTY, NEW YORK

PROJECT NO. 201001

PIN 3056.13.111

FIGURE TITLE: FIGURE 2 BIN 1072782
I-481 NB OVER TOTMAN ROAD
SAMPLE LOCATIONS &
CONFIRMED ACM

NOT TO SCALE

DATE: AUGUST, 2001

Bulk Sample Results Table

Asbestos Sampling Survey
BIN 1072782
Interstate Route I-481 North Bound
over Totman Road
Onondaga County, New York
LaBella Project # 201001
PIN 3056.13.111

Sample #	Sample Location	Type of Material	Results % Asbestos	Amount of Material	Specification Item No.
1072782-1	East End of Bridge at Base of Fence	Gray Caulking Compound	None Detected	N/A	N/A
1072782-2	West End of Bridge Beneath Bearing	Bearing Pad	None Detected	N/A	N/A
1072782-3	West End of Bridge on Backwall	Gray Masonry Coating	None Detected	N/A	N/A

LATEST BIENNIAL INSPECTION REPORT

Inspection Date: 5/15/2012 RC: 33 BIN: 1072782

Bridge Ratings

Carried: 481I 481I33032132 Crossed: TOTMAN ROAD CheckValue: 1,791,837,352

Inspection Agency: 10 - NYSDOT Type of Inspection: 1 - BIENNIAL
GTMS: A02 -- Unpainted Steel - Stringer/Multi-Beam or Girder
POSTINGS: See Gen Rec Page 1 for Postings at time of inspection.
Further Investigation Needed: No
State Highway Number: 70-7 Milepoint: 14.99 AADT/Yr: 14378 / 2002
Orientation: 3 - East Political Unit: 0161 - Town of CICERO Year Built: 1986
Total Spans: 1 Ramp Bridge Attached To Span: NA BIN: NA
General Recommendation: 6 Computed Condition Rating: 5.381

Abutment Ratings:	**Beg Abut**	**End Abut**
Joint with Deck	6	6
Bearings, Bolts, Pads	5	5
Seats and Pedestals	4	5
Backwall	5	5
Stem (Breastwall)	5	5
Erosion or Scour	5	5
Footings	9	9
Piles	8	8
Recommendation	5	5

Wingwall Ratings:	**Beg Abut**	**End Abut**
Walls	6	6
Footings	9	9
Erosion or Scour	6	6
Piles	8	8

Channel Ratings:	**Channel**
Stream Alignment	8
Erosion and Scour	8
Waterway Opening	8
Bank Protection	8

Approach Ratings:	**Approaches**
Drainage	4
Embankment	6
Settlement	5
Erosion	6
Pavement	4
Guide Railing	4

Number of Flags Issued:

RED: 0 Yellow: 0 Safety: 0

Vulnerability Reviews Recommended: 1=Yes, 2=No, 3=NA, X=NotActive

Hydraulic: 3	Overload: X	Steel: 2
Collision: 2	Concrete: X	Seismic: X

Inspector's Signature: CheckValue: 1,791,837,352 Date: 5/15/2012

David Hann,PE () (Inspector ID:3000055)

Signed copy of this inspection report is available in the appropriate NYSDOT Regional Office

Reviewed By: Date: 7/3/2012

James R. Manning,PE () (QC ID:3000023)

Signed copy of this inspection report is available in the appropriate NYSDOT Regional Office

Inspection Date: 5/15/2012 RC: 33 BIN: 1072782

Span Ratings

Carried: 481I 481I33032132 Crossed: TOTMAN ROAD CheckValue: 1,791,837,352

Deck Element Ratings:	**001**
Wearing Surface	4
Curbs	8
Sidewalks, Fascias	6
Railings, Parapets	6
Scuppers	8
Gratings	8
Median	8
Mono Deck Surface	4

Superstructure Ratings:	**001**
Structural Deck	6
Primary Members	6
Secondary Members	6
Paint	5
Joints	8
Recommendation	6

Pier Ratings:	**001**
Bearings, Bolts, Pads	8
Pedestals	8
Top of Cap or Beam	8
Stem Solid Pier	8
Cap Beam	8
Pier Columns	8
Footings	8
Erosion or Scour	8
Piles	8
Recommendation	8

Utility Ratings:	**001**
Lighting	8
Sign Structure	8
Utilities and Support	8

Field Notes:

Field Date	Arrival	Departure	Temp (C)	Temp (F)	Weather Conditions
5/15/2012	7:30:00 AM	11:30:00 AM		60	Light rain

Inspection Date: 5/15/2012 RC: 33 BIN: 1072782

Inspection Notes

Carried: 481I 481I33032132 Crossed: TOTMAN ROAD CheckValue: 1,791,837,352

Note ID: 351210727820000

Beg Abut -- Abutment: Bearings, Bolts, Pads -- Rated 5, Was 4
End Abut -- Abutment: Bearings, Bolts, Pads -- Rated 5, Was 4
Referenced Photos: "1"
2012 - The begin and end bearings have been cleaned and some grease has been placed, although it was placed in the wrong spot for the expansion bearings. It should have been placed on the slider plate, not the top plate of bearing. The bearings show movement and therefore are a 5.

Note ID: 351210727820001

Beg Abut -- Abutment: Seats and Pedestals -- Rated 4, Was 6
Referenced Photos: "2"
2012 - The begin top corner of the bridge seat is cracked and/or delaminated along mainly between the peds for the top 6" along almost the entire width of abutment.

Note ID: 351210727820006

Beg Abut -- Wingwalls: Piles -- Rated 8, Was 9
End Abut -- Wingwalls: Piles -- Rated 8, Was 9
Referenced Photos:
2012 - According to plans the abutments and wingwalls are on spread footings (No piles).

Note ID: 351210727820002

Approaches: Drainage -- Rated 4, Was 5
Referenced Photos: "3"
2012 - The begin left quad of bridge has water puddled on the this lightly rainy day up to 1.5" deep.

Note ID: 351210727820007

Approaches: Pavement -- Rated 4, Was 4
Referenced Photos: "4", "5", "6"
2012 - The begin right lanes concrete approach pavement has an asphalt patch behind the joints header that is cracking up for approx. 1' long. There is also a 6" round surface spall near the yellow line at the begin right.

The end concrete approach slab small spalls starting to form around previous patches and at the ends of the slab, begin and end.

Note ID: 351210727820003

Approaches: Guide Railing -- Rated 4, Was 4
Referenced Photos: "3", "7"
2012 - The begin left bottom of concrete approach rail is minor. The end right has an impact that has bowed the top boxbeam rail inward slightly and has 3 consectutive posts completely bent over. There is approx. 25' of rail that is wobbly when kicked and has 4 posts that have

Inspection Notes

Carried: 481I 481I33032132 Crossed: TOTMAN ROAD CheckValue: 1,791,837,352

Note ID: 351210727820003 - continued

unattached angles to the boxbeam rail. It is still mostly in place and can still deflect traffic.

Note ID: 351210727820004

Span 001 -- Deck Elements: Wearing Surface -- Rated 4, Was 5
Span 001 -- Deck Elements: Mono Deck Surface -- Rated 4, Was 5
Referenced Photos: "8"
2012 - Near the end right lane there is an approx. 1' round spalled/cracked area of wearing surface with small amount of asphalt placed. The rest of the wearing surface is starting to be worn smooth in the wheel paths.

Note ID: 351210727820005

Span 001 -- Superstructure: Paint -- Rated 5, Was 4
Referenced Photos: "1"
2012 - The begin and ends of the fascia girders have been painted approx. for the end 5' of the girders inside and out. The rest of the weathering steel is in a 5 condition.

Inspection Date: 5/15/2012 RC: 33 BIN: 1072782

Inspection Photos in Photo Number Order

Carried: 481I 481I33032132 Crossed: TOTMAN ROAD CheckValue: 1,791,837,352

End Bearing #1 and Pain



Photo Number: 1 Photo Filename: 12EndBrg1Paint.jpg

Begin seat between Peds 4 & 5



Photo Number: 2 Photo Filename: 12BegSeat45.jpg

Inspection Date: 5/15/2012 RC: 33 BIN: 1072782

Inspection Photos in Photo Number Order

Carried: 481I 481I33032132 Crossed: TOTMAN ROAD CheckValue: 1,791,837,352

Begin left Drainage and Guide Rail



Photo Number: 3 Photo Filename: 12BegLtDranGrail.jp

Begin Pavement



Photo Number: 4 Photo Filename: 12BegPavt.jpg

Inspection Date: 5/15/2012 RC: 33 BIN: 1072782

Inspection Photos in Photo Number Order

Carried: 481I 481I33032132 Crossed: TOTMAN ROAD CheckValue: 1,791,837,352

Begin Pavement at Bridge



Photo Number: 5 Photo Filename: 12BegPavtb.jpg

End Pavement



Photo Number: 6 Photo Filename: 12EndPavt.jpg

Inspection Date: 5/15/2012 RC: 33 BIN: 1072782

Inspection Photos in Photo Number Order

Carried: 481I 481I33032132 Crossed: TOTMAN ROAD CheckValue: 1,791,837,352

End Right Guide rail



Photo Number: 7 Photo Filename: 12EndRtGrail.jpg

Wearing Surface near end



Photo Number: 8 Photo Filename: 12WS.jpg

Inspection Date: 5/15/2012 RC: 33 BIN: 1072782

Inspection Sketches in Sketch SysID Order

Carried: 481I 481I33032132 Crossed: TOTMAN ROAD CheckValue: 1,791,837,352

Sketch ID: 351210727820000 Sketch Filename: LdRat.12

General Sketch for Bridge
Referenced Photos:

LOAD RATING FIELD CHECK FORM

Region 3 LoadRatingFieldCheckForm

NYSDOT BRIDGE INSPECTION REPORT			
SHEET	1	OF	1

LOAD RATING FIELD CHECK FORM

BIN:	1072782		Insp. Date:	05/15/2012

Dead Load - Note Changes since Last load Rating or state "NONE":

none

Section Loss - Note locations and amount of loss on each girder or state "NONE":

none

Additional Notes:

none

Attachments:

none

Team Leader: Dave Hann

Inspection Date: 5/15/2012 RC: 33 BIN: 1072782

Inspection Sketches in Sketch SysID Order

Carried: 481I 481I33032132 Crossed: TOTMAN ROAD CheckValue: 1,791,837,352

Sketch ID: 351210727820001 Sketch Filename: BridgeLocMap.02.tif

General Sketch for Bridge
Referenced Photos:

Electrical Survey

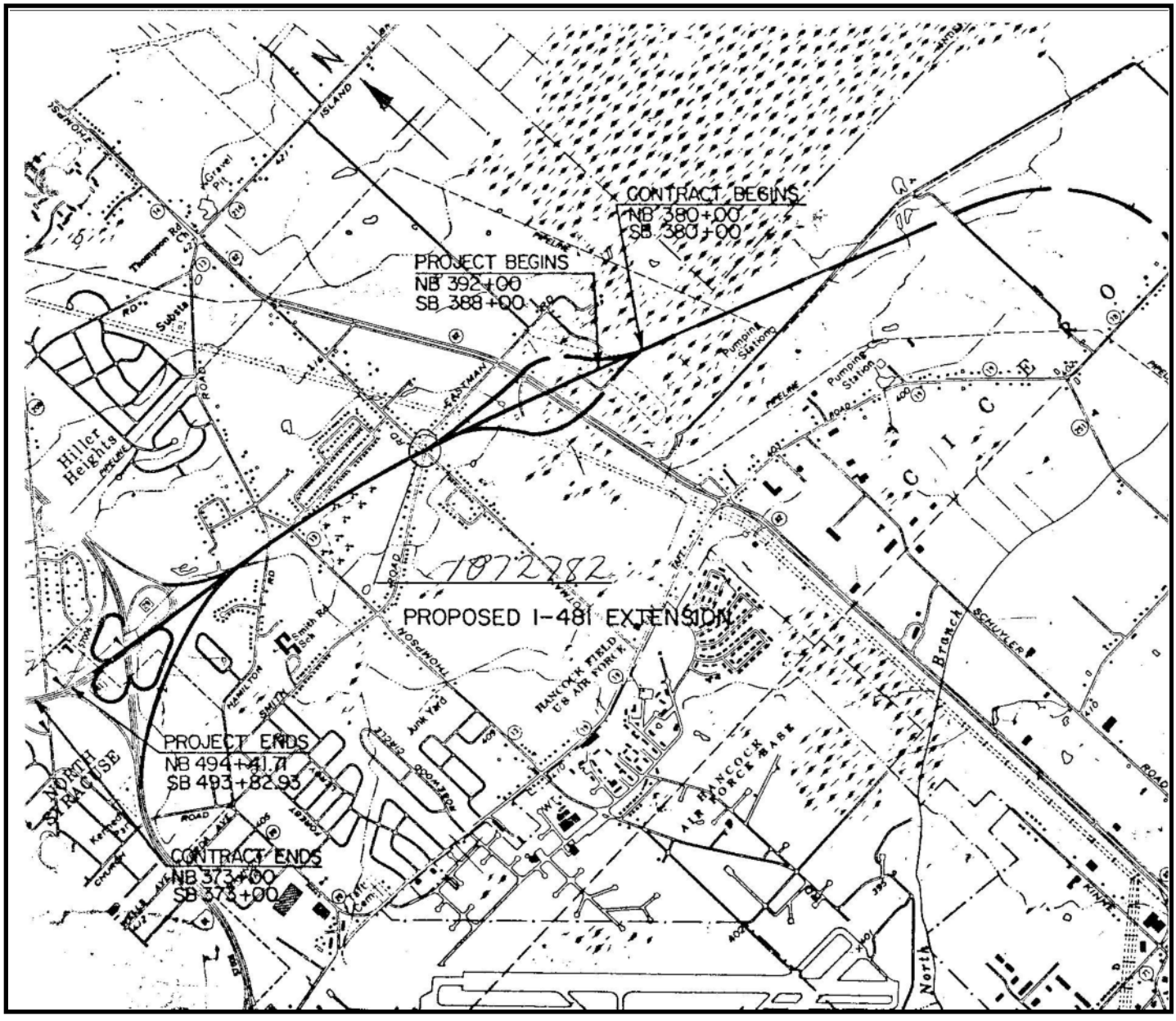

Inspection Date: 5/15/2012 RC: 33 BIN: 1072782

Gen. Rec., Postings, Federal Ratings, etc.

Carried: 481I 481I33032132 Crossed: TOTMAN ROAD CheckValue: 1,791,837,352

Overall Condition:

GENERAL RECOMMENDATION: 6

Computed Condition Rating: 5.381

Problems Requiring Action:

NO Further Investigation Needed

NO Flags Issued

POSTINGS:

Inspector Confirmed existing Posting data as correct.
Posted Vertical Clearance ON the bridge is: No Posting
Posted Vertical Clearance UNDER the bridge is: No Posting
No Load Restriction is posted on this bridge

Overloads Observed:

NO Overload Vehicles were observed on this bridge

FEDERAL RATINGS:

NBI Deck Condition: 7
NBI Superstruct Condition: 7
NBI Substruct Condition: 6
NBI Channel Condition: N
NBI Culvert Condition: N

Diving Inspection Needs:

Diving Inspection Required? No Date of Last Diving Inspection: No Date

Inventory Problems:

Inventory Problems Exist? No

Miscellaneous:

Time Required to Inspect Bridge: 2 Hours

Lane Closure Needs: None Required

No Railroad Flagging Required

There is a Pedestrian Fence 12.00 Feet High

No Snow Fence

The BIN Plate is in DAMAGED condition

Inspection Date: 5/15/2012 RC: 33 BIN: 1072782

Gen. Rec., Postings, Federal Ratings, etc.

Carried: 481I 481I33032132 Crossed: TOTMAN ROAD CheckValue: 1,791,837,352

Special Emphasis Inspection Required:

Non-Redundant/Fracture Critical Members - No
Pin and Hangers - No
Fatigue-Prone Welds - No
Non-Categorized Fatigue-Prone Details - No
Other (Specified in Text) - No

Special Emphasis Details:

No Special Emphasis Inspection Required.

General Notes To the Next Inspector:

Bin plate is on the end left backwall outside of G1.

Improvements Observed:

Inspection Date: 5/15/2012 RC: 33 BIN: 1072782

Review Progress and Personnel Present at Inspection

Carried: 481I 481I33032132 Crossed: TOTMAN ROAD CheckValue: 1,791,837,352

Inspection Submission Status:

Submitted to QC Engineer on: 6/4/2012
QC Submission Number: 553203

QC Review Completed: 7/3/2012
QC Engineer: James R. Manning

Submitted to Liaison Engineer on: 7/11/2012
Liaison Submission Number: 53211

Liaison Review Completed: 9/6/2012
Liaison Engineer: TODD M. HERMANN

Submitted for BIIS Processing on: 9/7/2012
BIIS Submission Number: .kp1

Current Status: Keypunched, Sent to BIIS
Check Value: 1,791,837,352

Personnel Present During Inspection:

David Hann - Team Leader
Steve Grabosky - Assistant Team Leader

Inspection Date: 5/15/2012 RC: 33 BIN: 1072782

Inspection Access Requirements

Carried: 481I 481I33032132 Crossed: TOTMAN ROAD CheckValue: 1,791,837,352

Equipment Required for Inspection

No Access Requirement Changes Noted During This Inspection.
This Listing is from the Inventory Database.

ACCESS CATEGORIES FOR ENTIRE BRIDGE
Required: Walking

ACCESS CATEGORIES FOR SPAN 1
Required: Walking

Inspection Date: 5/15/2012 RC: 33 BIN: 1072782

Culvert Measurements

Carried: 481I 481I33032132 Crossed: TOTMAN ROAD CheckValue: 1,791,837,352

Culvert Measurements

NO CULVERT DATA FOR BIN 1072782

Standard Photos **RC: 33 BIN: 1072782**

Carried: 481I 481I33032132 Crossed: TOTMAN ROAD

1072782_LOCATION_MAP.JPG

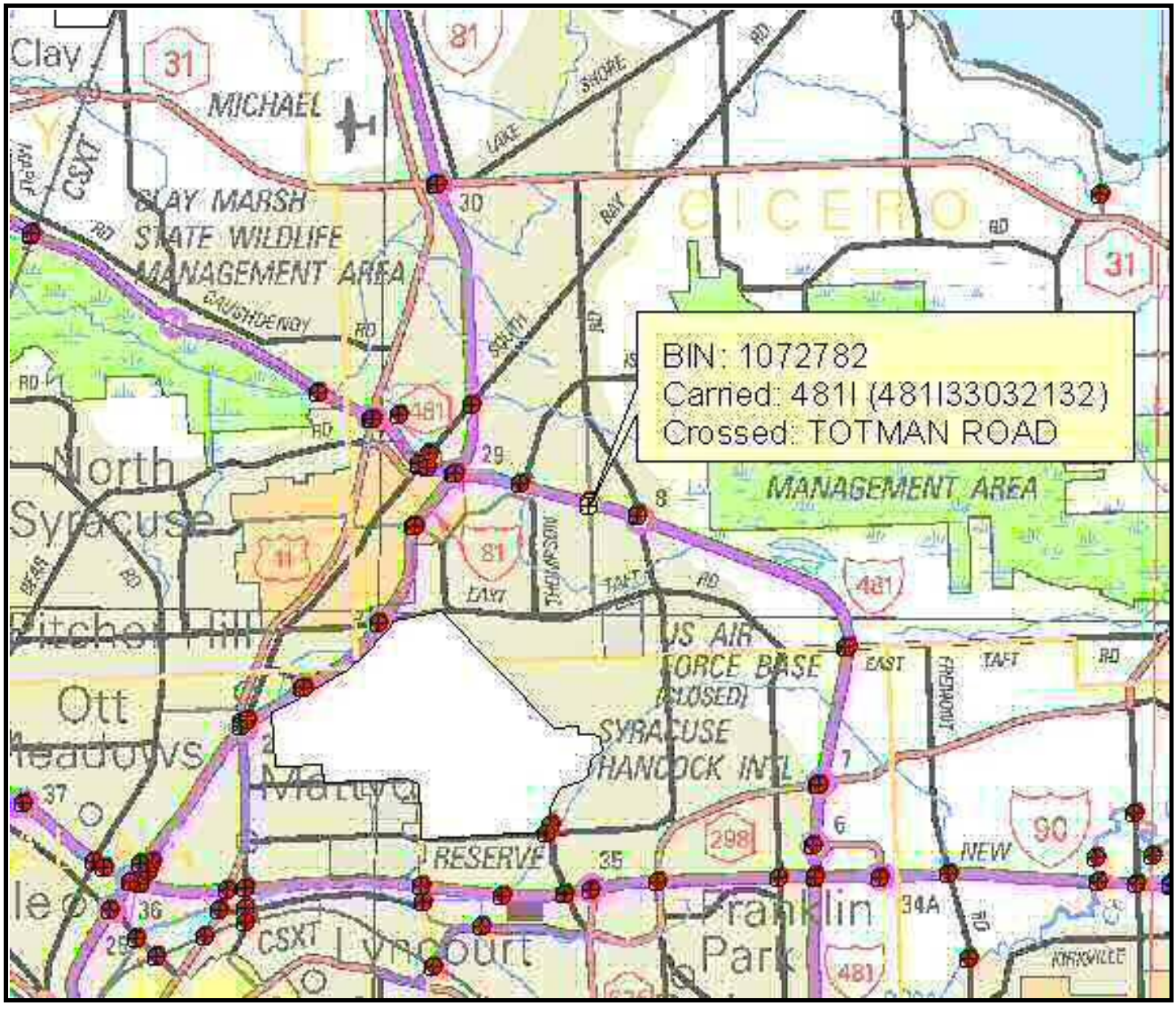

Standard Photos **RC: 33 BIN: 1072782**

Carried: 481I 481I33032132 Crossed: TOTMAN ROAD

1072782_QUAD_MAP.JPG

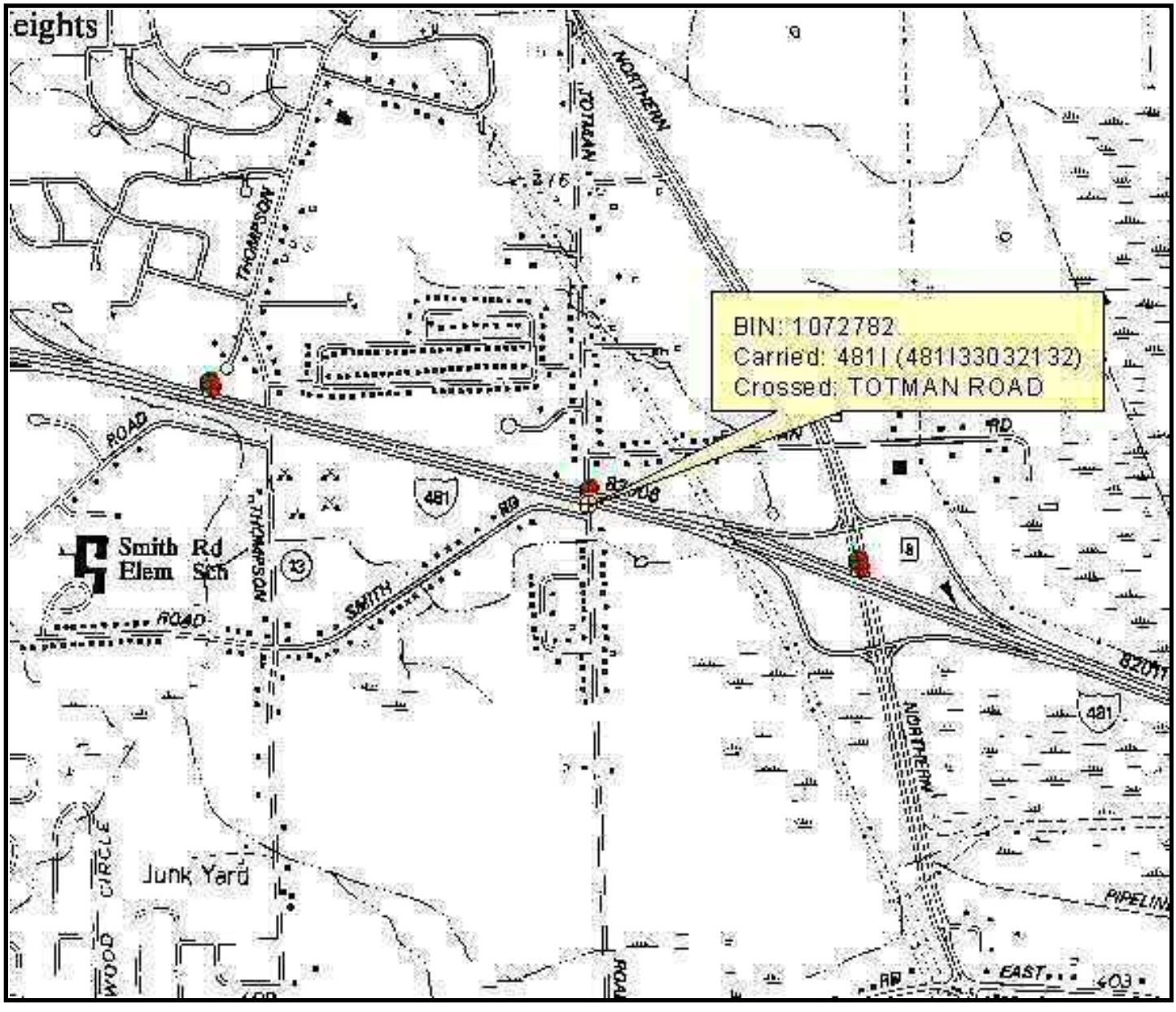

Standard Photos **RC: 33 BIN: 1072782**

Carried: 481I 481I33032132 Crossed: TOTMAN ROAD

BeginAbutment12.jpg

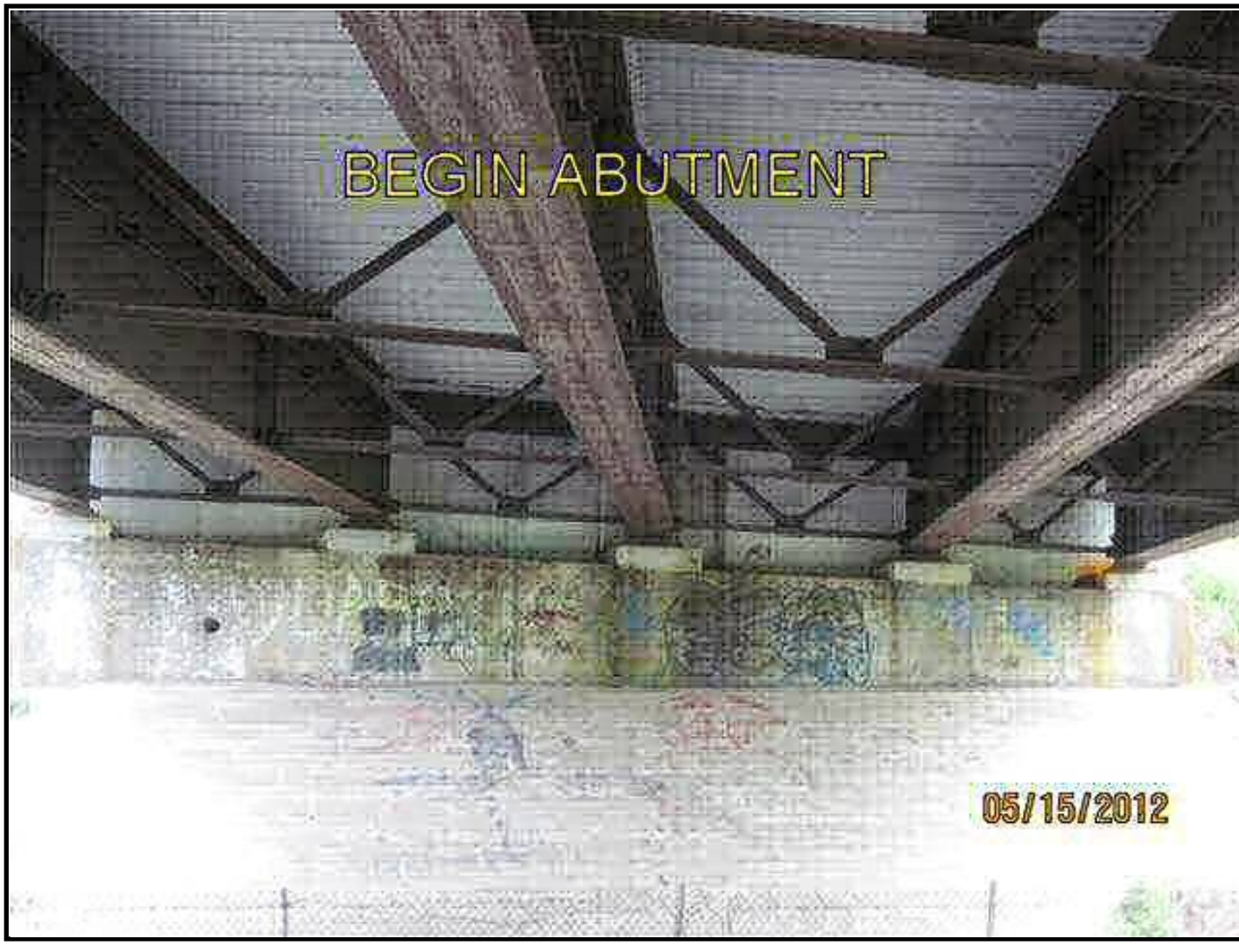

Standard Photos **RC: 33 BIN: 1072782**

Carried: 481I 481I33032132 Crossed: TOTMAN ROAD

BeginApproach12.jpg



Standard Photos **RC: 33 BIN: 1072782**

Carried: 481I 481I33032132 Crossed: TOTMAN ROAD

BeginRightwingwall12.jpg



Standard Photos **RC: 33 BIN: 1072782**

Carried: 481I 481I33032132 Crossed: TOTMAN ROAD

EndApproach12.jpg



Standard Photos **RC: 33 BIN: 1072782**

Carried: 481I 481I33032132 Crossed: TOTMAN ROAD

F2Left12.jpg



Standard Photos **RC: 33 BIN: 1072782**

Carried: 481I 481I33032132 Crossed: TOTMAN ROAD

F2Right12.jpg



Standard Photos **RC: 33 BIN: 1072782**

Carried: 481I 481I33032132 Crossed: TOTMAN ROAD

LeftElevation12.jpg



Standard Photos **RC: 33 BIN: 1072782**

Carried: 481I 481I33032132 Crossed: TOTMAN ROAD

Underside12.jpg



LEVEL 1 LOAD RATING SUMMARY SHEET

Region/County Region 3/Onondaga BIN 1072782
Feature(s) Carried and Crossed I-481 Northbound/Totman Road
Date of field inspection upon which Level 1 rating is based 2/4/2014

OVERALL BRIDGE RATTNGS (BASED ON LOWEST RATED ELEMENTS):

Total number of rating units 1

	H inventory	H operating	HS inventory	HS operating
Rating	H 30.43 (tons)	H 50.82 (tons)	HS 49.07 (tons)	HS 81.96 (tons)
Lowest rated element	Interior Girders G2 and G3	Interior Girders G2 and G3	Interior Girders G2 and G3	Interior Girders G2 and G3

Analysis method LFR Comments

Individual Rating Unit Level 1 values:

Rating unit span(s) 1

Main member ratings

	H inventory	H operating	HS inventory	HS operating
Rating	H (tons)	H (tons)	HS (tons)	HS (tons)
Lowest rated element				

Analysis method Comments

Floorbeam ratings

	H inventory	H operating	HS inventory	HS operating
Rating	H (tons)	H (tons)	HS (tons)	HS (tons)
Lowest rated element				

Analysis method Comments

Stringer ratings

	H inventory	H operating	HS inventory	HS operating
Rating	H 30.43 (tons)	H 50.82 (tons)	HS 49.07 (tons)	HS 81.96 (tons)
Lowest rated element	Interior Girders G2 and G3	Interior Girders G2 and G3	Interior Girders G2 and G3	Interior Girders G2 and G3

Analysis method LFR Comments

Certified by Date

Quality Control Engineer Signature Date
Agency or Company represented by certifier

Note:
-If connection ratings govern, record them under stringer ratings for stringer – floorbeam connection, floorbeam ratings for floorbeam-main member connections, etc.
-When Level 1 results indicated the need for load posting or other corrective action, the NYSDOT Regional Structures Engineer shall be notified immediately.
-Load ratings should be filed in the regional office within 60 days of completion of calculations.
-Bridges shall be flagged based on Level I results in accordance with the current NYSDOT flagging procedure.
-Bridge load posting, closure, etc. determinations shall be made as results are being produced.

PARSONS

100 Broadway
New York, NY 10005
Phone: 212-266-8300
Fax: 212-571-6825
www.parsons.com

TECHNICAL MEMORANDUM

FROM: Kian Siang Chau, P.E
NYSPE 082744

DATE: MARCH 19, 2014

RE: SEISMIC SCREENING SUMMARY
NEW YORK STATE DEPARTMENT OF TRANSPORTATION
D031085; PIN 3501.60; I-81

BIN: 1072782 (I-481 NB/Totman Rd)

This memorandum summarizes the seismic screening conducted for BIN 1072782 as part of the Interstate 81 Project in Syracuse, NY. The purpose of the screening is to determine if seismic retrofits are warranted at the superstructure to substructure connection, and if further seismic evaluation of the structure is required. This memorandum will give the screening results, retrofits required and recommendations for further seismic evaluation of the structure.

SCREENING PROCEDURE

The seismic screening was performed in accordance with the FHWA Seismic Retrofitting Manual for Highway Structures: Part 1 - Bridges, January 2006. As per the referenced manual, seismic screenings were performed for both lower level and upper level earthquake ground motion. The lower level earthquake ground motion has a reasonable likelihood of occurrence within the life of the bridge (50% probability of exceedance within a 75 year bridge life). The upper level earthquake ground motion has a finite likelihood of occurrence within the life of the bridge (7% probability of exceedance within a 75 year bridge life).

Values for the spectral acceleration for the Syracuse area used in the screening are as follows:

- Lower Level Earthquake Ground Motion for a Short Period (0.2 seconds): $S_S = 0.0251$
- Lower Level Earthquake Ground Motion for a Long Period (1.0 seconds): $S_1 = 0.0076$
- Upper Level Earthquake Ground Motion for a Short Period (0.2 seconds): $S_S = 0.139$
- Upper Level Earthquake Ground Motion for a Long Period (1.0 seconds): $S_1 = 0.047$

These values are considered constant and are the same for all seismic screenings of bridges in the Syracuse area.

The Site Class is based on the soil conditions at the bridge location. It was determined that this parameter has little effect on the results of the seismic screening because the spectral acceleration values for the Syracuse area are small. Based on this, a site class of D was used for all seismic screenings of bridges in the Syracuse area.

Bridge parameters used in the seismic screening were retrieved from the record drawings and WinBolts data.

The seismic screening takes into account the anticipated service life, importance, and the seismic exposure of the bridge to determine a seismic retrofit category (SRC). The SRC is then used to determine seismic evaluation methods and retrofit measures. There are four SRCs, A through D. Seismic retrofit category A is the lowest category; bridges in this category do not require retrofits or further seismic evaluation. Seismic retrofit category D is the highest category; bridges in this category requiring the most rigorous seismic evaluations and retrofits.

SCREENING RESULTS

The SRC for the bridge is "**C**" for lower level earthquake ground motion and "**B**" for upper level earthquake ground motion.

RETROFITS REQUIRED

No seismic retrofits are required for the bridge superstructure to substructure connection.

RECOMMENDATIONS FOR FURTHER SEISMIC EVALUATION

No further seismic evaluation is required for lower level earthquake ground motion. For the upper level earthquake ground motion, it is recommended that the capacities of the bearings are checked as per Section 5.2 of the referenced manual.

Retrofit cost estimates will be provided after any further required seismic evaluations are completed.

BRIDGE DECK EVALUATION REPORT

RECOMMENDATIONS

The bridge deck inspection findings and evaluation are used as a tool for developing the scope of work and cost estimates for the development and comparison of alternatives for the overall project.

The total damaged area of the deck is 0.3% of the total deck surface area. The cores indicate the reinforcement steel is 2.0 inches to 2.75 inches below the surface of the deck. The lab test indicates that chloride ion concentrations at two of the three sample locations are significantly higher than the corrosion threshold for steel.

Due to the age, condition and high chloride ion content of the bridge deck concrete, the bridge deck should be rehabilitated or replaced to meet the current standards and to mitigate excessive future maintenance costs.

ALTERNATIVES

- Rehabilitation Alternative - 3 inches Bonded Concrete Overlay
  - Scope

    The scope of this alternative will include the complete removal of the bridge parapets and fascias to the level of the original top of the deck. The joint will be removed. The top 2 inches of the entire deck will be removed and areas of deteriorated concrete must be removed to at least 1 inch below the level of the reinforcement steel and to the horizontal and vertical limit of any detectable hollow areas. Additionally, any further areas of deteriorated concrete detected will require full depth removal. Any corrosion of the reinforcement steel will be removed by sandblasting or hydro-blasting. The proposed deck overlay will be a 3 inches thick bonded concrete overlay yielding a nominal 9.5 inches standard thickness deck. A new single-sloped concrete barrier and a new armorless joint will be installed. The Level 1 Load Rating for the final condition was found to be acceptable.

- Useful Life Expectancy

  The removal of the top 2 inches of the existing deck will remove a portion of the deck with high chloride ion concentrations. It can be anticipated that chloride ions will continue to migrate into the remaining deck to the reinforcing steel resulting in further corrosion-related deterioration of the deck surface. Concrete admixtures will be included in the bonded concrete overlay to impede the continued penetration of chloride into the deck from the surface. This alternative will result in an extended useful life expectancy estimated at 20 years.

The design life of the project is 30 years (ETC + 30). This alternative does not meet the project objectives of obtaining 30 years of service life and is not evaluated further.

- Rehabilitation Alternative – 100% Deep Removal and Partial Deck Reconstruction
  - Scope

    The scope of this alternative will include the complete removal of the bridge parapets and fascias to the level of the original top of the deck. The joint will be removed. The scope of this alternative will include partial depth reconstruction with removal of the concrete to at least 1 inch below the top mat of the reinforcement steel. Additionally, any further areas of deteriorated concrete detected will require full depth removal. Any corrosion of the reinforcement steel will be removed by sandblasting or hydro-blasting. Due to the condition of the deck, full depth removal is not likely and not included in the cost estimate. The proposed deck partial reconstruction will be a nominal 5.75 inches thick concrete deck yielding a 9.5 inches standard thickness deck. A new single-sloped concrete barrier and a new armorless joint will be installed. The Level 1 Load Rating for the final condition was found to be acceptable.
  - Useful Life Expectancy

    This alternative will provide a useful life expectancy is estimated at 35 years.
  - Cost Estimate

    The estimated cost for this alternative is $407,000. The Engineer's Opinion of Probable Construction Cost worksheet is at the end of this section.

- Replacement Alternative – Cast-In-Place Concrete
  - Scope

    This scope of this alternative will include the complete demolition of the existing bridge deck, parapets, fascias and bridge joint. The bridge deck will be replaced with a new 9.5 inches standard thickness concrete deck. A new single-sloped concrete barrier and a new armorless joint will be installed. The Level 1 Load Rating for the final condition was found to be acceptable.
  - Useful Life Expectancy

    This alternative will provide a useful life expectancy is estimated at 40+ years.
  - Cost Estimate

    The estimated cost for this alternative is $547,000. The Engineer's Opinion of Probable Construction Cost worksheet is at the end of this section.

- Replacement Alternative – Pre-cast Concrete Deck Panels
  - Scope

    The scope of this alternative is similar to the Cast-In-Place Concrete Deck Replacement Alternative except the deck structure will be precast panels. This alternative offers reduced construction time over conventional construction.
  - Useful Life Expectancy

    This alternative will provide a useful life expectancy is estimated at 40+ years.
  - Cost Estimate

    The comparison of accelerated construction to conventional construction is beyond the current scope of this evaluation.

IN-DEPTH INSPECTION REPORT

D031085 P.I.N. 3501.60

ELEMENT SPECIFIC BRIDGE WORK

B.I.N. 1072791

TEAM LEADER Andrew P. Thompson 84914
NYSPE LICENSE #

ASSISTANT TEAM LEADER Mike Savino

FEATURE CARRIED I-481 Southbound

FEATURE CROSSED Thompson Road

DATE FIELD WORK BEGAN 12/11/13

DATE FIELD WORK COMPLETED 1/7/14

TABLE OF CONTENTS

- STRUCTURE IDENTIFICATION
- INTRODUCTION
- PROJECT LOCATION MAP
- IN DEPTH CONDITION DOCUMENTATION
- PLANS & SKETCHES
- IN-DEPTH PHOTO DOCUMENTATION
- ASBESTOS SAMPLING SURVEY
- LATEST BIENNIAL INSPECTION REPORT

STRUCTURE IDENTIFICATION

a. Bridge Identification Number (BIN): 1072791
b. Reference Marker: 481I 3301 2136
c. Region: NYSDOT Region 3
d. County: Onondaga
e. Town: Cicero
f. Feature Carried: I-481 Southbound
g. Feature Crossed: Thompson Rd.

INTRODUCTION

a. Bridge History
   i. Year Built: 1986
   ii. Bridge Type: Single Span Steel, Multi-girder
   iii. Span Length: 101 feet
   iv. Out-to-Out Width: 42.8 feet
   v. Structural Ratings and Rankings
      1. Federal Sufficiency: 85 (June 2012)
      2. Condition Rating: 5.603 (June 2012)
      3. General Recommendation: 6
   vi. Live Load Posting (HS25): No
   vii. National Highway System (NHS): Yes
   viii. Previous work Done: Waterproof bridge deck (1999) Joint seal, Bearing restoration & miscellaneous concrete repairs to abutments (2002)
   ix. Planned Future Work: N/A
b. Highway Classification
   i. Functional Classification: Urban Principle Arterial - Interstate
   ii. Traffic Volumes

YEAR	AADT Projected
2014	36758
2034	54620
2054	81163

   iii. Plan for Maintenance and Protection of Traffic:
   Maintenance and Protection of traffic will be achieved by staged construction.

PROJECT LOCATION MAP

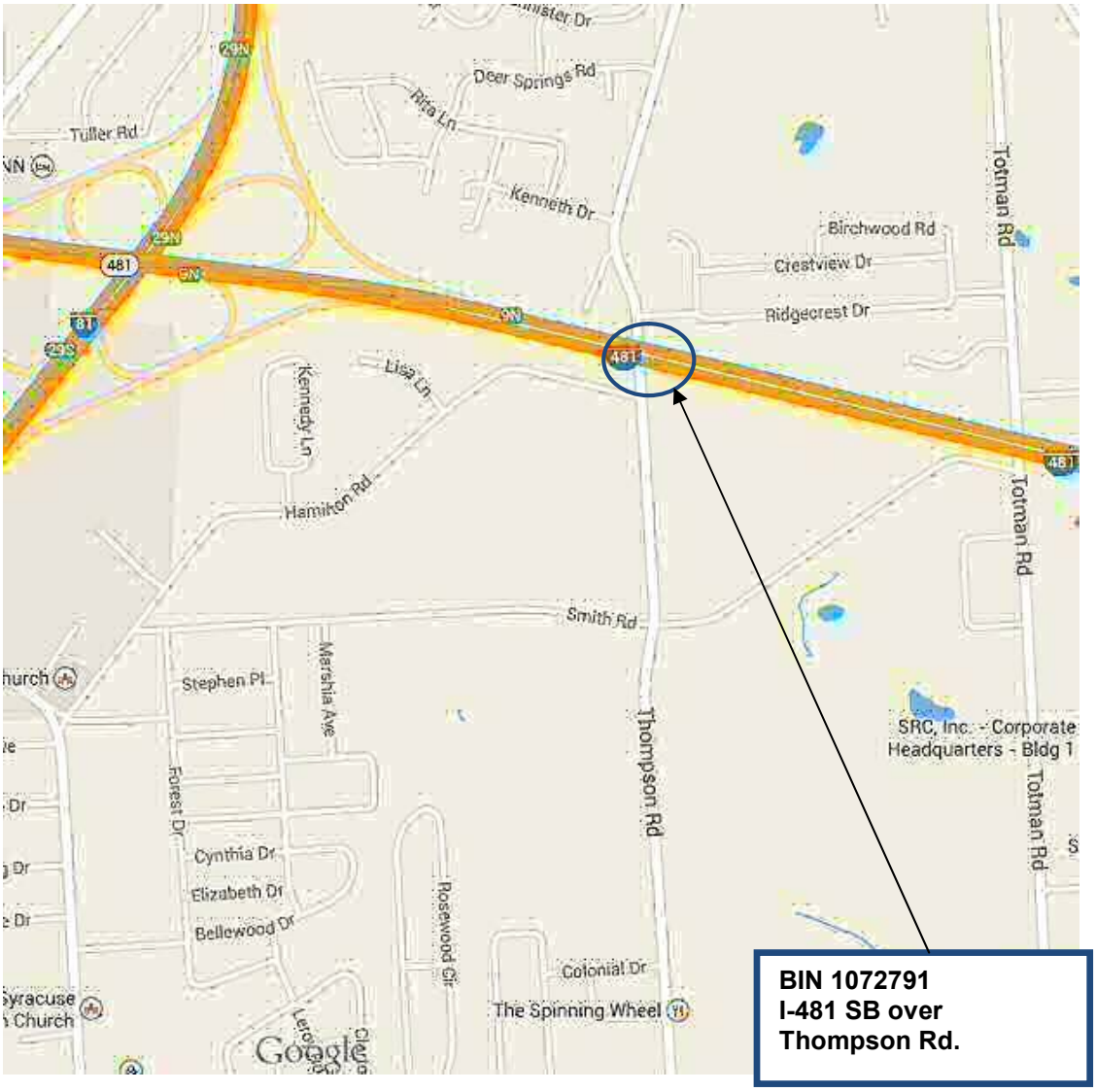

IN-DEPTH CONDITION DOCUMENTATION

NYS DEPT. OF TRANSPORTATION BRIDGE **BIN** 1072791 **SHEET:** 1 **OF** 3 **DATE:** 1/7/2014

FEATURE CARRIED: I-481 SB
FEATURE CROSSED: THOMPSON RD

TEAM LEADER: A.THOMPSON
A. TEAM LEADER: M. SAVINO

ITEM	REMARKS	PHOTO N0.
TP 349-26	Begin Abutment - Seats and Pedestals: Pedestal 5 has a full height hairline crack on its right face but sounds solid. The remainder of the pedestals are in good condition.	1
TP 349-28	Begin Abutment - Backwall: The backwall at the right has a 5" dia. x 1.5" deep spall at the top 1.5' from the right with 4 sf of map cracking surrounding it and a 6" wide x 3" high x 1/2" deep spall behind Girder 5 (Photo 2). There are full height hairline cracks located behind Girder 4, in Bay 2, and behind Girder 2 (Photo 3). Remainder is in good condition.	2,3
TP 349-29	End Abutment - Backwall: The backwall at the left has hairline vertical and horizontal cracks near the top measuring 1.5' long with 1 sf of map cracking with rust staining (Photo 4). Full height hairline cracking was noted behind Girder 2 and in Bay 2 (Photo 6). The backwall at the right has full height map cracking with efflorescence for the right 2' (Photo 5). No spalling or hollowness noted. Remainder is in good condition.	4-6
TP 349-30	Begin Abutment - Stem: The begin stem has a 36 sf hollow area at the right and a 6 sf hollow area at the left. The remainder of the stem has some vertical hairline cracking but is in good condition.	7
TP 349-31	End Abutment - Stem: The end stem has a 6 sf hollow area at the top left and a 10" x 3" hollow area at the top right. The remainder of the stem is in good condition.	8
TP 350-21	Deck Elements – Sidewalks/Fascias: Both fascias have map cracking throughout with no spalling or hollow sounding areas. The bridge has no sidewalks.	9
TP 350-22	Deck Elements - Railings/Parapets: The inside and outside faces of the parapets have light map cracking but are solid sounding (Photos 9 and 10).	9,10

ITEM	REMARKS	PHOTO N0.
TP 350-27	Superstructure - Structural Deck: The structural deck is an 8.5" thick concrete mono deck with SIP forms. The left lane is in good condition except for 2 hollow areas near midspan (Photo 12). The right lane has several areas of hollowness (Photos 11 and 13). There are also several patches that are in good condition (Photo 13). Conditions are documented in the attached Deck Deterioration Plan. The underside has SIP forms and is exposed only at the overhangs (Photo 16). The deck at the right overhang at the begin backwall has an 8" dia. x 1" deep spall with rust staining (Photo 2). The left and right overhangs have 3” deep corner spalling with exposed rebar at the end backwall. The left spalling is 1’ wide and the right spalling is 2.5’ wide with a 2’ length of debonded rebar (Photos 4 and 5). The remainder of both overhangs have hairline cracking at +/-3’ spacing (Photo 15). The SIP form is missing 5’ from the end for the full width of Bay 1 for a length of 4’ (Photo 14). The deck and surrounding forms in this location are in good condition. Remainder of forms in good condition.	2,4,5 11-16
TP 350-30	Superstructure - Paint: The protective coating is coming off in large sheets on the fascia girder bottom flanges and lower portions of the web (Photos 15 and 17). The left fascia girder is worse with the lower half of the web affected. The remainder of the fascia and interior girders has only light peppering and is in good condition (Photo 16).	15-17

NYS DEPT. OF
TRANSPORTATION BRIDGE

BIN 1072791

SHEET: 3 OF 3
DATE: 1/7/2014

FEATURE CARRIED: I-481 SB
FEATURE CROSSED: THOMPSON RD

TEAM LEADER: A.THOMPSON
A. TEAM LEADER: M. SAVINO

ITEM	REMARKS	PHOTO N0.
	Special Emphasis Inspection Required Non-Redundant/Fracture Critical Members - No Pin and Hangers - No Fatigue-Prone Welds - No Non-Categorized Fatigue-Prone Details - No Other - No	

PLANS & SKETCHES

1072791 S.B

D250416

V R. Engle (TY) 11-12-98

1072791
SB

FED. RD. REG. NO.	STATE	FEDERAL AID PROJECT NO.	SHEET NO.	TOTAL SHEETS
	NEW YORK	I-481-1(154) IR-81-2(154)	278	380

INTERSTATE RTE. 570 EXTENSION (I-481)
NORTHERN BLVD. TO BEAR ROAD INTERCHANGE
ONONDAGA COUNTY

CAPITAL PROJECT IDENTIFICATION NO. 7108.13 (11)

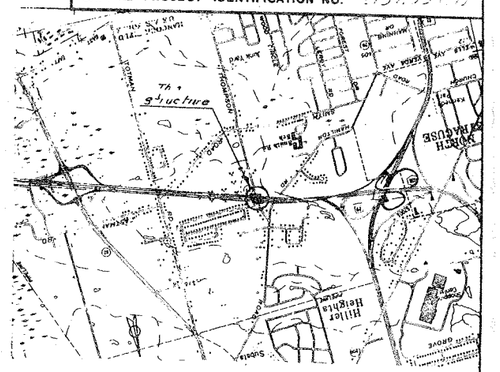

LOCATION MAP
SCALE 1" = 2000'
CLOSED QUADRANGLE

BIN 1072791 (Br. 11) & BIN 1072792 (Br. 10)	
INVENTORY RATING	OPERATING RATING
HS 23(42T)(W.S.)	HS 47(85T)(W.S.)

The ratings shown are based on the use of the Type 2 Form System - See Dwg. No. 21 of 38.

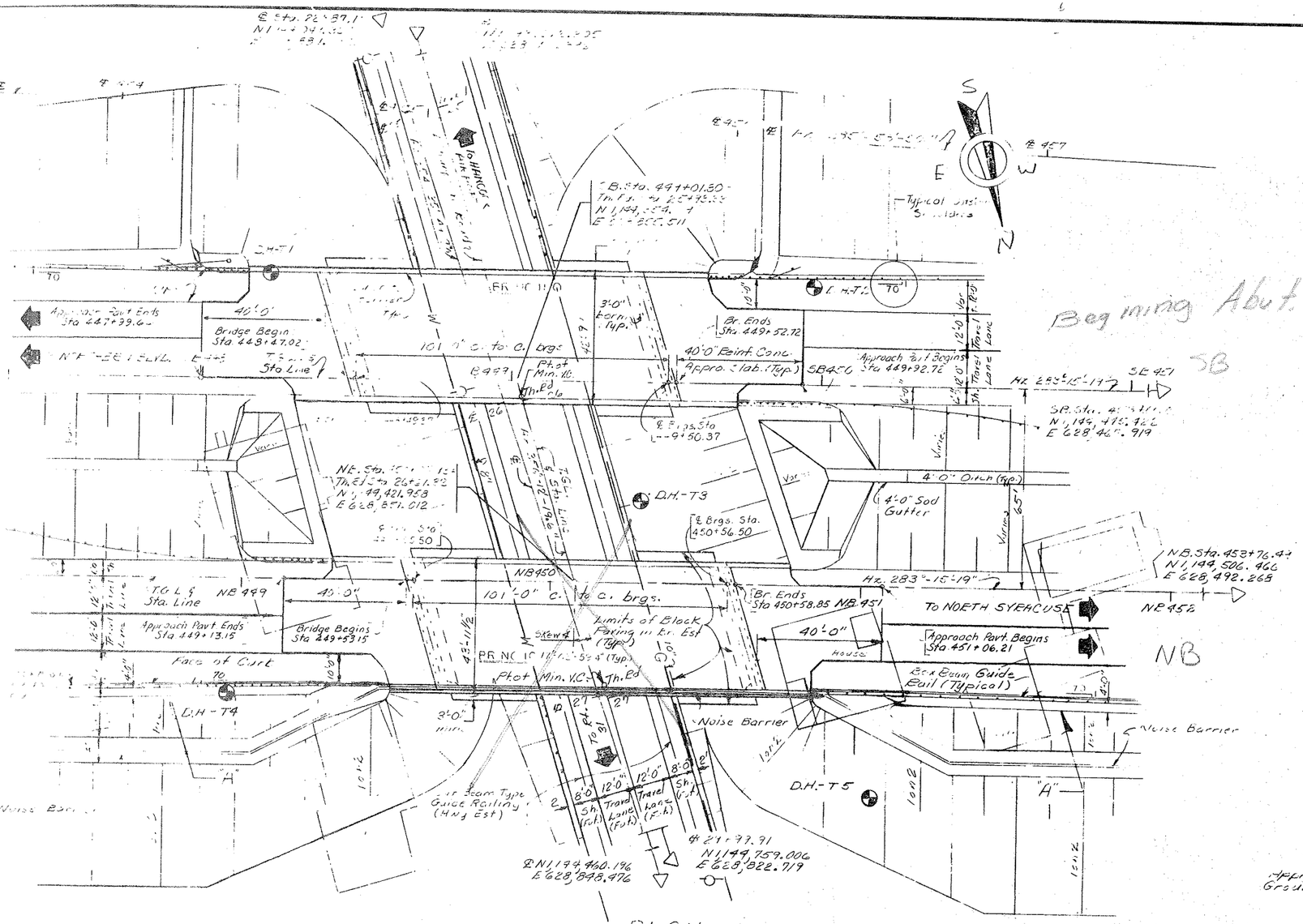

PLAN
SCALE 1" = 20'-0"

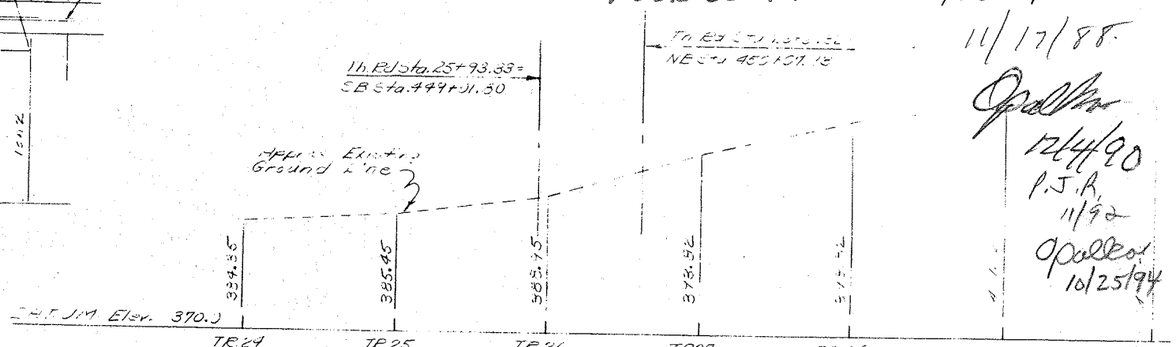

EXISTING THOMPSON RD. PROFILE
SCALE Horiz 1" = 50'
Vert 1" = 10'

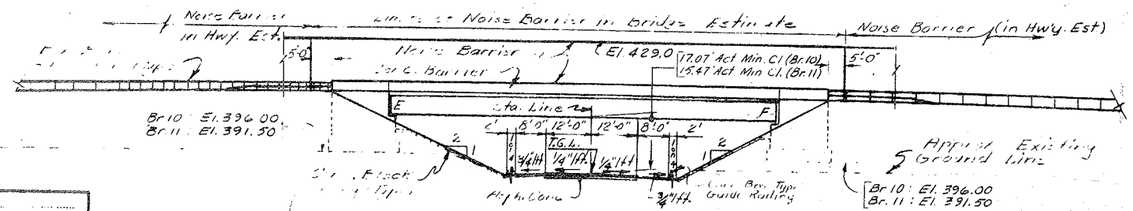

ELEVATION "A"
SCALE 1" = 20'-0"

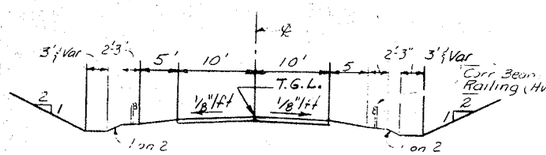

EXISTING THOMPSON RD.
SCALE 1" = 10'-0"

TEAM LEADER B Gulla
DATE 5/87
FIELD VERIFIED V Peter Fiehlman 11/17/88.
Opalka 12/4/90
P.J.R. 11/92
Opalka 10/25/94
V Douglas R. Hillesa 10/16/96
Bopalka 11/4/97
V Francis Cook 8/1/98

Indicates Exist.

MADE.....
ECT ENGINEER.....
ARGE OF.....
NED BY.....
M CHECKED BY.....
LED BY.....
L CHECKED BY A.A. Lis

-182

STATE OF NEW YORK
DEPARTMENT OF TRANSPORTATION
STRUCTURES DESIGN & CONSTRUCTION DIVISION

Bridges X & 11 over Thompson Rd.

PLAN, ELEVATION, PROFILE AND SECTION

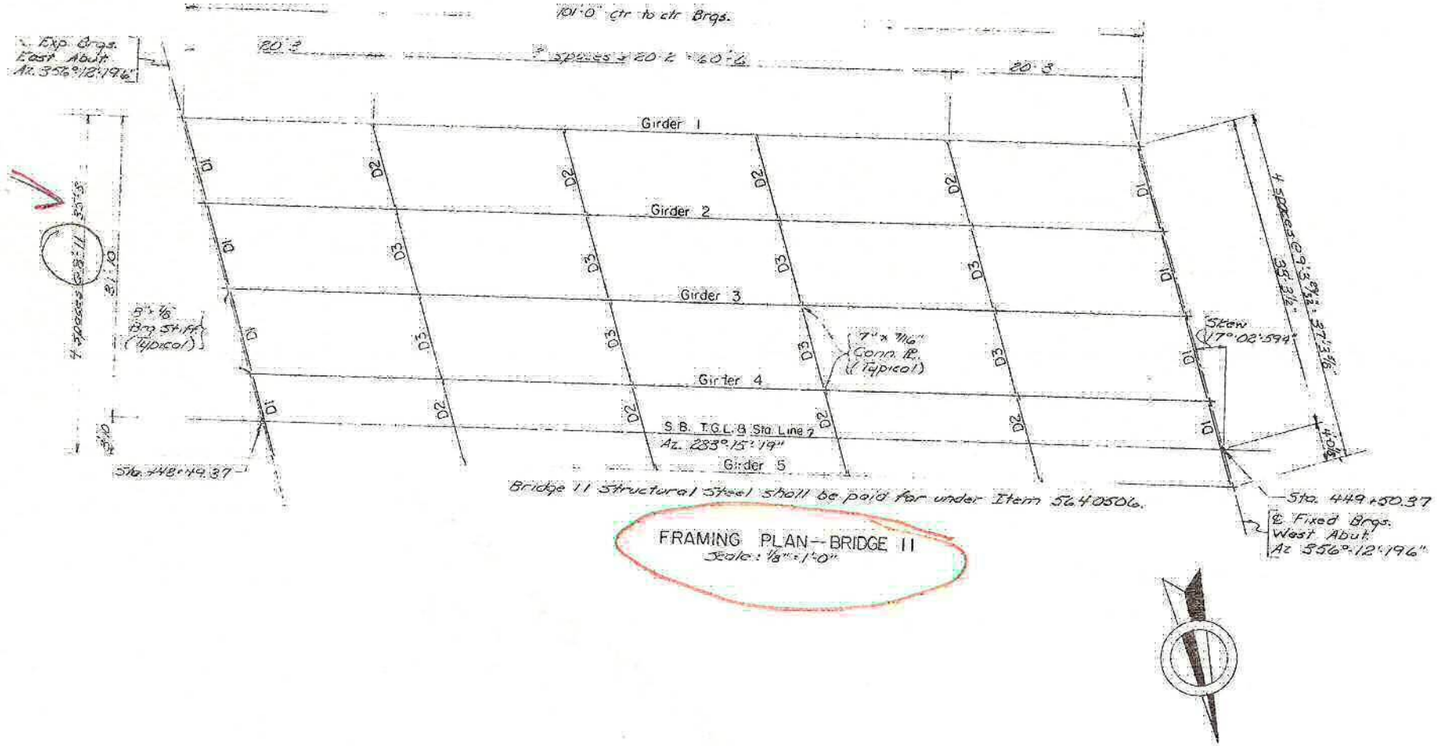

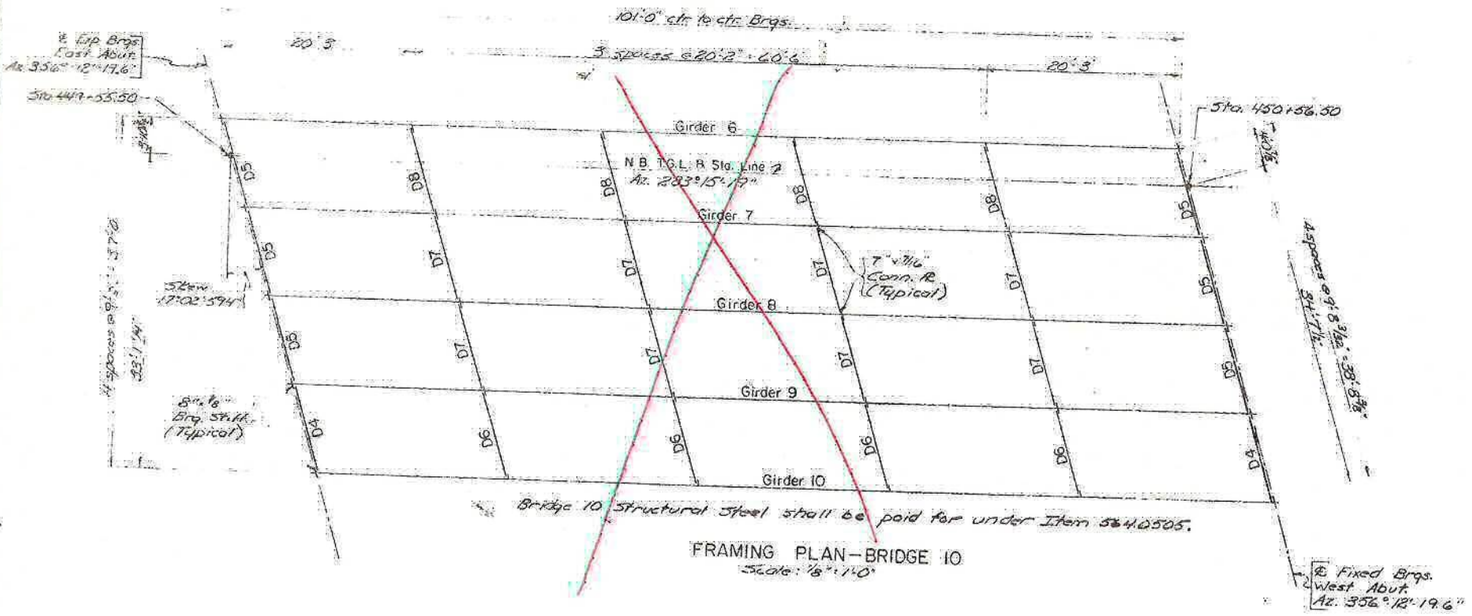

REG. NO. REG. NO.	STATE	FEDERAL AID PROJECT NO.
	NEW YORK	IR-81-2(104)

INTERSTATE RTE. 970 EXTENSION
NORTHERN BLVD. TO BEAR ROAD IN ONONDAGA COUNTY

CAPITAL PROJECT IDENTIFICATION NO. 3[illegible]

DESIGNED BY L.D. Fox DETAILED BY K.J. DESIGN CHECKED BY S.P.H. DETAIL CHECKED BY

STATE OF NEW YORK
DEPARTMENT OF TRANSPORTATION
STRUCTURES DESIGN AND CONSTRUCTION

Bridges X & 11 over Thompson [illegible]

FRAMING PLANS

PROJ. ENG. [illegible] DATE MADE

D25041

FED. RD. REG. NO.	STATE	FEDERAL AID PROJECT NO.	SHEET NO.	SI
	NEW YORK	IR-81-2(154)	300	3

INTERSTATE RTE. 570 EXTENSION (I-481)
NORTHERN BLVD. TO BEAR ROAD INTERCHANGE
ONONDAGA COUNTY

CAPITAL PROJECT IDENTIFICATION NO. 3107.00 (01)

*Location of Lap on alternate bars (See Dwg No. 25 of 38).

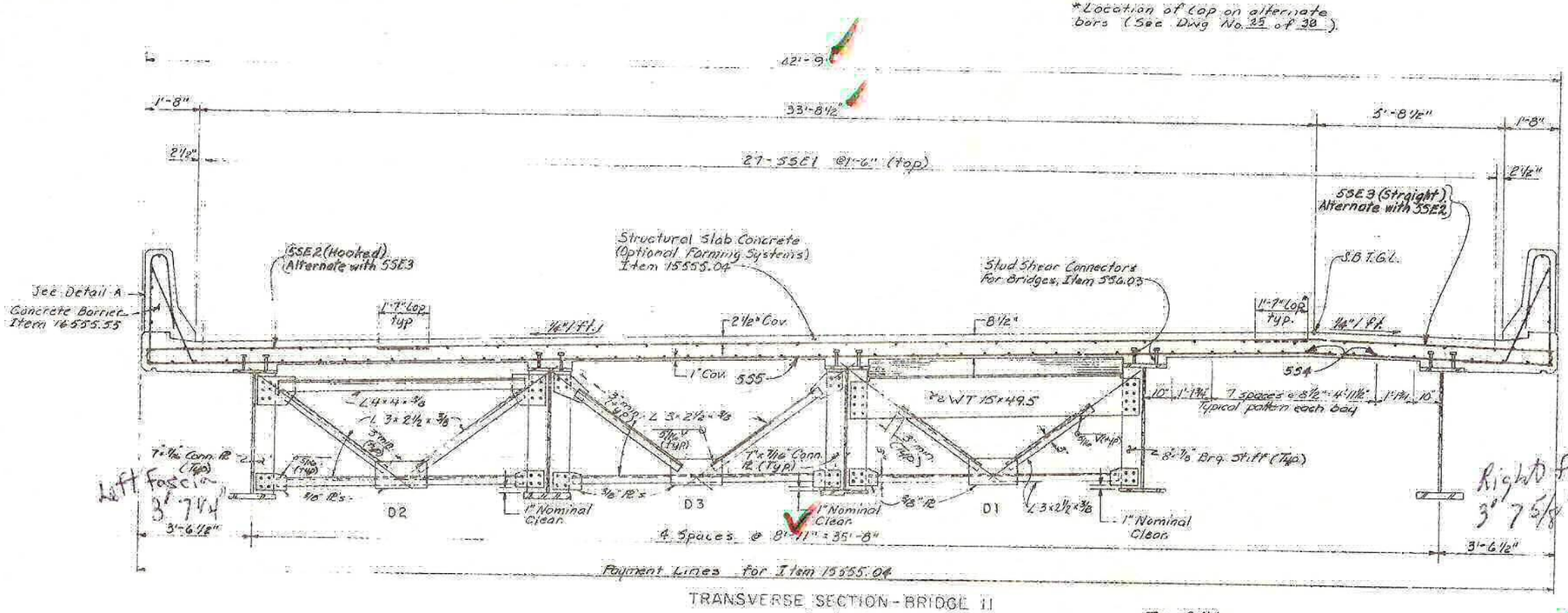

TRANSVERSE SECTION - BRIDGE II
Scale: ⅛"=1'-0"

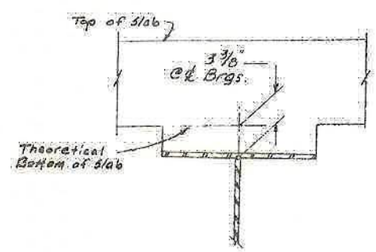

HAUNCH DETAIL
Not to Scale

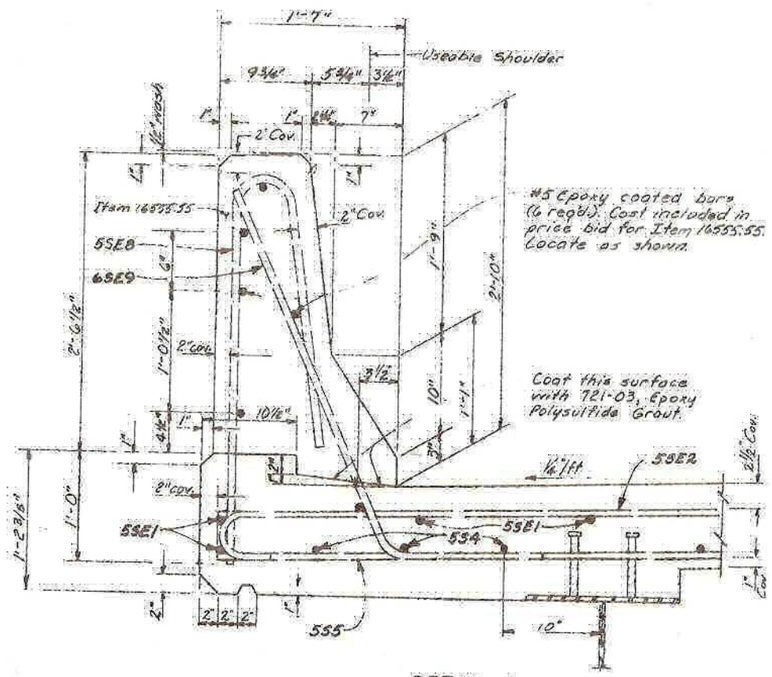

DETAIL A
Scale: 1½"=1'-0"

HAUNCH TABLE BRIDGE II		℄ BRG.	0.1L	0.2L	0.3L	0.4L	0.5L	0.6L	0.7L	0.8L	0.9L	℄ BRG.
Girder 1	(A) Req'd. bottom of slab elevation	409.74	409.69	409.64	409.59	409.53	409.48	409.42	409.36	409.30	409.24	409.17
	(B) Top of steel El. (Field meas.)											
	(C) = (A) - (B)											
	(D) Concrete + S.D.L. Deflection	0	0.11	0.20	0.27	0.32	0.33	0.32	0.27	0.20	0.11	0
	(E) Depth of haunch req'd. = (C)+(D) ft.											
Girder 2	(A) Req'd. bottom of slab elevation	409.91	409.86	409.81	409.76	409.70	409.65	409.59	409.53	409.47	409.41	409.34
	(B) Top of steel El. (Field meas.)											
	(C) = (A) - (B)											
	(D) Concrete + S.D.L. Deflection	0	0.11	0.20	0.27	0.32	0.33	0.32	0.27	0.20	0.11	0
	(E) Depth of haunch req'd. = (C)+(D) ft.											
Girder 3	(A) Req'd. bottom of slab elevation	410.08	410.03	409.98	409.93	409.87	409.82	409.76	409.70	409.64	409.57	409.51
	(B) Top of steel El. (Field meas.)											
	(C) = (A) - (B)											
	(D) Concrete + S.D.L. Deflection	0	0.11	0.20	0.27	0.32	0.33	0.32	0.27	0.20	0.11	0
	(E) Depth of haunch req'd. = (C)+(D) ft.											
Girder 4	(A) Req'd. bottom of slab elevation	410.25	410.20	410.15	410.10	410.04	409.99	409.93	409.87	409.81	409.74	409.68
	(B) Top of steel El. (Field meas.)											
	(C) = (A) - (B)											
	(D) Concrete + S.D.L. Deflection	0	0.11	0.20	0.27	0.32	0.33	0.32	0.27	0.20	0.11	0
	(E) Depth of haunch req'd. = (C)+(D) ft.											
Girder 5	(A) Req'd. bottom of slab elevation	410.27	410.22	410.16	410.11	410.05	410.00	409.94	409.88	409.81	409.75	409.68
	(B) Top of steel El. (Field meas.)											
	(C) = (A) - (B)											
	(D) Concrete + S.D.L. Deflection	0	0.11	0.20	0.27	0.32	0.33	0.32	0.27	0.20	0.11	0
	(E) Depth of haunch req'd. = (C)+(D) ft.											

Note: Computations in the Haunch Table shall be algebraic.

DIAPHRAGM NOTES

4. Where holes are indicated, connections shall be made with 7/8" diameter high-strength bolts.
2. Cross frames may be fabricated to fit the girders in their erected position and cambered shape, but deflected vertically due to steel dead load only.
3. The Contractor may place diaphragms on either side of the bearing stiffeners or stiffener connection plates as necessary to correct alignment provided there will be no interference with other structural details.
4. Tapered or flat shim plates may be used in the connection between skewed diaphragms and the bearing stiffeners or stiffener connection plates. Variable thicknesses of shim plates may be used. The minimum thickness of shim plate shall be 1/8" with a maximum number of three shim plates permitted at any connection. The total thickness of all shim plates used at any connection shall not exceed 1". Shim plates shall have the dimensions of the faying surface. The shim material shall conform to ASTM Designation A36, except that on unpainted structures, the shim material shall conform to ASTM Designation A588. No additional payment will be made for furnishing and placing the shim plates.

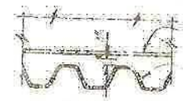

SECTION A-A
Not to Scale

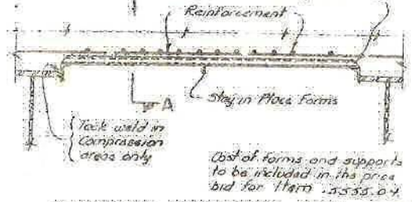

Cost of forms and supports to be included in the price bid for Item 15555.04

PERMANENT CORRUGATED METAL FORMS
(See "DECK FORM OPTIONS" note, Dwg. No. 24 of 38)
Not to Scale

CONCRETE TABLE	
POUR	ITEM 15555.04
Structural Slab	4417 S.F.

For "Deck Form Options" note, see Dwg. No. 24 of 38.

NOTE:
Haunch Table is based upon use of the Girder which would be used with Deck Form Type 2. (See Girder Table, Dwg. No. 21 of 38.)

STATE OF NEW YORK
DEPARTMENT OF TRANSPORTATION
STRUCTURES DESIGN AND CONSTRUCTION DIVISION

Bridge 11 over Thompson Rd.

TRANSVERSE SECTION & HAUNCH TABLE
BRIDGE 11

PROJ. ENG. [illegible]
SQUAD [illegible]

DESIGNED BY Dick Palmer
DETAILED BY Dick Palmer
DESIGN CHECKED BY S.P. Wang
DETAIL CHECKED BY [illegible]

FASCIAE OVERHANG AVERAGES 1'-6 1/2"

BD 170a (7/88)

FED ROAD REG. NO.	STATE	CONTRACT NO.	SHEET NO.	TOTAL SHEETS
1	N.Y.	D259214	362	432

BRIDGE REHABILITATION PROJECT (ELEMENT SPECIFIC)
VARIOUS BRIDGES ON INTERSTATE 481
TOWNS OF DEWITT AND CICERO
ONONDAGA COUNTY
P.I.N. 305613 | B.I.N. ALL BINS

BRIDGE JOINT TABLE

B.I.N. NUMBER	JOINT LOCATION	JOINT SKEW	SPAN(S) LENGTH FOR JOINT (METERS)	JOINT BEND LOCAT'N RT	JOINT BEND LOCAT'N LT	EXISTING JOINT TYPE	PROPOSED JOINT TYPE	CURB TO CURB DISTANCE (METERS) (SEE NOTES)	FASCIA & MEDIAN LENGTH (METERS) LT/RT	TOTAL LENGTH (METERS)	JOINT ITEM NUMBER(S)	DRAWING NUMBER SECT VIEW	DRAWING NUMBER PLAN VIEW	DRAWING NUMBER FASCIA DETAIL
1072530	EAST ABUT.	0°-00'-00"	33.528	N	N	ACJ	MAC-5	15.850	.457/.457	16.764	567.35M	JD-30	JD-29	JD-30
	WEST ABUT.	0°-00'-00"	37.795	N	N	ACJ	MAC-5	15.850	.457/.457	16.764	567.35M	JD-30	JD-29	JD-30
1072571	SOUTH ABUT.	20°-29'-45.2"	44.196	N	N	ACJ	MAC-6	14.481	.488/.488	15.457	567.36M	JD-32	JD-31	JD-32
	NORTH ABUT.	20°-29'-45.2"	———	N	N	ACJ	MAC-1	15.456	.488/.488	16.428	567.31M	JD-32	JD-31	JD-32
1072572	SOUTH ABUT.	21°-09'-2.1"	44.196	N	N	ACJ	MAC-6	12.746	.490/.490	13.726	567.36M	JD-34	JD-33	JD-34
	NORTH ABUT.	21°-09'-2.1"	———	N	N	ACJ	MAC-1	12.746	.490/.490	13.726	567.31M	JD-34	JD-33	JD-34
1072581	SOUTH ABUT.	3°59'-27.5"	37.033	N	N	ACJ	MAC-5	11.917	.458/.458	12.833	567.35M	JD-36	JD-35	JD-36
	NORTH ABUT.	3°-59'-27.5"	———	N	N	ACJ	MAC-1	11.917	.458/.458	12.833	567.31M	JD-36	JD-35	JD-36
1072582	SOUTH ABUT.	3°-51'-57.9"	37.033	N	N	ACJ	MAC-5	11.915	.458/.458	12.831	567.35M	JD-38	JD-37	JD-38
	NORTH ABUT.	3°-51'-57.9"	———	N	N	ACJ	MAC-1	11.915	.458/.458	12.831	567.31M	JD-38	JD-37	JD-38
1072781	EAST ABUT.	16°-26'-24"	———	N	N	ACJ	MAC-1	12.500	.530/.530	13.560	567.31M	JD-40	JD-39	JD-40
	WEST ABUT.	16°-26'-24"	33.635	N	N	ACJ	MAC-5	12.500	.530/.530	13.560	567.35M	JD-40	JD-39	JD-40
1072782	EAST ABUT.	16°-26'-24"	———	N	N	ACJ	MAC-1	13.183	.530/.530	14.243	567.31M	JD-42	JD-41	JD-42
	WEST ABUT.	16°-26'-24"	31.394	N	N	ACJ	MAC-5	12.589	.530/.530	13.649	567.35M	JD-42	JD-41	JD-42
1072791	EAST ABUT.	17°-02'-59.4"	30.785	N	N	ACJ	RCS	12.566	.531/.531	13.628	16567.64M	JD-47	JD-43	JD-47
	WEST ABUT.	17°-02'-59.4"	———	N	N	ACJ	RCS	12.566	.531/.531	13.628	16567.64M	JD-47	JD-43	JD-47
1072792	EAST ABUT.	17°-02'-59.4"	30.785	N	N	ACJ	MAC-5	12.566	.530/.530	14.015	567.35M	JD-44	JD-43	JD-44
	WEST ABUT.	17°-02'-59.4"	———	N	N	ACJ	MAC-1	12.566	.530/.530	14.015	567.31M	JD-44	JD-43	JD-44
1093510	WEST ABUT.	44°-07'-00"	———	N	N	ACJ/ADA	RCS	16.560	.637/.637	17.834	16567.64M	JD-46	JD-45	JD-46
	EAST ABUT.	40°-26'-00"	37.522	N	N	ADA	RADA	15.620	———	15.620	———	JD-46	JD-45	———

LEGEND

EXISTING JOINT TYPE:

ACJ = ARMORED COMPRESSION JOINT SYSTEM
MOD = MODULAR JOINT SYSTEM
MAC = MODIFIED ARMORED COMPRESSION SYSTEM (NO HORIZ. ARMORING ANGLE)
ADA = ARMORED DECK ANGLE
SS = STRIP SEAL JOINT
OPEN = OPEN JOINT

PROPOSED JOINT TYPE:

MAC-1 = MOD. ARM./COMP. SEAL JT. SYS. (A-1)
MAC-2 = MOD. ARM./COMP. SEAL JT. SYS. (A-2)
MAC-5 = MOD. ARM./COMP. SEAL JT. SYS. (A-5)
MAC-6 = MOD. ARM./COMP. SEAL JT. SYS. (A-6)
RCS = REPLACE EXISTING COMPRESSION SEAL
RADA = REMOVE ARMOR DECK ANGLE
MOD-1 = MODULAR JT. SYS. (ONE-CELL)
MOD-2 = MODULAR JT. SYS. (TWO-CELL)

JOINT BEND LOCATION:

N = NO BENDS
CRB = CURB LINE
PAV'T = PAVEMENT

GENERAL NOTES:

- ALL MEASUREMENTS SHALL BE FIELD VERIFIED.
- CURB TO CURB LENGTHS ARE MEASURED ALONG ℄ OF JOINT.
- MULTIPLE DIMENSIONS ARE SHOWN LOOKING UP-STATION, LEFT TO RIGHT.
- ALL DIMENSIONS ARE SHOWN IN METERS.

INFORMATIONAL NOTES:

BIN 1072530 - NO JOINT AT PIER.

BIN 1072791 - REPLACE COMPRESSION SEALS
BEG. ABUT. (EAST), TYPE A-5
END ABUT. (WEST), TYPE A-1

FOR JOINT DETAILS REFER TO THE FOLLOWING DRAWINGS:

DWG. NO. JD-1 - MODIFIED ARMORED COMPRESSION SEAL JOINT SYSTEM.
DWG. NO. JD-24 - ONE-CELL MODULAR JOINT SYSTEM.
DWG. NO. JD-25 - TWO-CELL MODULAR JOINT SYSTEM.

LIST OF BRIDGE JOINT ITEMS USED:

ITEM 566.01M - MODULAR EXP. JOINT SYSTEM ONE-CELL (M)
ITEM 566.02M - MODULAR EXP. JOINT SYSTEM TWO-CELL (M)
ITEM 567.31M - MODIFIED ARMORED JOINT SYSTEM W/ COMP. SEAL TYPE A1 (m)
ITEM 567.32M - MODIFIED ARMORED JOINT SYSTEM W/ COMP. SEAL TYPE A2 (m)
ITEM 567.35M - MODIFIED ARMORED JOINT SYSTEM W/ COMP. SEAL TYPE A5 (m)
ITEM 567.36M - MODIFIED ARMORED JOINT SYSTEM W/ COMP. SEAL TYPE A6 (m)
ITEM 16567.6400001M - REPLACE COMPRESSION SEAL FOR EXISTING BRIDGE JOINTS (m)

ALL DIMENSIONS ARE IN m UNLESS OTHERWISE NOTED

AS BUILT REVISIONS

SIGNATURE ____ DATE ____

INTERSTATE 481 VARIOUS BRIDGES

BRIDGE JOINT TABLE

STATE OF NEW YORK
DEPARTMENT OF TRANSPORTATION

FILENAME	REGION	DATE	DRAWING NO.
305613AJJA1	3	10/02	JT-2

DESIGN SUPERVISOR ____ JOB MANAGER ____ DESIGNED BY ____ DRAFTED BY ____ CHECKED BY ____ ESTIMATED BY ____

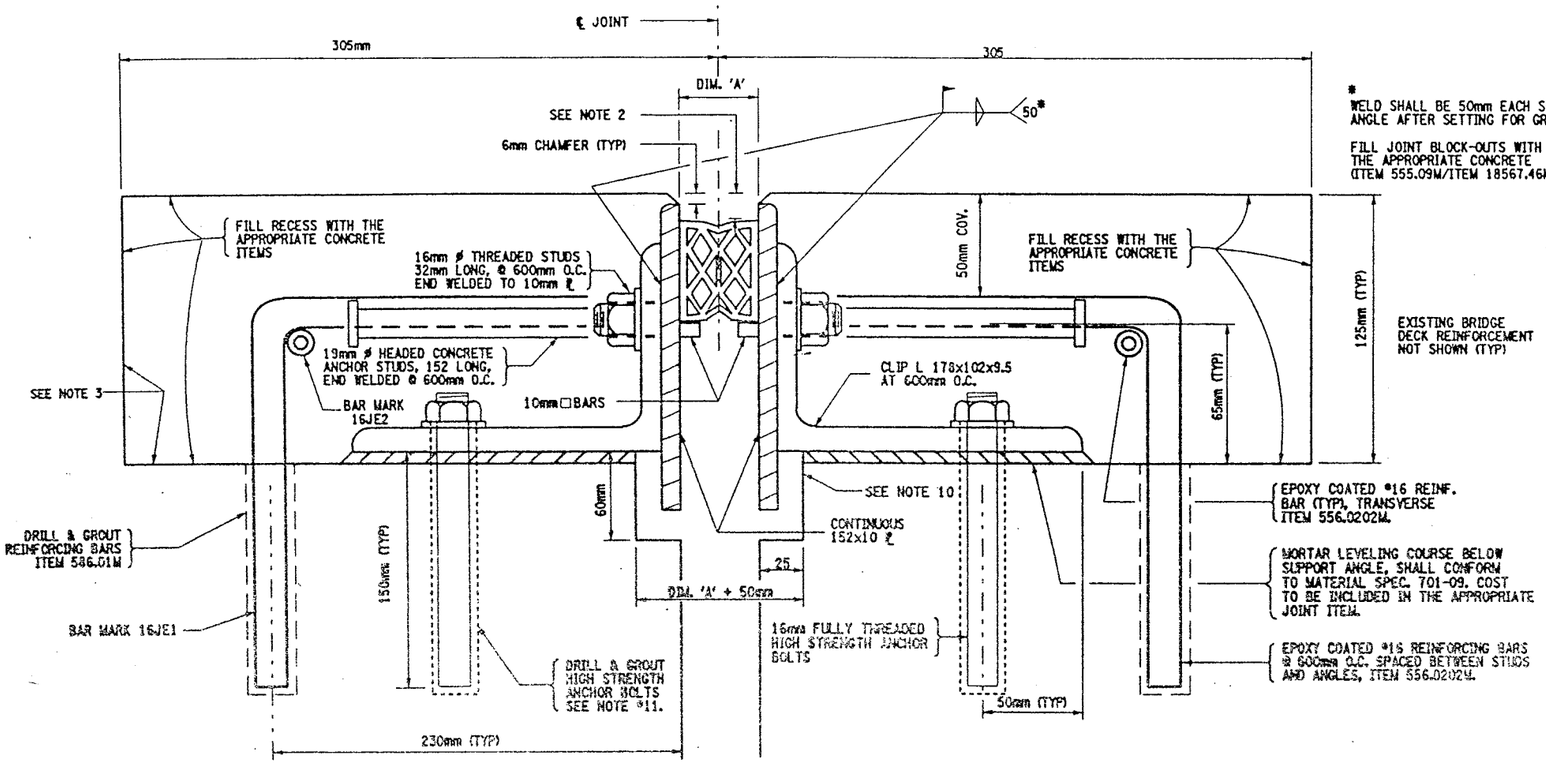

* WELD SHALL BE 50mm EACH SIDE OF ANGLE AFTER SETTING FOR GRADE

FILL JOINT BLOCK-OUTS WITH THE APPROPRIATE CONCRETE (ITEM 555.09M/ITEM 18567.46M)

MODIFIED ARMORED COMPRESSION JOINT DETAIL

FOR INSTALLATION LOCATIONS SEE JOINT TABLE

NOT TO SCALE

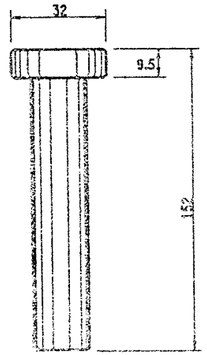

DETAIL OF HEADED CONCRETE ANCHOR STUD

NOT TO SCALE

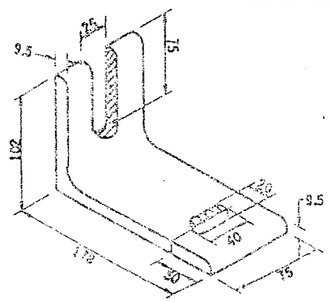

DETAIL OF CLIP ANGLE

NOT TO SCALE

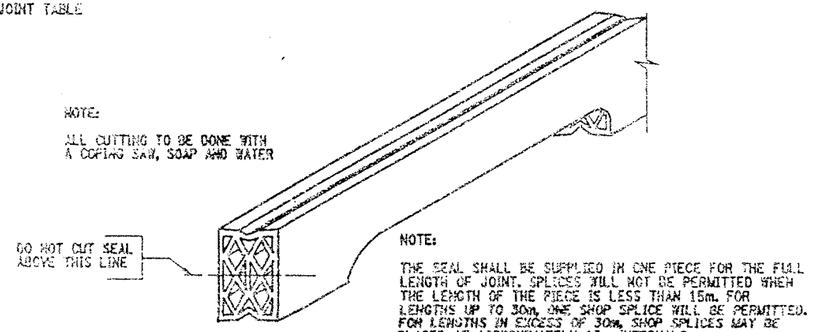

DETAIL FOR CUTTING SEAL

NOT TO SCALE

EPOXY POLYSULFIDE GROUT NOTE:

CONTRACTOR MAY WITH THE APPROVAL OF THE ENGINEER USE MATERIAL SPECIFICATION 721-03 EPOXY POLYSULFIDE GROUT, AT THE RECESSES. INSTEAD OF THE 12 HOUR CONTINUOUS PREWETTING REQUIREMENTS (PROJECT PROPOSAL), CONTRACTOR MUST ENSURE PROPER CONSTRUCTION PRACTICES ARE FOLLOWED WHEN USING THIS GROUT. THE USE OF EPOXY POLYSULFIDE GROUT SHALL BE AT NO ADDITIONAL COST TO THE STATE.

SEALS (mm)			ARMORED JOINT SYSTEM	
TYPE	NOMINAL WIDTH	DIM. "A" @ 20°C.	TYPE	END CONDITION
1	44	25	A1	Fixed End Only
2	51	30	A2	Exp. up to 18 m
3	64	38	A3	Exp. over 18 m to 23 m
4	76	44	A4	Exp. over 23 m to 27 m
5	89	52	A5	Exp. over 27 m to 38 m
6	102	60	A6	Exp. over 38 m to 46 m

Maximum Skew Limits: Fixed End - No Limit
Exp. End - 45° A2 thru A6

LIST OF ITEMS USED:

ITEM 555.09M - STRUCT. CONCRETE, CLASS "HP" (CM)
ITEM 556.0202M - EPOXY COATED BAR REINF. FOR STRUCT. (Kg)
ITEM 567.31M - MOD. ARMORED JOINT SYSTEM W/ COMP. SEAL TYPE A1 (m)
ITEM 567.32M - MOD. ARMORED JOINT SYSTEM W/ COMP. SEAL TYPE A2 (m)
ITEM 567.35M - MOD. ARMORED JOINT SYSTEM W/ COMP. SEAL TYPE A5 (m)
ITEM 567.36M - MOD. ARMORED JOINT SYSTEM W/ COMP. SEAL TYPE A6 (m)
ITEM 18567.46M - ELASTOMERIC CONC. FOR BRIDGE JT. SYSTEMS (M)
ITEM 586.01M - DRILL & GROUT REINF. BARS (mm)

FED ROAD REG. NO.	STATE	CONTRACT NO.	SHEET NO.	TOTAL SHEETS
1	N.Y.	D259214	365	432

BRIDGE REHABILITATION PROJECT (ELEMENT SPECIFIC)
VARIOUS BRIDGES ON INTERSTATE 481
TOWNS OF DEWITT AND CICERO
ONONDAGA COUNTY
P.I.N. 305613 B.I.N. ALL BIN'S

GENERAL NOTES:

1. THE TEMPERATURE OF THE BRIDGE MUST BE TAKEN ON THE STRUCTURAL STEEL SURFACE TO DETERMINE THE TEMPERATURE CORRECTION FOR THE JOINT OPENINGS.
2. THIS DEPTH SHALL BE INDICATED ON THE SHOP DRAWINGS AND SHALL BE SUCH THAT WHEN THE SEAL IS COMPRESSED TO 50% OF ITS NORMAL WIDTH, THE TOP OF THE SEAL SHALL BE NOT LESS THAN 6mm NOR MORE THAN 19mm BELOW THE TOP OF THE ROADWAY.
3. RECESSES RECEIVING ITEM 555.09M. AFTER SURFACE PREPARATION, THOROUGHLY WET THE CONCRETE SURFACE AND ALL POROUS SURFACES TO BE IN CONTACT WITH NEW CONCRETE, FOR 12 HOURS. NOTE THE USE OF MATERIAL SPECIF. 705-22 PORTLAND CEMENT MORTAR BONDING GROUT HAS BEEN ELIMINATED, SEE INSERT IN PROJECT PROPOSAL.
4. A WATER-TIGHT INTEGRITY TEST SHALL BE PERFORMED BY THE CONTRACTOR AT ALL COMPRESSION SEAL JOINT INSTALLATIONS. THE FOLLOWING TEST PARAMETERS SHALL BE INCORPORATED IN THE TEST:
   1. A 15 MINUTE MINIMUM PERIOD OF STANDING WATER, WITH A 25mm MINIMUM DEPTH SHALL BE USED.
   2. IN ADDITION, IN LOCATIONS OF COPED AREAS OF THE SEAL, BENDS, ETC., WATER PRESSURE SHALL BE APPLIED, TO THE SATISFACTION OF THE E.I.C FOR A 15 MINUTE PERIOD.
   3. LIMITS OF TEST AREA SHALL BE FROM FACE OF CURB TO FACE OF CURB ON THE DECK SURFACE.
5. NO PAYMENT WILL BE MADE TO THE CONTRACTOR FOR THE JOINT IF, IN THE OPINION OF THE ENGINEER, THE INSTALLED JOINT LEAKS WITHIN THE 15 MINUTE TEST PERIOD.
6. PRIOR TO THE START OF WORK AT EACH JOINT, THE CONTRACTOR SHALL SUBMIT A WRITTEN PLAN FOR THE SPECIFICS OF THE TESTING, INCLUDING CONTAINMENT OF THE WATER AND THE METHOD TO BE USED FOR ACCESS BY THE E.I.C. TO THE BOTTOM OF THE JOINT BEING TESTED.
7. THE COST OF ALL LABOR, EQUIPMENT AND MATERIALS REQUIRED FOR THE TESTING WHICH INCLUDES, BUT IS NOT LIMITED TO:
   1. A CONTAINMENT SYSTEM FOR THE TEST WATER.
   2. PROVISIONS FOR E.I.C. ACCESS TO THE BOTTOM OF THE JOINT.
   SHALL BE INCLUDED IN THE PRICE BID FOR THE RESPECTIVE JOINT ITEMS.
8. THE COST OF ALL LABOR, EQUIPMENT, AND MATERIALS TO INSTALL THE NEW JOINT SHALL BE INCLUDED IN THE UNIT PRICE BID FOR THE APPROPRIATE JOINT ITEM.
9. MORTAR LEVELING COURSE SHALL CONFORM TO MATERIAL SPECIFICATION 701-09 AND SHALL BE INCLUDED IN THE PRICE BID FOR THE APPROPRIATE JOINT ITEM.
10. THE DIMENSIONS OF THE REMOVAL AREA UNDER THE 152x10 PLATES ARE SHOWN TO ALLOW SPACE FOR THE PLATES TO REST FREELY. IF THERE IS ALREADY ADEQUATE SPACE, NO CONCRETE REMOVAL OR REPLACEMENT IS REQUIRED IN THIS AREA.
11. 16 mm ø ASTM A325M ANCHOR BOLT TO BE DRILLED AND GROUTED IN PLACE IN ACCORDANCE WITH THE REQUIREMENTS OF SUB-SECTION 586-3.02. GROUTING MATERIALS SHALL BE IN ACCORDANCE WITH MATERIALS SUB-SECTION 701-07 ANCHORING MATERIALS-CHEMICALLY CURING. HOLES TO BE DRILLED TO THE DIAMETER AND DEPTH RECOMMENDED BY THE MANUFACTURER OF THE GROUTING MATERIAL (MIN. DEPTH OF 150 mm). THE COST OF THE ANCHORS, INCLUDING DRILLING AND GROUTING, SHALL BE INCLUDED IN THE UNIT PRICE BID FOR THE APPROPRIATE JOINT SYSTEM ITEM.
12. IT IS DESIRABLE TO HAVE THE ARMORED JOINT WITH ITS COMPRESSION SEAL ASSEMBLED IN THE SHOP AND DELIVERED TO THE JOB SITE ALL SET FOR INSTALLATION IN ITS PREFORMED RECESS IN THE STRUCTURAL SLAB. IN CASES WHERE THE ARMORED JOINT CANNOT BE ASSEMBLED IN THE SHOP, DUE TO ITS EXCESSIVE LENGTH CAUSING SHIPPING PROBLEMS, THE JOINT SHALL BE SEALED WITH THE COMPRESSION SEAL BEFORE THE STRUCTURE IS OPENED TO TRAFFIC INCLUDING CONSTRUCTION TRAFFIC, AND BEFORE DIS CONTINUING OPERATIONS WHEN WORK IS SUSPENDED DURING THE WINTER.

ALL DIMENSIONS ARE IN mm UNLESS OTHERWISE NOTED

AS BUILT REVISIONS

SIGNATURE DATE

INTERSTATE 481

COMPRESSION SEAL JOINT DETAILS

STATE OF NEW YORK
DEPARTMENT OF TRANSPORTATION

FILENAME	REGION	DATE	DRAWING NO.
305613AJJA1	3	10/02	JD-1

CHECKED BY
DRAFTED BY
ESTIMATED BY
DESIGNED BY
JOB MANAGER
DESIGN SUPERVISOR
CHECKED BY

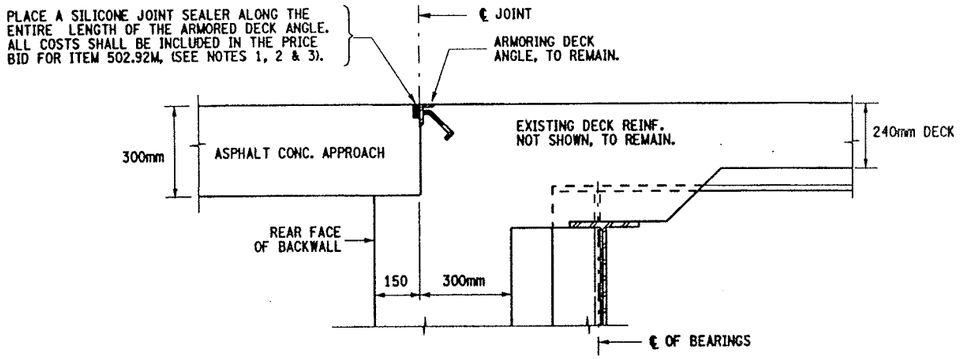

TYPICAL SECTION VIEW
EXISTING ARMORED DECK ANGLE AT ABUTMENT

BIN 1093520 - W. ABUT. (BEG. ABUT.)
BIN 1093540 - N. ABUT. (END ABUT.)
NOT TO SCALE

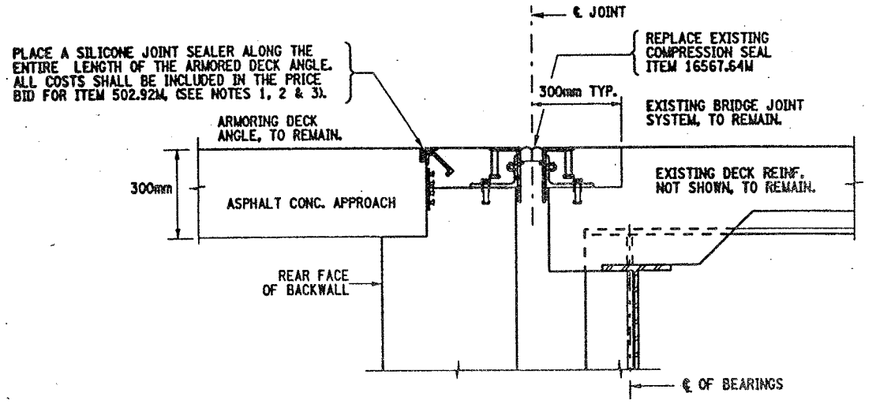

TYPICAL SECTION VIEW
EXISTING ARMORED JOINT SYSTEM AT ABUTMENT

BIN 1093520 - E. ABUT. (END ABUT.)
BIN 1093540 - S. ABUT. (BEG. ABUT.)
NOT TO SCALE

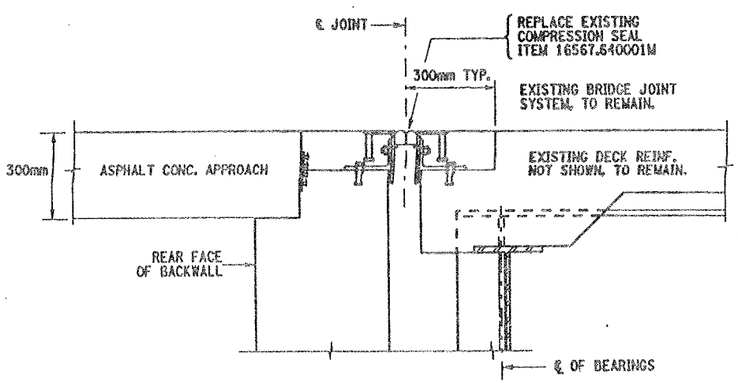

TYPICAL SECTION VIEW
EXISTING ARMORED JOINT SYSTEM AT ABUTMENT

BIN 1072791 - BOTH ABUTMENTS

NOT TO SCALE

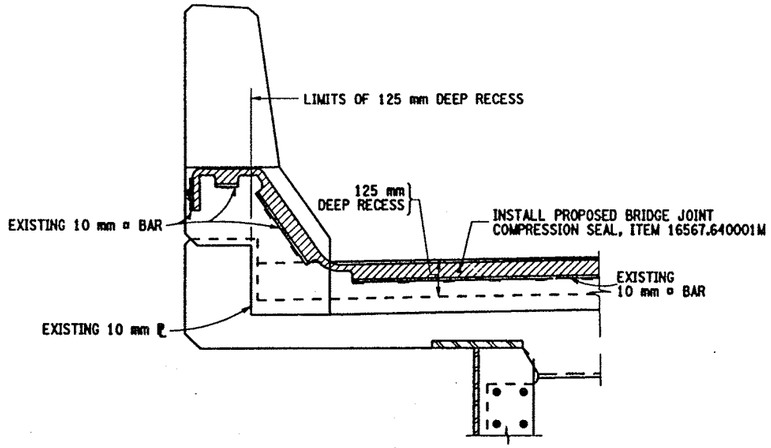

PROPOSED JOINT SEAL
TYPICAL (CONCRETE PARAPET)

BIN 1072791 - REPLACE SEAL AT BOTH ABUTMENTS

NOT TO SCALE

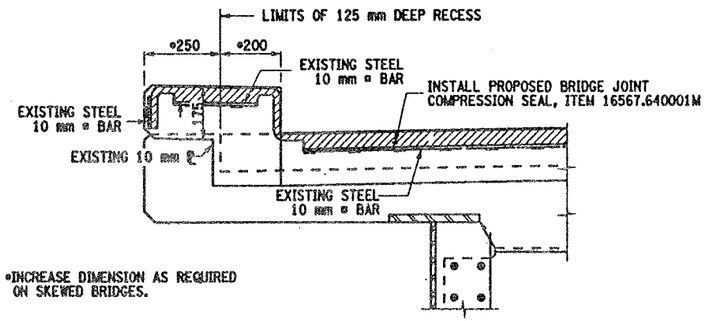

•INCREASE DIMENSION AS REQUIRED ON SKEWED BRIDGES.

PROPOSED JOINT SEAL
TYPICAL (BRUSH CURB)

BIN 1093520 - EAST ABUTMENT
BIN 1093540 - SOUTH ABUTMENT

NOT TO SCALE

LIST OF ITEMS USED:

ITEM 502.92M - SEALING TRANSVERSE JOINTS @@
ITEM 16567.640001M - REPLACE COMPRESSION SEAL FOR EXISTING BRIDGE JOINT @@

FED ROAD REG. NO.	STATE	CONTRACT NO.	SHEET NO.	TOTAL SHEETS
1	N.Y.	D259214	411	432

BRIDGE REHABILITATION PROJECT (ELEMENT SPECIFIC)
VARIOUS BRIDGES ON INTERSTATE 481
TOWNS OF DEWITT AND CICERO
ONONDAGA COUNTY
P.I.N. 305613 | B.I.N. VARIOUS

DETAILS ON THIS SHEET PERTAIN TO BIN'S 1072791, 1093520 & 1093540.

NOTES:

1) TO SEAL THE INTERFACE BETWEEN THE EXISTING ASPHALT APPROACH AND THE EXISTING ARMOR DECK ANGLE, USE A SILICONE JOINT SEALER FROM THE MATERIALS BUREAU APPROVED LIST.

2) THE SILICONE JOINT SEALER SHALL BE PLACED TRANSVERSELY FOR THE ENTIRE LENGTH OF THE ARMORED DECK ANGLE.

3) PRIOR TO PLACEMENT OF THE SILICONE JOINT SEALER THE AREA SHALL BE CLEANED AND FREE OF ANY LOOSE MATERIAL TO THE SATISFACTION OF THE ENGINEER.

4) REFER TO DWG. NO. JT-2 AND JT-3 FOR ADDITIONAL INFORMATION.

5) NO PLAN VIEW SHOWN FOR THESE STRUCTURES.

6) REFER DWG. NO. JD-43, FOR ADDITIONAL INFORMATION BIN 1072791.

WORK TO BE DONE:

BIN 1072791 -

REPLACE EXISTING COMPRESSION SEALS AT BOTH ABUTMENTS. BEG. ABUT. (WEST) EXISTING TYPE A-1 ARMORED JOINT SYSTEM END ABUT. (EAST) EXISTING TYPE A-5 ARMORED JONIT SYSTEM

BIN 1093520 -

BEG. ABUTMENT (WEST ABUT.) - EXISTING ARMORED DECK ANGLE, TO REMAIN. PLACE SILICONE SEALER MATERIAL.

END ABUTMENT (EAST ABUT.) - EXISTING TYPE A-5 ARMORED JOINT SYSTEM WITH COMPRESSION SEAL AND ARMORED DECK ANGLE TO REMAIN. REPLACE COMPRESSION SEAL AND PLACE SILICONE SEALER MATERIAL.

BIN 1093540 -

BEG. ABUTMENT (SOUTH ABUT.) - EXISTING TYPE A-5 ARMORED JOINT SYSTEM WITH COMPRESSION SEAL AND ARMORED DECK ANGLE TO REMAIN. REPLACE COMPRESSION SEAL AND PLACE SILICONE SEALER MATERIAL.

END ABUTMENT (NORTH ABUT.) - EXISTING ARMORED DECK ANGLE, TO REMAIN. PLACE SILICONE SEALER MATERIAL.

TIMBER BARRIER:

BIN 1072791 SB - SOUTH FASCIA (LEFT SIDE) PARAPET HAS A TIMBER NOISE BARRIER ATTACHED TO THE BACK SIDE OF THE PARAPET. THIS TIMBER NOISE BARRIER TO REMAIN IT MAY BE NECESSARY TO TEMPORARILY REMOVE THE SUPPORT BRACKETS TO FACILITATE INSTALLATION OF THE PROPOSED BRIDGE JOINT SEAL.

ANY ADDITIONAL SUPPORT TO THE TIMBER NOISE BARRIER DEEMED NECESSARY BY THE ENGINEER, DURING THIS REMOVAL OF THE SUPPORT BRACKETS SHALL BE INCLUDED IN THE PRICE BID FOR ITEM 16567.640001M.

ALL DIMENSIONS ARE IN mm UNLESS OTHERWISE NOTED

AS BUILT REVISIONS

SIGNATURE DATE

I-690 EB RAMP TO I-481 NB & I-481 OVER THOMPSON RD
WN LINE OVER I-481 SB
BRIDGE JOINT DETAILS

STATE OF NEW YORK
DEPARTMENT OF TRANSPORTATION

FILENAME	REGION	DATE	DRAWING NO.
305613AJJA1	3	10/02	JD-47

ESTIMATED BY ____ DRAFTED BY ____ CHECKED BY ____
DESIGN SUPERVISOR ____ JOB MANAGER ____ DESIGNED BY ____

FED ROAD REG. NO.	STATE	CONTRACT NO.	SHEET NO.	TOTAL SHEETS
1	N.Y.	D259214	412	432

BRIDGE REHABILITATION PROJECT (ELEMENT SPECIFIC)
VARIOUS BRIDGES ON INTERSTATE 481
TOWNS OF DEWITT AND CICERO
ONONDAGA COUNTY
P.I.N. 305613 B.I.N. 1093550

DESIGN SUPERVISOR ____ JOB MANAGER ____ DESIGNED BY ____ ESTIMATED BY ____ DRAFTED BY ____ CHECKED BY ____

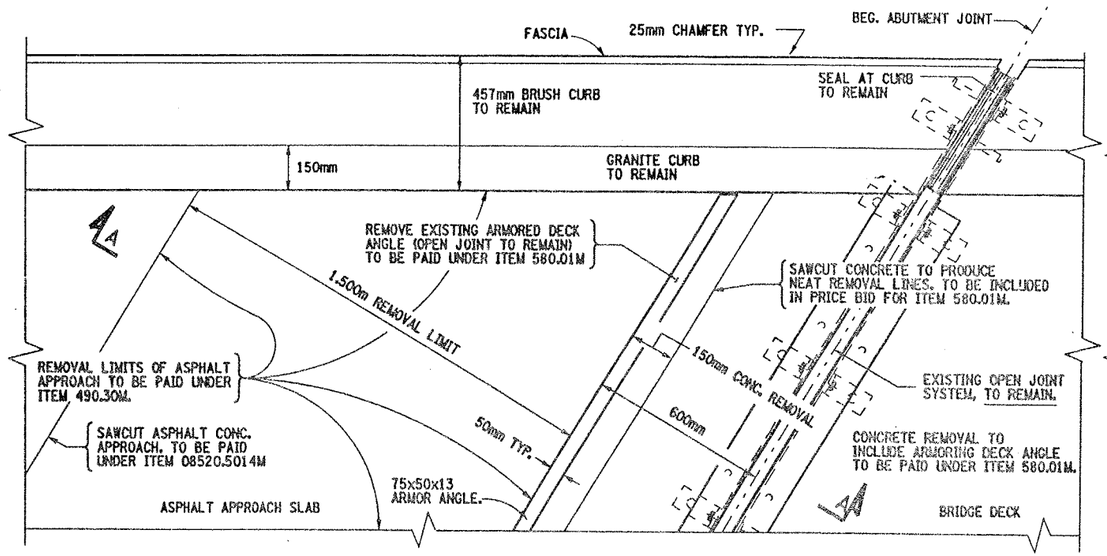

EXISTING BEG. ABUTMENT JOINT PLAN VIEW

BIN 1093550 - SOUTH ABUT.

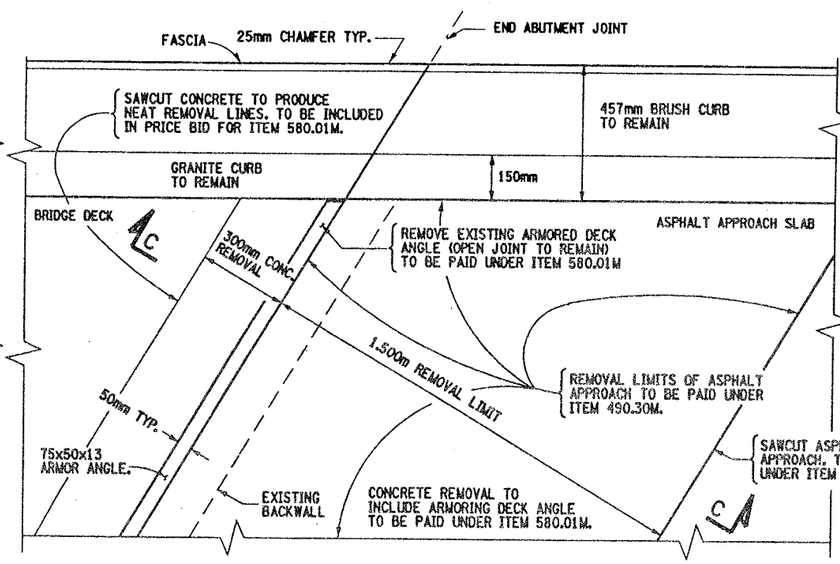

EXISTING END ABUTMENT JOINT PLAN VIEW

BIN 1093550 - NORTH ABUT.

NOTES:

1. REMOVAL OF ARMORING DECK ANGLE SHALL BE FROM CURB TO CURB.
2. FOR SECTION VIEWS SEE DWG. NO. JD-49.
3. BOTH ABUTMENTS HAVE 51°-00'-00" SKEW. ORIGINAL CONTRACT NUMBER FISH 70-7.
4. END ABUTMENT A PORTION OF THE ARMORING DECK ANGLE HAS BEEN REMOVED BY STATE MAINT. FORCES. WHERE THE DECK ANGLE HAS BEEN REMOVED ELASTOMERIC CONCRETE HAS BEEN PLACED IN THE HEADER, THIS MAY INCREASE THE REMOVAL DIFFICULTY. REMOVAL COSTS TO BE INCLUDED IN THE PRICE BID FOR ITEM 580.01M.
5. LEFT SIDE OF DECK SHOWN, RIGHT SIDE IDENTICAL.
6. SAW CUTTING OF CONCRETE SHALL BE INCLUDED IN PRICE BID FOR ITEM 580.01M.
7. REFER TO DWG. NO. JT-3, FOR ADDITIONAL DETAILS.

WORK TO BE DONE:

BEGINNING ABUTMENT (SOUTH ABUT.) - REMOVE ARMORING DECK ANGLE, REPAIR THE CONCRETE WHERE THE ANGLE WAS REMOVED AND REPAIR ASPHALT APPROACH (OPEN JOINT TO REMAIN). ALSO CLEAN THE EXISTING DRAINAGE SYSTEM, SEE CLEAN DRAINAGE SYSTEM NOTE & DETAILS ON DWG. NO. JD-49.

END ABUTMENT (NORTH ABUT.) - REMOVE ARMORING DECK ANGLE, REPAIR THE CONCRETE WHERE THE ANGLE WAS REMOVED AND REPAIR ASPHALT APPROACH.

ITEMS USED:

ITEM 490.30M	- MISC. COLD MILLING OF BIT. CONC. (SM)
ITEM 08520.5014M	- SAWCUTTING BIT. CONC. (M)
ITEM 555.09M	- STRUCT. CONCRETE, CLASS "HP" (CM)
ITEM 556.0202M	- EPOXY-COATED BAR REINFORCEMENT FOR STRUCT. (Kg)
ITEM 580.01M	- REMOVAL OF STRUCT. CONCRETE (CM)

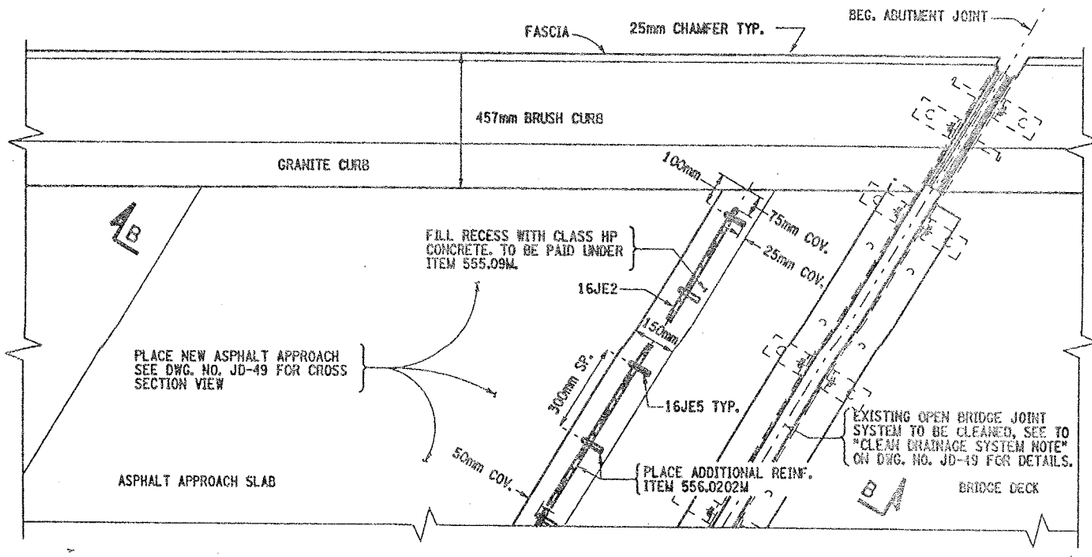

PROPOSED BEG. ABUTMENT JOINT PLAN VIEW

BIN 1093550 - SOUTH ABUT.

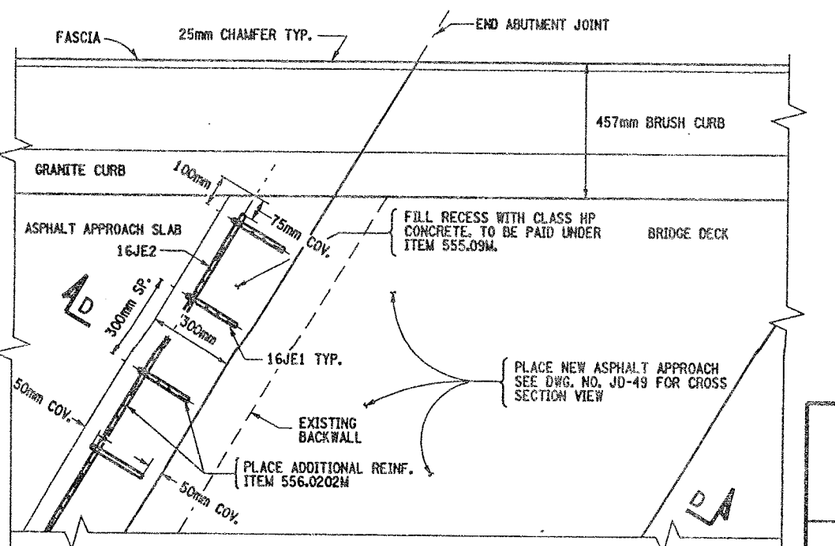

PROPOSED END ABUTMENT JOINT PLAN VIEW

BIN 1093550 - NORTH ABUT.

ALL DIMENSIONS ARE IN mm UNLESS OTHERWISE NOTED

AS BUILT REVISIONS

SIGNATURE DATE

INTERSTATE 481 OVER W.B. CONNECTOR

BRIDGE JOINT DETAILS

STATE OF NEW YORK
DEPARTMENT OF TRANSPORTATION

FILENAME	REGION	DATE	DRAWING NO.
305613AJJA1	3	10/02	JD-48

BIN: 1072791
I481 SB / Thompson Rd

DECK DETERIORATION PLAN

NOT TO SCALE

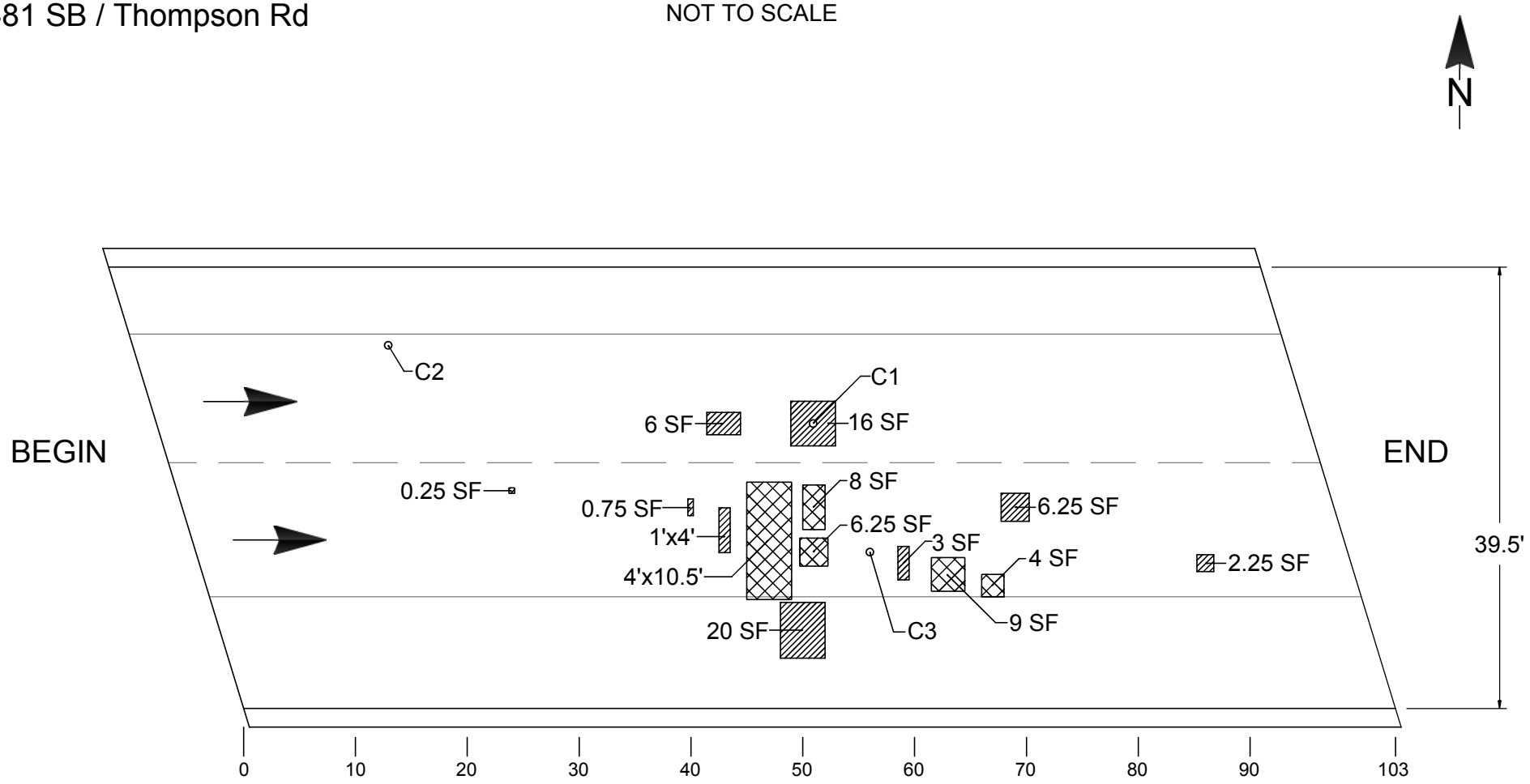

TOTAL DAMAGED AREA EQUALS 127.75 SF WHICH IS 3.1% OF DECK SURFACE

LEGEND

- Hollow Concrete
- Patch
- Coring location
- Crack

IN-DEPTH PHOTO DOCUMENTATION

BIN: 1072791
I481 SB / Thompson Rd

IN-DEPTH INSPECTION
PHOTO LOCATION PLAN

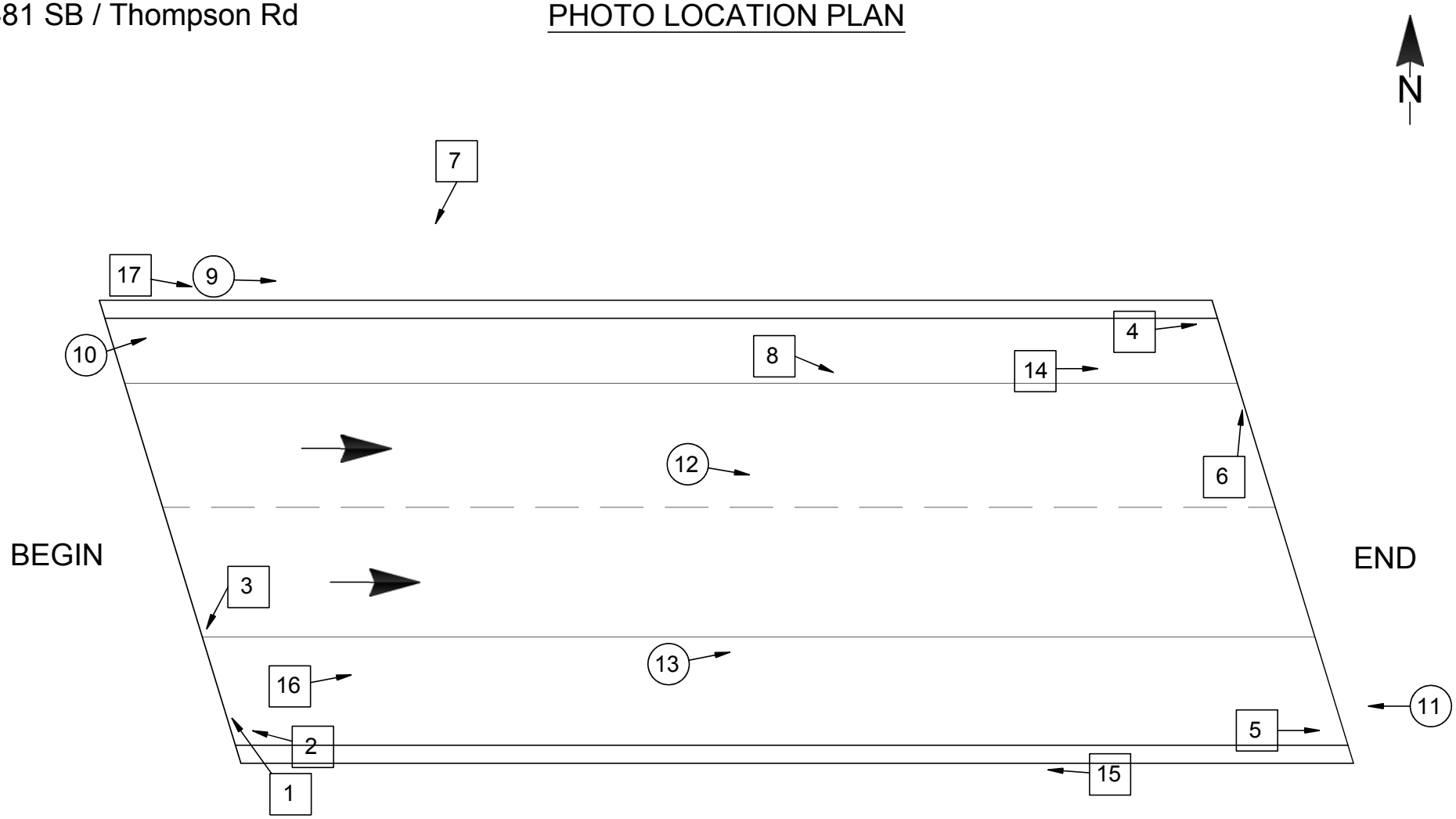

LEGEND	
(XX)	Photo Above Deck
[XX]	Photo Below Deck

In-Depth Inspection Photos I-481 SB over Thompson Rd., BIN 1072791



DESCRIPTION: BEGIN PEDESTAL 5

PHOTO 1



DESCRIPTION: BEGIN BACKWALL AND DECK AT RIGHT

PHOTO 2



DESCRIPTION: BEGIN BACKWALL AT G4

PHOTO 3



DESCRIPTION: END BACKWALL AND DECK AT LEFT

PHOTO 4



DESCRIPTION: END BACKWALL AND DECK AT RIGHT

PHOTO 5



DESCRIPTION: END BACKWALL AT G2

PHOTO 6



DESCRIPTION: BEGIN ABUTMENT

PHOTO 7



DESCRIPTION: END ABUTMENT

PHOTO 8



DESCRIPTION: LEFT FASCIA (B-E)

PHOTO 9

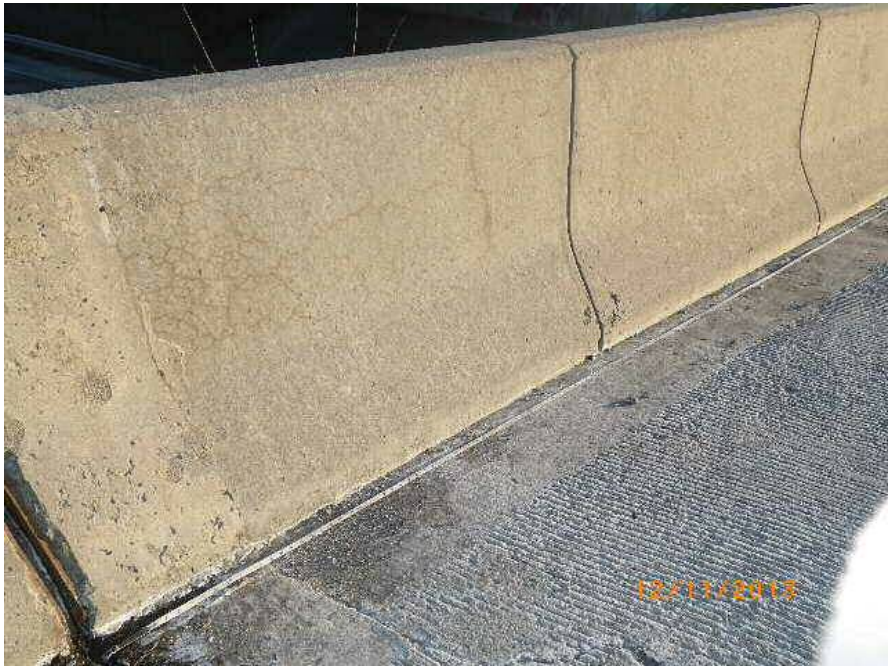

DESCRIPTION: BEGIN LEFT PARAPET

PHOTO 10



DESCRIPTION: TOP OF DECK FROM END

PHOTO 11



DESCRIPTION: LEFT LANE NEAR MIDSPAN (B-E)

PHOTO 12



DESCRIPTION: RIGHT LANE NEAR MIDSPAN (B-E)

PHOTO 13



DESCRIPTION: BAY 1 AT END

PHOTO 14



DESCRIPTION: RIGHT FASCIA (E-B)

PHOTO 15



DESCRIPTION: FRAMING (B-E)

PHOTO 16



DESCRIPTION: G1 (B-E)

PHOTO 17

DESCRIPTION:

PHOTO 18

ASBESTOS SAMPLING SURVEY

Asbestos Sampling Survey

Location:

BIN 1072791
Interstate Route I-481 South Bound
over Thompson Road

Prepared for:

New York State
Department of Transportation

PIN 3056.13.111

LaBella Project No. 201001

August 2001

Table of Contents

Page

I. Project Summary 1

II. Site Description 1

III. Inspection Procedures 1

IV. Results 2

Certification 2

Figures and Table

I. Project Summary

In accordance with conditions of Term Agreement D012606, LaBella Associates, P.C. conducted an asbestos sampling survey of the Interstate Route I-481 south bound bridge over Thompson Road. Based on laboratory analyses of bulk samples collected, no asbestos-containing materials were identified.

II. Site Description

The Site is located in Onondaga County, New York. For the purpose of this report, the Site consists of the Interstate Route I-481 south bound bridge over Thompson Road. (See attached FIGURE 1 - Site Location Map).

III. Inspection Procedures

The following procedures were used to obtain the data for this Report:

A. A review of record drawings supplied by Region 3 personnel and a visual inspection of the subject structure were conducted to identify potential visible/accessible sources of asbestos-containing materials. Observations and notes were made to provide a description of the structure, and an estimate of the approximate amount, length, or area of ACM present.

B. Physical or operational constraints, which might affect the removal of the ACM, were identified and reported.

C. Bulk samples of suspected ACM were collected during the site inspection of the subject structure. Samples were taken from each homogeneous area that may contain ACM.

D. Samples were submitted for analysis. Preliminary PLM analyses of NOB materials were performed by LaBella Laboratories, a NYSDOH approved laboratory, to determine the presence and percentage of asbestos in each sample. TEM analyses of NOB materials, if necessary, were performed by AMA Analytical, Inc.

E. Lab results were used to determine the approximate location, type, and amount of the verified ACM.

F. A drawing of the structure at the Site was created, in order to show sample locations and the approximate locations and amounts of confirmed ACM observed in accessible locations.

Only accessible areas were inspected. Inaccessible areas, such as areas within the bridge or the approaches to the bridge were not included in this inspection. No investigation was conducted by LaBella Associates to determine the presence of underground utilities on or in the immediate vicinity of the Site. Actual sample locations are shown in the attached FIGURE 2. Results of bulk sample analyses are tabulated in the attached TABLE.

IV. Results

BIN 1072791 Interstate Route I-481 South Bound over Thompson Road

Based on laboratory analyses of bulk samples collected, no asbestos-containing materials were identified.

Certification

LaBella Associates, P.C. certifies the accuracy of this report, to the best of our knowledge, based on the information collected as described in the Inspection Procedures Section of this investigation.

Figures & Table

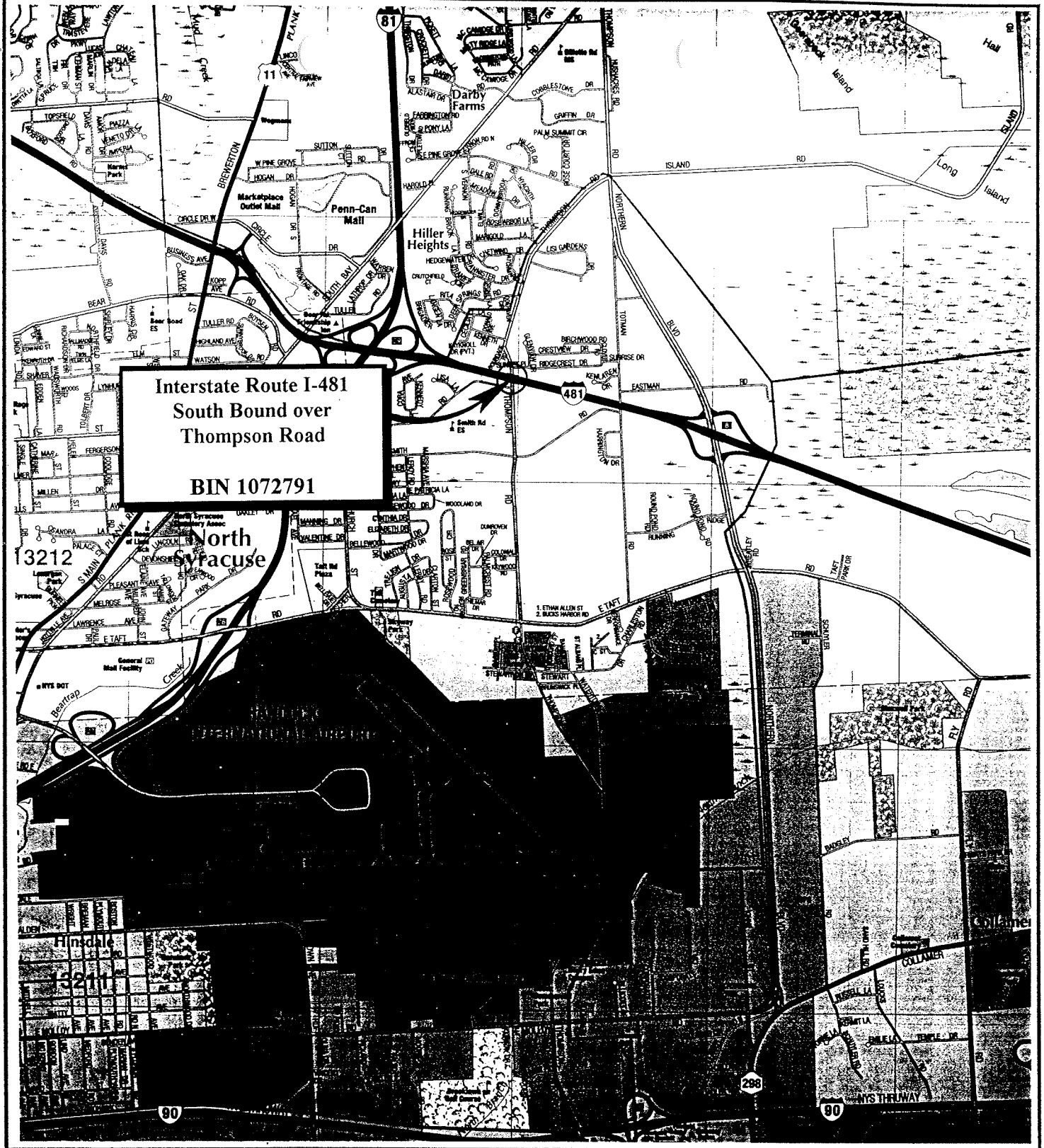

N

FIGURE 1
Site Location Map

Interstate Route I-481 South Bound over Thompson Road
Onondaga County, New York

LABELLA

PROJECT NO. 201001

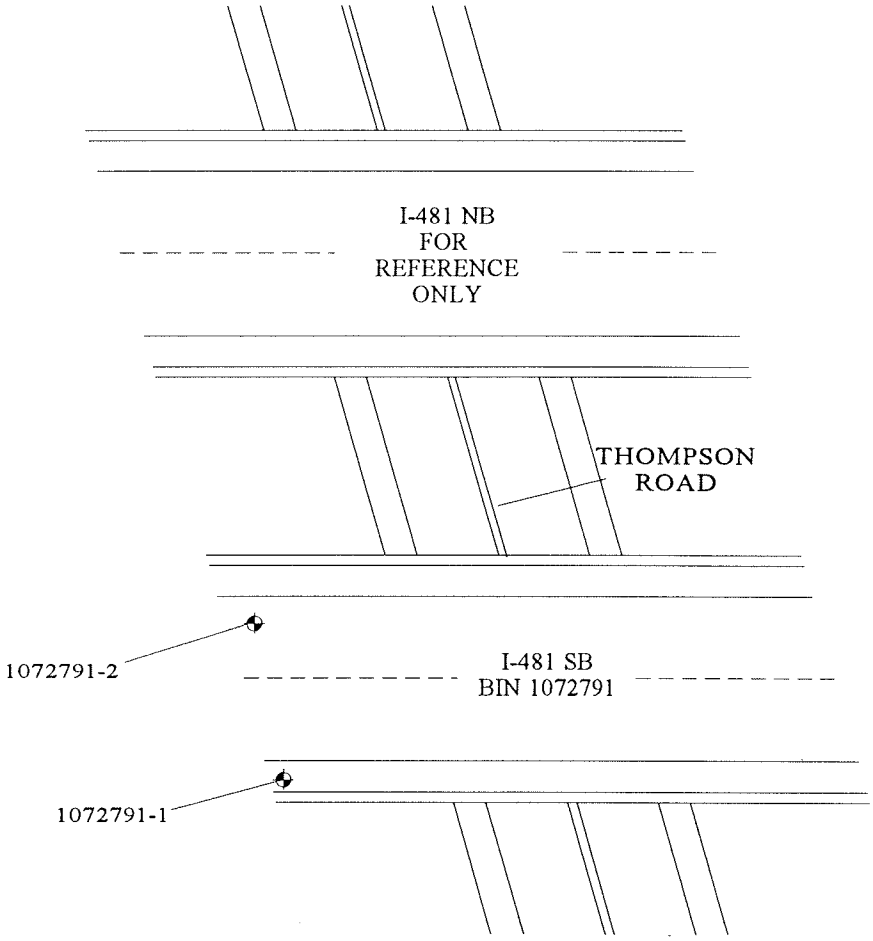

NOTE: NO ASBESTOS-CONTAINING MATERIALS IDENTIFIED.

LEGEND

◆ 1072791-1 SAMPLE LOCATION

NORTH

PROJECT TITLE: ASBESTOS SAMPLING SURVEY 19 BRIDGES ALONG INTERSTATE I-481 ONONDAGA COUNTY, NEW YORK	PROJECT NO. 201001 PIN 3056.13.111
FIGURE TITLE: FIGURE 2 BIN 1072791 I-481 SB OVER THOMPSON ROAD SAMPLE LOCATIONS & CONFIRMED ACM	NOT TO SCALE DATE: AUGUST, 2001

Bulk Sample Results Table

Asbestos Sampling Survey
BIN 1072791
Interstate Route I-481 South Bound
over Thompson Road
Onondaga County, New York
LaBella Project # 201001
PIN 3056.13.111

Sample #	Sample Location	Type of Material	Results % Asbestos	Amount of Material	Specification Item No.
1072791-1	East End of Bridge Beneath Bearing	Bearing Pad	None Detected	N/A	N/A
1072791-2	East End of Bridge on Back Wall	Gray Masonry Coating	None Detected	N/A	N/A

LATEST BIENNIAL INSPECTION REPORT

Inspection Date: 6/8/2012 RC: 33 BIN: 1072791

Bridge Ratings

Carried: 481I 481I33012136 Crossed: THOMPSON RD CheckValue: 1,783,242,715

Inspection Agency: 10 - NYSDOT Type of Inspection: 1 - BIENNIAL
GTMS: A02 -- Unpainted Steel - Stringer/Multi-Beam or Girder
POSTINGS: See Gen Rec Page 1 for Postings at time of inspection.
Further Investigation Needed: No
State Highway Number: 70-7 Milepoint: 14.99 AADT/Yr: 14378 / 2002
Orientation: 3 - East Political Unit: 0161 - Town of CICERO Year Built: 1986
Total Spans: 1 Ramp Bridge Attached To Span: NA BIN: NA
General Recommendation: 6 Computed Condition Rating: 5.603

Abutment Ratings:	**Beg Abut**	**End Abut**
Joint with Deck	5	5
Bearings, Bolts, Pads	6	6
Seats and Pedestals	6	6
Backwall	6	5
Stem (Breastwall)	6	6
Erosion or Scour	6	6
Footings	9	9
Piles	8	8
Recommendation	6	6

Wingwall Ratings:	**Beg Abut**	**End Abut**
Walls	6	6
Footings	9	9
Erosion or Scour	6	6
Piles	8	8

Channel Ratings:	**Channel**
Stream Alignment	8
Erosion and Scour	8
Waterway Opening	8
Bank Protection	8

Approach Ratings:	**Approaches**
Drainage	5
Embankment	6
Settlement	6
Erosion	5
Pavement	4
Guide Railing	6

Number of Flags Issued:

RED: 0 Yellow: 0 Safety: 0

Vulnerability Reviews Recommended: 1=Yes, 2=No, 3=NA, X=NotActive

Hydraulic: 3	Overload: X	Steel: 2
Collision: 2	Concrete: X	Seismic: X

Inspector's Signature: CheckValue: 1,783,242,715 Date: 6/8/2012

Peter Riehlman,PE () (Inspector ID:3000052)

Signed copy of this inspection report is available in the appropriate NYSDOT Regional Office

Reviewed By: Date: 8/7/2012

James R. Manning,PE () (QC ID:3000023)

Signed copy of this inspection report is available in the appropriate NYSDOT Regional Office

Inspection Date: 6/8/2012 RC: 33 BIN: 1072791

Span Ratings

Carried: 481I 481I33012136 Crossed: THOMPSON RD CheckValue: 1,783,242,715

Deck Element Ratings:	**001**
Wearing Surface	4
Curbs	8
Sidewalks, Fascias	6
Railings, Parapets	5
Scuppers	8
Gratings	8
Median	8
Mono Deck Surface	4

Superstructure Ratings:	**001**
Structural Deck	5
Primary Members	6
Secondary Members	6
Paint	4
Joints	8
Recommendation	6

Pier Ratings:	**001**
Bearings, Bolts, Pads	8
Pedestals	8
Top of Cap or Beam	8
Stem Solid Pier	8
Cap Beam	8
Pier Columns	8
Footings	8
Erosion or Scour	8
Piles	8
Recommendation	8

Utility Ratings:	**001**
Lighting	8
Sign Structure	8
Utilities and Support	8

Field Notes:

Field Date	Arrival	Departure	Temp (C)	Temp (F)	Weather Conditions
6/8/2012	9:00:00 AM	11:30:00 AM		70	ptly. cldy

Inspection Date: 6/8/2012 RC: 33 BIN: 1072791

Inspection Notes

Carried: 481I 481I33012136 Crossed: THOMPSON RD CheckValue: 1,783,242,715

Note ID: 331210727910000

Approaches: Pavement -- Rated 4, Was 4
Referenced Photos: "1"
2012- Concrete approach slabs are cracking along joint header with small spalls developing.
Minor asphalt cracking at edges of slabs.

Note ID: 331210727910001

Span 001 -- Deck Elements: Wearing Surface -- Rated 4, Was 4
Span 001 -- Deck Elements: Mono Deck Surface -- Rated 4, Was 4
Referenced Photos: "2"
2012-Single 30" by 2.5" pothole partially filled with asphalt in monodeck near center right of deck. 4 other large patches on the monodeck.

Note ID: 331210727910002

Span 001 -- Superstructure: Paint -- Rated 4, Was 4
Referenced Photos: "3"
2012-Left outer fascia web has dark coarse flakes of weathering steel for full height by full length.

Upper surface of right bottom flange of right fascia girder also has an accumulation of coarse flakes and scaling of web.

Inspection Date: 6/8/2012 RC: 33 BIN: 1072791

Inspection Photos in Photo Number Order

Carried: 481I 481I33012136 Crossed: THOMPSON RD CheckValue: 1,783,242,715

Beg appr pavt transition looking Lt

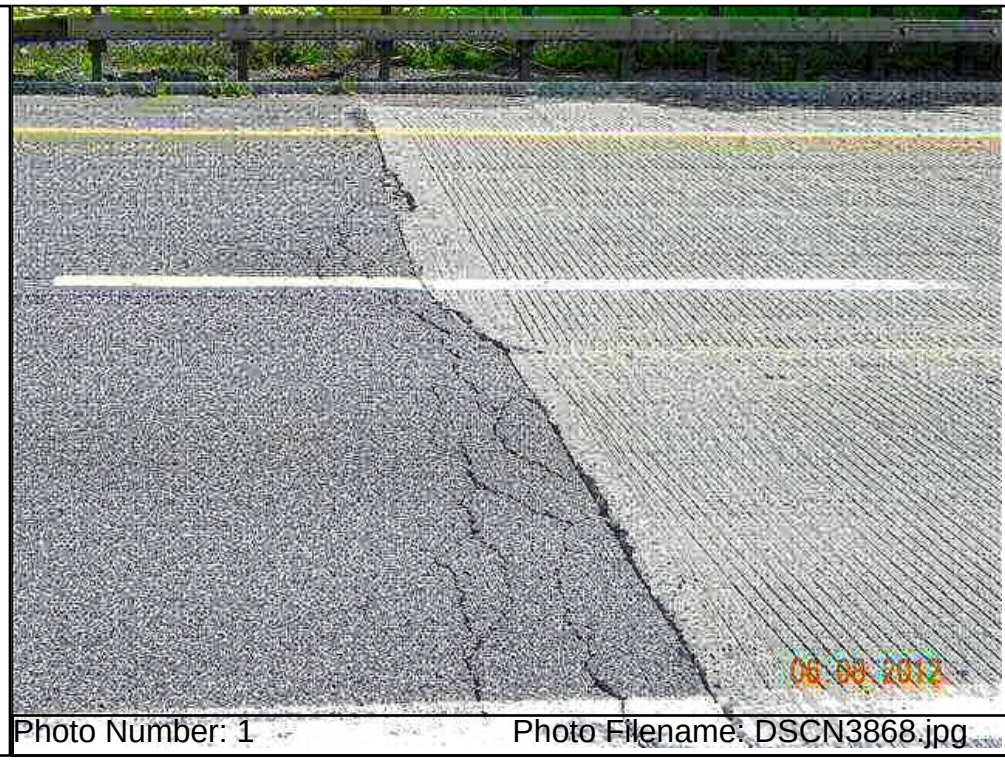

Photo Number: 1 Photo Filename: DSCN3868.jpg

WS Rt lane near mid-span looking Lt

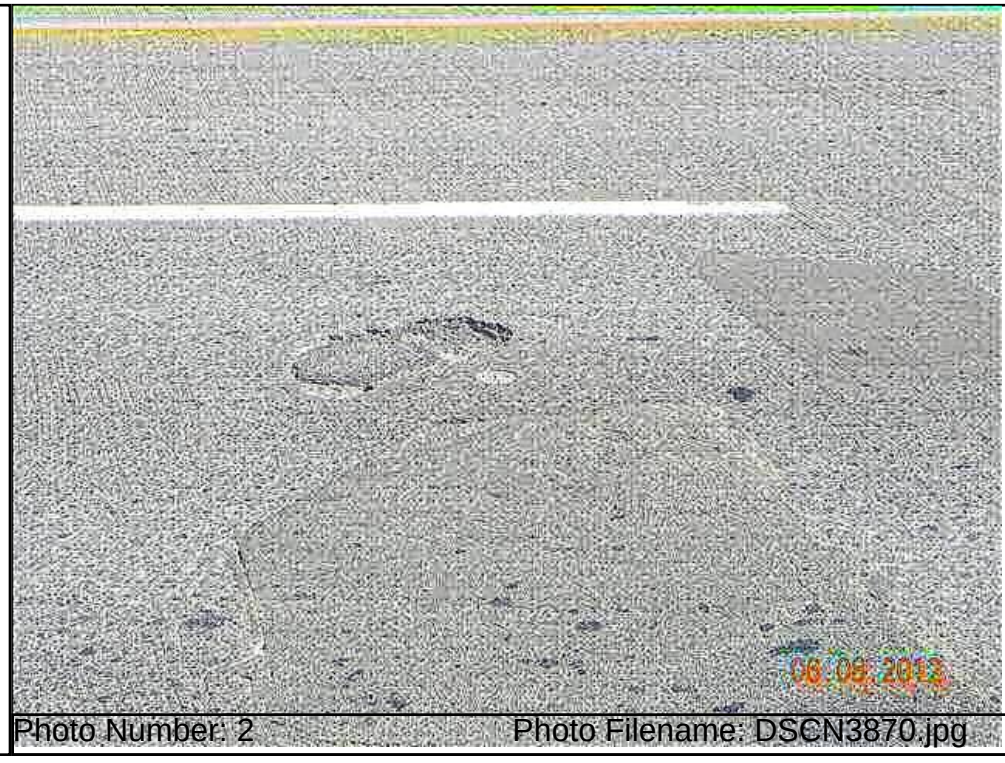

Photo Number: 2 Photo Filename: DSCN3870.jpg

Inspection Date: 6/8/2012 RC: 33 BIN: 1072791

Inspection Photos in Photo Number Order

Carried: 481I 481I33012136 Crossed: THOMPSON RD CheckValue: 1,783,242,715

Beg Rt fascia paint



Photo Number: 3 Photo Filename: DSCN3867.jpg

No Photo

Inspection Date: 6/8/2012 RC: 33 BIN: 1072791

Inspection Sketches in Sketch SysID Order

Carried: 481I 481I33012136 Crossed: THOMPSON RD CheckValue: 1,783,242,715

Sketch ID: 331210727910000 Sketch Filename: LdRatNCL.12

General Sketch for Bridge
Referenced Photos:

Region 3 LoadRatingFieldCheckForm

NYSDOT BRIDGE INSPECTION REPORT			
SHEET	1	OF	1

LOAD RATING FIELD CHECK FORM

BIN:	1034410		Insp. Date:	04/30/2010

Dead Load - Note Changes since Last load Rating or state "NONE":

NONE

Section Loss -Note Changes since Last load Rating or state "NONE":

NONE

Additional Notes:

NONE

Attachments:

Team Leader: Peter Riehlman

Inspection Date: 6/8/2012 RC: 33 BIN: 1072791

Gen. Rec., Postings, Federal Ratings, etc.

Carried: 481I 481I33012136 Crossed: THOMPSON RD CheckValue: 1,783,242,715

Overall Condition:

GENERAL RECOMMENDATION: 6

Computed Condition Rating: 5.603

Problems Requiring Action:

NO Further Investigation Needed

NO Flags Issued

POSTINGS:

Inspector Confirmed existing Posting data as correct.
Posted Vertical Clearance ON the bridge is: No Posting
Posted Vertical Clearance UNDER the bridge is: No Posting
No Load Restriction is posted on this bridge

Overloads Observed:

NO Overload Vehicles were observed on this bridge

FEDERAL RATINGS:

NBI Deck Condition: 7
NBI Superstruct Condition: 7
NBI Substruct Condition: 7
NBI Channel Condition: N
NBI Culvert Condition: N

Diving Inspection Needs:

Diving Inspection Required? No Date of Last Diving Inspection: No Date

Inventory Problems:

Inventory Problems Exist? No

Miscellaneous:

Time Required to Inspect Bridge: 3 Hours

Lane Closure Needs: None Required

No Railroad Flagging Required

No Pedestrian Fence

No Snow Fence

The BIN Plate is in OK condition

Inspection Date: 6/8/2012 RC: 33 BIN: 1072791

Gen. Rec., Postings, Federal Ratings, etc.

Carried: 481I 481I33012136 Crossed: THOMPSON RD CheckValue: 1,783,242,715

Special Emphasis Inspection Required:

Non-Redundant/Fracture Critical Members - No
Pin and Hangers - No
Fatigue-Prone Welds - No
Non-Categorized Fatigue-Prone Details - No
Other (Specified in Text) - No

Special Emphasis Details:

No Special Emphasis Inspection Required.

General Notes To the Next Inspector:

Bin Plate located at beg right backwall.

No impacts to steel.

Improvements Observed:

Inspection Date: 6/8/2012 RC: 33 BIN: 1072791

Review Progress and Personnel Present at Inspection

Carried: 481I 481I33012136 Crossed: THOMPSON RD CheckValue: 1,783,242,715

Inspection Submission Status:

Submitted to QC Engineer on: 6/19/2012
QC Submission Number: 353206

QC Review Completed: 8/7/2012
QC Engineer: James R. Manning

Submitted to Liaison Engineer on: 8/8/2012
Liaison Submission Number: 53214

Liaison Review Completed: 8/9/2012
Liaison Engineer: TODD M. HERMANN

Submitted for BIIS Processing on: 8/9/2012
BIIS Submission Number: .kp1

Current Status: Keypunched, Sent to BIIS
Check Value: 1,783,242,715

Personnel Present During Inspection:

Peter Riehlman - Team Leader
Rebecca Maurer - Assistant Team Leader

Inspection Date: 6/8/2012 RC: 33 BIN: 1072791

Inspection Access Requirements

Carried: 481I 481I33012136 Crossed: THOMPSON RD CheckValue: 1,783,242,715

Equipment Required for Inspection

Access Requirement Changes WERE Noted During This Inspection.
This Listing is from the Inspection.

ACCESS CATEGORIES FOR ENTIRE BRIDGE
Required: Walking

ACCESS CATEGORIES FOR SPAN 1
Required: Walking

Inspection Date: 6/8/2012 RC: 33 BIN: 1072791

Culvert Measurements

Carried: 481I 481I33012136 Crossed: THOMPSON RD CheckValue: 1,783,242,715

Culvert Measurements

NO CULVERT DATA FOR BIN 1072791

Standard Photos **RC: 33 BIN: 1072791**

Carried: 481I 481I33012136 Crossed: THOMPSON RD

1072791_LOCATION_MAP.JPG

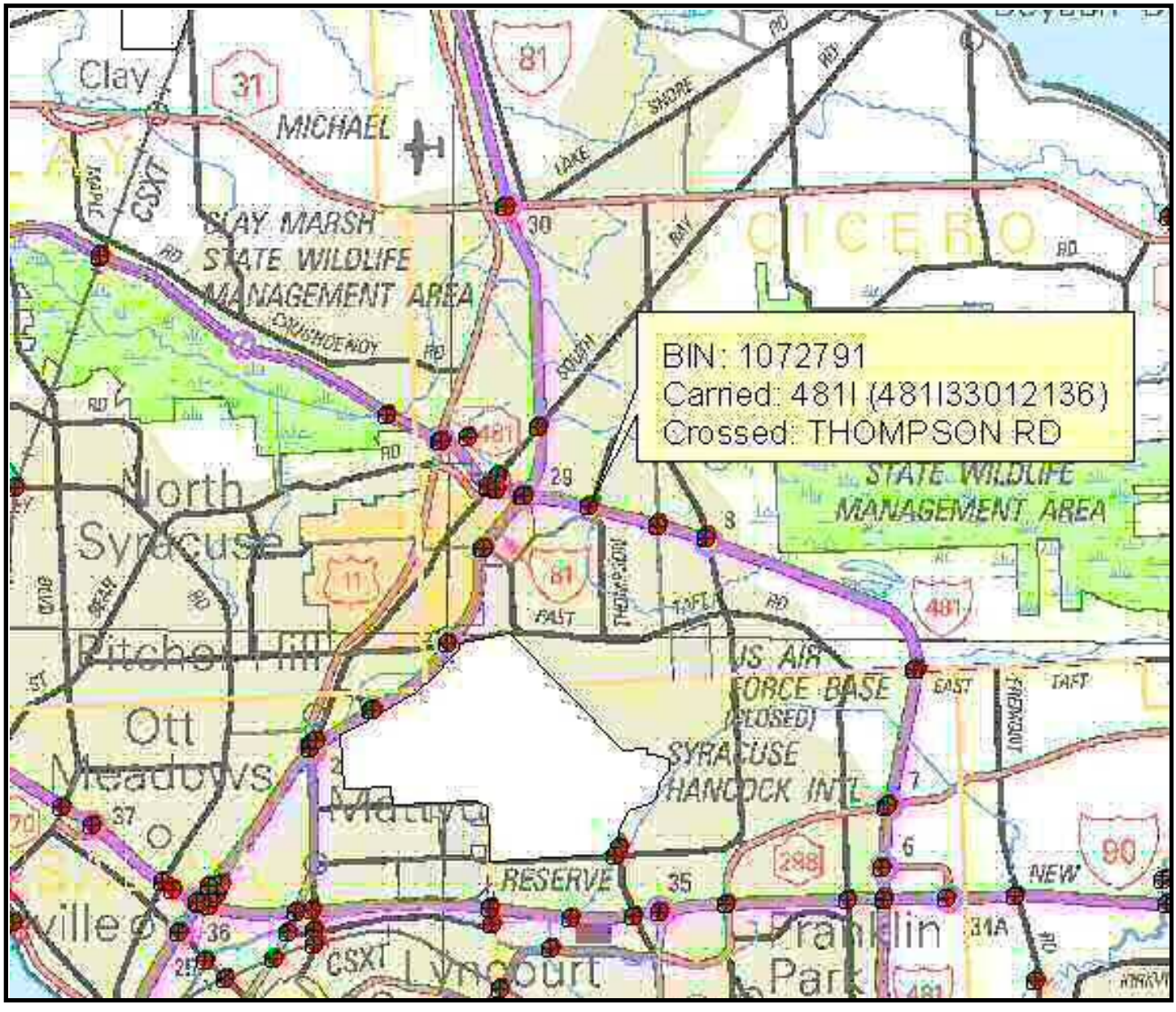

Standard Photos **RC: 33 BIN: 1072791**

Carried: 481I 481I33012136 Crossed: THOMPSON RD

1072791_QUAD_MAP.JPG

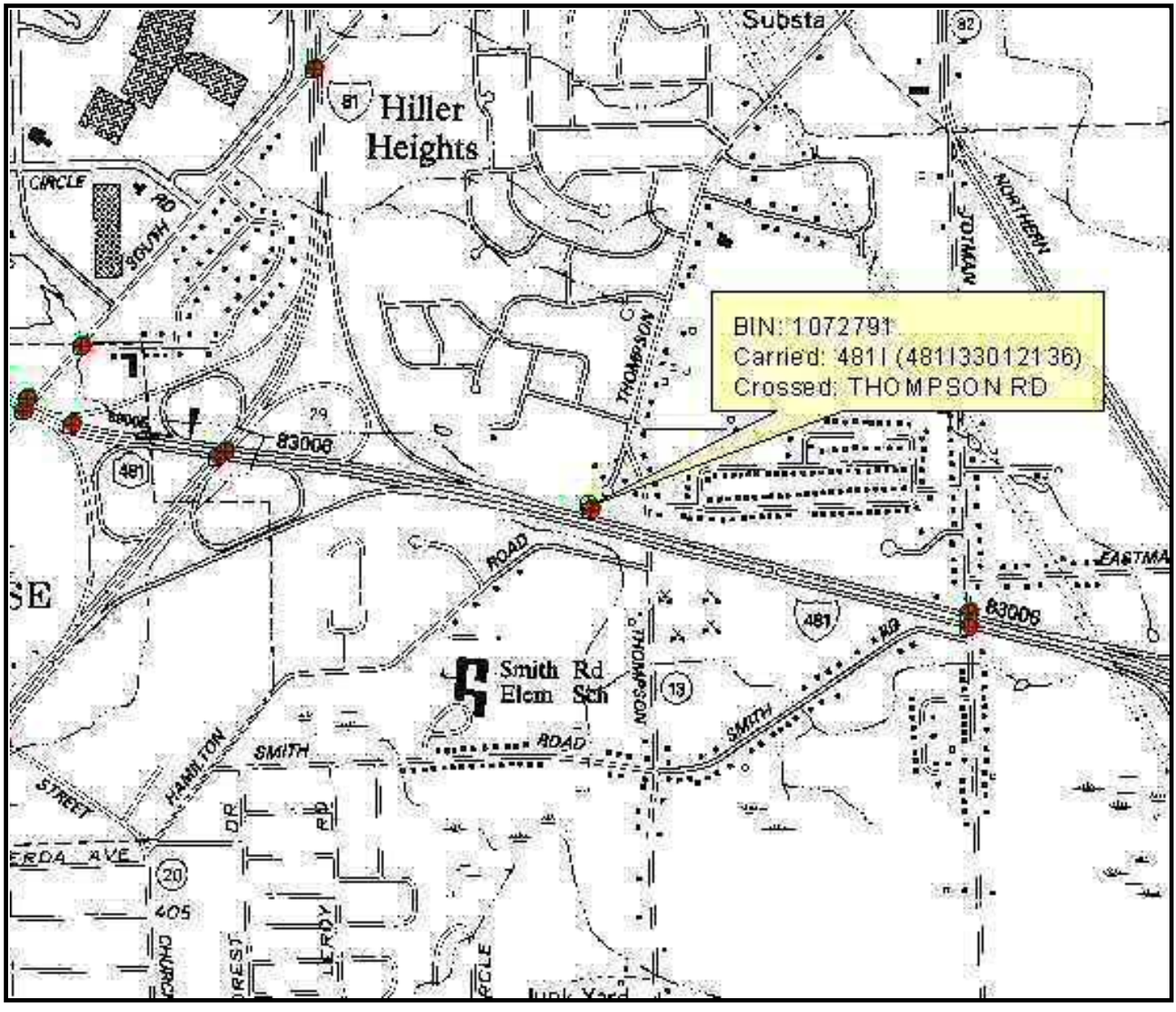

Standard Photos **RC: 33 BIN: 1072791**

Carried: 481I 481I33012136 Crossed: THOMPSON RD

AbutmentEnd.12.jpg



Standard Photos **RC: 33 BIN: 1072791**

Carried: 481I 481I33012136 Crossed: THOMPSON RD

ApproachBegin.12.jpg



Standard Photos **RC: 33 BIN: 1072791**

Carried: 481I 481I33012136 Crossed: THOMPSON RD

ApproachEnd.12.jpg



Standard Photos **RC: 33 BIN: 1072791**

Carried: 481I 481I33012136 Crossed: THOMPSON RD

ElevationSpan1.12.jpg



Standard Photos RC: 33 BIN: 1072791

Carried: 481I 481I33012136 Crossed: THOMPSON RD

F2CrossedSpan1Left.12.jpg



Standard Photos **RC: 33 BIN: 1072791**

Carried: 481I 481I33012136 Crossed: THOMPSON RD

F2CrossedSpan1Right.12.jpg



Standard Photos **RC: 33 BIN: 1072791**

Carried: 481I 481I33012136 Crossed: THOMPSON RD

FramingSpan1.12.jpg



LEVEL 1 LOAD RATING SUMMARY SHEET

Region/County Region 3/Onondaga BIN 1072791
Feature(s) Carried and Crossed I-481 Southbound/Thompson Road
Date of field inspection upon which Level 1 rating is based 1/7/2014

OVERALL BRIDGE RATTNGS (BASED ON LOWEST RATED ELEMENTS):

Total number of rating units 1

	H inventory	H operating	HS inventory	HS operating
Rating	H 32.03 (tons)	H 53.49 (tons)	HS 51.12 (tons)	HS 85.37 (tons)
Lowest rated element	Interior Girder G2 and G4	Interior Girder G2 and G4	Interior Girder G2 and G4	Interior Girder G2 and G4

Analysis method LFR Comments

Individual Rating Unit Level 1 values:

Rating unit span(s) 1

Main member ratings

	H inventory	H operating	HS inventory	HS operating
Rating	H (tons)	H (tons)	HS (tons)	HS (tons)
Lowest rated element				

Analysis method Comments

Floorbeam ratings

	H inventory	H operating	HS inventory	HS operating
Rating	H (tons)	H (tons)	HS (tons)	HS (tons)
Lowest rated element				

Analysis method Comments

Stringer ratings

	H inventory	H operating	HS inventory	HS operating
Rating	H 32.03 (tons)	H 53.49 (tons)	HS 51.12 (tons)	HS 85.37 (tons)
Lowest rated element	Interior Girder G2 and G4	Interior Girder G2 and G4	Interior Girder G2 and G4	Interior Girder G2 and G4

Analysis method LFR Comments

Certified by Date

Quality Control Engineer Signature Date
Agency or Company represented by certifier

Note:
-If connection ratings govern, record them under stringer ratings for stringer – floorbeam connection, floorbeam ratings for floorbeam-main member connections, etc.
-When Level 1 results indicated the need for load posting or other corrective action, the NYSDOT Regional Structures Engineer shall be notified immediately.
-Load ratings should be filed in the regional office within 60 days of completion of calculations.
-Bridges shall be flagged based on Level I results in accordance with the current NYSDOT flagging procedure.
-Bridge load posting, closure, etc. determinations shall be made as results are being produced.

PARSONS

100 Broadway
New York, NY 10005
Phone: 212-266-8300
Fax: 212-571-6825
www.parsons.com

TECHNICAL MEMORANDUM

FROM: Kian Siang Chau, P.E
NYSPE 082744

DATE: MARCH 19, 2014

RE: SEISMIC SCREENING SUMMARY
NEW YORK STATE DEPARTMENT OF TRANSPORTATION
D031085; PIN 3501.60; I-81

BIN: 1072791 (I-481 SB / Thompson Rd)

This memorandum summarizes the seismic screening conducted for BIN 1072791 as part of the Interstate 81 Project in Syracuse, NY. The purpose of the screening is to determine if seismic retrofits are warranted at the superstructure to substructure connection, and if further seismic evaluation of the structure is required. This memorandum will give the screening results, retrofits required and recommendations for further seismic evaluation of the structure.

SCREENING PROCEDURE

The seismic screening was performed in accordance with the FHWA Seismic Retrofitting Manual for Highway Structures: Part 1 - Bridges, January 2006. As per the referenced manual, seismic screenings were performed for both lower level and upper level earthquake ground motion. The lower level earthquake ground motion has a reasonable likelihood of occurrence within the life of the bridge (50% probability of exceedance within a 75 year bridge life). The upper level earthquake ground motion has a finite likelihood of occurrence within the life of the bridge (7% probability of exceedance within a 75 year bridge life).

Values for the spectral acceleration for the Syracuse area used in the screening are as follows:

- Lower Level Earthquake Ground Motion for a Short Period (0.2 seconds): $S_S = 0.0251$
- Lower Level Earthquake Ground Motion for a Long Period (1.0 seconds): $S_1 = 0.0076$
- Upper Level Earthquake Ground Motion for a Short Period (0.2 seconds): $S_S = 0.139$
- Upper Level Earthquake Ground Motion for a Long Period (1.0 seconds): $S_1 = 0.047$

These values are considered constant and are the same for all seismic screenings of bridges in the Syracuse area.

The Site Class is based on the soil conditions at the bridge location. It was determined that this parameter has little effect on the results of the seismic screening because the spectral acceleration values for the Syracuse area are small. Based on this, a site class of D was used for all seismic screenings of bridges in the Syracuse area.

Bridge parameters used in the seismic screening were retrieved from the record drawings and WinBolts data.

The seismic screening takes into account the anticipated service life, importance, and the seismic exposure of the bridge to determine a seismic retrofit category (SRC). The SRC is then used to determine seismic evaluation methods and retrofit measures. There are four SRCs, A through D. Seismic retrofit category A is the lowest category; bridges in this category do not require retrofits or further seismic evaluation. Seismic retrofit category D is the highest category; bridges in this category requiring the most rigorous seismic evaluations and retrofits.

SCREENING RESULTS

The SRC for the bridge is "**C**" for lower level earthquake ground motion and "**B**" for upper level earthquake ground motion.

RETROFITS REQUIRED

No seismic retrofits are required for the bridge superstructure to substructure connection.

RECOMMENDATIONS FOR FURTHER SEISMIC EVALUATION

No further seismic evaluation is required for lower level earthquake ground motion. For the upper level earthquake ground motion, it is recommended that the capacities of the bearings are checked as per Section 5.2 of the referenced manual.

Retrofit cost estimates will be provided after any further required seismic evaluations are completed.

BRIDGE DECK EVALUATION REPORT

RECOMMENDATIONS

The bridge deck inspection findings and evaluation are used as a tool for developing the scope of work and cost estimates for the development and comparison of alternatives for the overall project.

The total damaged area of the deck is 3.1% of the total deck surface area. The cores indicate the reinforcement steel is 3.0 inches to 6.5 inches below the surface of the deck. The lab test indicates that chloride ion concentrations at all the sample locations are significantly higher than the corrosion threshold for steel.

Due to the age, condition and high chloride ion content of the bridge deck concrete, the bridge deck should be rehabilitated or replaced to meet the current standards and to mitigate excessive future maintenance costs.

ALTERNATIVES

- Rehabilitation Alternative - 2 inches Bonded Concrete Overlay
  - Scope

    The scope of this alternative will include the complete removal of the bridge parapets and fascias to the level of the original top of the deck. The joint will be removed. The top 2 inches of the entire deck will be removed and areas of deteriorated concrete must be removed to at least 1 inch below the level of the reinforcement steel and to the horizontal and vertical limit of any detectable hollow areas. Additionally, any further areas of deteriorated concrete detected will require full depth removal. Any corrosion of the reinforcement steel will be removed by sandblasting or hydro-blasting. The proposed deck overlay will be a 3 inches thick bonded concrete overlay yielding a nominal 9.5 inches standard thickness deck. A new single-sloped concrete barrier and a new armorless joint will be installed. The Level 1 Load Rating for the final condition was found to be acceptable.

- Useful Life Expectancy

  The removal of the top 2 inches of the existing deck will remove a portion of the deck with high chloride ion concentrations. It can be anticipated that chloride ions will continue to migrate into the remaining deck to the reinforcing steel resulting in further corrosion-related deterioration of the deck surface. Concrete admixtures will be included in the bonded concrete overlay to impede the continued penetration of chloride into the deck from the surface. This alternative will result in an extended useful life expectancy estimated at 20 years.

The design life of the project is 30 years (ETC + 30). This alternative does not meet the project objectives of obtaining 30 years of service life and is not evaluated further.

- Rehabilitation Alternative – 100% Deep Removal and Partial Deck Reconstruction
  - Scope

    The scope of this alternative will include the complete removal of the bridge parapets and fascias to the level of the original top of the deck. The joint will be removed. The scope of this alternative will include partial depth reconstruction with removal of the concrete to at least 1 inch below the top mat of the reinforcement steel. Additionally, any further areas of deteriorated concrete detected will require full depth removal. Any corrosion of the reinforcement steel will be removed by sandblasting or hydro-blasting. Due to the condition of the deck, full depth removal is not likely and not included in the cost estimate. The proposed deck partial reconstruction will be a nominal 5.75 inches thick concrete deck yielding a 9.5 inches standard thickness deck. A new single-sloped concrete barrier and a new armorless joint will be installed. The Level 1 Load Rating for the final condition was found to be acceptable.
  - Useful Life Expectancy

    This alternative will provide a useful life expectancy is estimated at 35 years.
  - Cost Estimate

    The estimated cost for this alternative is $385,000. The Engineer's Opinion of Probable Construction Cost worksheet is at the end of this section.

- Replacement Alternative – Cast-In-Place Concrete
  - Scope

    This scope of this alternative will include the complete demolition of the existing bridge deck, parapets, fascias and bridge joint. The bridge deck will be replaced with a new 9.5 inches standard thickness concrete deck. A new single-sloped concrete barrier and a new armorless joint will be installed. The Level 1 Load Rating for the final condition was found to be acceptable.
  - Useful Life Expectancy

    This alternative will provide a useful life expectancy is estimated at 40+ years.
  - Cost Estimate

    The estimated cost for this alternative is $514,000. The Engineer's Opinion of Probable Construction Cost worksheet is at the end of this section.

- Replacement Alternative – Pre-cast Concrete Deck Panels
  - Scope

    The scope of this alternative is similar to the Cast-In-Place Concrete Deck Replacement Alternative except the deck structure will be precast panels. This alternative offers reduced construction time over conventional construction.
  - Useful Life Expectancy

    This alternative will provide a useful life expectancy is estimated at 40+ years.
  - Cost Estimate

    The comparison of accelerated construction to conventional construction is beyond the current scope of this evaluation.

IN-DEPTH INSPECTION REPORT

D031085 P.I.N. 3501.60

ELEMENT SPECIFIC BRIDGE WORK

B.I.N. 1072792

TEAM LEADER Andrew P. Thompson 84914
NYSPE LICENSE #

ASSISTANT TEAM LEADER Mike Savino

FEATURE CARRIED I-481 Northbound

FEATURE CROSSED Thompson Road

DATE FIELD WORK BEGAN 12/9/13

DATE FIELD WORK COMPLETED 1/7/14

TABLE OF CONTENTS

- STRUCTURE IDENTIFICATION
- INTRODUCTION
- PROJECT LOCATION MAP
- IN DEPTH CONDITION DOCUMENTATION
- PLANS & SKETCHES
- IN-DEPTH PHOTO DOCUMENTATION
- ASBESTOS SAMPLING SURVEY
- LATEST BIENNIAL INSPECTION REPORT

STRUCTURE IDENTIFICATION

a. Bridge Identification Number (BIN): 1072792
b. Reference Marker: 481I 3301 2136
c. Region: NYSDOT Region 3
d. County: Onondaga
e. Town: Cicero
f. Feature Carried: I-481 Northbound
g. Feature Crossed: Thompson Rd.

INTRODUCTION

a. Bridge History
   i. Year Built: 1986
   ii. Bridge Type: Single Span Steel, Multi-girder
   iii. Span Length: 101 feet
   iv. Out-to-Out Width: 44 feet
   v. Structural Ratings and Rankings
      1. Federal Sufficiency: 90.3 (June 2012)
      2. Condition Rating: 5.683 (June 2012)
      3. General Recommendation: 6
   vi. Live Load Posting (HS25): No
   vii. National Highway System (NHS): Yes
   viii. Previous work Done: Waterproof bridge deck (1999), Joints replaced and bearing restoration (2002).
   ix. Planned Future Work: N/A
b. Highway Classification
   i. Functional Classification: Urban Principle Arterial - Interstate
   ii. Traffic Volumes

YEAR	AADT Projected
2014	36758
2034	54620
2054	81163

   iii. Plan for Maintenance and Protection of Traffic:
   Maintenance and Protection of traffic will be achieved by staged construction.

PROJECT LOCATION MAP

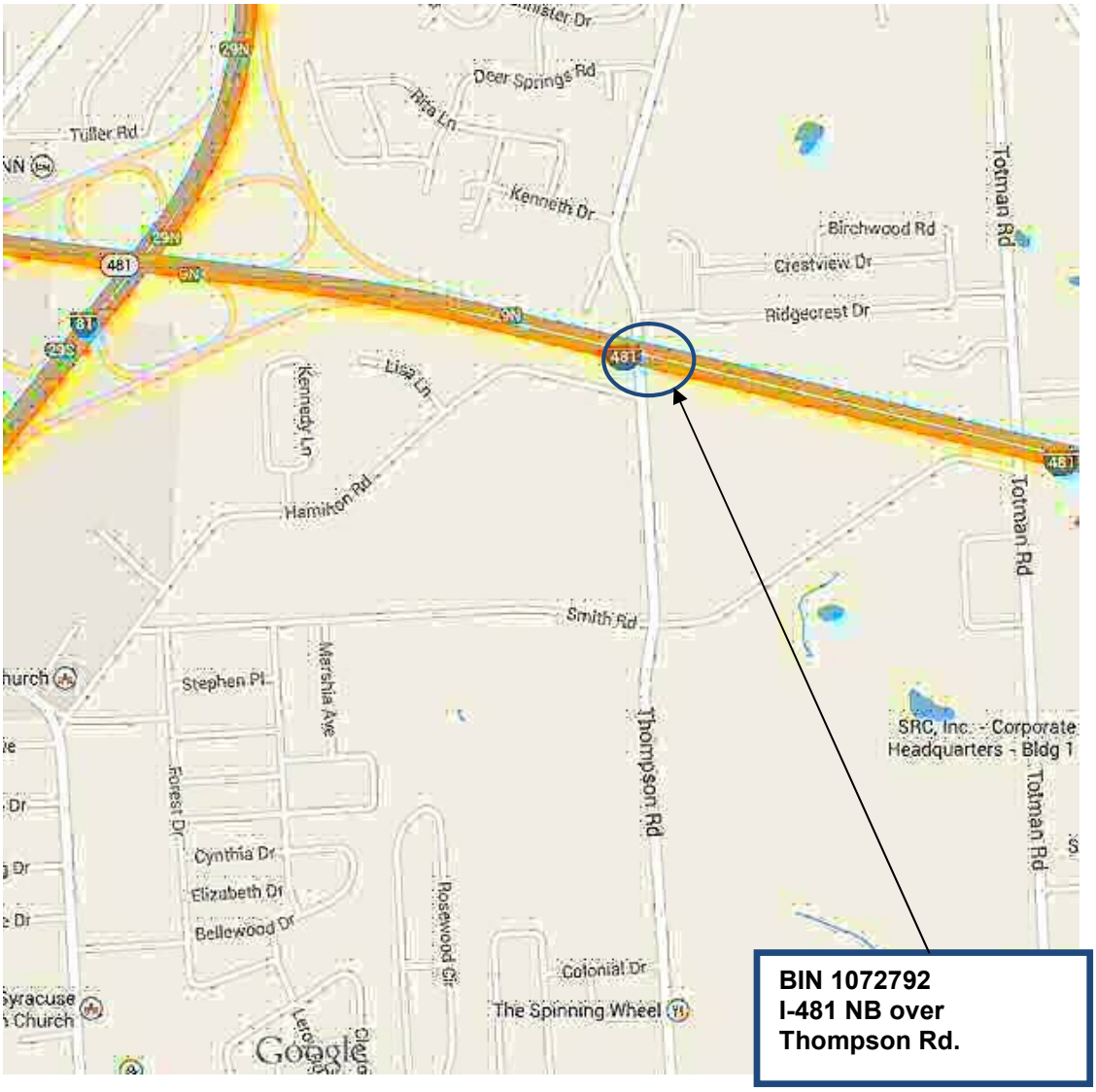

IN-DEPTH CONDITION DOCUMENTATION

NYS DEPT. OF TRANSPORTATION BRIDGE

BIN 1072792

SHEET: 1 OF 3

DATE: 1/7/2014

FEATURE CARRIED: I-481 NB
FEATURE CROSSED: THOMPSON RD

TEAM LEADER: A.THOMPSON

A. TEAM LEADER: M. SAVINO

ITEM	REMARKS	PHOTO N0.
TP 349-26	Begin Abutment - Seats and Pedestals: The left face of Pedestal 1 is cracked but sounds solid (Photo 1). The remainder of the seats and pedestals are in good condition.	1
TP 349-27	End Abutment - Seats and Pedestals: The right and left faces of Pedestal 1 are cracked but sound solid (Photos 2 and 3). The remainder of the pedestals are in good condition. The 1 sf area of bridge seat to the left of Pedestal 1 is cracked with the left corner hollow sounding. The seat in Bay 1 has a 4' long transverse crack located 5" from the front with a 2.5' x 4" adjacent hollow area extending from the stem (Photo 3). The seat area to the right of Pedestal 5 has hairline cracking over 50% of its area (Photo 4).	2-4
TP 349-28	Begin Abutment - Backwall: The begin backwall has hairline horizontal and map cracking in all bays (Photos 5 and 6). No hollow areas were found.	5,6
TP 349-29	End Abutment - Backwall: The backwall at the right has a 1/16" wide full height crack with rust staining (Photo 7). The remainder of the backwall has map cracking throughout. No spalling or hollowness noted.	7
TP 349-30	Begin Abutment - Stem: The begin stem has a 3 sf hollow area at the top under fascia Pedestal 5 and a 1 sf hollow area near the bottom right (Photo 8). The remainder is in good condition (Photo 9).	8,9
TP 349-31	End Abutment - Stem: The end stem has an 8 sf hollow area at the top under Pedestal 1 (Photo 11) and a 3 sf cracked and hollow area at the top under fascia Pedestal 5 (Photo 10). There is also a 1 sf hollow area at the bottom near the left. The remainder is in good condition (Photo 11).	10,11
TP 350-21	Deck Elements – Sidewalks/Fascias: The right fascia has full height map cracking throughout its length with no spalling or hollow sounding areas (Photo 12). The left fascia is better with vertical hairline cracking spaced at +/-6' (Photo 13).	12,13
TP 350-22	Deck Elements - Railings/Parapets: Both parapet inside faces are map cracked for their entire length with the heaviest concentration at the begin left (Photo 14). The right parapet outside face has light map cracking (Photo 12). The left parapet outside face has heavy map cracking and staining coming from the timber noise barrier above it (Photo 13). The left timber noise barrier is in good condition.	12-14

FEATURE CARRIED: I-481 NB
FEATURE CROSSED: THOMPSON RD

TEAM LEADER: A.THOMPSON
A. TEAM LEADER: M. SAVINO

ITEM	REMARKS	PHOTO N0.
TP 350-27	Superstructure - Structural Deck: The structural deck is an 8.5" thick concrete mono deck with SIP forms. The right lane is in good condition except for a 6' long x 10' wide area with light scaling located +/-37' from the begin (Photos 15 and 16). This area sounds solid. The left lane has areas of hollowness (Photo 17). There are also several patched areas. These conditions are detailed in the Deck Deterioration Plan. There is one patch located +/- 20' from the end centered in the left lane which measures 6" wide x 14' long (Photo 18). There are (2) 1.5' long by 6" wide areas in the patch that have settled 1/2". The underside is exposed only at the overhangs (Photos 23 and 24). The deck at the left overhang near Girder 1 at the begin backwall has a 7" x 4" x 1” deep spall with rust staining (Photo 19). There is a similar but less severe spall at the right overhang. The deck at the right overhang near Girder 5 at the end backwall has (3) 3” dia. x 1” deep spalls with hairline cracking with efflorescence (Photo 20). Both deck overhangs have transverse hairline cracking at +/-3’ spacing for most of the span length (Photo 21). The SIP form is missing in Bay 4 for a 4’ length 5’ from the end (Photo 22). The deck and surrounding forms in this location are in good condition. Remainder of forms are in good condition.	15-24
TP 350-30	Superstructure - Paint: The protective coating is coming off in large flakes on the fascia girder bottom flanges and lower 3” of the web. The remainder of the fascia and interior girders has only light peppering and is in good condition (Photo 24).	24

NYS DEPT. OF
TRANSPORTATION BRIDGE

BIN 1072792

SHEET: 3 OF 3
DATE: 1/7/2014

FEATURE CARRIED: I-481 NB
FEATURE CROSSED: THOMPSON RD

TEAM LEADER: A.THOMPSON
A. TEAM LEADER: M. SAVINO

ITEM	REMARKS	PHOTO N0.
	Special Emphasis Inspection Required Non-Redundant/Fracture Critical Members - No Pin and Hangers - No Fatigue-Prone Welds - No Non-Categorized Fatigue-Prone Details - No Other - No	

PLANS & SKETCHES

D250416

FED. RD. REG. NO.	STATE	FEDERAL AID PROJECT NO.	SHEET NO.	TOTAL SHEETS
	NEW YORK	IR-81-2(154)	278	380

INTERSTATE RTE. 570 EXTENSION (I-481)
NORTHERN BLVD. TO BEAR ROAD INTERCHANGE
ONONDAGA COUNTY

CAPITAL PROJECT IDENTIFICATION NO.

1072792
NB

TEAM LEADER B Gaik
DATE 5/87
FIELD VERIFIED ✓
Peter Reichlman
11/17/88

Opelka 12/4/90 P.J.R. 11/92
Opelka 10/25/94
Douglas E Tillson 10/16/96
Bruce Opelka 4/19/00
Amy W Cook 9/19/02
BTO 9/18/04
Amy W Cook 07/12/06
David D. Hamm 7/30/08
Bruce Opelka 7/13/12
Peter Reichlman 6/8/12

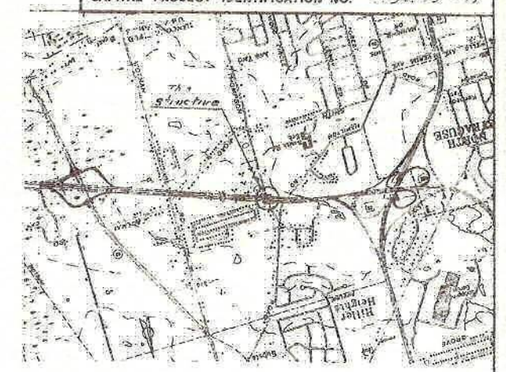

LOCATION MAP
SCALE 1" = 2000'
CLOSED QUADRANGLE

BIN 1072791 (Br. 11) & BIN 1072792 (Br. 10)	
INVENTORY RATING	OPERATING RATING
HS 23(42T)(W.S.)	HS 47(BST)(W.S.)

The ratings shown are based on the use of the Type 2 Form System - See Dwg. No. 21 of 38.

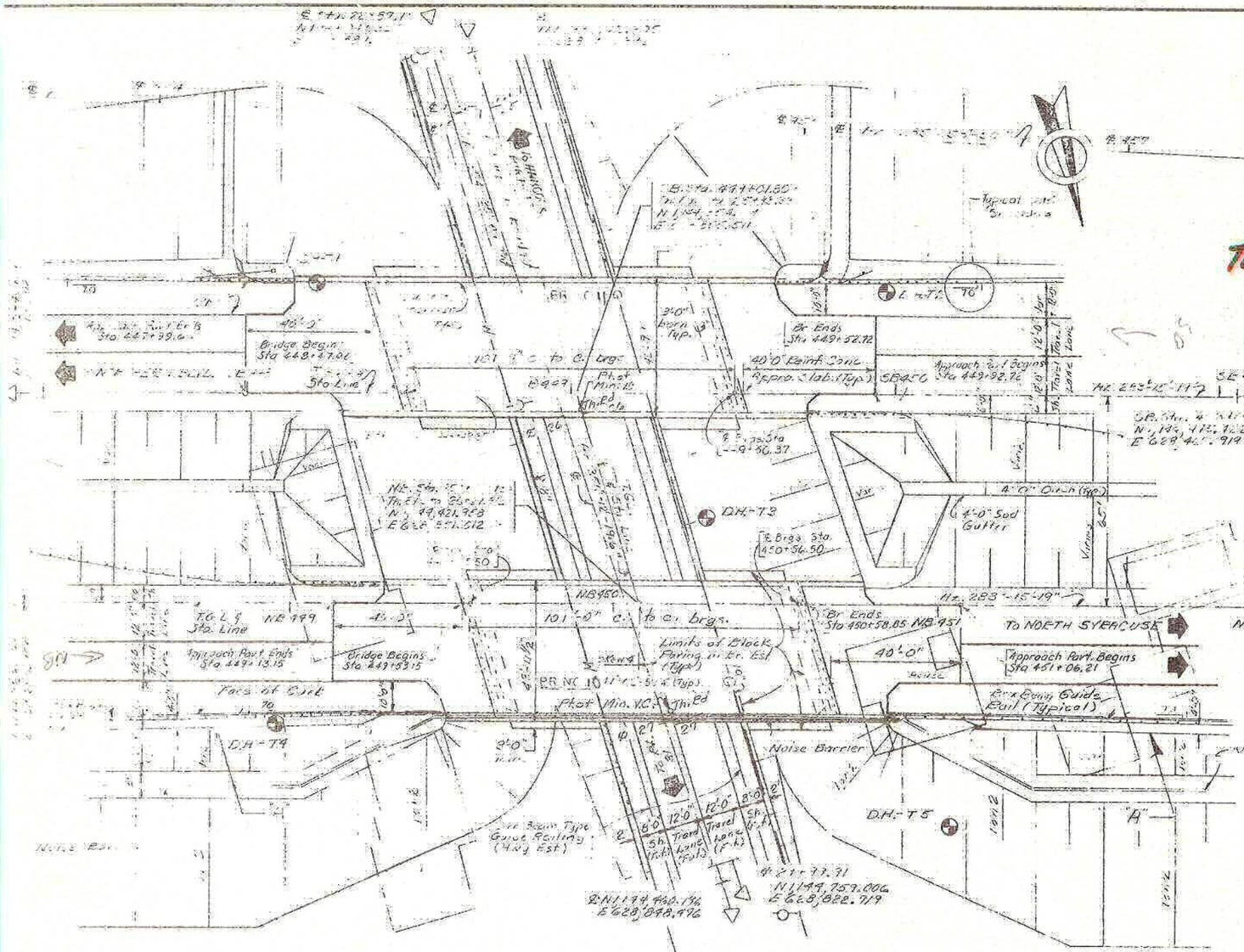

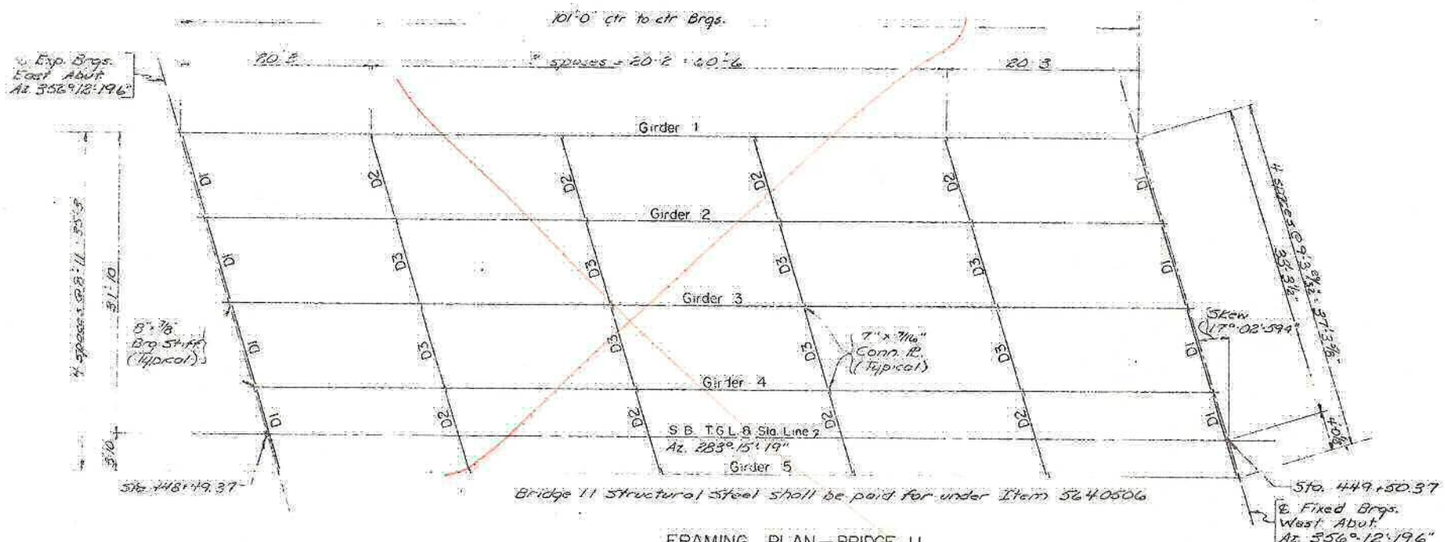

Bridge 11 Structural Steel shall be paid for under Item 564.0506

FRAMING PLAN—BRIDGE 11
Scale: 1/8" = 1'-0"

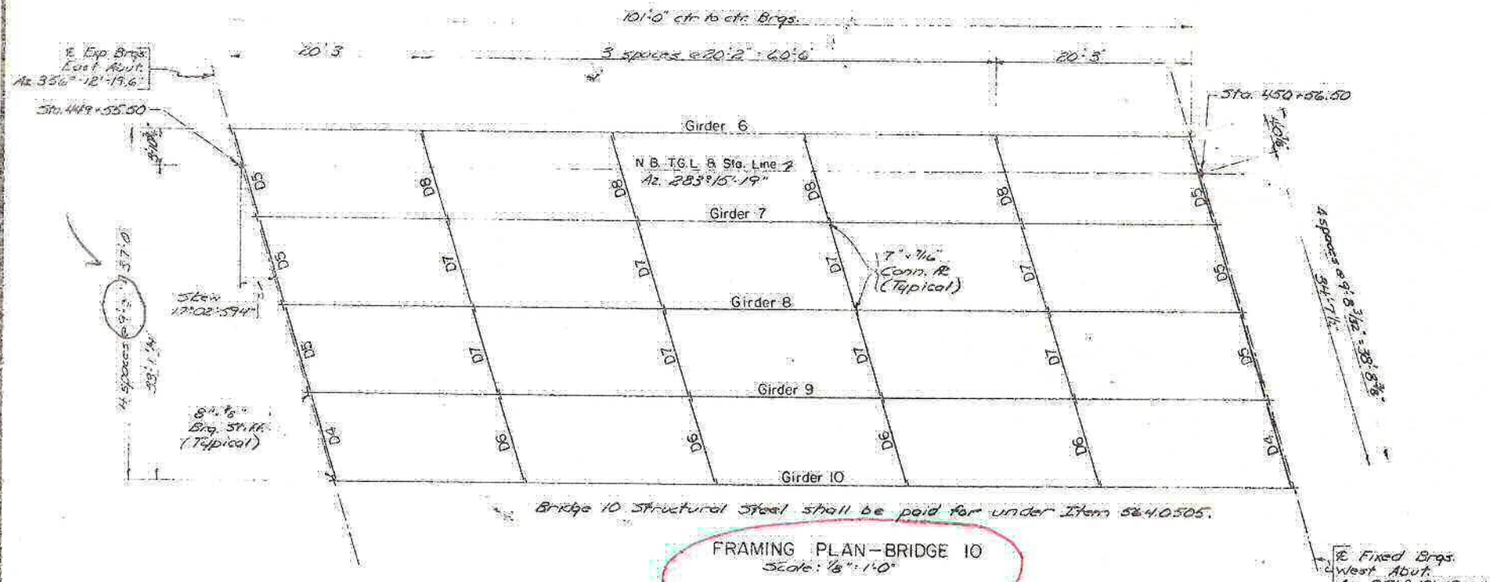

Bridge 10 Structural Steel shall be paid for under Item 564.0505.

FRAMING PLAN—BRIDGE 10
Scale: 1/8" = 1'-0"

FED. RD. REG. NO.	STATE	FEDERAL AID PROJECT NO.
	NEW YORK	(R-81-2(156)

INTERSTATE RTE. 570 EXTENSION (
NORTHERN BLVD. TO BEAR ROAD (NYS
ONONDAGA COUNTY

CAPITAL PROJECT IDENTIFICATION NO. 31

STATE OF NEW YOR
DEPARTMENT OF TRANSPO
STRUCTURES DESIGN AND CONSTRU

Bridges 10 & 11 over Thom

FRAMING PLANS

PROJ. ENG. E.J. Gary

DESIGNED BY L.B. Lyon
DESIGN CHECKED BY S.P.H.
DETAILED BY K. L.
DETAIL CHECKED BY

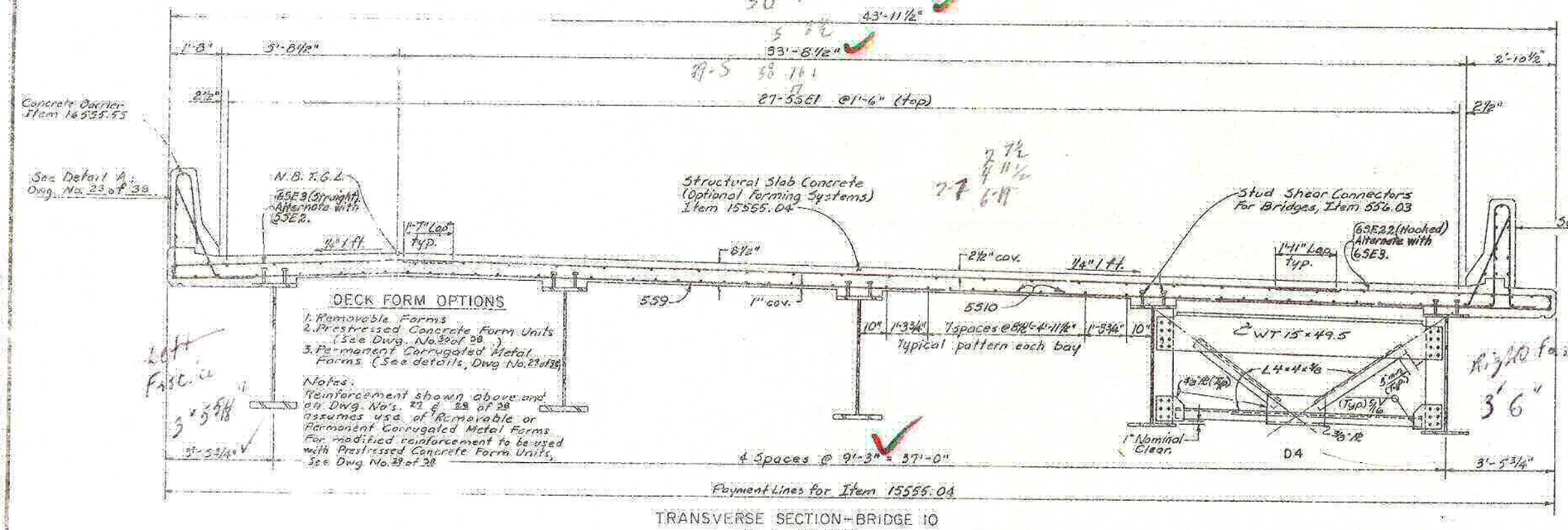

TRANSVERSE SECTION - BRIDGE 10
Scale: ½"=1'-0"

* Location of Lap on alternate bars (see Dwg. No. 27 of 38.)

DIAPHRAGMS D-5 - D-8 NOT S (SEE DWG. NO. 22 OF 38)		
BRIDGE 10 DIAPHRAGM	SAME AS BRIDGE 11 DIAPHRAGM ON DWG. NO. 22 OF 38	EXCE
D5	D1	Membe
D6	D2	Membe D6 angle
D7	D3	Membe
D8	D2	Membe

For Diaphragm Notes, see Dwg. No. 23 of 38.

CAPITAL PROJECT IDENTIFICATION NO. 3107

HAUNCH TABLE — BRIDGE 10	℄ PRG.	0.1L	0.2L	0.3L	0.4L	0.5L	0.6L	0.7L	0.8L	0.9L	℄ BRG.
Girder 8 (A) Reg'd. bottom of slab elevation	413.90	413.86	413.83	413.79	413.76	413.72	413.67	413.63	413.58	413.54	413.49
(B) Top of steel El. (Field meas.)											
(C) = (A) - (B)											
(D) Concrete + S.D.L. Deflection	0	0.11	0.19	0.27	0.31	0.33	0.31	0.27	0.19	0.11	0
(E) Depth of haunch req'd. = (C)+(D) ft.											
Girder 9 (A) Reg'd. bottom of slab elevation	413.86	413.82	413.79	413.75	413.72	413.67	413.63	413.59	413.54	413.49	413.44
(B) Top of steel El. (Field meas.)											
(C) = (A) - (B)											
(D) Concrete + S.D.L. Deflection	0	0.11	0.19	0.27	0.31	0.33	0.31	0.27	0.19	0.11	0
(E) Depth of haunch req'd. = (C)+(D) ft.											
Girder 10 (A) Reg'd. bottom of slab elevation	413.66	413.62	413.59	413.55	413.51	413.47	413.43	413.38	413.33	413.29	413.23
(B) Top of steel El. (Field meas.)											
(C) = (A) - (B)											
(D) Concrete + S.D.L. Deflection	0	0.11	0.19	0.27	0.31	0.33	0.31	0.27	0.19	0.11	0
(E) Depth of haunch req'd. = (C)+(D) ft.											
Girder 11 (A) Reg'd. bottom of slab elevation	413.45	413.42	413.39	413.35	413.31	413.27	413.22	413.18	413.13	413.08	413.03
(B) Top of steel El. (Field meas.)											
(C) = (A) - (B)											
(D) Concrete + S.D.L. Deflection	0	0.11	0.19	0.27	0.31	0.33	0.31	0.27	0.19	0.11	0
(E) Depth of haunch req'd. = (C)+(D) ft.											
Girder 12 (A) Reg'd. bottom of slab elevation	413.25	413.22	413.18	413.14	413.10	413.06	413.02	412.97	412.92	412.87	412.82
(B) Top of steel El. (Field meas.)											
(C) = (A) - (B)											
(D) Concrete + S.D.L. Deflection	0	0.11	0.22	0.29	0.34	0.36	0.34	0.29	0.22	0.11	0
(E) Depth of haunch req'd. = (C)+(D) ft.											

Note: Computations in the Haunch Table shall be algebraic.

FASCIAS OVERHANG AVERAGE OUT TO 3'-5 3/4"

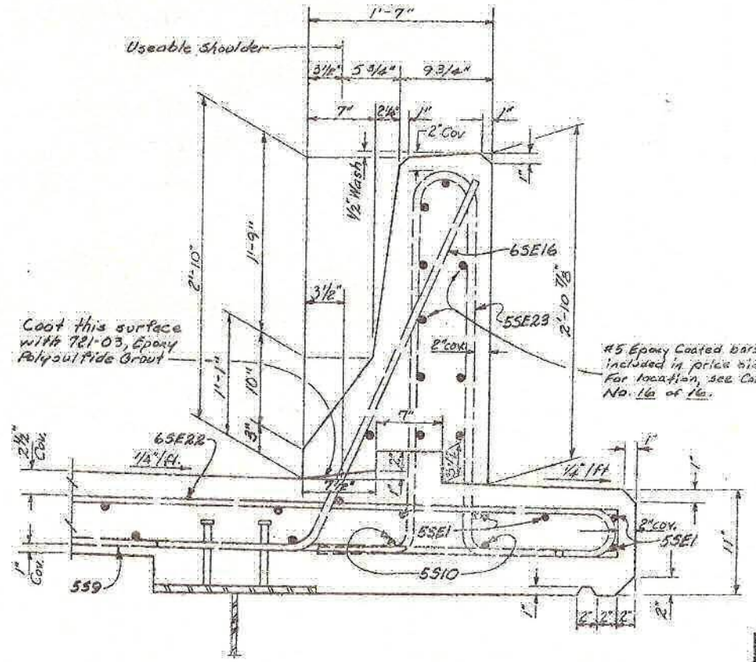

DETAIL B
Scale: 1½"=1'-0"

NOTE:
Haunch Table is based upon use of the Girder which would be used with Deck Form Type 2. (See Girder Tables Dwg No. 21 of 38.

CONCRETE TABL	
POUR	ITEM
Structural Slab	4542

STATE OF NEW YOR
DEPARTMENT OF TRANS
STRUCTURES DESIGN AND CONSTR

Bridge 10 over Thompson Rd.

TRANSVERSE SECTION & HAU
BRIDGE 10

FED ROAD REG. NO.	STATE	CONTRACT NO.	SHEET NO.	TOTAL SHEETS
1	N.Y.	D259214	362	432

BRIDGE REHABILITATION PROJECT (ELEMENT SPECIFIC)
VARIOUS BRIDGES ON INTERSTATE 481
TOWNS OF DEWITT AND CICERO
ONONDAGA COUNTY
P.I.N. 305613 | B.I.N. ALL BINS

BRIDGE JOINT TABLE

B.I.N. NUMBER	JOINT LOCATION	JOINT SKEW	SPAN(S) LENGTH FOR JOINT (METERS)	JOINT BEND LOCAT'N RT	JOINT BEND LOCAT'N LT	EXISTING JOINT TYPE	PROPOSED JOINT TYPE	CURB TO CURB DISTANCE (METERS) (SEE NOTES)	FASCIA & MEDIAN LENGTH (METERS) LT/RT	TOTAL LENGTH (METERS)	JOINT ITEM NUMBER(S)	DRAWING NUMBER SECT VIEW	DRAWING NUMBER PLAN VIEW	DRAWING NUMBER FASCIA DETAIL
1072530	EAST ABUT.	0°-00'-00"	33.528	N	N	ACJ	MAC-5	15.850	.457/.457	16.764	567.35M	JD-30	JD-29	JD-30
	WEST ABUT.	0°-00'-00"	37.795	N	N	ACJ	MAC-5	15.850	.457/.457	16.764	567.35M	JD-30	JD-29	JD-30
1072571	SOUTH ABUT.	20°-29'-45.2"	44.196	N	N	ACJ	MAC-6	14.481	.488/.488	15.457	567.36M	JD-32	JD-31	JD-32
	NORTH ABUT.	20°-29'-45.2"	———	N	N	ACJ	MAC-1	15.456	.488/.488	16.428	567.31M	JD-32	JD-31	JD-32
1072572	SOUTH ABUT.	21°-09'-2.1"	44.196	N	N	ACJ	MAC-6	12.746	.490/.490	13.726	567.36M	JD-34	JD-33	JD-34
	NORTH ABUT.	21°-09'-2.1"	———	N	N	ACJ	MAC-1	12.746	.490/.490	13.726	567.31M	JD-34	JD-33	JD-34
1072581	SOUTH ABUT.	3°59'-27.5"	37.033	N	N	ACJ	MAC-5	11.917	.458/.458	12.833	567.35M	JD-36	JD-35	JD-36
	NORTH ABUT.	3°-59'-27.5"	———	N	N	ACJ	MAC-1	11.917	.458/.458	12.833	567.31M	JD-36	JD-35	JD-36
1072582	SOUTH ABUT.	3°-51'-57.9"	37.033	N	N	ACJ	MAC-5	11.915	.458/.458	12.831	567.35M	JD-38	JD-37	JD-38
	NORTH ABUT.	3°-51'-57.9"	———	N	N	ACJ	MAC-1	11.915	.458/.458	12.831	567.31M	JD-38	JD-37	JD-38
1072781	EAST ABUT.	16°-26'-24"	———	N	N	ACJ	MAC-1	12.500	.530/.530	13.560	567.31M	JD-40	JD-39	JD-40
	WEST ABUT.	16°-26'-24"	33.635	N	N	ACJ	MAC-5	12.500	.530/.530	13.560	567.35M	JD-40	JD-39	JD-40
1072782	EAST ABUT.	16°-26'-24"	———	N	N	ACJ	MAC-1	13.183	.530/.530	14.243	567.31M	JD-42	JD-41	JD-42
	WEST ABUT.	16°-26'-24"	31.394	N	N	ACJ	MAC-5	12.589	.530/.530	13.649	567.35M	JD-42	JD-41	JD-42
1072791	EAST ABUT.	17°-02'-59.4"	30.785	N	N	ACJ	RCS	12.566	.531/.531	13.628	16567.64M	JD-47	JD-43	JD-47
	WEST ABUT.	17°-02'-59.4"	———	N	N	ACJ	RCS	12.566	.531/.531	13.628	16567.64M	JD-47	JD-43	JD-47
1072792	EAST ABUT.	17°-02'-59.4"	30.785	N	N	ACJ	MAC-5	12.566	.530/.530	14.015	567.35M	JD-44	JD-43	JD-44
	WEST ABUT.	17°-02'-59.4"	———	N	N	ACJ	MAC-1	12.566	.530/.530	14.015	567.31M	JD-44	JD-43	JD-44
1093510	WEST ABUT.	44°-07'-00"	———	N	N	ACJ/ADA	RCS	16.560	.637/.637	17.834	16567.64M	JD-46	JD-45	JD-46
	EAST ABUT.	40°-26'-00"	37.522	N	N	ADA	RADA	15.620	———	15.620	———	JD-46	JD-45	———

LEGEND

EXISTING JOINT TYPE:

ACJ = ARMORED COMPRESSION JOINT SYSTEM
MOD = MODULAR JOINT SYSTEM
MAC = MODIFIED ARMORED COMPRESSION SYSTEM (NO HORIZ. ARMORING ANGLE)
ADA = ARMORED DECK ANGLE
SS = STRIP SEAL JOINT
OPEN = OPEN JOINT

PROPOSED JOINT TYPE:

MAC-1 = MOD. ARM./COMP. SEAL JT. SYS. (A-1)
MAC-2 = MOD. ARM./COMP. SEAL JT. SYS. (A-2)
MAC-5 = MOD. ARM./COMP. SEAL JT. SYS. (A-5)
MAC-6 = MOD. ARM./COMP. SEAL JT. SYS. (A-6)
RCS = REPLACE EXISTING COMPRESSION SEAL
RADA = REMOVE ARMOR DECK ANGLE
MOD-1 = MODULAR JT. SYS. (ONE-CELL)
MOD-2 = MODULAR JT. SYS. (TWO-CELL)

JOINT BEND LOCATION:

N = NO BENDS
CRB = CURB LINE
PAV'T = PAVEMENT

GENERAL NOTES:

- ALL MEASUREMENTS SHALL BE FIELD VERIFIED.
- CURB TO CURB LENGTHS ARE MEASURED ALONG ℄ OF JOINT.
- MULTIPLE DIMENSIONS ARE SHOWN LOOKING UP-STATION, LEFT TO RIGHT.
- ALL DIMENSIONS ARE SHOWN IN METERS.

INFORMATIONAL NOTES:

BIN 1072530 - NO JOINT AT PIER.

BIN 1072791 - REPLACE COMPRESSION SEALS
BEG. ABUT. (EAST), TYPE A-5
END ABUT. (WEST), TYPE A-1

FOR JOINT DETAILS REFER TO THE FOLLOWING DRAWINGS:

DWG. NO. JD-1 - MODIFIED ARMORED COMPRESSION SEAL JOINT SYSTEM.
DWG. NO. JD-24 - ONE-CELL MODULAR JOINT SYSTEM.
DWG. NO. JD-25 - TWO-CELL MODULAR JOINT SYSTEM.

LIST OF BRIDGE JOINT ITEMS USED:

ITEM 566.01M - MODULAR EXP. JOINT SYSTEM ONE-CELL (M)
ITEM 566.02M - MODULAR EXP. JOINT SYSTEM TWO-CELL (M)
ITEM 567.31M - MODIFIED ARMORED JOINT SYSTEM W/ COMP. SEAL TYPE A1 (m)
ITEM 567.32M - MODIFIED ARMORED JOINT SYSTEM W/ COMP. SEAL TYPE A2 (m)
ITEM 567.35M - MODIFIED ARMORED JOINT SYSTEM W/ COMP. SEAL TYPE A5 (m)
ITEM 567.36M - MODIFIED ARMORED JOINT SYSTEM W/ COMP. SEAL TYPE A6 (m)
ITEM 16567.640001M - REPLACE COMPRESSION SEAL FOR EXISTING BRIDGE JOINTS (m)

ALL DIMENSIONS ARE IN m UNLESS OTHERWISE NOTED

AS BUILT REVISIONS

SIGNATURE DATE

INTERSTATE 481 VARIOUS BRIDGES

BRIDGE JOINT TABLE

STATE OF NEW YORK
DEPARTMENT OF TRANSPORTATION

FILENAME	REGION	DATE	DRAWING NO.
305613AJJA1	3	10/02	JT-2

DESIGN SUPERVISOR ___ JOB MANAGER ___ DESIGNED BY ___ DRAFTED BY ___ CHECKED BY ___ ESTIMATED BY ___

FED ROAD REG. NO.	STATE	CONTRACT NO.	SHEET NO.	TOTAL SHEETS
1	N.Y.	D259214	365	432

BRIDGE REHABILITATION PROJECT (ELEMENT SPECIFIC)

VARIOUS BRIDGES ON INTERSTATE 481

TOWNS OF DEWITT AND CICERO

ONONDAGA COUNTY

P.I.N. 305613 | B.I.N. ALL BIN'S

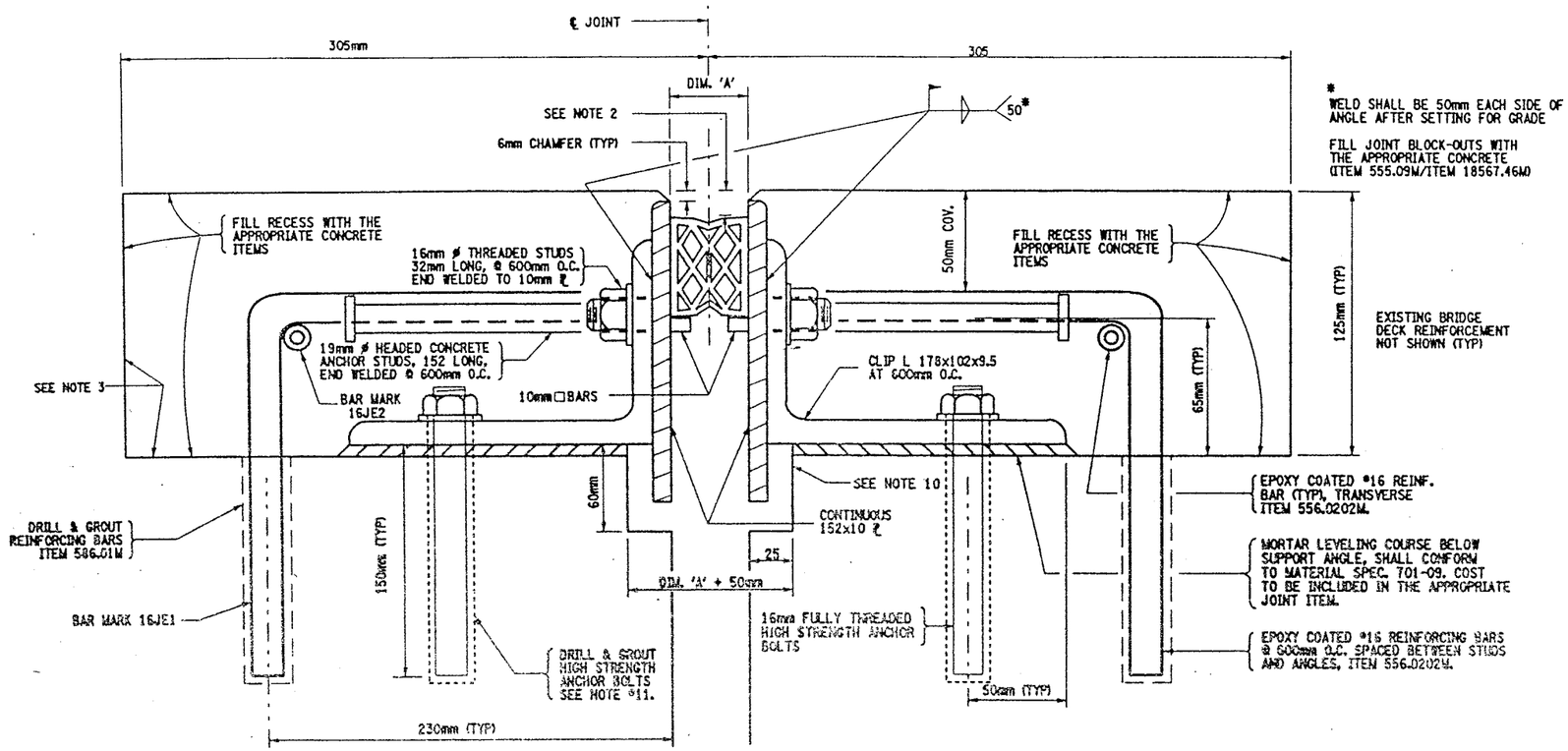

* WELD SHALL BE 50mm EACH SIDE OF ANGLE AFTER SETTING FOR GRADE

FILL JOINT BLOCK-OUTS WITH THE APPROPRIATE CONCRETE (ITEM 555.09M/ITEM 18567.46M)

MODIFIED ARMORED COMPRESSION JOINT DETAIL

FOR INSTALLATION LOCATIONS SEE JOINT TABLE

NOT TO SCALE

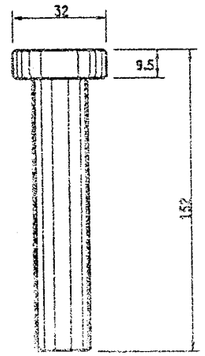

DETAIL OF HEADED CONCRETE ANCHOR STUD

NOT TO SCALE

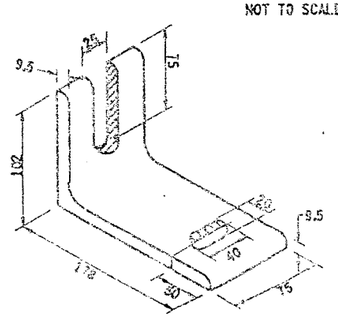

DETAIL OF CLIP ANGLE

NOT TO SCALE

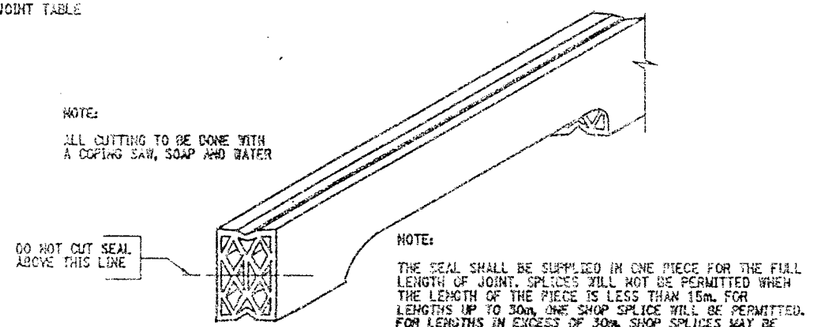

DETAIL FOR CUTTING SEAL

NOT TO SCALE

EPOXY POLYSULFIDE GROUT NOTE:

CONTRACTOR MAY WITH THE APPROVAL OF THE ENGINEER USE MATERIAL SPECIFICATION 721-03 EPOXY POLYSULFIDE GROUT, AT THE RECESSES. INSTEAD OF THE 12 HOUR CONTINUOUS PREWETTING REQUIREMENTS (PROJECT PROPOSAL). CONTRACTOR MUST ENSURE PROPER CONSTRUCTION PRACTICES ARE FOLLOWED WHEN USING THIS GROUT. THE USE OF EPOXY POLYSULFIDE GROUT SHALL BE AT NO ADDITIONAL COST TO THE STATE.

SEALS (mm)			ARMORED JOINT SYSTEM	
TYPE	NOMINAL WIDTH	DIM. "A" @ 20°C.	TYPE	END CONDITION
1	44	25	A1	Fixed End Only
2	51	30	A2	Exp. up to 18 m
3	64	38	A3	Exp. over 18 m to 23 m
4	76	44	A4	Exp. over 23 m to 27 m
5	89	52	A5	Exp. over 27 m to 38 m
6	102	60	A6	Exp. over 38 m to 46 m

Maximum Skew Limits: Fixed End - No Limit
Exp. End - 45° A2 thru A6

GENERAL NOTES:

1. THE TEMPERATURE OF THE BRIDGE MUST BE TAKEN ON THE STRUCTURAL STEEL SURFACE TO DETERMINE THE TEMPERATURE CORRECTION FOR THE JOINT OPENINGS.
2. THIS DEPTH SHALL BE INDICATED ON THE SHOP DRAWINGS AND SHALL BE SUCH THAT WHEN THE SEAL IS COMPRESSED TO 50% OF ITS NORMAL WIDTH, THE TOP OF THE SEAL SHALL BE NOT LESS THAN 6mm NOR MORE THAN 19mm BELOW THE TOP OF THE ROADWAY.
3. RECESSES RECEIVING ITEM 555.09M, AFTER SURFACE PREPARATION, THOROUGHLY WET THE CONCRETE SURFACE AND ALL POROUS SURFACES TO BE IN CONTACT WITH NEW CONCRETE, FOR 12 HOURS. NOTE THE USE OF MATERIAL SPECIF. 705-22 PORTLAND CEMENT MORTAR BONDING GROUT HAS BEEN ELIMINATED, SEE INSERT IN PROJECT PROPOSAL.
4. A WATER-TIGHT INTEGRITY TEST SHALL BE PERFORMED BY THE CONTRACTOR AT ALL COMPRESSION SEAL JOINT INSTALLATIONS. THE FOLLOWING TEST PARAMETERS SHALL BE INCORPORATED IN THE TEST:
   1. A 15 MINUTE MINIMUM PERIOD OF STANDING WATER, WITH A 25mm MINIMUM DEPTH SHALL BE USED.
   2. IN ADDITION, IN LOCATIONS OF COPED AREAS OF THE SEAL, BENDS, ETC., WATER PRESSURE SHALL BE APPLIED, TO THE SATISFACTION OF THE E.I.C. FOR A 15 MINUTE PERIOD.
   3. LIMITS OF TEST AREA SHALL BE FROM FACE OF CURB TO FACE OF CURB ON THE DECK SURFACE.
5. NO PAYMENT WILL BE MADE TO THE CONTRACTOR FOR THE JOINT IF, IN THE OPINION OF THE ENGINEER, THE INSTALLED JOINT LEAKS WITHIN THE 15 MINUTE TEST PERIOD.
6. PRIOR TO THE START OF WORK AT EACH JOINT, THE CONTRACTOR SHALL SUBMIT A WRITTEN PLAN FOR THE SPECIFICS OF THE TESTING, INCLUDING CONTAINMENT OF THE WATER AND THE METHOD TO BE USED FOR ACCESS BY THE E.I.C. TO THE BOTTOM OF THE JOINT BEING TESTED.
7. THE COST OF ALL LABOR, EQUIPMENT AND MATERIALS REQUIRED FOR THE TESTING WHICH INCLUDES, BUT IS NOT LIMITED TO:
   1. A CONTAINMENT SYSTEM FOR THE TEST WATER.
   2. PROVISIONS FOR E.I.C. ACCESS TO THE BOTTOM OF THE JOINT.

   SHALL BE INCLUDED IN THE PRICE BID FOR THE RESPECTIVE JOINT ITEMS.
8. THE COST OF ALL LABOR, EQUIPMENT, AND MATERIALS TO INSTALL THE NEW JOINT SHALL BE INCLUDED IN THE UNIT PRICE BID FOR THE APPROPRIATE JOINT ITEM.
9. MORTAR LEVELING COURSE SHALL CONFORM TO MATERIAL SPECIFICATION 701-09 AND SHALL BE INCLUDED IN THE PRICE BID FOR THE APPROPRIATE JOINT ITEM.
10. THE DIMENSIONS OF THE REMOVAL AREA UNDER THE 152x10 PLATES ARE SHOWN TO ALLOW SPACE FOR THE PLATES TO REST FREELY. IF THERE IS ALREADY ADEQUATE SPACE, NO CONCRETE REMOVAL OR REPLACEMENT IS REQUIRED IN THIS AREA.
11. 16 mm ⌀ ASTM A325M ANCHOR BOLT TO BE DRILLED AND GROUTED IN PLACE IN ACCORDANCE WITH THE REQUIREMENTS OF SUB-SECTION 586-3.02, GROUTING MATERIALS SHALL BE IN ACCORDANCE WITH MATERIALS SUB-SECTION 701-07 ANCHORING MATERIALS-CHEMICALLY CURING. HOLES TO BE DRILLED TO THE DIAMETER AND DEPTH RECOMMENDED BY THE MANUFACTURER OF THE GROUTING MATERIAL MIN. DEPTH OF 150 mm). THE COST OF THE ANCHORS, INCLUDING DRILLING AND GROUTING, SHALL BE INCLUDED IN THE UNIT PRICE BID FOR THE APPROPRIATE JOINT SYSTEM ITEM.
12. IT IS DESIRABLE TO HAVE THE ARMORED JOINT WITH ITS COMPRESSION SEAL ASSEMBLED IN THE SHOP AND DELIVERED TO THE JOB SITE ALL SET FOR INSTALLATION IN ITS PREFORMED RECESS IN THE STRUCTURAL SLAB. IN CASES WHERE THE ARMORED JOINT CANNOT BE ASSEMBLED IN THE SHOP, DUE TO ITS EXCESSIVE LENGTH CAUSING SHIPPING PROBLEMS, THE JOINT SHALL BE SEALED WITH THE COMPRESSION SEAL BEFORE THE STRUCTURE IS OPENED TO TRAFFIC (INCLUDING CONSTRUCTION TRAFFIC, AND BEFORE DIS CONTINUING OPERATIONS WHEN WORK IS SUSPENDED DURING THE WINTER.

LIST OF ITEMS USED:

ITEM 555.09M - STRUCT. CONCRETE, CLASS "HP" (CM)
ITEM 556.0202M - EPOXY COATED BAR REINF. FOR STRUCT. (Kg)
ITEM 567.31M - MOD. ARMORED JOINT SYSTEM W/ COMP. SEAL TYPE A1 (m)
ITEM 567.32M - MOD. ARMORED JOINT SYSTEM W/ COMP. SEAL TYPE A2 (m)
ITEM 567.35M - MOD. ARMORED JOINT SYSTEM W/ COMP. SEAL TYPE A5 (m)
ITEM 567.36M - MOD. ARMORED JOINT SYSTEM W/ COMP. SEAL TYPE A6 (m)
ITEM 18567.46M - ELASTOMERIC CONC. FOR BRIDGE JT. SYSTEMS (M)
ITEM 586.01M - DRILL & GROUT REINF. BARS (mm)

ALL DIMENSIONS ARE IN mm UNLESS OTHERWISE NOTED

AS BUILT REVISIONS

SIGNATURE DATE

INTERSTATE 481

COMPRESSION SEAL JOINT DETAILS

STATE OF NEW YORK
DEPARTMENT OF TRANSPORTATION

FILENAME	REGION	DATE	DRAWING
305613AJJA1	3	10/02	

DESIGN SUPERVISOR ____ JOB MANAGER ____ DESIGNED BY ____ ESTIMATED BY ____ DRAFTED BY ____ CHECKED BY ____ CHECKED BY ____

FED ROAD REG. NO.	STATE	CONTRACT NO.	SHEET NO.	TOTAL SHEETS
1	N.Y.	D259214	407	432

BRIDGE REHABILITATION PROJECT (ELEMENT SPECIFIC)
VARIOUS BRIDGES ON INTERSTATE 481
TOWNS OF DEWITT AND CICERO
ONONDAGA COUNTY
P.I.N. 305613 B.I.N. 1072792

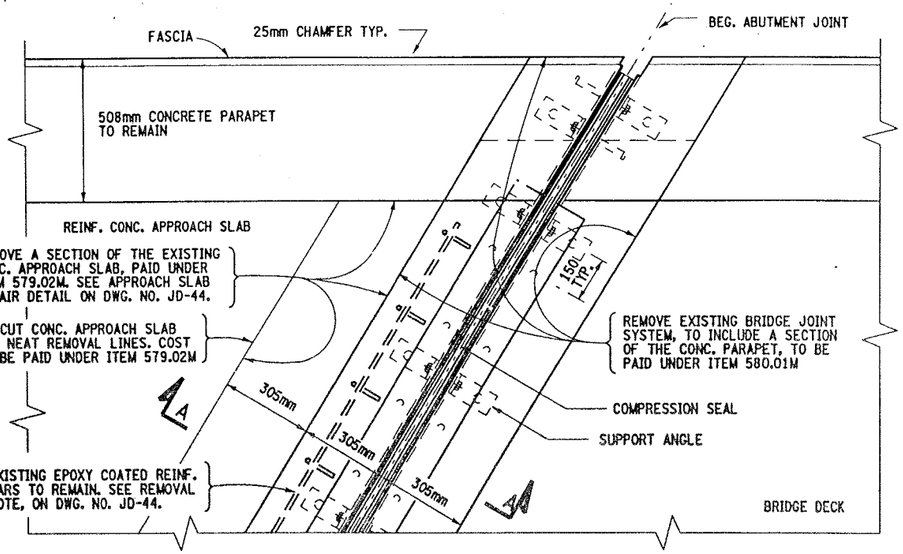

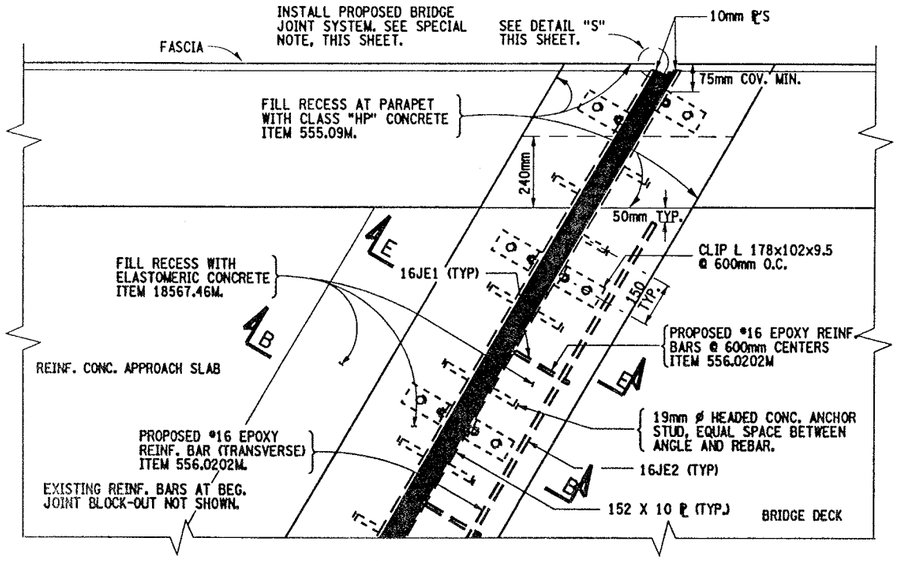

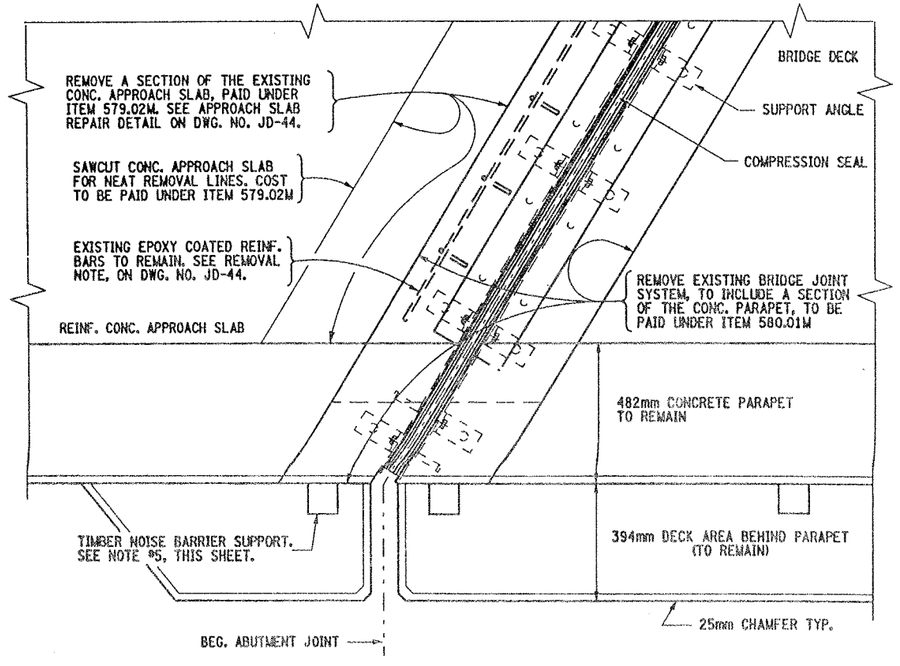

EXISTING ABUTMENT JOINT PLAN VIEW

BIN 1072792 - BEG. ABUT. (EAST ABUT.) SHOWN
END ABUT. (WEST ABUT.) SIMILAR

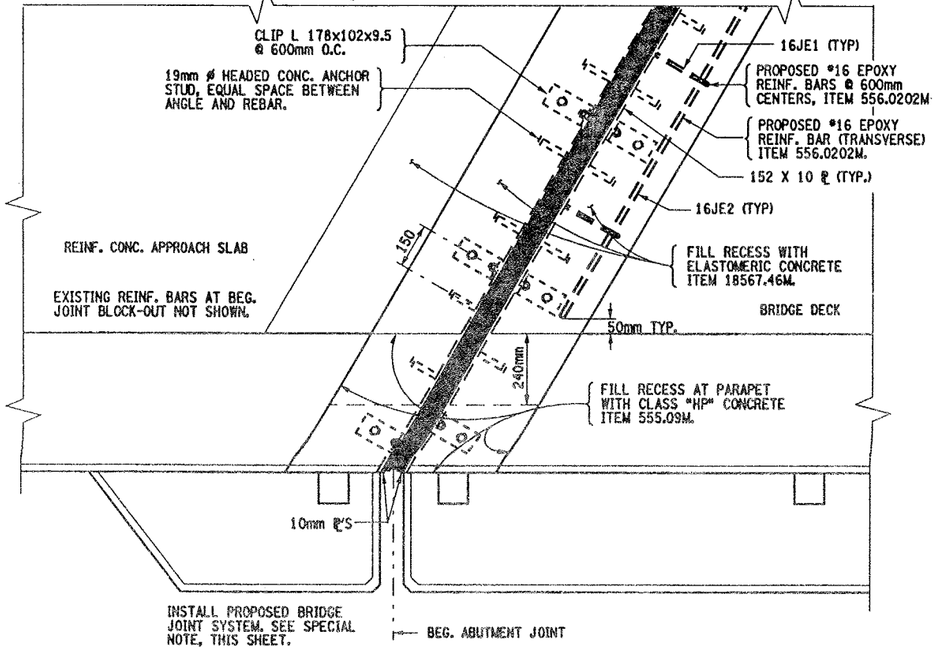

PROPOSED ABUTMENT JOINT PLAN VIEW

BIN 1072792 - BEG. ABUT. (EAST ABUT.) SHOWN
END ABUT. (WEST ABUT.) SIMILAR

NOTES:

1. REFER TO DWG. NO. JD-1 FOR PROPOSED JOINT DETAILS AND ALL NOTES SHALL APPLY.
2. FOR SECTION VIEWS SEE DWG. NO. JD-44.
3. REFER TO DWG. NO. JT-2 FOR PROPOSED BRIDGE JOINT INSTALLATION LOCATIONS.
4. BOTH STRUCTURES HAVE A 17°-02'-59.4" SKEW ANGLE.
5. BIN 1072792 NB - HAS A TIMBER NOISE BARRIER ATTACHED TO THE NORTH FASCIA (LEFT SIDE), THIS TIMBER NOISE BARRIER TO REMAIN. IT MAY BE NECESSARY TO TEMPORARILY REMOVE THE SUPPORT BRACKETS TO FACILITATE INSTALLATION OF THE PROPOSED BRIDGE JOINT.

   ANY ADDITIONAL SUPPORT TO THE TIMBER NOISE BARRIER DEEMED NECESSARY BY THE ENGINEER, DURING THIS REMOVAL OF THE SUPPORT BRACKETS SHALL BE INCLUDED IN THE PRICE BID FOR ITEM 580.01M.
6. BIN 1072792 - 481 NB/THOMPSON RD.
   BRIDGE JOINT REPAIRS/REPLACEMENT SHALL BE CONDUCTED UTILIZING NIGHT-TIME CONSTRUCTION TECHNIQUES FOR THIS BRIDGE ONLY. WHEN EVER THE JOINT BLOCK-OUT CONCRETE IS REMOVED OR CURING. STEEL ROAD PLATES SHALL BE USED. REFER TO DWG. NO. AA-RP1 FOR ROAD PLATE DETAILS.
7. SEE DRAWING NO. JD-47 FOR BIN 1072791 DETAILS. @BIN 1072792 SHOWN, BIN 1072791 SIMILAR)

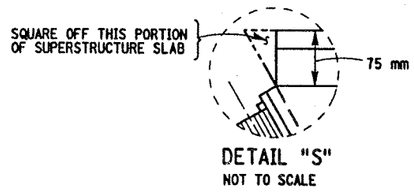

DETAIL "S"
NOT TO SCALE

SPECIAL NOTE:

BIN 1072792 - INSTALL ITEM 567.35M AT BEG. ABUT. JOINT
INSTALL ITEM 567.31M AT END ABUT. JOINT.

ITEMS USED:

ITEM 556.0202M	- EPOXY-COATED BAR REINF. FOR STRUCT. (Kg)
ITEM 555.09M	- STRUCT. CONCRETE, CLASS "HP" (CM)
ITEM 567.31M	- MOD. ARMORED JOINT SYSTEM W/COMP. SEAL TYPE A1 (M)
ITEM 567.35M	- MOD. ARMORED JOINT SYSTEM W/COMP. SEAL TYPE A5 (M)
ITEM 18567.46M	- ELASTOMERIC CONCRETE FOR BRIDGE JOINT SYSTEMS (M)
ITEM 579.02M	- REINFORCED BAR EXPOSURE (SM)
ITEM 580.01M	- REMOVAL OF STRUCT. CONCRETE (CM)

ALL DIMENSIONS ARE IN mm UNLESS OTHERWISE NOTED

AS BUILT REVISIONS

SIGNATURE DATE

INTERSTATE 481 NB
OVER
THOMPSON ROAD

BRIDGE JOINT DETAILS

STATE OF NEW YORK
DEPARTMENT OF TRANSPORTATION

FILENAME	REGION	DATE	DRAWING NO.
305613AJJA1	3	10/02	JD-43

CHECKED BY
DRAFTED BY
DESIGNED BY
JOB MANAGER
DESIGN SUPERVISOR
ESTIMATED BY

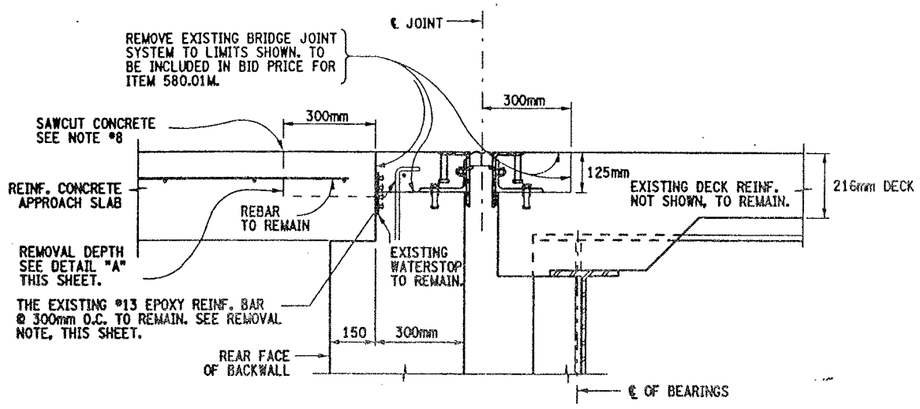

SECTION A-A
EXISTING ABUTMENT JOINT
NOT TO SCALE

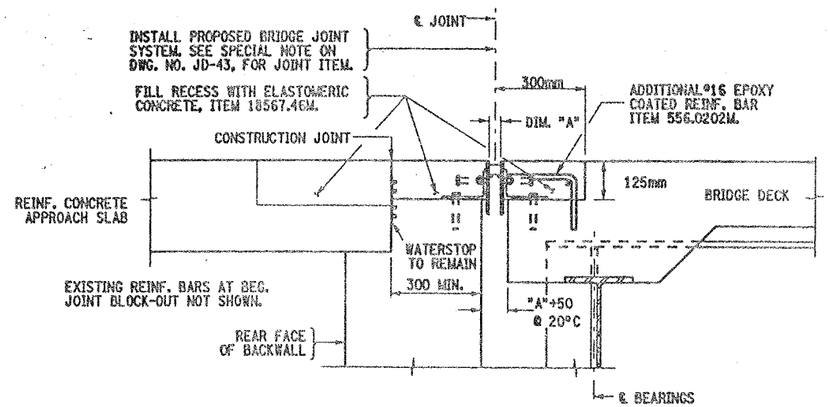

PROPOSED ABUTMENT JOINT
SECTION B-B
NOT TO SCALE

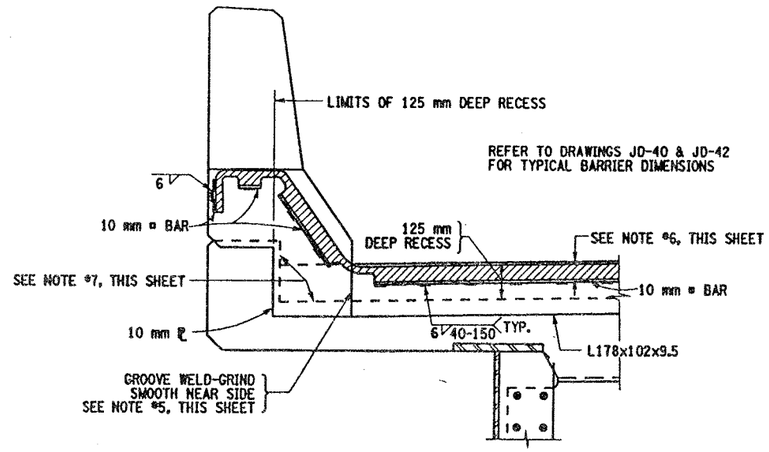

PROPOSED ABUTMENT JOINT
SECTION C-C (CONCRETE TRAFFIC BARRIER)
(REFER TO DWG. NO. JD-40 FOR OPPOSITE FASCIA DETAIL)
NOT TO SCALE

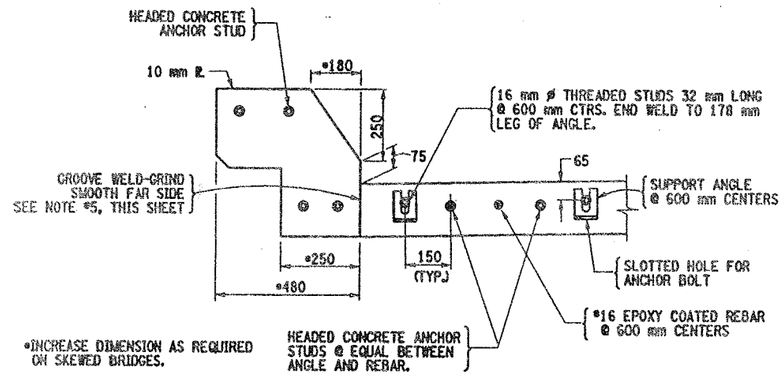

PROPOSED ABUTMENT JOINT
SECTION D-D (CONCRETE TRAFFIC BARRIER)
(ONLY THE STEEL SHOWN)

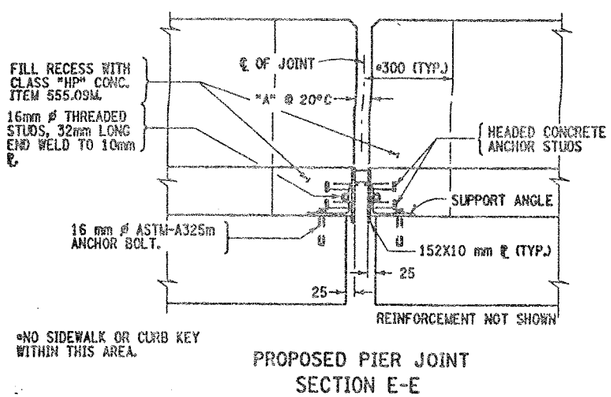

PROPOSED PIER JOINT
SECTION E-E
NOT TO SCALE

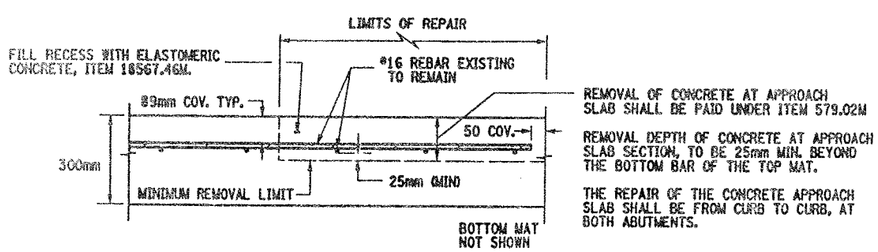

APPROACH SLAB REPAIR
DETAIL "A"
NOT TO SCALE

FED ROAD REG. NO.	STATE	CONTRACT NO.	SHEET NO.	TOTAL SHEETS
1	N.Y.	D259214	408	432

BRIDGE REHABILITATION PROJECT (ELEMENT SPECIFIC)
VARIOUS BRIDGES ON INTERSTATE 481
TOWNS OF DEWITT AND CICERO
ONONDAGA COUNTY
P.I.N. 305613 | B.I.N. 1072792

REMOVAL NOTE:

EXISTING EPOXY COATED REINF. BARS ENCOUNTERED AT THE JOINT BLOCK-OUTS, SHALL REMAIN. CARE SHALL BE TAKEN DURING REMOVAL OPERATIONS, NOT TO DAMAGE THE REINFORCEMENT BARS.

PRIOR TO PLACEMENT OF NEW CONCRETE THE EXISTING EPOXY BARS SHALL BE CLEANED AND ANY FIELD REPAIRS DEEMED NECESSARY BY THE ENGINEER, BE MADE AS PER SECTION 556-3.02(C) OF STANDARD SPECIFICATIONS. TO BE INCLUDED IN PRICE BID FOR ITEM 580.01M.

NOTES:

1. ACTUAL BRIDGE JOINT BLOCK-OUT DIMENSIONS MAY VARY. REMOVAL LIMITS SHALL BE TO EXISTING BLOCK-OUT LOCATIONS, AOBE.
2. EXISTING WATERSTOPS SHALL REMAIN.
3. FOR CALCULATION OF "A" DIMENSION REFER TO DWG. NO. JD-1.
4. REFER TO DWG. NO. JD-43 FOR PROPOSED PARTIAL PLAN VIEWS.
5. ALL WELDS SHALL BE GROUND SMOOTH TO THE SATISFACTION OF THE ENGINEER, ON SEAL CONTACT SIDE OF EDGE BEAM.
6. THIS DEPTH SHALL BE INDICATED ON THE SHOP DRAWINGS AND SHALL BE SUCH THAT WHEN THE SEAL IS COMPRESSED TO 50% OF ITS NOMINAL WIDTH, THE TOP OF THE SEAL SHALL BE NOT LESS THAN 6 mm NOR MORE THAN 19 mm BELOW THE TOP OF ROADWAY.
7. RECESSES RECEIVING ITEM 555.09M, AFTER SURFACE PREPARATION, THOROUGHLY WET THE CONCRETE SURFACES AND ALL POROUS SURFACES TO BE IN CONTACT WITH NEW CONCRETE FOR 12 HOURS. NOTE, THE USE OF MATERIAL SPECIF. 705-22 PORTLAND CEMENT MORTAR BONDING GROUT HAS BEEN ELIMINATED, (PROJECT PROPOSAL).
8. SAWCUT CONCRETE APPROACH SLAB TO PRODUCE NEAT REMOVAL LINES, COST BE TO INCLUDED IN PRICE BID FOR ITEM 579.02M.
9. THE CONCRETE REMOVAL AT THE APPROACH SLAB SHALL CONFORM TO STANDARD SPECIF. 579-3.02, TO BE PAID UNDER ITEM 579.02M. (AT APPROACH SLABS ONLY)

ITEMS USED:

ITEM 555.09M - STRUCT. CONCRETE, CLASS "HP" (CM)
ITEM 556.0202M - EPOXY-COATED BAR REINF. FOR STRUCT. (Kg)
ITEM 18567.46M - ELASTOMERIC CONCRETE FOR BRIDGE JOINT SYSTEMS (LF)
ITEM 579.02M - REINFORCED BAR EXPOSURE (SM)
ITEM 580.01M - REMOVAL OF STRUCT. CONCRETE (CM)

ALL DIMENSIONS ARE IN mm UNLESS OTHERWISE NOTED

AS BUILT REVISIONS

SIGNATURE DATE

INTERSTATE 481 NB
OVER
THOMPSON ROAD

BRIDGE JOINT DETAILS

STATE OF NEW YORK
DEPARTMENT OF TRANSPORTATION

FILENAME	REGION	DATE	DRAWING NO.
305613AJJA1	3	10/02	JD-44

DESIGN SUPERVISOR ____ JOB MANAGER ____ DESIGNED BY ____ ESTIMATED BY ____ DRAFTED BY ____ CHECKED BY ____

BIN: 1072792
I481 NB / Thompson Rd

DECK DETERIORATION PLAN

NOT TO SCALE

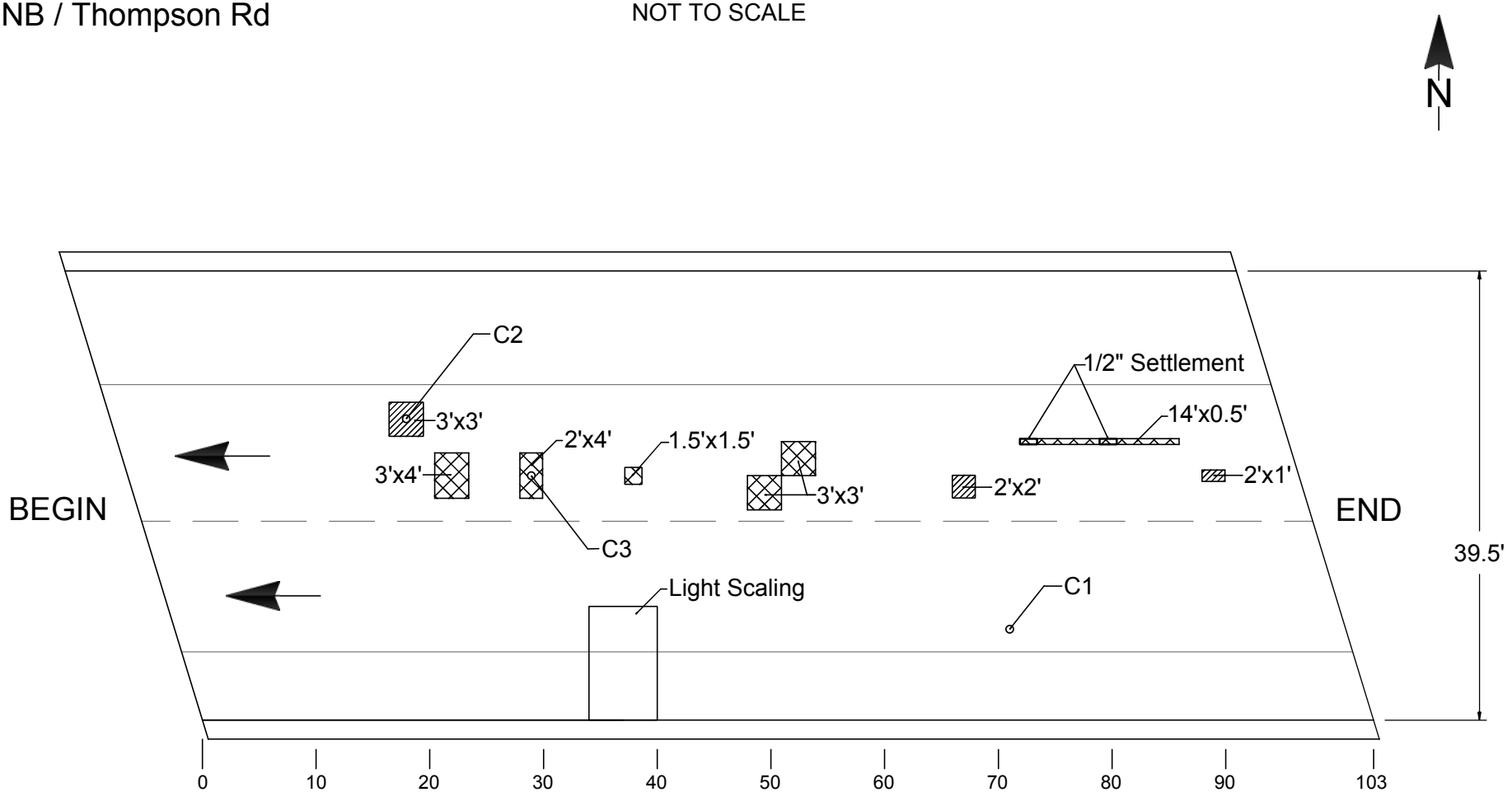

TOTAL DAMAGED AREA EQUALS 62.25 SF WHICH IS 1.6% OF DECK SURFACE

LEGEND

- Hollow Concrete
- Patch
- Coring location
- Crack

IN-DEPTH PHOTO DOCUMENTATION

BIN: 1072792
I481 NB / Thompson Rd

IN-DEPTH INSPECTION
PHOTO LOCATION PLAN

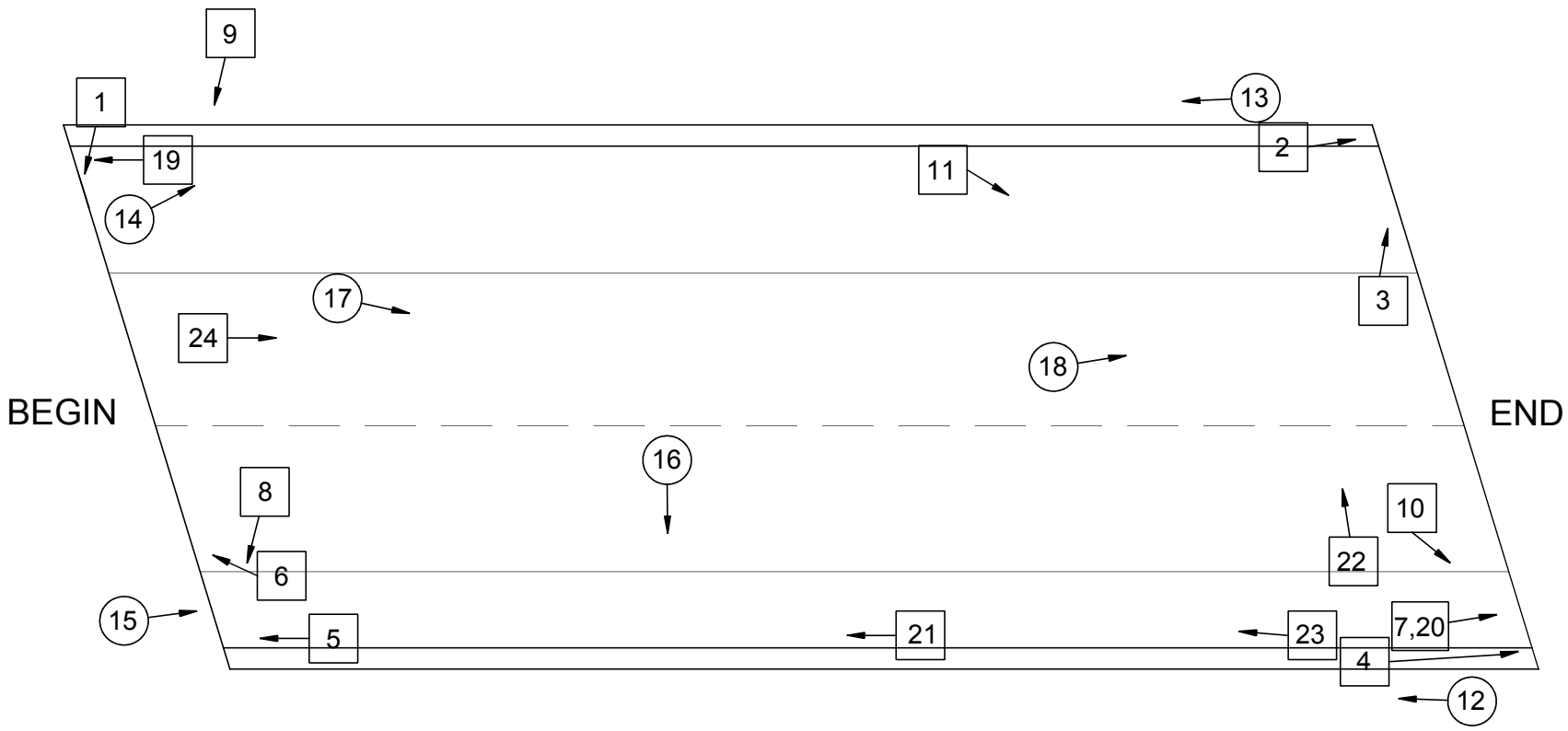

LEGEND

(XX) → Photo Above Deck

[XX] → Photo Below Deck

In-Depth Inspection Photos I-481 NB over Thompson Rd., BIN 1072792



DESCRIPTION: BEGIN PEDESTAL 1 FROM LEFT

PHOTO 1



DESCRIPTION: END SEAT AND PEDESTAL 1 FROM LEFT

PHOTO 2

In-Depth Inspection Photos I-481 NB over Thompson Rd., BIN 1072792



DESCRIPTION: END SEAT BAY 1 (R-L)

PHOTO 3



DESCRIPTION: END SEAT AT RIGHT

PHOTO 4



DESCRIPTION: BEGIN BACKWALL AT RIGHT

PHOTO 5



DESCRIPTION: BEGIN BACKWALL BAY 4

PHOTO 6



DESCRIPTION: END BACKWALL AT RIGHT

PHOTO 7



DESCRIPTION: BEGIN STEM AT RIGHT

PHOTO 8



DESCRIPTION: BEGIN ABUTMENT

PHOTO 9



DESCRIPTION: END STEM AT RIGHT

PHOTO 10



DESCRIPTION: END ABUTMENT

PHOTO 11



DESCRIPTION: RIGHT FASCIA & PARAPET (E-B)

PHOTO 12



DESCRIPTION: LEFT FASCIA & PARAPET (E-B)

PHOTO 13



DESCRIPTION: LEFT PARAPET NEAR BEGIN

PHOTO 14



DESCRIPTION: DECK FROM BEGIN

PHOTO 15



DESCRIPTION: RIGHT LANE AT 37' (L-R)

PHOTO 16



DESCRIPTION: LEFT LANE NEAR BEGIN (B-E)

PHOTO 17



DESCRIPTION: LEFT LANE NEAR END (B-E)

PHOTO 18



DESCRIPTION: DECK AT BEGIN LEFT

PHOTO 19



DESCRIPTION: DECK AT END RIGHT

PHOTO 20



DESCRIPTION: DECK AT RIGHT FROM MIDSPAN (E-B)

PHOTO 21



DESCRIPTION: END BAY 4 (R-L)

PHOTO 22

In-Depth Inspection Photos I-481 NB over Thompson Rd., BIN 1072792



DESCRIPTION: G5 (E-B)

PHOTO 23



DESCRIPTION: FRAMING (B-E)

PHOTO 24

ASBESTOS SAMPLING SURVEY

Asbestos Sampling Survey

Location:

BIN 1072792
Interstate Route I-481 North Bound
over Thompson Road

Prepared for:

New York State
Department of Transportation

PIN 3056.13.111

LaBella Project No. 201001

August 2001

Table of Contents

Page

I. Project Summary 1

II. Site Description 1

III. Inspection Procedures 1

IV. Results 2

Certification 2

Figures and Table

I. Project Summary

In accordance with conditions of Term Agreement D012606, LaBella Associates, P.C. conducted an asbestos sampling survey of the Interstate Route I-481 north bound bridge over Thompson Road. Based on laboratory analyses of bulk samples collected, no asbestos-containing materials were identified.

II. Site Description

The Site is located in Onondaga County, New York. For the purpose of this report, the Site consists of the Interstate Route I-481 north bound bridge over Thompson Road. (See attached FIGURE 1 - Site Location Map).

III. Inspection Procedures

The following procedures were used to obtain the data for this Report:

A. A review of record drawings supplied by Region 3 personnel and a visual inspection of the subject structure were conducted to identify potential visible/accessible sources of asbestos-containing materials. Observations and notes were made to provide a description of the structure, and an estimate of the approximate amount, length, or area of ACM present.

B. Physical or operational constraints, which might affect the removal of the ACM, were identified and reported.

C. Bulk samples of suspected ACM were collected during the site inspection of the subject structure. Samples were taken from each homogeneous area that may contain ACM.

D. Samples were submitted for analysis. Preliminary PLM analyses of NOB materials were performed by LaBella Laboratories, a NYSDOH approved laboratory, to determine the presence and percentage of asbestos in each sample. TEM analyses of NOB materials, if necessary, were performed by AMA Analytical, Inc.

E. Lab results were used to determine the approximate location, type, and amount of the verified ACM.

F. A drawing of the structure at the Site was created, in order to show sample locations and the approximate locations and amounts of confirmed ACM observed in accessible locations.

Only accessible areas were inspected. Inaccessible areas, such as areas within the bridge or the approaches to the bridge were not included in this inspection. No investigation was conducted by LaBella Associates to determine the presence of underground utilities on or in the immediate vicinity of the Site. Actual sample locations are shown in the attached FIGURE 2. Results of bulk sample analyses are tabulated in the attached TABLE.

IV. Results

BIN 1072792 Interstate Route I-481 North Bound over Thompson Road

Based on laboratory analyses of bulk samples collected, no asbestos-containing materials were identified.

Certification

LaBella Associates, P.C. certifies the accuracy of this report, to the best of our knowledge, based on the information collected as described in the Inspection Procedures Section of this investigation.

Figures & Table

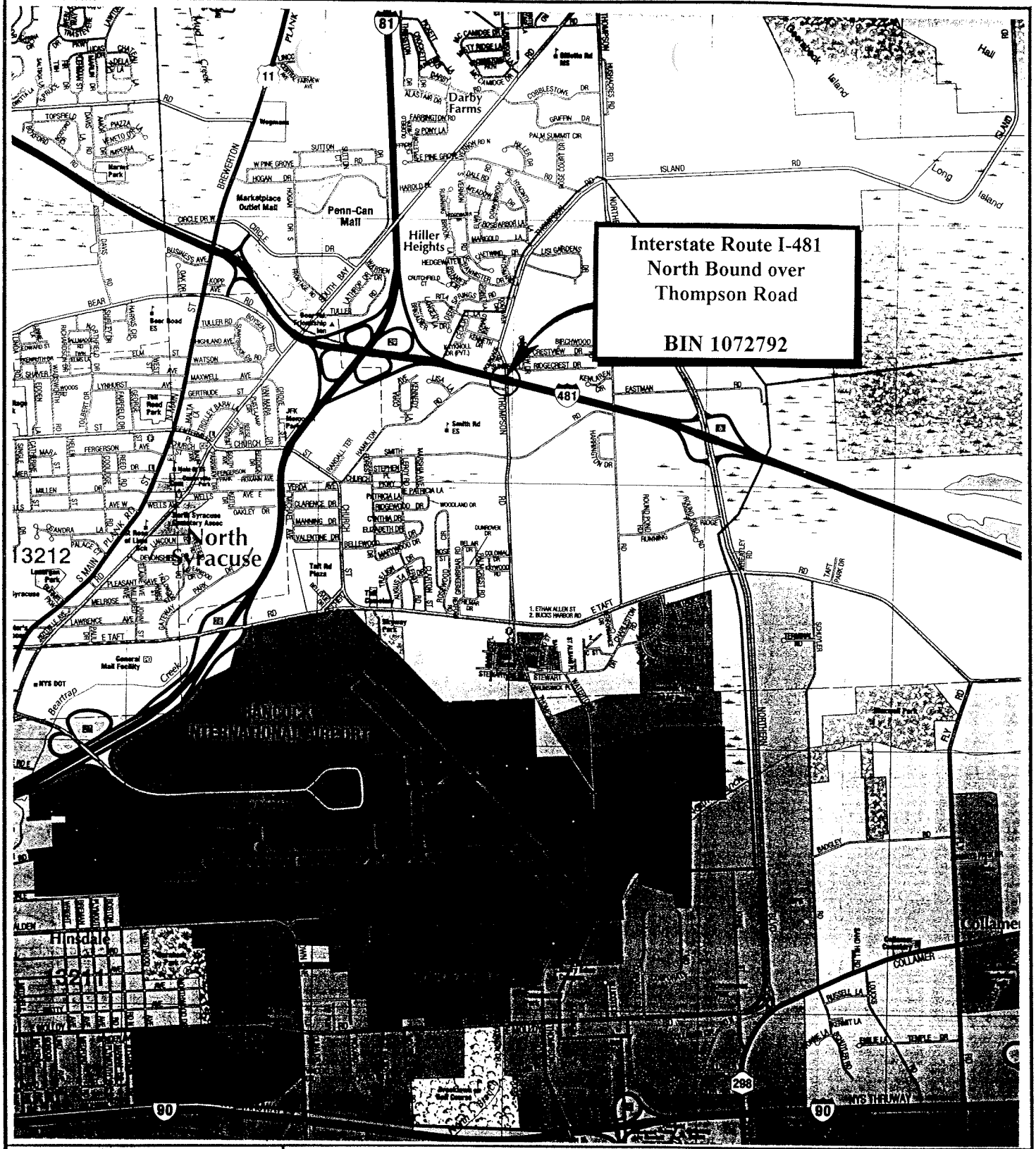

FIGURE 1
Site Location Map

Interstate Route I-481 North Bound over Thompson Road Onondaga County, New York

LABELLA

PROJECT NO. 201001

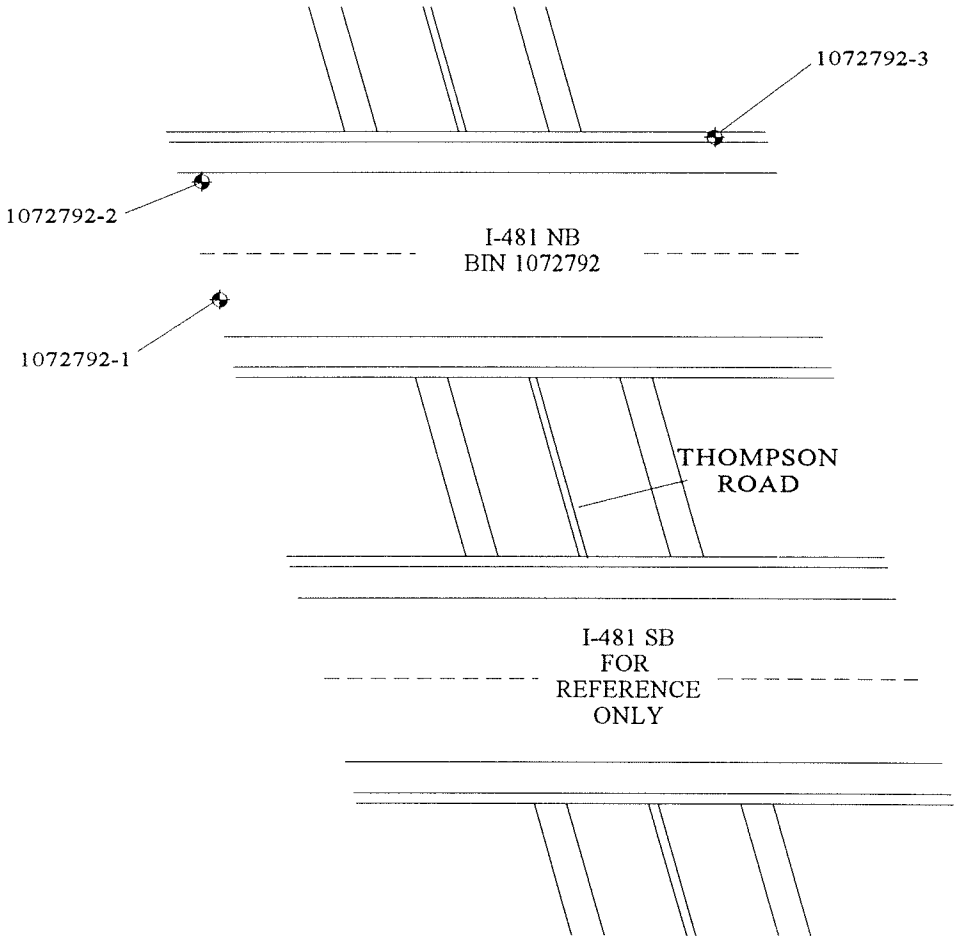

NOTE: NO ASBESTOS-CONTAINING MATERIALS IDENTIFIED.

LEGEND

◆ 1072792-1 SAMPLE LOCATION

NORTH	PROJECT TITLE: ASBESTOS SAMPLING SURVEY 19 BRIDGES ALONG INTERSTATE I-481 ONONDAGA COUNTY, NEW YORK	PROJECT NO. 201001 PIN 3056.13.111
	FIGURE TITLE: FIGURE 2 BIN 1072792 I-481 NB OVER THOMPSON ROAD SAMPLE LOCATIONS & CONFIRMED ACM	NOT TO SCALE DATE: AUGUST, 2001

Bulk Sample Results Table

Asbestos Sampling Survey
BIN 1072792
Interstate Route I-481 North Bound
over Thompson Road
Onondaga County, New York
LaBella Project # 201001
PIN 3056.13.111

Sample #	Sample Location	Type of Material	Results % Asbestos	Amount of Material	Specification Item No.
1072792-1	East End of Bridge at Base of Fence	Gray Caulking Compound	None Detected	N/A	N/A
1072792-2	West End of Bridge Beneath Bearing	Bearing Pad	None Detected	N/A	N/A
1072792-3	West End of Bridge on Backwall	Gray Masonry Coating	None Detected	N/A	N/A

LATEST BIENNIAL INSPECTION REPORT

Inspection Date: 6/8/2012 RC: 33 BIN: 1072792

Bridge Ratings

Carried: 481I 481I33012136 Crossed: THOMPSON RD CR10 CheckValue: 1,783,254,139

Inspection Agency: 10 - NYSDOT Type of Inspection: 1 - BIENNIAL
GTMS: A02 -- Unpainted Steel - Stringer/Multi-Beam or Girder
POSTINGS: See Gen Rec Page 1 for Postings at time of inspection.
Further Investigation Needed: No
State Highway Number: 70-7 Milepoint: 14.99 AADT/Yr: 14378 / 2002
Orientation: 3 - East Political Unit: 0161 - Town of CICERO Year Built: 1986
Total Spans: 1 Ramp Bridge Attached To Span: NA BIN: NA
General Recommendation: 6 Computed Condition Rating: 5.683

Abutment Ratings:	**Beg Abut**	**End Abut**
Joint with Deck	5	5
Bearings, Bolts, Pads	6	6
Seats and Pedestals	6	6
Backwall	6	6
Stem (Breastwall)	6	6
Erosion or Scour	6	6
Footings	9	9
Piles	8	8
Recommendation	6	6

Wingwall Ratings:	**Beg Abut**	**End Abut**
Walls	6	6
Footings	9	9
Erosion or Scour	6	6
Piles	8	8

Channel Ratings:	**Channel**
Stream Alignment	8
Erosion and Scour	8
Waterway Opening	8
Bank Protection	8

Approach Ratings:	**Approaches**
Drainage	5
Embankment	6
Settlement	6
Erosion	5
Pavement	4
Guide Railing	6

Number of Flags Issued:

RED: 0 Yellow: 0 Safety: 0

Vulnerability Reviews Recommended: 1=Yes, 2=No, 3=NA, X=NotActive

Hydraulic: 3	Overload: X	Steel: 2
Collision: 2	Concrete: X	Seismic: X

Inspector's Signature: CheckValue: 1,783,254,139 Date: 6/8/2012

Peter Riehlman,PE () (Inspector ID:3000052)

Signed copy of this inspection report is available in the appropriate NYSDOT Regional Office

Reviewed By: Date: 8/7/2012

James R. Manning,PE () (QC ID:3000023)

Signed copy of this inspection report is available in the appropriate NYSDOT Regional Office

Inspection Date: 6/8/2012 RC: 33 BIN: 1072792

Span Ratings

Carried: 481I 481I33012136 Crossed: THOMPSON RD CR10 CheckValue: 1,783,254,139

Deck Element Ratings:	**001**
Wearing Surface	4
Curbs	8
Sidewalks, Fascias	6
Railings, Parapets	5
Scuppers	8
Gratings	8
Median	8
Mono Deck Surface	4

Superstructure Ratings:	**001**
Structural Deck	5
Primary Members	6
Secondary Members	6
Paint	4
Joints	8
Recommendation	6

Pier Ratings:	**001**
Bearings, Bolts, Pads	8
Pedestals	8
Top of Cap or Beam	8
Stem Solid Pier	8
Cap Beam	8
Pier Columns	8
Footings	8
Erosion or Scour	8
Piles	8
Recommendation	8

Utility Ratings:	**001**
Lighting	8
Sign Structure	8
Utilities and Support	8

Field Notes:

Field Date	Arrival	Departure	Temp (C)	Temp (F)	Weather Conditions
6/8/2012	9:00:00 AM	11:30:00 AM		70	ptly. cldy

Inspection Date: 6/8/2012 RC: 33 BIN: 1072792

Inspection Notes

Carried: 481I 481I33012136 Crossed: THOMPSON RD CR10 CheckValue: 1,783,254,139

Note ID: 331210727920000

Approaches: Pavement -- Rated 4, Was 4
Referenced Photos: "1"
2012- Concrete approach slabs are cracking along joint header with small spalls developing.
Minor asphalt cracking at edges of slabs.

Note ID: 331210727920001

Span 001 -- Deck Elements: Wearing Surface -- Rated 4, Was 4
Span 001 -- Deck Elements: Mono Deck Surface -- Rated 4, Was 4
Referenced Photos: "3"
2012- 4 patched areas,one of the patched areas spalled away slightly

Note ID: 331210727920002

Span 001 -- Superstructure: Primary Members -- Rated 6, Was 4
Referenced Photos: "4"
2012- The previous red flag was removed by maintenance as the previous crack area was ground out and dye penetranted.

Note ID: 331210727920003

Span 001 -- Superstructure: Paint -- Rated 4, Was 4
Referenced Photos: "2"
2012-Bottom flange and lower web of fascia girders are scaling.

Inspection Date: 6/8/2012 RC: 33 BIN: 1072792

Inspection Photos in Photo Number Order

Carried: 481I 481I33012136 Crossed: THOMPSON RD CR10 CheckValue: 1,783,254,139

End appr looking Lt



Photo Number: 1 Photo Filename: DSCN3874.jpg

Beg Rt fascia paint

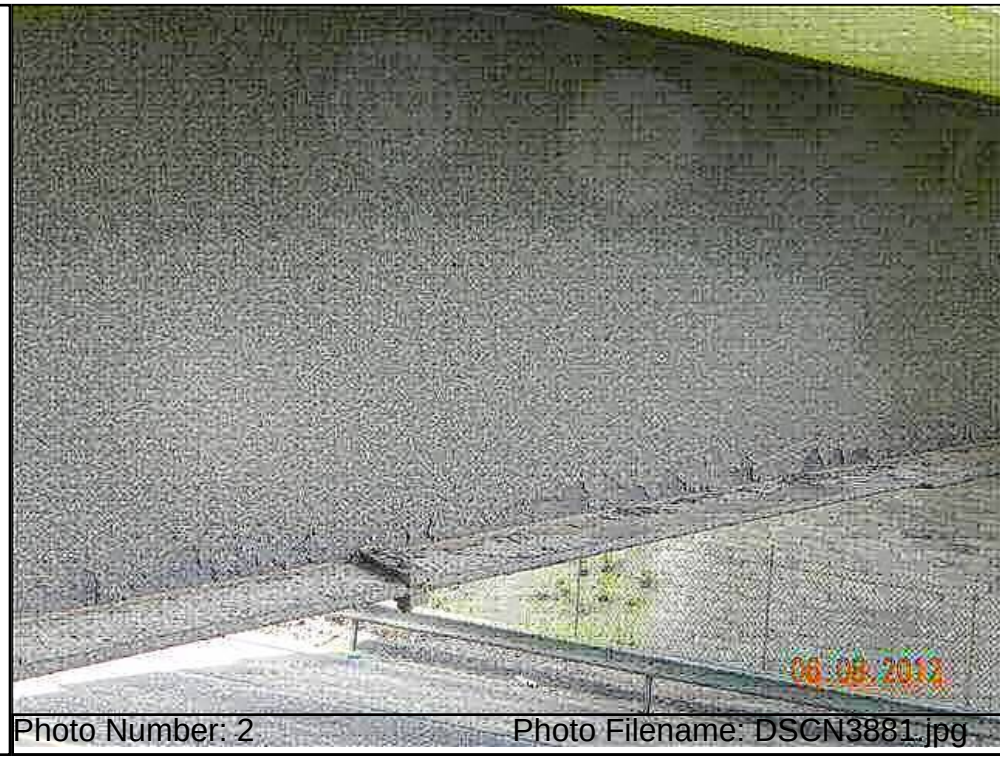

Photo Number: 2 Photo Filename: DSCN3881.jpg

Inspection Date: 6/8/2012 RC: 33 BIN: 1072792

Inspection Photos in Photo Number Order

Carried: 481I 481I33012136 Crossed: THOMPSON RD CR10 CheckValue: 1,783,254,139

WS looking toward Beg Lt



Photo Number: 3 Photo Filename: DSCN3878.jpg

G-1 Rt face and 3rd x-bracing

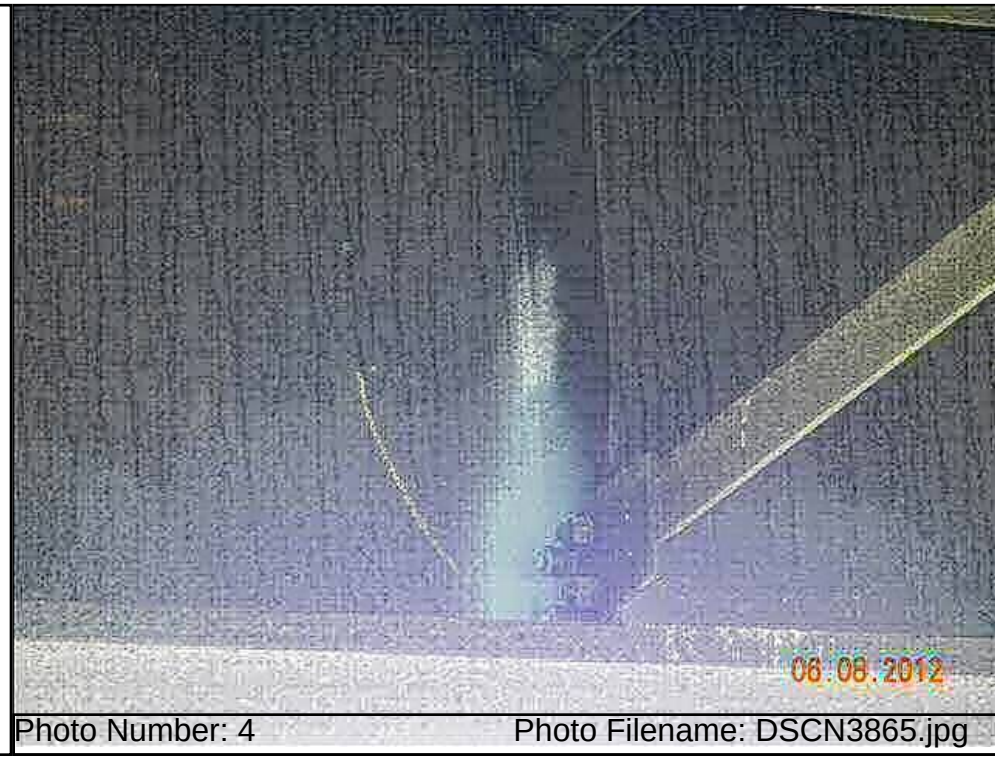

Photo Number: 4 Photo Filename: DSCN3865.jpg

Inspection Date: 6/8/2012 RC: 33 BIN: 1072792

Inspection Sketches in Sketch SysID Order

Carried: 481I 481I33012136 Crossed: THOMPSON RD CR10 CheckValue: 1,783,254,139

Sketch ID: 331210727920000 Sketch Filename: LdRatNCL.12

General Sketch for Bridge
Referenced Photos:

Region 3 LoadRatingFieldCheckForm

NYSDOT BRIDGE INSPECTION REPORT			
SHEET	1	OF	1

LOAD RATING FIELD CHECK FORM

BIN:	1072792	Insp. Date:	06/08/2012

Dead Load - Note Changes since Last load Rating or state "NONE":

NONE

Section Loss -Note Changes since Last load Rating or state "NONE":

NONE

Additional Notes:

NONE

Attachments:

Team Leader: Peter Riehlman

Inspection Date: 6/8/2012 RC: 33 BIN: 1072792

Gen. Rec., Postings, Federal Ratings, etc.

Carried: 481I 481I33012136 Crossed: THOMPSON RD CR10 CheckValue: 1,783,254,139

Overall Condition:

GENERAL RECOMMENDATION: 6

Computed Condition Rating: 5.683

Problems Requiring Action:

NO Further Investigation Needed

NO Flags Issued

POSTINGS:

Inspector Confirmed existing Posting data as correct.
Posted Vertical Clearance ON the bridge is: No Posting
Posted Vertical Clearance UNDER the bridge is: No Posting
No Load Restriction is posted on this bridge

Overloads Observed:

NO Overload Vehicles were observed on this bridge

FEDERAL RATINGS:

NBI Deck Condition: 7
NBI Superstruct Condition: 7
NBI Substruct Condition: 7
NBI Channel Condition: N
NBI Culvert Condition: N

Diving Inspection Needs:

Diving Inspection Required? No Date of Last Diving Inspection: No Date

Inventory Problems:

Inventory Problems Exist? No

Miscellaneous:

Time Required to Inspect Bridge: 5 Hours

Lane Closure Needs: None Required

No Railroad Flagging Required

There is a Pedestrian Fence 12.00 Feet High

No Snow Fence

The BIN Plate is in OK condition

Inspection Date: 6/8/2012 RC: 33 BIN: 1072792

Gen. Rec., Postings, Federal Ratings, etc.

Carried: 481I 481I33012136 Crossed: THOMPSON RD CR10 CheckValue: 1,783,254,139

Special Emphasis Inspection Required:

Non-Redundant/Fracture Critical Members - No
Pin and Hangers - No
Fatigue-Prone Welds - No
Non-Categorized Fatigue-Prone Details - No
Other (Specified in Text) - No

Special Emphasis Details:

No Special Emphasis Inspection Required.

General Notes To the Next Inspector:

BIN Plate located at end leftcorner of backwall.

Single gouge in left fascia girder over beginning lane.

Improvements Observed:

Inspection Date: 6/8/2012 RC: 33 BIN: 1072792

Review Progress and Personnel Present at Inspection

Carried: 481I 481I33012136 Crossed: THOMPSON RD CR10 CheckValue: 1,783,254,139

Inspection Submission Status:

Submitted to QC Engineer on: 6/19/2012
QC Submission Number: 353206

QC Review Completed: 8/7/2012
QC Engineer: James R. Manning

Submitted to Liaison Engineer on: 8/8/2012
Liaison Submission Number: 53214

Liaison Review Completed: 8/9/2012
Liaison Engineer: TODD M. HERMANN

Submitted for BIIS Processing on: 8/9/2012
BIIS Submission Number: .kp1

Current Status: Keypunched, Sent to BIIS
Check Value: 1,783,254,139

Personnel Present During Inspection:

Peter Riehlman - Team Leader
Rebecca Maurer - Assistant Team Leader

Inspection Date: 6/8/2012 RC: 33 BIN: 1072792

Inspection Access Requirements

Carried: 481I 481I33012136 Crossed: THOMPSON RD CR10 CheckValue: 1,783,254,139

Equipment Required for Inspection

Access Requirement Changes WERE Noted During This Inspection.
This Listing is from the Inspection.

ACCESS CATEGORIES FOR ENTIRE BRIDGE
Required: Walking

ACCESS CATEGORIES FOR SPAN 1
Required: Walking

Inspection Date: 6/8/2012 RC: 33 BIN: 1072792

Culvert Measurements

Carried: 481I 481I33012136 Crossed: THOMPSON RD CR10 CheckValue: 1,783,254,139

Culvert Measurements

NO CULVERT DATA FOR BIN 1072792

Standard Photos **RC: 33 BIN: 1072792**

Carried: 481I 481I33012136 Crossed: THOMPSON RD CR10

1072792_LOCATION_MAP.JPG

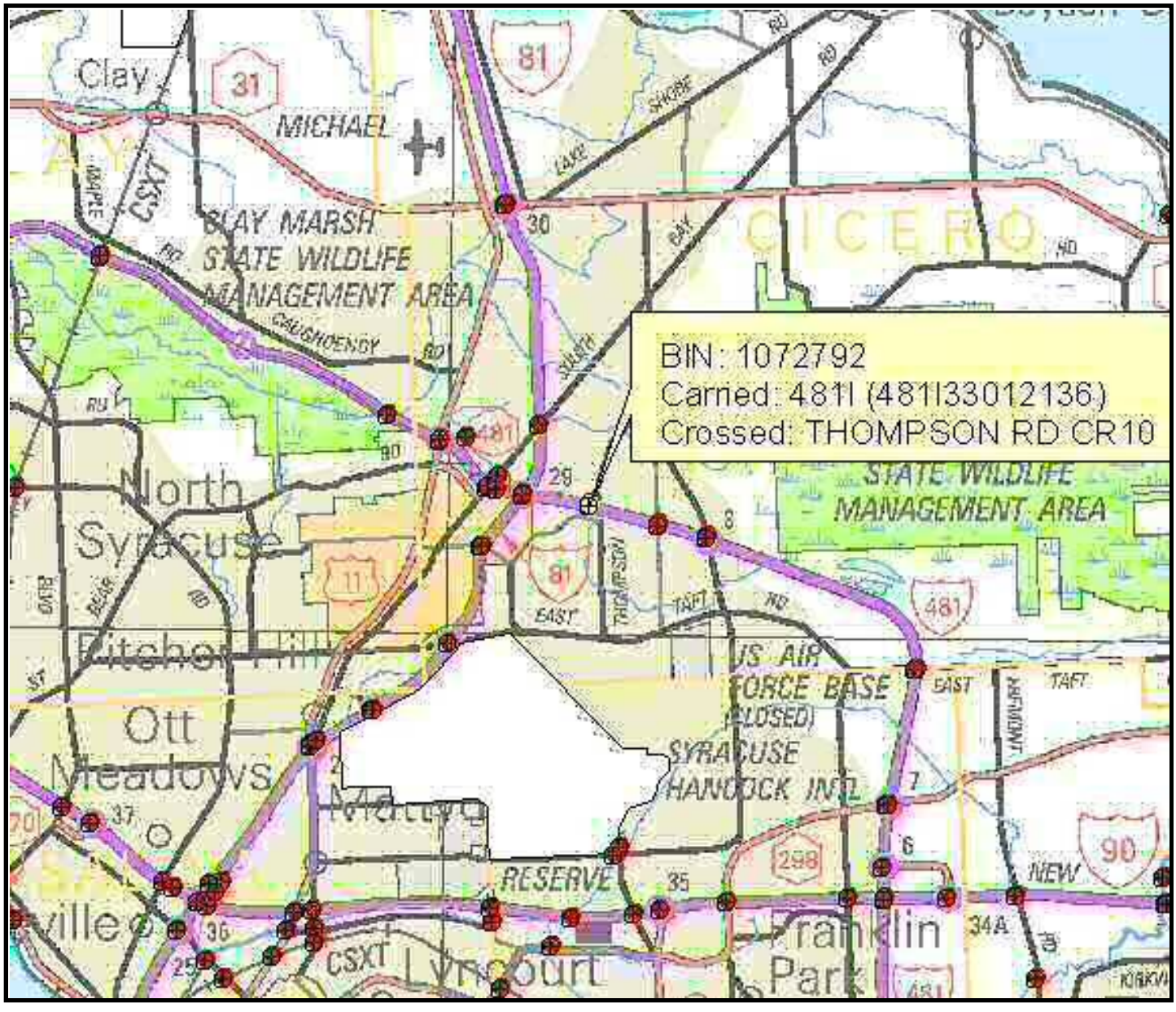

Standard Photos **RC: 33 BIN: 1072792**

Carried: 481I 481I33012136 Crossed: THOMPSON RD CR10

1072792_QUAD_MAP.JPG

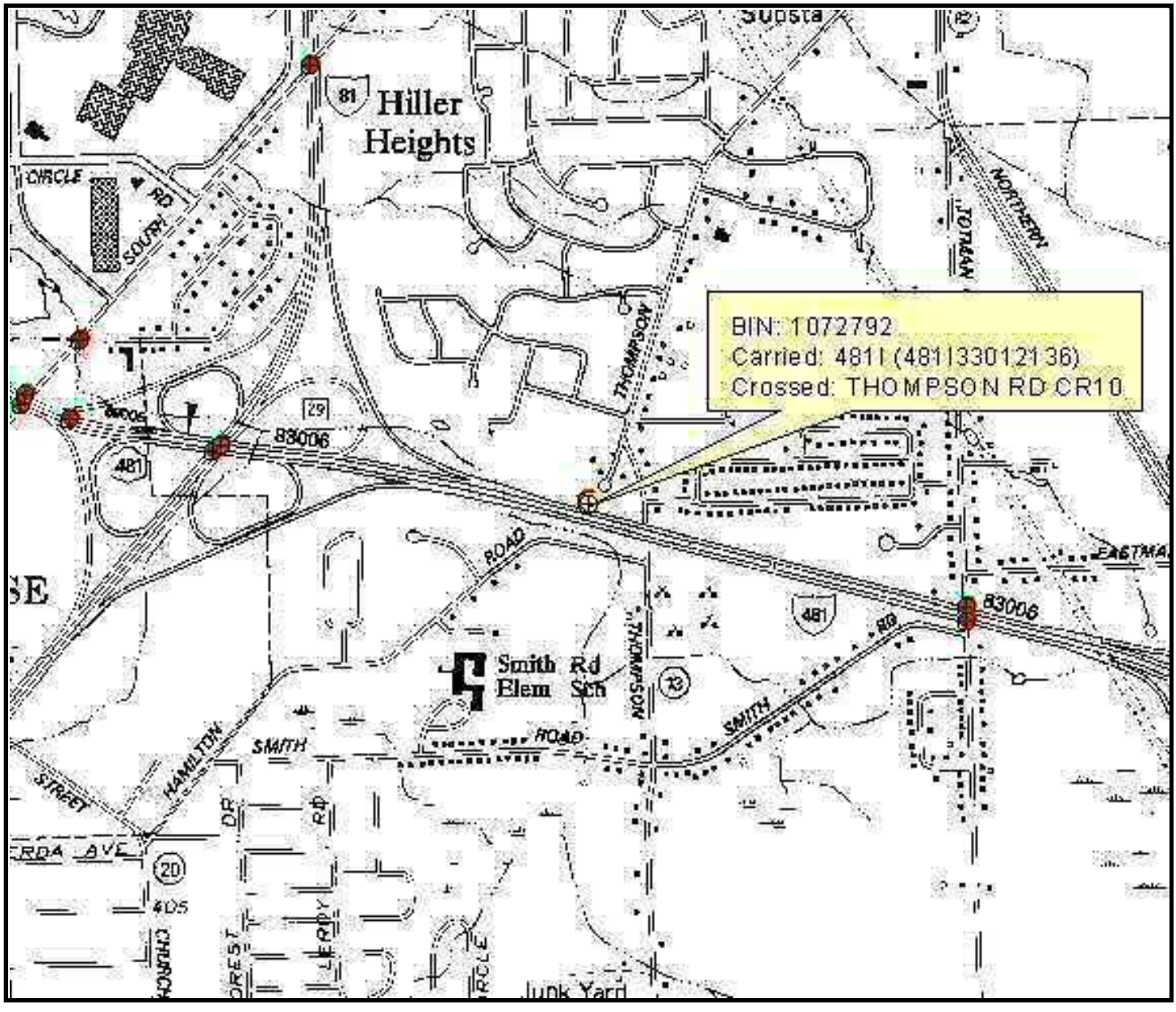

Standard Photos **RC: 33 BIN: 1072792**

Carried: 481I 481I33012136 Crossed: THOMPSON RD CR10

AbutmentBegin.12.jpg



Standard Photos **RC: 33 BIN: 1072792**

Carried: 481I 481I33012136 Crossed: THOMPSON RD CR10

ApproachBegin.12.jpg



Standard Photos **RC: 33 BIN: 1072792**

Carried: 481I 481I33012136 Crossed: THOMPSON RD CR10

ApproachEnd.12.jpg



Standard Photos **RC: 33 BIN: 1072792**

Carried: 481I 481I33012136 Crossed: THOMPSON RD CR10

ElevationSpan1.12.jpg

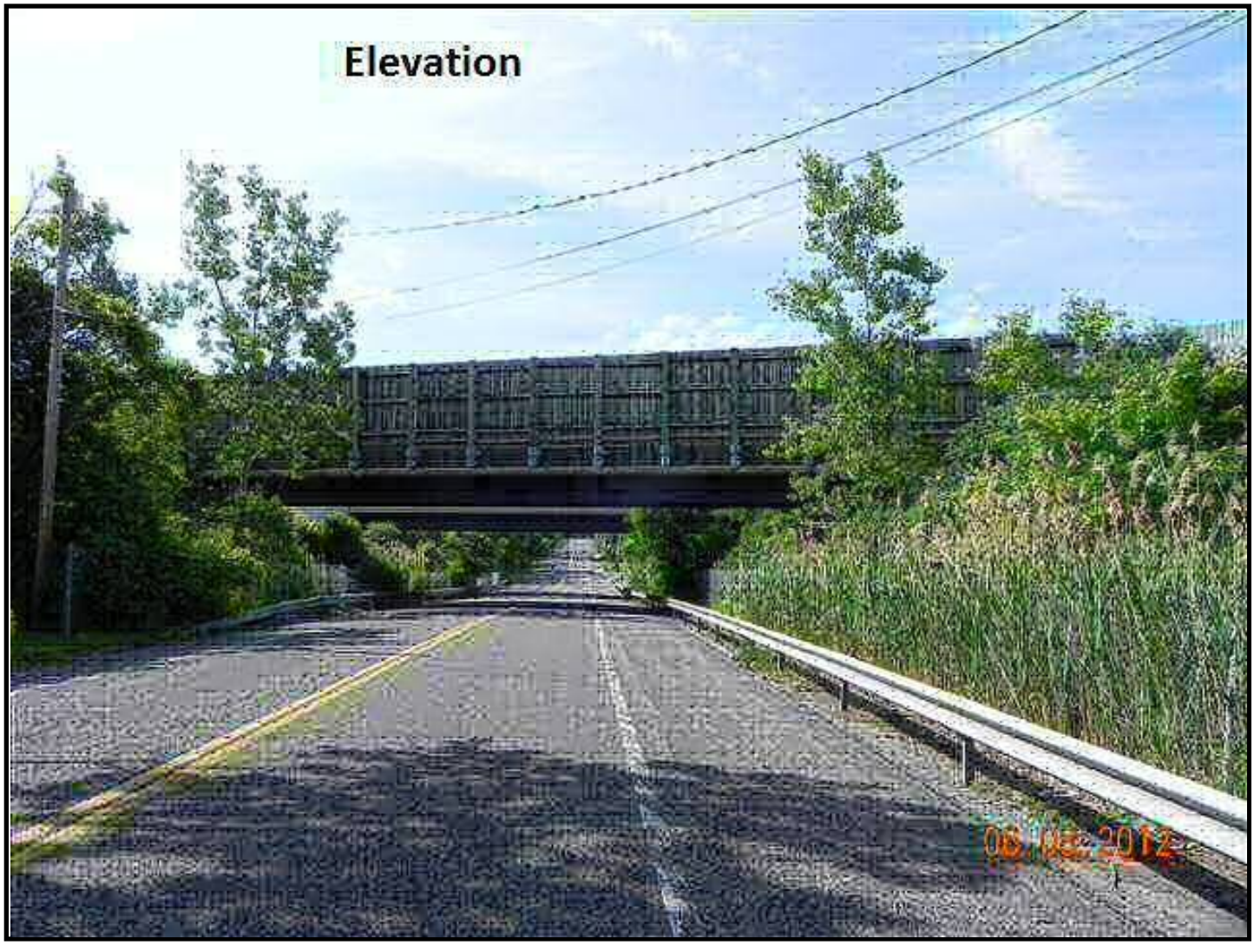

Standard Photos RC: 33 BIN: 1072792

Carried: 481I 481I33012136 Crossed: THOMPSON RD CR10

F2CrossedSpan1Left.12.jpg



Standard Photos **RC: 33 BIN: 1072792**

Carried: 481I 481I33012136 Crossed: THOMPSON RD CR10

FramingSpan1.12.jpg



Standard Photos **RC: 33 BIN: 1072792**

Carried: 481I 481I33012136 Crossed: THOMPSON RD CR10

F2CrossedSpan1Right.12.jpg



LEVEL 1 LOAD RATING SUMMARY SHEET

Region/County Region 3/Onondaga BIN 1072792
Feature(s) Carried and Crossed I-481 Northbound/Thompson Road
Date of field inspection upon which Level 1 rating is based 1/7/2014

OVERALL BRIDGE RATTNGS (BASED ON LOWEST RATED ELEMENTS):

Total number of rating units 1

	H inventory	H operating	HS inventory	HS operating
Rating	H 30.57 (tons)	H 51.06 (tons)	HS 48.83 (tons)	HS 81.55 (tons)
Lowest rated element	Interior Girders G9, G8, and G7	Interior Girders G9, G8, and G7	Interior Girders G9, G8, and G7	Interior Girders G9, G8, and G7

Analysis method LFR Comments

Individual Rating Unit Level 1 values:

Rating unit span(s) 1

Main member ratings

	H inventory	H operating	HS inventory	HS operating
Rating	H (tons)	H (tons)	HS (tons)	HS (tons)
Lowest rated element				

Analysis method Comments

Floorbeam ratings

	H inventory	H operating	HS inventory	HS operating
Rating	H (tons)	H (tons)	HS (tons)	HS (tons)
Lowest rated element				

Analysis method Comments

Stringer ratings

	H inventory	H operating	HS inventory	HS operating
Rating	H 30.57 (tons)	H 51.06 (tons)	HS 48.83 (tons)	HS 81.55 (tons)
Lowest rated element	Interior Girders G9, G8, and G7	Interior Girders G9, G8, and G7	Interior Girders G9, G8, and G7	Interior Girders G9, G8, and G7

Analysis method LFR Comments

Certified by Date

Quality Control Engineer Signature Date
Agency or Company represented by certifier

Note:
-If connection ratings govern, record them under stringer ratings for stringer – floorbeam connection, floorbeam ratings for floorbeam-main member connections, etc.
-When Level 1 results indicated the need for load posting or other corrective action, the NYSDOT Regional Structures Engineer shall be notified immediately.
-Load ratings should be filed in the regional office within 60 days of completion of calculations.
-Bridges shall be flagged based on Level I results in accordance with the current NYSDOT flagging procedure.
-Bridge load posting, closure, etc. determinations shall be made as results are being produced.

PARSONS

100 Broadway
New York, NY 10005
Phone: 212-266-8300
Fax: 212-571-6825
www.parsons.com

TECHNICAL MEMORANDUM

FROM: Kian Siang Chau, P.E
NYSPE 082744

DATE: MARCH 19, 2014

RE: SEISMIC SCREENING SUMMARY
NEW YORK STATE DEPARTMENT OF TRANSPORTATION
D031085; PIN 3501.60; I-81

BIN: 1072792 (I-481 NB/Thompson Rd)

This memorandum summarizes the seismic screening conducted for BIN 1072792 as part of the Interstate 81 Project in Syracuse, NY. The purpose of the screening is to determine if seismic retrofits are warranted at the superstructure to substructure connection, and if further seismic evaluation of the structure is required. This memorandum will give the screening results, retrofits required and recommendations for further seismic evaluation of the structure.

SCREENING PROCEDURE

The seismic screening was performed in accordance with the FHWA Seismic Retrofitting Manual for Highway Structures: Part 1 - Bridges, January 2006. As per the referenced manual, seismic screenings were performed for both lower level and upper level earthquake ground motion. The lower level earthquake ground motion has a reasonable likelihood of occurrence within the life of the bridge (50% probability of exceedance within a 75 year bridge life). The upper level earthquake ground motion has a finite likelihood of occurrence within the life of the bridge (7% probability of exceedance within a 75 year bridge life).

Values for the spectral acceleration for the Syracuse area used in the screening are as follows:

- Lower Level Earthquake Ground Motion for a Short Period (0.2 seconds): $S_S = 0.0251$
- Lower Level Earthquake Ground Motion for a Long Period (1.0 seconds): $S_1 = 0.0076$
- Upper Level Earthquake Ground Motion for a Short Period (0.2 seconds): $S_S = 0.139$
- Upper Level Earthquake Ground Motion for a Long Period (1.0 seconds): $S_1 = 0.047$

These values are considered constant and are the same for all seismic screenings of bridges in the Syracuse area.

The Site Class is based on the soil conditions at the bridge location. It was determined that this parameter has little effect on the results of the seismic screening because the spectral acceleration values for the Syracuse area are small. Based on this, a site class of D was used for all seismic screenings of bridges in the Syracuse area.

Bridge parameters used in the seismic screening were retrieved from the record drawings and WinBolts data.

The seismic screening takes into account the anticipated service life, importance, and the seismic exposure of the bridge to determine a seismic retrofit category (SRC). The SRC is then used to determine seismic evaluation methods and retrofit measures. There are four SRCs, A through D. Seismic retrofit category A is the lowest category; bridges in this category do not require retrofits or further seismic evaluation. Seismic retrofit category D is the highest category; bridges in this category requiring the most rigorous seismic evaluations and retrofits.

SCREENING RESULTS

The SRC for the bridge is "**C**" for lower level earthquake ground motion and "**B**" for upper level earthquake ground motion.

RETROFITS REQUIRED

No seismic retrofits are required for the bridge superstructure to substructure connection.

RECOMMENDATIONS FOR FURTHER SEISMIC EVALUATION

No further seismic evaluation is required for lower level earthquake ground motion. For the upper level earthquake ground motion, it is recommended that the capacities of the bearings are checked as per Section 5.2 of the referenced manual.

Retrofit cost estimates will be provided after any further required seismic evaluations are completed.

BRIDGE DECK EVALUATION REPORT

RECOMMENDATIONS

The bridge deck inspection findings and evaluation are used as a tool for developing the scope of work and cost estimates for the development and comparison of alternatives for the overall project.

The total damaged area of the deck is 1.6% of the total deck surface area. The cores indicate the reinforcement steel is 2.25 inches to 2.75 inches below the surface of the deck. The lab test indicates that chloride ion concentrations at all of the sample locations are significantly higher than the corrosion threshold for steel.

Due to the age, condition and high chloride ion content of the bridge deck concrete, the bridge deck should be rehabilitated or replaced to meet the current standards and to mitigate excessive future maintenance costs.

ALTERNATIVES

- Rehabilitation Alternative - 2 inches Bonded Concrete Overlay
  - Scope

    The scope of this alternative will include the complete removal of the bridge parapets and fascias to the level of the original top of the deck. The joint will be removed. The top 2 inches of the entire deck will be removed and areas of deteriorated concrete must be removed to at least 1 inch below the level of the reinforcement steel and to the horizontal and vertical limit of any detectable hollow areas. Additionally, any further areas of deteriorated concrete detected will require full depth removal. Any corrosion of the reinforcement steel will be removed by sandblasting or hydro-blasting. The proposed deck overlay will be a 3 inches thick bonded concrete overlay yielding a nominal 9.5 inches standard thickness deck. A new single-sloped concrete barrier and a new armorless joint will be installed. The Level 1 Load Rating for the final condition was found to be acceptable.

- Useful Life Expectancy

  The removal of the top 2 inches of the existing deck will remove a portion of the deck with high chloride ion concentrations. It can be anticipated that chloride ions will continue to migrate into the remaining deck to the reinforcing steel resulting in further corrosion-related deterioration of the deck surface. Concrete admixtures will be included in the bonded concrete overlay to impede the continued penetration of chloride into the deck from the surface. This alternative will result in an extended useful life expectancy estimated at 20 years.

The design life of the project is 30 years (ETC + 30). This alternative does not meet the project objectives of obtaining 30 years of service life and is not evaluated further.

- Rehabilitation Alternative – 100% Deep Removal and Partial Deck Reconstruction
  - Scope

    The scope of this alternative will include the complete removal of the bridge parapets and fascias to the level of the original top of the deck. The joint will be removed. The scope of this alternative will include partial depth reconstruction with removal of the concrete to at least 1 inch below the top mat of the reinforcement steel. Additionally, any further areas of deteriorated concrete detected will require full depth removal. Any corrosion of the reinforcement steel will be removed by sandblasting or hydro-blasting. Due to the condition of the deck, full depth removal is not likely and not included in the cost estimate. The proposed deck partial reconstruction will be a nominal 5.75 inches thick concrete deck yielding a 9.5 inches standard thickness deck. A new single-sloped concrete barrier and a new armorless joint will be installed. The Level 1 Load Rating for the final condition was found to be acceptable.
  - Useful Life Expectancy

    This alternative will provide a useful life expectancy is estimated at 35 years.
  - Cost Estimate

    The estimated cost for this alternative is $393,000. The Engineer's Opinion of Probable Construction Cost worksheet is at the end of this section.

- Replacement Alternative – Cast-In-Place Concrete
  - Scope

    This scope of this alternative will include the complete demolition of the existing bridge deck, parapits, fascias and bridge joint. The bridge deck will be replaced with a new 9.5 inches standard thickness concrete deck. A new single-sloped concrete barrier and a new armorless joint will be installed. The Level 1 Load Rating for the final condition was found to be acceptable.
  - Useful Life Expectancy

    This alternative will provide a useful life expectancy is estimated at 40+ years.
  - Cost Estimate

    The estimated cost for this alternative is $527,000. The Engineer's Opinion of Probable Construction Cost worksheet is at the end of this section.

- Replacement Alternative – Pre-cast Concrete Deck Panels
  - Scope

    The scope of this alternative is similar to the Cast-In-Place Concrete Deck Replacement Alternative except the deck structure will be precast panels. This alternative offers reduced construction time over conventional construction.
  - Useful Life Expectancy

    This alternative will provide a useful life expectancy is estimated at 40+ years.
  - Cost Estimate

    The comparison of accelerated construction to conventional construction is beyond the current scope of this evaluation.

IN-DEPTH INSPECTION REPORT

D031085 P.I.N. 3501.60

ELEMENT SPECIFIC BRIDGE WORK

B.I.N. 3/3 1093510

TEAM LEADER George H Stam, P.E. 056216
NYSPE LICENSE #

ASSISTANT TEAM LEADER Timothy Olmstead

FEATURE CARRIED I-690 Eastbound Ramp (Future)

FEATURE CROSSED I-481 Southbound

DATE FIELD WORK BEGAN 1/14/14

DATE FIELD WORK COMPLETED 1/23/14

TABLE OF CONTENTS

- STRUCTURE IDENTIFICATION
- INTRODUCTION
- PROJECT LOCATION MAP
- IN DEPTH CONDITION DOCUMENTATION
- PLANS & SKETCHES
- IN DEPTH PHOTO DOCUMENTATION
- ASBESTOS SAMPLING SURVEY
- LATEST BIENNIAL INSPECTION REPORT

STRUCTURE IDENTIFICATION

a. Bridge Identification Number (BIN): 3/3 1093510
b. Reference Marker: 690I 3301 3016
c. Region: NYSDOT Region 3
d. County: Onondaga
e. Town: Dewitt
f. Feature Carried: I-690 Eastbound Ramp (Future)
g. Feature Crossed: I-481 Southbound
h. Orientation: Southeast

INTRODUCTION

a. Bridge History
   i. Year Built: 1972
   ii. Bridge Type: Single Span, Steel Multi-girder
   iii. Span Length: 123 feet
   iv. Out-to-Out Width: 42 feet
   v. Structural Ratings and Rankings
      1. Federal Sufficiency: 98 (Apr. 2011)
      2. Condition Rating: 5.359 (Apr. 2013)
      3. General Recommendation: 6 (Apr. 2013)
   vi. Live Load Posting (HS25): No
   vii. National Highway System (NHS): Yes
   viii. Previous work Done:

1987 – Replace wearing surface (asphalt concrete overlay) with concrete overlay
1998 – Clean and paint metal surfaces
2001 – Asbestos testing.
2003 – Asbestos testing.
2004 – Replace begin joint seal; remove end armor angle; Misc.repair of concrete at abutments.

   ix. Planned Future Work: N/A

b. Highway Classification

i. Functional Classification: Urban Principle Arterial - Interstate

ii. Traffic Volumes

Note: This bridge is not open to general public traffic.

YEAR	AADT
2014	NA
2034	NA
2054	NA

iii. Plan for Maintenance and Protection of Traffic:
Maintenance and protection of traffic will be achieved by staged construction.

PROJECT LOCATION MAP

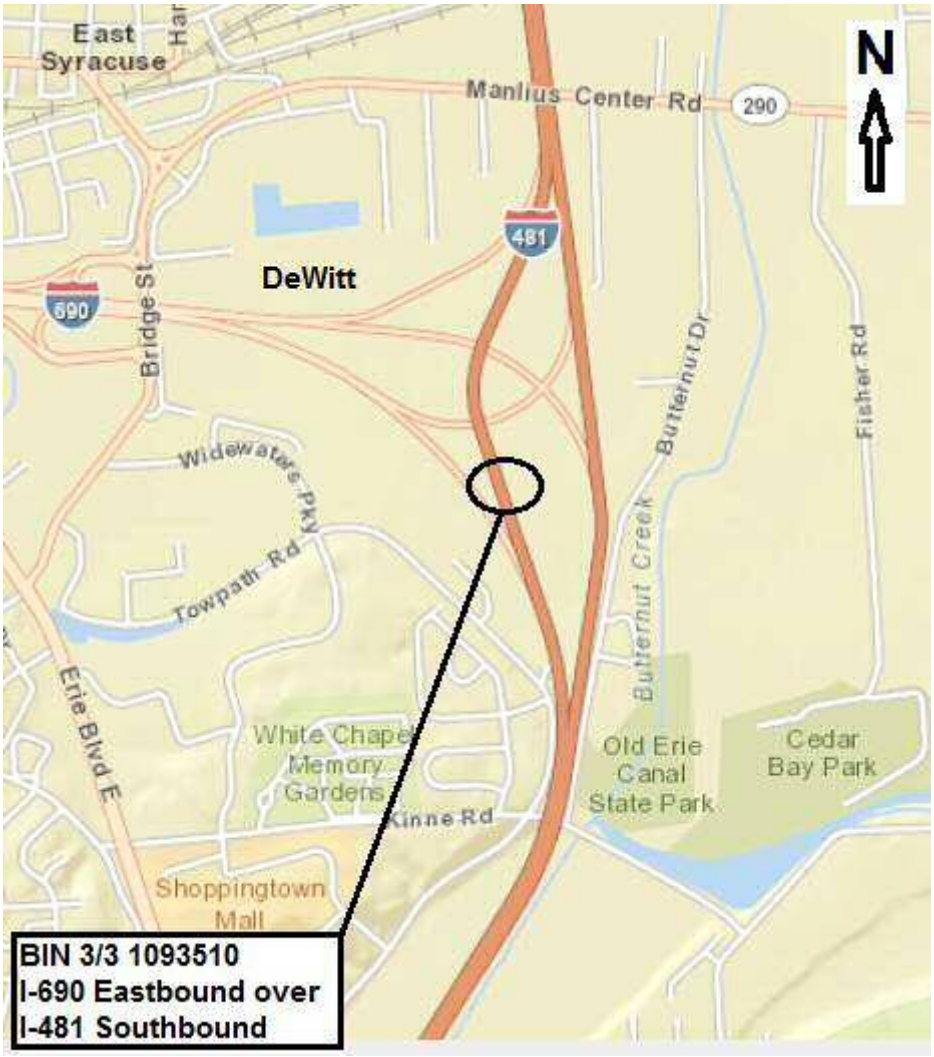

IN-DEPTH CONDITION DOCUMENTATION

NYS DEPT. OF TRANSPORTATION **SHEET: 1 OF 4**
BRIDGE INSPECTION REPORT **BIN: 1093510** **DATE: 1/14/2014 & 1/23/2014**

FEATURE CARRIED: I-690 EB Ramp (Future) **TEAM LEADER: G. STAM**
FEATURE CROSSED: I-481 SB **ASSIST. TEAM LEADER: T. OLMSTEAD**

ITEM	REMARKS	PHOTO NO.
	BEGIN ABUTMENT ITEMS	
TP 349-22	Begin Abutment - Joint with Deck:	
	Begin - The begin bearings are expansion. The begin joint is steel armor angle with a compression seal. From above, the compression seal is in good condition (Photo 1). The steel armor angles are rusted with some delamination of the steel angles evident. The armor angle at the leading edge of the header has scrapes from plow impacts but no major deformations. The concrete between the leading angle and the joint armor angle is deteriorated and spalled 1 inch deep and the top leg of the leading angle is undermined in the right and left lanes (Photo 2).	1,2
TP 349-24	Begin Abutment – Bearings:	3,4,5
	The begin bearing are expansion. The left fascia bearing is rusted and extended at -1 ºF indicating it may not be functioning properly (Photos 3 & 4). The interior bearings are in better condition and are in their normally contracted position at -1 ºF (Photo 5).	
TP 349-26	Begin Abutment - Seat and Pedestals:	
	Seat - The seat has several cracks and a hollow area as Illustrated on the Begin Abutment Deterioration Sketch. Significant areas are noted below:	
	• Bay1 is cracked along the left side about 4 inches in from the front face (Photo 6);	6
	• Bay 2 has a full length crack at the middle of the bay (Photo 7).	7
	• Bay 2 has a 3 square foot hollow area at the right front face (Photo 8).	8
	Pedestals - The pedestals are in good condition with no significant cracks or hollow areas detected.	
TP 349-28	Begin Abutment – Backwall:	9,10
	There is tight mapcracking of approximately 50% of surface of the backwall, particularly at the left side (Photo 9). There is a 1 foot wide x 6 inches high x up to 6 inches deep spall at the top left backwall. At the right side of bay 2, there is a full height vertical crack (Photo 10). See the Begin Abutment Deterioration Sketch.	
TP 349-30	Begin Abutment – Stem:	11,12
	The stem has scattered cracks as illustrated on the Begin Abutment Deterioration Sketch. There is a horizontal crack one foot below the top at the left side of bay 1 (Photo 11). There is a full height vertical crack at the middle of bay 2 (Photo 12).	
	END ABUTMENT ITEMS	
TP 349-23	End Abutment - Joint with Deck:	13
	The end bearings are fixed. The steel armor was removed in 2004. There is no joint visible from the top (Photo 13).	
TP 349-25	End Abutment – Bearings:	14,15
	The end bearings are fixed. The left fascia bearing is rusted (Photo 14). The interior bearings are in better condition. The left anchor bolt at bearing B5 is sheared off (Photo 15).	

ITEM	REMARKS	PHOTO NO.
TP 349-27	End Abutment - Seats and Pedestals: Seat - The seat has tight mapcracking with efflorescence over 30% of the surface in pedestal bays 2 and 4. The front edge of the seat is cracked 3 feet long with staining in pedestal bay 3 (Photo 16). The remainder is in good condition with no hollow areas or significant cracks detected.	16
	Pedestals - The sides of pedestal P1 are mapcracked (Photos 17 & 18). The front face of pedestal P5 is light mapcracked over 20% of the surface. See the End Abutment Deterioration Sketch. The remaining pedestals are in good condition with no significant cracks or hollow areas detected.	17,18
TP 349-29	End Abutment – Backwall: The backwall is tight hairline cracked throughout. There is leakage down the end left backwall resulting in cracking with efflorescence; and spalling of the backwall (Photo 19). At the top, there is a 1 foot wide x 2 feet high x up to 3 inches deep spall; and there is a full height crack at the left side with efflorescence and spalling along the crack. Above pedestal P1, there is a 0.5 foot high x 1 foot wide surface spall (Photo 17); and at the right side of Pedestal 1, there is a 1 foot high x 1 foot wide x 1 inch deep spall (Photo 20). See the End Abutment Deterioration Sketch.	17,19,20
TP 349-31	End Abutment – Stem: The stem is tight hairline cracked over approximately 80% of the surface (Photo 21). The left 1/3 is the worst area with more pronounced cracks, surface scaling, staining and efflorescence (Photos 22 & 23). There are more prounced cracks scattered throughout. See the End Abutment Deterioration Sketch.	21,22,23
	APPROACH ITEMS	
TP 349-53	Approach - Drainage: The end left approach pavement at the curbline is slightly higher than the top of deck trapping runoff and causing shallow ponding along the curbline of the deck at that location (Photo 24).	24
TP 349-55	Approach - Settlement: There is 0.5 inch of settlement at the begin approach (Photo 1). At the end approach, there is no significant settlement (Photo 13).	1,13
TP 349-57	Approach - Pavement: At the end approach, the asphalt pavement adjacent to the bridge is transverse cracked and raveled with a gap up to 3 inches wide and 1.5 inches deep (Photo 13). The gap at the end pavement joint allows runoff to seep into the pavement and abutment backfill. There is leakage evident down the end left backwall resulting in cracking and spalling of the backwall (Photo 19).	13,19
	DECK ITEMS	
TP 350-19	Deck - Wearing Surface: The ride quality of the deck is smooth.	

ITEM	REMARKS	PHOTO NO.
TP 350-20	Deck - Curbs: The curbs are granite in good condition. The average curb reveal is 8.5 inches.	
TP 350-21	Deck - Sidewalks and Fascias: Sidewalks – The safety walks have tight map cracking on less than 5% of the top surface (Photo 25). No hollow sounding areas or spalls were detected.	25
	Fascias – Left - The upper (safety walk) portion of the left fascia are tight mapcracked over approximately 5% of the surface concentrated below the railing posts (Photo 26). The lower fascia portion has scattered vertical hairline cracks (Photo 27).	26,27
	Right - The right fascia is generally in good condition. At the end, there is a vertical crack with efflorescence through the lower portion that wraps under the fascia into the deck fascia bay (Photo 28).	28
TP 350-22	Deck - Railings: The railings are in good condition with only oxidation of the galvanized surfaces. There are no snow fences.	
	SUPERSTRUCTURE ITEMS	
TP 350-27	Structural Deck: Record plans indicate the initial structural deck is 8 inches thick concrete mono-deck. SIP forms were not used. Records indicate the deck was repaired, the surface was scarified and it received a 1.75 inch concrete overlay in 1987.	
	Top of Deck - There is scattered random cracking with hollow areas throughout (Photos 29, 30, & 31) as illustrated in the Top of Deck Deterioration Sketch. The total hollow area is 2.2% of the surface.	29,30,31
	Underdeck – There is widespread hairline cracking of the underside of the deck throughout (Photo 32). There are scattered more pronounced cracks, some with efflorescence. There are delaminated, hollow sounding, and damp areas; and spalls, some with exposed rusted reinforcing bars. The deteriorated areas are illustrated on the Under Deck Deterioration Sketch. The total damaged area of the underside of the deck is 1.3% of the area. The more significant areas are noted below:	32
	○ Bay 2 in diaphragm bay 3 – 6 square foot area of hollow sounding concrete.	
	○ Bay 2 near the end of diaphragm bay 4 – 20 square foot area of hollow sounding delaminated concrete and a 4 feet wide x 6 inches long x 1.5 inches deep spall with 2 exposed reinforcement bars (Photo 33).	33
	○ Bay 2 in diaphragm bay 5 – 22 square foot area of cracking and hollow sounding concrete (Photo 34).	34
	○ Bay 3 near diaphragm 5 – 12 square foot area of hollow sounding concrete and a spalled area along the begin edge (Photo 35).	35
	○ Bay 3 near the end right – 15 square foot area of surface scaling with light efflorescence (Photo 36).	36
	○ Right fascia bay at the end right – crack with efflorescence (Photo 28).	28

ITEM	REMARKS	PHOTO NO.
TP 350-28	Primary Members: There is localized corrosion at the end left side of girder G1 (Photo 37). Web section loss is estimated at less than 5% in a narrow 2 inches high x 6 inches long band ahead of the bearing stiffener. The remainder of the primary members are in good condition with surface rusting where the paint has peeled or blistered. There is no other significant section loss noted.	37
TP 350-29	Secondary Members: Good condition; surface rusting where the paint has peeled or blistered. There is no significant section loss noted.	
TP 350-30	Paint: The paint system is failed on 10% of the surfaces of the girders and diaphragms. There is cracking and peeling of the paint on the bottom flanges and scattered locations on the girder webs (Photo 38). The outside and inside surfaces of the left fascia girder (Photos 39 & 40) and the inside surface of the right fascia girder (Photo 41) are the worst with blistering and peeling paint over 10% of the surfaces of the webs and 20% of the bottom flanges. There is surface rusting where the paint has peeled or blistered.	38,39,40 41
	UTILITIES ITEMS	
TP 350-43	Lighting: None.	
TP 350-44	Sign Structure: None.	
TP 350-45	Utilities and Support: None.	
	SPECIAL EMPHASIS ITEMS Special Emphasis Inspection Required · Non-Redundant/Fracture Critical Members – No · Pin and Hangers – No · Fatigue-Prone Welds – Yes · Non-Categorized Fatigue-Prone Details – No · Other – No Special Emphasis Details · Diaphragm gusset plate welded connections to bottom flanges of all girders.	

PLANS & SKETCHES

1909.86/5730 BIN 1093510

F.I.S.H. 70-7

FED. RD. REG. NO.	STATE	FEDERAL PROJECT NO.	SHEET NO.	TOTAL SHEETS
1	NEW YORK	I-PRL-2(108)	132	209

INTERSTATE ROUTE CONNECTION 570
BUTTERNUT INTERCHANGE (PHASE 2)

ONONDAGA COUNTY

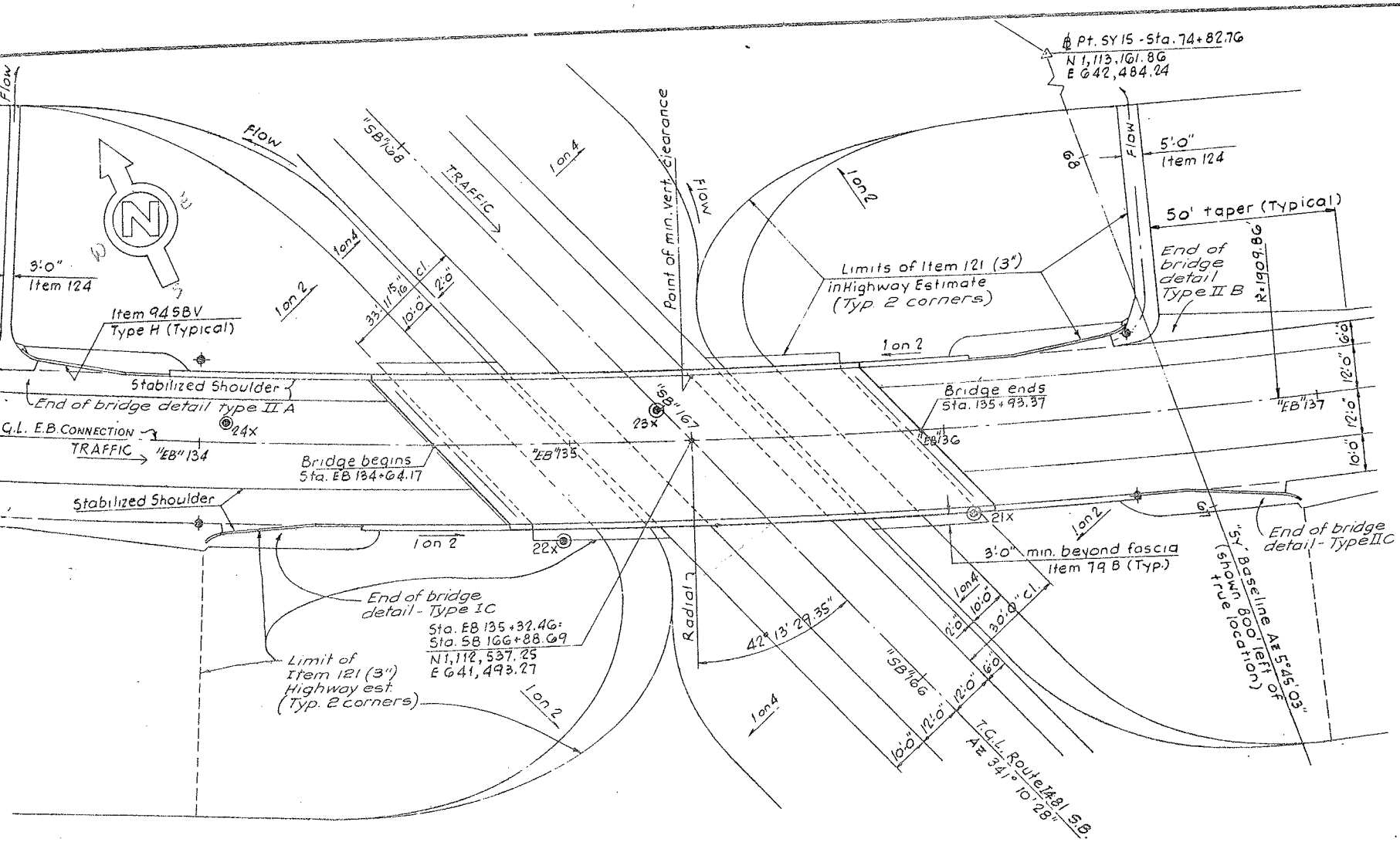

PLAN
Scale 1" = 20'

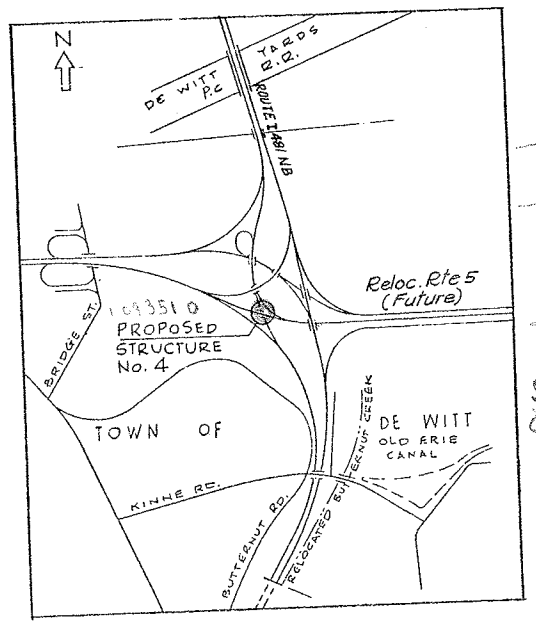

LOCATION PLAN
Scale 1" = 24,000

ESTIMATE OF QUANTITIES

ITEM	DESCRIPTION	UNIT	QUANTITIES NEAT	QUANTITIES PROP'L
1WPS	Watering Plants and Sod	M Gal.	1.5	4.0
2UF	Underdrain Filter	C.Y.	16	20
5B	Structure Excavation	C.Y.	2218	2220
11H·G	Perf. Corr. Metal Pipe Underdr. 6"dia.-8"dia.	L.F.	274	275
18	Class A - Concrete for Structures	C.Y.	17	20
18MA	Cl A-Conc. for Struct. (Mono. Br. Slab)	S.F.	5394	5395
20	Class B-Concrete for Structures	C.Y.	826	830
24A	Bagged Screened Aggregate	C.Y.	137	140
28	Bar Reinforcement for Structure	Lb.	84571	84575
28B	Stud Shear Connectors	Ea.	1348	1350
29	Structural Steel	Lb.	228005	228005
375(2)	Steel Bridge Railing (2 Rail)	L.F.	428	430
G1	Bituminous Material	Gal.	193	195
79B	Concrete Block Paving	S.Y.	371	375
83TXS	Temporary Sheet Piling	S.F.	6927	6930
945BV	Stone Curb (Bridge Types - Granite)	L.F.	590	590
124	Sodding	S.Y.	76	80
363 I V	Epoxy Protective Coating for Conc.	S.F.	2363	2365

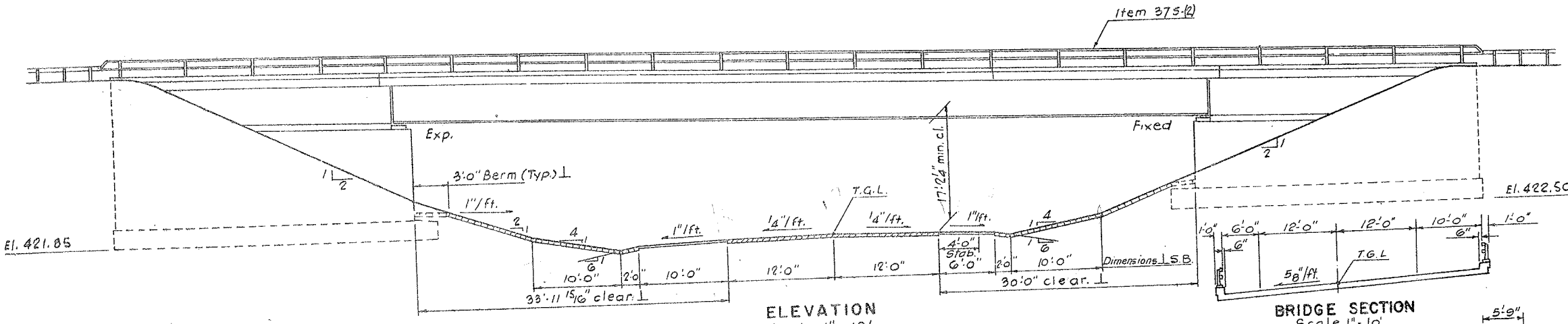

ELEVATION
Scale 1" = 10'

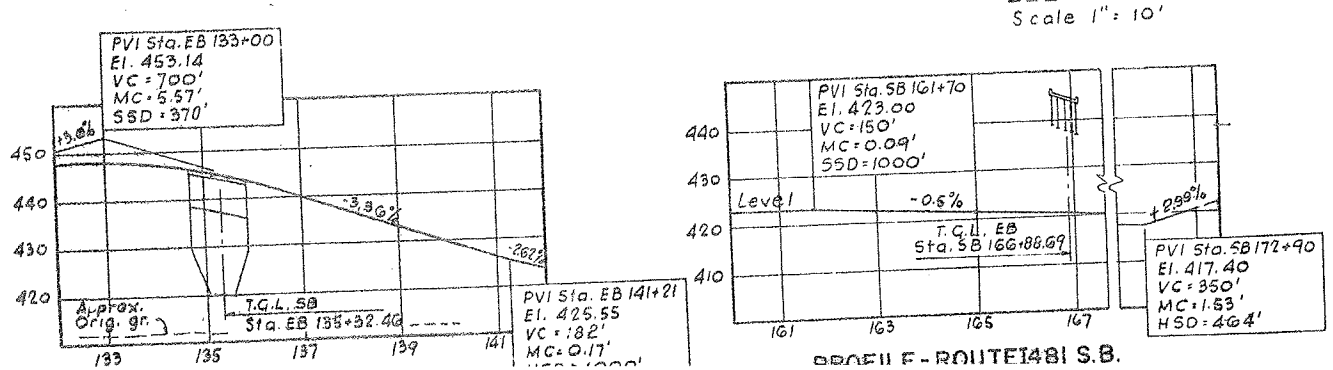

PROFILE - ROUTE 1481 S.B.

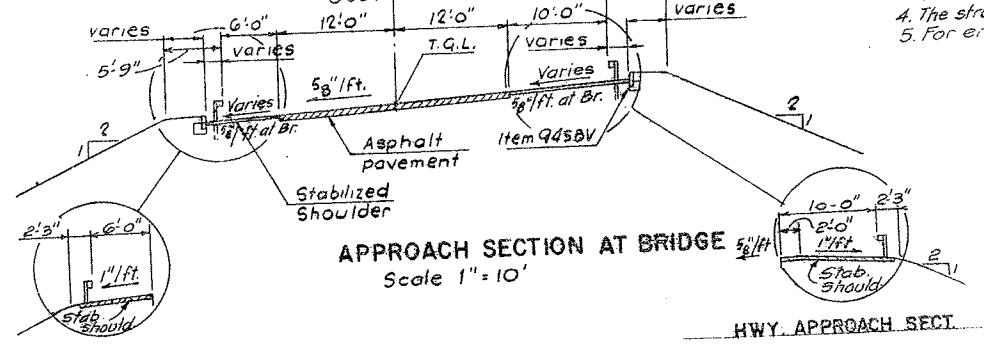

APPROACH SECTION AT BRIDGE
Scale 1" = 10'

HWY. APPROACH SECT.

BRIDGE SECTION
Scale 1" = 10'

◈ Indicates the location of existing settlement Platforms.
Sta. EB 134+00 ± 22' Right ±
Sta. EB 134+00 ± 22' Left ±
Sta. EB 136+50 ± 22' Right ±
Sta. EB 136+50 ± 22' Left ±
℄ Indicates the location of Borings.

NOTES:
1. For General Notes see Sheet No. 124
2. For design purposes the foundation pressure does not exceed 2 1/2 tons/s.f.
Three (3) months waiting period required after completion of backfilling behind abutments and prior to setting final pedestal elevations. Duration of required waiting period may be reduced by the Deputy Chief Engineer (Design) based upon analysis of settlement platform readings. Readings at one (1) week intervals to be taken at the settlement platforms in the vicinity of the abutments will be required after the completion of backfill operation.
3. For curve data see Alignment Plan, Sheet No. 40
4. The structural slab on this structure shall be formed with removable forms.
5. For end of bridge details see sheet No. 127

1 093510
BUTTERNUT INTERCHANGE
F.A.I. 690 & F.A.I. 481
BRIDGE No. 4
E.B. CONNECTION over ROUTE 1481 S.B.
GENERAL PLAN

DESIGNATION	SCALE	DATE	SHEET
7504-02	As shown	8/15/70	132

LOCKWOOD, KESSLER & BARTLETT, INC.
CONSULTING ENGINEERS — SYOSSET, NEW YORK

F.I.S.H. 70-7

FED. RD. REG. NO.	STATE	FEDERAL AID PROJECT NO.	SHEET NO.	T
1	NEW YORK	I-690-8(20) I-481-7(10)	133	

INTERSTATE ROUTE CONNECTION 570
BUTTERNUT INTERCHANGE (PHASE 2)

ONONDAGA COUNTY

DETAIL AT FASCIA PEDESTALS

Scale $\frac{3}{8}$"=1'-0"

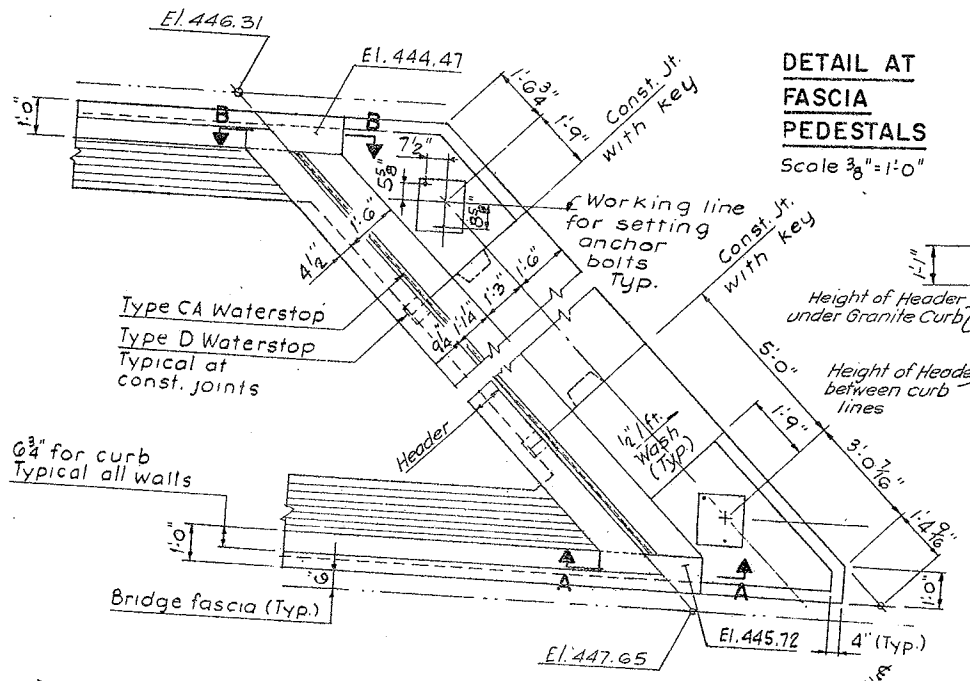

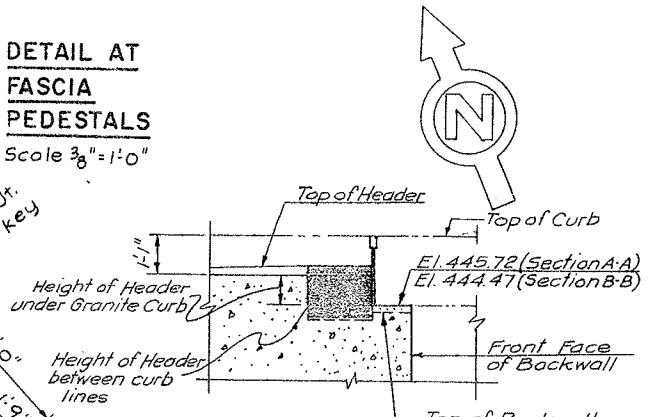

SECTION A-A (shown)
SECTION B-B (opposite hand)
Scale $\frac{3}{8}$"=1'-0"

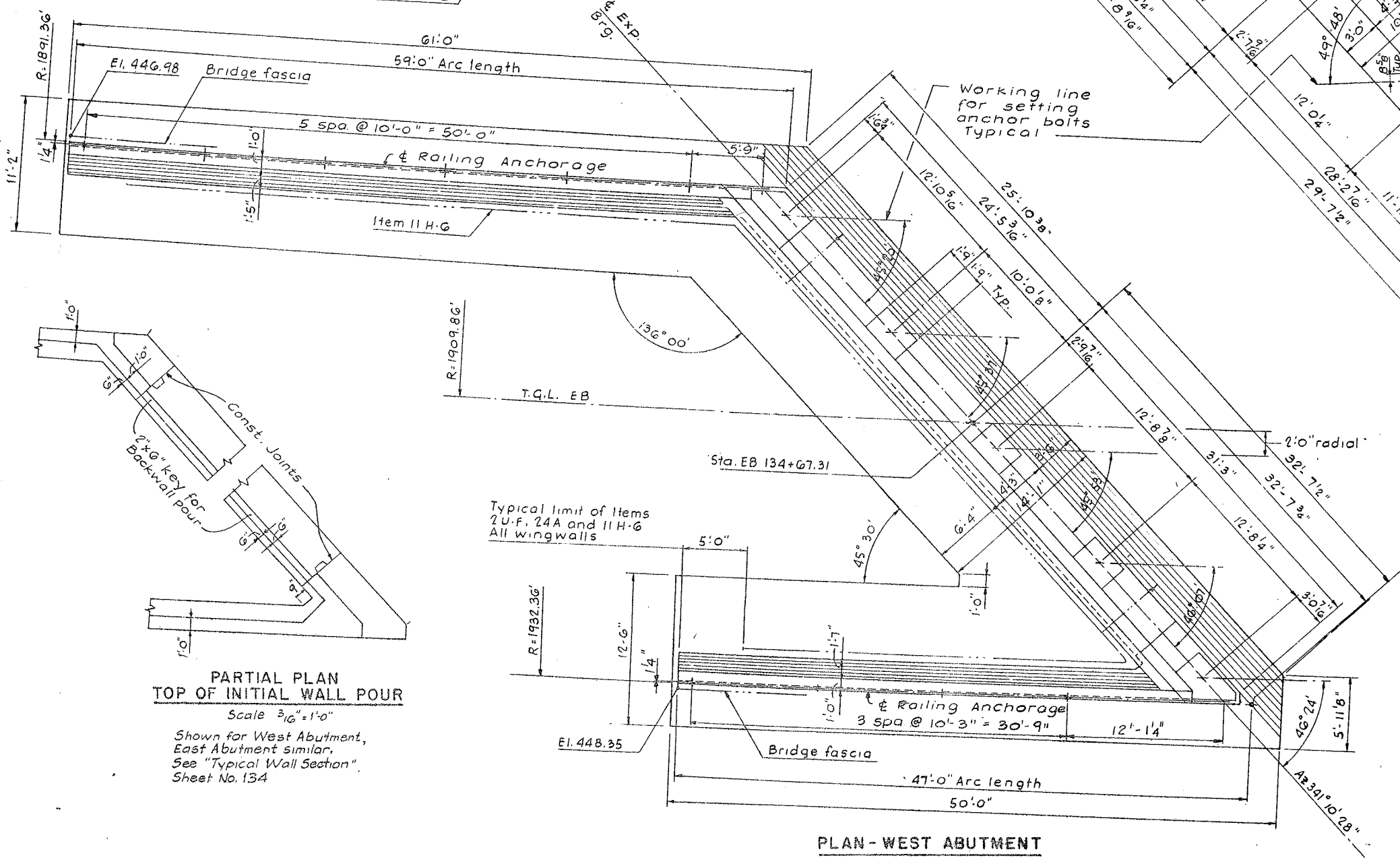

PLAN - WEST ABUTMENT

Scale $\frac{3}{16}$"=1'-0"

PARTIAL PLAN TOP OF INITIAL WALL POUR

Scale $\frac{3}{16}$"=1'-0"

Shown for West Abutment, East Abutment similar. See "Typical Wall Section". Sheet No. 134

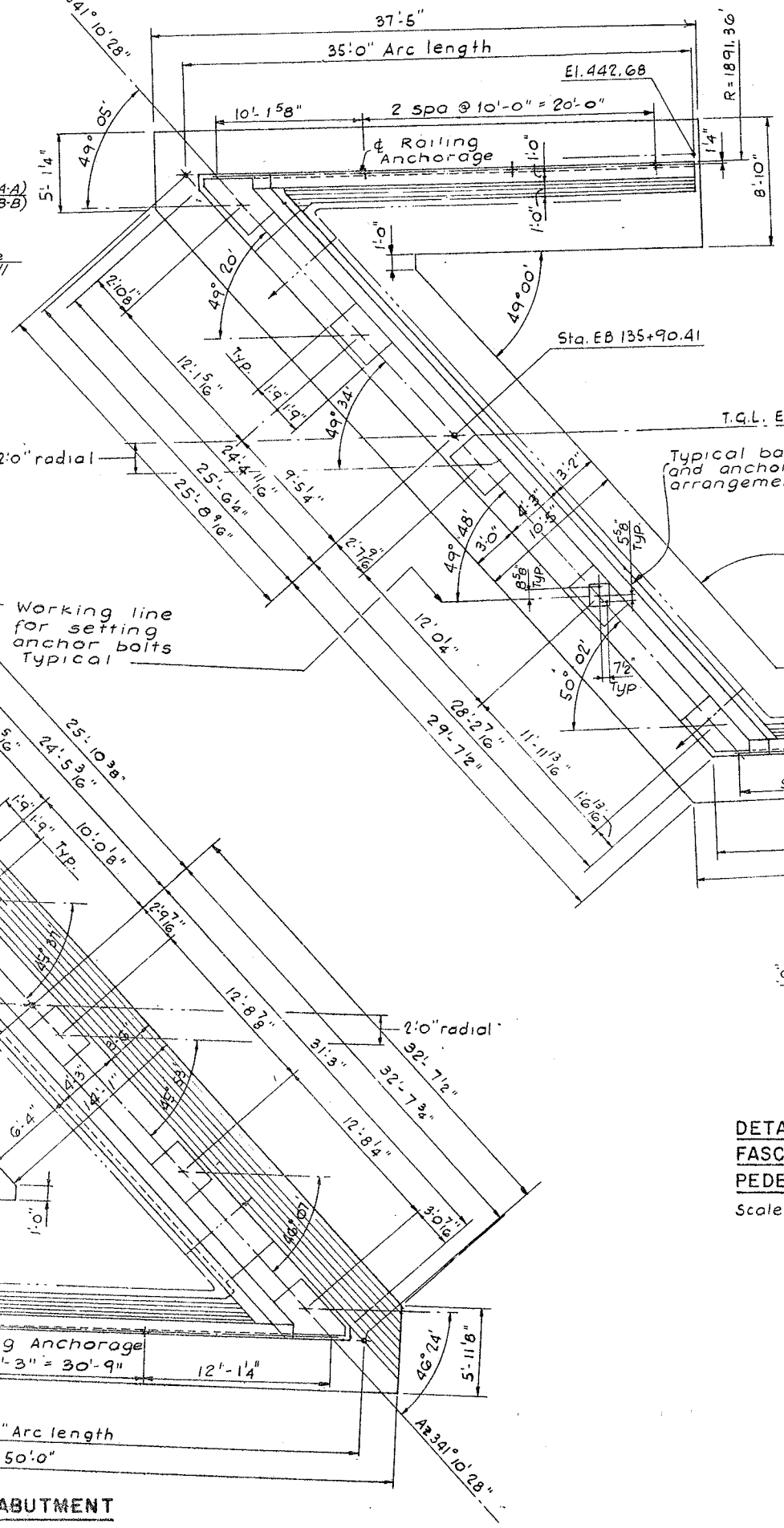

PLAN - EAST ABUTMENT

Scale $\frac{3}{16}$"=1'-0"

DETAIL AT FASCIA PEDESTALS

Scale $\frac{3}{8}$"=1'-0"

BUTTERNUT INTERCHANGE
F.A.I. 690 & F.A.I. 481.

BRIDGE No. 4

E.B. CONNECTION over ROUTE I 481 S.B

ABUTMENT PLANS

DRAWING NO.	SCALE	DATE	SHEET NO.
7504-02	As shown	8/0/70	133

LOCKWOOD, KESSLER & BARTLETT, INC.
CONSULTING ENGINEERS — STOSSET, NEW YORK

F.I.S.H. 70-7

FED. RD. REG. NO.	STATE	FEDERAL AID PROJECT NO.	SHEET NO.	TOT. SHEETS
1	NEW YORK	I-690-3(28)	134	301

INTERSTATE ROUTE CONNECTION 570
BUTTERNUT INTERCHANGE (PHASE 2)

ONONDAGA COUNTY

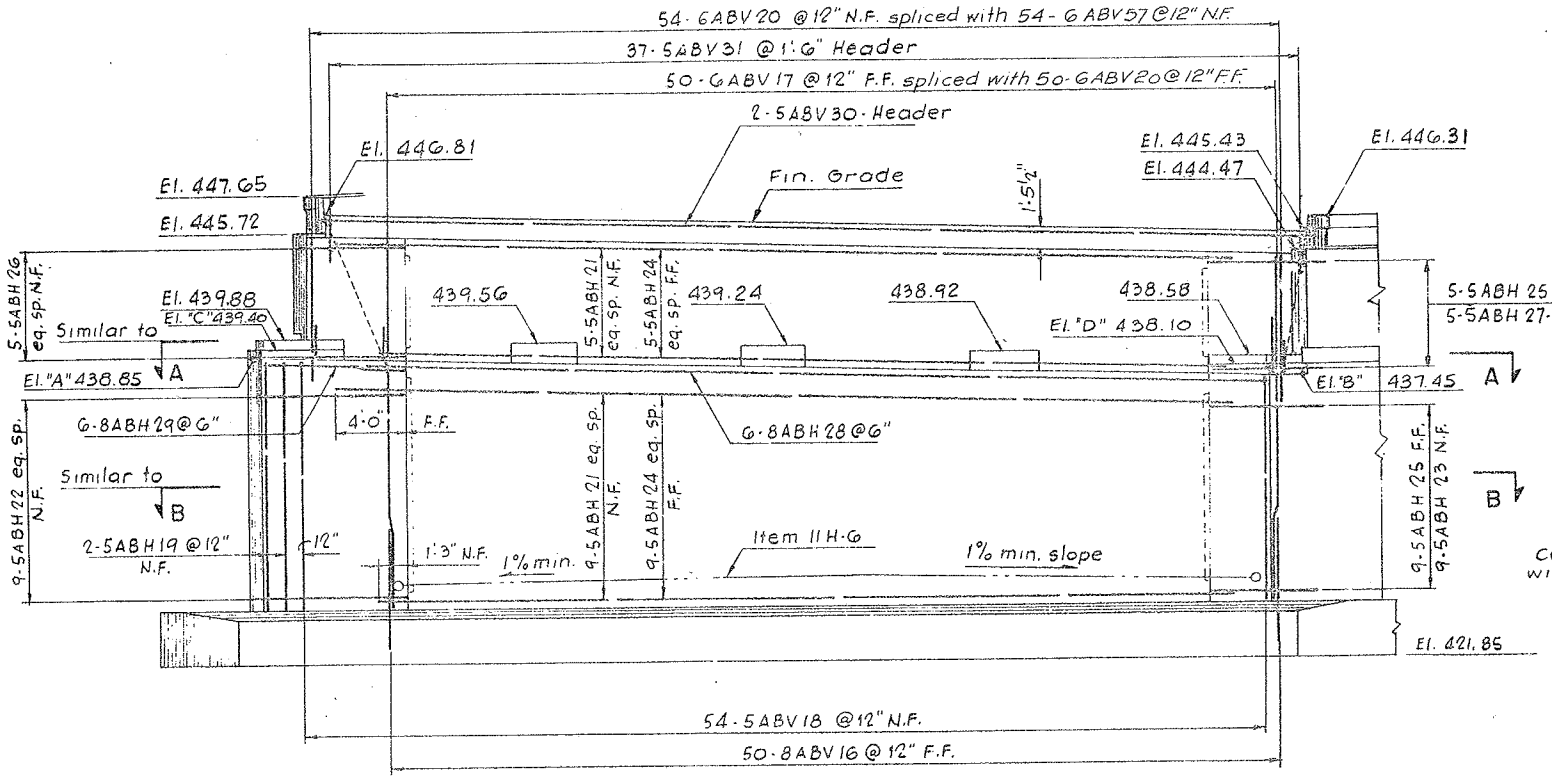

ELEVATION - WEST ABUTMENT
Scale 3/16" = 1'-0"

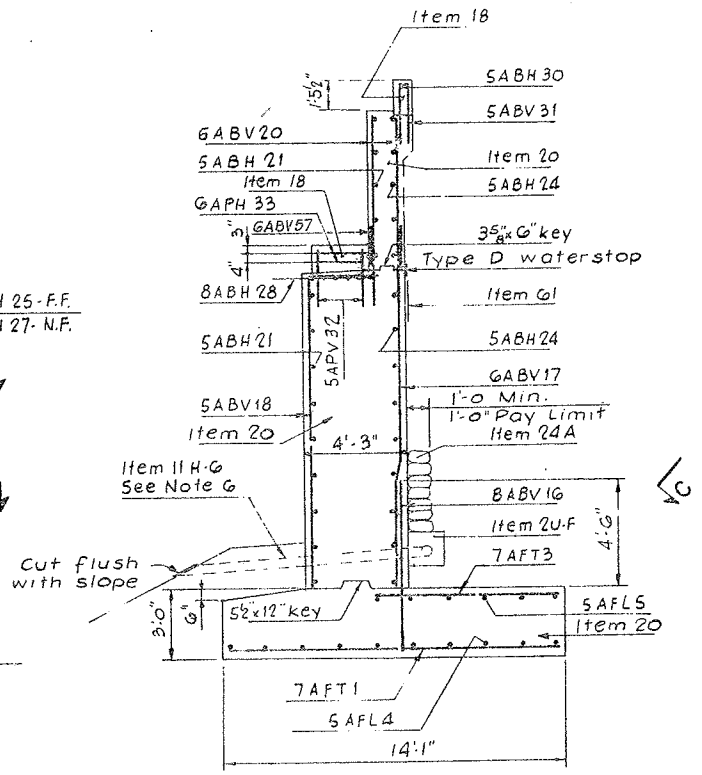

TYPICAL SECTION - W.A.
Scale ¼" = 1'-0"

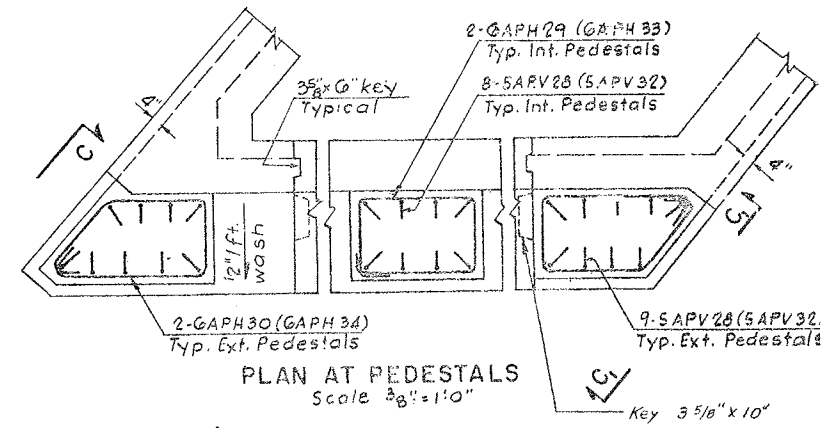

PLAN AT PEDESTALS
Scale 3/8" = 1'-0"

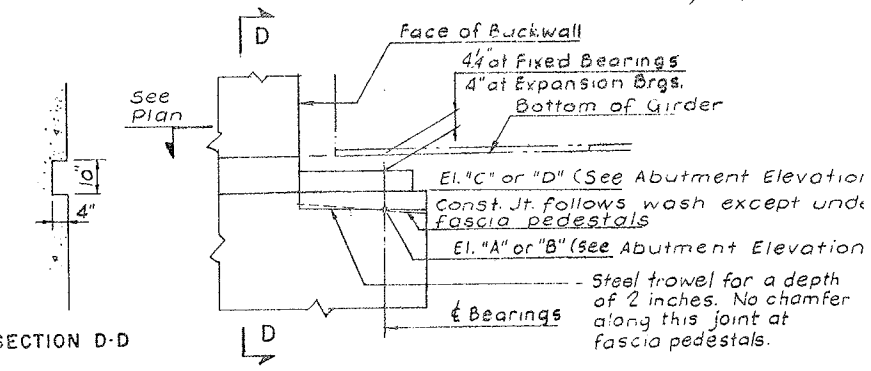

SECTION D-D

ELEVATION C-C
ELEVATION C_1-C_1 (Opposite Hand)
No scale

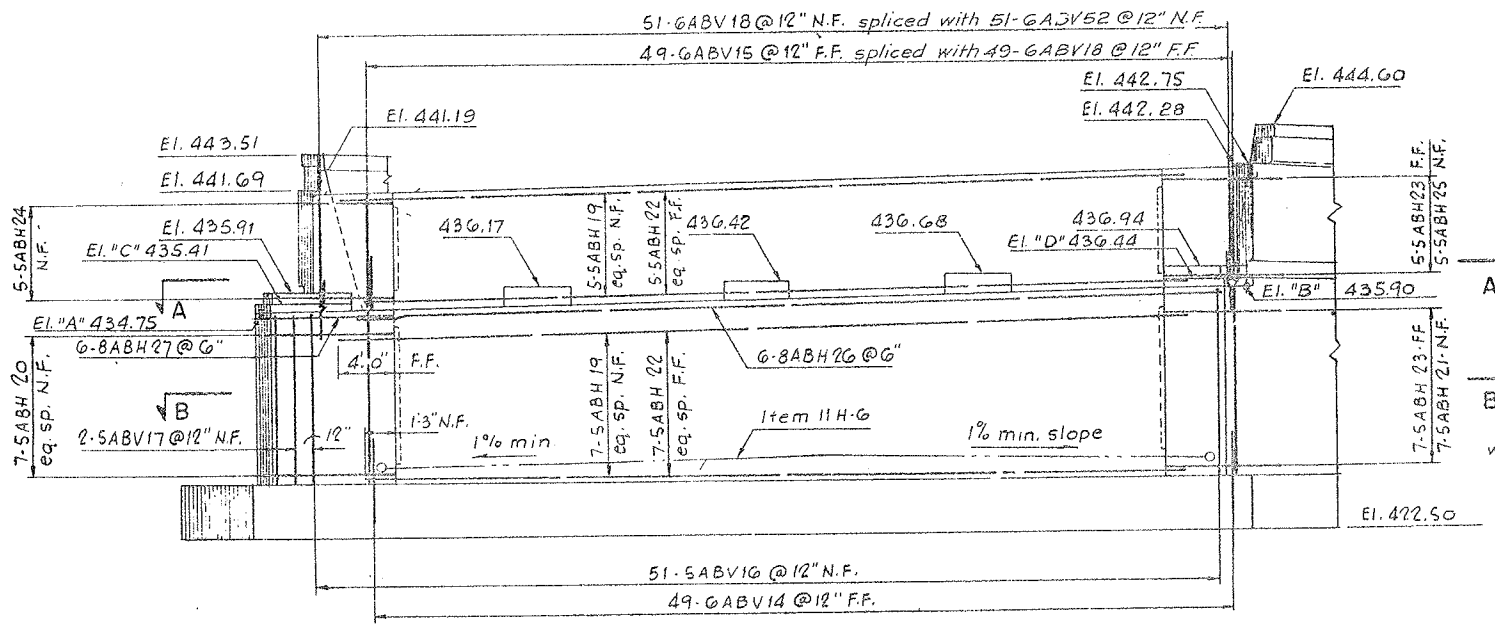

ELEVATION - EAST ABUTMENT
Scale 3/16" = 1'-0"

Information included in parentheses ( ) refers to West Abutment.

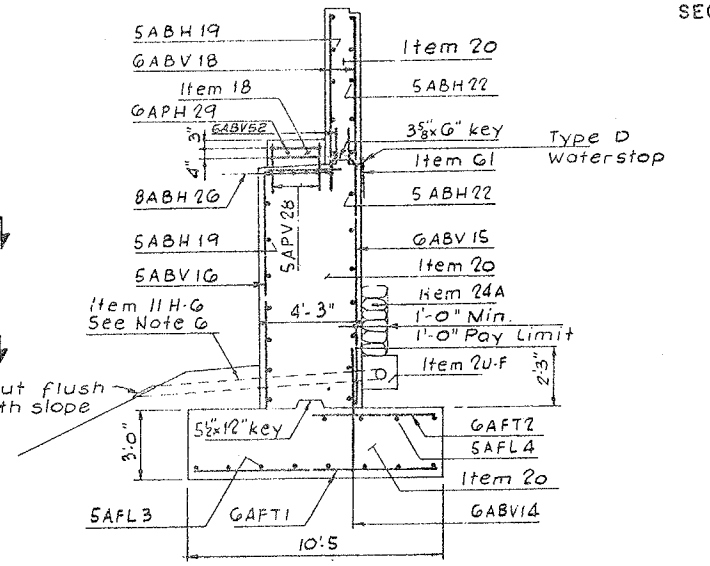

TYPICAL SECTION - E.A.
Scale 3/16" = 1'-0"

NOTES

1. Anchor bolts for Bearings shall be 1¼"ϕ roughened or swedged bolts 1'-4½" long, set 12" into concrete.
2. For Backfill and Excavation details see Sheet No. 128
3. For details of Bearings see Sheet No. 130
4. For Backwall and Waterstop details see Sheet No. 125
5. For Rail Post spacing see Sheet No. 137
6. Non-perforated pipe shall be used through abutment and berm.

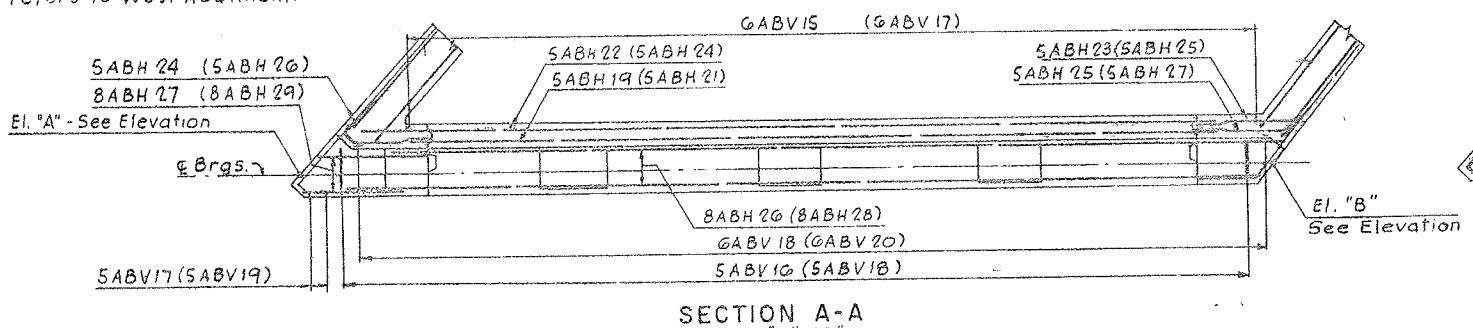

SECTION A-A
Scale 3/16" = 1'-0"

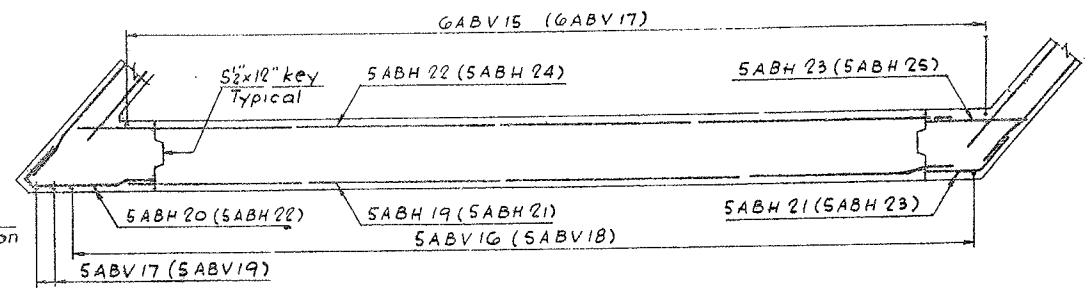

SECTION B-B
Scale 3/16" = 1'-0"

BUTTERNUT INTERCHANGE
F.A.I. 690 & F.A.I. 481
BRIDGE No. 4
E.B. CONNECTION over ROUTE I-481 S.
ABUTMENTS - ELEVATIONS & SECTION

DRAWING NO.	SCALE	DATE	SHEET NO.
7504-02	As shown	8/15/70	134

LOCKWOOD, KESSLER & BARTLETT, INC.
CONSULTING ENGINEERS - SYOSSET, NEW YORK

F.I.S.H. 70-7

FED. RD. REG. NO.	STATE	FEDERAL AID PROJECT NO.	SHEET NO.	TOTAL SHEETS
I	NEW YORK	I-690-3(28) I-481-2(16)	135	150

INTERSTATE ROUTE CONNECTION 570
BUTTERNUT INTERCHANGE (PHASE 2)

ONONDAGA COUNTY

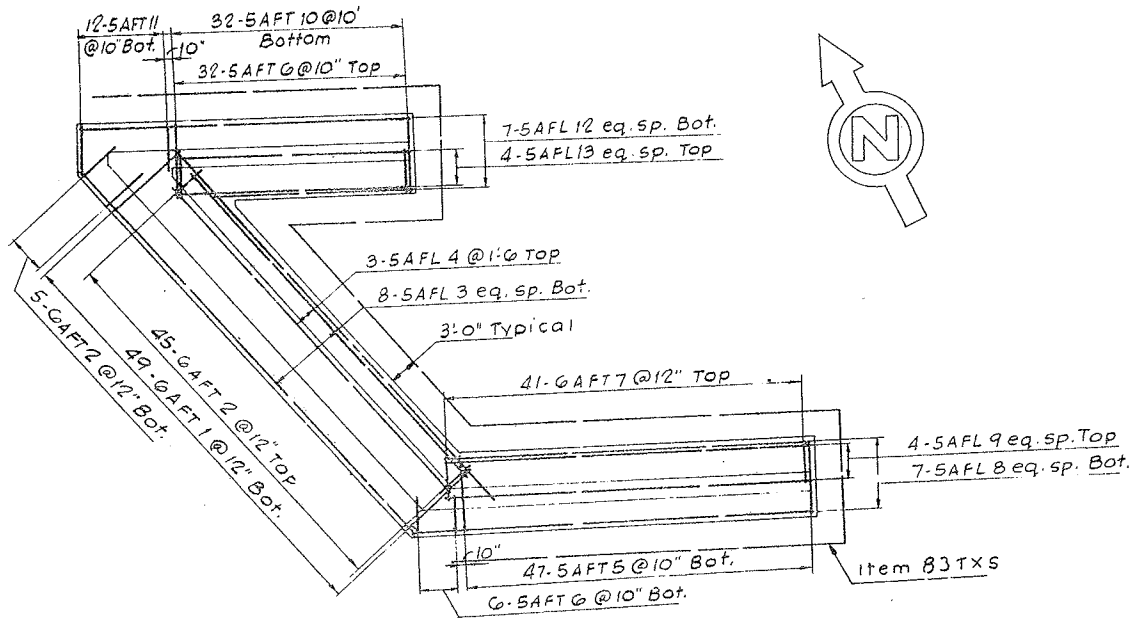

FOOTING PLAN
Scale $\frac{3}{32}$"=1'-0"

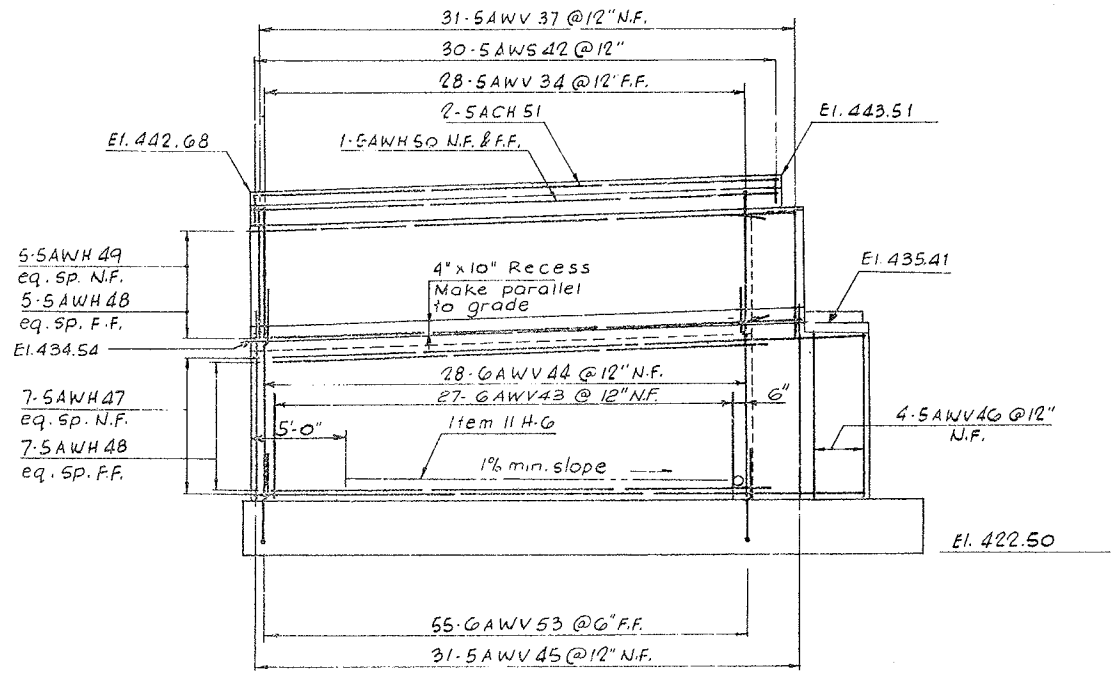

NORTH ELEVATION
Scale $\frac{3}{16}$"=1'-0"

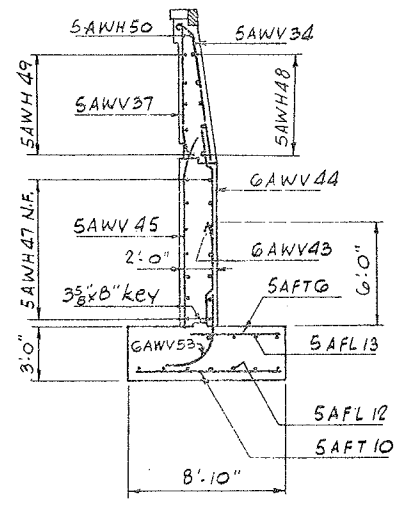

TYPICAL SECTION
NORTH WALL
Scale $\frac{3}{16}$"=1'-0"

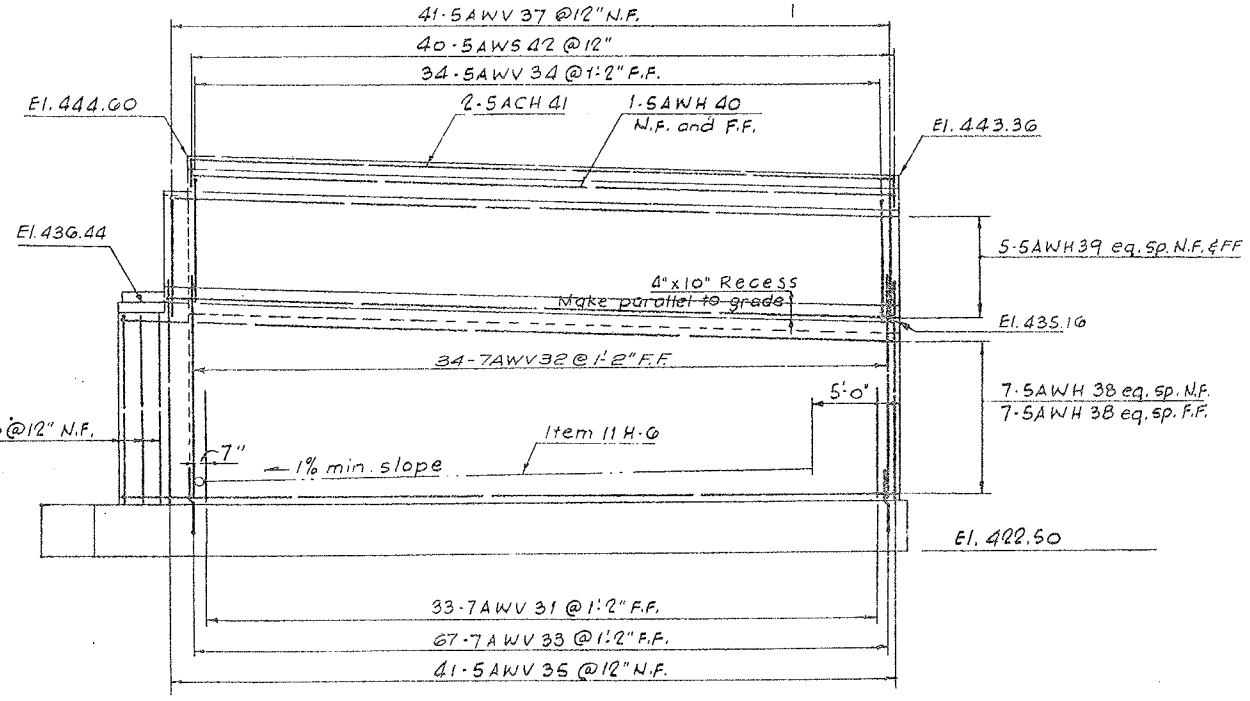

SOUTH ELEVATION
Scale $\frac{3}{16}$"=1'-0"

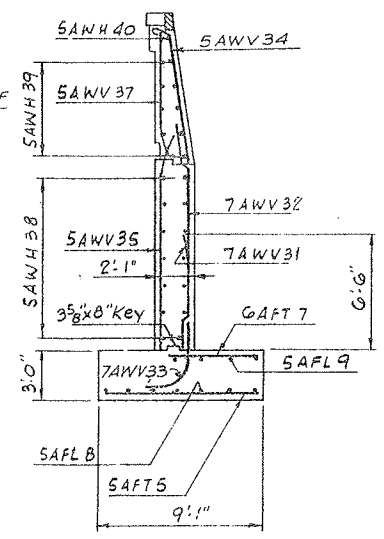

TYPICAL SECTION
SOUTH WALL
Scale $\frac{3}{16}$"=1'-0"

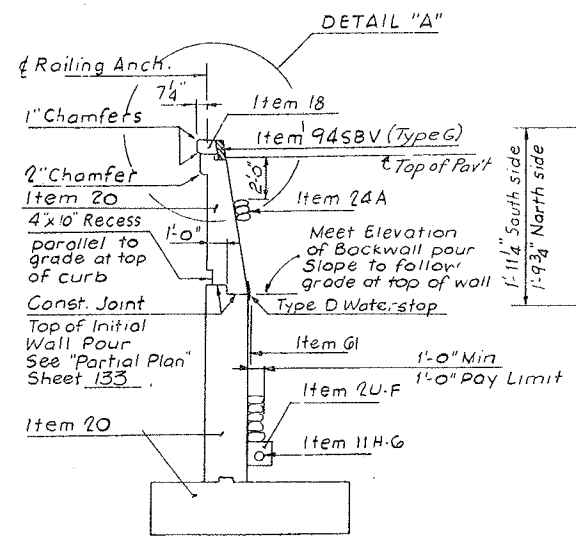

TYPICAL SECTION
THRU WINGWALL

EAST & WEST
ABUTMENTS

No scale

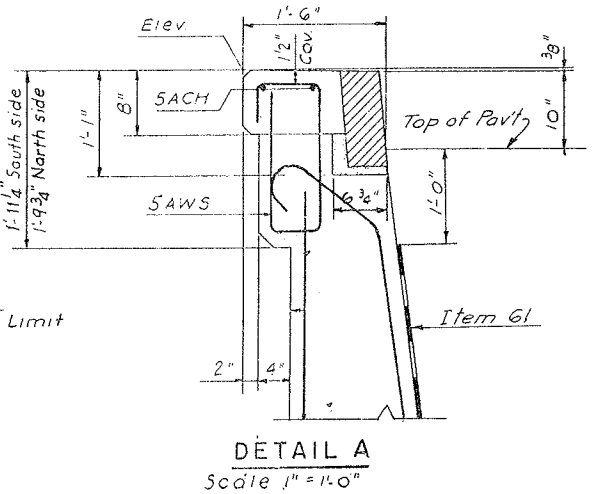

DETAIL A
Scale 1"=1'-0"

BUTTERNUT INTERCHANGE
F.A.I. 690 & F.A.I. 481
BRIDGE No. 4
E.B. CONNECTION over ROUTE I481 S.B
WINGWALLS AT EAST ABUTMENT

DRAWING NO.	SCALE	DATE	SHEET NO.
7504-02	As shown	8/15/70	135

F.I.S.H. 70-7

FED. RD. REG. NO.	STATE	FEDERAL PROJECT AID NO.	SHEET NO.	TOTAL SHEETS
1	NEW YORK	I-690-3(23) I-481-2(116)	136	3025

INTERSTATE ROUTE CONNECTION 570
BUTTERNUT INTERCHANGE (PHASE 2)

ONONDAGA COUNTY

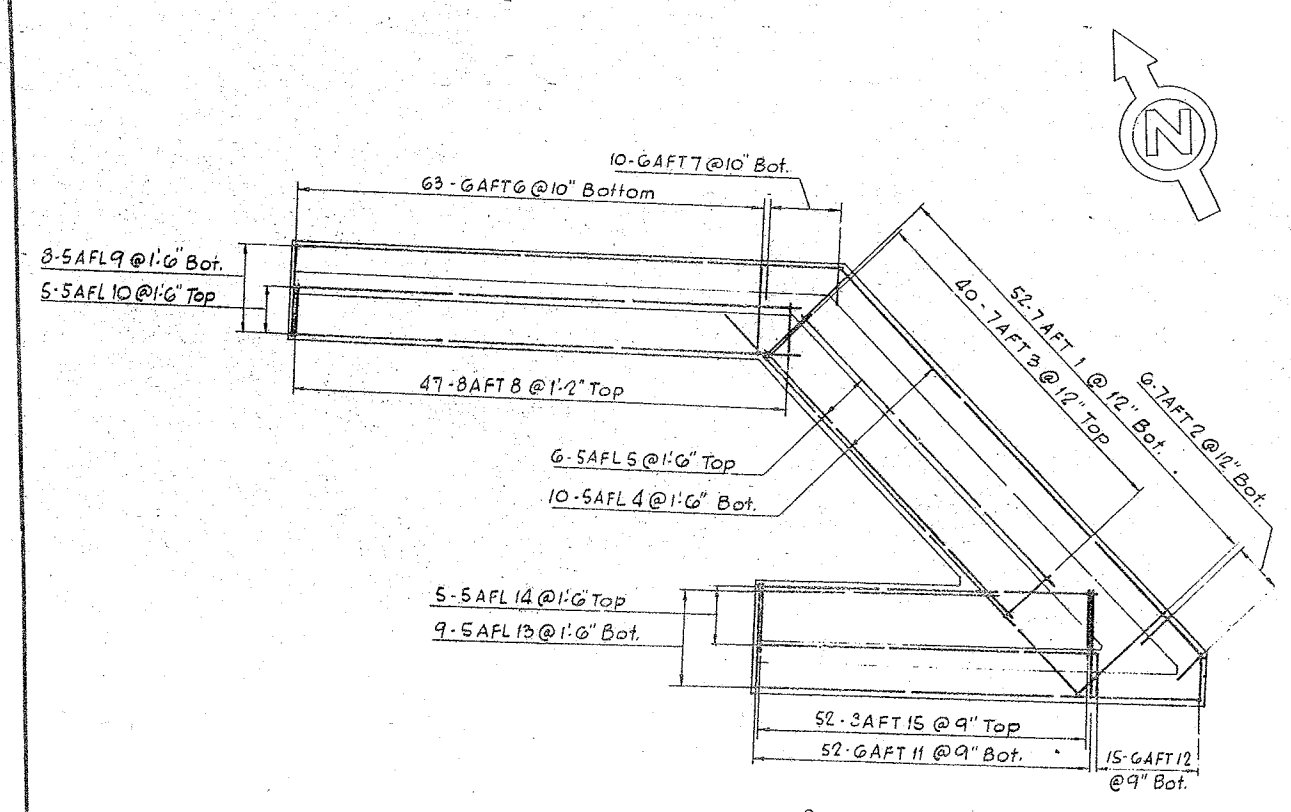

FOOTING PLAN
Scale 3/32" = 1'-0"

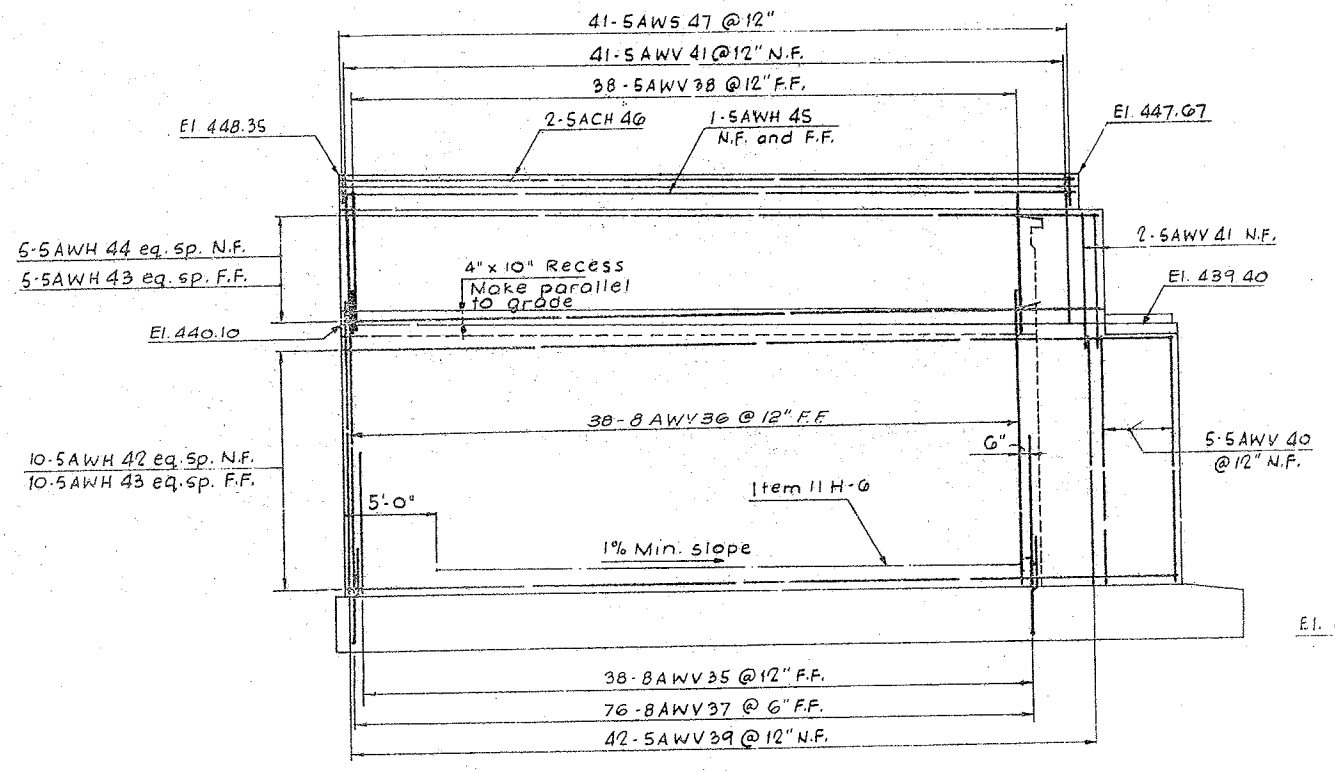

SOUTH ELEVATION

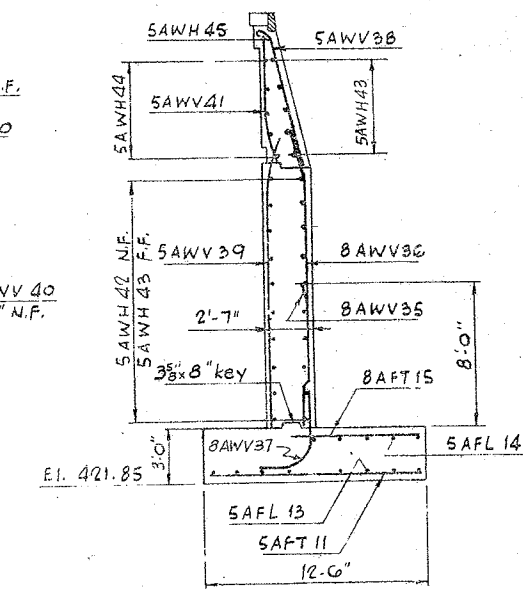

TYPICAL SECTION

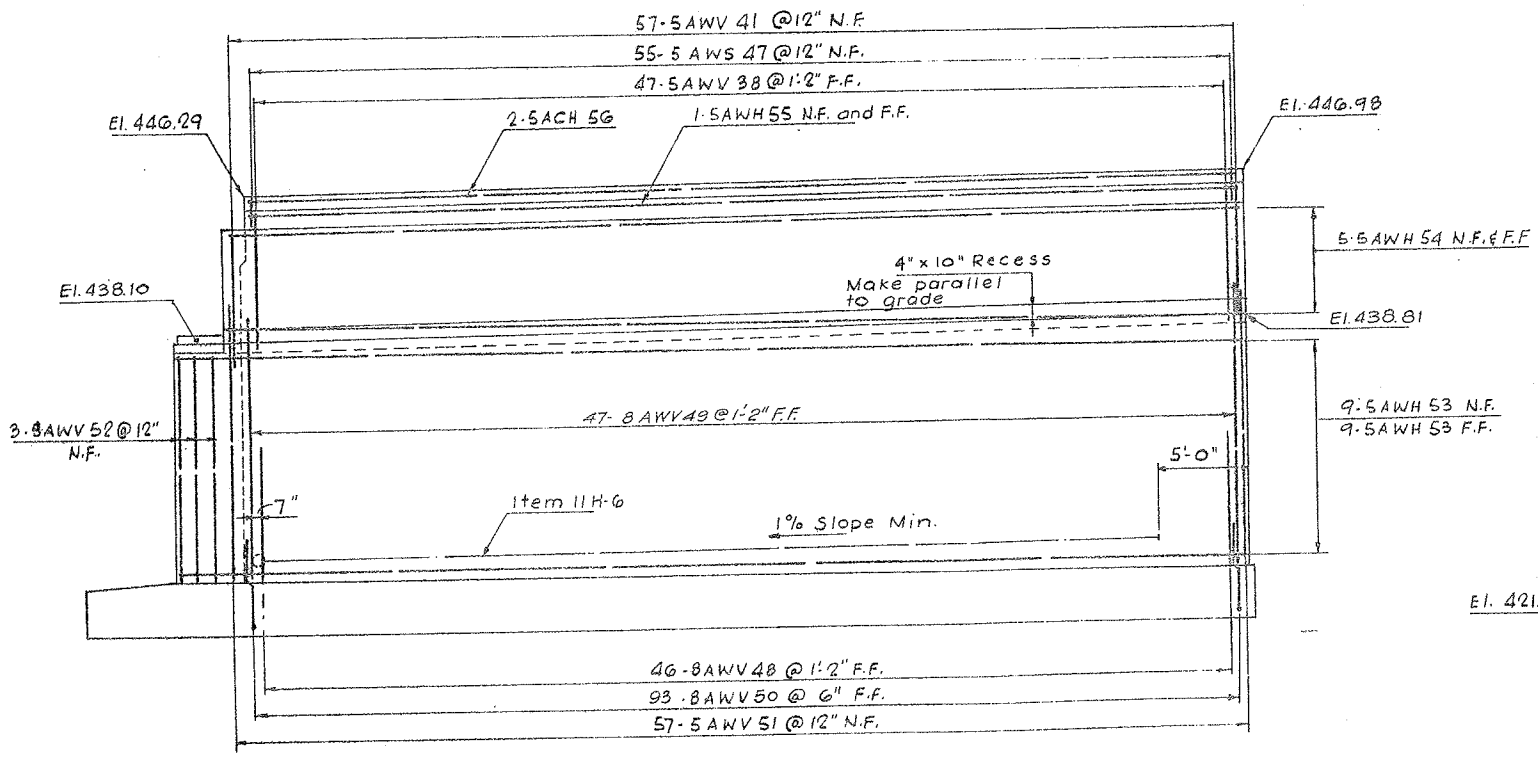

NORTH ELEVATION

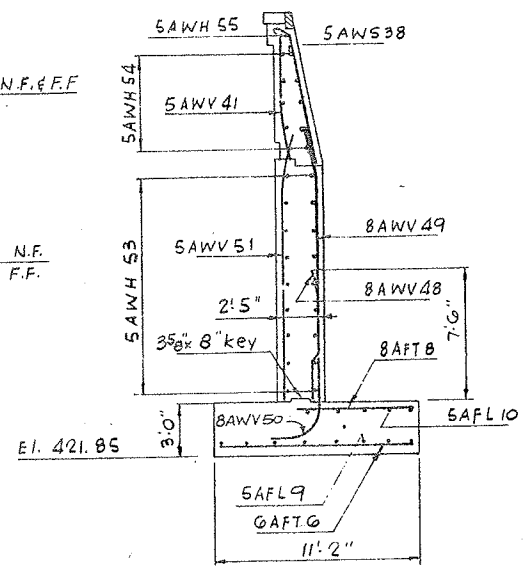

TYPICAL SECTION

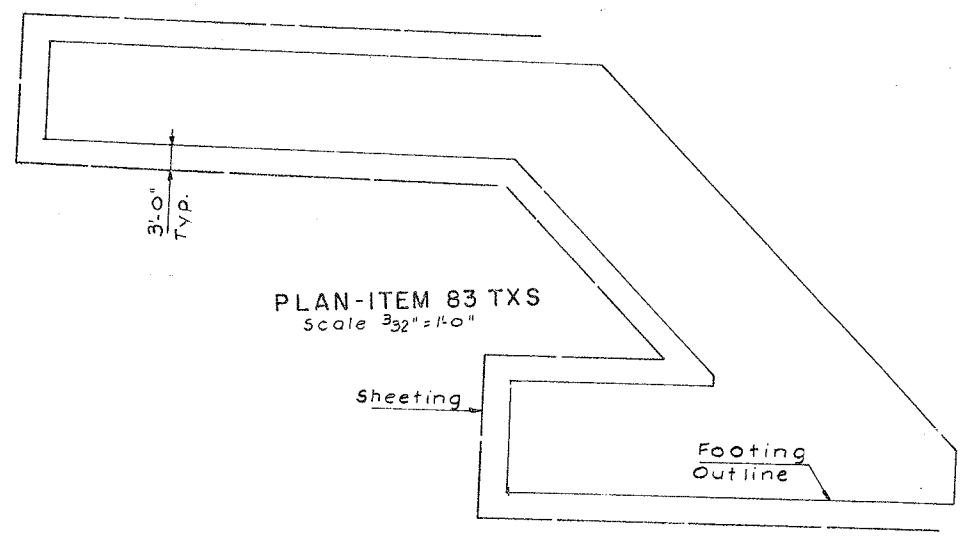

PLAN-ITEM 83 TXS
Scale 3/32" = 1'-0"

BUTTERNUT INTERCHANGE
F.A.I. 690 & F.A.I. 481

BRIDGE No. 4

E.B. CONNECTION over ROUTE I481 S.B
WINGWALLS AT WEST ABUTMENT

DRAWING NO.	SCALE	DATE	SHEET NO.
7504-02	3/16" = 1'-0" Except as shown	8/13/70	136

LOCKWOOD, KESSLER & BARTLETT, INC.
CONSULTING ENGINEERS - SYOSSET, NEW YORK

8.96 (8) 122.52(77)

F.I.S.H. 70

FED. RD. REG. NO.	STATE	FEDERAL PROJECT	AID NO.	SHEET NO.
1	NEW YORK	I-690-3(28) I-481-2(16)		137

INTERSTATE ROUTE CONNECTION
BUTTERNUT INTERCHANGE (PHAS

ONONDAGA COUNTY

135+93.37
134+64.17
129.20

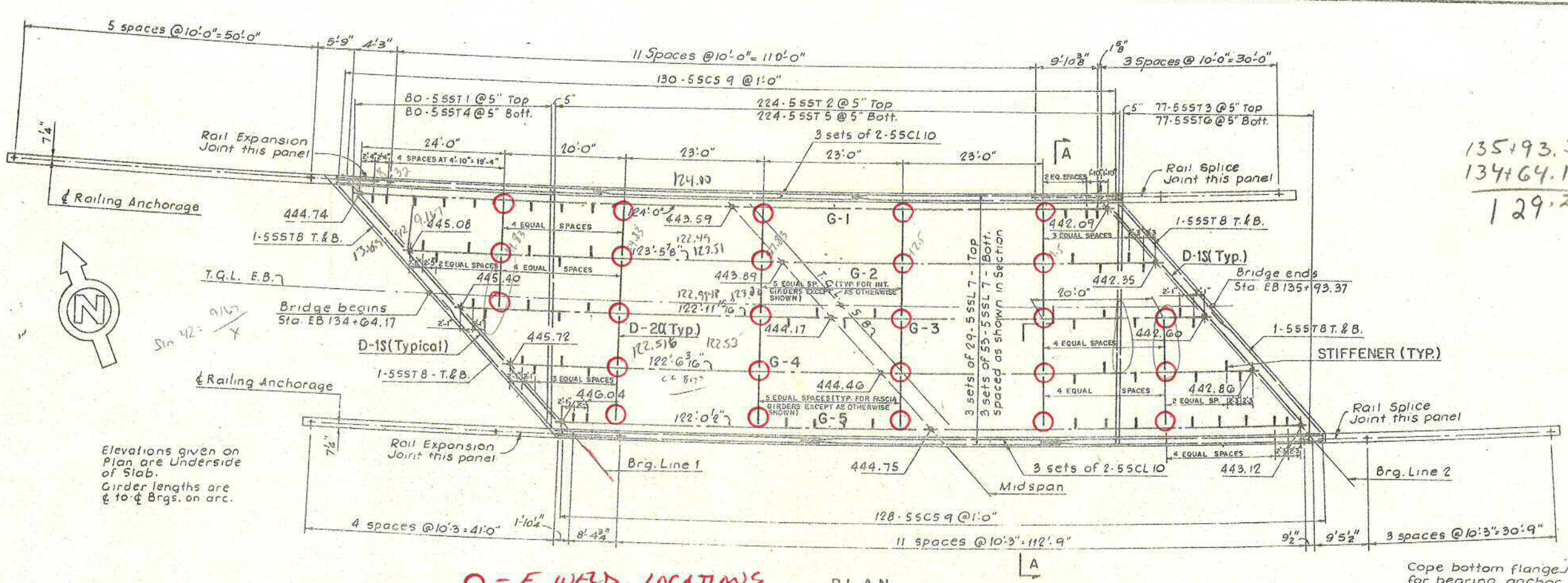

O-E WELD LOCATIONS

PLAN
Scale 1"=10'

ADJUSTMENT FOR CAMBER		
	FASCIA GIRDERS	INTER GIRDERS
SLAB CONCRETE	1 7/8"	2"
V.C.	2"	2"
SUPERIMPOSED DEAD LOAD	7/16"	3/8"
D.L. STEEL ERECTED	11/16"	5/8"
TOTAL	5"	5"

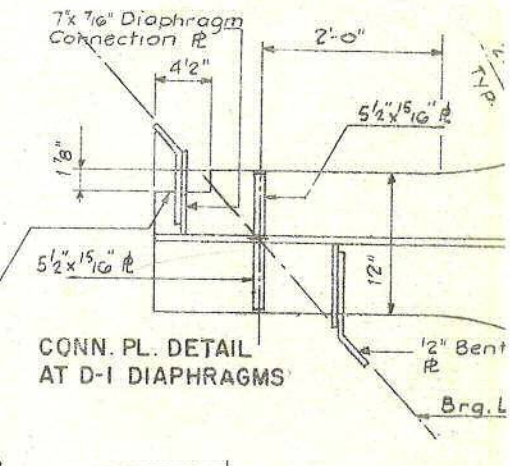

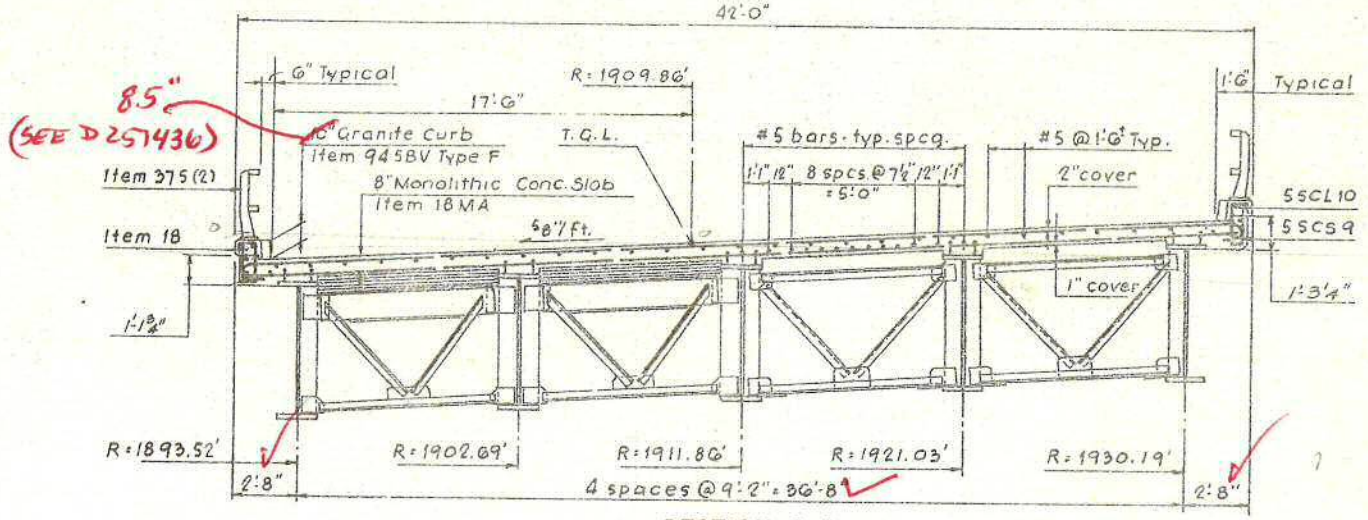

SECTION A-A
Scale 1/4"=1'-0"

Note: For diaphragm details, see sheet No. 129

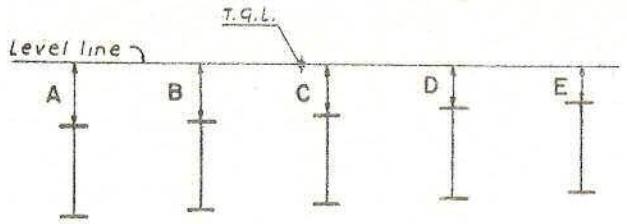

THEORETICAL VERTICAL MEASUREMENTS AT ℄ BRG.

BRG. LINE	VERTICAL MEASUREMENTS TO TOP OF STEEL				
	A	B	C	D	E
1	1'-6 3/8"	1'-2 5/16"	10 3/8"	6 5/8"	2 3/4"
2	1'-4 13/16"	1'-1 11/16"	10 11/16"	7 9/16"	4 1/2"

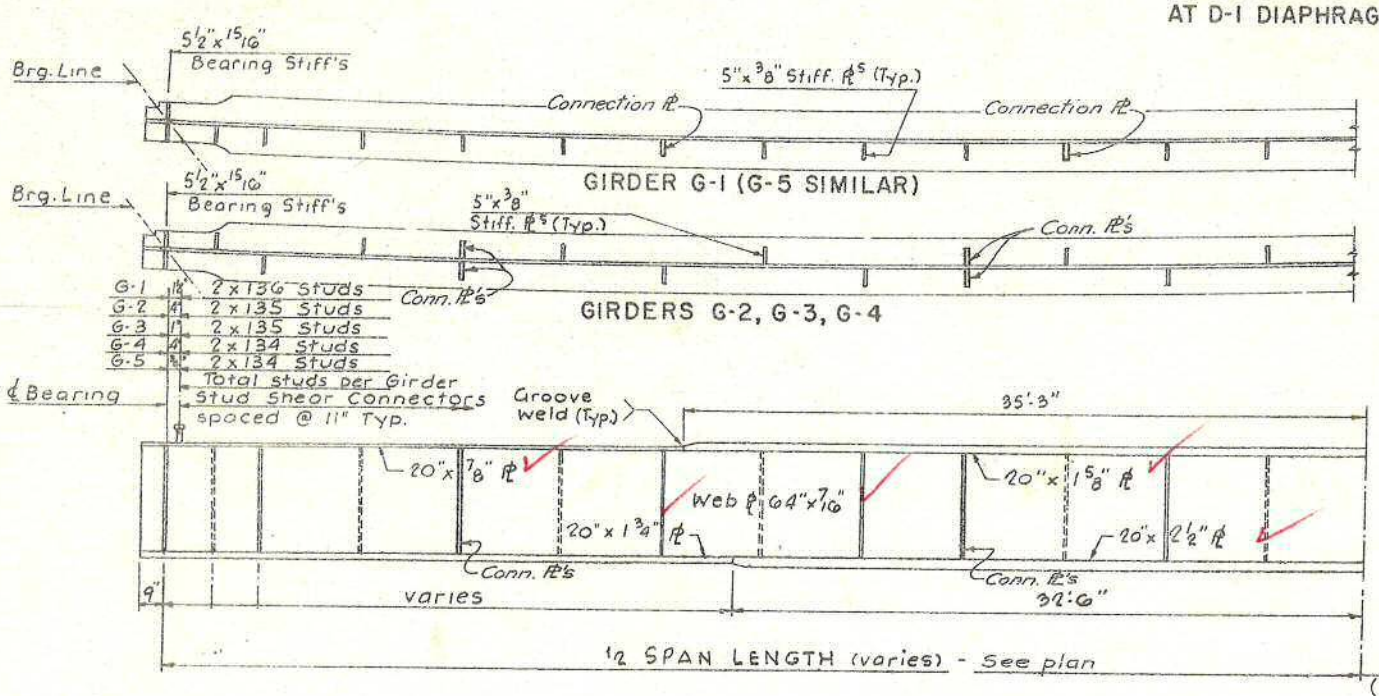

Note: Diaphragm Co Pl to be 7"x 7/16"

26.75
29.00



PLAN-BOTTOM FLANGE
No scale

32'-6"
32'-6"

BUTTERNUT INTERCHANGE
F.A.I. 690 & F.A.I. 481
BRIDGE No. 4
E.B. CONNECTION over ROUTE I 481
SUPERSTRUCTURE

DRAWING NO.	SCALE	DATE
7504-02	As shown	8/15/10

LOCKWOOD, KESSLER & BARTLETT, I

Traced by
Checked by B.D.LOWRY

FED ROAD REG. NO.	STATE	CONTRACT NO.	SHEET NO.	TOTAL SHEETS
1	N.Y.	D259214	270	432

BRIDGE REHABILITATION PROJECT (ELEMENT SPECIFIC)
VARIOUS BRIDGES ON INERSTATE 481
TOWNS OF DEWITT AND CICERO
ONONDAGA COUNTY
P.I.N. 305613 B.I.N. 1093510

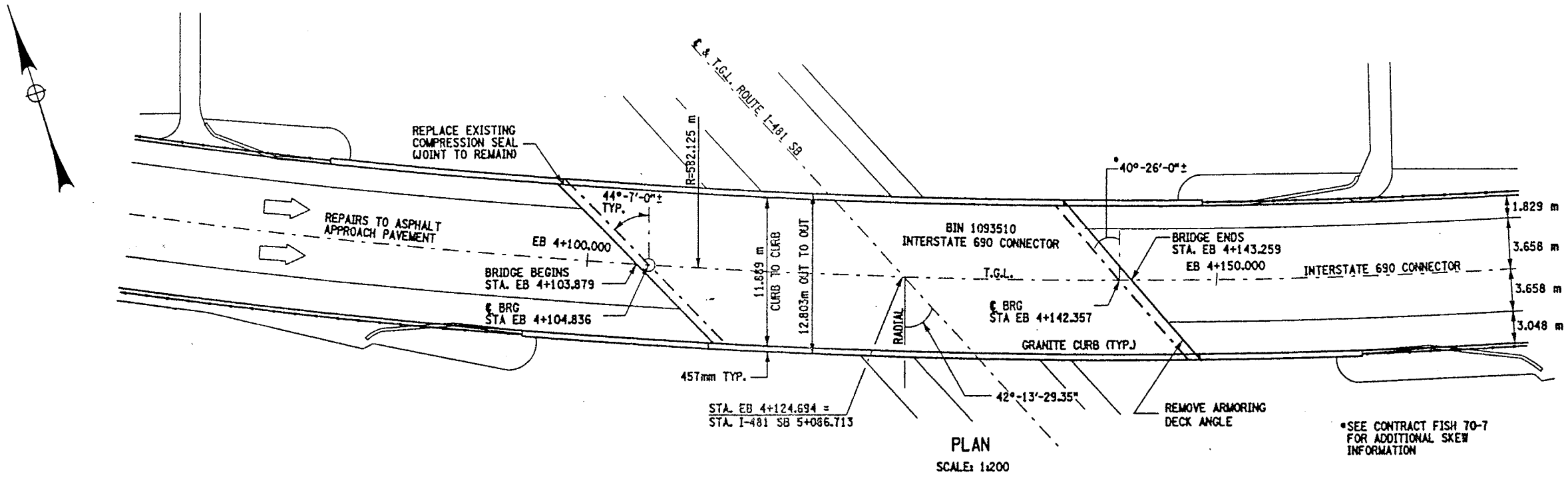

PLAN
SCALE: 1:200

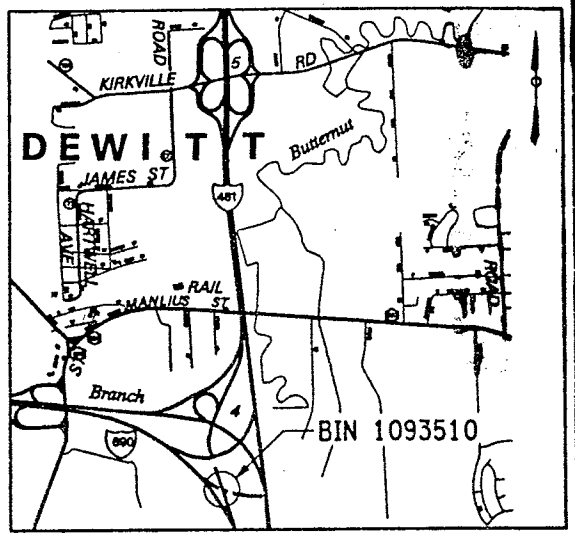

LOCATION MAP
QUADRANGLE
SCALE: 1:24000

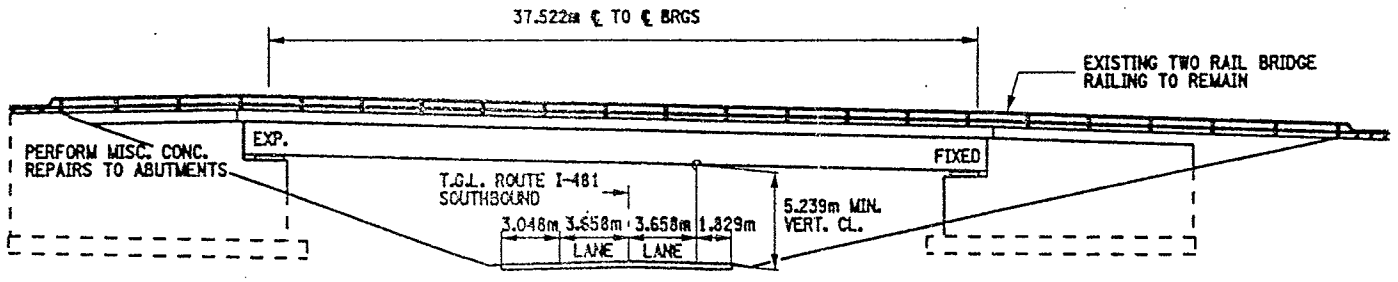

ELEVATION
SCALE: 1:200

WORK TO BE DONE ON BIN 1093510:

1. ESTABLISH MP&T SCHEME FOR STAGE CONSTRUCTION.
2. REPLACE EXISTING COMPRESSION SEAL AT BEG. ABUTMENT (WEST). EXISTING JOINT & ARMORING DECK ANGLE TO REMAIN.
3. REMOVE EXISTING ARMORED DECK ANGLE AT END ABUTMENT (EAST).
4. REPAIR DECK AREA AT END ABUTMENT (EAST), WHERE ARMORING DECK ANGLE WAS REMOVED.
5. PERFORM MINOR REPAIRS TO ASPHALT APPROACHES (SEE JD-45).
6. PERFORM MISCELLANEOUS REPAIRS TO CONCRETE ELEMENTS AT ABUTMENT.

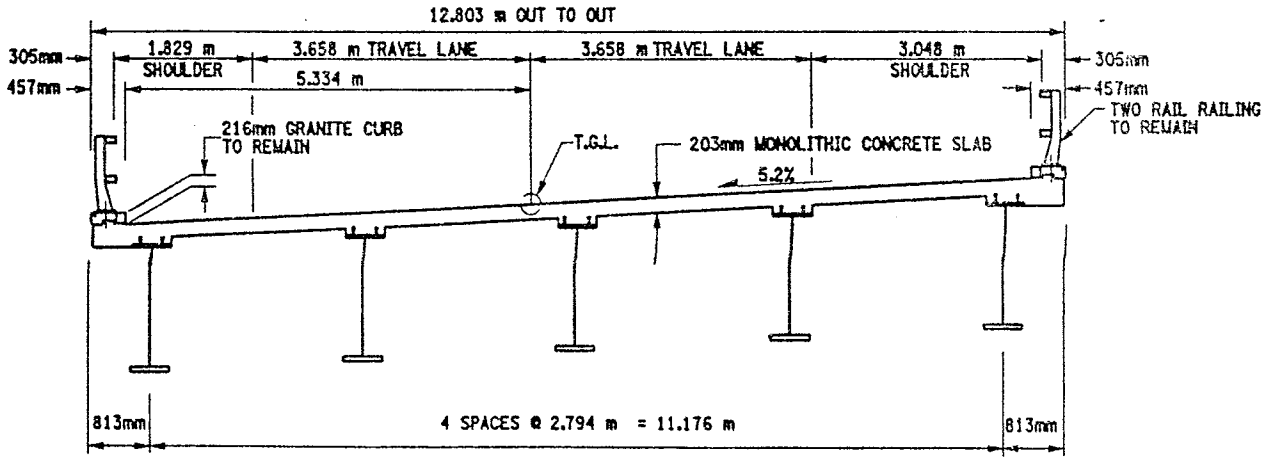

TYPICAL BRIDGE SECTION
SCALE: 1:50

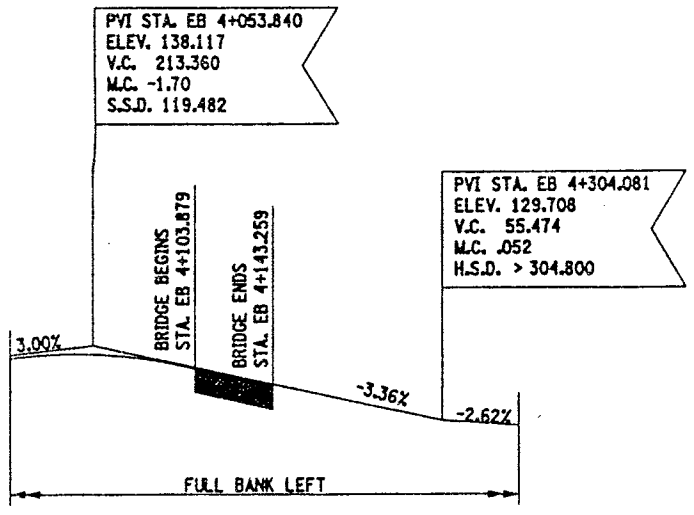

PROFILE
NOT TO SCALE

BIN 1093510

ALL DIMENSIONS ARE IN m UNLESS OTHERWISE NOTED

AS BUILT REVISIONS

SIGNATURE DATE

INTERSTATE 690 RAMP
OVER
INTERSTATE 481 SB

PLAN, ELEVATION AND BRIDGE SECTION

STATE OF NEW YORK
DEPARTMENT OF TRANSPORTATION

FILENAME	REGION	DATE	DRAWING NO.
305613AD.G1A	3	10/02	GP12-1

ESTIMATED BY ____ DRAFTED BY ____ CHECKED BY ____
DESIGNED BY ____ CHECKED BY ____
JOB MANAGER ____
DESIGN SUPERVISOR ____

FED ROAD REG. NO.	STATE	CONTRACT NO.	SHEET NO.	TOTAL SHEETS
1	N.Y.	D259214	271	432

BRIDGE REHABILITATION PROJECT (ELEMENT SPECIFIC)
VARIOUS BRIDGES ON INTERSTATE 481
TOWNS OF DEWITT AND CICERO
ONONDAGA COUNTY
P.I.N. 305613 B.I.N. 1093510

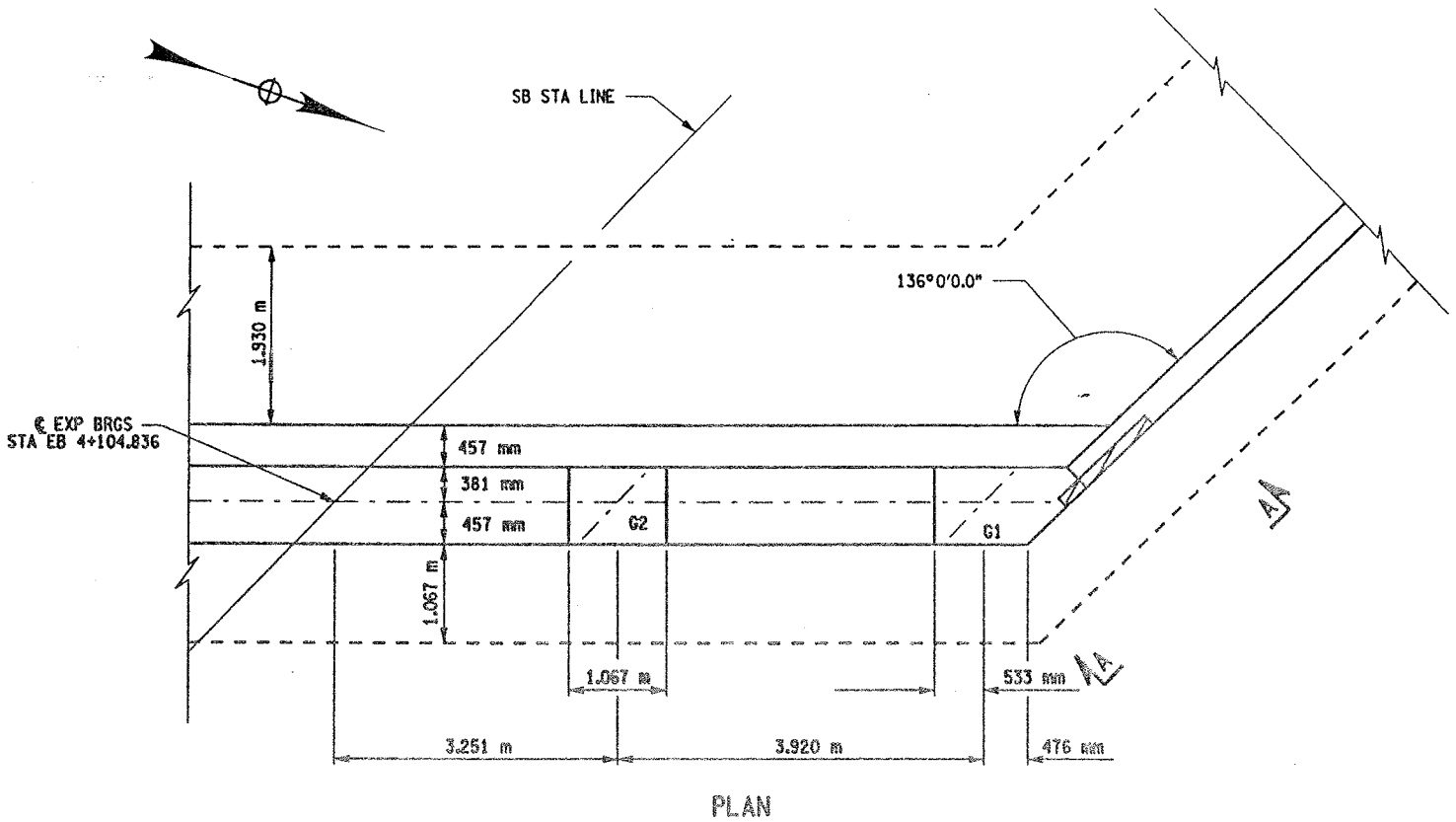

PLAN
SCALE 1:40

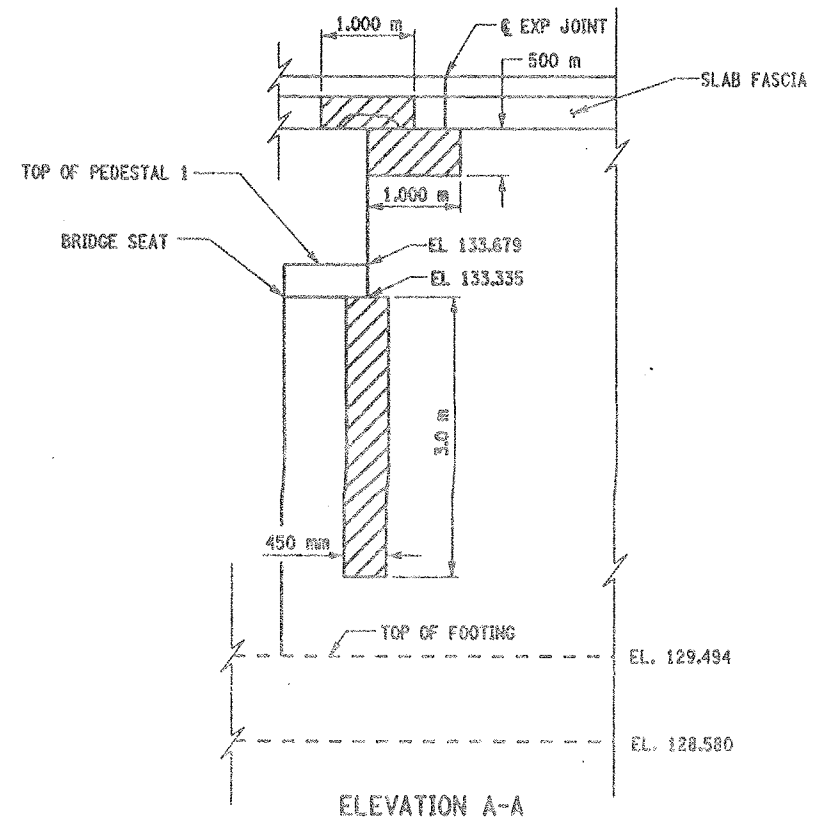

ELEVATION A-A
SCALE 1:40

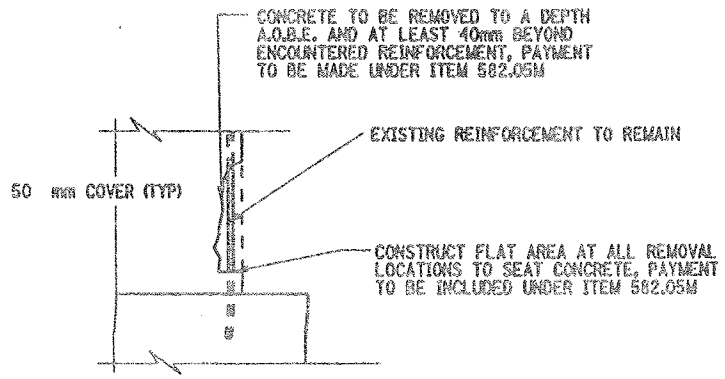

REMOVAL DETAIL
NOT TO SCALE

NOTES:

1. ALL DIMENSIONS SHOWN FOR CONCRETE REMOVAL ARE APPROXIMATE AND SHALL BE FIELD VERIFIED BY THE CONTRACOTR AND E.I.C.
2. REMOVE CONCRETE TO LIMITS SHOWN AS WELL AS TO SOUND CONCRETE A.O.B.E.
3. WHEN REMOVING EXISITING CONCRETE, SAWCUT 5mm MIN. TO PRODUCE NEAT REMOVAL LINES. ANY COST TO BE INCLUDED IN THE BID PRICE FOR ITEM 582.05M
4. ALL EXISITING REINFORCEMENT TO REMAIN.
5. ELEVATIONS ARE GIVEN FOR QUANTITY ESTIMATES ONLY.
6. REFER TO FISH 70-7 ORIGINAL PLANS AND CONTRACT D251436 FOR ADDITIONAL PLANS.

AREAS OF PROPOSED WORK: ITEM 582.05M REMOVAL OF STRUCTURAL CONCRETE- REPLACEMENT WITH CLASS A CONCRETE

LIST OF ITEMS USED:

ITEM 582.05M - REMOVAL OF STRUCTURAL CONCRETE - REPLACEMENT WITH CLASS A CONCRETE (CM)

ALL DIMENSIONS ARE IN m UNLESS OTHERWISE NOTED

AS BUILT REVISIONS

SIGNATURE DATE

INTERSTATE 690 RAMP
OVER
INTERSTATE 481 SB
WEST ABUTMENT
PLAN AND ELEVATION

STATE OF NEW YORK
DEPARTMENT OF TRANSPORTATION

FILENAME	REGION	DATE	DRAWING NO.
305613AD.A1B	3	10/02	AB12-1

DESIGN SUPERVISOR ____ JOB MANAGER ____ DESIGNED BY ____ CHECKED BY ____
ESTIMATED BY ____ DRAFTED BY ____ CHECKED BY ____

FED ROAD REG. NO.	STATE	CONTRACT NO.	SHEET NO.	TOTAL SHEETS
1	N.Y.	D259214	409	432

BRIDGE REHABILITATION PROJECT (ELEMENT SPECIFIC)
VARIOUS BRIDGES ON INTERSTATE 481
TOWNS OF DEWITT AND CICERO
ONONDAGA COUNTY
P.I.N. 305613 B.I.N. 1093510

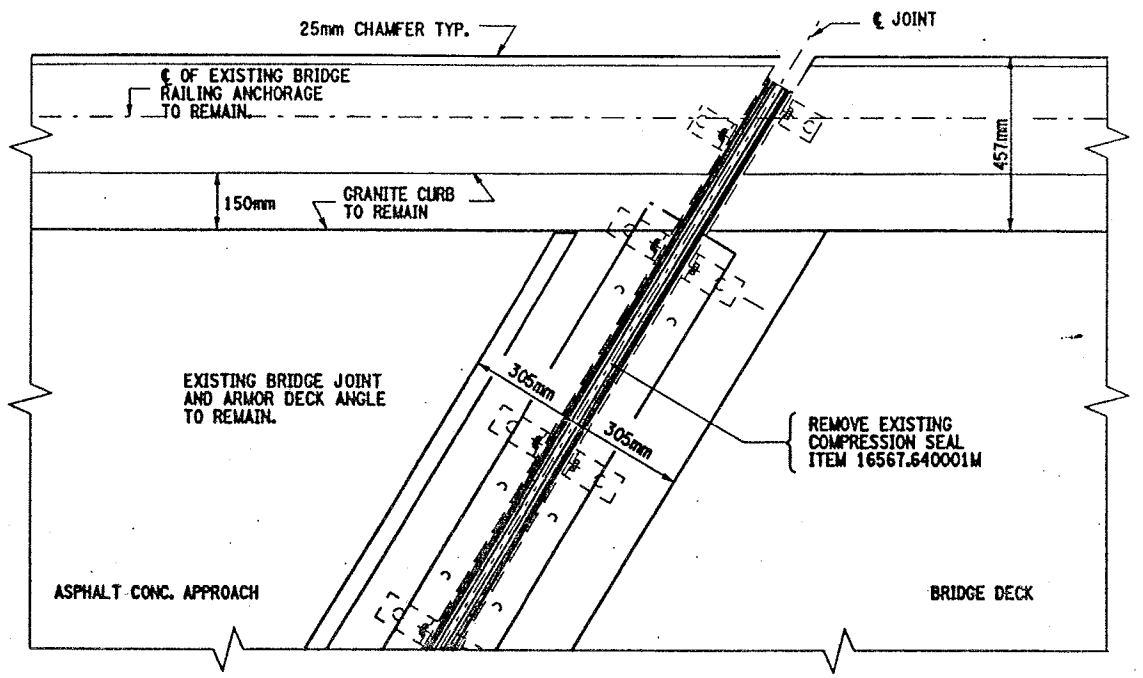

EXISTING BEG. ABUTMENT PLAN VIEW

BIN 1093510 - WEST ABUTMENT.

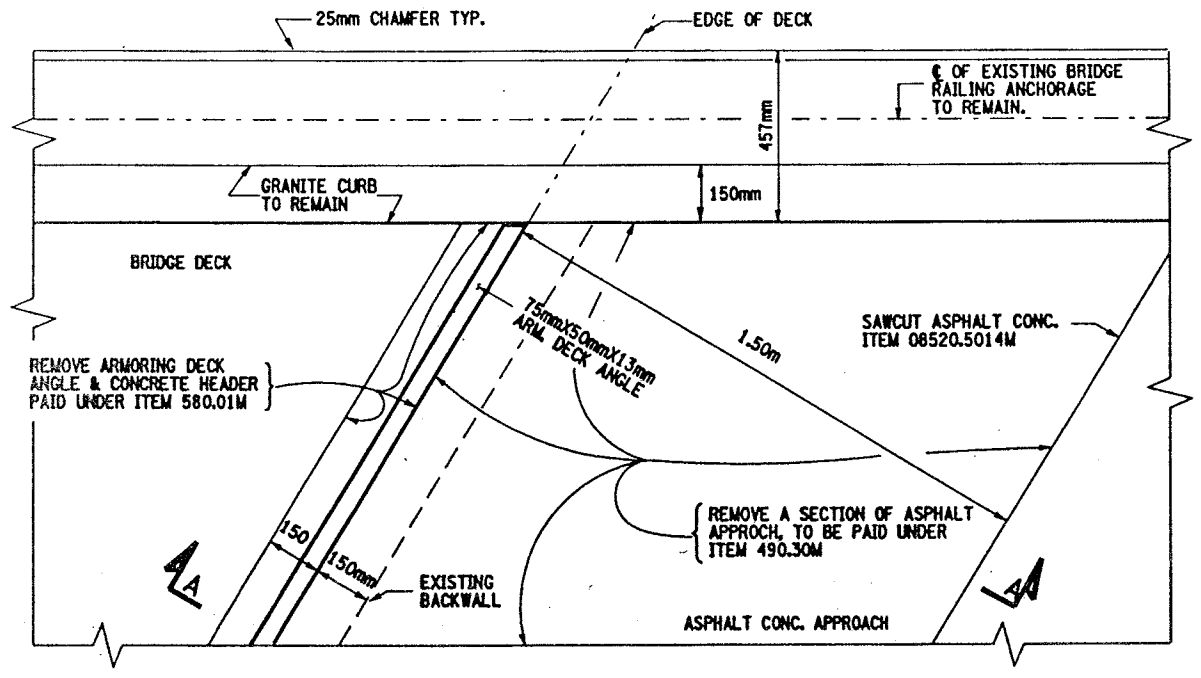

EXISTING END ABUTMENT PLAN VIEW

BIN 1093510 - EAST ABUTMENT.

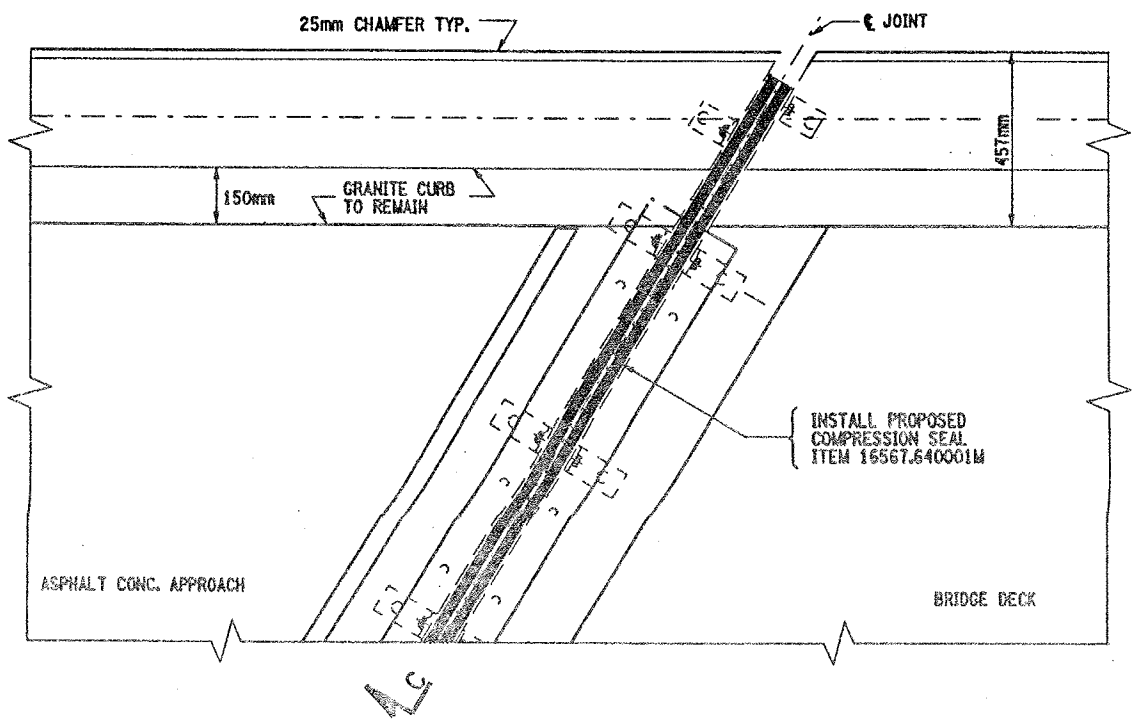

PROPOSED BEG ABUTMENT PLAN VIEW

BIN 1093510 - WEST ABUTMENT.

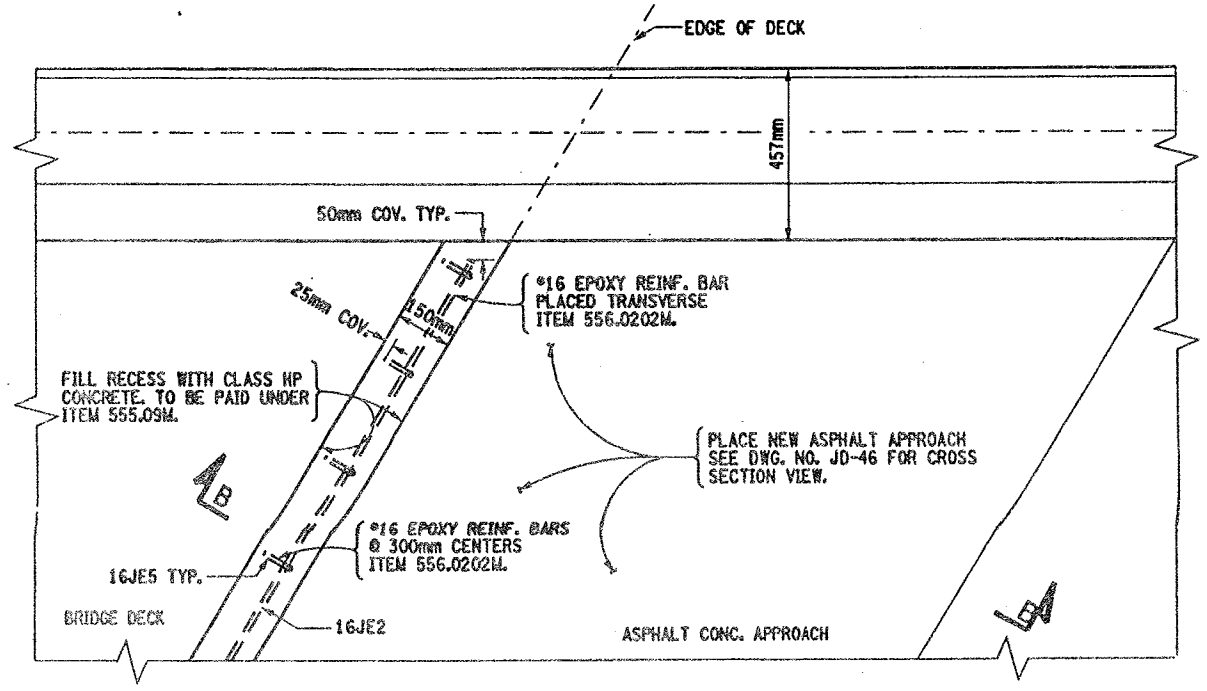

PROPOSED END ABUTMENT PLAN VIEW

BIN 1093510 - EAST ABUTMENT.

NOTES:

1. REMOVAL OF ARMORING DECK ANGLE SHALL BE FROM CURB TO CURB.
2. FOR SECTION VIEWS SEE DWG. NO. JD-46.
3. SEE BRIDGE JOINT TABLE FOR SKEW ANGLE.
4. REFER TO DWG. NO. JT-2 FOR PROPOSED BRIDGE JOINT WORK.

SPECIAL NOTE:

BIN 1093510 - BEGINNING ABUTMENT (WEST ABUT) REPLACE COMPRESSION SEAL (TYPE A-5), EXISTING BRIDGE JOINT AND ARMORING DECK ANGLE TO REMAIN.

- END ABUTMENT JOINT, REMOVE EXISTING ARMORED DECK ANGLE AND PERFORM REPAIRS TO ASPHALT APPROACH.

ITEMS USED:

ITEM 490.30M	- MISC. COLD MILLING OF BIT. CONC. (SM)
ITEM 08520.5014M	- SAWCUTTING BIT. CONC. (M)
ITEM 555.09M	- STRUCT. CONCRETE, CLASS "HP" (CM)
ITEM 556.0202M	- EPOXY-COATED BAR REINF. FOR STRUCT. (Kg)
ITEM 16567.640001M	- REPLACE COMPRESSION SEAL FOR EXISTING BRIDGE JOINT (M)
ITEM 580.01M	- REMOVAL OF STRUCT. CONCRETE (CM)

ALL DIMENSIONS ARE IN mm UNLESS OTHERWISE NOTED

AS BUILT REVISIONS

SIGNATURE DATE

INTERSTATE 690 EB
OVER
INTERSTATE 481 SB

BRIDGE JOINT DETAILS

STATE OF NEW YORK
DEPARTMENT OF TRANSPORTATION

FILENAME	REGION	DATE	DRAWING NO.
305613AJJA1	3	10/02	JD-45

DESIGN SUPERVISOR ____ JOB MANAGER ____ DESIGNED BY ____ ESTIMATED BY ____ DRAFTED BY ____ CHECKED BY ____ CHECKED BY

BIN: 1093510
I690 EB RAMP (FUTURE) /
I481 SB

BEGIN ABUTMENT DETERIORATION SKETCH

NOT TO SCALE

DATE: 01/23/2014

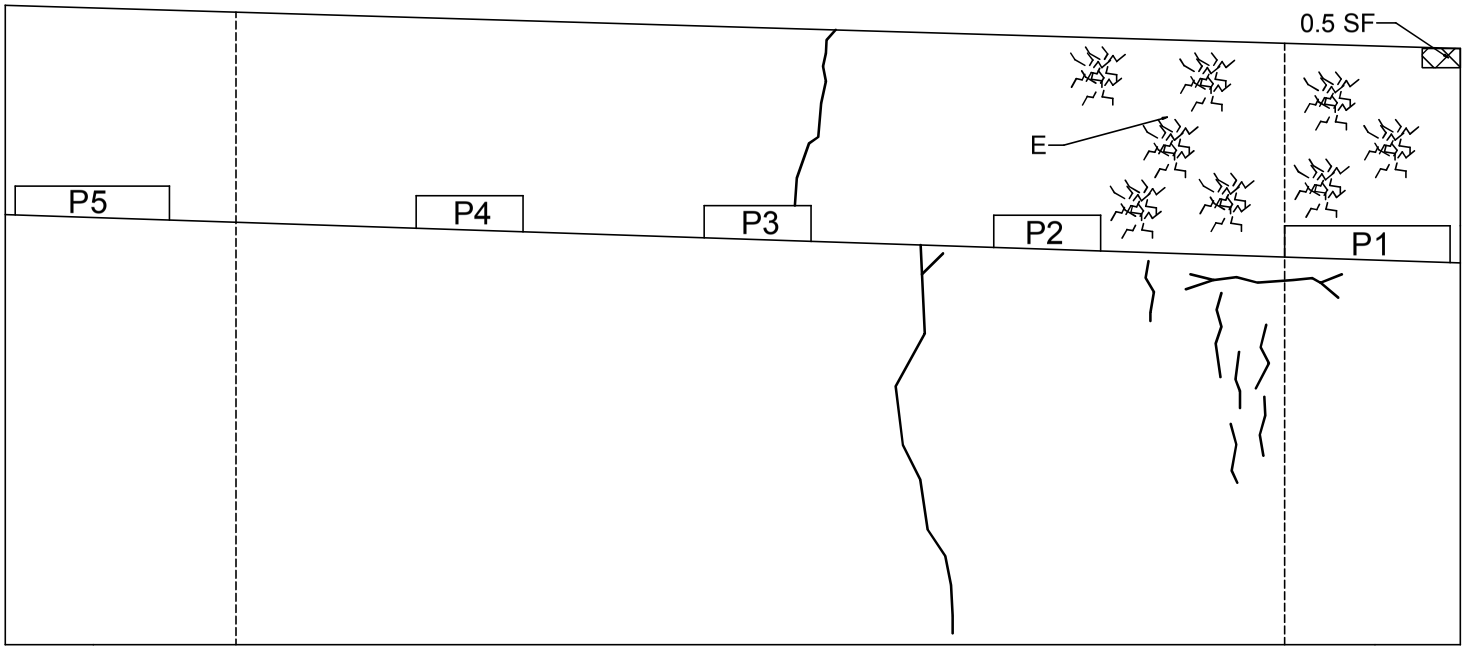

ELEVATION

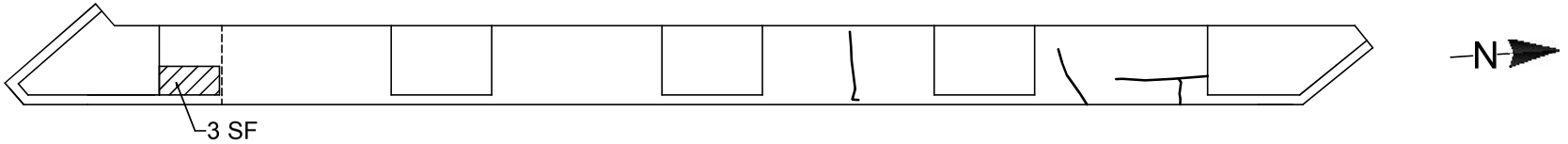

PLAN

LEGEND

E	Efflorescence	Crack	
	Hollow Concrete		Spall
	Mapcracking		

BIN: 1093510
I690 EB RAMP (FUTURE) /
I481 SB

END ABUTMENT DETERIORATION SKETCH

NOT TO SCALE

DATE: 01/23/2014

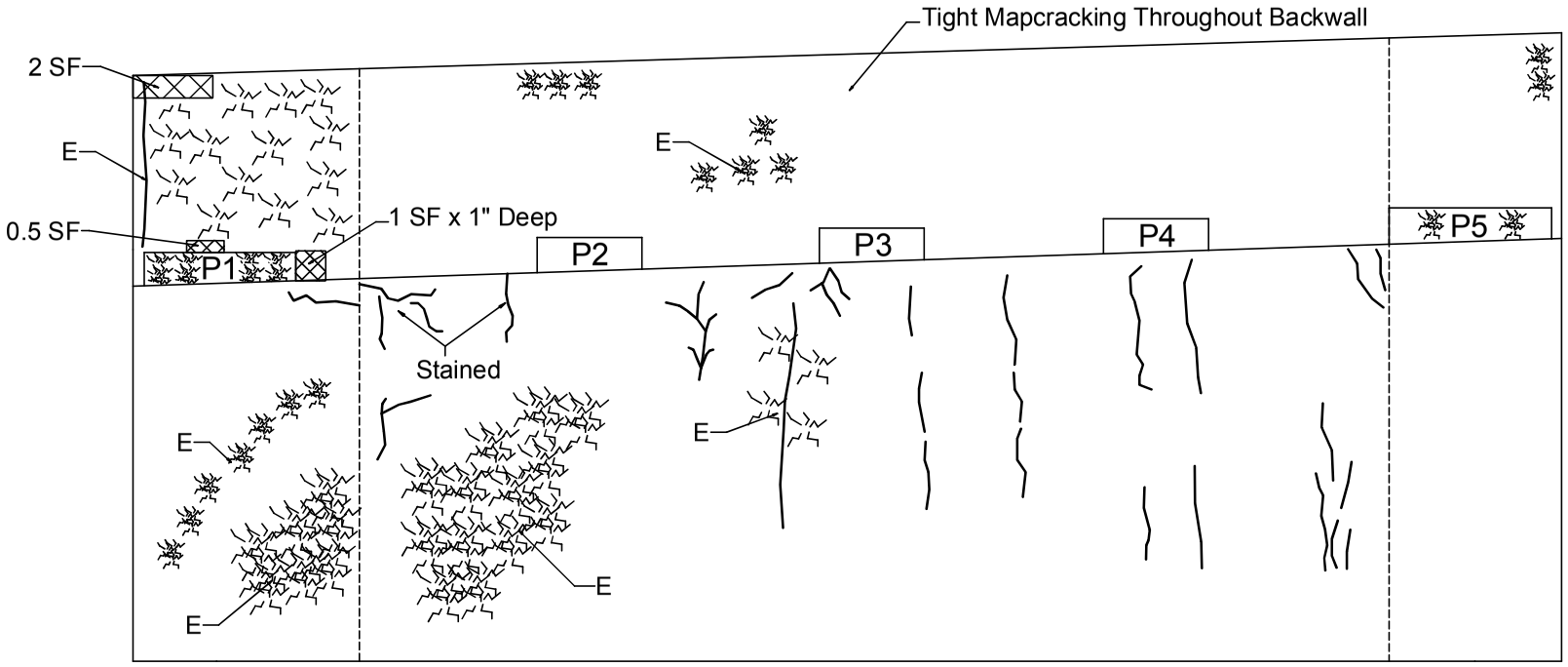

ELEVATION

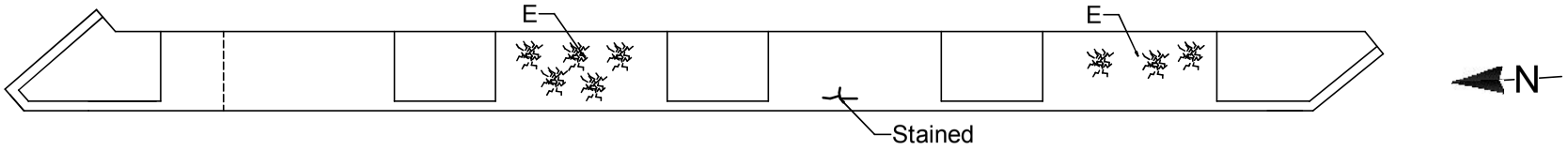

PLAN

LEGEND

E	Efflorescence		Crack
	Mapcracking		Spall

BIN: 1093510
I690 EB RAMP (FUTURE) /
I481 SB

TOP OF DECK DETERIORATION SKETCH

NOT TO SCALE

DATE: 01/23/2014

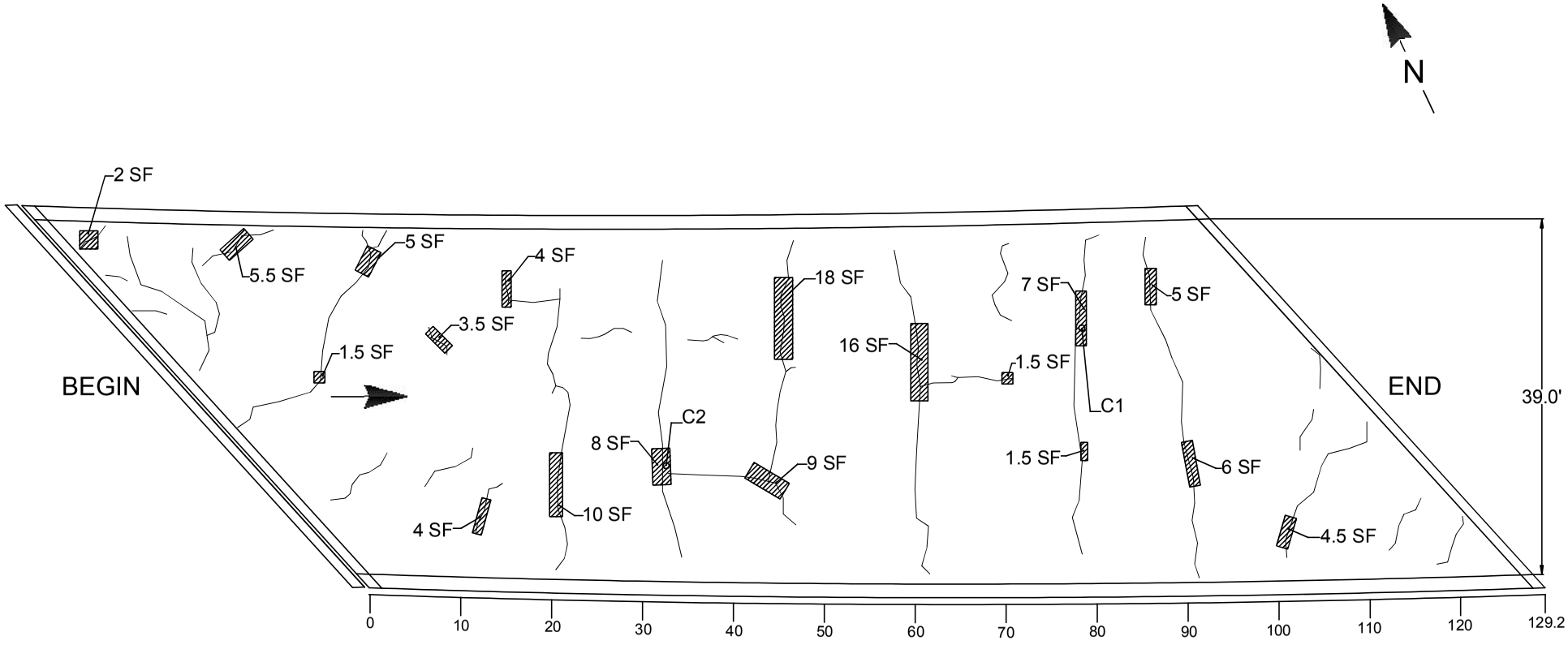

TOTAL DAMAGED AREA EQUALS 112 SF WHICH IS 2.2% OF DECK SURFACE

LEGEND
Crack
Hollow Concrete
Coring Location

BIN: 1093510
I690 EB RAMP (FUTURE) /
I481 SB

UNDERSIDE OF DECK DETERIORATION SKETCH

NOT TO SCALE

DATE: 01/23/2014

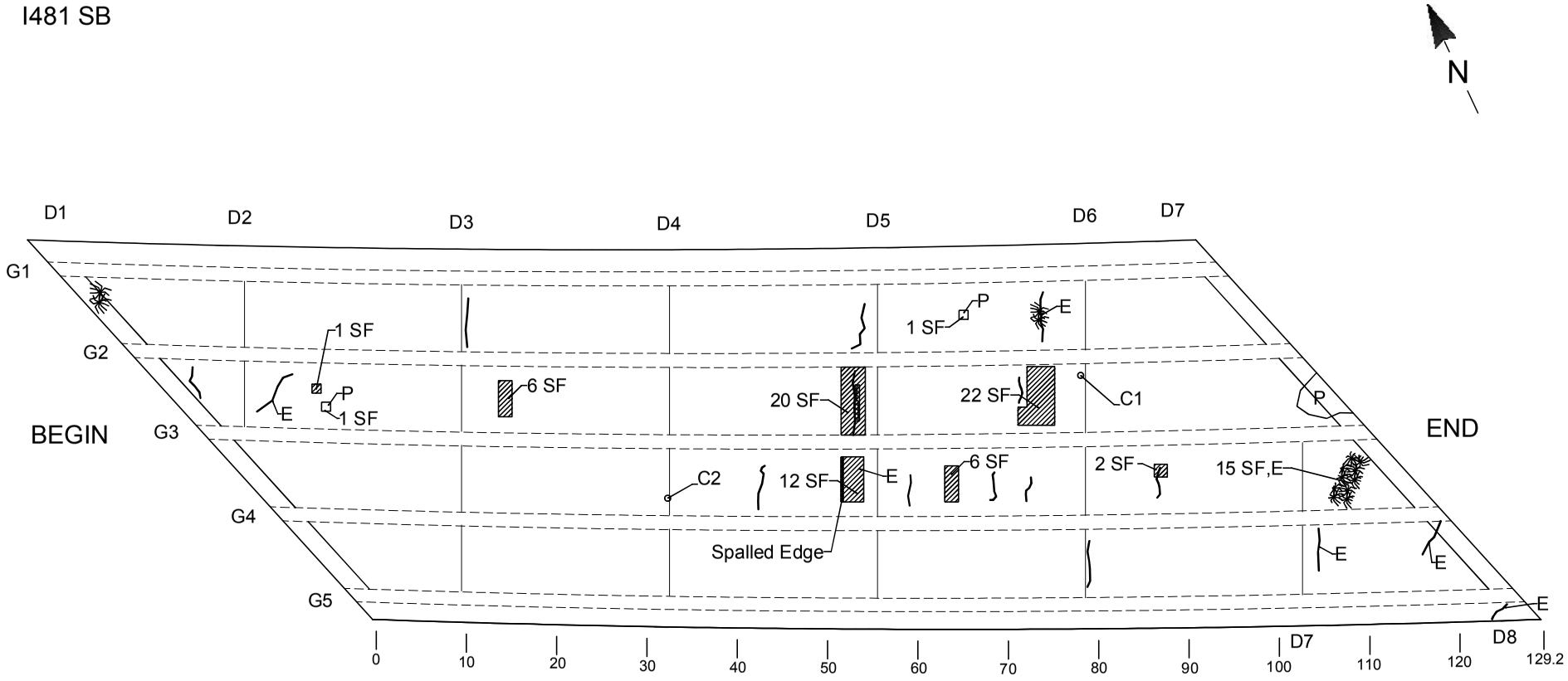

TOTAL DAMAGED AREA EQUALS 84 SF WHICH IS 1.5% OF DECK SURFACE

LEGEND

Mapcracking		P	Patch
E	Efflorescence	D	Damp
Hollow Concrete			Crack
Spalling with Exposed Bars			Coring Location

IN-DEPTH PHOTO DOCUMENTATION

BIN: 1093510
I690 EB RAMP (FUTURE) /
I481 SB

IN-DEPTH INSPECTION
PHOTO LOCATION SKETCH

DATE: 01/23/2014

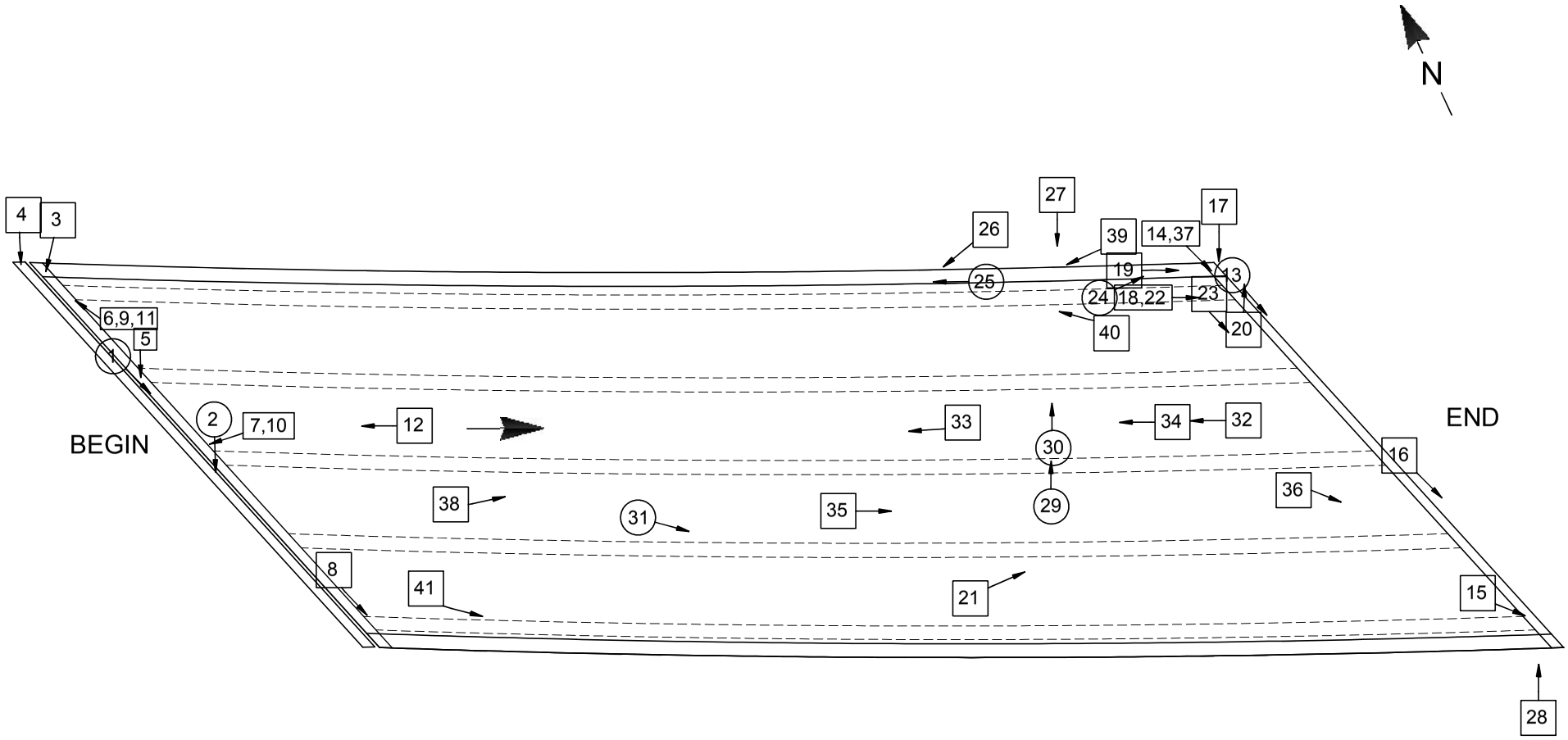

LEGEND

(XX) → Photo Above Deck

[XX] → Photo Below Deck



DESCRIPTION: BEGIN ABUTMENT JOINT WITH DECK SETTLEMENT – LOOKING FROM LEFT TO RIGHT

PHOTO 1

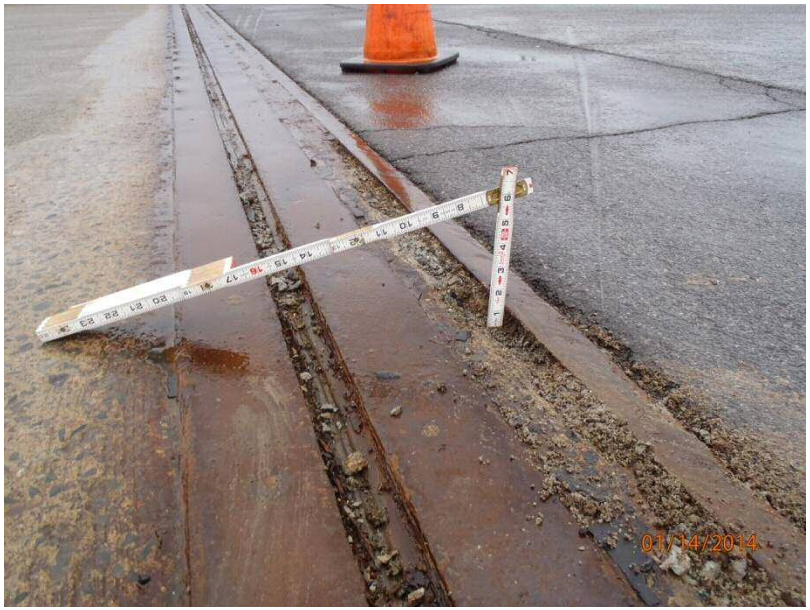

DESCRIPTION: BEGIN ABUTMENT JOINT WITH DECK RIGHT LANE – LOOKING FROM LEFT TO RIGHT

PHOTO 2



DESCRIPTION: BEGIN ABUTMENT BEARING B1 LEFT

PHOTO 3



DESCRIPTION: BEGIN ABUTMENT BEARING B1 LEFT – LOOKING FROM LEFT TO RIGHT

PHOTO 4



DESCRIPTION: BEGIN ABUTMENT BEARING B2 LEFT – LOOKING FROM LEFT TO RIGHT

PHOTO 5



DESCRIPTION: BEGIN ABUTMENT SEAT BAY 1 – LOOKING FROM RIGHT TO LEFT

PHOTO 6



DESCRIPTION: BEGIN ABUTMENT SEAT BAY 2 – LOOKING FROM END TO BEGIN

PHOTO 7



DESCRIPTION: BEGIN ABUTMENT SEAT BAY 4 RIGHT – LOOKING LEFT TO RIGHT

PHOTO 8



DESCRIPTION: BEGIN ABUTMENT BACKWALL BAY 1 – LOOKING FROM RIGHT TO LEFT

PHOTO 9



DESCRIPTION: BEGIN ABUTMENT BACKWALL BAY 2

PHOTO 10



DESCRIPTION: BEGIN ABUTMENT STEM LEFT SIDE – LOOKING FROM RIGHT TO LEFT

PHOTO 11



DESCRIPTION: BEGIN ABUTMENT STEM BAY 2 – LOOKING FROM END TO BEGIN

PHOTO 12



DESCRIPTION: END PAVEMENT JOINT – LOOKING FROM LEFT TO RIGHT

PHOTO 13



DESCRIPTION: END ABUTMENT BEARING B1 LEFT

PHOTO 14



DESCRIPTION: END ABUTMENT BEARING B5 LEFT – LOOKING FROM LEFT TO RIGHT

PHOTO 15



DESCRIPTION: END ABUTMENT SEAT BAY 3 – LOOKING FROM LEFT TO RIGHT

PHOTO 16



DESCRIPTION: END ABUTMENT PEDESTAL 1 & BACKWALL LEFT SIDE – LOOKING FROM LEFT TO RIGHT

PHOTO 17



DESCRIPTION: END ABUTMENT PEDESTAL 1 BEGIN FACE – LOOKING LEFT TO RIGHT

PHOTO 18



DESCRIPTION: END ABUTMENT BACKWALL LEFT SIDE – LOOKING FROM BEGIN TO END

PHOTO 19



DESCRIPTION: END ABUTMENT BACKWALL AT PEDESTAL 1 – RIGHT SIDE

PHOTO 20



DESCRIPTION: END ABUTMENT STEM

PHOTO 21



DESCRIPTION: END ABUTMENT STEM - LEFT SIDE

PHOTO 22



DESCRIPTION: END ABUTMENT STEM BAY 1– LOOKING FROM LEFT TO RIGHT

PHOTO 23



DESCRIPTION: DRAINAGE END LEFT – LOOKING FROM BEGIN TO END

PHOTO 24



DESCRIPTION: SAFETY WALK LEFT AT ¾ SPAN – LOOKING FROM END TO BEGIN

PHOTO 25



DESCRIPTION: FASCIA LEFT SIDE AT ¾ SPAN – LOOKING FROM END TO BEGIN

PHOTO 26



DESCRIPTION: FASCIA LEFT NEAR END – LOOKING FROM LEFT TO RIGHT

PHOTO 27



DESCRIPTION: FASCIA RIGHT AT END – LOOKING FROM RIGHT TO LEFT

PHOTO 28



DESCRIPTION: DECK AT ¾ SPAN – LOOKING FROM RIGHT TO LEFT

PHOTO 29



DESCRIPTION: DECK AT ¾ SPAN CLOSE UP – LOOKING FROM RIGHT TO LEFT

PHOTO 30



DESCRIPTION: DECK LEFT LANE NEAR 1/3 SPAN – LOOKING FROM BEGIN TO END

PHOTO 31



DESCRIPTION: DECK BAY 2 NEAR DIAPHRAGM 5 – LOOKING FROM END TO BEGIN

PHOTO 32



DESCRIPTION: DECK BAY 2 AT DIAPHRAGM 5 – LOOKING FROM END TO BEGIN

PHOTO 33



DESCRIPTION: DECK BAY 2 DIAPHRAGM BAY 5 – LOOKING FROM END TO BEGIN

PHOTO 34



DESCRIPTION: DECK BAY 3 AT DIAPHRAGM 3 – LOOKING FROM BEGIN TO END

PHOTO 35



DESCRIPTION: DECK BAY 3 AT END RIGHT – LOOKING FROM BEGIN TO END

PHOTO 36



DESCRIPTION: PRIMARY MEMBER GIRDER G1 LEFT AT END

PHOTO 37



DESCRIPTION: FRAMING – LOOKING FROM BEGIN TO END

PHOTO 38



DESCRIPTION: GIRDER G1 LEFT – LOOKING FROM END TO BEGIN

PHOTO 39



DESCRIPTION: GIRDER G1 RIGHT – LOOKING FROM END TO BEGIN

PHOTO 40



DESCRIPTION: GIRDER G5 LEFT – LOOKING FROM BEGIN TO END

PHOTO 41

DESCRIPTION:

PHOTO

ASBESTOS SAMPLING SURVEY

Asbestos Sampling Survey

Location:

BIN 1093510
NYSDOT Maintenance Ramp
over Interstate Route I-481 South Bound

Prepared for:

New York State
Department of Transportation

PIN 3056.13.111

LaBella Project No. 201001

August 2001

Table of Contents

Page

I. Project Summary 1

II. Site Description 1

III. Inspection Procedures 1

IV. Results 2

Certification 2

Figures and Table

I. Project Summary

In accordance with conditions of Term Agreement D012606, LaBella Associates, P.C. conducted an asbestos sampling survey of the NYSDOT Maintenance Road Bridge over Interstate Route I-481. Based on laboratory analyses of bulk samples collected, the following material was determined to contain asbestos:

BIN 1093510 – NYSDOT Maintenance Road over Interstate Route I-481

Type of Material	Estimated Amount
Sheet Packing	10.6 Square Meters

II. Site Description

The Site is located in Onondaga County, New York. For the purpose of this report, the Site consists of the NYSDOT Maintenance Road Bridge over Interstate Route I-481. (See attached FIGURE 1 - Site Location Map).

III. Inspection Procedures

The following procedures were used to obtain the data for this Report:

A. A review of record drawings supplied by Region 3 personnel and a visual inspection of the subject structure were conducted to identify potential visible/accessible sources of asbestos-containing materials. Observations and notes were made to provide a description of the structure, and an estimate of the approximate amount, length, or area of ACM present.

B. Physical or operational constraints, which might affect the removal of the ACM, were identified and reported.

C. Bulk samples of suspected ACM were collected during the site inspection of the subject structure. Samples were taken from each homogeneous area that may contain ACM.

D. Samples were submitted for analysis. Preliminary PLM analyses of NOB materials were performed by LaBella Laboratories, a NYSDOH approved laboratory, to determine the presence and percentage of asbestos in each sample. TEM analyses of NOB materials, if necessary, were performed by AMA Analytical, Inc.

E. Lab results were used to determine the approximate location, type, and amount of the verified ACM.

F. A drawing of the structure at the Site was created, in order to show sample locations and the approximate locations and amounts of confirmed ACM observed in accessible locations.

Only accessible areas were inspected. Inaccessible areas, such as areas within the bridge or the approaches to the bridge were not included in this inspection. No investigation was conducted by LaBella Associates to determine the presence of underground utilities on or in the immediate vicinity of the Site. Actual sample locations are shown in the attached FIGURE 2. Results of bulk sample analyses are tabulated in the attached TABLE.

IV. Results

BIN 1093510 – NYSDOT Maintenance Road over Interstate Route I-481

Sheet Packing

Asbestos-containing sheet packing is located between the tops of the abutments and the deck slab at both ends of the bridge. Most of this material is presently covered by the bridge deck, although the edges of this sheet packing are exposed and visible at various locations.

It is estimated that the total amount of this asbestos-containing sheet packing material on the bridge is approximately 10.6 square meters. This estimate is based on field measurements taken at the time of the site visit. The approximate locations of this asbestos-containing sheet packing are shown in FIGURE 2.

Certification

LaBella Associates, P.C. certifies the accuracy of this report, to the best of our knowledge, based on the information collected as described in the Inspection Procedures Section of this investigation.

Figures & Table

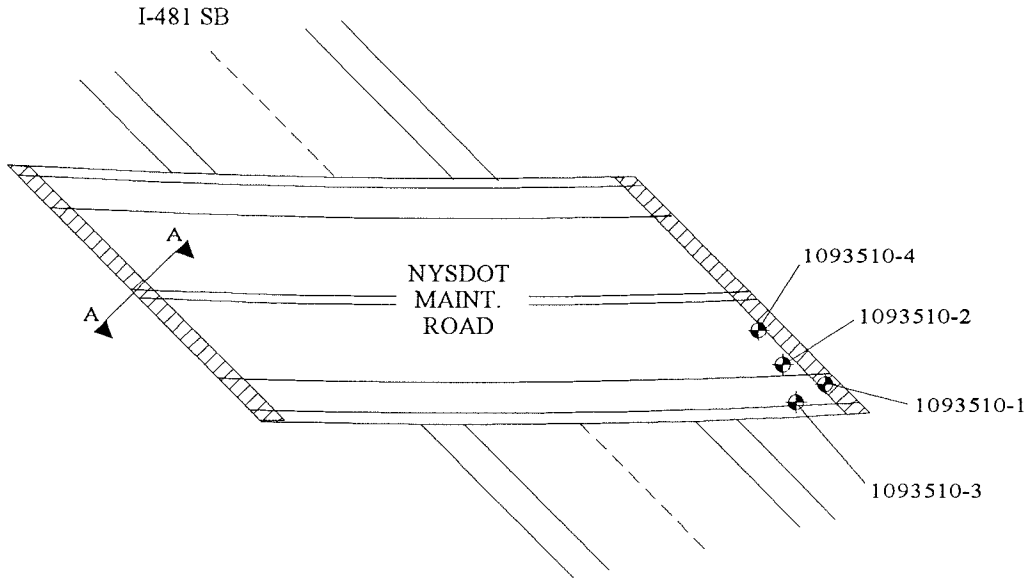

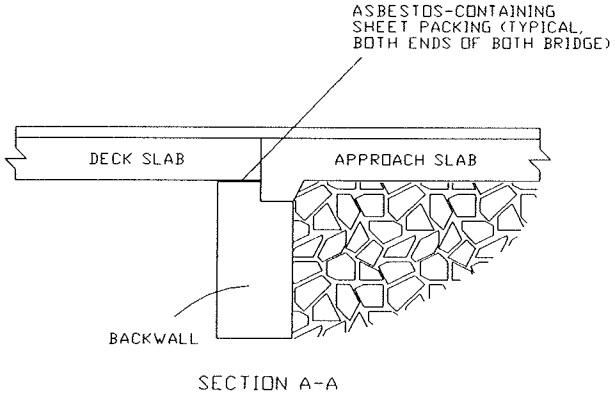

SECTION A-A

LEGEND

- 1093510-1 SAMPLE LOCATION
- ASBESTOS-CONTAINING SHEET PACKING

NORTH

PROJECT TITLE: ASBESTOS SAMPLING SURVEY
19 BRIDGES ALONG INTERSTATE I-481
ONONDAGA COUNTY, NEW YORK

PROJECT NO. 201001

PIN 3056.13.111

FIGURE TITLE: FIGURE 2 BIN 1093510
DOT MAINTENANCE RAMP OVER I-481 SB
SAMPLE LOCATIONS &
CONFIRMED ACM

NOT TO SCALE

DATE: AUGUST, 2001

Bulk Sample Results Table

Asbestos Sampling Survey
BIN 1093510
NYSDOT Maintenance Road over Interstate Route I-481
Onondaga County, New York
LaBella Project # 201001
PIN 3056.13.111

Sample #	Sample Location	Type of Material	Results % Asbestos	Amount of Material	Specification Item No.
1093510-1	**East End of Bridge Between Deck and Abutment**	**Sheet Packing**	**32% Chrysotile**	**10.6 Square Meters**	**15202.062801 M (BV-12)**
1093510-2	East End of Bridge Beneath Bearing	Bearing Pad	None Detected	N/A	N/A
1093510-3	East End of Bridge on I-Beam	Green Paint	None Detected	N/A	N/A
1093510-4	East End of Bridge on Pedestal	Gray Masonry Coating	None Detected	N/A	N/A

HUDSON ENVIRONMENTAL SERVICES, INC.
Mail: 22 Hudson Falls Rd., So. Glens Falls, NY 12803
Delivery: 211 Ferry Blvd., So. Glens Falls, NY 12803
Phone: 518/747-1060 Fax: 518/747-1062

ANALYTICAL TEST RESULTS
N.Y.S.D.O.H. LAB ID#11140
*ANALYZED BY N.Y.S.D.O.H. LAB ID#10898

CLIENT: NYSDOT

SAMPLE DESCRIPTION: See Below

MATRIX: Solid

LOCATION: BIN 1093510

H.E.S. #: See Below

DATE SAMPLED: 04/07/03

TIME SAMPLED: 11:00 AM

DATE SAMPLE RECD: 04/14/03

TYPE SAMPLE: Grab

SAMPLER: G.Cook/NYSDOT

NOB BULK MATERIAL ANALYSIS FOR ASBESTOS

HES LAB ID#: 030414J	J01	J02	J03
LAB ID#: E03	919	920	921
CLIENT: SAMPLE ID/DESCRIPTION	1093510-01 G1, 10m from beg	1093510-02 G4, 1/3 pt from beg	1093510-03 G5, 1/2 pt From beg
COLOR	Green	Green	Green
HOMOGENEOUS(YES/NO)	Yes	Yes	Yes
ORGANIC %	33	33	37
ACID-SOLUBLE INORGANICS %	12	11	11
INSOL NON-ASBESTOS INORGANIC %	55	56	52
ASBESTOS ANALYSIS			
CHRYSOTILE %			
AMOSITE %			
CROCIDOLITE %			
OTHER AMPHIBOLE %			
TOTAL ASBESTOS % (PLM)	ND	ND	ND
ASBESTOS ANALYSIS			
TYPE OF ASBESTOS			
PERCENTAGE OF ASBESTOS (TEM)	ND	ND	ND
TOTAL	100	100	100

Approval By: [signature]

Date: 4/23/03

Hudson Environmental Services, Inc. certifies that the services provided were performed in accordance with the New York State Department of Health, Environmental Laboratory Approval Program certification manual. In the event of an error, HES's sole responsibility will be to perform reanalysis at its own expense. HES, Inc. assumes no other liability for damages incurred from the interpretation or use of the analysis provided.

(OVER)

HUDSON ENVIRONMENTAL SERVICES, INC.

Mail: 22 Hudson Falls Road, South Glens Falls, NY 12803
Delivery: 211 Ferry Blvd., South Glens Falls, NY 12803
Phone: 518/747-1060 Fax: 518/747-1062

CHAIN OF CUSTODY RECORD/ Lab Work Request

Client NYS Dept. of Transportation-Region 3
Client Contact/Person # Christopher Anderson
Project Location B.I.N.
Purchase Order
HES Contact William Frawley

Mail Address NYS Dept. of Transportation
333 E. Washington Street
Syracuse, NY 13202
Phone # (315) 428-4620

HES Use Only Lab ID	Sample ID / Description	Date Collected	TIME A=a.m. P=p.m.	SAMPLE TYPE C=Composite G=Grab MATRIX	C	G	# Conts.	ANALYSIS REQUIRED
030414J001	1093510-01; G4		A/P	SO		X	1	Asbestos Bulk - NOB
	10m from BEG		A/P					
J02	1093510-02; G4		A/P	SO		X	1	" " "
	1/3 pt from BEG		A/P					
J03	1093510-03; G5		A/P	SO		X	1	" " "
	1/2 pt —		A/P					
	1/2 pt		A/P					
			A/P					

Matrix: SL - Sludge; SE - Sediment; SO - Solid; OW - Drinking Water; GW - Ground Water; SW - Surface Water; L - Leachate; A - Air; We - Wipe; DS - Drum Solids; DL - Drum Liquids; X - Other; WW - Waste Water

Special Instructions: Bridge coating - If PLM negative, TEM confirmation on all.

Sampled by: (Signature)	Date/Time 04/03/03 11:00	Received by: (Signature)	Date/Time 4/16/03 10:30A
Relinquished by: (Signature)	Date/Time	Received by: (Signature)	Date/Time
Relinquished by: (Signature)	Date/Time	Received by: (Signature)	Date/Time
Dispatched by: (Signature)	Method of Shipment:		Date/Time
Check-In Laboratory	Date/Time 4/16/03 2:00PM	Turnaround Time:	Lab Approval

WHITE - Lab Copy YELLOW - Sampler Copy PINK - Generator Copy

HES Use Only

Samples Were: 1. Shipped or Hand Delivered
2. Airbill or Chilled NOTES:
3. Received Broken/ Leaking Improperly Sealed Y N NOTES:
4. Properly Preserved NOTES: Y N
5. Received Within Holding Times Y N NOTES:

COC Tape Was: 1. Present on Outer Package Y N
2. Unbroken on Outer Package Y N
3. Present on Sample Y N
4. Unbroken on Sample NOTES: Y N

COC Record Was: 1. Present upon Receipt of Samples Y N

Discrepancies Between Sample Labels and COC Record? Y N NOTES:

Apr-18-03 11:23A Ved J. Kukreja, Ph.D. P.04

LATEST BIENNIAL INSPECTION REPORT

Inspection Date: 4/24/2013 RC: 33 BIN: 1093510

Bridge Ratings

Carried: 690I 690I33013016 Crossed: 481I 481I33012060 CheckValue: 1,802,355,070

Inspection Agency: 10 - NYSDOT Type of Inspection: 1 - BIENNIAL
GTMS: 302 -- Steel - Stringer/Multi-Beam or Girder
POSTINGS: See Gen Rec Page 1 for Postings at time of inspection.
Further Investigation Needed: No
State Highway Number: 70-7 Milepoint: 1.6 AADT/Yr: 52858 / 2002
Orientation: 4 - Southeast Political Unit: 0233 - Town of DEWITT Year Built: 1972
Total Spans: 1 Ramp Bridge Attached To Span: NA BIN: NA
General Recommendation: 6 Computed Condition Rating: 5.359

Abutment Ratings:	Beg Abut	End Abut
Joint with Deck	6	8
Bearings, Bolts, Pads	5	5
Seats and Pedestals	6	6
Backwall	6	4
Stem (Breastwall)	5	5
Erosion or Scour	6	5
Footings	9	9
Piles	8	8
Recommendation	6	5

Wingwall Ratings:	Beg Abut	End Abut
Walls	6	5
Footings	9	9
Erosion or Scour	6	6
Piles	9	8

Channel Ratings:	Channel
Stream Alignment	8
Erosion and Scour	8
Waterway Opening	8
Bank Protection	8

Approach Ratings:	Approaches
Drainage	4
Embankment	6
Settlement	6
Erosion	5
Pavement	4
Guide Railing	5

Number of Flags Issued:

RED: 0 Yellow: 0 Safety: 0

Vulnerability Reviews Recommended: 1=Yes, 2=No, 3=NA, X=NotActive

Hydraulic: 3	Overload: X	Steel: 2
Collision: 2	Concrete: X	Seismic: X

Inspector's Signature: CheckValue: 1,802,355,070 Date: 4/24/2013

Peter Riehlman,PE () (Inspector ID:3000052)

Signed copy of this inspection report is available in the appropriate NYSDOT Regional Office

Reviewed By: Date: 5/13/2013

James R. Manning,PE () (QC ID:3000023)

Signed copy of this inspection report is available in the appropriate NYSDOT Regional Office

Inspection Date: 4/24/2013 RC: 33 BIN: 1093510

Span Ratings

Carried: 690I 690I33013016 Crossed: 481I 481I33012060 CheckValue: 1,802,355,070

Deck Element Ratings:	001
Wearing Surface	5
Curbs	6
Sidewalks, Fascias	6
Railings, Parapets	5
Scuppers	8
Gratings	8
Median	8
Mono Deck Surface	6

Superstructure Ratings:	001
Structural Deck	5
Primary Members	6
Secondary Members	6
Paint	4
Joints	8
Recommendation	6

Pier Ratings:	001
Bearings, Bolts, Pads	8
Pedestals	8
Top of Cap or Beam	8
Stem Solid Pier	8
Cap Beam	8
Pier Columns	8
Footings	8
Erosion or Scour	8
Piles	8
Recommendation	8

Utility Ratings:	001
Lighting	8
Sign Structure	8
Utilities and Support	8

Field Notes:

Field Date	Arrival	Departure	Temp (C)	Temp (F)	Weather Conditions
4/23/2013	2:00:00 PM	3:00:00 PM		65	ptly. cldy.
4/24/2013	10:00:00 AM	11:00:00 AM		55	cldy.

Inspection Date: 4/24/2013 RC: 33 BIN: 1093510

Inspection Notes

Carried: 690I 690I33013016 Crossed: 481I 481I33012060 CheckValue: 1,802,355,070

Note ID: 331310935100000

Approaches: Drainage -- Rated 4, Was 4
Referenced Photos: "3"
2013 - The end left has a significant amount of asphalt, debris, and trees growing prohibiting proper drainage. The bridge slopes significantly towards this quad.

Beg. left has sand builtup with grass and there is grass buildup at all 4 quads.

Note ID: 331310935100001

Approaches: Pavement -- Rated 4, Was 4
Referenced Photos: "4"
2013 - Asphalt pavement on both approaches has several transverse, longitudinal & alligator cracks.

Note ID: 331310935100004

Span 001 -- Superstructure: Paint -- Rated 4, Was 5
Referenced Photos: "6"
2013- Bottom flanges and webs have rust spots throughtout, especially the outside bottom flanges of the fascia beams.

Note ID: 331310935100003

End Abut -- Abutment: Bearings, Bolts, Pads -- Rated 5, Was 4
Referenced Photos: "5"
2013 - The end right bearing (5) has the left anchor bolt sheared off. Other bearings OK. Raising rating to a 5.

Note ID: 331310935100002

End Abut -- Abutment: Backwall -- Rated 4, Was 4
Referenced Photos: "1", "2"
2013 - There is a minor spall at top left corner of end backwall. It measures approx. 6" deep by 12" x 12" Other areas of backwall are ok.

Inspection Date: 4/24/2013 RC: 33 BIN: 1093510

Inspection Photos in Photo Number Order

Carried: 690I 690I33013016 Crossed: 481I 481I33012060 CheckValue: 1,802,355,070

End Lt backwall



Photo Number: 1 Photo Filename: DSCN0073.jpg

End Lt backwall



Photo Number: 2 Photo Filename: DSCN0071.jpg

Inspection Date: 4/24/2013 RC: 33 BIN: 1093510

Inspection Photos in Photo Number Order

Carried: 690I 690I33013016 Crossed: 481I 481I33012060 CheckValue: 1,802,355,070

End Lt appr drainage



Photo Number: 3 Photo Filename: DSCN0076.jpg

End appr pavt

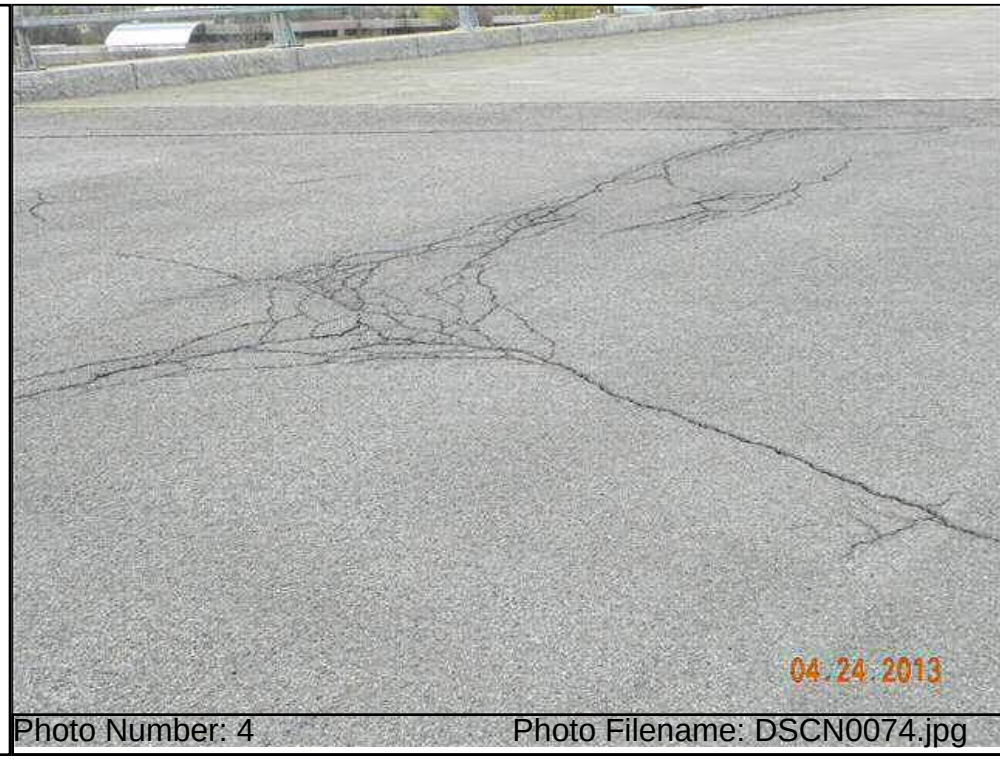

Photo Number: 4 Photo Filename: DSCN0074.jpg

Inspection Date: 4/24/2013 RC: 33 BIN: 1093510

Inspection Photos in Photo Number Order

Carried: 690I 690I33013016 Crossed: 481I 481I33012060 CheckValue: 1,802,355,070

Location:
End Brg #5



Photo Number: 5 Photo Filename: DSCN0077.jpg

End G-1 paint



Photo Number: 6 Photo Filename: DSCN0072.jpg

Inspection Date: 4/24/2013 RC: 33 BIN: 1093510

Inspection Sketches in Sketch SysID Order

Carried: 690I 690I33013016 Crossed: 481I 481I33012060 CheckValue: 1,802,355,070

Sketch ID: 331310935100000 Sketch Filename: LdRatNCL.13

General Sketch for Bridge
Referenced Photos:

Region 3 LoadRatingFieldCheckForm

NYSDOT BRIDGE INSPECTION REPORT			
SHEET	1	OF	1

LOAD RATING FIELD CHECK FORM

BIN:	1093510		Insp. Date:	04/23/2013

Dead Load - Note Changes since Last load Rating or state "NONE":

NONE

Section Loss -Note Changes since Last load Rating or state "NONE":

NONE

Additional Notes:

NONE

Attachments:

Team Leader: Peter Riehlman

Inspection Date: 4/24/2013 RC: 33 BIN: 1093510

Gen. Rec., Postings, Federal Ratings, etc.

Carried: 690I 690I33013016 Crossed: 481I 481I33012060 CheckValue: 1,802,355,070

Overall Condition:

GENERAL RECOMMENDATION: 6

Computed Condition Rating: 5.359

Problems Requiring Action:

NO Further Investigation Needed

NO Flags Issued

POSTINGS:

Inspector Confirmed existing Posting data as correct.
Posted Vertical Clearance ON the bridge is: No Posting
Posted Vertical Clearance UNDER the bridge is: No Posting
No Load Restriction is posted on this bridge

Overloads Observed:

NO Overload Vehicles were observed on this bridge

FEDERAL RATINGS:

NBI Deck Condition: 6
NBI Superstruct Condition: 6
NBI Substruct Condition: 6
NBI Channel Condition: N
NBI Culvert Condition: N

Diving Inspection Needs:

Diving Inspection Required? No Date of Last Diving Inspection: No Date

Inventory Problems:

Inventory Problems Exist? No

Miscellaneous:

Time Required to Inspect Bridge: 2 Hours

Lane Closure Needs: None Required

No Railroad Flagging Required

No Pedestrian Fence

No Snow Fence

The BIN Plate is in OK condition

Inspection Date: 4/24/2013 RC: 33 BIN: 1093510

Gen. Rec., Postings, Federal Ratings, etc.

Carried: 690I 690I33013016 Crossed: 481I 481I33012060 CheckValue: 1,802,355,070

Special Emphasis Inspection Required:

Non-Redundant/Fracture Critical Members - No
Pin and Hangers - No
Fatigue-Prone Welds - Yes
Non-Categorized Fatigue-Prone Details - No
Other (Specified in Text) - No

Special Emphasis Details:

Gusset plate welds, exempt from 100% hands-on inspection until 2015.

General Notes To the Next Inspector:

Bin plate on begin abutment.

Improvements Observed:

Inspection Date: 4/24/2013 RC: 33 BIN: 1093510

Review Progress and Personnel Present at Inspection

Carried: 690I 690I33013016 Crossed: 481I 481I33012060 CheckValue: 1,802,355,070

Inspection Submission Status:

Submitted to QC Engineer on: 5/3/2013
QC Submission Number: 353302

QC Review Completed: 5/13/2013
QC Engineer: James R. Manning

Submitted to Liaison Engineer on: 5/28/2013
Liaison Submission Number: 53304

Liaison Review Completed: 5/30/2013
Liaison Engineer: TODD M. HERMANN

Submitted for BIIS Processing on: 5/30/2013
BIIS Submission Number: .kp1

Current Status: Keypunched, Sent to BIIS
Check Value: 1,802,355,070

Personnel Present During Inspection:

Peter Riehlman - Team Leader
Rebecca Maurer - Assistant Team Leader

Inspection Date: 4/24/2013 RC: 33 BIN: 1093510

Inspection Access Requirements

Carried: 690I 690I33013016 Crossed: 481I 481I33012060 CheckValue: 1,802,355,070

Equipment Required for Inspection

Access Requirement Changes WERE Noted During This Inspection.
This Listing is from the Inspection.

ACCESS CATEGORIES FOR ENTIRE BRIDGE
Required: Walking, Extension Ladder

ACCESS CATEGORIES FOR SPAN 1
Required: Walking, Extension Ladder

Inspection Date: 4/24/2013 RC: 33 BIN: 1093510

Culvert Measurements

Carried: 690I 690I33013016 Crossed: 481I 481I33012060 CheckValue: 1,802,355,070

Culvert Measurements

NO CULVERT DATA FOR BIN 1093510

Standard Photos **RC: 33 BIN: 1093510**

Carried: 690I 690I33013016 Crossed: 481I 481I33012060

1093510_LOCATION_MAP.JPG

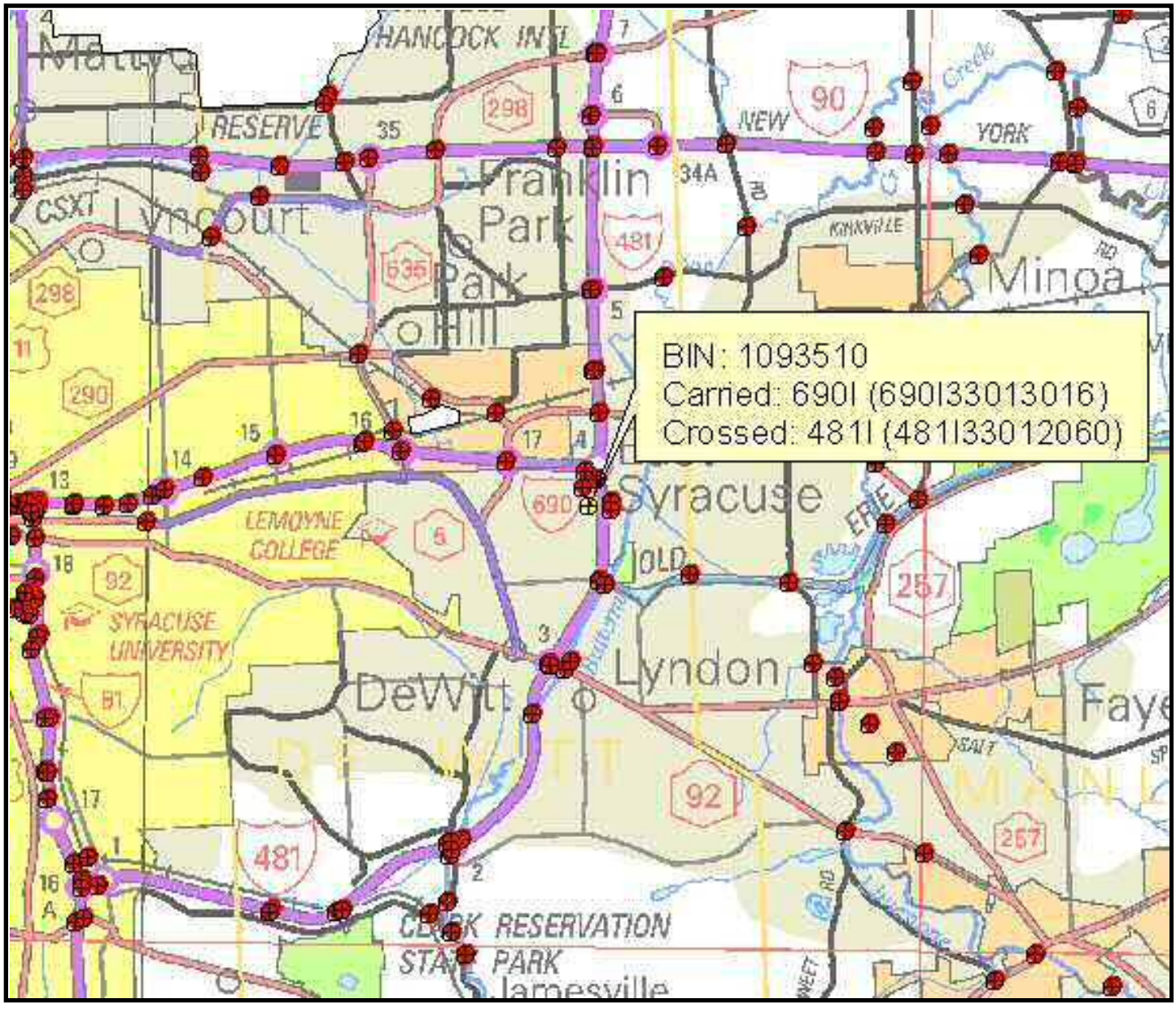

Standard Photos **RC: 33 BIN: 1093510**

Carried: 690I 690I33013016 Crossed: 481I 481I33012060

1093510_QUAD_MAP.JPG

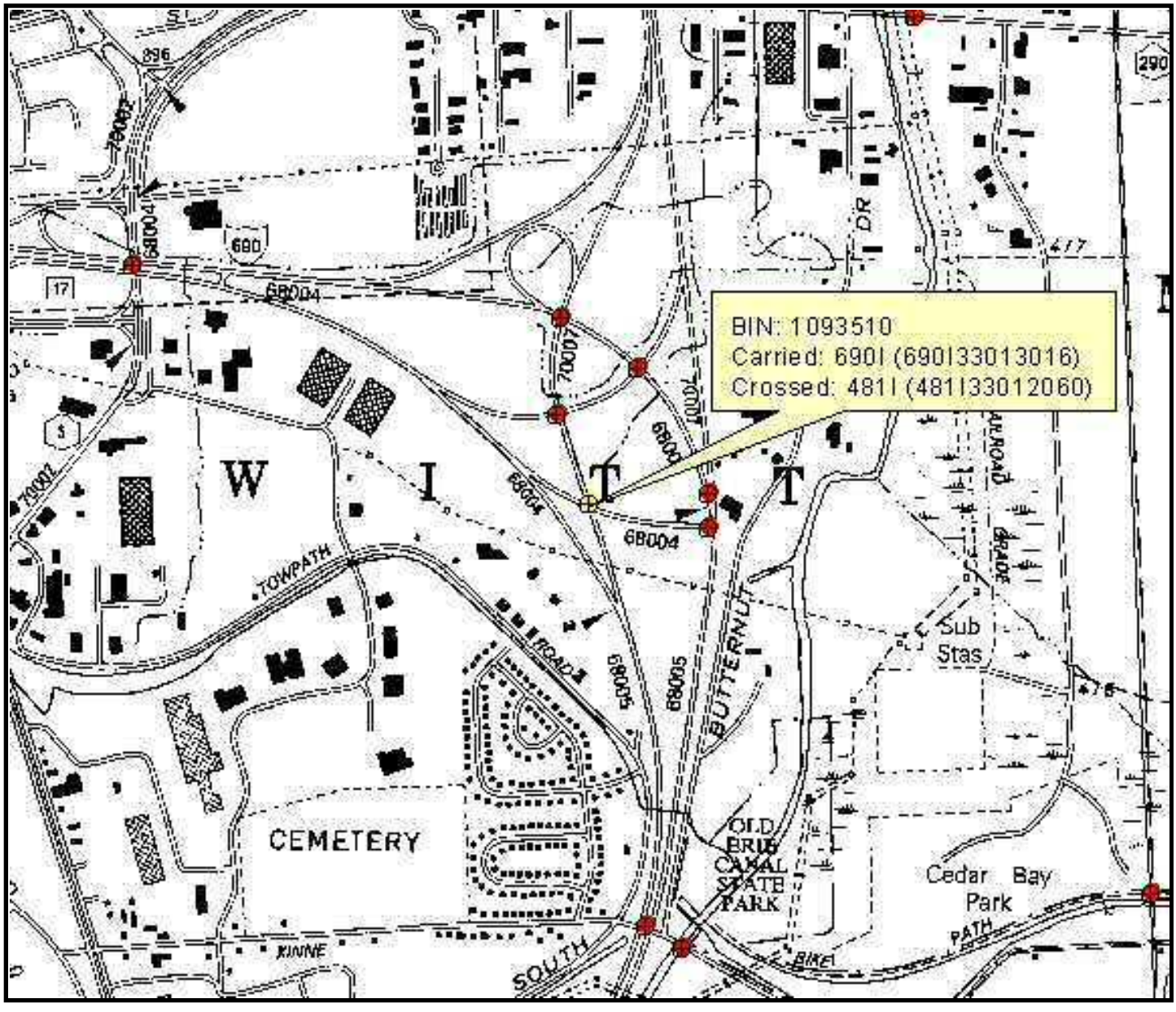

Standard Photos **RC: 33 BIN: 1093510**

Carried: 690I 690I33013016 Crossed: 481I 481I33012060

11BegAbutment.jpg



Standard Photos **RC: 33 BIN: 1093510**

Carried: 690I 690I33013016 Crossed: 481I 481I33012060

11BeginApproach.jpg



Standard Photos **RC: 33 BIN: 1093510**

Carried: 690I 690I33013016 Crossed: 481I 481I33012060

11BegRtWingwall.jpg



Standard Photos **RC: 33 BIN: 1093510**

Carried: 690I 690I33013016 Crossed: 481I 481I33012060

11EndApproach.jpg



Standard Photos **RC: 33 BIN: 1093510**

Carried: 690I 690I33013016 Crossed: 481I 481I33012060

11F2Left.jpg



Standard Photos **RC: 33 BIN: 1093510**

Carried: 690I 690I33013016 Crossed: 481I 481I33012060

11F2Right.jpg



Standard Photos **RC: 33 BIN: 1093510**

Carried: 690I 690I33013016 Crossed: 481I 481I33012060

11LtElevation.jpg

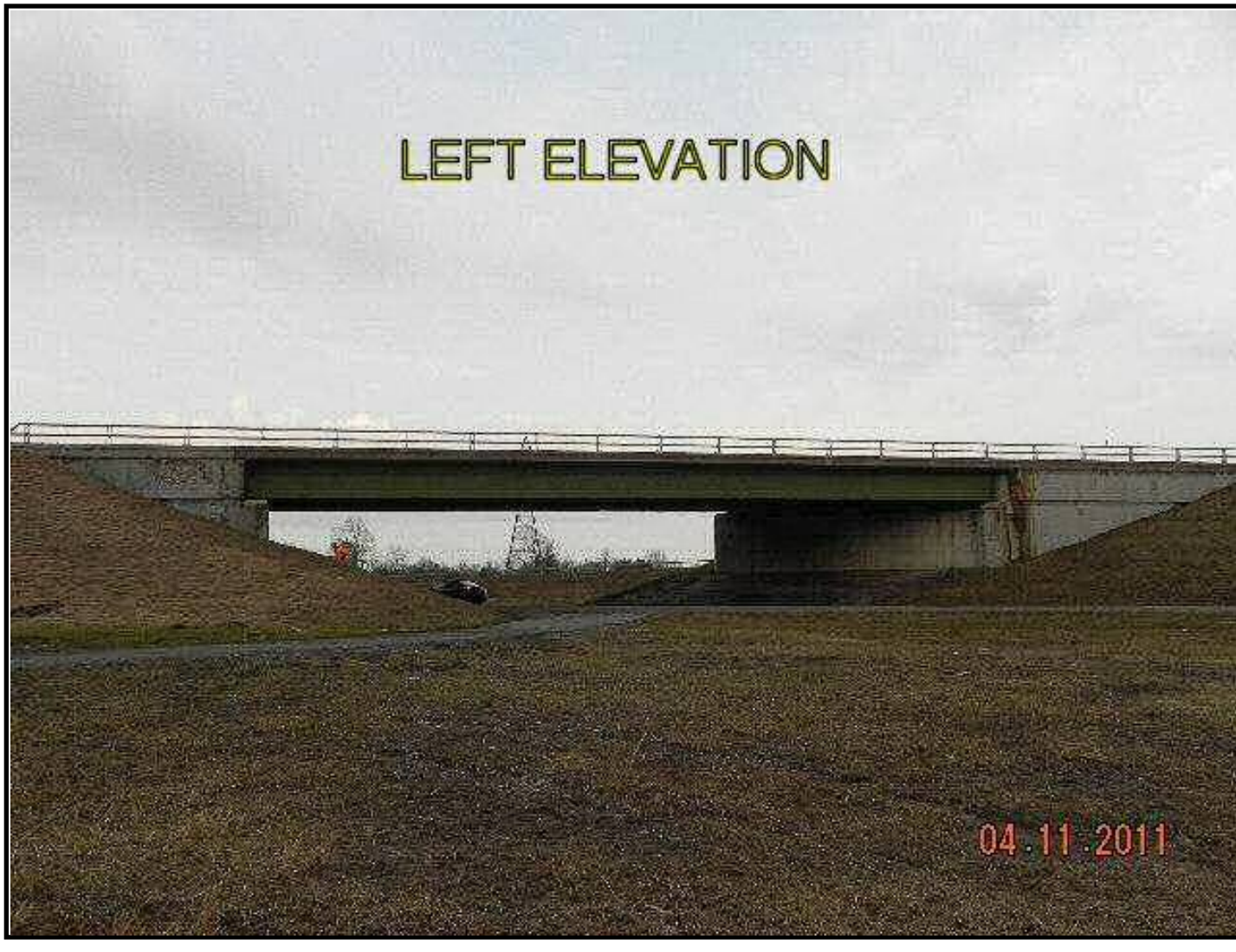

11Underside.jpg



LEVEL 1 LOAD RATING SUMMARY SHEET

Region/County Region 3/Onondaga BIN 1093510
Feature(s) Carried and Crossed I-690 EB RAMP (FUTURE)/I-481 SB
Date of field inspection upon which Level 1 rating is based 1/23/2014

OVERALL BRIDGE RATINGS (BASED ON LOWEST RATED ELEMENTS):

Total number of rating units 1

	H inventory	H operating	HS inventory	HS operating
Rating	H 38.02 (tons)	H 63.44 (tons)	HS 64.08 (tons)	HS 106.9 (tons)
Lowest rated element	Interior Girder G4	Interior Girder G4	Interior Girder G4	Interior Girder G4

Analysis method LFR Comments

Individual Rating Unit Level 1 values:

Rating unit span(s) 1

Main member ratings

	H inventory	H operating	HS inventory	HS operating
Rating	H (tons)	H (tons)	HS (tons)	HS (tons)
Lowest rated element				

Analysis method Comments

Floorbeam ratings

	H inventory	H operating	HS inventory	HS operating
Rating	H (tons)	H (tons)	HS (tons)	HS (tons)
Lowest rated element				

Analysis method Comments

Stringer ratings

	H inventory	H operating	HS inventory	HS operating
Rating	H 38.02 (tons)	H 63.44 (tons)	HS 64.08 (tons)	HS 106.9 (tons)
Lowest rated element	Interior Girder G4	Interior Girder G4	Interior Girder G4	Interior Girder G4

Analysis method LFR Comments

Certified by Date

Quality Control Engineer Signature Date
Agency or Company represented by certifier

Note:
-If connection ratings govern, record them under stringer ratings for stringer – floorbeam connection, floorbeam ratings for floorbeam-main member connections, etc.
-When Level 1 results indicated the need for load posting or other corrective action, the NYSDOT Regional Structures Engineer shall be notified immediately.
-Load ratings should be filed in the regional office within 60 days of completion of calculations.
-Bridges shall be flagged based on Level I results in accordance with the current NYSDOT flagging procedure.
-Bridge load posting, closure, etc. determinations shall be made as results are being produced.

PARSONS

100 Broadway
New York, NY 10005
Phone: 212-266-8300
Fax: 212-571-6825
www.parsons.com

TECHNICAL MEMORANDUM

FROM: Kian Siang Chau, P.E
NYSPE 082744

DATE: APRIL 3, 2014

RE: SEISMIC SCREENING SUMMARY
NEW YORK STATE DEPARTMENT OF TRANSPORTATION
D031085; PIN 3501.60; I-81

BIN: 1093510 (I-690 EB / I-481 SB)

This memorandum summarizes the seismic screening conducted for BIN 1093510 as part of the Interstate 81 Project in Syracuse, NY. The purpose of the screening is to determine if seismic retrofits are warranted at the superstructure to substructure connection, and if further seismic evaluation of the structure is required. This memorandum will give the screening results, retrofits required and recommendations for further seismic evaluation of the structure.

SCREENING PROCEDURE

The seismic screening was performed in accordance with the FHWA Seismic Retrofitting Manual for Highway Structures: Part 1 - Bridges, January 2006. As per the referenced manual, seismic screenings were performed for both lower level and upper level earthquake ground motion. The lower level earthquake ground motion has a reasonable likelihood of occurrence within the life of the bridge (50% probability of exceedance within a 75 year bridge life). The upper level earthquake ground motion has a finite likelihood of occurrence within the life of the bridge (7% probability of exceedance within a 75 year bridge life).

Values for the spectral acceleration for the Syracuse area used in the screening are as follows:

- Lower Level Earthquake Ground Motion for a Short Period (0.2 seconds): $S_S = 0.0251$
- Lower Level Earthquake Ground Motion for a Long Period (1.0 seconds): $S_1 = 0.0076$
- Upper Level Earthquake Ground Motion for a Short Period (0.2 seconds): $S_S = 0.139$
- Upper Level Earthquake Ground Motion for a Long Period (1.0 seconds): $S_1 = 0.047$

These values are considered constant and are the same for all seismic screenings of bridges in the Syracuse area.

The Site Class is based on the soil conditions at the bridge location. It was determined that this parameter has little effect on the results of the seismic screening because the spectral acceleration values for the Syracuse area are small. Based on this, a site class of D was used for all seismic screenings of bridges in the Syracuse area.

Bridge parameters used in the seismic screening were retrieved from the record drawings and WinBolts data.

The seismic screening takes into account the anticipated service life, importance, and the seismic exposure of the bridge to determine a seismic retrofit category (SRC). The SRC is then used to determine seismic evaluation methods and retrofit measures. There are four SRCs, A through D. Seismic retrofit category A is the lowest category; bridges in this category do not require retrofits or further seismic evaluation. Seismic retrofit category D is the highest category; bridges in this category requiring the most rigorous seismic evaluations and retrofits.

SCREENING RESULTS

The SRC for the bridge is "**C**" for lower level earthquake ground motion and "**B**" for upper level earthquake ground motion.

RETROFITS REQUIRED

No seismic retrofits are required for the bridge superstructure to substructure connection.

RECOMMENDATIONS FOR FURTHER SEISMIC EVALUATION

No further seismic evaluation is required for lower level earthquake ground motion. For the upper level earthquake ground motion, it is recommended that the capacities of the bearings are checked as per Section 5.2 of the referenced manual.

Retrofit cost estimates will be provided after any further required seismic evaluations are completed.

BRIDGE DECK EVALUATION REPORT

RECOMMENDATIONS

The bridge deck inspection findings and evaluation are used as a tool for developing the scope of work and cost estimates for the development and comparison of alternatives for the overall project.

The total damaged area of the deck is 2.2% of the top and 1.5% of the underside of the deck area. The cores indicate the reinforcement steel is 4.5 inches to 5.0 inches below the surface of the deck. The lab test indicate that chloride ion concentrations at all the sample locations are significantly higher than the corrosion threshold for steel.

Due to the age, condition and high chloride ion content of the bridge deck concrete, the bridge deck should be rehabilitated or replaced to meet the current standards and to mitigate excessive future maintenance costs.

ALTERNATIVES

- Rehabilitation Alternative - 2 inches Bonded Concrete Overlay
  - Scope

    The scope of this alternative will include the complete removal of the bridge railings, curb and safety walks, and fascias to the level of the original top of the deck. The lower portion of the fascia or deck soffit is in better condition and only partial removal of damaged areas is necessary. The joint will be removed. The top 2 inches of the entire deck will be removed and areas of deteriorated concrete must be removed to at least 1 inch below the level of the reinforcement steel and to the horizontal and vertical limit of any detectable hollow areas. Damaged areas at the underside of the deck will require full depth reconstruction. Any corrosion of the reinforcement steel will be sandblasted or hydro-blasted. Reinforcement with significant section loss will be replaced. Partial and full depth removal areas will be reconstructed to adjacent grade. The proposed deck overlay will be a 2 inches thick bonded concrete overlay yielding a nominal 9.5 inches standard thickness deck. A new single-sloped concrete barrier and a new armorless joint will be installed. The Level 1 Load Rating for the final condition was found to be acceptable.

- Useful Life Expectancy

  The removal of the top 2.25 inches of the existing deck will remove a portion of the deck with the high chloride ion concentrations. It can be anticipated that chloride ions will continue to migrate into the remaining deck to the reinforcing steel resulting in further corrosion-related deterioration of the deck surface. Concrete admixtures will be included in the bonded concrete overlay to impede the continued penetration of chloride into the deck from the surface. This alternative will result in an extended useful life expectancy estimated at 20 years.

The design life of the project is 30 years (ETC + 30). This alternative does not meet the project objectives of obtaining 30 years of service life and is not evaluated further.

- Rehabilitation Alternative – 100% Deep Removal and Partial Deck Reconstruction
  - Scope

    The scope of this alternative will include the complete removal of the bridge railings, curb and safety walks, and fascias to the level of the original top of the deck. The lower portion of the fascia or deck soffit is in better condition and only partial removal of damaged areas is necessary. The joint will be removed. The scope of this alternative will include partial depth reconstruction with removal of the concrete to at least 1 inch below the top mat of the reinforcement steel. Additionally, any further areas of deteriorated concrete detected will require full depth removal. Any corrosion of the reinforcement steel will be removed by sandblasting or hydro-blasting. The proposed deck partial reconstruction will be a nominal 6 inches thick concrete deck yielding a 9.5 inches standard thickness deck. A new single-sloped concrete barrier and a new armorless joint will be installed. The Level 1 Load Rating for the final condition was found to be acceptable.
  - Useful Life Expectancy

    This alternative will provide a useful life expectancy is estimated at 35 years.
  - Cost Estimate

    The estimated cost for this alternative is $505,000. The Engineer's Opinion of Probable Construction Cost worksheet is at the end of this section.

- Replacement Alternative – Cast-In-Place Concrete
  - Scope

    This scope of this alternative will include the complete demolition of the existing bridge deck, railings, curb and safety walks, fascias and bridge joint. The bridge deck will be replaced with a new 9.5 inches standard thickness concrete deck. A new single-sloped concrete barrier and a new armorless joint will be installed. The Level 1 Load Rating for the final condition was found to be acceptable.
  - Useful Life Expectancy

    This alternative will provide a useful life expectancy is estimated at 40+ years.
  - Cost Estimate

    The estimated cost for this alternative is $590,000. The Engineer's Opinion of Probable Construction Cost worksheet is at the end of this section.

- Replacement Alternative – Pre-cast Concrete Deck Panels
  - Scope

    The scope of this alternative is similar to the Cast-In-Place Concrete Deck Replacement Alternative except the deck structure will be precast panels. This alternative offers reduced construction time over conventional construction.
  - Useful Life Expectancy

    This alternative will provide a useful life expectancy is estimated at 40+ years.
  - Cost Estimate

    The comparison of accelerated construction to conventional construction is beyond the current scope of this evaluation.

IN-DEPTH INSPECTION REPORT

D031085 P.I.N. 3501.60

ELEMENT SPECIFIC BRIDGE WORK

B.I.N. 3/3 1093520

TEAM LEADER George H Stam, P.E. 056216
NYSPE LICENSE #

ASSISTANT TEAM LEADER Timothy Olmstead

FEATURE CARRIED I-690 EB RAMP TO I-481 NB

FEATURE CROSSED I-481 SB

DATE FIELD WORK BEGAN 1/21/14

DATE FIELD WORK COMPLETED 1/22/14

TABLE OF CONTENTS

- STRUCTURE IDENTIFICATION
- INTRODUCTION
- PROJECT LOCATION MAP
- IN DEPTH CONDITION DOCUMENTATION
- PLANS & SKETCHES
- IN DEPTH PHOTO DOCUMENTATION
- ASBESTOS SAMPLING SURVEY
- LATEST BIENNIAL INSPECTION REPORT

STRUCTURE IDENTIFICATION

a. Bridge Identification Number (BIN):	3/3 1093520
b. Reference Marker:	481I 3301 2061
c. Region:	NYSDOT Region 3
d. County:	Onondaga
e. Town:	Dewitt
f. Feature Carried:	I-690 EB RAMP TO I-481 NB
g. Feature Carried:	I-481 SB
h. Orientation:	Northeast

INTRODUCTION

a. Bridge History

i. Year Built:	1972
ii. Bridge Type:	Single Span, Steel Multi-girder
iii. Span Length:	124 feet
iv. Out-to-Out Width:	33 feet
v. Skew Angle:	10°
vi. Structural Ratings and Rankings	
1. Federal Sufficiency:	97 (May 2011)
2. Condition Rating:	5.063 (May 2013)
3. General Recommendation:	5 (May 2013)
vii. Live Load Posting (HS25):	No
viii. National Highway System (NHS):	Yes
ix. Previous work Done:	1987 – Replace wearing surface (asphalt concrete overlay) with concrete overlay 1992 – Clean and paint metal surfaces 2001 – Asbestos testing 2003 – Asbestos testing 2004 – Repair joints and concrete Clean and paint metal surfaces 2008 – Clean and repair joints
x. Planned Future Work:	N/A

b. Highway Classification

i. Functional Classification: Urban Principle Arterial - Interstate

ii. Traffic Volumes

YEAR	AADT
2014	13749
2034	20430
2054	30359

PROJECT LOCATION MAP

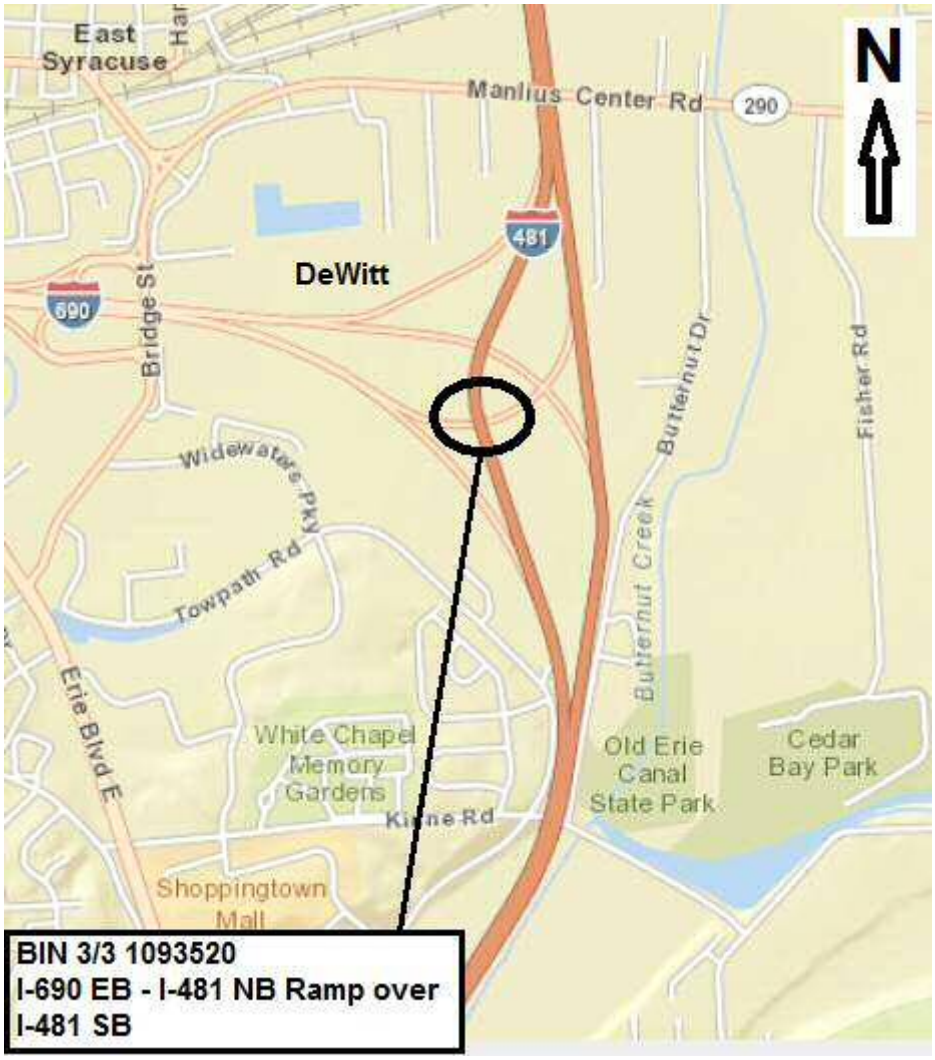

IN-DEPTH CONDITION DOCUMENTATION

NYS DEPT. OF TRANSPORTATION **SHEET: 1 OF 4**
BRIDGE INSPECTION REPORT **BIN: 1093520** **DATE: 1/21/2014 & 1/22/2014**

FEATURE CARRIED: I-690 EB RAMP TO I-481 NB **TEAM LEADER: G. STAM**
FEATURE CROSSED: I-481 SB **ASSIST. TEAM LEADER: T. OLMSTEAD**

ITEM	REMARKS	PHOTO NO.
	BEGIN ABUTMENT ITEMS	
TP 349-22	Begin Abutment - Joint with Deck: The begin bearings are fixed. The steel armor joint was removed in 2004 and there is no joint visible from the top (Photo 1). The concrete transition header is cracked at one foot intervals over most its length (Photo 2). Under the deck, the pad at the top of the backwall has "walked" and hanging down in bays 1 & 2 (Photo 3).	1,2,3
TP 349-24	Begin Abutment – Bearings: The begin bearings are fixed. The fascia bearings are rusted and movement is likely restricted (Photo 4). The interior bearings are in better condition. The left anchor bolt at bearing B5 sets up above the masonry plate by ¼ inch, is dull sounding when struck with a hammer, and is likely sheared off (Photo 5).	4,5
TP 349-26	Begin Abutment - Seat and Pedestals: Seat - The front edge of the seat is cracked 3 feet long with staining in pedestal bay 4 (Photo 6). The remainder is in good condition with no hollow areas or significant cracks detected.	6
	Pedestals - The right side of pedestal P1 is mapcracked with efflorescence (Photo 7). The lower front left corner of pedestal P4 is cracked and hollow sounding (Photo 8). The lower right corner is similar. The remaining pedestals are in good condition with no significant cracks or hollow areas detected.	7,8
TP 349-28	Begin Abutment – Backwall: There is tight mapcracking with light efflorescence throughout the backwall (Photo 9). There is leakage down the backwall at the left (Photo 10) and there is a 1 foot wide x 10 inches high x up to 6 inches deep spall at the top left backwall (Photo 11). In bay 2, there is light surface scaling with efflorescence (Photo 12). At the center of bay 3, there is a full height vertical hairline crack (Photo 13). See the Begin Abutment Deterioration Sketch.	9,10,11 12,13
TP 349-30	Begin Abutment – Stem: The stem is tight hairline cracked over approximately 80% of the surface (Photo 14). The left side is the worst area with surface scaling, staining and efflorescence (Photo 15). Also, the stem below pedestal bay 4 is mapcracked and stained (Photo 16). There are more pronounced hairline cracks scattered over the surface. See the Begin Abutment Deterioration Sketch.	14,15,16
	END ABUTMENT ITEMS	
TP 349-23	End Abutment - Joint with Deck: The end joint has armorless concrete headers with a filled elastic material seal. The concrete headers are in poor condition (Photo 17). Both headers are cracked at one foot intervals and the end side header is spalled at both shoulders. The right side is worst with spalling 5 feet long x 5 inches wide x up to 2 inches deep (Photos 17 & 18). The elastic material is in poor condition and has pulled away from the concrete header in numerous locations with several gaps up to 0.5 inch wide (Photos 18 & 19).	17,18,19

ITEM	REMARKS	PHOTO NO.
TP 349-25	End Abutment – Bearings: The end bearing are expansion. The left fascia bearing B1 has cracked and peeling paint and the sole and masonry plates are rusted (Photo 20). All of the bearings are contracted. Bearing B1 is fully contracted at -5 ºF and the slider is 0.5 inch from the edge of the bottom slide plate (Photo 21). The interior bearings are in better condition and are in their normally contracted position at -5 ºF.	20,21
TP 349-27	End Abutment - Seats and Pedestals: Seat - The seat is generally in good condition with no hollow areas detected. In bay 1, there is a cracked patch at the left side (Photo 22).	22
	Pedestals - The left side of Pedestal P1 is mapcracked (Photo 23) and the left front corner is cracked and stained (Photo 24). See the End Abutment Deterioration Sketch. The remaining pedestals are in good condition with no significant cracks or hollow areas detected.	23,24
TP 349-29	End Abutment – Backwall: There is scattered tight hairline cracking with efflorescence throughout. There is leakage down the end left backwall resulting in cracking with efflorescence and, at the top, there is a 1 foot wide x 8 inches high x up to 4 inches deep spall (Photo 25). At the left side of bay 1, there is a 1 foot wide x 4 inches high x 4 inches deep spall; and a 2 square foot area of hollow sounding and crumbling concrete, and an up to 2 inches deep spall (Photo 26). In bays 1, 2 , & 3, there is surface scaling and pocks with efflorescence over 50% of the upper half of the surface (Photo 27). See the End Abutment Deterioration Sketch.	25,26,27
TP 349-31	End Abutment – Stem: The stem is tight hairline cracked over approximately 80% of the surface, particularly at the left and right sides. The left 1/4 is the worst area with surface scaling, staining and efflorescence (Photos 28). There are more pronounced hairline cracks scattered over the stem and a full height hairline crack near the centerline (Photo 29). See the End Abutment Deterioration Sketch.	28,29
	APPROACH ITEMS	
TP 349-53	Approach - Drainage: The 2013 Biennial Inspection reported that there was gravel buildup at the end left approach pavement at the curbline that restricts runoff along the end left curbline (Photo 30). Snow cover prevented observation of that condition, however, there is evedence of seepage between the deck haunch and the top of the backwall at the left side (Photo 25).	25,30
TP 349-55	Approach - Settlement: There is no significant settlement at the begin approach. There is no significant settlement at the end approach, however, the deteriorated concrete joint header causes a bump with poor ride quality. (Photo 17).	17

ITEM	REMARKS	PHOTO NO.
TP 349-57	Approach - Pavement: At both approaches, the asphalt pavement adjacent to the bridge is transverse cracked and raveled with up to 4 inches wide x up to 2 inches deep potholes along the concrete headers. (Photos 1 & 17). The gaps at the pavement joint allow runoff to seep into the pavement and abutment backfill. There is leakage evident down the begin and end left backwalls resulting in cracking and spalling of the backwalls. (Photos 10 & 25).	1,10,17 25
	DECK ITEMS	
TP 350-19	Deck - Wearing Surface: The ride quality of the deck is smooth (Photo 31).	31
TP 350-20	Deck - Curbs: The curbs are granite in good condition. The right curb has 8.5 inches average curb reveal. The left curb reveal is 8 inches average.	
TP 350-21	Deck - Sidewalks and Fascias: Sidewalks – The right safety walk has tight mapcracking on the approximately 50% of the top surface (Photo 32). The left safety walk has light mapcracking throughout the top surface (Photo 33). No hollow sounding areas were detected.	32,33
	Fascias – The fascias have tight hairline mapcracking over 50% of the surface, primarily beneath the railing posts (Photo 34). There are scattered vertical hairline cracks (Photo 35). The vertical face of the right safety walk has several horizontal cracks with efflorescence leakage and staining (Photo 36). Also, at the begin right, there are several cracks with efflorescence in the lower deck portion of the fascia that wrap under the deck fascia bay (Photo 37).	34,35,36 37
TP 350-22	Deck - Railings: The railings are in good condition with only minor rust freckling of the galvanized surface (Photo 38). There is chain link snow fence attached to the left and right railings above I-481 SB. The fence fabric and pipe connections are in good condition.	38
	SUPERSTRUCTURE ITEMS	
TP 350-27	Structural Deck: Record plans indicate the initial structural deck is 8 inches thick concrete mono-deck. SIP forms were not used. Records indicate the deck was repaired, the surface was scarified and it received a 1.75 inch concrete overlay in 1987.	
	Top of Deck - There is scattered random cracking with hollow areas throughout (Photos 39, 40) as illustrated in the Top of Deck Deterioration Sketch. The total hollow area is 1.5% of the surface.	39,40
	Underdeck – There is widespread hairline cracking throughout the underside of the deck (Photo 41). There are scattered more pronounced cracks, some with efflorescence (Photo 42). There are scattered cracked, delaminated and hollow sounding areas (Photos 43 & 44). The deteriorated areas are illustrated on the Under Deck Deterioration Sketch.	41,42,43 44

ITEM	REMARKS	PHOTO NO.
	The total damaged area of the underside of the deck is 0.4% of the area. The more significant areas are noted below: o Bay 1 in diaphragm bay 1 – 3 square foot area of hollow sounding concrete and cracks with efflorescence (Photo 43). o Bay 1 near the end of diaphragm bay 5 – 4 square foot area of hollow sounding delaminated concrete. o Bay 2 in diaphragm bay 2 – 4 square foot area of hollow sounding concrete. o Bay 2 at diaphragm 6 – 4 square foot area of cracking and hollow sounding concrete (Photo 44). o Right fascia bay at the beg right – cracks with efflorescence (Photo 37).	43 44 37
TP 350-28	Primary Members: Good condition; surface rusting where the paint has peeled or blistered. There is no significant section loss noted (Photo 45).	45
TP 350-29	Secondary Members: Good condition; surface rusting where the paint has peeled or blistered. There is no significant section loss noted.	
TP 350-30	Paint: The paint system is failed on 10% of the surfaces of the girders and diaphragms. There is cracking and peeling of the paint on the bottom flanges and scattered locations on the girder webs (Photo 45). The tops of the outside bottom flanges are worst with 50% of the surface having blistering and peeling paint (Photos 46 & 47). Also, the outside web of the left fascia girder has scattered blistering and peeling paint (Photo 46). There is surface rusting where the paint has peeled or blistered.	45,46,47
	UTILITIES ITEMS	
TP 350-43	Lighting: None.	
TP 350-44	Sign Structure: None.	
TP 350-45	Utilities and Support: None.	
	SPECIAL EMPHASIS ITEMS Special Emphasis Inspection Required · Non-Redundant/Fracture Critical Members – No · Pin and Hangers – No · Fatigue-Prone Welds – Yes · Non-Categorized Fatigue-Prone Details – No · Other – No Special Emphasis Details · Diaphragm gusset plate welded connections to bottom flanges of all girders.	

PLANS & SKETCHES

BIN 1093520

F.I.S.H. 70-7

FED. RD. REG. NO.	STATE	FEDERAL PROJECT AID NO.	SHEET NO.	TOTAL SHEETS
1	NEW YORK	[illegible]	139	309

INTERSTATE ROUTE CONNECTION 570
BUTTERNUT INTERCHANGE (PHASE 3)
ONONDAGA COUNTY

TEAM LEADER B Parks
FIELD VERIFIED ✓
DATE 12/87

P.J.R. 10/91

Opalka 12/9/93

11/27/95

09/17/97

07/07/99

9/12/01

D.J. Hann 5/10/04

4/10/07

B Parks 4/9/08

P Reiker 5/28/08

D7/07/07

D 9/19/05

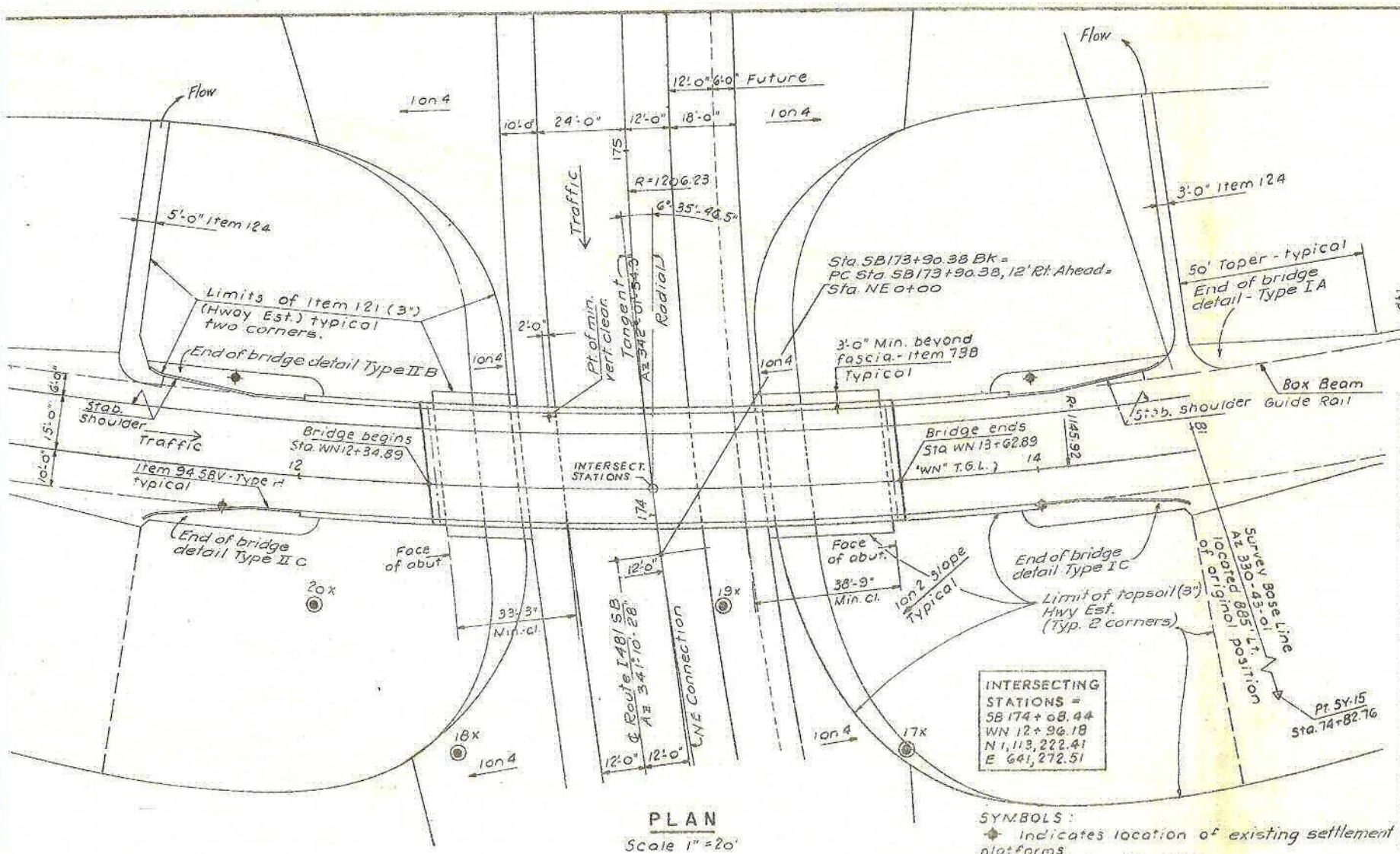

PLAN
Scale 1" = 20'

SYMBOLS:
◆ Indicates location of existing settlement platforms
Sta. WN 11+80± 10' Rt ; 25 Lf.
Sta. WN 14+00± 10' Rt ; 25 Lf.
◉ Indicates location of borings

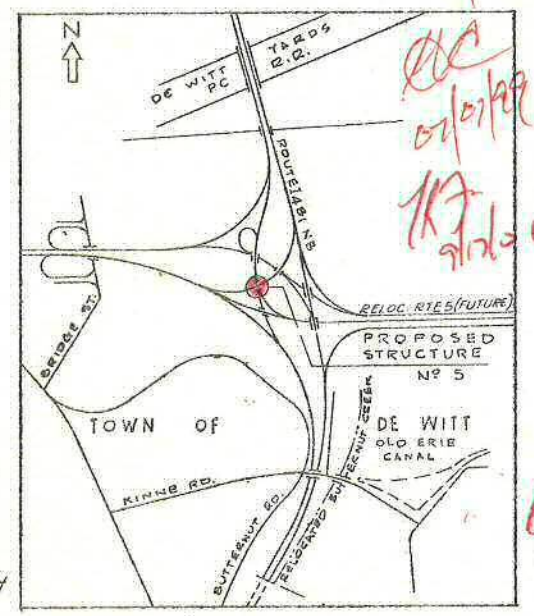

LOCATION PLAN
Scale 1:24,000

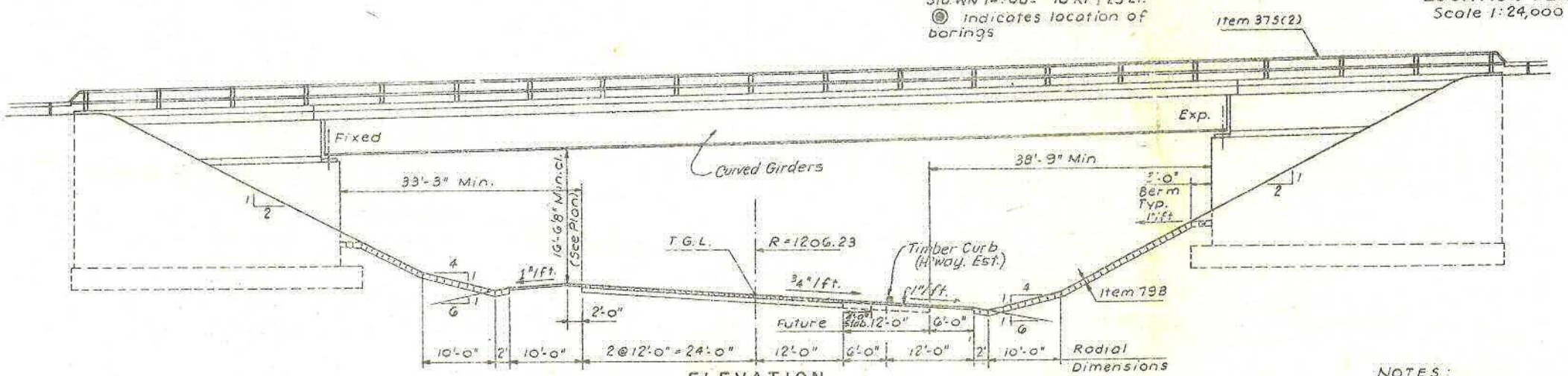

ELEVATION
Scale 1" = 10'

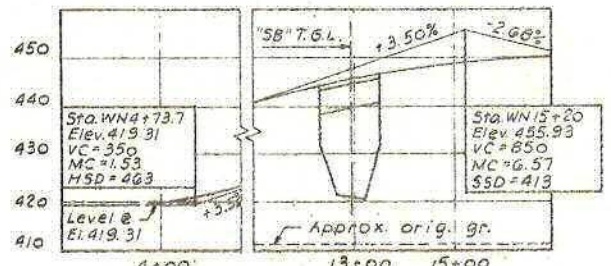

PROFILE "WN" LINE

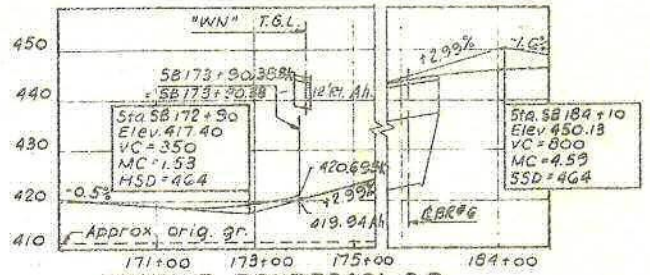

PROFILE ROUTE I 481 S.B.

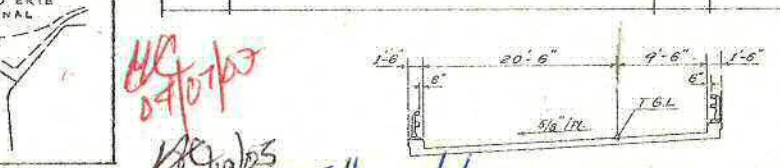

BRIDGE SECTION
Scale 1" = 10'

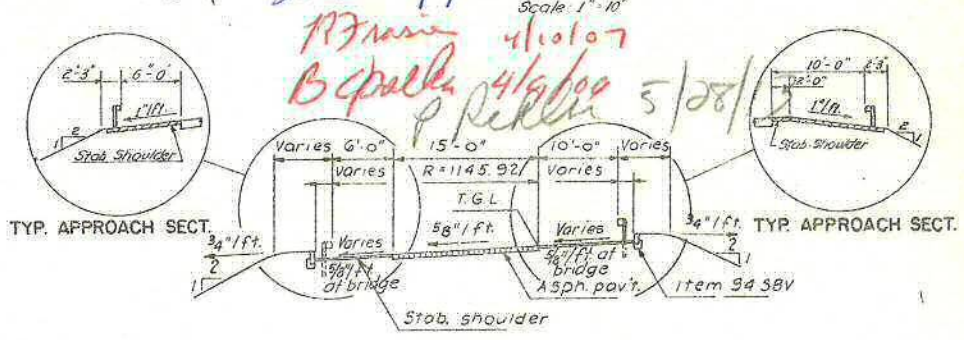

APPROACH SECTION AT BRIDGE
Scale 1" = 10'

NOTES:
1. For General Notes see Sheet No. 124
2. For design purposes the foundation pressure does not exceed 2½ tons/s.f.
Three (3) months waiting period required after completion of backfilling behind abutments and prior to setting final pedestal elevations.
Duration of required waiting period may be reduced based upon analysis of settlement platform readings. Readings at one (1) week intervals taken at the settlement platforms in the vicinity of the abutments will be required after the completion of backfill operation.
3. For Curve Data see Alignment Plan, Sheet No. 40
4. The structural slab on this structure shall be formed with removable forms.
5. For end of bridge details, see sheet No 127

ESTIMATE OF QUANTITIES

ITEM	DESCRIPTION	UNIT	QUANTITIES NEAT	QUANTITIES PROP'L
1WP5	Watering Plants and Sod	MGal.	1.7	4.0
2UF	Underdrain Filter	C.Y.	12	15
5B	Structure Excavation	C.Y.	1649	1650
11H·6	Perf. Corr. Metal Pipe Underdr. 6'dia-18ga	L.F.	203	205
18	Class A - Concrete for Structures	C.Y.	15	15
18MA	Cl A-Conc. for Struct (Mono Br. Slab)	S.F.	4181	4185
20	Class B-Concrete for Structures	C.Y.	568	570
24A	Bagged Screened Aggregate	C.Y.	99	100
28	Bar Reinforcement for Structure	Lb.	58090	58090
28B	Stud Shear Connectors	Ea.	1250	1250
29	Structural Steel	Lb.	209,935	209,935
375(2)	Steel Bridge Railing (2 Rail)	L.F.	392	395
61	Bituminous Material	Gal.	143	145
79B	Concrete Block Paving	S.Y.	267	270
83TXS	Temporary Sheet Piling	S.F.	5950	5950
945BV	Stone Curb (Bridge Types-Granite)	L.F.	555	555
124	Sodding	S.Y.	84	85
3631	Epoxy Protective Coating for Conc.	S.F.	1345	1345

1 09352 0

BUTTERNUT INTERCHANGE
F.A.I. 690 & F.A.I. 481
BRIDGE No. 5
"WN" LINE over ROUTE I 481 SB
GENERAL PLAN

DRAWING NO.	SCALE	DATE	SHEET NO.
7504-02	As Shown	8/15/70	139

LOCKWOOD, KESSLER & BARTLETT, INC.

F.I.S.H. 70-7

FED. RD. REG. NO.	STATE	FEDERAL PROJECT NO.	SHEET NO.	TOTAL SHEETS
!	NEW YORK	I-690-3(23) I-481-1(15)	140	309

INTERSTATE ROUTE CONNECTION 570
BUTTERNUT INTERCHANGE (PHASE 2)

ONONDAGA COUNTY

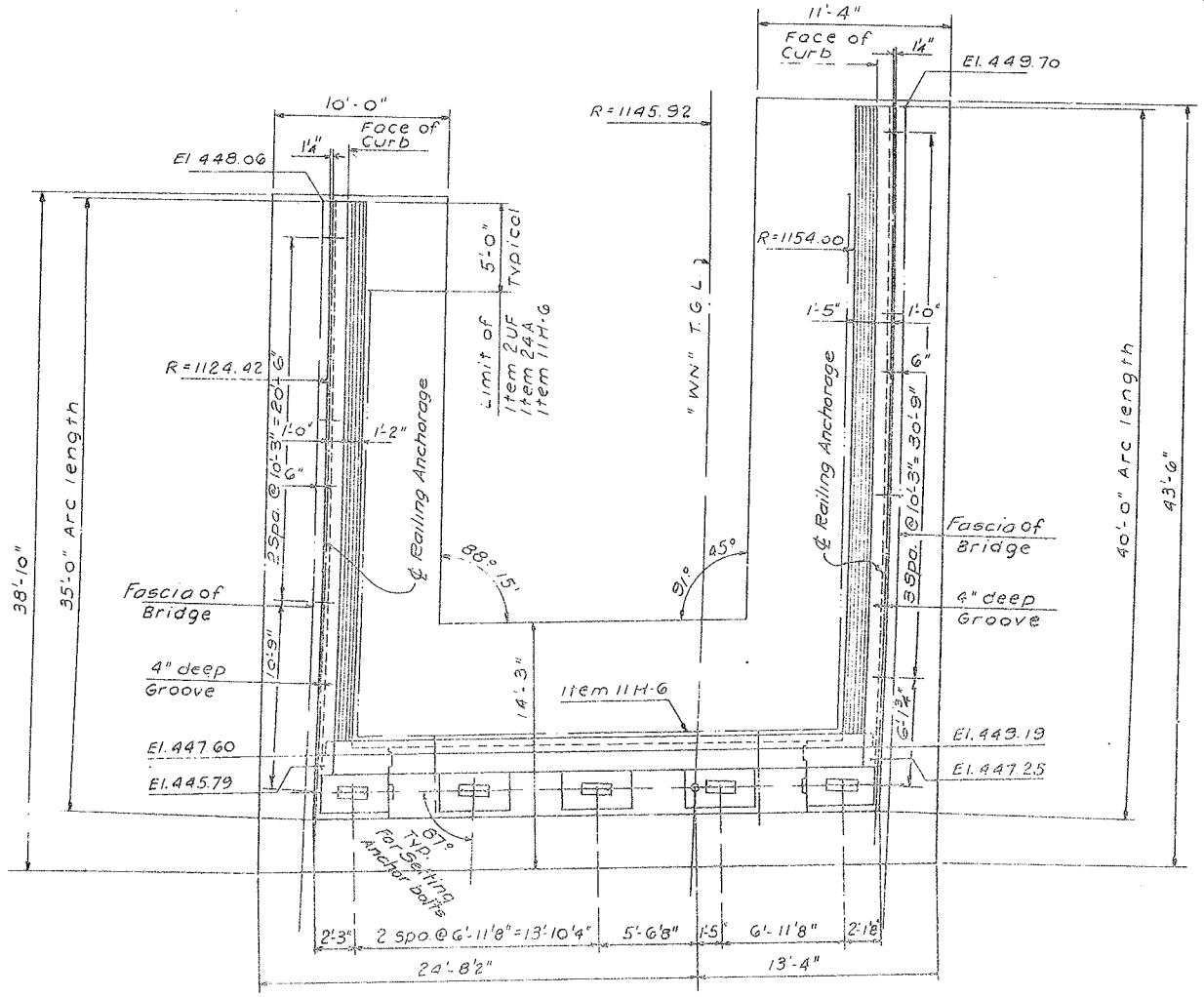

PLAN
Scale 3/16" = 1'-0"

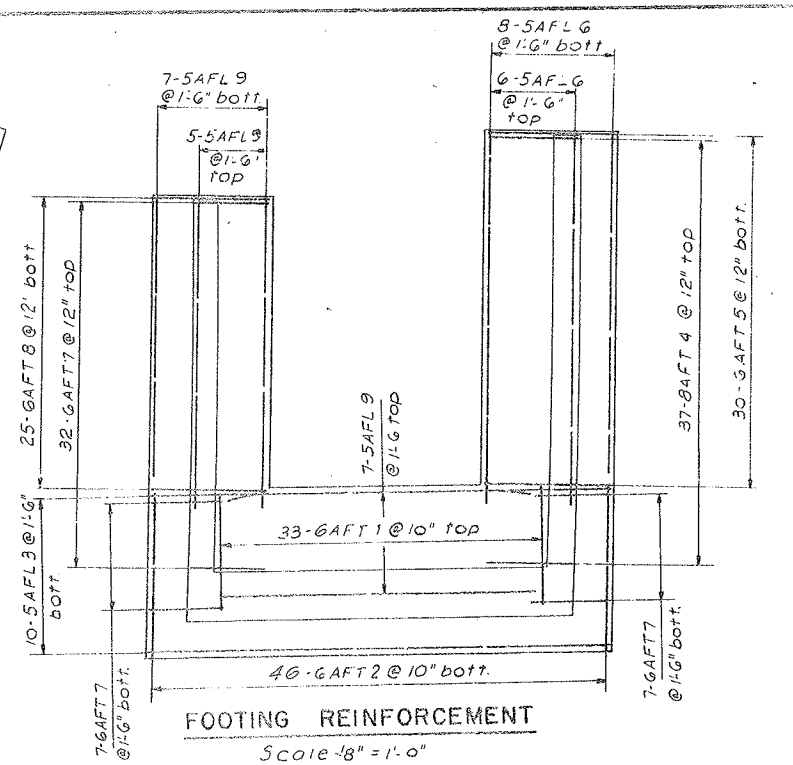

FOOTING REINFORCEMENT
Scale ⅛" = 1'-0"

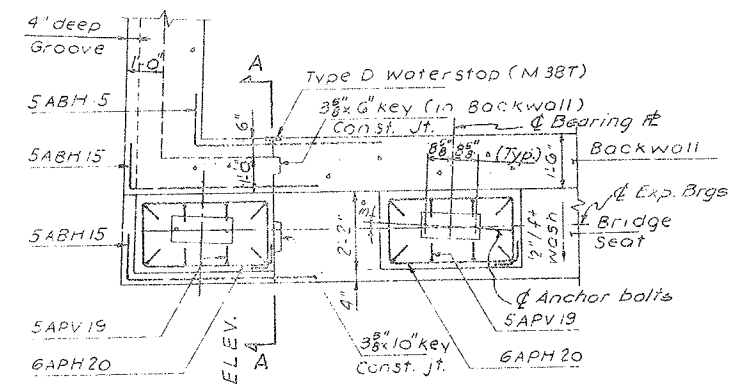

PLAN - PEDESTALS
Scale ⅜" = 1'-0"

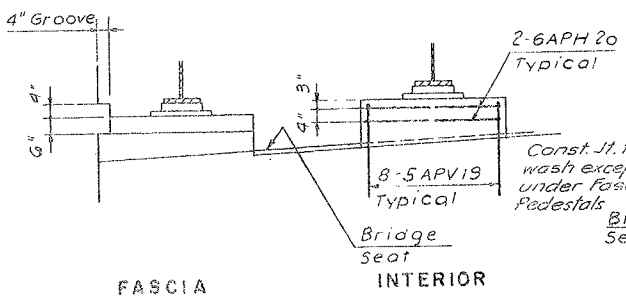

ELEVATION - PEDESTALS
Scale ⅜" = 1'-0"

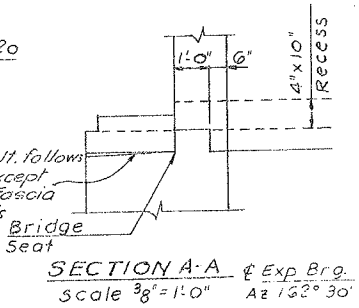

SECTION A-A ℄ Exp Brg.
Scale ⅜" = 1'-0" Az 162° 30'

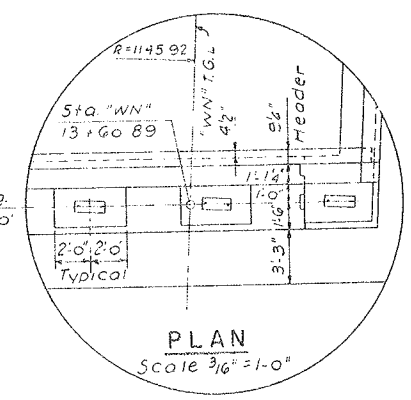

PLAN
Scale 3/16" = 1'-0"

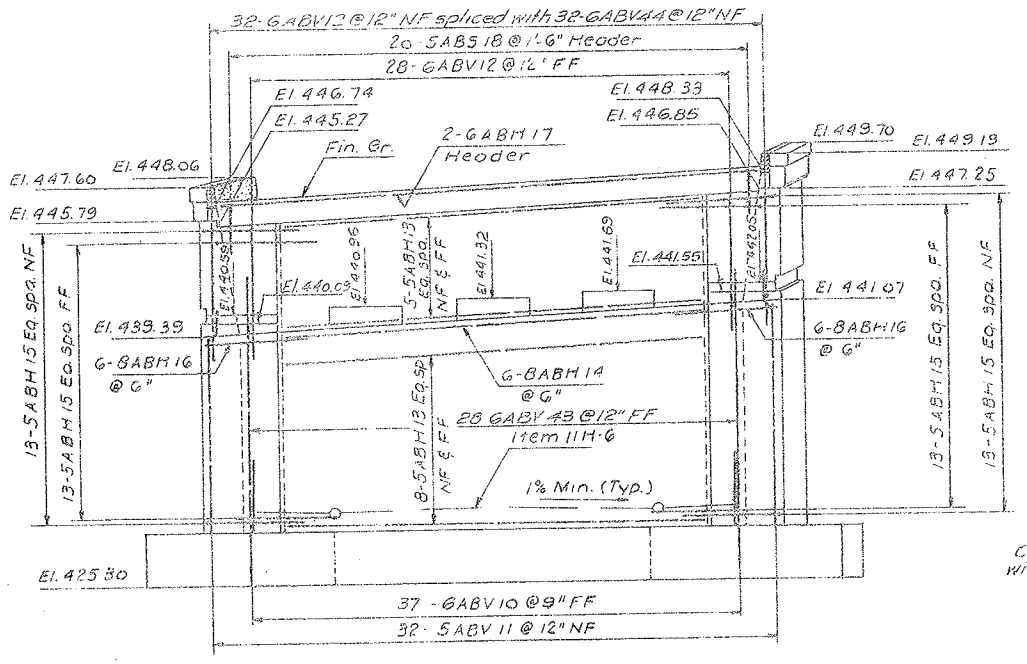

ELEVATION
Scale 3/16" = 1'-0"

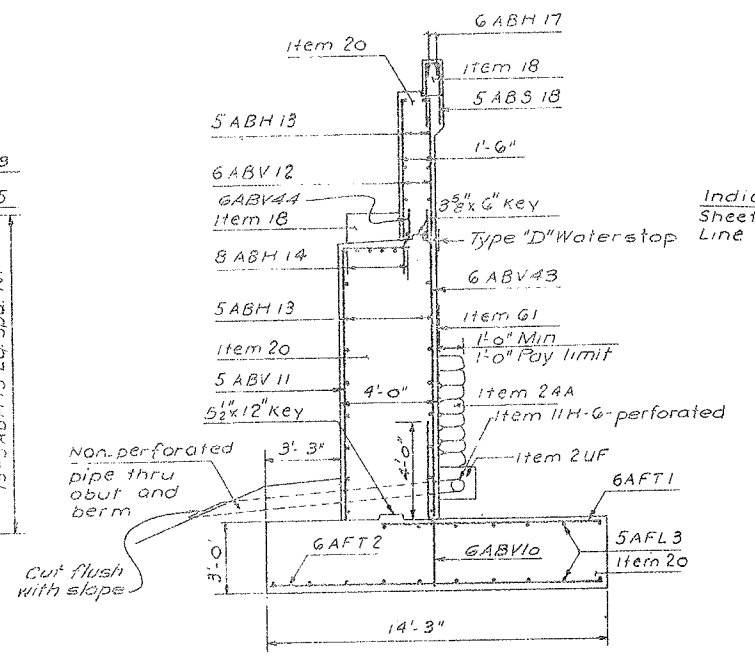

TYPICAL SECTION
Scale ¼" = 1'-0"

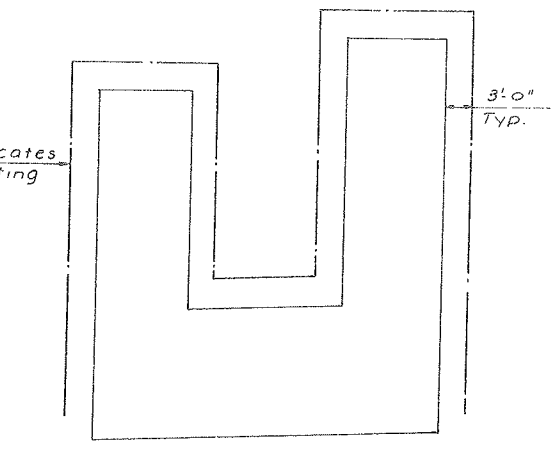

PLAN - ITEM 83 TXS
Scale 3/32" = 1'-0"

NOTES.
1. Anchor bolts for bearings shall be 1¼" ℄ roughened or swedged bolts, 1'-4½" long and set 12" into concrete.
2. For Excavation and Backfill details see Sheet No. 128
3. For Backwall and Waterstop details see Sheet No. 125
4. For Expansion Bearing detail see Sht. No. 130
5. For Roll Post spacing see Sheet No. 143

BUTTERNUT INTERCHANGE
FA I. 690 & FA I. 481

BRIDGE No. 5
"WN" LINE over ROUTE I 481 S.B.
EAST ABUTMENT

DRAWING NO.	SCALE	DATE	SHEET NO.
7504-02	As Shown	8/15/70	140

LOCKWOOD, KESSLER & BARTLETT, INC.

F.I.S.H. 70-7

FED. RD. REG. NO.	STATE	FEDERAL AID PROJECT NO.	SHEET NO.	TOTAL SHEETS
1	NEW YORK	I-690-3(28) I-481-2(116)	141	3[illegible]

INTERSTATE ROUTE CONNECTION 570
BUTTERNUT INTERCHANGE (PHASE 2)

ONONDAGA COUNTY

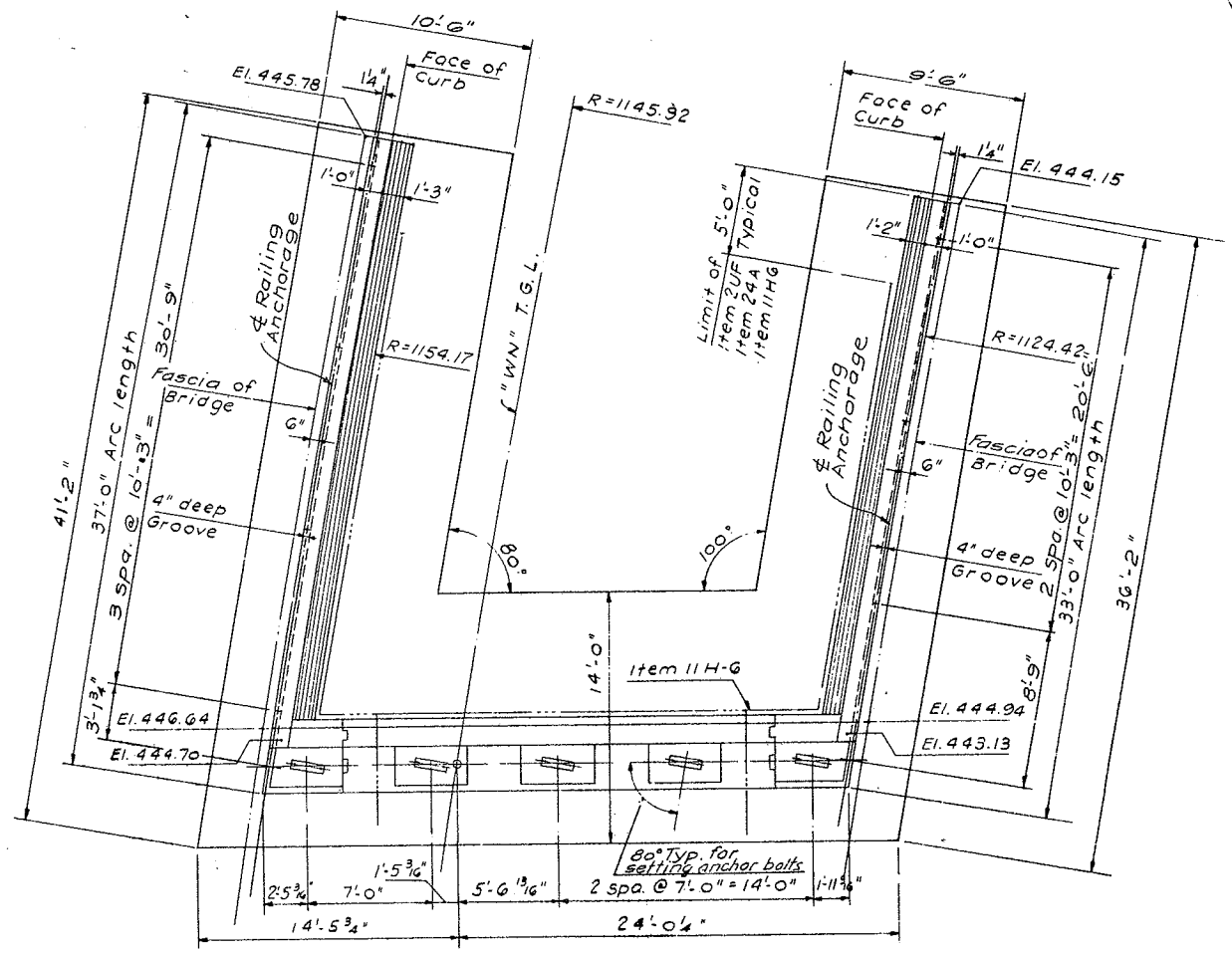

PLAN
Scale 3/16" = 1'-0"

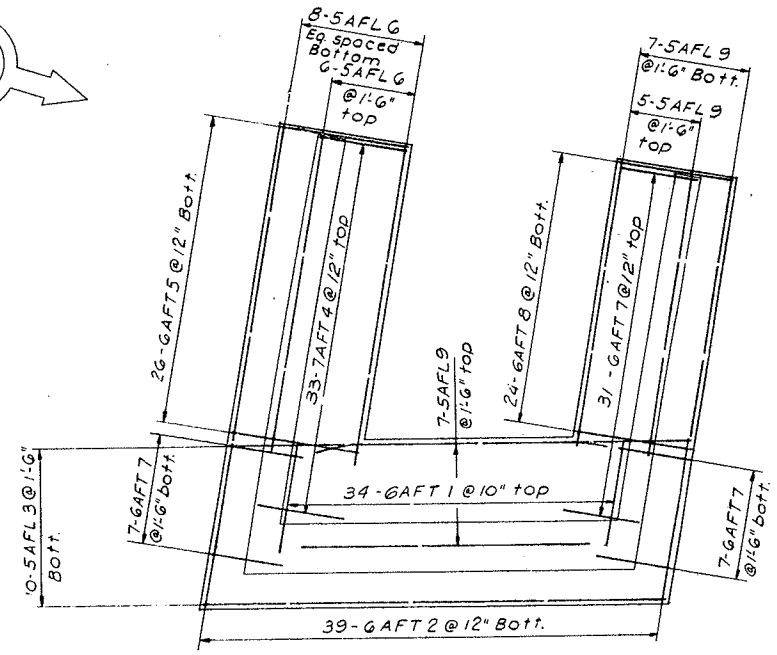

FOOTING REINFORCEMENT
Scale 1/8" = 1'-0"

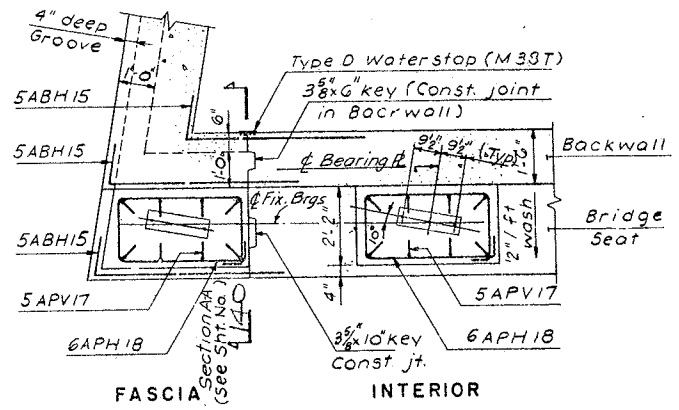

PLAN - PEDESTALS
Scale 3/8" = 1'-0"

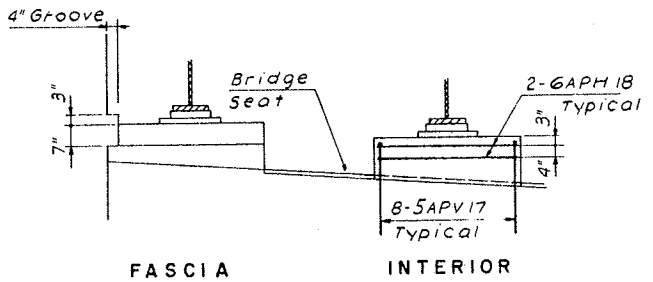

ELEVATION - PEDESTALS
Scale 3/8" = 1'-0"

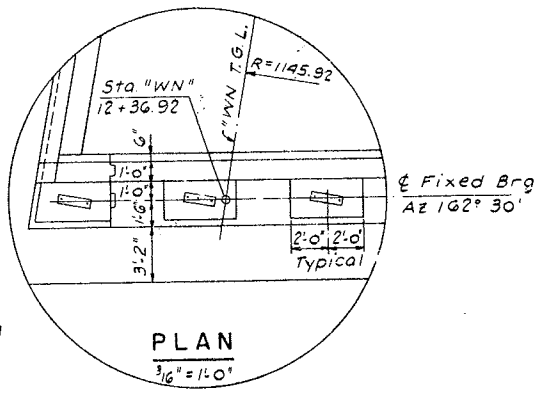

PLAN
3/16" = 1'-0"

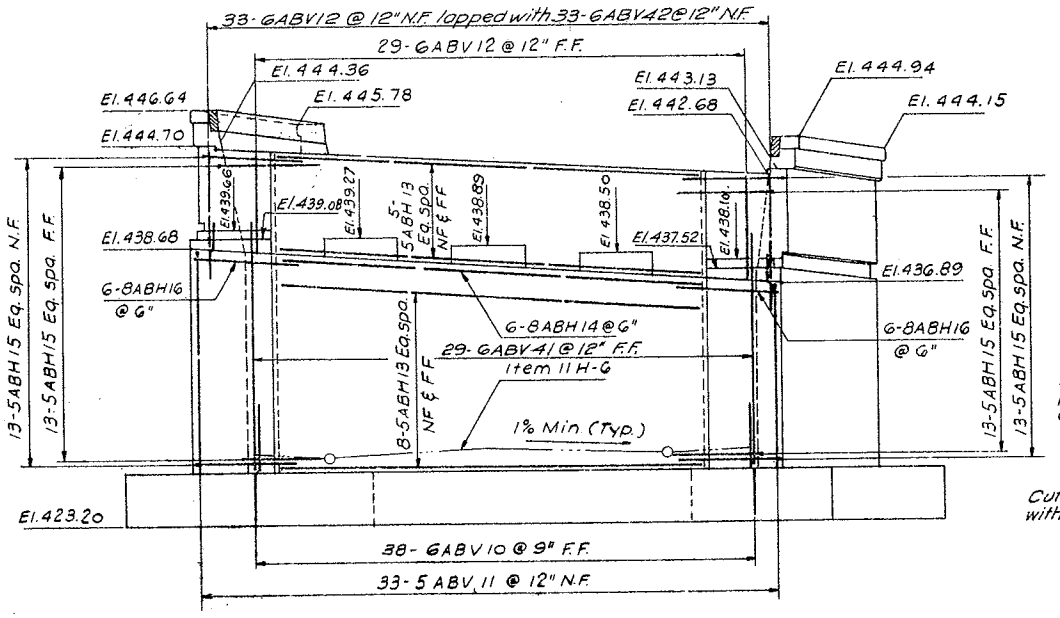

ELEVATION
Scale 3/16" = 1'-0"

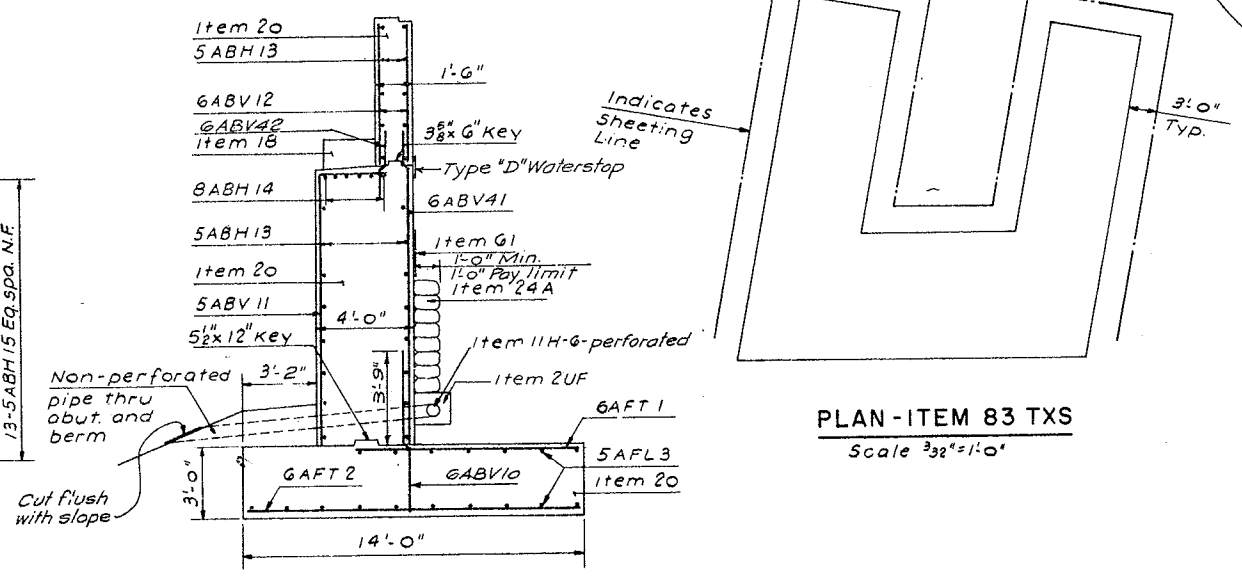

TYPICAL SECTION
Scale 1/4" = 1'-0"

PLAN - ITEM 83 TXS
Scale 3/32" = 1'-0"

NOTES:
1. Anchor bolts for Bearings shall be 1¼" ϕ roughened or swedged bolts, 1'-4" long and set 12" into concrete.
2. For Backfill and Excavation details see Sheet No. 128
3. For Backwall and Waterstop details see Sheet No. 125
4. For Fixed Bearing details see Sheet No. 1
5. For Rail Post spacing see Sheet No. 143

BUTTERNUT INTERCHANGE
F.A.I. 690 & F.A.I. 481

BRIDGE No. 5
"WN" LINE over ROUTE I-481 S.B.
WEST ABUTMENT

DRAWING NO.	SCALE	DATE	SHEET NO.
7504-02	As Shown	8/15/70	141

LOCKWOOD, KESSLER & BARTLETT, INC.
CONSULTING ENGINEERS — SYOSSET, NEW YORK

F.I.S.H. 70-7

FED. RD. REG. NO.	STATE	FEDERAL PROJECT NO.	SHEET NO.	TOTAL SHEETS
1	NEW YORK	~~I-690-3(25)~~ I-481-2(16)	142	806

INTERSTATE ROUTE CONNECTION 570
BUTTERNUT INTERCHANGE (PHASE 2)

ONONDAGA COUNTY

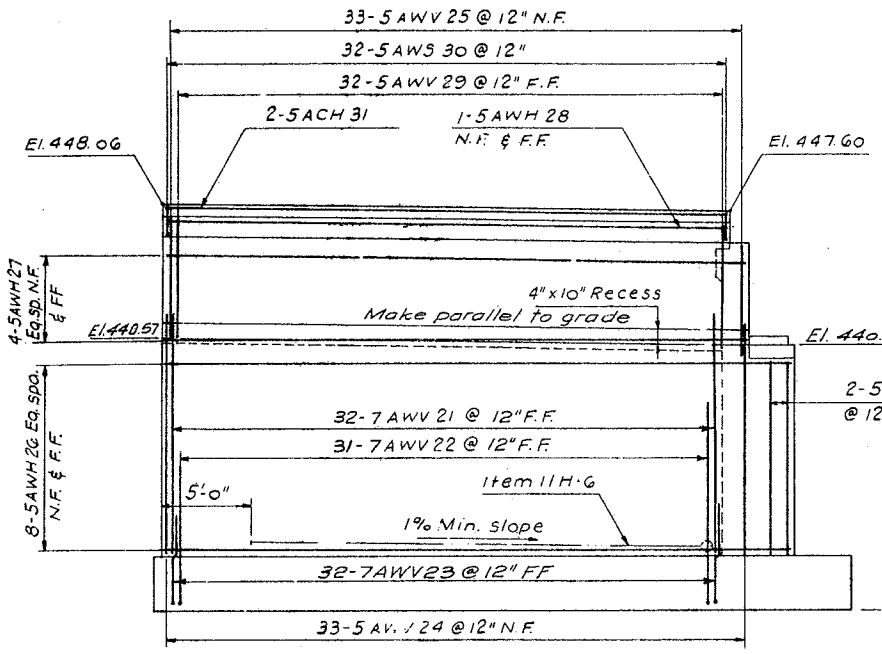

N.E. WINGWALL

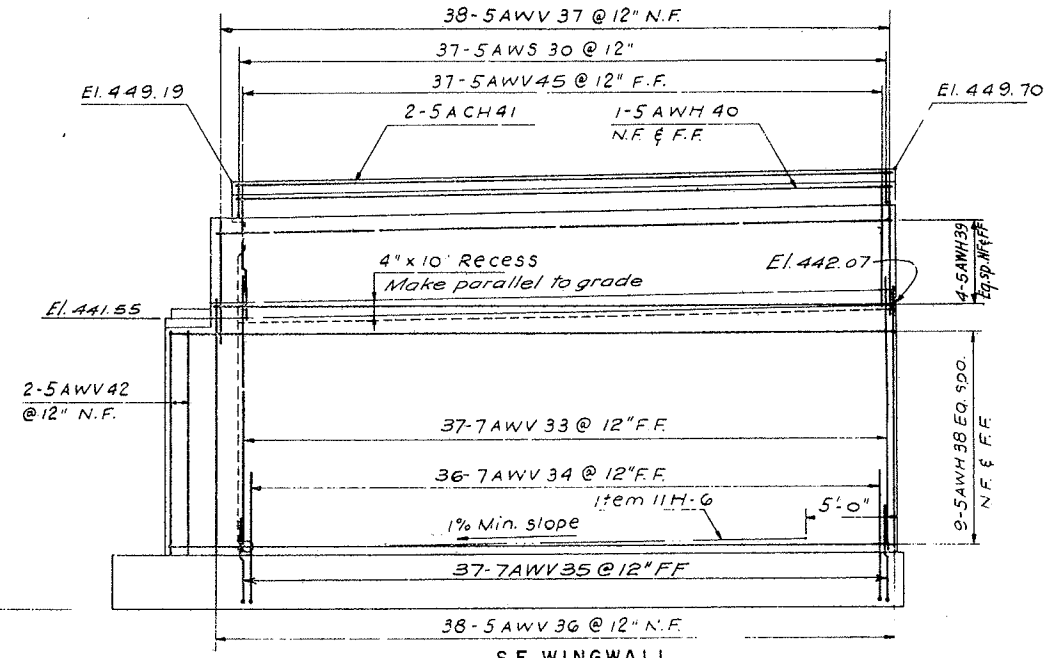

S.E. WINGWALL

EAST ABUTMENT

Scale 3/16" = 1'-0"

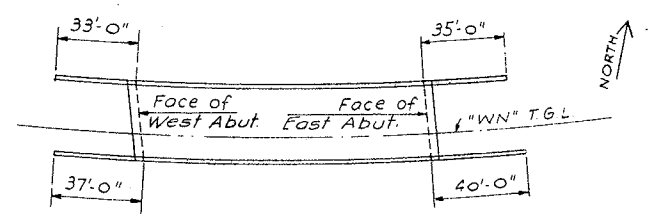

KEY PLAN

Scale 1" = 40'

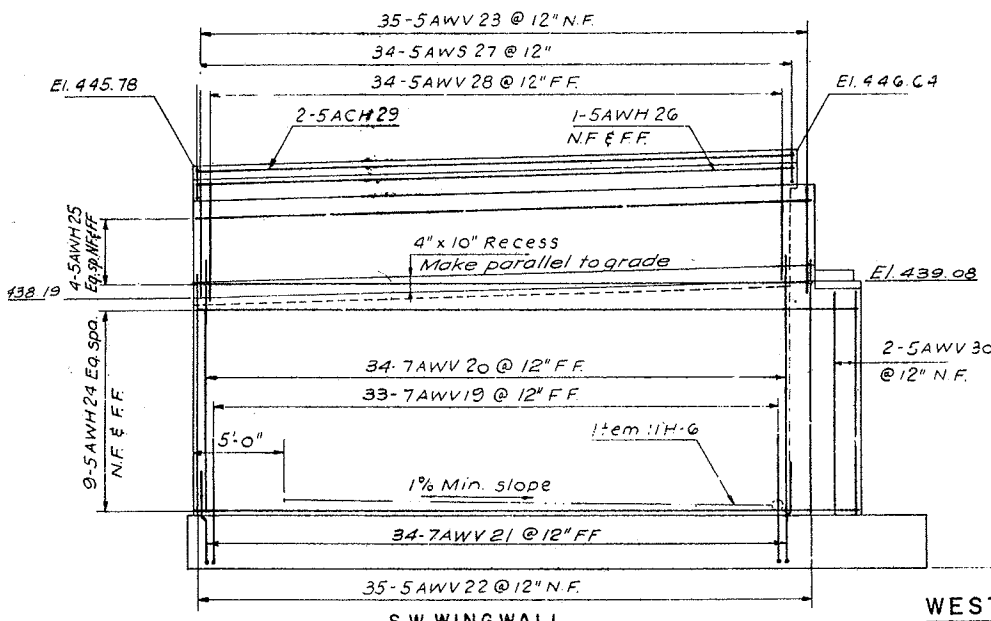

S.W. WINGWALL

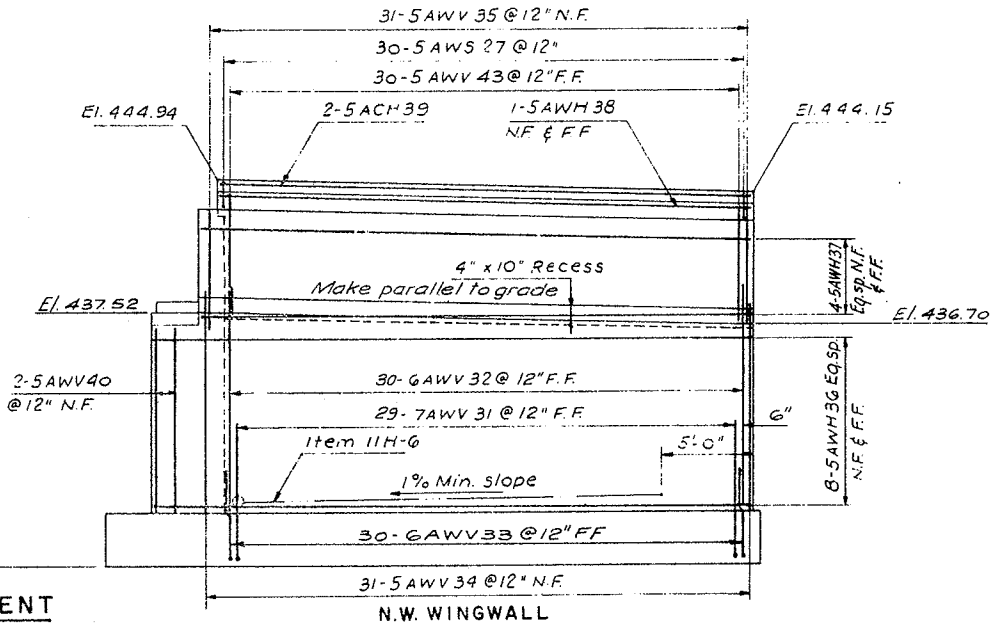

N.W. WINGWALL

WEST ABUTMENT

Scale 3/16" = 1'-0"

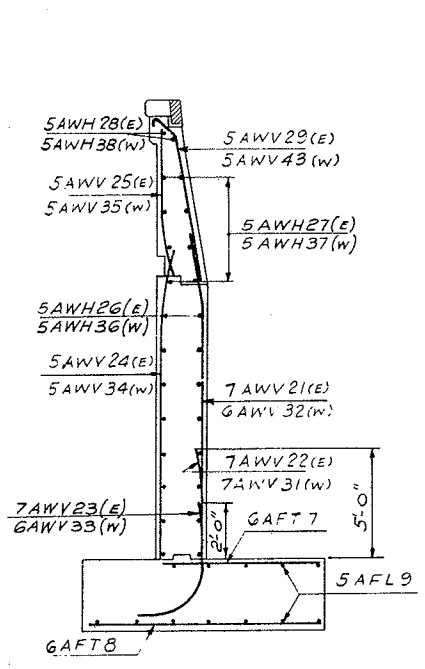

N.W. WINGWALL
N.E WINGWALL

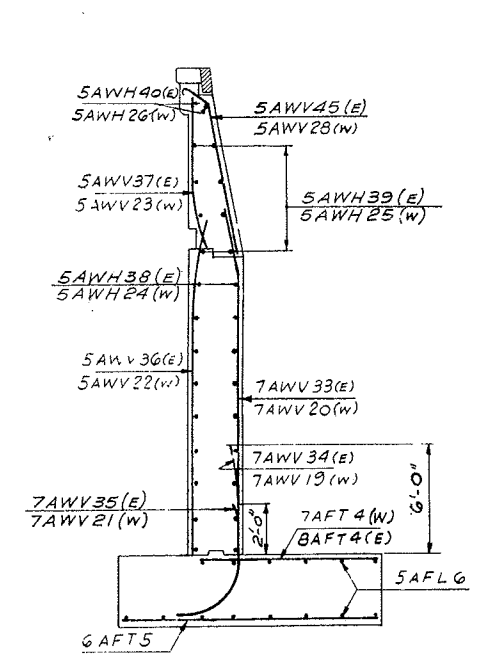

S.W. WINGWALL
S.E. WINGWALL

TYPICAL SECTIONS

Scale 1/4" = 1'-0"

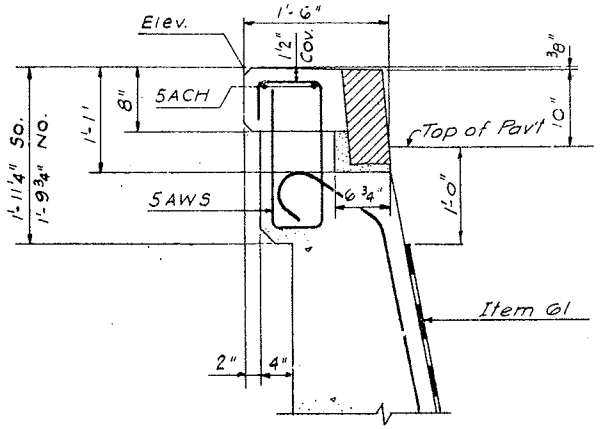

DETAIL

Scale 1" = 1'-0"

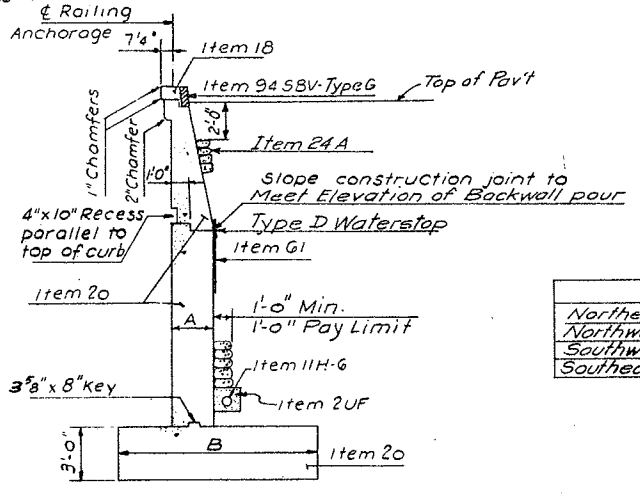

TYPICAL SECTION

Scale 3/16" = 1'-0"

	A	B
Northeast WW	2'-2"	10'-0"
Northwest WW	2'-2"	9'-6"
Southwest WW	2'-3"	10'-6"
Southeast WW	2'-5"	11'-4"

BUTTERNUT INTERCHANGE
F.A.I. 690 & F.A.I. 481

BRIDGE No. 5
"WN" LINE over ROUTE I 481 S.B.
WINGWALLS

DRAWING NO.	SCALE	DATE	SHEET NO.
7504-02	AS Shown	8/5/70	142

LOCKWOOD, KESSLER & BARTLETT, INC.
CONSULTING ENGINEERS SYOSSET, NEW YORK

F.I.S.H. 70-7

FED. RD. REG. NO.	STATE	FEDERAL AID PROJECT NO.	SHEET NO.	TO SHTS
1	NEW YORK	I-690-3(28) I-481-2(116)	143	3(

INTERSTATE ROUTE CONNECTION 570
BUTTERNUT INTERCHANGE (PHASE 2)

ONONDAGA COUNTY

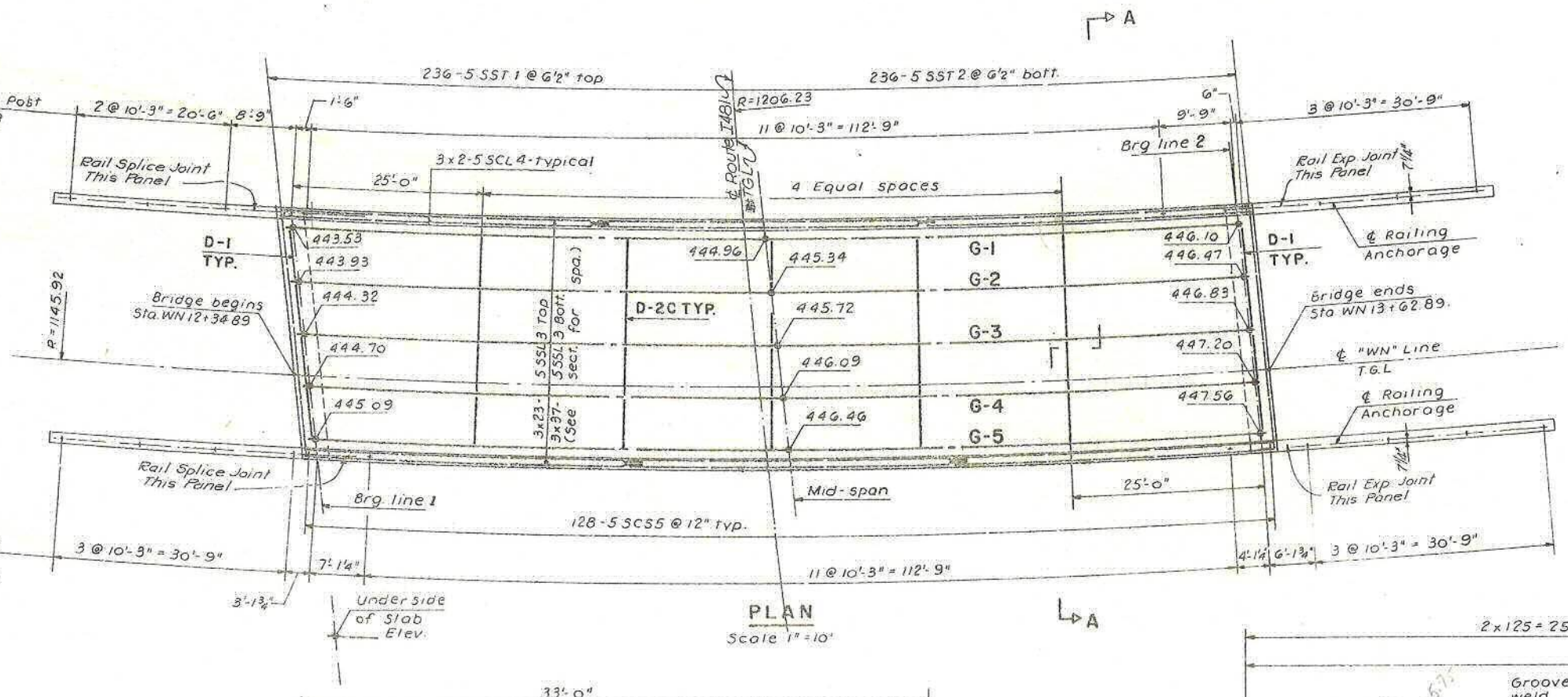

PLAN
Scale 1" = 10'

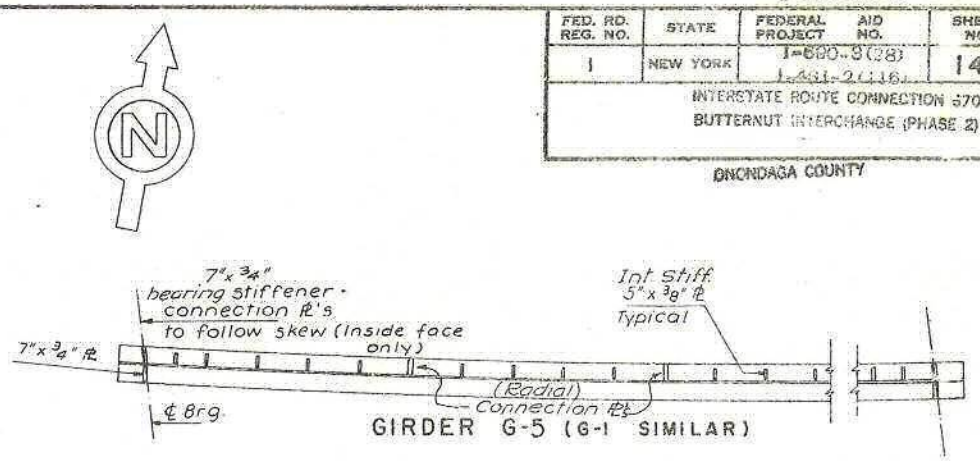

Diaphragm connection ℓ's to be 7"x 7/16" ℓ's (Typ.)

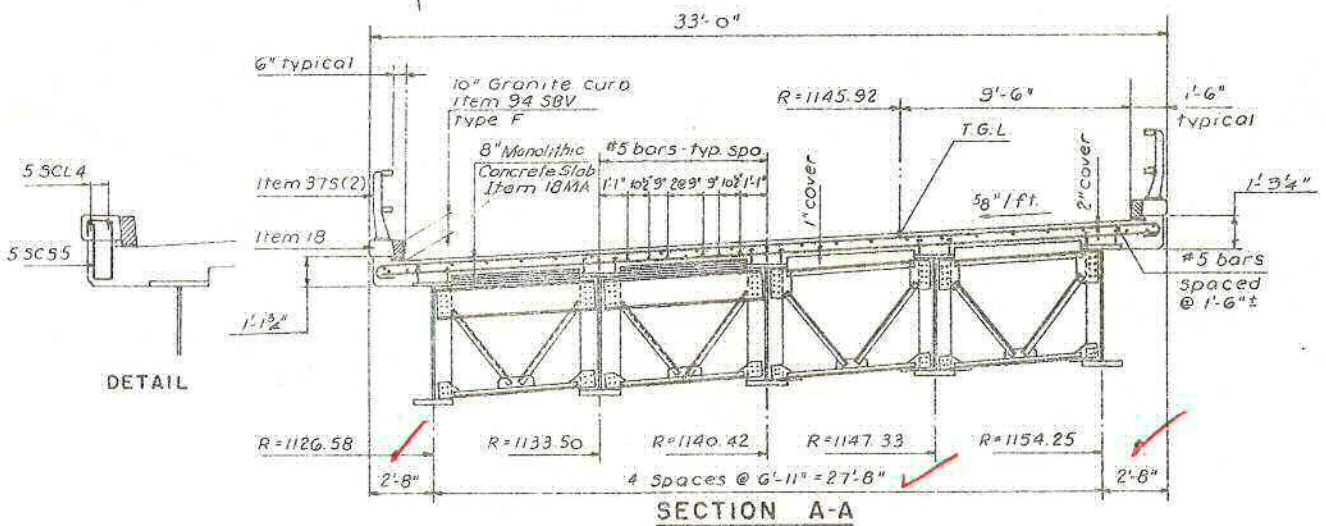

SECTION A-A
Scale 1/8" = 1'-0"

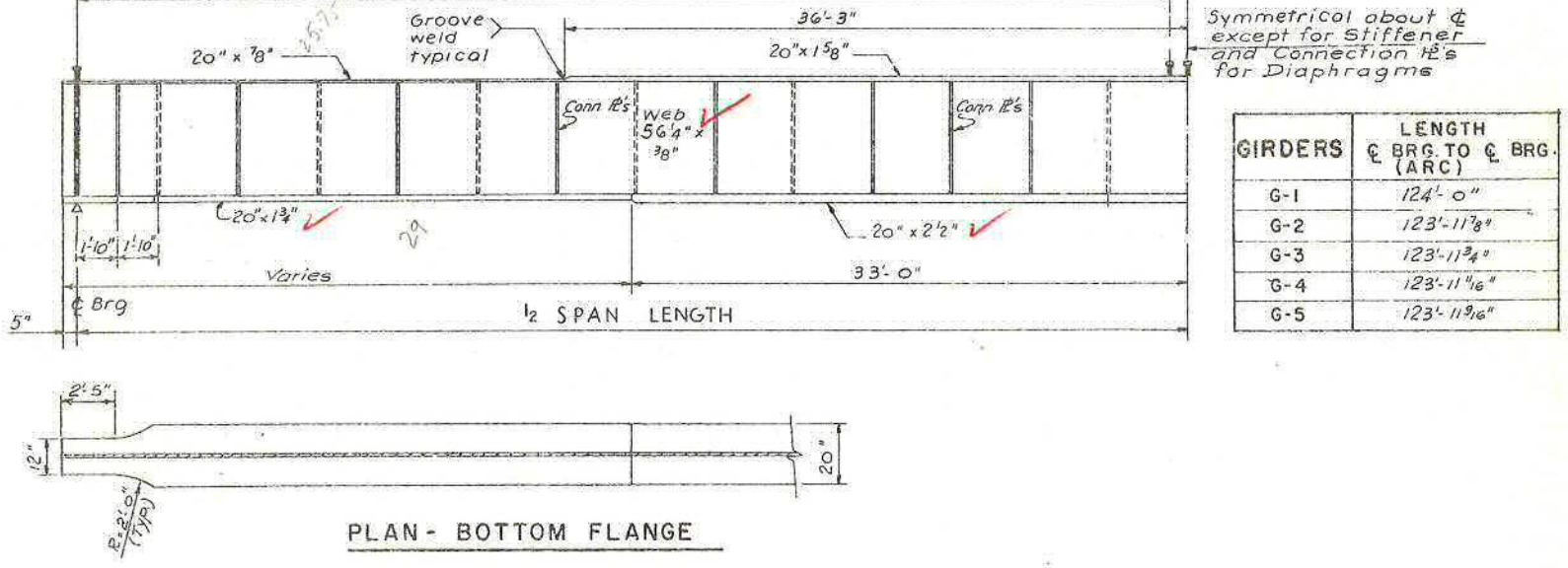

GIRDERS	LENGTH ℄ BRG. TO ℄ BRG. (ARC)
G-1	124'-0"
G-2	123'-11 7/8"
G-3	123'-11 3/4"
G-4	123'-11 11/16"
G-5	123'-11 9/16"

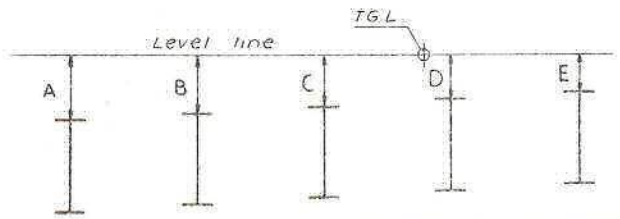

THEORETICAL VERTICAL MEASUREMENTS AT ℄ BRG.

BRG. LINE	VERTICAL MEASUREMENTS TO TOP OF STEEL				
	A	B	C	D	E
1	2'-0 3/8"	1'-7 5/8"	1'-3"	10 3/8"	5 5/8"
2	1'-11 1/2"	1'-7 7/8"	1'-2 3/4"	10 3/8"	6"

ADJUSTMENT FOR CAMBER		
	FASCIA GIRDER	INTERIOR GIRDER
SLAB CONCRETE	1 7/8"	2 1/16"
V.C.	1 3/4"	1 3/4"
SUPERIMPOSED DEAD LOAD	1/2"	7/16"
D.L. STEEL ERECTED	7/8"	7/8"
TOTAL	5"	5 1/8"

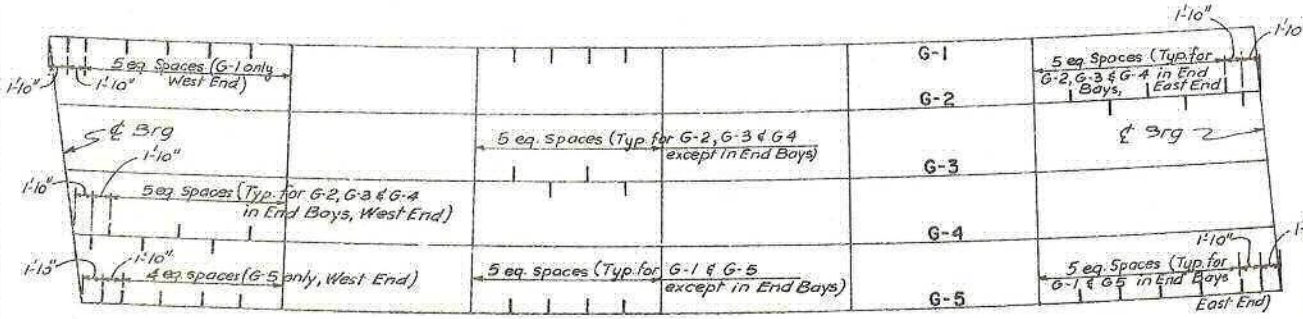

STIFFENER LAYOUT

NOTE
For Girder weld sizes and Diaphragm Details see Sheet No. 127

BUTTERNUT INTERCHANGE
F.A.I. 690 & F.A.I. 481
BRIDGE No. 5
"WN" LINE over ROUTE 1481 S.B.
SUPERSTRUCTURE

DRAWING NO.	SCALE	DATE	SHEET NO.
7504-02	As Shown	8/15/10	143

FED ROAD REG. NO.	STATE	CONTRACT NO.	SHEET NO.	TOTAL SHEETS
1	N.Y.	D259214	273	432

BRIDGE REHABILITATION PROJECT (ELEMENT SPECIFIC)
VARIOUS BRIDGES ON INTERSTATE 481
TOWN OF DEWITT AND CICERO
ONONDAGA COUNTY
P.I.N. 305613 B.I.N. 1093520

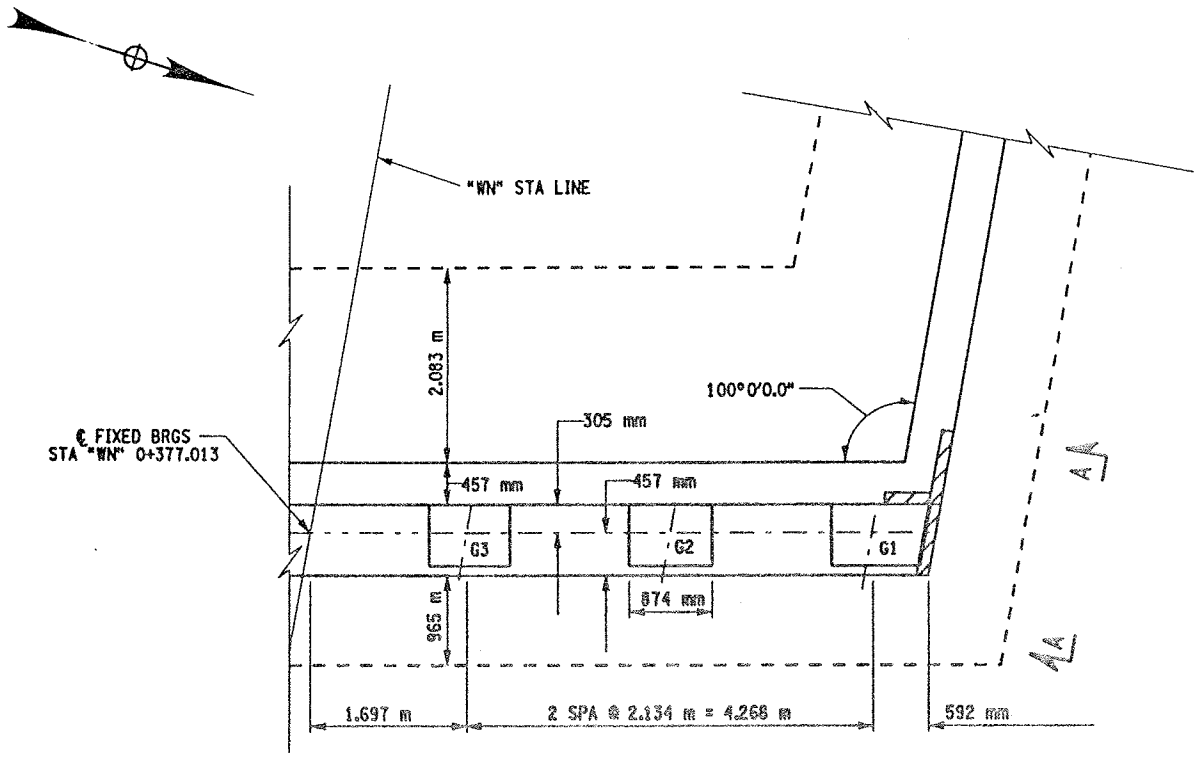

PLAN
SCALE 1:40

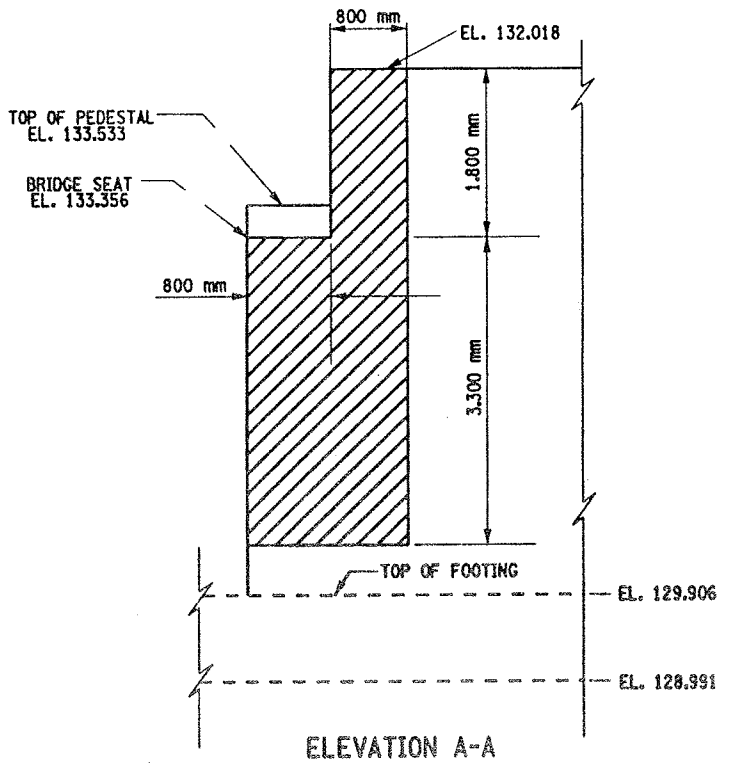

ELEVATION A-A
NOT TO SCALE

NOTES:

1. ALL DIMENSIONS SHOWN FOR CONCRETE REMOVAL ARE APPROXIMATE AND SHALL BE FIELD VERIFIED BY THE CONTRACTOR AND EIC.
2. REMOVE CONCRETE TO LIMITS SHOWN AS WELL AS TO SOUND CONCRETE, A.O.B.E.
3. WHEN REMOVING EXISTING CONCRETE, SAWCUT 5 mm MIN. TO PRODUCE NEAT REMOVAL LINES. ANY COST TO BE INCLUDED IN THE BID PRICE FOR ITEM 582.05M.
4. ALL EXISTING REINFORCEMENT TO REMAIN.
5. ELEVATIONS ARE GIVEN FOR QUANTITY ESTIMATES ONLY.
6. REFER TO CONTRACT FISH 70-7 FOR ORIGINAL CONSTRUCTION DETAILS
7. REMOVE ASBESTOS SHEET PACKING AT WEST ABUTMENT BACKWALL AS ENCOUNTERED. ASBESTOS REMOVAL SHALL BE PAID FOR UNDER ITEM 210.9913M.

AREAS OF PROPOSED WORK: ITEM 582.05M REMOVAL OF STRUCTURAL CONCRETE- REPLACEMENT WITH CLASS A CONCRETE

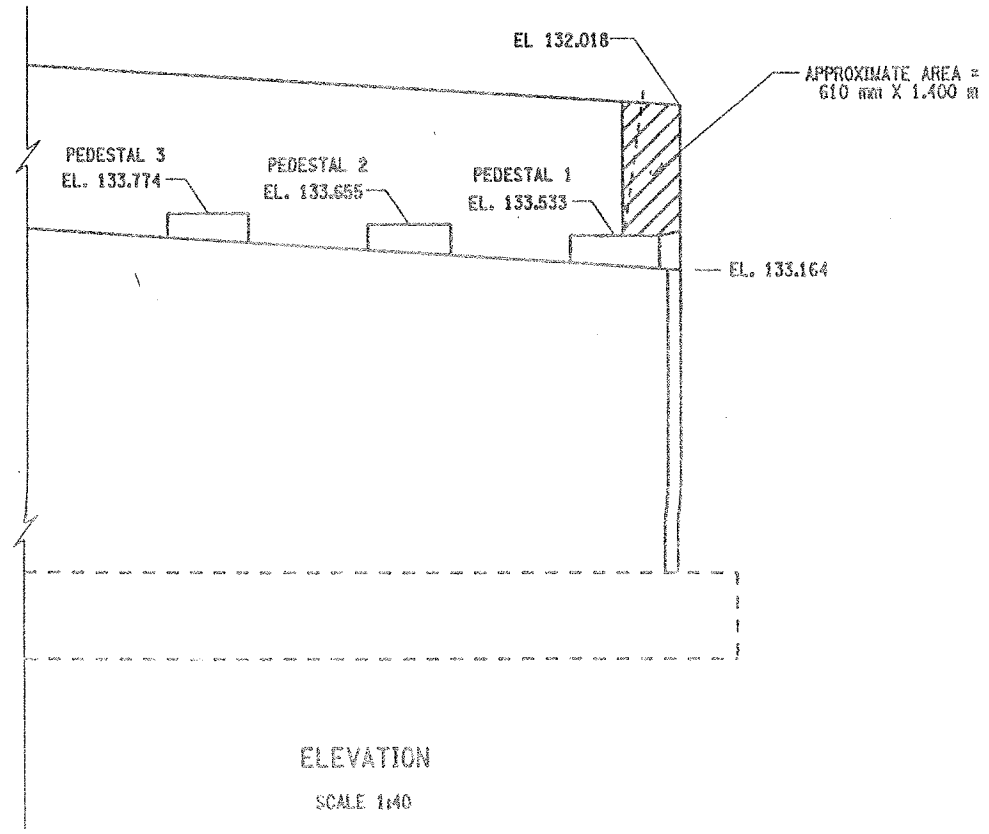

ELEVATION
SCALE 1:40

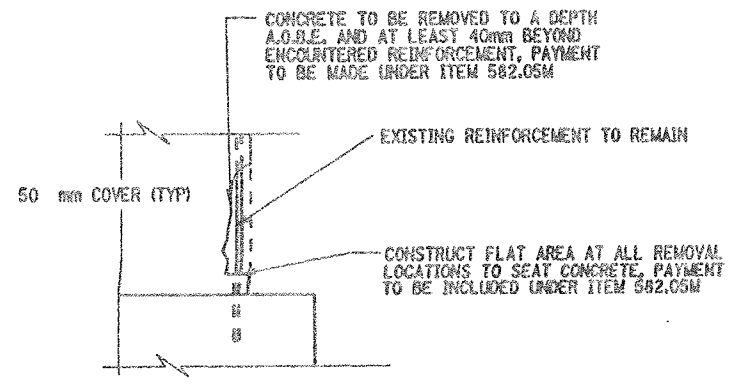

REMOVAL DETAIL
NOT TO SCALE

LIST OF ITEMS USED:

ITEM 582.05M - REMOVAL OF STRUCTURAL CONCRETE - REPLACEMENT WITH CLASS A CONCRETE (CM)
ITEM 210.9913M - REMOVAL & DISPOSAL OF MISCELLANEOUS ASBESTOS CONTAINING MATERIAL BV-12 (LS)

ALL DIMENSIONS ARE IN m UNLESS OTHERWISE NOTED

AS BUILT REVISIONS

SIGNATURE DATE

WN LINE
OVER
INTERSTATE 481 SB
WEST ABUTMENT
PLAN AND ELEVATION

STATE OF NEW YORK
DEPARTMENT OF TRANSPORTATION

FILENAME	REGION	DATE	DRAWING NO.
305613AW.A1B	3	10/02	A813-1

DESIGN SUPERVISOR ____ JOB MANAGER ____ DESIGNED BY ____ CHECKED BY ____
CHECKED BY ____ ESTIMATED BY ____ DRAFTED BY ____ CHECKED BY ____

FED ROAD REG. NO.	STATE	CONTRACT NO.	SHEET NO.	TOTAL SHEETS
1	N.Y.	D259214	365	432
BRIDGE REHABILITATION PROJECT (ELEMENT SPECIFIC)				
VARIOUS BRIDGES ON INTERSTATE 481				
TOWNS OF DEWITT AND CICERO				
ONONDAGA COUNTY				
P.I.N. 305613		B.I.N. ALL BIN'S		

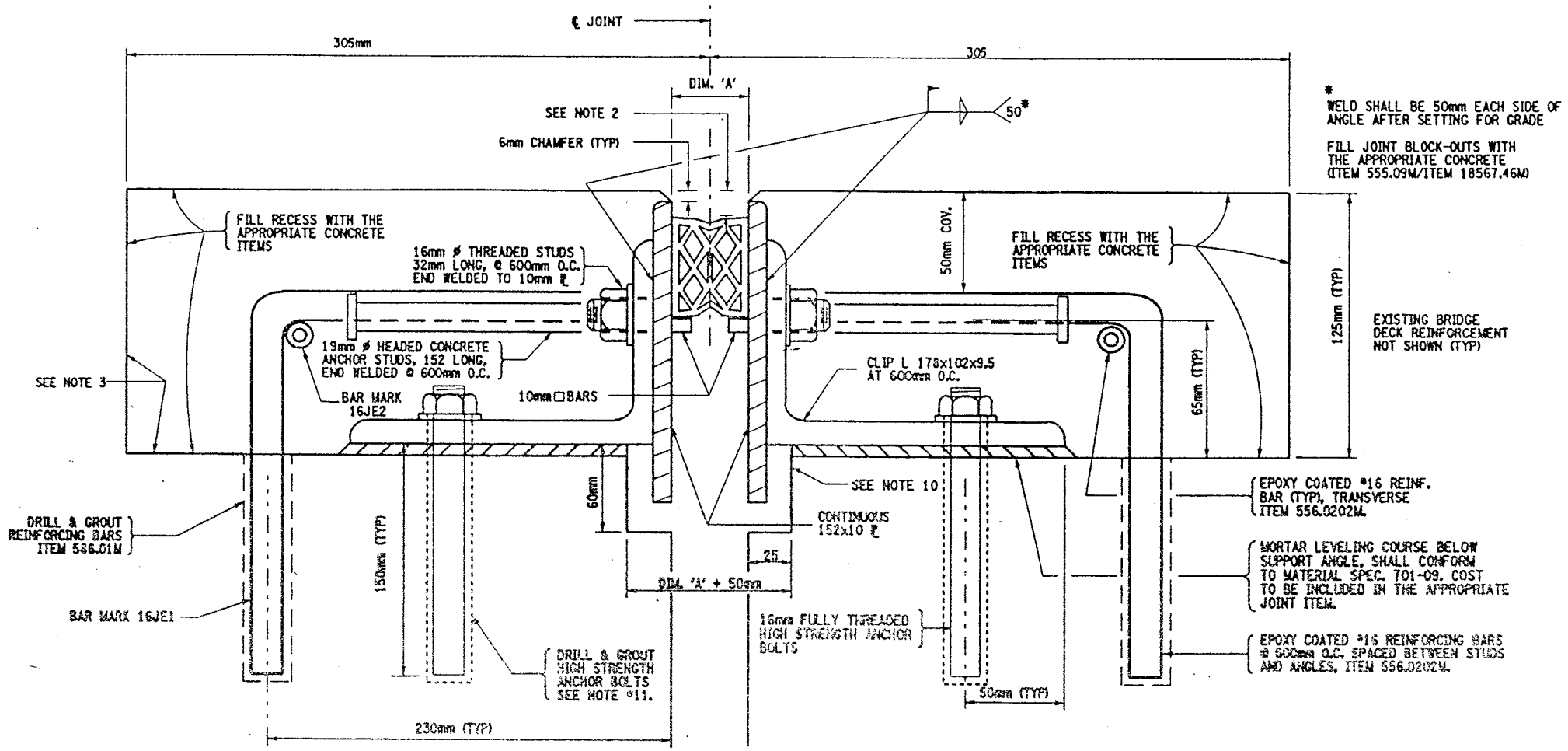

MODIFIED ARMORED COMPRESSION JOINT DETAIL

FOR INSTALLATION LOCATIONS SEE JOINT TABLE

NOT TO SCALE

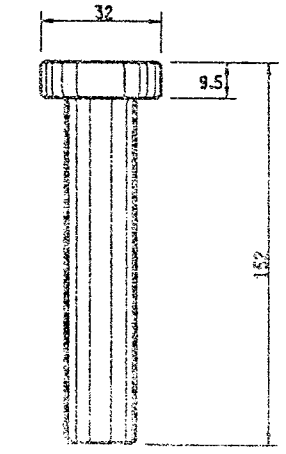

DETAIL OF HEADED CONCRETE ANCHOR STUD

NOT TO SCALE

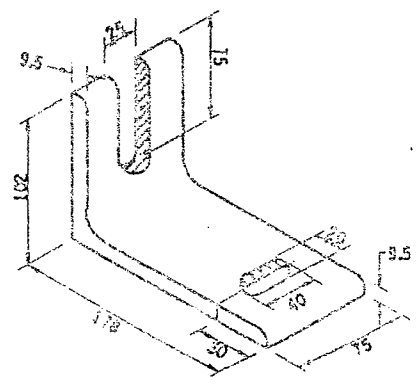

DETAIL OF CLIP ANGLE

NOT TO SCALE

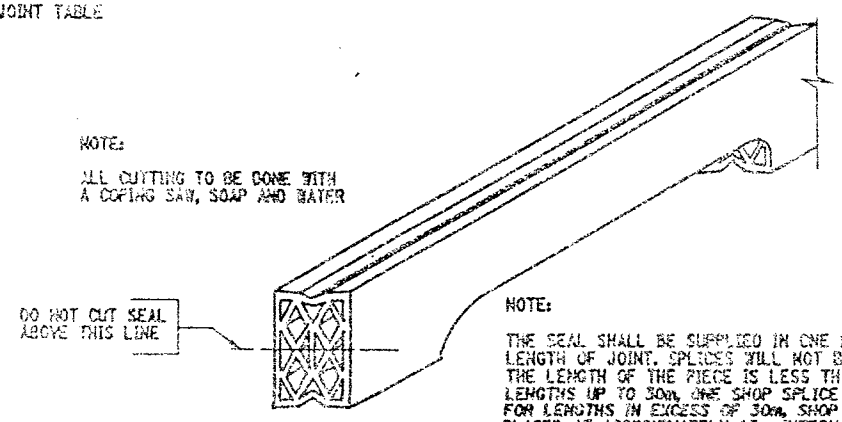

DETAIL FOR CUTTING SEAL

NOT TO SCALE

EPOXY POLYSULFIDE GROUT NOTE:

CONTRACTOR MAY WITH THE APPROVAL OF THE ENGINEER USE MATERIAL SPECIFICATION 721-03 EPOXY POLYSULFIDE GROUT, AT THE RECESSES, INSTEAD OF THE 12 HOUR CONTINUOUS PREWETTING REQUIREMENTS (PROJECT PROPOSAL). CONTRACTOR MUST ENSURE PROPER CONSTRUCTION PRACTICES ARE FOLLOWED WHEN USING THIS GROUT. THE USE OF EPOXY POLYSULFIDE GROUT SHALL BE AT NO ADDITIONAL COST TO THE STATE.

SEALS (mm)			ARMORED JOINT SYSTEM	
TYPE	NOMINAL WIDTH	DIM. "A" @ 20°C.	TYPE	END CONDITION
1	44	25	A1	Fixed End Only
2	51	30	A2	Exp. up to 18 m
3	64	38	A3	Exp. over 18 m to 23 m
4	76	44	A4	Exp. over 23 m to 27 m
5	89	52	A5	Exp. over 27 m to 38 m
6	102	60	A6	Exp. over 38 m to 46 m

Maximum Skew Limits: Fixed End - No Limit
Exp. End - 45° A2 thru A6

GENERAL NOTES:

1. THE TEMPERATURE OF THE BRIDGE MUST BE TAKEN ON THE STRUCTURAL STEEL SURFACE TO DETERMINE THE TEMPERATURE CORRECTION FOR THE JOINT OPENINGS.
2. THIS DEPTH SHALL BE INDICATED ON THE SHOP DRAWINGS AND SHALL BE SUCH THAT WHEN THE SEAL IS COMPRESSED TO 50% OF ITS NORMAL WIDTH, THE TOP OF THE SEAL SHALL BE NOT LESS THAN 6mm NOR MORE THAN 19mm BELOW THE TOP OF THE ROADWAY.
3. RECESSES RECEIVING ITEM 555.09M, AFTER SURFACE PREPARATION, THOROUGHLY WET THE CONCRETE SURFACE AND ALL POROUS SURFACES TO BE IN CONTACT WITH NEW CONCRETE, FOR 12 HOURS. NOTE THE USE OF MATERIAL SPECIF. 705-22 PORTLAND CEMENT MORTAR BONDING GROUT HAS BEEN ELIMINATED, SEE INSERT IN PROJECT PROPOSAL.
4. A WATER-TIGHT INTEGRITY TEST SHALL BE PERFORMED BY THE CONTRACTOR AT ALL COMPRESSION SEAL JOINT INSTALLATIONS. THE FOLLOWING TEST PARAMETERS SHALL BE INCORPORATED IN THE TEST:
   1. A 15 MINUTE MINIMUM PERIOD OF STANDING WATER, WITH A 25mm MINIMUM DEPTH SHALL BE USED.
   2. IN ADDITION, IN LOCATIONS OF COPED AREAS OF THE SEAL, BENDS, ETC., WATER PRESSURE SHALL BE APPLIED, TO THE SATISFACTION OF THE EIC FOR A 15 MINUTE PERIOD.
   3. LIMITS OF TEST AREA SHALL BE FROM FACE OF CURB TO FACE OF CURB ON THE DECK SURFACE.
5. NO PAYMENT WILL BE MADE TO THE CONTRACTOR FOR THE JOINT IF, IN THE OPINION OF THE ENGINEER, THE INSTALLED JOINT LEAKS WITHIN THE 15 MINUTE TEST PERIOD.
6. PRIOR TO THE START OF WORK AT EACH JOINT, THE CONTRACTOR SHALL SUBMIT A WRITTEN PLAN FOR THE SPECIFICS OF THE TESTING, INCLUDING CONTAINMENT OF THE WATER AND THE METHOD TO BE USED FOR ACCESS BY THE E.I.C. TO THE BOTTOM OF THE JOINT BEING TESTED.
7. THE COST OF ALL LABOR, EQUIPMENT AND MATERIALS REQUIRED FOR THE TESTING WHICH INCLUDES, BUT IS NOT LIMITED TO:
   1. A CONTAINMENT SYSTEM FOR THE TEST WATER.
   2. PROVISIONS FOR E.I.C. ACCESS TO THE BOTTOM OF THE JOINT.
   SHALL BE INCLUDED IN THE PRICE BID FOR THE RESPECTIVE JOINT ITEMS.
8. THE COST OF ALL LABOR, EQUIPMENT, AND MATERIALS TO INSTALL THE NEW JOINT SHALL BE INCLUDED IN THE UNIT PRICE BID FOR THE APPROPRIATE JOINT ITEM.
9. MORTAR LEVELING COURSE SHALL CONFORM TO MATERIAL SPECIFICATION 701-09 AND SHALL BE INCLUDED IN THE PRICE BID FOR THE APPROPRIATE JOINT ITEM.
10. THE DIMENSIONS OF THE REMOVAL AREA UNDER THE 152x10 PLATES ARE SHOWN TO ALLOW SPACE FOR THE PLATES TO REST FREELY. IF THERE IS ALREADY ADEQUATE SPACE, NO CONCRETE REMOVAL OR REPLACEMENT IS REQUIRED IN THIS AREA.
11. 16 mm ø ASTM A325M ANCHOR BOLT TO BE DRILLED AND GROUTED IN PLACE IN ACCORDANCE WITH THE REQUIREMENTS OF SUB-SECTION 586-3.02. GROUTING MATERIALS SHALL BE IN ACCORDANCE WITH MATERIALS SUB-SECTION 701-07 ANCHORING MATERIALS-CHEMICALLY CURING. HOLES TO BE DRILLED TO THE DIAMETER AND DEPTH RECOMMENDED BY THE MANUFACTURER OF THE GROUTING MATERIAL (MIN. DEPTH OF 150 mm). THE COST OF THE ANCHORS, INCLUDING DRILLING AND GROUTING, SHALL BE INCLUDED IN THE UNIT PRICE BID FOR THE APPROPRIATE JOINT SYSTEM ITEM.
12. IT IS DESIRABLE TO HAVE THE ARMORED JOINT WITH ITS COMPRESSION SEAL ASSEMBLED IN THE SHOP AND DELIVERED TO THE JOB SITE ALL SET FOR INSTALLATION IN ITS PREFORMED RECESS IN THE STRUCTURAL SLAB. IN CASES WHERE THE ARMORED JOINT CANNOT BE ASSEMBLED IN THE SHOP, DUE TO ITS EXCESSIVE LENGTH CAUSING SHIPPING PROBLEMS, THE JOINT SHALL BE SEALED WITH THE COMPRESSION SEAL BEFORE THE STRUCTURE IS OPENED TO TRAFFIC INCLUDING CONSTRUCTION TRAFFIC, AND BEFORE DIS CONTINUING OPERATIONS WHEN WORK IS SUSPENDED DURING THE WINTER.

LIST OF ITEMS USED:

ITEM 555.09M - STRUCT. CONCRETE, CLASS "HP" (CU)
ITEM 556.0202M - EPOXY COATED BAR REINF. FOR STRUCT. (KG)
ITEM 567.31M - MOD. ARMORED JOINT SYSTEM W/ COMP. SEAL TYPE A1 (m)
ITEM 567.32M - MOD. ARMORED JOINT SYSTEM W/ COMP. SEAL TYPE A2 (m)
ITEM 567.35M - MOD. ARMORED JOINT SYSTEM W/ COMP. SEAL TYPE A5 (m)
ITEM 567.36M - MOD. ARMORED JOINT SYSTEM W/ COMP. SEAL TYPE A6 (m)
ITEM 18567.46M - ELASTOMERIC CONC. FOR BRIDGE JT. SYSTEMS (M)
ITEM 586.01M - DRILL & GROUT REINF. BARS (mm)

ALL DIMENSIONS ARE IN mm UNLESS OTHERWISE NOTED

AS BUILT REVISIONS

SIGNATURE DATE

INTERSTATE 481

COMPRESSION SEAL JOINT DETAILS

STATE OF NEW YORK
DEPARTMENT OF TRANSPORTATION

FILENAME	REGION	DATE	DRAWING NO.
305613AJJA1	3	10/02	JD-1

DESIGN SUPERVISOR ____ JOB MANAGER ____ DESIGNED BY ____ ESTIMATED BY ____ DRAFTED BY ____ CHECKED BY ____ CHECKED BY

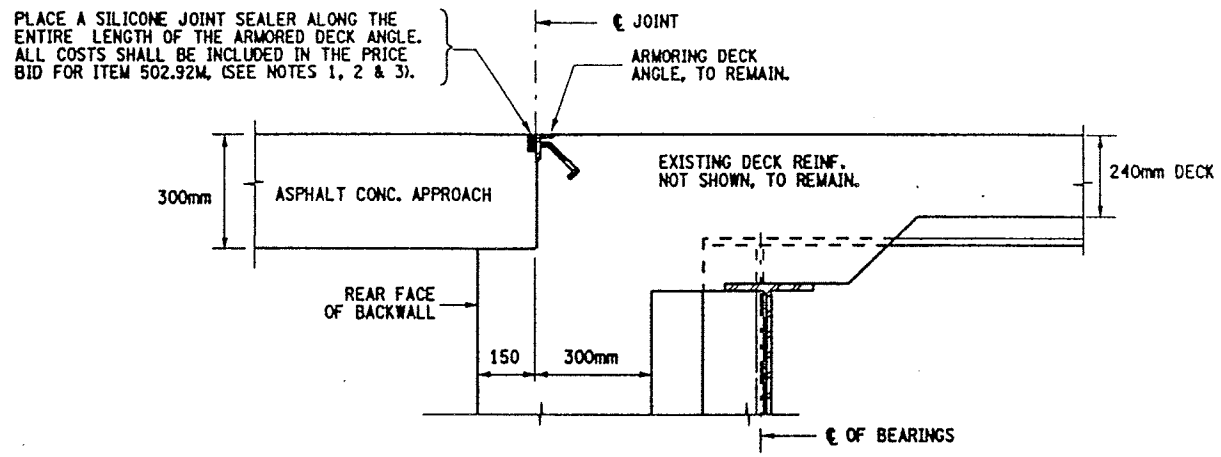

TYPICAL SECTION VIEW
EXISTING ARMORED DECK ANGLE AT ABUTMENT

BIN 1093520 - W. ABUT. (BEG. ABUT.)
BIN 1093540 - N. ABUT. (END ABUT.)
NOT TO SCALE

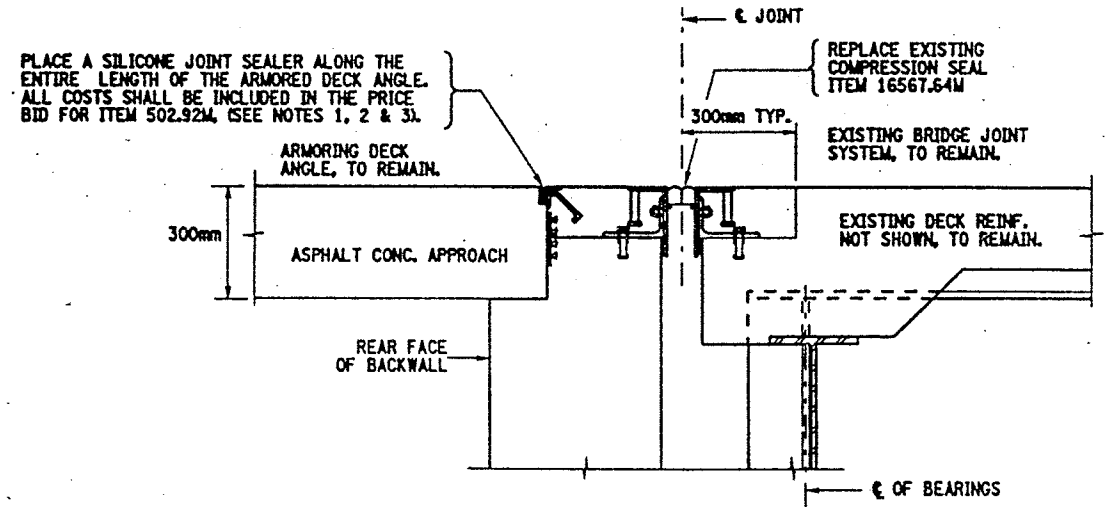

TYPICAL SECTION VIEW
EXISTING ARMORED JOINT SYSTEM AT ABUTMENT

BIN 1093520 - E. ABUT. (END ABUT.)
BIN 1093540 - S. ABUT. (BEG. ABUT.)
NOT TO SCALE

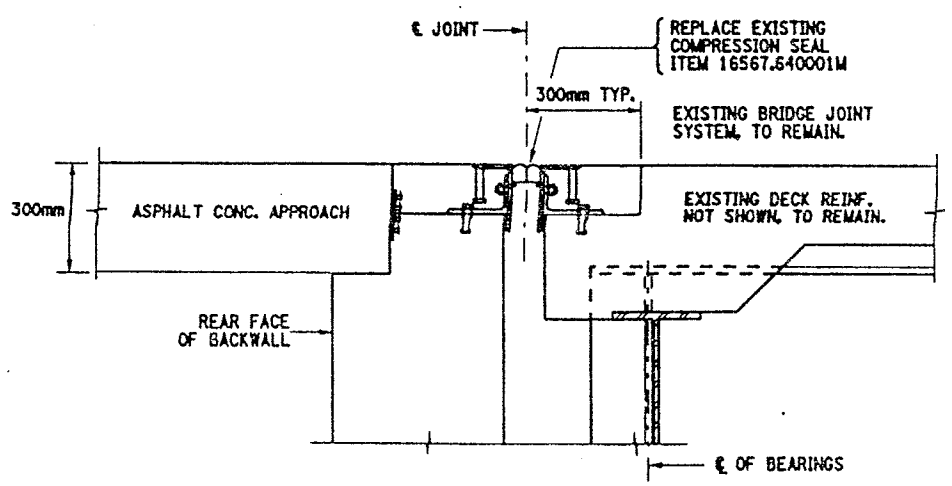

TYPICAL SECTION VIEW
EXISTING ARMORED JOINT SYSTEM AT ABUTMENT

BIN 1072791 - BOTH ABUTMENTS
NOT TO SCALE

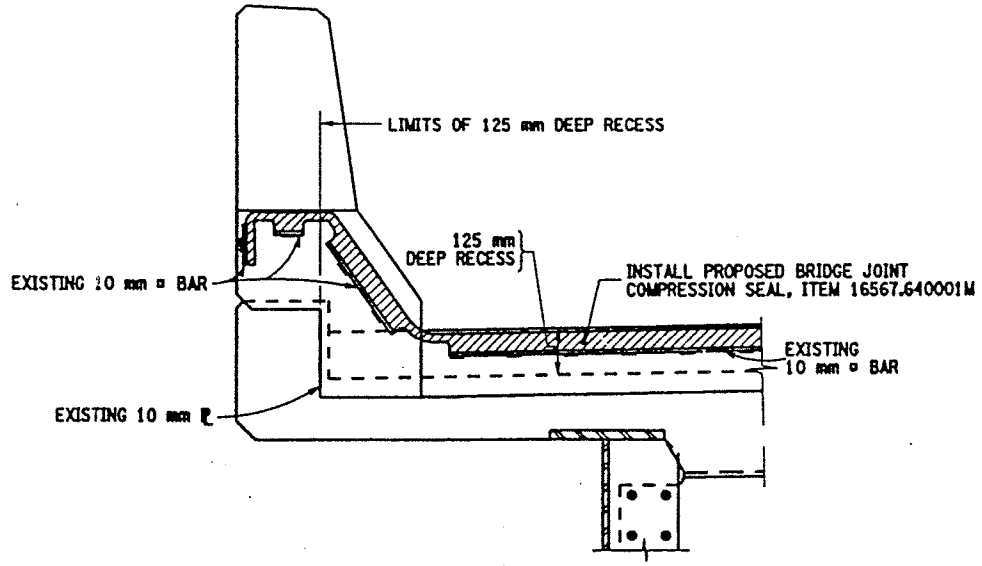

PROPOSED JOINT SEAL
TYPICAL (CONCRETE PARAPET)

BIN 1072791 - REPLACE SEAL AT BOTH ABUTMENTS
NOT TO SCALE

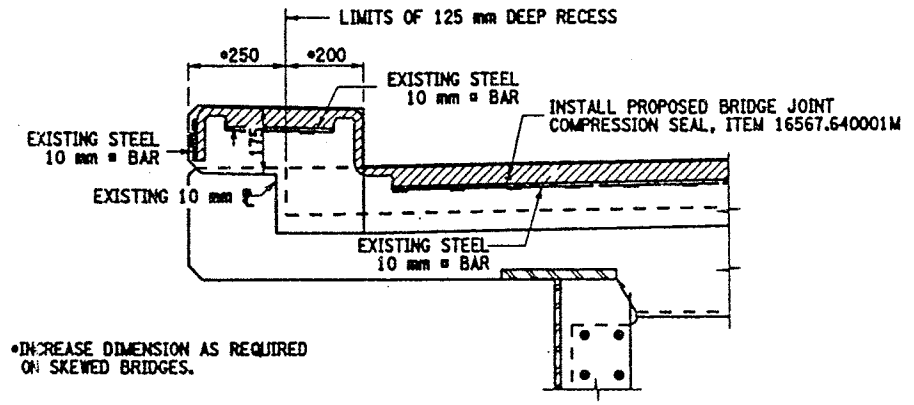

PROPOSED JOINT SEAL
TYPICAL (BRUSH CURB)

BIN 1093520 - EAST ABUTMENT
BIN 1093540 - SOUTH ABUTMENT
NOT TO SCALE

LIST OF ITEMS USED:

ITEM 502.92M - SEALING TRANSVERSE JOINTS (M)
ITEM 16567.640001M - REPLACE COMPRESSION SEAL FOR EXISTING BRIDGE JOINT (M)

FED ROAD REG. NO.	STATE	CONTRACT NO.	SHEET NO.	TOTAL SHEETS
1	N.Y.	D259214	411	432

BRIDGE REHABILITATION PROJECT (ELEMENT SPECIFIC)
VARIOUS BRIDGES ON INTERSTATE 481
TOWNS OF DEWITT AND CICERO
ONONDAGA COUNTY
P.I.N. 305613 | B.I.N. VARIOUS

DETAILS ON THIS SHEET PERTAIN TO BIN'S 1072791, 1093520 & 1093540.

NOTES:

1) TO SEAL THE INTERFACE BETWEEN THE EXISTING ASPHALT APPROACH AND THE EXISTING ARMOR DECK ANGLE, USE A SILICONE JOINT SEALER FROM THE MATERIALS BUREAU APPROVED LIST.
2) THE SILICONE JOINT SEALER SHALL BE PLACED TRANSVERSELY FOR THE ENTIRE LENGTH OF THE ARMORED DECK ANGLE.
3) PRIOR TO PLACEMENT OF THE SILICONE JOINT SEALER THE AREA SHALL BE CLEANED AND FREE OF ANY LOOSE MATERIAL TO THE SATISFACTION OF THE ENGINEER.
4) REFER TO DWG. NO. JT-2 AND JT-3 FOR ADDITIONAL INFORMATION.
5) NO PLAN VIEW SHOWN FOR THESE STRUCTURES.
6) REFER DWG. NO. JD-43, FOR ADDITIONAL INFORMATION BIN 1072791.

WORK TO BE DONE:

BIN 1072791 -

REPLACE EXISTING COMPRESSION SEALS AT BOTH ABUTMENTS. BEG. ABUT. (WEST) EXISTING TYPE A-1 ARMORED JOINT SYSTEM END ABUT. (EAST) EXISTING TYPE A-5 ARMORED JONIT SYSTEM

BIN 1093520 -

BEG. ABUTMENT (WEST ABUT.) - EXISTING ARMORED DECK ANGLE, TO REMAIN. PLACE SILICONE SEALER MATERIAL.

END ABUTMENT (EAST ABUT.) - EXISTING TYPE A-5 ARMORED JOINT SYSTEM WITH COMPRESSION SEAL AND ARMORED DECK ANGLE TO REMAIN. REPLACE COMPRESSION SEAL AND PLACE SILICONE SEALER MATERIAL.

BIN 1093540 -

BEG. ABUTMENT (SOUTH ABUT.) - EXISTING TYPE A-5 ARMORED JOINT SYSTEM WITH COMPRESSION SEAL AND ARMORED DECK ANGLE TO REMAIN. REPLACE COMPRESSION SEAL AND PLACE SILICONE SEALER MATERIAL.

END ABUTMENT (NORTH ABUT.) - EXISTING ARMORED DECK ANGLE, TO REMAIN. PLACE SILICONE SEALER MATERIAL.

TIMBER BARRIER:

BIN 1072791 SB - SOUTH FASCIA (LEFT SIDE) PARAPET HAS A TIMBER NOISE BARRIER ATTACHED TO THE BACK SIDE OF THE PARAPET. THIS TIMBER NOISE BARRIER TO REMAIN IT MAY BE NECESSARY TO TEMPORARILY REMOVE THE SUPPORT BRACKETS TO FACILITATE INSTALLATION OF THE PROPOSED BRIDGE JOINT SEAL.

ANY ADDITIONAL SUPPORT TO THE TIMBER NOISE BARRIER DEEMED NECESSARY BY THE ENGINEER, DURING THIS REMOVAL OF THE SUPPORT BRACKETS SHALL BE INCLUDED IN THE PRICE BID FOR ITEM 16567.640001M.

ALL DIMENSIONS ARE IN mm UNLESS OTHERWISE NOTED

AS BUILT REVISIONS

SIGNATURE DATE

I-690 EB RAMP TO I-481 NB & I-481 OVER THOMPSON RD
WN LINE OVER I-481 SB
BRIDGE JOINT DETAILS

STATE OF NEW YORK
DEPARTMENT OF TRANSPORTATION

FILENAME	REGION	DATE	DRAWING NO.
305613AJJA1	3	10/02	J0-47

DESIGN SUPERVISOR — JOB MANAGER — DESIGNED BY — ESTIMATED BY — DRAFTED BY — CHECKED BY

BIN: 1093520
I690 EB - I481 NB RAMP /
I481 SB

BEGIN ABUTMENT CONDITION SKETCH

NOT TO SCALE

DATE: 01/22/2014

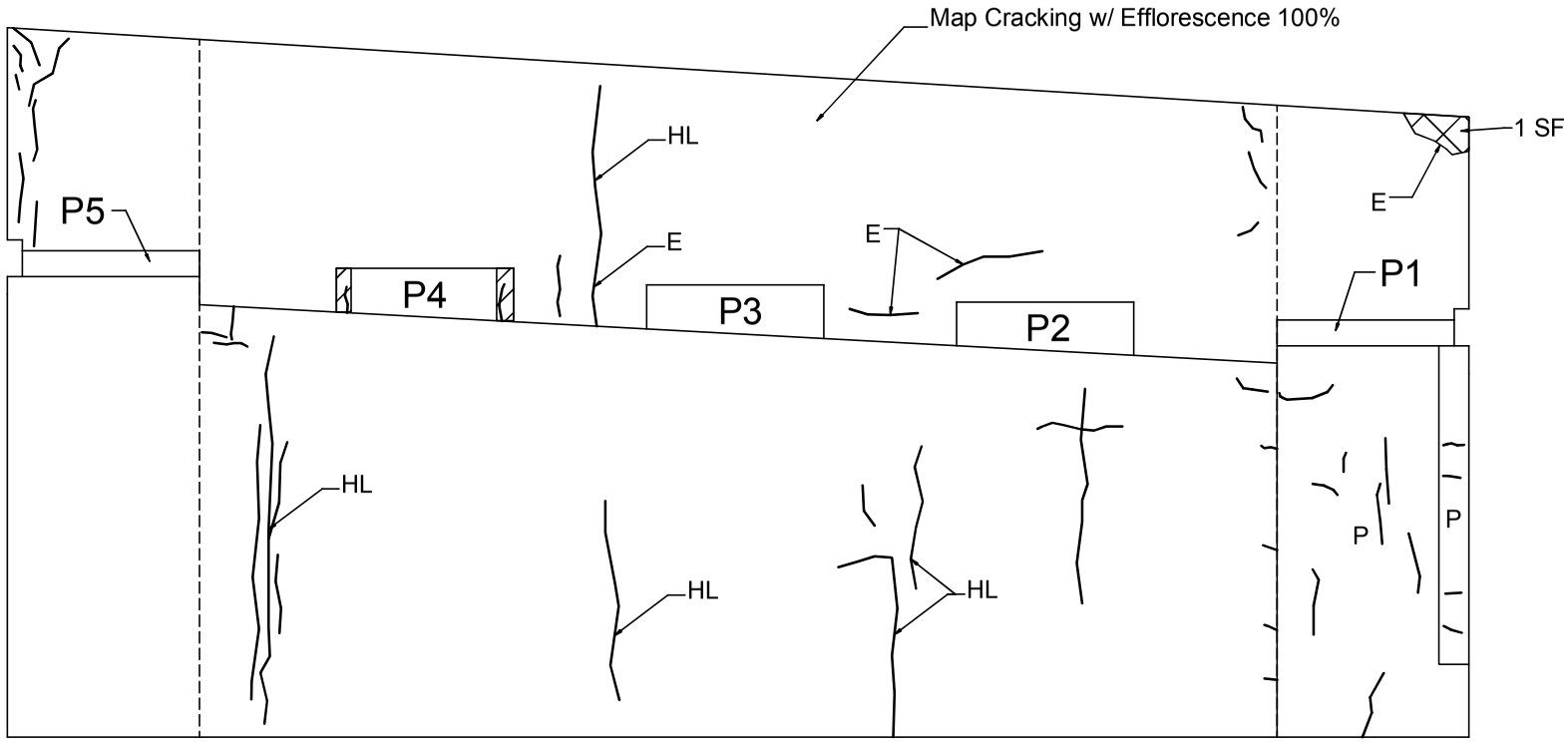

ELEVATION

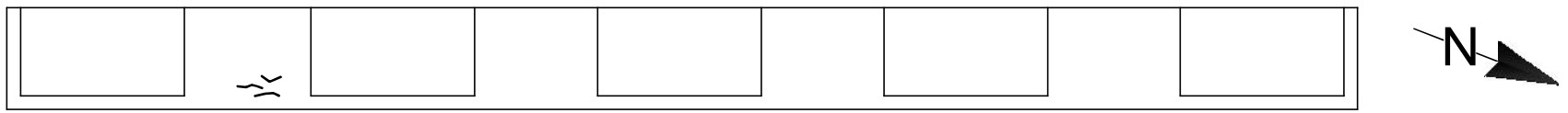

PLAN

LEGEND					
Hollow	P	Patch	Crack		
E	Efflorescence	HL	Hairline	Spall	

BIN: 1093520
I690 EB - I481 NB RAMP /
I481 SB

END ABUTMENT CONDITION SKETCH

NOT TO SCALE

DATE: 01/22/2014

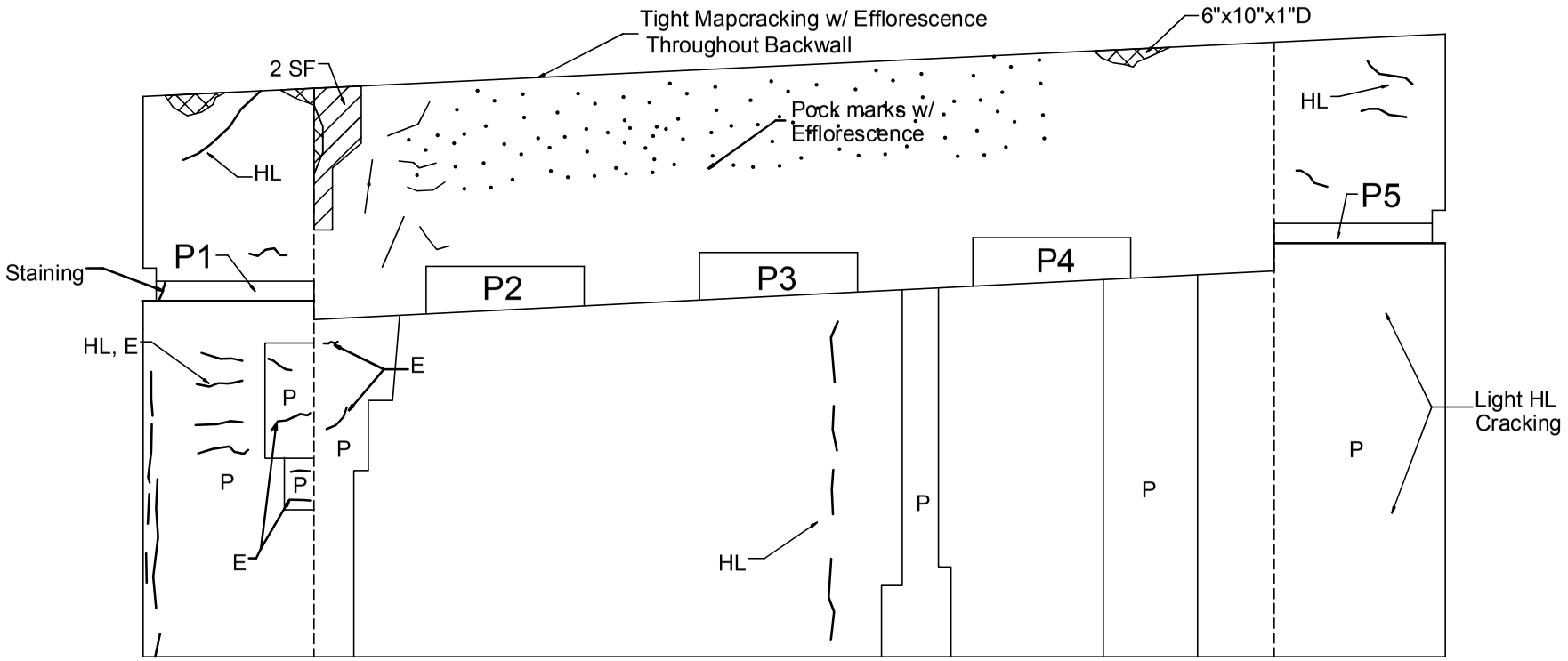

ELEVATION

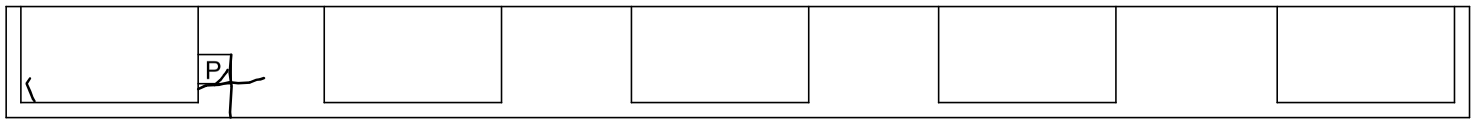

PLAN

LEGEND

	Hollow	P	Patch		Crack
E	Efflorescence	HL	Hairline		Spall

BIN: 1093520
I690 EB - I481 NB RAMP /
I481 SB

TOP OF DECK DETERIORATION SKETCH

NOT TO SCALE

DATE: 01/22/2014

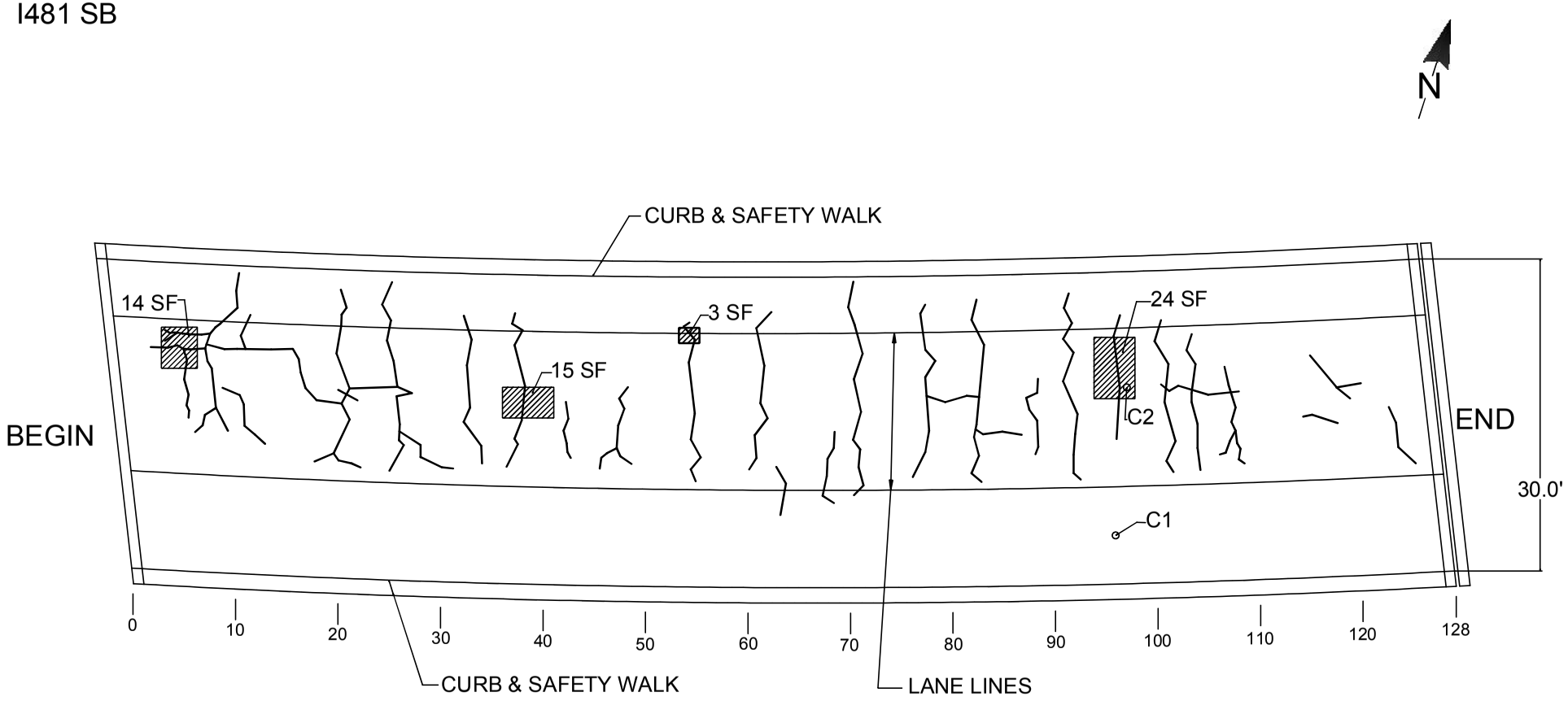

TOTAL DAMAGED AREA EQUALS 56 SF WHICH IS 1.5% OF DECK SURFACE

LEGEND

- Hollow Concrete
- Core Location
- Crack

BIN: 1093520
I690 EB - I481 NB RAMP /
I481 SB

UNDERSIDE OF DECK SKETCH

NOT TO SCALE

DATE: 01/22/2014

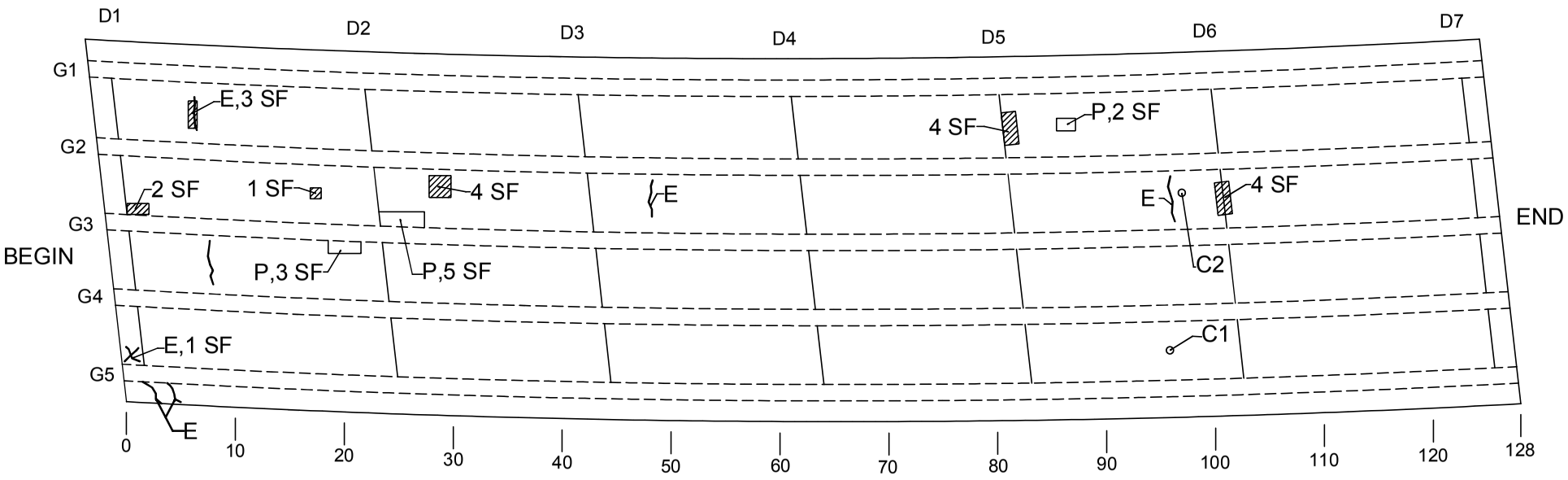

TOTAL DAMAGED AREA EQUALS 19 SF WHICH IS 0.4% OF DECK SURFACE

LEGEND			
	Hollow Concrete	P	Patch
E	Efflorescence		Crack
	Core Location		

IN-DEPTH PHOTO DOCUMENTATION

BIN: 1093520
I690 EB - I481 NB RAMP / I481 SB

IN-DEPTH INSPECTION
PHOTO LOCATION SKETCH

DATE: 01/22/2014

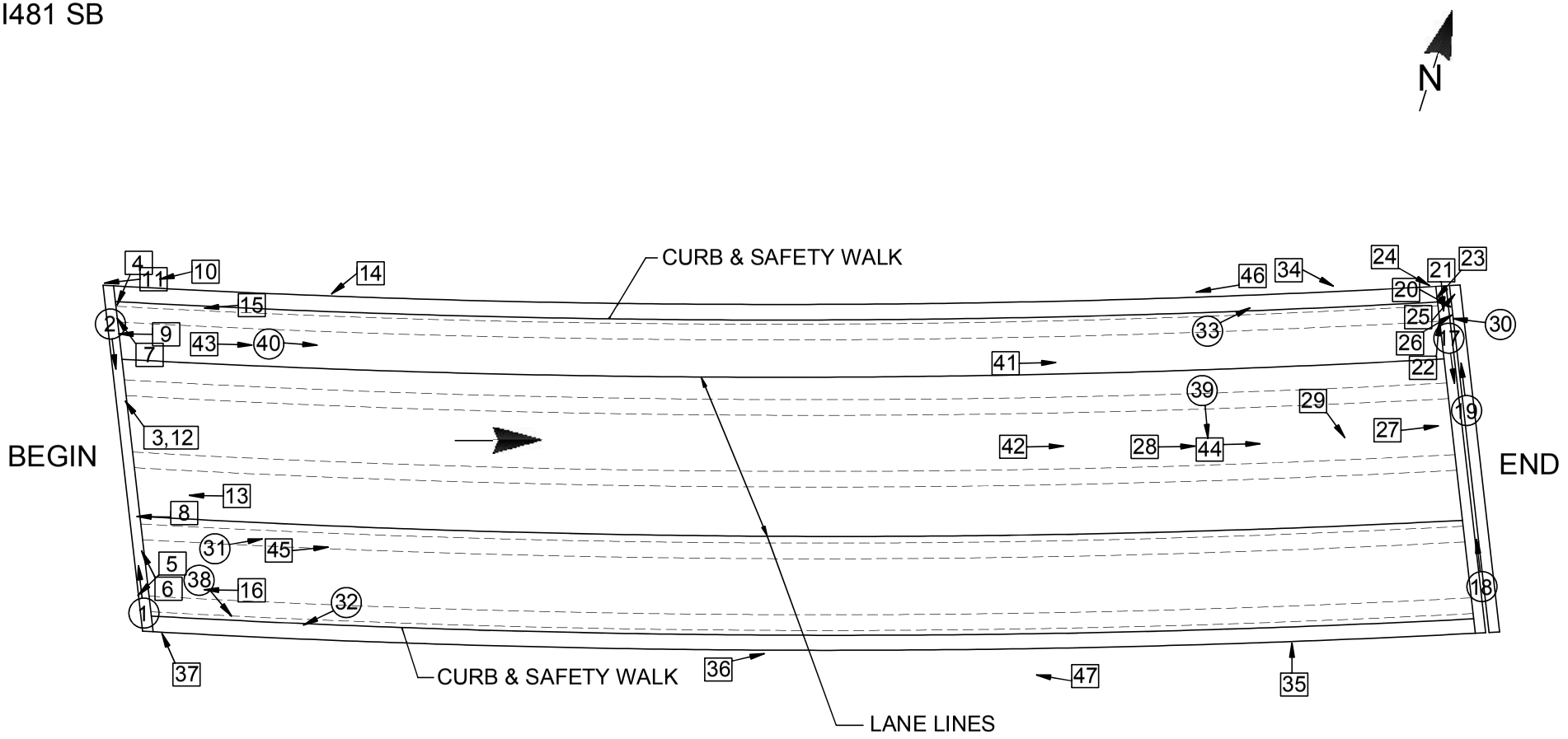

LEGEND	
XX	Photo Above Deck
XX	Photo Below Deck

In-Depth Inspection Photos

I-690 EB Ramp to I-481NB over
I-481 SB , BIN 1093520



DESCRIPTION: JOINT WITH DECK AT BEGIN –
LOOKING FROM RIGHT TO LEFT

PHOTO 1



DESCRIPTION: JOINT WITH DECK AT BEGIN –
LOOKING FROM LEFT TO RIGHT

PHOTO 2



DESCRIPTION: BEGIN ABUTMENT BACKWALL BAY 2 – LEFT SIDE

PHOTO 3



DESCRIPTION: BEGIN ABUTMENT BEARING G1 – LEFT SIDE

PHOTO 4



DESCRIPTION: BEGIN ABUTMENT BEARING B5 – LEFT SIDE

PHOTO 5



DESCRIPTION: BEGIN ABUTMENT SEAT BAY 4 – LOOKING FROM RIGHT TO LEFT

PHOTO 6



DESCRIPTION: BEGIN ABUTMENT PEDESTAL P1 – RIGHT SIDE

PHOTO 7



DESCRIPTION: BEGIN ABUTMENT PEDESTAL P4 – FRONT FACE LEFT SIDE

PHOTO 8



DESCRIPTION: BEGIN ABUTMENT BACKWALL BAY 1

PHOTO 9



DESCRIPTION: BEGIN ABUTMENT BACKWALL – LEFT SIDE

PHOTO 10



DESCRIPTION: BEGIN ABUTMENT BACKWALL – LEFT SIDE

PHOTO 11



DESCRIPTION: BEGIN ABUTMENT BACKWALL BAY 2 – LOOKING FROM RIGHT TO LEFT

PHOTO 12



DESCRIPTION: BEGIN ABUTMENT BACKWALL BAY 3

PHOTO 13



DESCRIPTION: BEGIN ABUTMENT STEM

PHOTO 14



DESCRIPTION: BEGIN ABUTMENT STEM – LEFT SIDE

PHOTO 15



DESCRIPTION: BEGIN ABUTMENT STEM AT BAY 4

PHOTO 16



DESCRIPTION: END ABUTMENT JOINT WITH DECK – LOOKING FROM LEFT TO RIGHT

PHOTO 17



DESCRIPTION: END ABUTMENT JOINT WITH DECK – LOOKING FROM RIGHT TO LEFT

PHOTO 18



DESCRIPTION: END ABUTMENT JOINT WITH DECK – LOOKING FROM RIGHT TO LEFT

PHOTO 19



DESCRIPTION: END ABUTMENT BEARING B1 – LEFT SIDE

PHOTO 20



DESCRIPTION: END ABUTMENT BEARING B1 – LOOKING FROM LEFT TO RIGHT

PHOTO 21



DESCRIPTION: END ABUTMENT SEAT BAY 1 LEFT – LOOKING FROM RIGHT TO LEFT

PHOTO 22



DESCRIPTION: END ABUTMENT PEDESTAL P1 – LEFT SIDE

PHOTO 23



DESCRIPTION: END ABUTMENT PEDESTAL P1 – LEFT SIDE

PHOTO 24



DESCRIPTION: END ABUTMENT BACKWALL LEFT SIDE – LOOKING FROM RIGHT TO LEFT

PHOTO 25



DESCRIPTION: END ABUTMENT BACKWALL BAY 1 – LOOKING FROM RIGHT TO LEFT

PHOTO 26



DESCRIPTION: END ABUTMENT BACKWALL BAY 2 (TYPICAL BAY 1 AND BAY 3)

PHOTO 27



DESCRIPTION: END ABUTMENT

PHOTO 28



DESCRIPTION: END ABUTMENT NEAR CENTER – LOOKING FROM LEFT TO RIGHT

PHOTO 29



DESCRIPTION: APPROACH AT END LEFT – LOOKING FROM END TO BEGIN

PHOTO 30



DESCRIPTION: TOP OF DECK – LOOKING FROM BEGIN TO END

PHOTO 31



DESCRIPTION: SAFETY WALK RIGHT SIDE – NEAR BEGIN LOOKING FROM END TO BEGIN

PHOTO 32



DESCRIPTION: SAFETY WALK LEFT SIDE – LOOKING FROM BEGIN TO END

PHOTO 33



DESCRIPTION: FASCIA AT END LEFT – LOOKING FROM BEGIN TO END (TYPICAL)

PHOTO 34



DESCRIPTION: FASCIA AT END RIGHT (TYPICAL)

PHOTO 35



DESCRIPTION: FASCIA AT RIGHT MID SPAN –
LOOKING FROM BEGIN TO END

PHOTO 36



DESCRIPTION: FASCIA AND DECK AT BEGIN – RIGHT SIDE

PHOTO 37



DESCRIPTION: RAILING AT BEGIN RIGHT – LOOKING FROM BEGIN TO END

PHOTO 38



DESCRIPTION: DECK AT ¾ SPAN – LOOKING FROM LEFT TO RIGHT

PHOTO 39



DESCRIPTION: DECK AT BEGIN LEFT – LOOKING FROM BEGIN TO END

PHOTO 40



DESCRIPTION: DECK BAY 1 AT DIAPHRAGM D5 (TYPICAL) – LOOKING FROM BEGIN TO END

PHOTO 41



DESCRIPTION: DECK BAY 2 AT DIAPHRAGM BAY D5 (TYPICAL) – LOOKING FROM BEGIN TO END

PHOTO 42



DESCRIPTION: DECK BAY 1 AT BEGIN – LOOKING FROM BEGIN TO END

PHOTO 43



DESCRIPTION: DECK BAY 2 AT DIAPHRAGM D6 – LOOKING FROM BEGIN TO END

PHOTO 44



DESCRIPTION: FRAMING – LOOKING FROM BEGIN TO END

PHOTO 45



DESCRIPTION: GIRDER G1 AT END LEFT – LOOKING FROM END TO BEGIN

PHOTO 46



DESCRIPTION: GIRDER G5 AT MID SPAN – LOOKING FROM END TO BEGIN

PHOTO 47

DESCRIPTION:

PHOTO

ASBESTOS SAMPLING SURVEY

Asbestos Sampling Survey

Location:

BIN 1093520
Interstate Route I-690 West Bound Ramp
over Interstate Route I-481 South Bound

Prepared for:

New York State
Department of Transportation

PIN 3056.13.111

LaBella Project No. 201001

August 2001

Table of Contents

Page

I. Project Summary 1

II. Site Description 1

III. Inspection Procedures 1

IV. Results 2

Certification 2

Figures and Table

I. Project Summary

In accordance with conditions of Term Agreement D012606, LaBella Associates, P.C. conducted an asbestos sampling survey of the Interstate Route I-690 West Bound Ramp over Interstate Route I-481. Based on laboratory analyses of bulk samples collected, the following material was determined to contain asbestos:

BIN 1093520 – Interstate Route I-690 West Bound Ramp over Interstate Route I-481

Type of Material	Estimated Amount
Sheet Packing	7.8 Square Meters

II. Site Description

The Site is located in Onondaga County, New York. For the purpose of this report, the Site consists of the Interstate Route I-690 West Bound Ramp over Interstate Route I-481. (See attached FIGURE 1 - Site Location Map).

III. Inspection Procedures

The following procedures were used to obtain the data for this Report:

A. A review of record drawings supplied by Region 3 personnel and a visual inspection of the subject structure were conducted to identify potential visible/accessible sources of asbestos-containing materials. Observations and notes were made to provide a description of the structure, and an estimate of the approximate amount, length, or area of ACM present.

B. Physical or operational constraints, which might affect the removal of the ACM, were identified and reported.

C. Bulk samples of suspected ACM were collected during the site inspection of the subject structure. Samples were taken from each homogeneous area that may contain ACM.

D. Samples were submitted for analysis. Preliminary PLM analyses of NOB materials were performed by LaBella Laboratories, a NYSDOH approved laboratory, to determine the presence and percentage of asbestos in each sample. TEM analyses of NOB materials, if necessary, were performed by AMA Analytical, Inc.

E. Lab results were used to determine the approximate location, type, and amount of the verified ACM.

F. A drawing of the structure at the Site was created, in order to show sample locations and the approximate locations and amounts of confirmed ACM observed in accessible locations.

Only accessible areas were inspected. Inaccessible areas, such as areas within the bridge or the approaches to the bridge were not included in this inspection. No investigation was conducted by LaBella Associates to determine the presence of underground utilities on or in the immediate vicinity of the Site. Actual sample locations are shown in the attached FIGURE 2. Results of bulk sample analyses are tabulated in the attached TABLE.

IV. Results

BIN 1093520 – Interstate Route I-690 West Bound Ramp over Interstate Route I-481

Sheet Packing

Asbestos-containing sheet packing is located between the tops of the abutments and the deck slab at both ends of the bridge. Most of this material is presently covered by the bridge deck, although the edges of this sheet packing are exposed and visible at various locations.

It is estimated that the total amount of this asbestos-containing sheet packing material on the bridge is approximately 7.8 square meters. This estimate is based on field measurements taken at the time of the site visit. The approximate locations of this asbestos-containing sheet packing are shown in FIGURE 2.

Certification

LaBella Associates, P.C. certifies the accuracy of this report, to the best of our knowledge, based on the information collected as described in the Inspection Procedures Section of this investigation.

Figures & Table

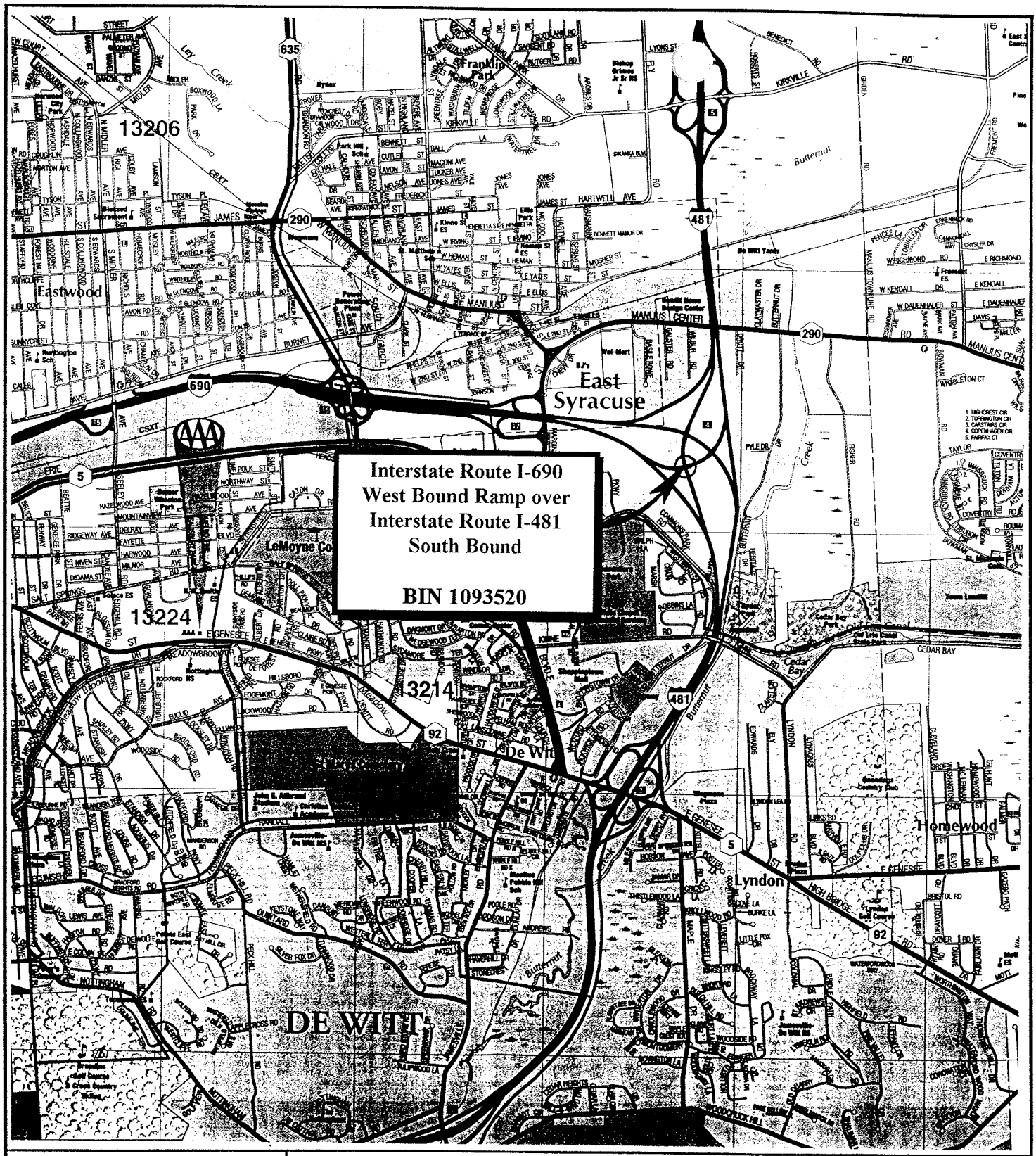

N

FIGURE 1
Site Location Map

Interstate Route I-690 West Bound Ramp over Interstate Route I-481 South Bound Onondaga County, New York

LABELLA

PROJECT NO. 201001

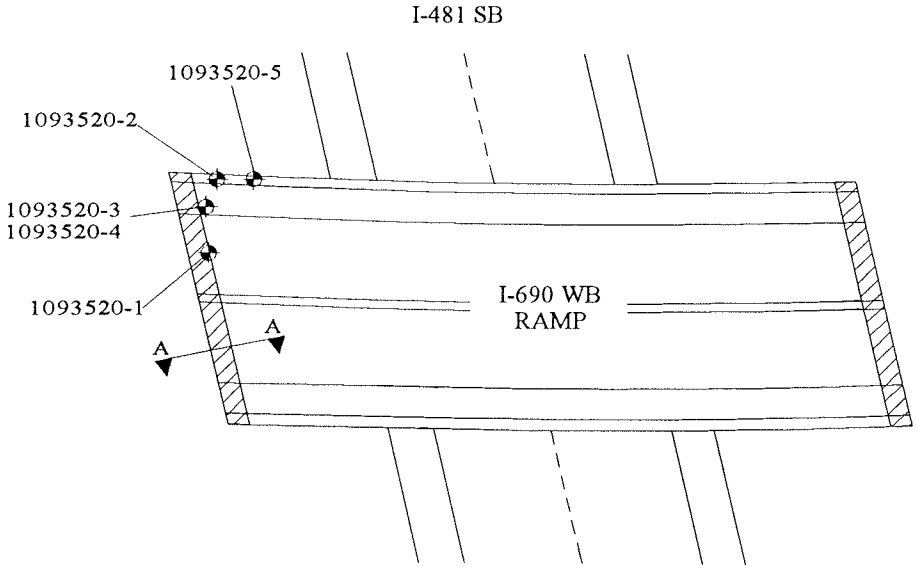

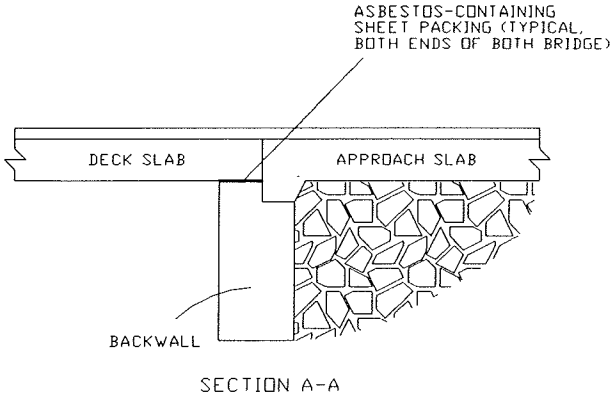

SECTION A-A

LEGEND

- 1093520-1 SAMPLE LOCATION
- ASBESTOS-CONTAINING SHEET PACKING

NORTH

PROJECT TITLE: ASBESTOS SAMPLING SURVEY
19 BRIDGES ALONG INTERSTATE I-481
ONONDAGA COUNTY, NEW YORK

PROJECT NO. 201001

PIN 3056.13.111

FIGURE TITLE: FIGURE 2 BIN 1093520
I-690 WEST BOUND RAMP OVER I-481 SB
SAMPLE LOCATIONS &
CONFIRMED ACM

NOT TO SCALE

DATE: AUGUST, 2001

Bulk Sample Results Table

Asbestos Sampling Survey
BIN 1093520
Interstate Route I-690 West Bound Ramp over Interstate Route I-481
Onondaga County, New York
LaBella Project # 201001
PIN 3056.13.111

Sample #	Sample Location	Type of Material	Results % Asbestos	Amount of Material	Specification Item No.
1093520-1	**West End of Bridge Between Deck and Abutment**	**Sheet Packing**	**37% Chrysotile**	**7.8 Square Meters**	**15202.062801 M (BV-12)**
1093520-2	West End of Bridge on I-Beam	Green Paint	None Detected	N/A	N/A
1093520-3	West End of Bridge Beneath Bearing	Bearing Pad	None Detected	N/A	N/A
1093520-4	West End of Bridge on Pedestal	Gray Masonry Coating	None Detected	N/A	N/A
1093520-5	West End of Bridge at Base of Guide Rail	Gray Caulking Compound	None Detected	N/A	N/A

HUDSON ENVIRONMENTAL SERVICES, INC.
Mail: 22 Hudson Falls Rd., So. Glens Falls, NY 12803
Delivery: 211 Ferry Blvd., So. Glens Falls, NY 12803
Phone: 518/747-1060 Fax: 518/747-1062

ANALYTICAL TEST RESULTS
N.Y.S.D.O.H. LAB ID#11140
*ANALYZED BY N.Y.S.D.O.H. LAB ID#10898

CLIENT: NYSDOT
SAMPLE DESCRIPTION: See Below
MATRIX: Solid
LOCATION: BIN 1093520
H.E.S. #: See Below

DATE SAMPLED: 04/07/03
TIME SAMPLED: 10:45 AM
DATE SAMPLE RECD: 04/14/03
TYPE SAMPLE: Grab
SAMPLER: G.Cook/NYSDOT

NOB BULK MATERIAL ANALYSIS FOR ASBESTOS

HES LAB ID#: 030414K	K01	K02	K03
LAB ID#: E03	922	923	924
CLIENT: SAMPLE ID/DESCRIPTION	1093520-01 G1, at 1/4 Point from beg	1093520-02 G3, 5m from beg	1093520-03 G5, 1/4 Point from Beg
COLOR	Green	Green	Green
HOMOGENEOUS(YES/NO)	Yes	Yes	Yes
ORGANIC %	49	51	51
ACID-SOLUBLE INORGANICS %	10	10	6
INSOL NON-ASBESTOS INORGANIC %	41	39	43
ASBESTOS ANALYSIS			
CHRYSOTILE %			
AMOSITE %			
CROCIDOLITE %			
OTHER AMPHIBOLE %			
TOTAL ASBESTOS % (PLM)	ND	ND	ND
ASBESTOS ANALYSIS			
TYPE OF ASBESTOS			
PERCENTAGE OF ASBESTOS (TEM)	ND	ND	ND
TOTAL	100	100	100

Approval By: MLS
Date: 4/23/03

Hudson Environmental Services, Inc. certifies that the services provided were performed in accordance with the New York State Department of Health, Environmental Laboratory Approval Program certification manual. In the event of an error, HES's sole responsibility will be to perform reanalysis at its own expense. HES, Inc. assumes no other liability for damages incurred from the interpretation or use of the analysis provided.

(OVER)

HUDSON ENVIRONMENTAL SERVICES, INC.

Mail: 22 Hudson Falls Road, South Glens Falls, NY 12803
Delivery: 211 Ferry Blvd., South Glens Falls, NY 12803
Phone: 518/747-1060 Fax: 518/747-1062

CHAIN OF CUSTODY RECORD/ Lab Work Request

Client NYS Dept. of Transportation-Region 3
Client Contact/Person # Christopher Anderson
Project Location B.I.N.
Purchase Order
HES Contact William Frawley

Mail Address NYS Dept. of Transportation
333 E. Washington Street
Syracuse, NY 13202
Phone # (315) 428-4628

HES Use Only Lab ID	Sample ID / Description	Date Collected	TIME A=a.m. P=p.m.		SAMPLE TYPE C=Composite G=Grab MATRIX	C	G	# Conts.	ANALYSIS REQUIRED
K01	1093520-01; G, AT 1/4 point Span Beg			A P	SO		X	1	Asbestos Bulk - NOB
K02	1093520-02; G3, 5m from Beg			A P	SO		X	1	" " "
K03	1093520-03; G5, 1/4 point from Beg			A P	SO		X	1	" " "
				A P					
				A P					
				A P					
				A P					

Matrix: SO - Soil, SE - Sediment, SL - Sludge, O - Oil, DW - Drinking Water, GW - Ground Water, SW - Surface Water, L - Leachate, A - Air, W - Wipe, DS - Drum Solids, DL - Drum Liquids, X - Other, WW - Waste Water

Special Instructions: Bridge coating - If PLM negative, TEM confirmation on all.

Sampled by: (Signature)	Date/Time 04/1/03, 10:45	Received by: (Signature)	Date/Time 4-16-03 12:30pm
Relinquished by: (Signature)	Date/Time	Received by: (Signature)	Date/Time
Relinquished by: (Signature)	Date/Time	Received by: (Signature)	Date/Time
Relinquished by: (Signature)	Method of Shipment:		Date/Time
Relinquished to Laboratory	Date/Time 4/14/03 2:00PM	Turnaround Time: Normal	Lab Approval:

WHITE - Lab Copy YELLOW - Sampler Copy PINK - Generator Copy

HES Use Only

Samples Were: 1. Shipped or Hand Delivered NOTES:

2. Ambient or Chilled NOTES:

3. Received Broken/ Leaking (Improperly Sealed) Y N NOTES:

4. Properly Preserved NOTES: Y N

5. Received Within Holding Times Y N NOTES:

COC Tape Was: 1. Present on Outer Package Y N

2. Untroken on Outer Package Y N

3. Present on Sample Y N

4. Untroken on Sample NOTES: Y N

COC Record Was: 1. Present upon Receipt of Samples Y N

Discrepancies Between Sample Labels and COC Record? Y N NOTES:

Apr-18-03 11:23A Ver. Kukreja, Ph.D. P.05

LATEST BIENNIAL INSPECTION REPORT

Inspection Date: 5/30/2013 RC: 33 BIN: 1093520

Bridge Ratings

Carried: 690I EB to 481I N Crossed: 481I 481I33012061 CheckValue: 1,819,477,673

Inspection Agency: 10 - NYSDOT Type of Inspection: 1 - BIENNIAL
GTMS: 302 -- Steel - Stringer/Multi-Beam or Girder
POSTINGS: See Gen Rec Page 1 for Postings at time of inspection.
Further Investigation Needed: No
State Highway Number: 70-7 Milepoint: 0.27 AADT/Yr: 8559 / 1996
Orientation: 2 - Northeast Political Unit: 0233 - Town of DEWITT Year Built: 1972
Total Spans: 1 Ramp Bridge Attached To Span: NA BIN: NA
General Recommendation: 5 Computed Condition Rating: 5.063

Abutment Ratings:	Beg Abut	End Abut
Joint with Deck	8	4
Bearings, Bolts, Pads	5	5
Seats and Pedestals	6	6
Backwall	4	4
Stem (Breastwall)	5	5
Erosion or Scour	5	5
Footings	9	9
Piles	9	9
Recommendation	5	5

Wingwall Ratings:	Beg Abut	End Abut
Walls	5	5
Footings	9	9
Erosion or Scour	6	5
Piles	8	8

Channel Ratings:	Channel
Stream Alignment	8
Erosion and Scour	8
Waterway Opening	8
Bank Protection	8

Approach Ratings:	Approaches
Drainage	4
Embankment	5
Settlement	5
Erosion	5
Pavement	5
Guide Railing	5

Number of Flags Issued:

RED: 0 Yellow: 0 Safety: 0

Vulnerability Reviews Recommended: 1=Yes, 2=No, 3=NA, X=NotActive

Hydraulic: 3	Overload: X	Steel: 2
Collision: 2	Concrete: X	Seismic: X

Inspector's Signature: CheckValue: 1,819,477,673 Date: 5/30/2013

Signed copy of this inspection report is available in the appropriate NYSDOT Regional Office

Peter Riehlman,PE () (Inspector ID:3000052)

Reviewed By: Date: 7/10/2013

Signed copy of this inspection report is available in the appropriate NYSDOT Regional Office

James R. Manning,PE () (QC ID:3000023)

Inspection Date: 5/30/2013 RC: 33 BIN: 1093520

Span Ratings

Carried: 690I EB to 481I N Crossed: 481I 481I33012061 CheckValue: 1,819,477,673

Deck Element Ratings:	001
Wearing Surface	5
Curbs	5
Sidewalks, Fascias	5
Railings, Parapets	5
Scuppers	8
Gratings	8
Median	8
Mono Deck Surface	5

Superstructure Ratings:	001
Structural Deck	4
Primary Members	6
Secondary Members	6
Paint	5
Joints	8
Recommendation	5

Pier Ratings:	001
Bearings, Bolts, Pads	8
Pedestals	8
Top of Cap or Beam	8
Stem Solid Pier	8
Cap Beam	8
Pier Columns	8
Footings	8
Erosion or Scour	8
Piles	8
Recommendation	8

Utility Ratings:	001
Lighting	8
Sign Structure	8
Utilities and Support	8

Field Notes:

Field Date	Arrival	Departure	Temp (C)	Temp (F)	Weather Conditions
5/3/2013	9:00:00 AM	11:45:00 AM		50	ptly. cldy.
5/30/2013	11:00:00 AM	12:15:00 PM		80	ptly. cldy.

Inspection Date: 5/30/2013 RC: 33 BIN: 1093520

Inspection Notes

Carried: 690I EB to 481I N Crossed: 481I 481I33012061 CheckValue: 1,819,477,673

Note ID: 331310935200003

Beg Abut -- Abutment: Backwall -- Rated 4, Was 4
Referenced Photos: "2"
2013 - Bridge is superelevated to the left which directs water over that edge of the bridge resulting in localized spalls on both backwalls in upper left corners. At the begin left it has been roughly patched. At the end the spall is 4"H by 24"W by 3"D.

Note ID: 331310935200000

Approaches: Drainage -- Rated 4, Was 5
Referenced Photos: "4", "6", "7"
2013- Vegetation and sand buildup at the end left and beg left.

Note ID: 331310935200002

Approaches: Erosion -- Rated 5, Was 4
Referenced Photos: "4"
2013 - The begin left has an erosion gully that has been parially filled in with stone. The end of the stone placement still has a gully approx. 10' wide by 3' deep but im upgrading to a 5

Note ID: 331310935200001

Span 001 -- Superstructure: Structural Deck -- Rated 4, Was 4
Referenced Photos: "5"
2013 - The deck has several hairline mapcracks throughout underneath. The worst area of deck is bay 1 begin and end. There are approx. 1.5' areas of hollow and delaminated areas of deck. There looks to be previous cores taken on top of deck.

Note ID: 331310935200006

Span 001 -- Superstructure: Paint -- Rated 5, Was 5
Referenced Photos: "8", "9"
2013 -Both outside fascia beams flanges are rusting and some minor rusting of lower flanges on interior beams.rate 5

Note ID: 331310935200005

End Abut -- Abutment: Joint with Deck -- Rated 4, Was 4
Referenced Photos: "1"
2013 - The end joint has a few holes in the joint filler and the concrete headers are cracked and spalling.

Note ID: 331310935200004

End Abut -- Abutment: Backwall -- Rated 4, Was 4
Referenced Photos: "3"
2013 - Bridge is superelevated to the left which directs water over that edge of the bridge resulting in localized spalls on both backwalls in upper left corners. At the begin left it has been

Inspection Date: 5/30/2013 RC: 33 BIN: 1093520

Inspection Notes

Carried: 690I EB to 481I N Crossed: 481I 481I33012061 CheckValue: 1,819,477,673

Note ID: 331310935200004 - continued

roughly patched. At the end the spall is 4"H by 24"W by 3"D.

Inspection Date: 5/30/2013 RC: 33 BIN: 1093520

Inspection Photos in Photo Number Order

Carried: 690I EB to 481I N **Crossed: 481I 481I33012061** **CheckValue: 1,819,477,673**

End joint looking Rt



Photo Number: 1 Photo Filename: DSCN0397.jpg

Beg Lt backwall



Photo Number: 2 Photo Filename: DSCN0405.jpg

Inspection Date: 5/30/2013 RC: 33 BIN: 1093520

Inspection Photos in Photo Number Order

Carried: 690I EB to 481I N Crossed: 481I 481I33012061 CheckValue: 1,819,477,673

End Lt backwall



Photo Number: 3 Photo Filename: DSCN0400.jpg

Beg Lt appr drainage gulley



Photo Number: 4 Photo Filename: DSCN0402.jpg

Inspection Date: 5/30/2013 RC: 33 BIN: 1093520

Inspection Photos in Photo Number Order

Carried: 690I EB to 481I N **Crossed: 481I 481I33012061** **CheckValue: 1,819,477,673**

Bay 1 deck looking toward End



Photo Number: 5 Photo Filename: DSCN0395.jpg

Location:
End Lt appr sand berm



Photo Number: 6 Photo Filename: DSCN0396.jpg

Inspection Date: 5/30/2013 RC: 33 BIN: 1093520

Inspection Photos in Photo Number Order

Carried: 690I EB to 481I N **Crossed: 481I 481I33012061** **CheckValue: 1,819,477,673**

Location:
Beg Lt appr sand berm



Photo Number: 7 Photo Filename: DSCN0401.jpg

Framing looking toward Beg Rt



Photo Number: 8 Photo Filename: DSCN0393.jpg

Inspection Date: 5/30/2013 RC: 33 BIN: 1093520

Inspection Photos in Photo Number Order

Carried: 690I EB to 481I N **Crossed: 481I 481I33012061** **CheckValue: 1,819,477,673**

Location:
Lt fascia girder paint looking toward Beg



Photo Number: 9 Photo Filename: DSCN0398.jpg

No Photo

Inspection Date: 5/30/2013 RC: 33 BIN: 1093520

Inspection Sketches in Sketch SysID Order

Carried: 690I EB to 481I N **Crossed: 481I 481I33012061** **CheckValue: 1,819,477,673**

Sketch ID: 331310935200000 **Sketch Filename: LdRatNCL.13**

General Sketch for Bridge
Referenced Photos:

Region 3 LoadRatingFieldCheckForm

NYSDOT BRIDGE INSPECTION REPORT			
SHEET	1	OF	1

LOAD RATING FIELD CHECK FORM

BIN:	1093520	Insp. Date:	05/14/2013

Dead Load - Note Changes since Last load Rating or state "NONE":

NONE

Section Loss -Note Changes since Last load Rating or state "NONE":

NONE

Additional Notes:

NONE

Attachments:

Team Leader: Peter Riehlman

Inspection Date: 5/30/2013 RC: 33 BIN: 1093520

Inspection Sketches in Sketch SysID Order

Carried: 690I EB to 481I N Crossed: 481I 481I33012061 CheckValue: 1,819,477,673

Sketch ID: 331310935200001 Sketch Filename: deck sketch.tif

Span 001 -- Superstructure: Structural Deck -- Rated 4, Was 4
Referenced Photos: "5"

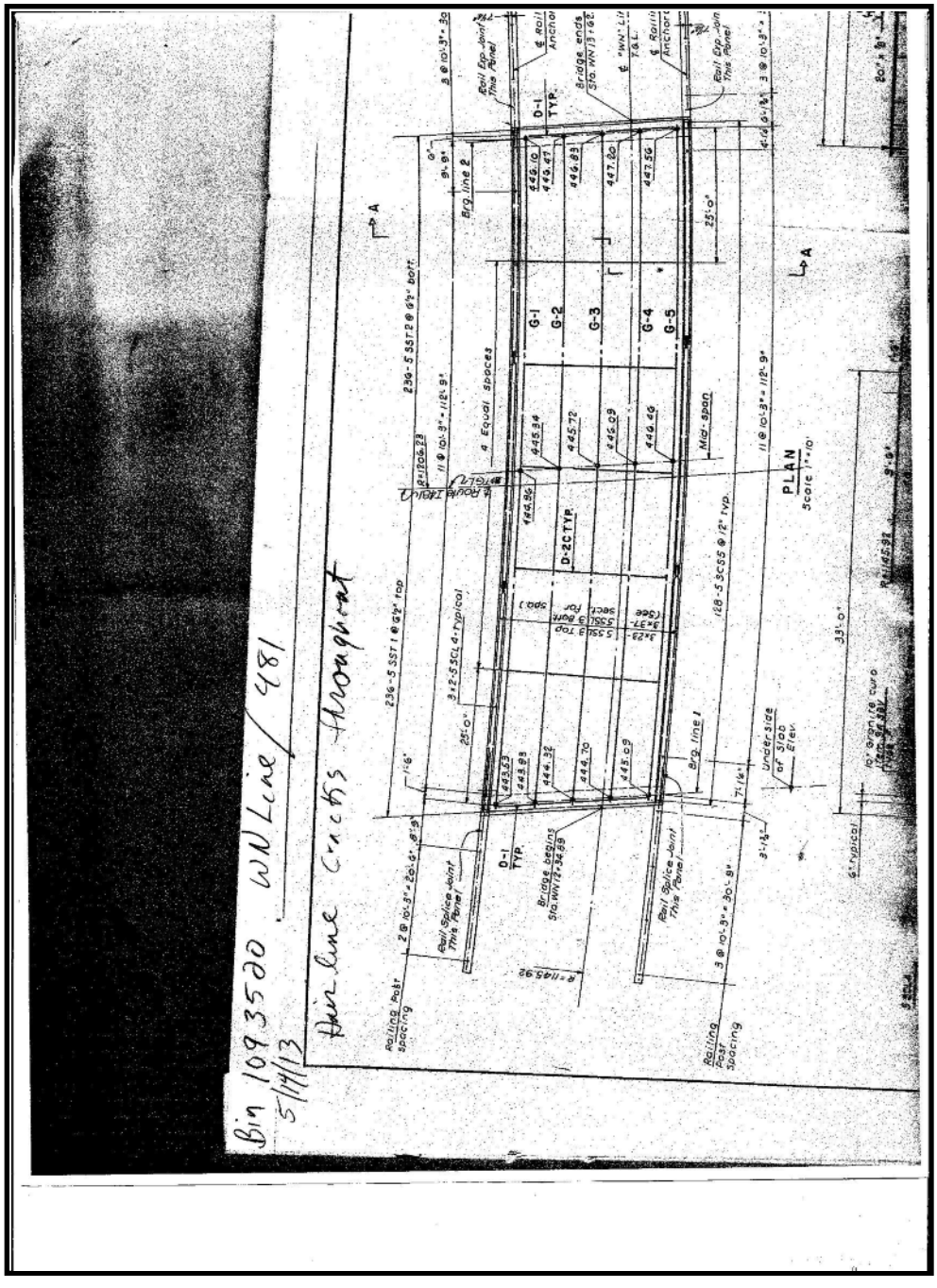

Inspection Date: 5/30/2013 RC: 33 BIN: 1093520

Gen. Rec., Postings, Federal Ratings, etc.

Carried: 690I EB to 481I N Crossed: 481I 481I33012061 CheckValue: 1,819,477,673

Overall Condition:

GENERAL RECOMMENDATION: 5

Computed Condition Rating: 5.063

Problems Requiring Action:

NO Further Investigation Needed

NO Flags Issued

POSTINGS:

Inspector Confirmed existing Posting data as correct.
Posted Vertical Clearance ON the bridge is: No Posting
Posted Vertical Clearance UNDER the bridge is: No Posting
No Load Restriction is posted on this bridge

Overloads Observed:

NO Overload Vehicles were observed on this bridge

FEDERAL RATINGS:

NBI Deck Condition: 6
NBI Superstruct Condition: 7
NBI Substruct Condition: 6
NBI Channel Condition: N
NBI Culvert Condition: N

Diving Inspection Needs:

Diving Inspection Required? No Date of Last Diving Inspection: No Date

Inventory Problems:

Inventory Problems Exist? No

Miscellaneous:

Time Required to Inspect Bridge: 4 Hours

Lane Closure Needs: By Contract for 2 Hours

No Railroad Flagging Required

No Pedestrian Fence

There is a Snow Fence present

The BIN Plate is in OK condition

Inspection Date: 5/30/2013 RC: 33 BIN: 1093520

Gen. Rec., Postings, Federal Ratings, etc.

Carried: 690I EB to 481I N **Crossed: 481I 481I33012061** **CheckValue: 1,819,477,673**

Special Emphasis Inspection Required:

Non-Redundant/Fracture Critical Members - No
Pin and Hangers - No
Fatigue-Prone Welds - Yes
Non-Categorized Fatigue-Prone Details - No
Other (Specified in Text) - No

Special Emphasis Details:

Gusset plate welds - 100% hands-on inspection, never exempt due to being curved girders.

General Notes To the Next Inspector:

Bin plate on begin abutment.

Improvements Observed:

Inspection Date: 5/30/2013 RC: 33 BIN: 1093520

Review Progress and Personnel Present at Inspection

Carried: 690I EB to 481I N Crossed: 481I 481I33012061 CheckValue: 1,819,477,673

Inspection Submission Status:

Submitted to QC Engineer on: 7/9/2013
QC Submission Number: 35330602

QC Review Completed: 7/10/2013
QC Engineer: James R. Manning

Submitted to Liaison Engineer on: 7/10/2013
Liaison Submission Number: 53314

Liaison Review Completed: 7/11/2013
Liaison Engineer: TODD M. HERMANN

Submitted for BIIS Processing on: 7/11/2013
BIIS Submission Number: .kp1

Current Status: Keypunched, Sent to BIIS
Check Value: 1,819,477,673

Personnel Present During Inspection:

Peter Riehlman	- Team Leader
Rebecca Maurer	- Assistant Team Leader
Charlie Miller	- lane closure
Anthony Nordland	- lane closure
Paul Russell	- lane closure

Inspection Date: 5/30/2013 RC: 33 BIN: 1093520

Inspection Access Requirements

Carried: 690I EB to 481I N Crossed: 481I 481I33012061 CheckValue: 1,819,477,673

Equipment Required for Inspection

Access Requirement Changes WERE Noted During This Inspection.
This Listing is from the Inspection.

ACCESS CATEGORIES FOR ENTIRE BRIDGE
Required: Walking, Small Lift, Lane Closure, Shadow Vehicle

ACCESS CATEGORIES FOR SPAN 1
Required: Walking, Small Lift, Lane Closure, Shadow Vehicle

Inspection Date: 5/30/2013 RC: 33 BIN: 1093520

Culvert Measurements

Carried: 690I EB to 481I N **Crossed: 481I 481I33012061** **CheckValue: 1,819,477,673**

Culvert Measurements

NO CULVERT DATA FOR BIN 1093520

Standard Photos **RC: 33 BIN: 1093520**

Carried: 690I EB to 481I N Crossed: 481I 481I33012061

1093520_LOCATION_MAP.JPG

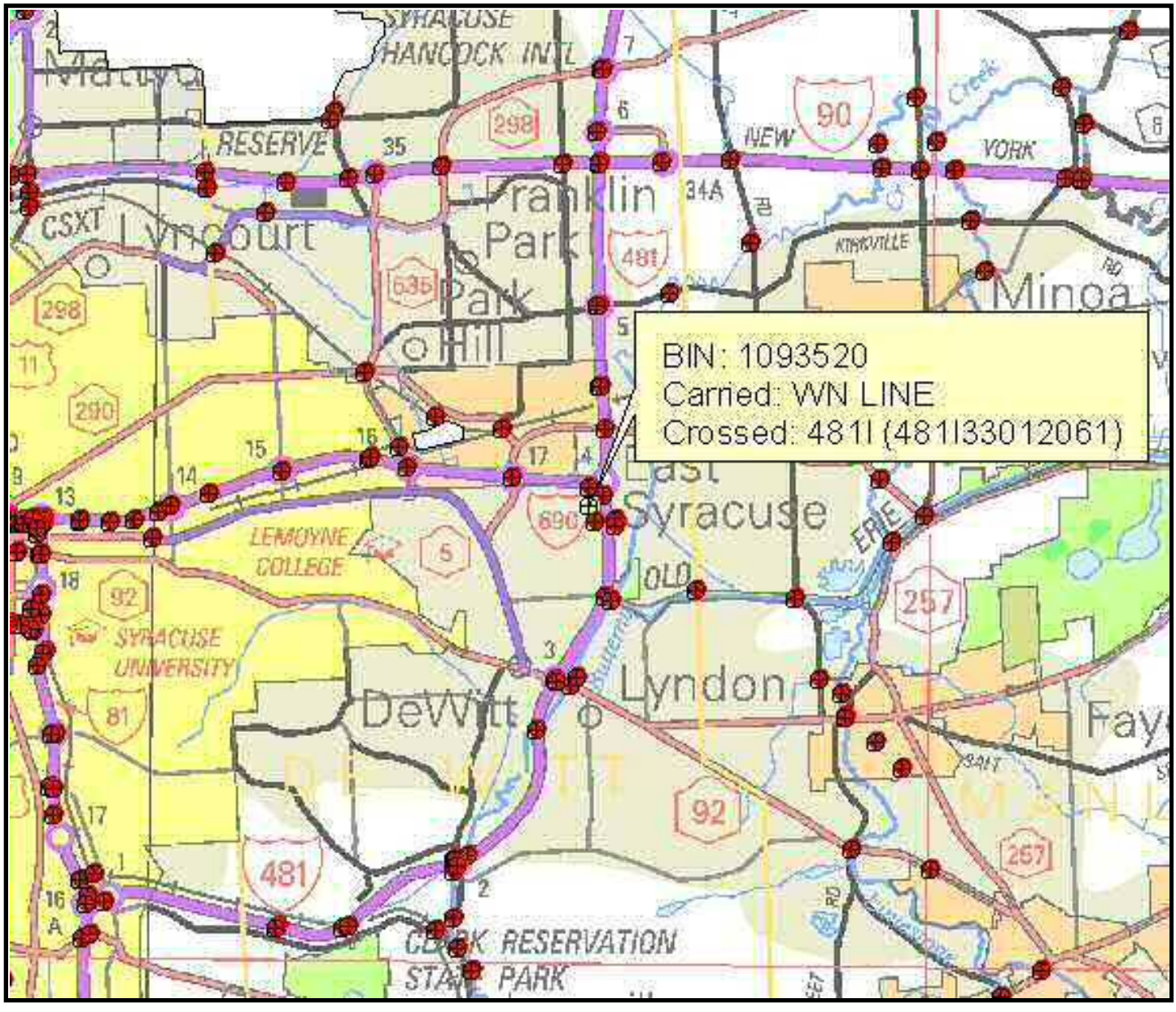

Standard Photos RC: 33 BIN: 1093520

Carried: 690I EB to 481I N Crossed: 481I 481I33012061

1093520_QUAD_MAP.JPG

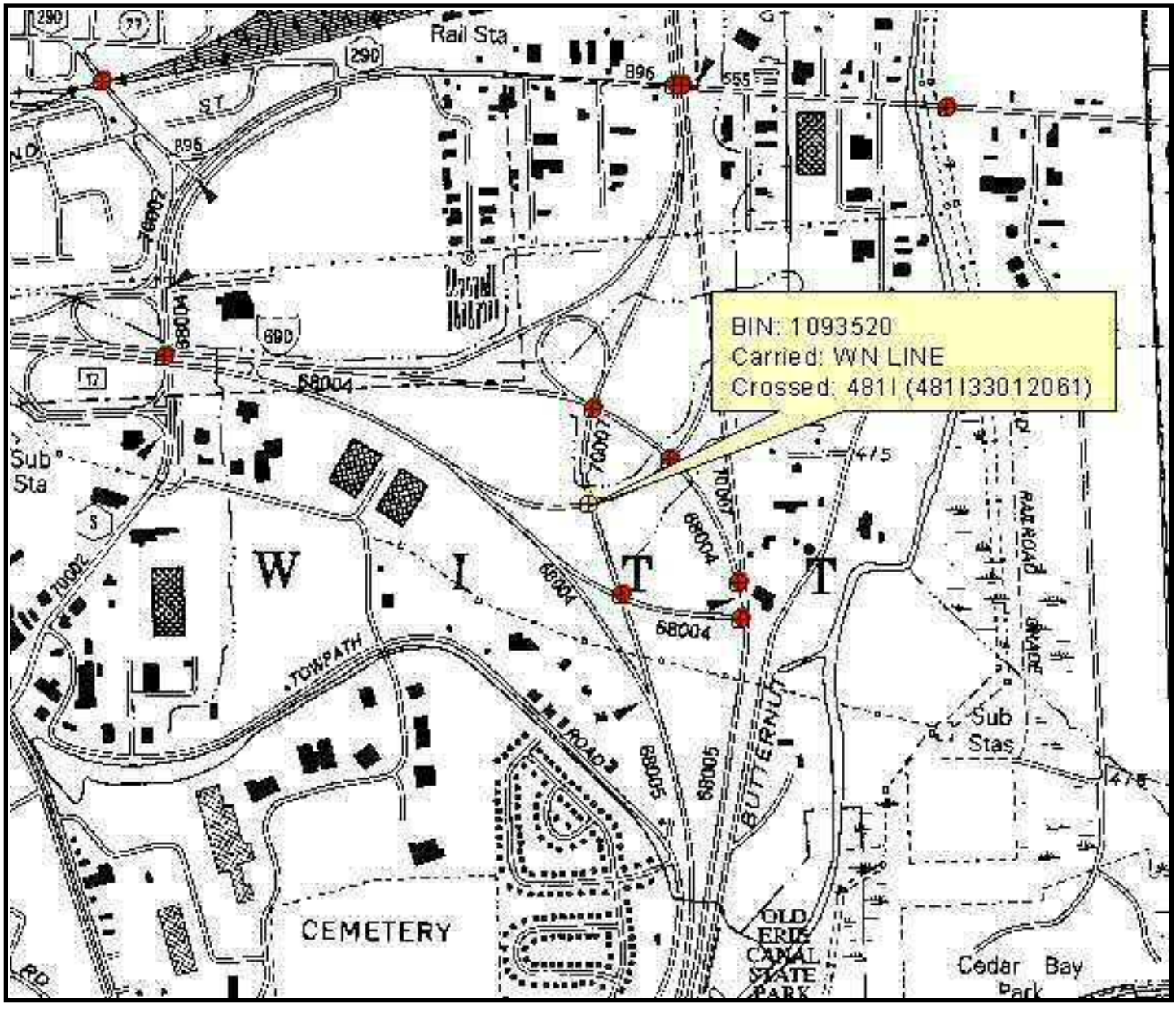

BeginAbutment11.jpg



Standard Photos **RC: 33 BIN: 1093520**

Carried: 690I EB to 481I N **Crossed: 481I 481I33012061**

BeginApproach11.jpg



Standard Photos **RC: 33 BIN: 1093520**

Carried: 690I EB to 481I N **Crossed: 481I 481I33012061**

EndApproach11.jpg



Standard Photos **RC: 33 BIN: 1093520**

Carried: 690I EB to 481I N **Crossed: 481I 481I33012061**

EndRightWingwall11.jpg

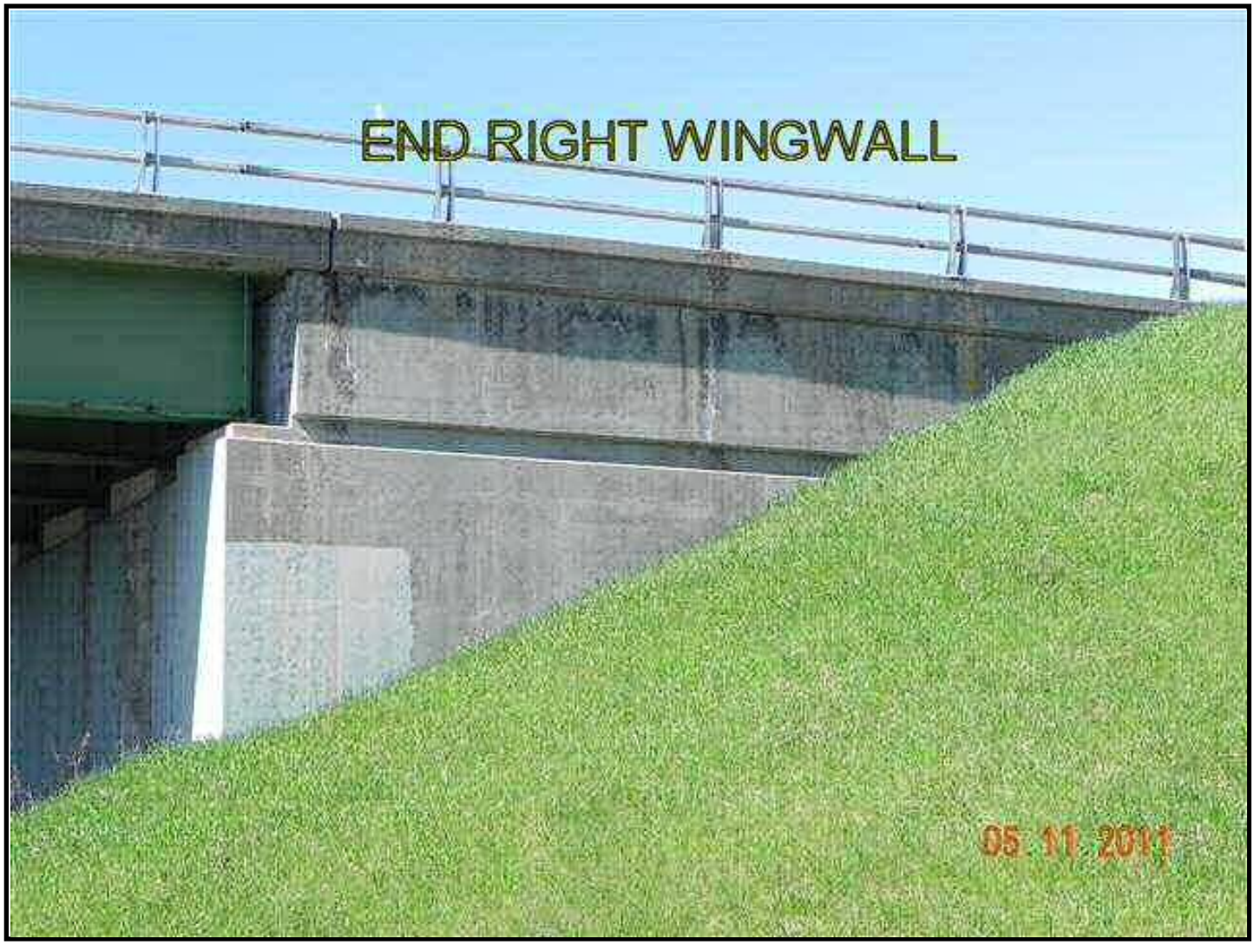

Standard Photos **RC: 33 BIN: 1093520**

Carried: 690I EB to 481I N **Crossed: 481I 481I33012061**

F2Left11.jpg



Standard Photos **RC: 33 BIN: 1093520**

Carried: 690I EB to 481I N **Crossed: 481I 481I33012061**

F2Right11.jpg



Standard Photos **RC: 33 BIN: 1093520**

Carried: 690I EB to 481I N **Crossed: 481I 481I33012061**

RightElevation11.jpg



Underside11.jpg



LEVEL 1 LOAD RATING SUMMARY SHEET

Region/County Region 3/Onondaga BIN 1093520
Feature(s) Carried and Crossed I-690 EB RAMP TO I-481 NB/I-481 SB
Date of field inspection upon which Level 1 rating is based 1/22/2014

OVERALL BRIDGE RATINGS (BASED ON LOWEST RATED ELEMENTS):

Total number of rating units 1

	H inventory	H operating	HS inventory	HS operating
Rating	H 33.32 (tons)	H 55.54 (tons)	HS 56.16 (tons)	HS 93.6 (tons)
Lowest rated element	Exterior Girder G5	Exterior Girder G5	Exterior Girder G5	Exterior Girder G5

Analysis method LFR Comments

Individual Rating Unit Level 1 values:

Rating unit span(s) 1

Main member ratings

	H inventory	H operating	HS inventory	HS operating
Rating	H (tons)	H (tons)	HS (tons)	HS (tons)
Lowest rated element				

Analysis method Comments

Floorbeam ratings

	H inventory	H operating	HS inventory	HS operating
Rating	H (tons)	H (tons)	HS (tons)	HS (tons)
Lowest rated element				

Analysis method Comments

Stringer ratings

	H inventory	H operating	HS inventory	HS operating
Rating	H 33.32 (tons)	H 55.54 (tons)	HS 56.16 (tons)	HS 93.6 (tons)
Lowest rated element	Exterior Girder G5	Exterior Girder G5	Exterior Girder G5	Exterior Girder G5

Analysis method LFR Comments

Certified by Date

Quality Control Engineer Signature Date
Agency or Company represented by certifier

Note:
-If connection ratings govern, record them under stringer ratings for stringer – floorbeam connection, floorbeam ratings for floorbeam-main member connections, etc.
-When Level 1 results indicated the need for load posting or other corrective action, the NYSDOT Regional Structures Engineer shall be notified immediately.
-Load ratings should be filed in the regional office within 60 days of completion of calculations.
-Bridges shall be flagged based on Level I results in accordance with the current NYSDOT flagging procedure.
-Bridge load posting, closure, etc. determinations shall be made as results are being produced.

PARSONS

100 Broadway
New York, NY 10005
Phone: 212-266-8300
Fax: 212-571-6825
www.parsons.com

TECHNICAL MEMORANDUM

FROM: Kian Siang Chau, P.E
NYSPE 082744

DATE: APRIL 2, 2014

RE: SEISMIC SCREENING SUMMARY
NEW YORK STATE DEPARTMENT OF TRANSPORTATION
D031085; PIN 3501.60; I-81

BIN: 1093520 (I-690 EB / I-481 SB)

This memorandum summarizes the seismic screening conducted for BIN 1093520 as part of the Interstate 81 Project in Syracuse, NY. The purpose of the screening is to determine if seismic retrofits are warranted at the superstructure to substructure connection, and if further seismic evaluation of the structure is required. This memorandum will give the screening results, retrofits required and recommendations for further seismic evaluation of the structure.

SCREENING PROCEDURE

The seismic screening was performed in accordance with the FHWA Seismic Retrofitting Manual for Highway Structures: Part 1 - Bridges, January 2006. As per the referenced manual, seismic screenings were performed for both lower level and upper level earthquake ground motion. The lower level earthquake ground motion has a reasonable likelihood of occurrence within the life of the bridge (50% probability of exceedance within a 75 year bridge life). The upper level earthquake ground motion has a finite likelihood of occurrence within the life of the bridge (7% probability of exceedance within a 75 year bridge life).

Values for the spectral acceleration for the Syracuse area used in the screening are as follows:

- Lower Level Earthquake Ground Motion for a Short Period (0.2 seconds): $S_S = 0.0251$
- Lower Level Earthquake Ground Motion for a Long Period (1.0 seconds): $S_1 = 0.0076$
- Upper Level Earthquake Ground Motion for a Short Period (0.2 seconds): $S_S = 0.139$
- Upper Level Earthquake Ground Motion for a Long Period (1.0 seconds): $S_1 = 0.047$

These values are considered constant and are the same for all seismic screenings of bridges in the Syracuse area.

The Site Class is based on the soil conditions at the bridge location. It was determined that this parameter has little effect on the results of the seismic screening because the spectral acceleration values for the Syracuse area are small. Based on this, a site class of D was used for all seismic screenings of bridges in the Syracuse area.

Bridge parameters used in the seismic screening were retrieved from the record drawings and WinBolts data.

The seismic screening takes into account the anticipated service life, importance, and the seismic exposure of the bridge to determine a seismic retrofit category (SRC). The SRC is then used to determine seismic evaluation methods and retrofit measures. There are four SRCs, A through D. Seismic retrofit category A is the lowest category; bridges in this category do not require retrofits or further seismic evaluation. Seismic retrofit category D is the highest category; bridges in this category requiring the most rigorous seismic evaluations and retrofits.

SCREENING RESULTS

The SRC for the bridge is "**C**" for lower level earthquake ground motion and "**B**" for upper level earthquake ground motion.

RETROFITS REQUIRED

No seismic retrofits are required for the bridge superstructure to substructure connection.

RECOMMENDATIONS FOR FURTHER SEISMIC EVALUATION

No further seismic evaluation is required for lower level earthquake ground motion. For the upper level earthquake ground motion, it is recommended that the capacities of the bearings are checked as per Section 5.2 of the referenced manual.

Retrofit cost estimates will be provided after any further required seismic evaluations are completed.

PARSONS

100 Broadway
New York, NY 10005
Phone: 212-266-8300
Fax: 212-571-6825
www.parsons.com

TECHNICAL MEMORANDUM

FROM: Kian Siang Chau, P.E
NYSPE 082744

DATE: JANUARY 26, 2015

RE: FATIGUE EVALUATION
NEW YORK STATE DEPARTMENT OF TRANSPORTATION
D031085; PIN 3501.60; I-81

BIN: 1093520 (I-690 Eastbound Ramp / I-481 Southbound)

This memorandum documents a fatigue evaluation conducted for the existing Interstate 81 Viaduct Project. Existing structures with AASHTO Category D, E, and E' fatigue-prone details require 100% hands-on inspection unless proven to be exempt. The purpose of the evaluation is to assess the remaining life of fatigue-prone components.

EVALUATION PROCEDURES

The fatigue evaluation was performed in accordance with the AASHTO Guide Specification for Fatigue Evaluations of Existing Steel Bridges, 1990. Fatigue-prone welds identified in the biennial inspection reports were located on record drawings and confirmed visually in the field. Additional information concerning fatigue-prone welds located in BIN folders was also obtained and reviewed prior to inspection.

EVALUATION RESULTS

The results of the fatigue evaluation of the existing bridge are shown below. The remaining safe fatigue life of the fatigue components has been **exhausted.**

Fatigue Detail Location	Remaining Safe Fatigue Life (Years)	Remaining Mean Fatigue Life (Years)
Interior Girders, Gusset plate welds	55.27	391.74
Exterior Girders, Gusset plate welds	-8.60	77.46

BRIDGE DECK EVALUATION REPORT

RECOMMENDATIONS

The bridge deck inspection findings and evaluation are used as a tool for developing the scope of work and cost estimates for the development and comparison of alternatives for the overall project.

The total damaged area of the deck is 1.5% of the top and 0.4% of the underside of the deck area. The cores indicate the reinforcement steel is 4.25 inches to 4.5 inches below the surface of the deck. The lab test indicate that chloride ion concentrations at all the sample locations are significantly higher than the corrosion threshold for steel.

Due to the age, condition and high chloride ion content of the bridge deck concrete, the bridge deck should be rehabilitated or replaced to meet the current standards and to mitigate excessive future maintenance costs.

ALTERNATIVES

- Rehabilitation Alternative - 2 inches Bonded Concrete Overlay
  - Scope

    The scope of this alternative will include the complete removal of the bridge railings, curb and safety walks, and fascias to the level of the original top of the deck. The lower portion of the fascia or deck soffit is in better condition and only partial removal of damaged areas is necessary. The joint will be removed. The top 2 inches of the entire deck will be removed and areas of deteriorated concrete must be removed to at least 1 inch below the level of the reinforcement steel and to the horizontal and vertical limit of any detectable hollow areas. Damaged areas at the underside of the deck will require full depth reconstruction. Any corrosion of the reinforcement steel will be sandblasted or hydro-blasted. Reinforcement with significant section loss will be replaced. Partial and full depth removal areas will be reconstructed to adjacent grade. The proposed deck overlay will be a 2 inches thick bonded concrete overlay yielding a nominal 9.5 inches standard thickness deck. A new single-sloped concrete barrier and a new armorless joint will be installed. The Level 1 Load Rating for the final condition was found to be acceptable.

- Useful Life Expectancy

  The removal of the top 2 inches of the existing deck will be removed. It can be anticipated that chloride ions will continue to migrate into the remaining deck to the reinforcing steel resulting in further corrosion-related deterioration of the deck surface. Concrete admixtures will be included in the bonded concrete overlay to impede the continued penetration of chloride into the deck from the surface. This alternative will result in an extended useful life expectancy estimated at 20 years.

The design life of the project is 30 years (ETC + 30). This alternative does not meet the project objectives of obtaining 30 years of service life and is not evaluated further.

- Rehabilitation Alternative – 100% Deep Removal and Partial Deck Reconstruction
  - Scope

    The scope of this alternative will include the complete removal of the bridge railings, curb and safety walks, and fascias to the level of the original top of the deck. The lower portion of the fascia or deck soffit is in better condition and only partial removal of damaged areas is necessary. The joint will be removed. The scope of this alternative will include partial depth reconstruction with removal of the concrete to at least 1 inch below the top mat of the reinforcement steel. Additionally, any further areas of deteriorated concrete detected will require full depth removal. Any corrosion of the reinforcement steel will be removed by sandblasting or hydro-blasting. The proposed deck partial reconstruction will be a nominal 6.5 inches thick concrete deck yielding a 9.5 inches standard thickness deck. A new single-sloped concrete barrier and a new armorless joint will be installed. The Level 1 Load Rating for the final condition was found to be acceptable.
  - Useful Life Expectancy

    This alternative will provide a useful life expectancy is estimated at 35 years.
  - Cost Estimate

    The estimated cost for this alternative is $426,000. The Engineer's Opinion of Probable Construction Cost worksheet is at the end of this section.

- Replacement Alternative – Cast-In-Place Concrete
  - Scope

    This scope of this alternative will include the complete demolition of the existing bridge deck, railings, curb and safety walks, fascias and bridge joint. The bridge deck will be replaced with a new 9.5 inches standard thickness concrete deck. A new single-sloped concrete barrier and a new armorless joint will be installed. The Level 1 Load Rating for the final condition was found to be acceptable.
  - Useful Life Expectancy

    This alternative will provide a useful life expectancy is estimated at 40+ years.
  - Cost Estimate

    The estimated cost for this alternative is $494,000. The Engineer's Opinion of Probable Construction Cost worksheet is at the end of this section.

- Replacement Alternative – Pre-cast Concrete Deck Panels
  - Scope

    The scope of this alternative is similar to the Cast-In-Place Concrete Deck Replacement Alternative except the deck structure will be precast panels. This alternative offers reduced construction time over conventional construction.
  - Useful Life Expectancy

    This alternative will provide a useful life expectancy is estimated at 40+ years.
  - Cost Estimate

    The comparison of accelerated construction to conventional construction is beyond the current scope of this evaluation.

IN-DEPTH INSPECTION REPORT

D031085 P.I.N. 3501.60

ELEMENT SPECIFIC BRIDGE WORK

B.I.N. 3/3 1093530

TEAM LEADER George H Stam, P.E. 056216
NYSPE LICENSE #

ASSISTANT TEAM LEADER Timothy Olmstead

FEATURE CARRIED I-481 Southbound

FEATURE CROSSED I-481 NB to I-690 WB Ramp

DATE FIELD WORK BEGAN 1/14/14

DATE FIELD WORK COMPLETED 1/16/14

TABLE OF CONTENTS

- STRUCTURE IDENTIFICATION
- INTRODUCTION
- PROJECT LOCATION MAP
- IN DEPTH CONDITION DOCUMENTATION
- PLANS & SKETCHES
- IN DEPTH PHOTO DOCUMENTATION
- ASBESTOS SAMPLING SURVEY
- LATEST BIENNIAL INSPECTION REPORT

STRUCTURE IDENTIFICATION

a. Bridge Identification Number (BIN): 3/3 1093530
b. Reference Marker: 481I 3301 2062
c. Region: NYSDOT Region 3
d. County: Onondaga
e. Town: Dewitt
f. Feature Carried: I-481 Southbound
g. Feature Crossed: I-481 NB to I-690 WB Ramp
h. Orientation: Northeast

INTRODUCTION

a. Bridge History
   i. Year Built: 1972
   ii. Bridge Type: Single Span, Steel Multi-girder
   iii. Span Length: 124 feet
   iv. Out-to-Out Width: 61 feet
   v. Skew Angle: 3°
   vi. Structural Ratings and Rankings
      1. Federal Sufficiency: 82 (May 2013)
      2. Condition Rating: 5.047 (May 2013)
      3. General Recommendation: 5 (May 2013)
   vii. Live Load Posting (HS25): No
   viii. National Highway System (NHS): Yes
   ix. Previous work Done:
      1987 – Replace wearing surface (asphalt concrete overlay) with concrete overlay
      1992 – Clean and paint metal surfaces
      1998 – Replace joint (Begin)
      1998 – Clean and repair joint (End)
      1999 – Waterproofing bridge deck and corrosion inhibitor
      2003 – Repair seats and pedestals
      – Repair abutments and wingwalls
      – Clean and repair joints
      2008 – Repair structural bridge deck
      2012 – Clean and repair joints
   x. Planned Future Work: N/A

b. Highway Classification

i. Functional Classification: Urban Principle Arterial - Interstate

ii. Traffic Volumes

YEAR	AADT
2014	24744
2034	36769
2054	54637

PROJECT LOCATION MAP



IN-DEPTH CONDITION DOCUMENTATION

NYS DEPT. OF TRANSPORTATION **SHEET:** 1 OF 5
BRIDGE INSPECTION REPORT **BIN:** 1093530 **DATE:** 1/14,15,16/2014

FEATURE CARRIED: I-481 SB **TEAM LEADER:** G. STAM
FEATURE CROSSED: I-481 NB to I-690 WB RAMP **ASSIST. TEAM LEADER:** T. OLMSTEAD

ITEM	REMARKS	PHOTO NO.
	BEGIN ABUTMENT ITEMS	
TP 349-22	Begin Abutment - Joint with Deck: The begin bearings are fixed. The steel armor angle was removed and replaced with a concrete pavement transition header. At the top, there is no joint visible. The transition header is cracked along the begin edge near the left shoulder (Photo 1) and transverse cracked in the travel lanes (Photo 2). Under the deck, the pad at the top of the backwall has "walked" and is hanging down in bays 4, 5, & 6 (Photo 3). There is leakage down the backwall and the abutment stem beneath girder bays 6, 7, & 8 (Photos 3 & 4).	1,2,3,4
TP 349-24	Begin Abutment – Bearings: The begin bearings are fixed. All of the bearings have pack rust between the rocker and the masonry plate that restricts movement (Photo 5). The fascia bearing B9 is wet and in the worst condition (Photo 6). The anchor bolts at bearing B9 are dull sounding when struck and may be sheared off below the masonry plate.	5,6
TP 349-26	Begin Abutment - Seat and Pedestals: The seats and pedestals are in good condition with no hollow areas or significant cracks detected.	
TP 349-28	Begin Abutment – Backwall: There is tight mapcracking with dampness and efflorescence staining from leakage down the backwall (Photos 3, & 4). The worst is the upper half beneath girder bay 8 and the right side. At the upper right, there is a 4 square foot hollow sounding area with a small spall above (Photo 7). See the Begin Abutment Deterioration Sketch.	3,4,7
TP 349-30	Begin Abutment – Stem: The stem has been recently repaired, cleaned and a surface sealant applied. No hollow areas or significant cracks were detected. (Photo 8). The right side is wet from leakage down the backwall. The right side has an old repair that has an estimated 25 square foot area of map cracking (Photo 9). See the Begin Abutment Deterioration Sketch.	8,9
TP 349-32	Begin Abutment – Erosion: The paving block slope has scattered areas of deterioration with an estimated 40 square foot total area of settled and deteriorated blocks (Photo 8).	8
	END ABUTMENT ITEMS	
TP 349-23	End Abutment - Joint with Deck: The end bearings are expansion. The end joint with deck is steel armor compression seal type in poor condition with several repairs evident (Photo 10). In the left lane, the end side concrete header, the steel armor angle and the compression seal have been removed and replaced with armorless elastomeric header with a filled elastic material seal (Photo 11). The seal has pulled away from both sides and there are +/- ¼ inch gaps along the seal. The remaining steel armor angle is rusted throughout and bent at several locations from impact damage (Photo 12). The remaining compression seal is raised in the right lane and torn at scattered locations (Photo 10).	10,11,12

ITEM	REMARKS	PHOTO NO.
TP 349-25	End Abutment – Bearings: The end bearings are expansion. The fascia bearings B1 & B9 are rusted. (Photo 13). The interior bearings are in better condition (Photo 14). All of the bearings are extended at 40 ºF with the end of the slider plate at the back edge of the masonry plate (Photo 15) .	13,14,15
TP 349-27	End Abutment - Seats and Pedestals: The seat is in generally good condition. Pedestal P9 is damp and mapcracked throughout the left side. Also, on the left side, there are two cracks; one near the front, and the second at the rear (Photo 16). The remainder of the pedestals are in good condition with no hollow areas or significant cracks detected.	16
TP 349-29	End Abutment – Backwall: There are areas of tight hairline mapcracking covering 50% of the surface area of the backwall. The worst areas are at the right side in girder bays 7 & 8 and the right fascia bay. There is a full height vertical crack in bay 3 (Photo 17). There is a 4 square foot x 6 inches deep spall along the top edge behind girder G9 with leakage staining of the backwall (Photo 18). See the End Abutment Deterioration Sketch.	17,18
TP 349-31	End Abutment – Stem: The stem has been recently repaired, cleaned and a surface sealant applied. Toward the right side there is leakage stains and an old patch area is mapcracked with efflorescence (Photo 19). No hollow areas or significant cracks were detected. See the End Abutment Deterioration Sketch.	19
TP 349-33	End Abutment – Erosion: Erosion – The paving block slope protection at the left and right sides is deteriorated with settled and deteriorated blocks over a 30 square foot area (Photo 19).	19
	APPROACH ITEMS	
TP 349-53	Approach - Drainage: The begin right approach pavement at the curbline is ½ inch higher than the begin edge of the deck which traps runoff with shallow ponding on the deck along the begin right curbline (Photo 20).	20
TP 349-55	Approach - Settlement: The begin asphalt pavement has been recently repaved and there is no settlement at the begin approach (Photo 21). At the end approach, there is +/- 0.75 inch of settlement (Photo 22).	21,22
TP 349-57	Approach - Pavement: The begin asphalt pavement has been recently repaved. At the end approach, the asphalt pavement adjacent to the bridge is transverse cracked (Photo 10).	10

ITEM	REMARKS	PHOTO NO.
	DECK ITEMS	
TP 350-19	Deck - Wearing Surface: The ride quality of the deck is smooth (Photo 23). There is slight wear of the transverse traction grooving in the wheel paths.	23
TP 350-20	Deck - Curbs: The granite curbs are in good condition (Photo 24). The right curb has 8.25 inches average curb reveal. The average left curb reveal is 8.75 inches.	24
TP 350-21	Deck - Sidewalks and Fascias: Sidewalks – The left safety walk has light mapcracking on approximately 50% of the top surface (Photo 25). No hollow sounding areas were detected. The right safety walk has tight mapcracking on approximately 75% of the top surface. There are several larger width cracks and small spalls. At railing bay 8, there is a 12 inches long x 3 inches wide x 1.5 inches deep spall; and a 2 feet long x 4 inches wide spall that wraps around along the vertical face of the right fascia (Photo 26). The concrete surrounding the spalls is damp and crumbly. See the Top of Deck Deterioration Sketch.	25,26
	Fascias – The left fascia has tight mapcracking of the surface over 10% of the surface, primarily beneath the railing posts (Photo 27). Also, there are scattered vertical cracks (Photo 28). There is a minor crack and spall with a less than 1 square foot delamination under left side railing post 11. The right fascia is tight mapcracked throughout. The begin right fascia has two spalled areas up to 2 inches deep (Photo 29). The vertical face of the upper safety walk portion has several horizontal cracks with efflorescence leakage and staining (Photo 30). Beneath railing bay 8, the upper fascia is spalled 2 feet long x full height x up to 2 inches deep with exposed rusted reinforcement (Photo 31). The concrete at the spalls is damp and crumbly. Loose chunks of concrete were removed during this inspection.	27,28,29 30,31
TP 350-22	Deck - Railings: The railings are in good condition with only minor rust speckling of the galvanized surface (Photo 32). The right side railing rail connections are rusted (Photo 33). There is chain link snow fence attached to the left and right railings above the I481 NB to I690 WB ramp. On the left, the fence fabric and pipe connections are in good condition. On the right, the fence fabric is in good condition; however, the lower horizontal pipe connections to the vertical pipe posts are rusted. (Photo 34).	32,33,34
	SUPERSTRUCTURE ITEMS	
TP 350-27	Structural Deck: Record plans indicate the initial structural deck is 8 inches thick concrete mono-deck. SIP forms were not used. Records indicate the deck was repaired, the surface was scarified and it received a 1.75 inch concrete overlay in 1987.	
	Top of Deck - There are scattered random cracking and hollow areas (Photos 35 & 36); and several patches in good condition (Photo 37) as illustrated in the Top of Deck Deterioration Sketch. The total hollow area is 4% of the surface.	35,36,37

ITEM	REMARKS	PHOTO NO.
	Underdeck – The underside of the deck is hairline mapcracked throughout (Photo 38). There are scattered cracks, some with efflorescence, delaminations, hollow areas, and damp areas. There are several spalls, some with exposed rusted reinforcing bars; and a large area of protective shoring. The total damaged area, including the shored area is 2.8% of the surface. The deteriorated areas are illustrated on the Under Deck Deterioration Sketch; and significant areas noted below:	38
	• Bay 1 at begin – 4 square foot area of mapcracking, dampness with efflorescence (Photo 39).	39
	• Bay 3 diaphragm bay 3 – cracked and 2 square foot hollow area (Photo 40).	40
	• Bay 4 in diaphragm bay 2 – cracked with 2 square foot hollow area.	
	• Bay 5 scattered locations near diaphragm 6 – patched areas in good condition (Photo 41).	41
	• Bay 5 in diaphragm bay 2 - 6 square foot area of map cracking with dampness and efflorescence.	
	• Bay 6 diaphragm bay 2 – 75 square foot area of mapcracking; cracking; dampness, efflorescence and stalactites. Additionally, there is approximately 15 feet long x full bay width of shoring (Photo 42).	42
	• Bay 7 near mid-span – 6 square foot area of mapcracking and dampness.	
	• Bay 8 near begin – 15 square foot area spalled 2 inches deep with exposed rusted reinforcement. There are 6 transverse bars exposed – 1 bar rusted through and the remainder with 50% section loss. There are 5 longitudinal bars exposed and rusted but they are mostly bonded (Photo 43).	43
	• Bay 8 near mid-span – 4 square foot area of mapcracking and dampness.	
TP 350-28	Primary Members: The primary members are in good condition with only surface rusting where the paint has blistered or peeled (Photo 44). No significant section loss was noted.	44
TP 350-29	Secondary Members: The secondary members (diaphragms) are in good condition with only surface rusting where the paint has blistered or peeled. No significant section loss was noted.	
TP 350-30	Paint: The paint system is failed on approximately 10% of the surfaces of the girders and diaphragms. There is widespread cracking and peeling of the paint on the bottom flanges, most severely over the travel lanes (Photos 44, 45, & 46). There is surface rusting where the paint has peeled or blistered. The lower half of the webs have scattered blistering and peeling paint. The right fascia is the worst with 5% of the surface cracked, peeling or blistered (Photo 47 & 48). The remaining paint is faded and chalky.	44,45,46 47,48

ITEM	REMARKS	PHOTO NO.
	UTILITIES ITEMS	
TP 350-43	Lighting: None.	
TP 350-44	Sign Structure: There is an sign structure attached to the right fascia girder (Photo 48).	48
TP 350-45	Utilities and Support: None.	
	SPECIAL EMPHASIS ITEMS Special Emphasis Inspection Required · Non-Redundant/Fracture Critical Members – No · Pin and Hangers – No · Fatigue-Prone Welds – Yes · Non-Categorized Fatigue-Prone Details – No · Other – No Special Emphasis Details · Diaphragm gusset plate welded connections to bottom flanges of all girders.	

PLANS & SKETCHES

FED. ROAD REG. NO.	STATE	FEDERAL PROJECT NO.	SHEET NO.	SHEET NO.
1	NEW YORK	I-481-2(16)	145	80

INTERSTATE ROUTE CONNECTION 570
BUTTERNUT INTERCHANGE (PHASE 2)
ONONDAGA COUNTY

P.J.R. 1989
P.J.R. 10/91
11/22/95
09/17/97
07/24/07

ESTIMATE OF QUANTITIES

ITEM	DESCRIPTION	UNIT	QUANTITIES NEAT	QUANTITIES PROP'L
1WPS	Watering Plants and Sod	M Gal	17	4.0
2UF	Underdrain Filter	C Y	18	20
5B	Structure Excavation	C Y	3030	3030
114-G	Perf Corr Metal Pipe Underdr - 6'0"ø-18ga	L F	283	285
18	Class A - Concrete for Structures	C Y	20	20
18MA	Cl A-Conc. for Struct (Nono Br Slab)	S F	7776	7780
20	Class B-Concrete for Structures	C Y	1052	1055
24A	Bagged Screened Aggregate	C Y	165	165
28	Bar Reinforcement for Structure	Lb.	112801	112805
28B	Stud Shear Connectors	Ea	2250	2250
29	Structural Steel	Lb.	353830	353830
375(2)	Steel Bridge Railing (2 Rail)	L F	417	420
61	Bituminous Material	Gal.	247	250
79B	Concrete Block Paving	S Y	301	305
831X5	Temporary Sheet Piling	S F	8310	8310
945BV	Stone Curb (Bridge Types-Granite)	L F	580	580
12A	Sodding	S Y	81	85
363I	Epoxy Protective Coating for Conc	S F	2840	2840

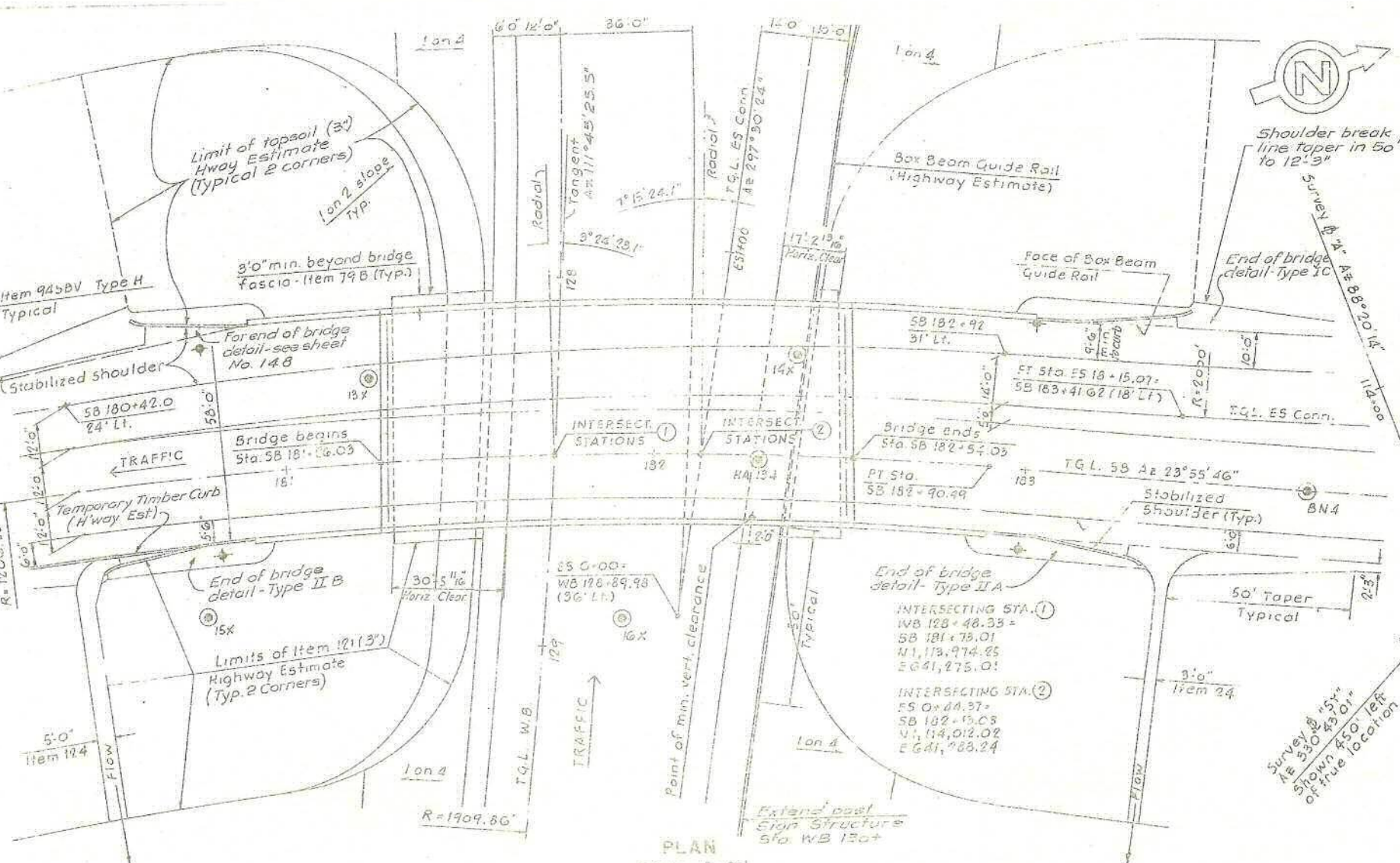

PLAN
Scale 1" = 20'

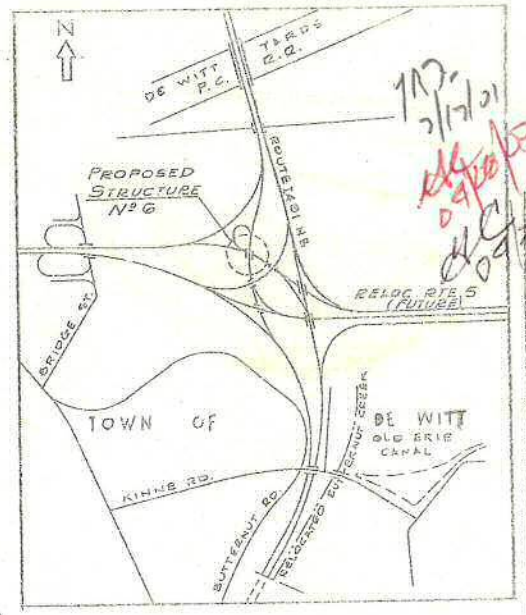

LOCATION PLAN
Scale 1" = 2,000

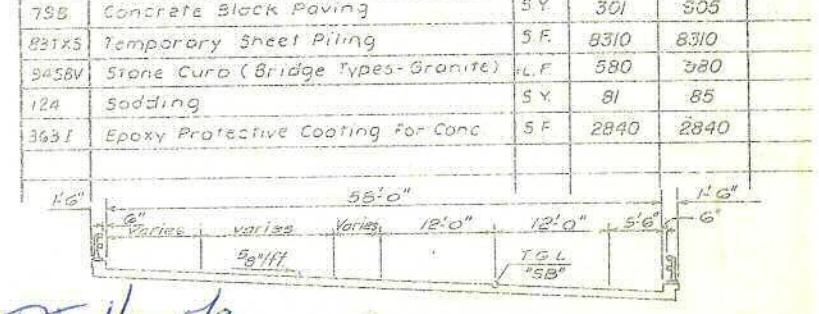

BRIDGE SECTION
Scale 1" = 10'

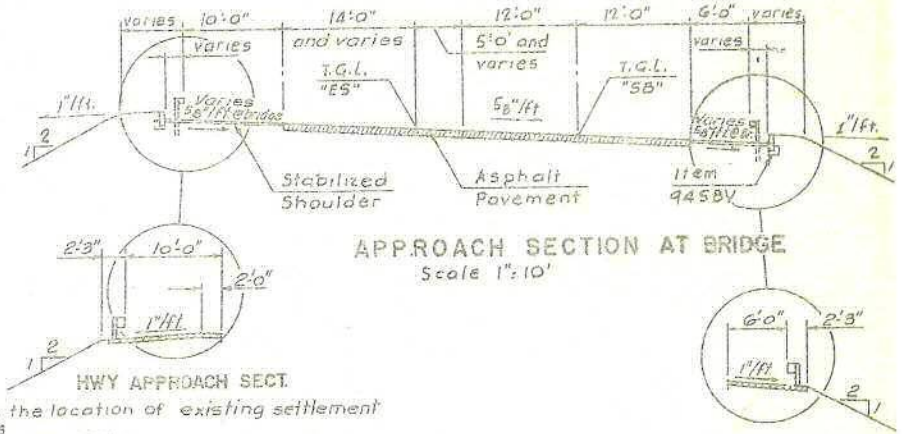

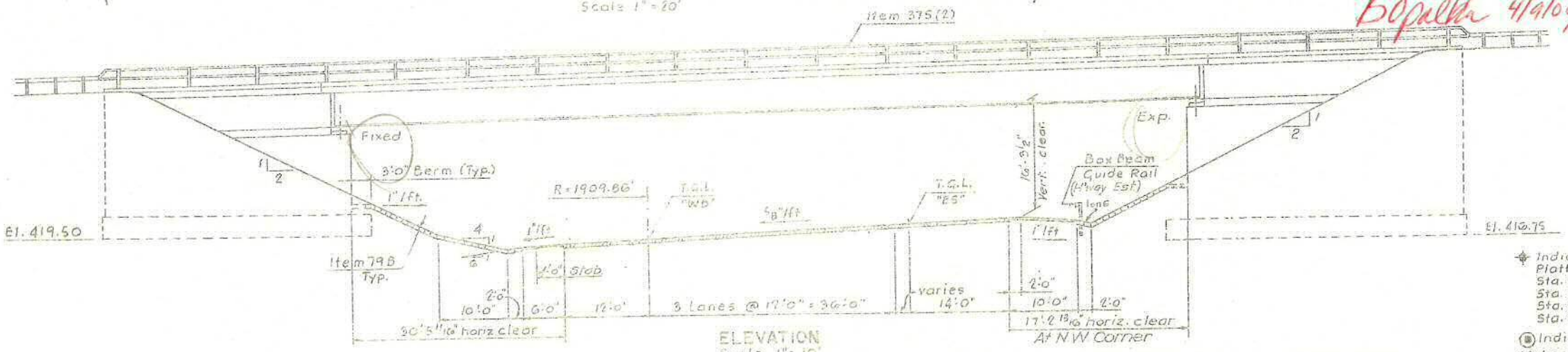

ELEVATION
Scale 1" = 10'

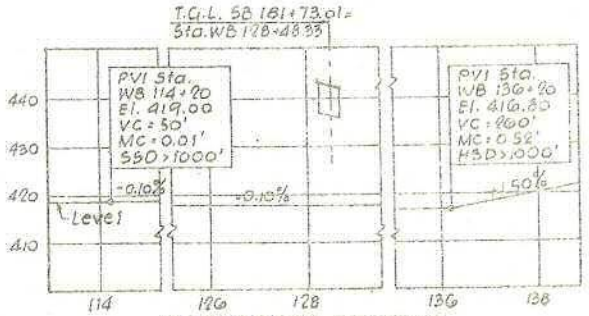

WESTBOUND PROFILE
Scale: Vert. 1" = 20' Horiz. 1" = 200'

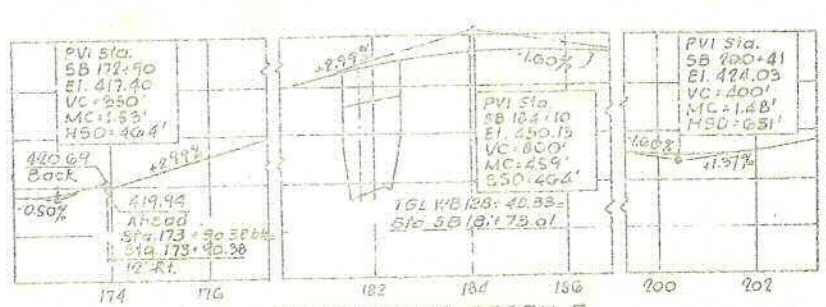

SOUTHBOUND PROFILE
Scale: Vert. 1" = 20' Horiz. 1" = 200'

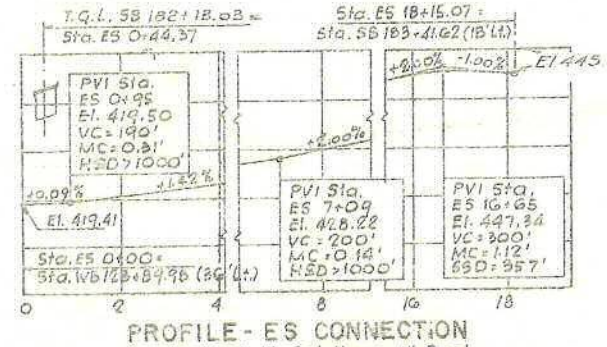

PROFILE - ES CONNECTION
Scale: Vert. 1" = 20' Horiz. 1" = 200'

Indicates the location of existing settlement Platforms
Sta. SB 180+80 - 22' Rt.
Sta. SB 180+80 - 95' Lt.
Sta. SB 183+00 - 22' Rt.
Sta. SB 183+00 - 40' Lt.

(B) Indicates location of borings.

Notes:
1. For General Notes see sheet No. 124
2. For design purpose the foundation pressure does not exceed 2½ tons/SF
3. Three (3) months waiting period required after completion of backfilling behind abutments and prior to setting final pedestal elevations.
4. Duration of required waiting period may be reduced by the Deputy Chief Engineer (Design) based upon analysis of settlement platform readings. Readings at one (1) week intervals taken at settlement platforms in the vicinity of the abutments will be required after the completion of the backfill operation.
5. For curve data see Alignment plan Sheet No. 40
6. The structural slab on this structure shall be formed with removable forms
7. For end of bridge details, see sheet no. 127

TEAM LEADER B Poelker — D.S. Hamm 5/9
PLANS FIELD VERIFIED 11/87
T.R. Fraser 4/12/07
B Poelker 4/9/07

1 09353 0

BUTTERNUT INTERCHANGE
F.A.I. 690 & F.A.I. 481
BRIDGE No. 6
ROUTE I 481 S.B. over ROUTE I 690 W.B.
GENERAL PLAN

ENGINEERING NO.	SCALE	DATE	SHEET NO.
7604.02	As shown	8/5/70	145

LOCKWOOD, KESSLER & BARTLETT, INC.
CONSULTING ENGINEERS — SYOSSET, NEW YORK

FED. RD. REG. NO.	STATE	PROJECT NO.	SHEET NO.	TOTAL SHEETS
1	NEW YORK	1-481-2(116)	146	809

INTERSTATE ROUTE CONNECTION 570
BUTTERNUT INTERCHANGE (PHASE 2)

ONONDAGA COUNTY

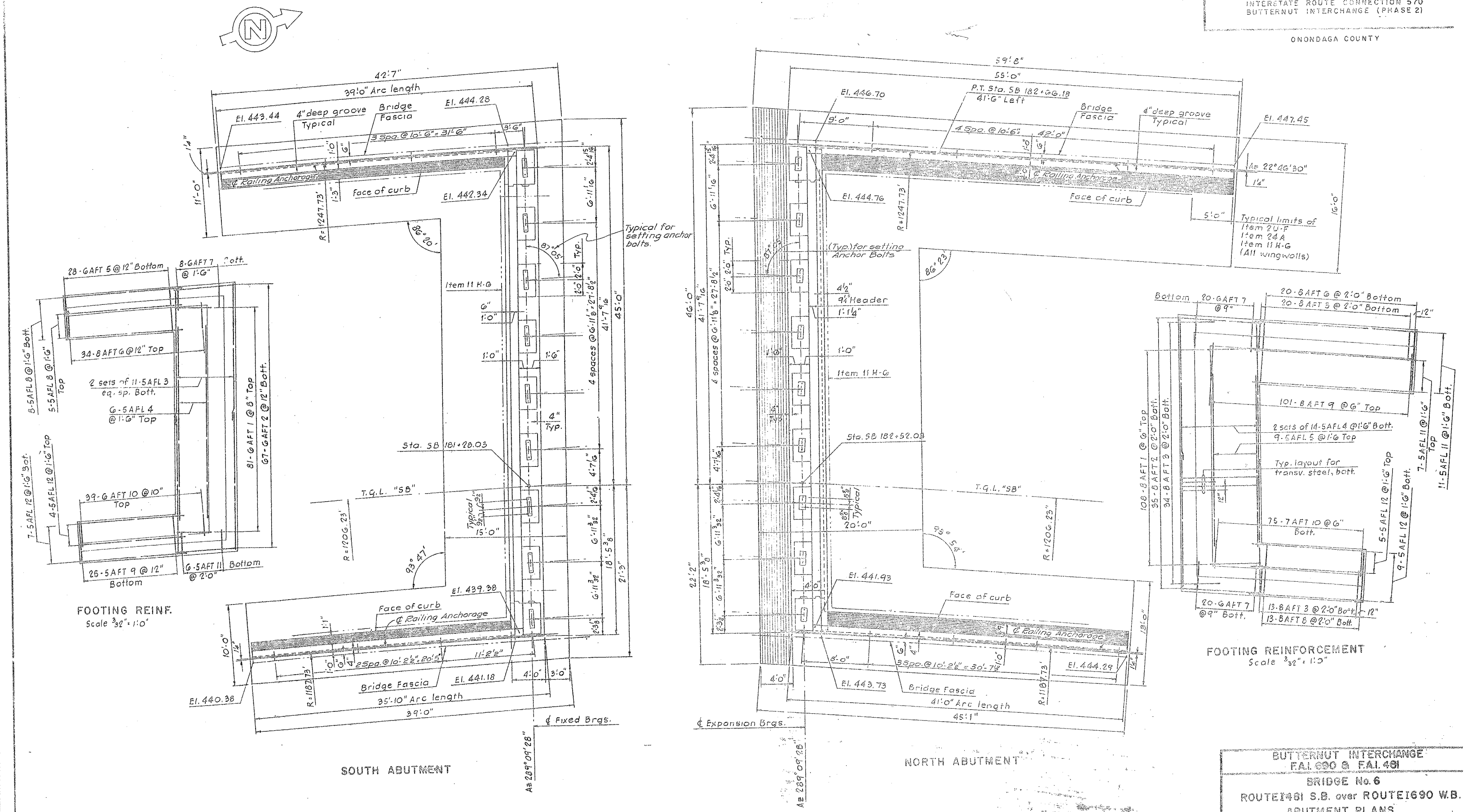

ABUTMENT GEOMETRY
Scale 3/16" = 1'-0"

BUTTERNUT INTERCHANGE
F.A.I. 690 & F.A.I. 481
BRIDGE No. 6
ROUTE I481 S.B. over ROUTE I690 W.B.
ABUTMENT PLANS

DRAWING NO.	SCALE	DATE	SHEET NO.
7504-02	As shown	8/15/70	146

LOCKWOOD, KESSLER & BARTLETT, INC.
CONSULTING ENGINEERS - SYOSSET, NEW YORK

FED. RD. REG. NO.	STATE	FEDERAL AID PROJECT NO.	SHEET NO.	TOT SHE
1	NEW YORK	I-690-3(28) I-481-2(16)	147	3

INTERSTATE ROUTE CONNECTION 570
BUTTERNUT INTERCHANGE (PHASE 2)

ONONDAGA COUNTY

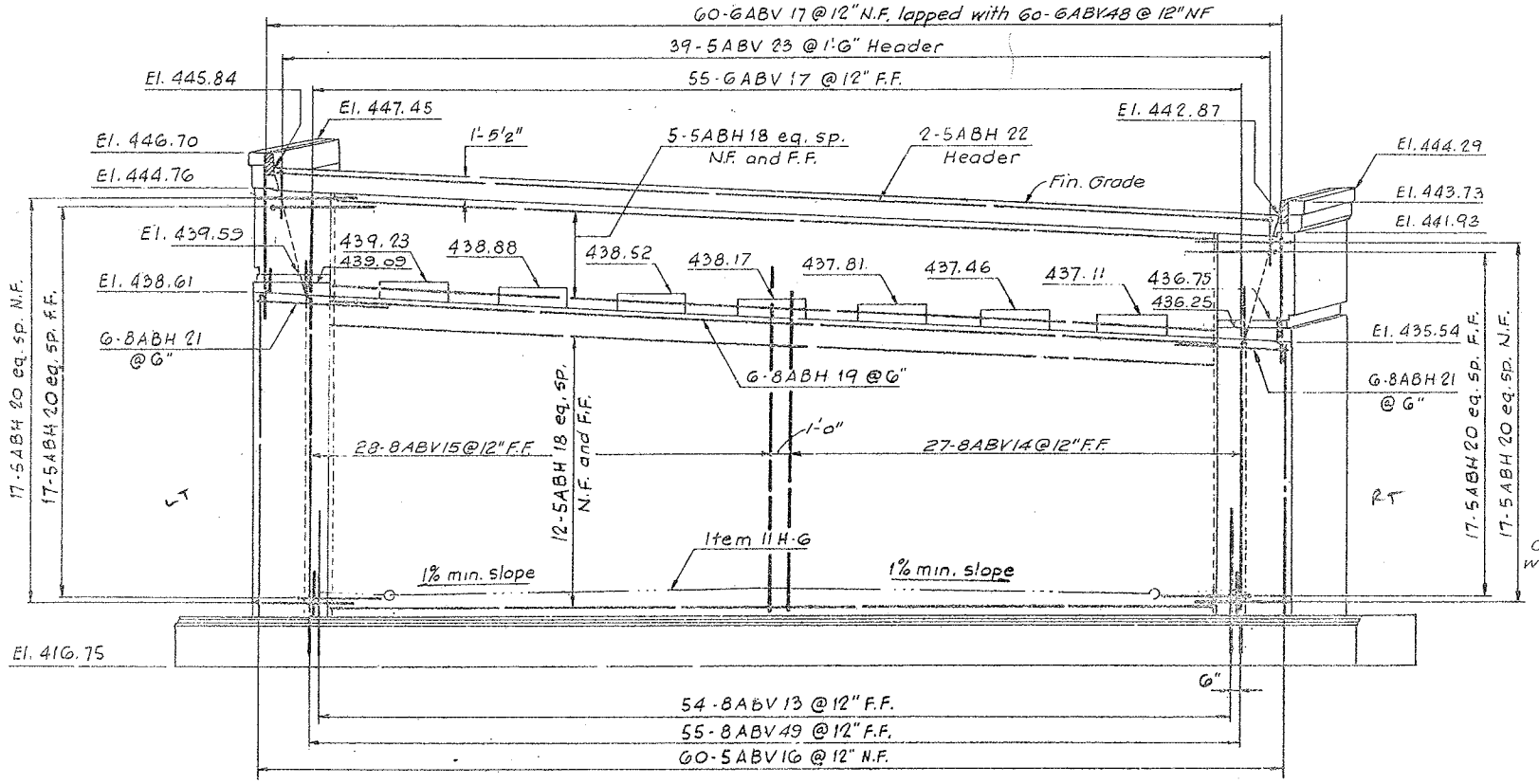

ELEVATION - NORTH ABUTMENT END
Scale 3/16" = 1'-0"

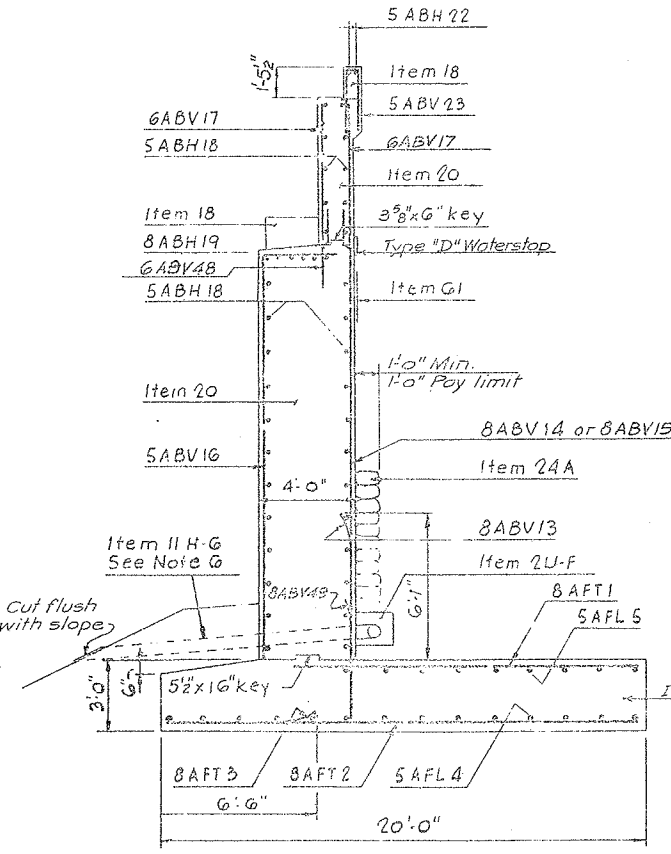

TYPICAL SECTION
Scale 1/4" = 1'-0"

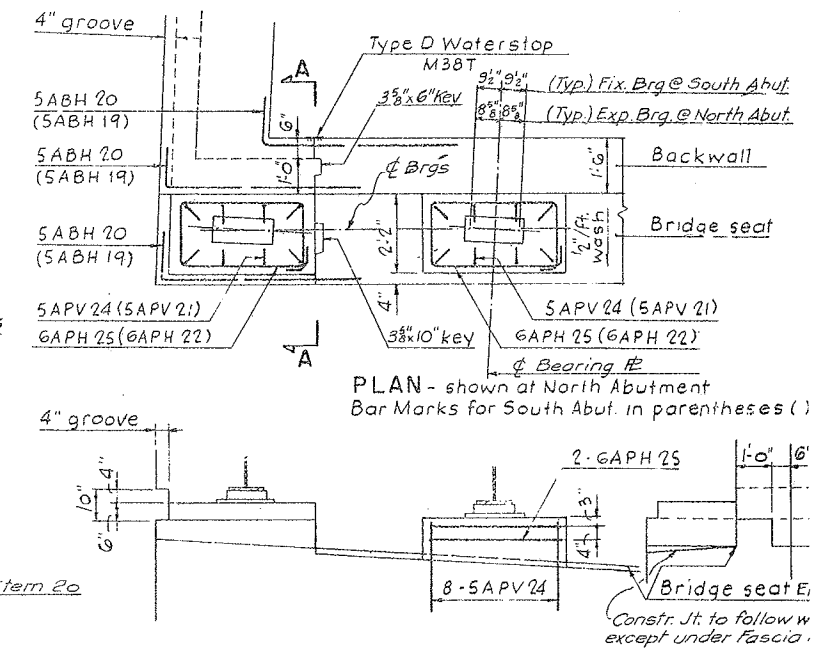

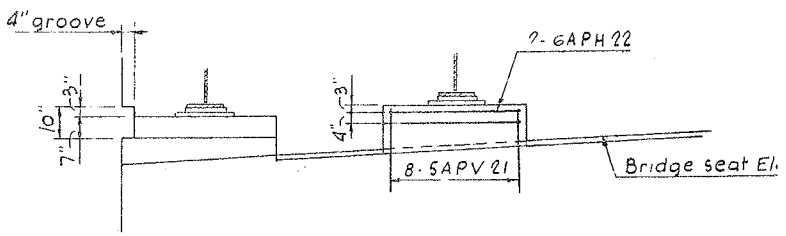

ELEVATION AT FIXED BRGS.

PEDESTAL DETAILS

Scale 3/8" = 1'-0"

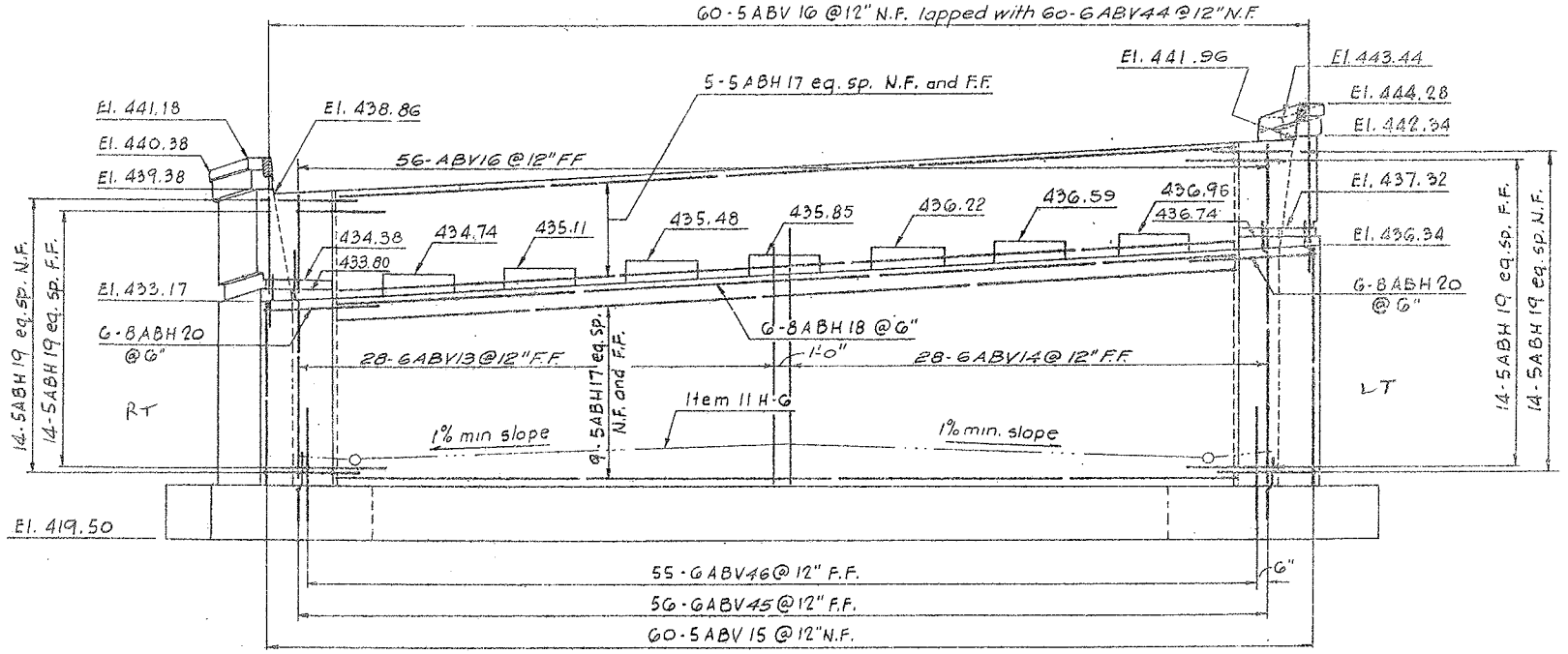

ELEVATION - SOUTH ABUTMENT BEG.
Scale 3/16" = 1'-0"

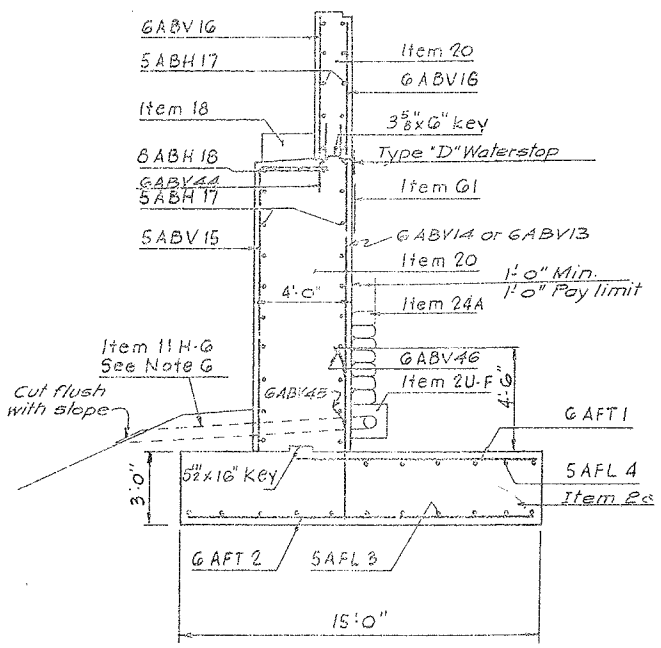

TYPICAL SECTION
Scale 1/4" = 1'-0"

NOTES

1. Anchor bolts for Bearings shall be 1 1/4" ϕ roughened or swedged bolts set 12" into concrete. Bolts for fixed bearings: 1'-4" long. Bolts for expansion bearings: 1'-4 1/2" long.
2. For Backfill and Excavation details see Sheet No. 128
3. For details of Bearings see Sheet No. 130
4. For Backwall and Waterstop details see Sheet No. 125
5. For Rail Post spacing see Sheet No. 150
6. Non-perforated pipe shall be used through abutment and berm.

BUTTERNUT INTERCHANGE
F.A.I. 690 & F.A.I. 481

BRIDGE No. 6

ROUTE I481 S.B. over ROUTE I690 W.B

ABUTMENTS - ELEVATIONS & SECTIONS

DRAWING NO.	SCALE	DATE	SHEET NO.
7504-02	As shown	8/15/70	147

LOCKWOOD, KESSLER & BARTLETT, INC.
CONSULTING ENGINEERS - SYOSSET, NEW YORK

F.I.S.H. 70-1

FED. RD. REG. NO.	STATE	FEDERAL AID PROJECT NO.	SHEET NO.	T
1	NEW YORK	I-690-3(38) I-481-2(116)	148	

INTERSTATE ROUTE CONNECTION 570
BUTTERNUT INTERCHANGE (PHASE 2)

ONONDAGA COUNTY

Note: See "Typical Wall Section" and "Detail A" Sheet No 149

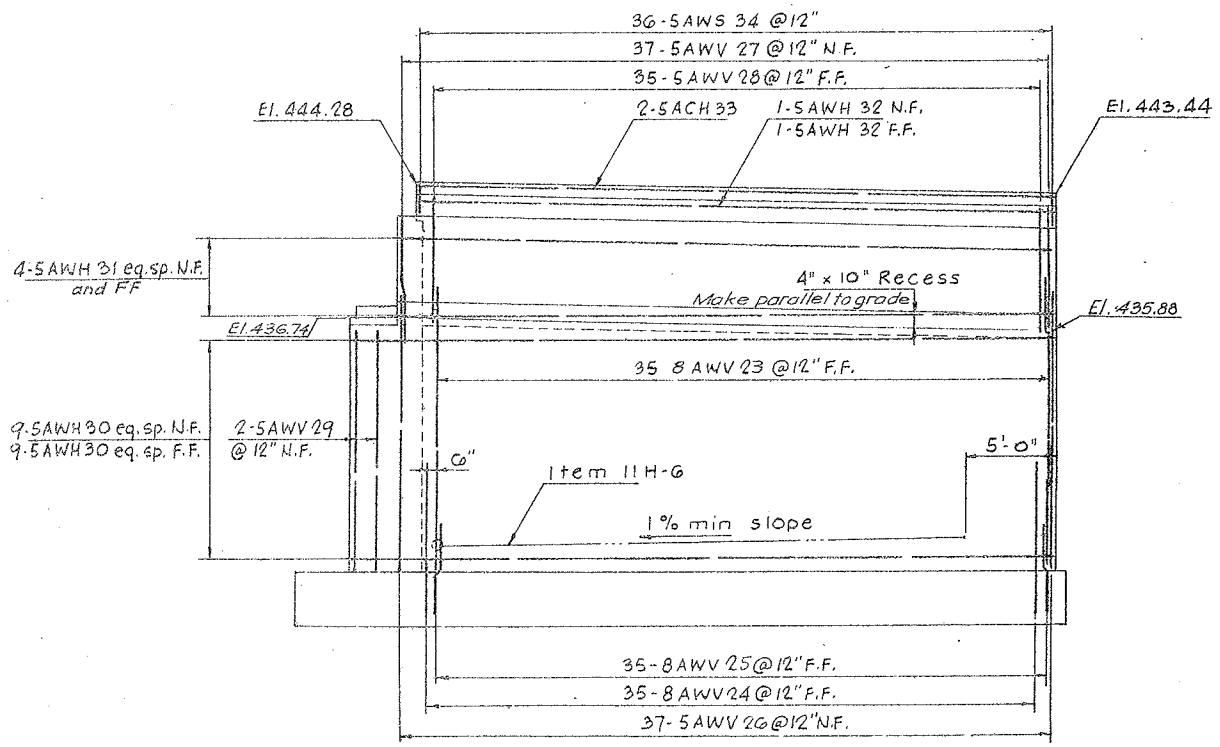

WEST ELEVATION
Scale 3/16"=1'-0"

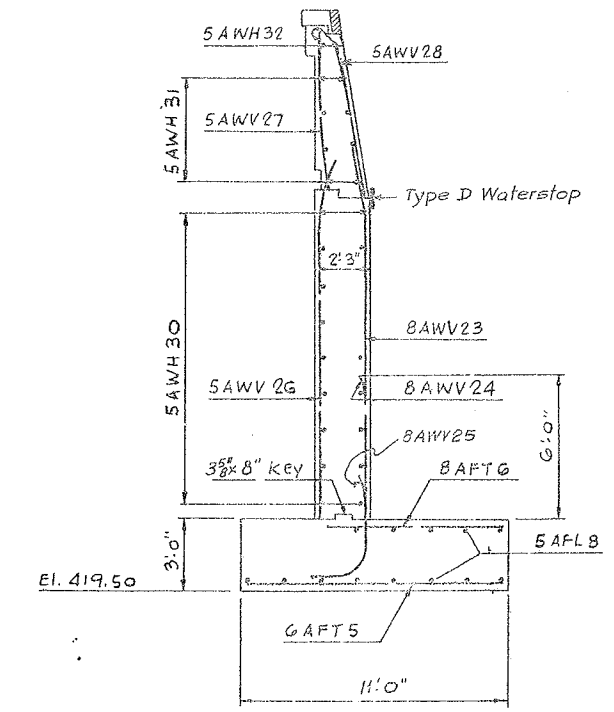

WEST WALL SECTION
Scale 1/4"=1'-0"

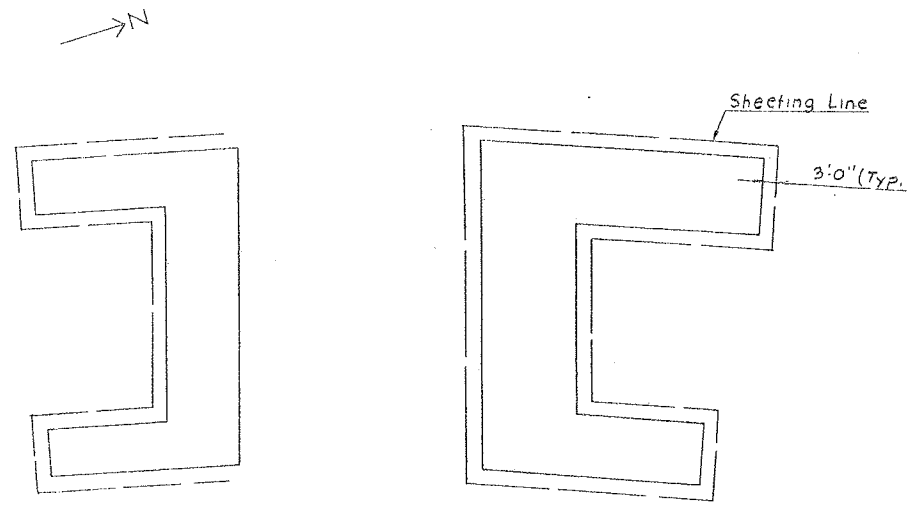

PLAN - ITEM 83TXS
Scale 1"=20'

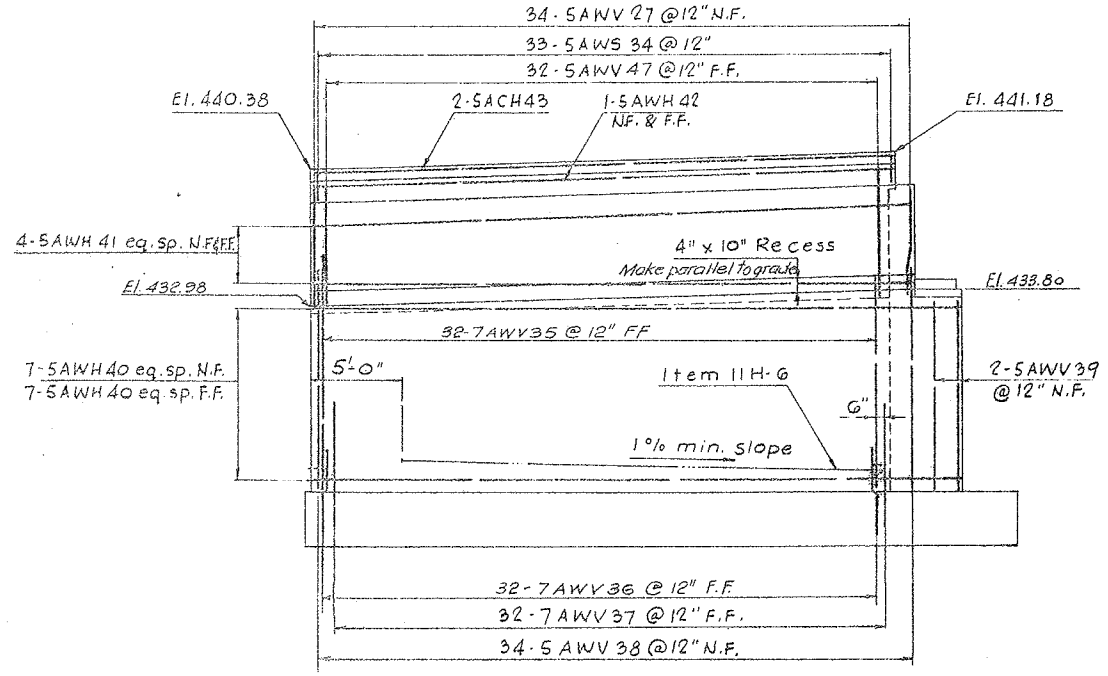

EAST ELEVATION
Scale 3/16"=1'-0"

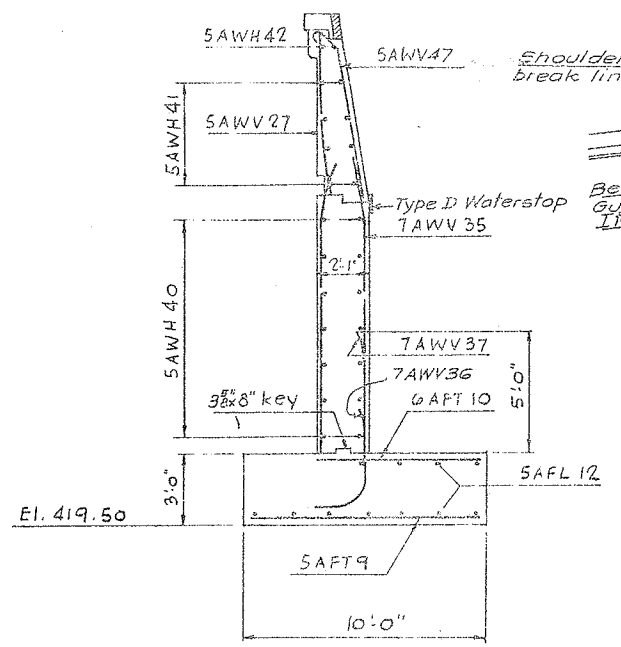

EAST WALL SECTION
Scale 1/4"=1'-0"

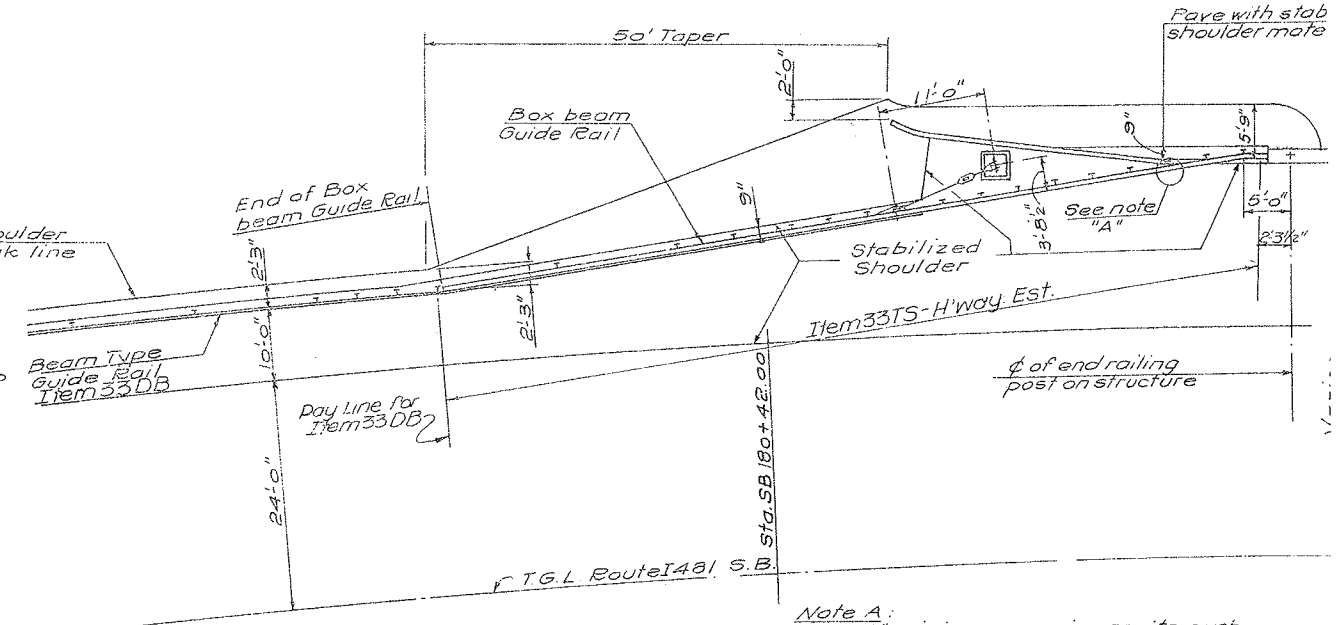

Note A:
6" minimum gap in granite curb to be filled with mortar after guide rail post has been set. This filled in portion shall be paid for at the unit price set for the adjacent granite curb.

For details of granite curb beam type guide railing connected to box beam railing and railing anchorage see sheet No. 127

END OF BRIDGE DETAIL
(SOUTHWEST CORNER)
No Scale

BUTTERNUT INTERCHANGE
F.A.I. 690 & F.A.I. 481
BRIDGE No. 6
ROUTE I481 S.B. over ROUTE I690 W.
WINGWALLS at SOUTH ABUTMENT

DRAWING NO.	SCALE	DATE	SHEET N
7504-02	As shown	8/5/70	148

LOCKWOOD, KESSLER & BARTLETT, INC.
CONSULTING ENGINEERS – SYOSSET, NEW YORK

FED. RD. REG. NO.	STATE	FEDERAL PROJECT AID NO.	SHEET NO.
1	NEW YORK	I-690-3(28) I-481-2(119)	149

INTERSTATE ROUTE CONNECTION 570
BUTTERNUT INTERCHANGE (PHASE 2)

ONONDAGA COUNTY

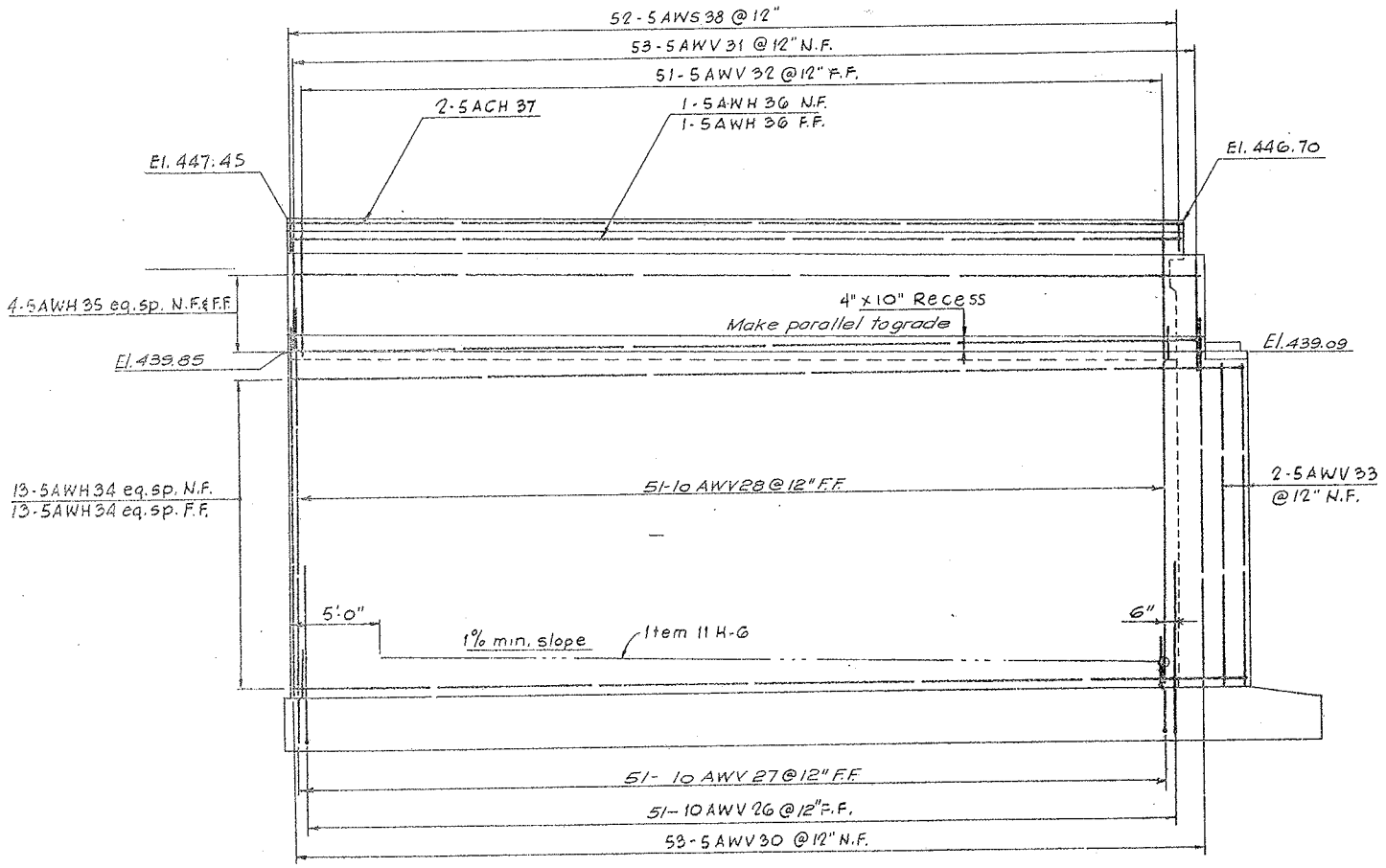

WEST ELEVATION
Scale 3/16"=1'-0"

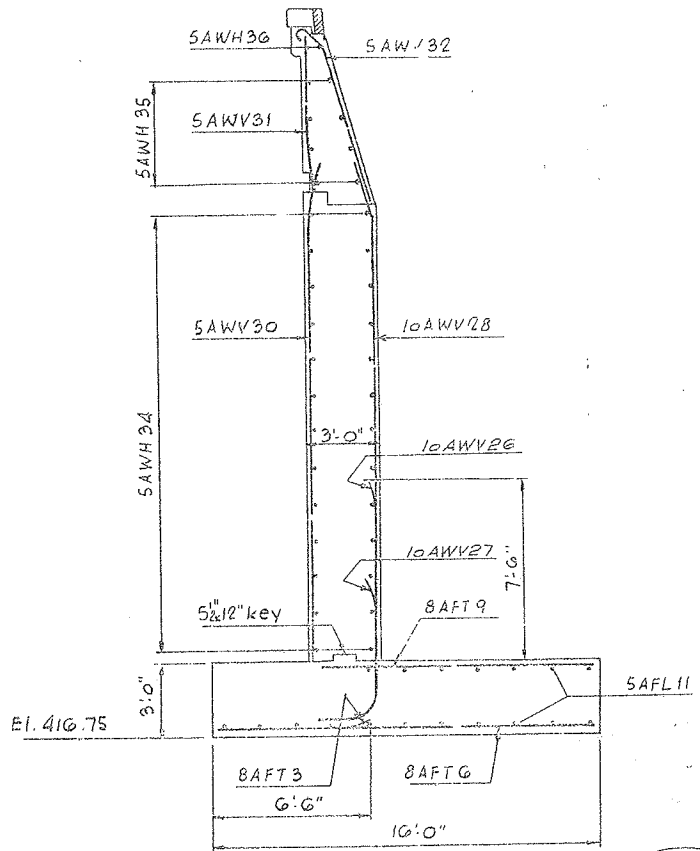

WEST WALL SECTION
Scale 1/4"=1'-0"

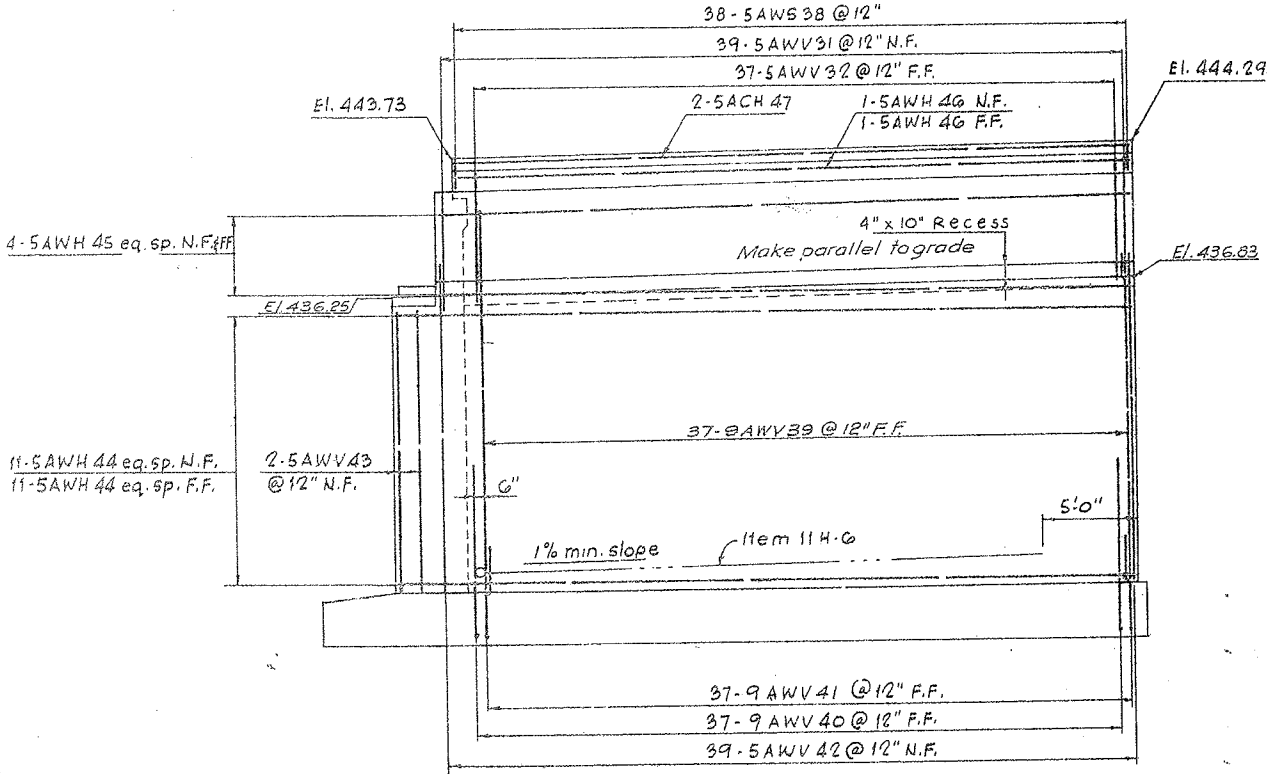

EAST ELEVATION
Scale 3/16"=1'-0"

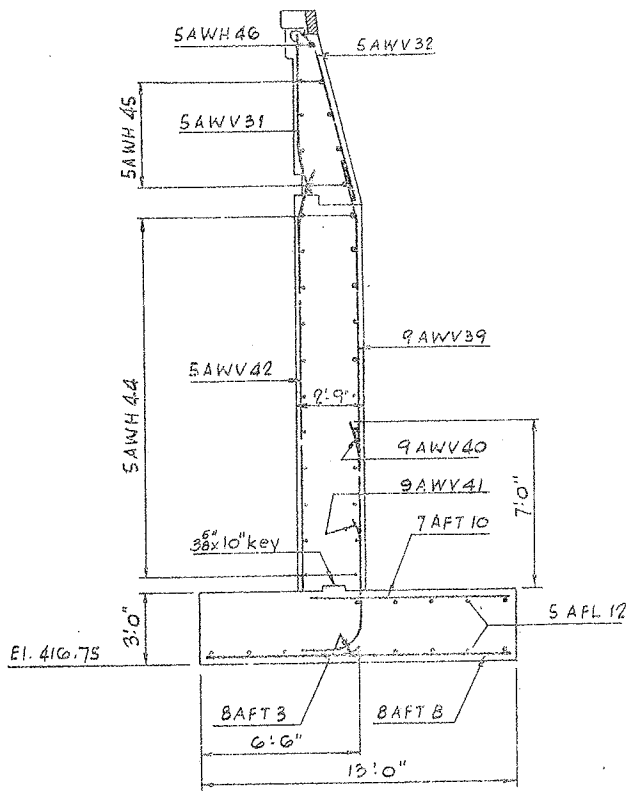

EAST WALL SECTION
Scale 1/4"=1'-0"

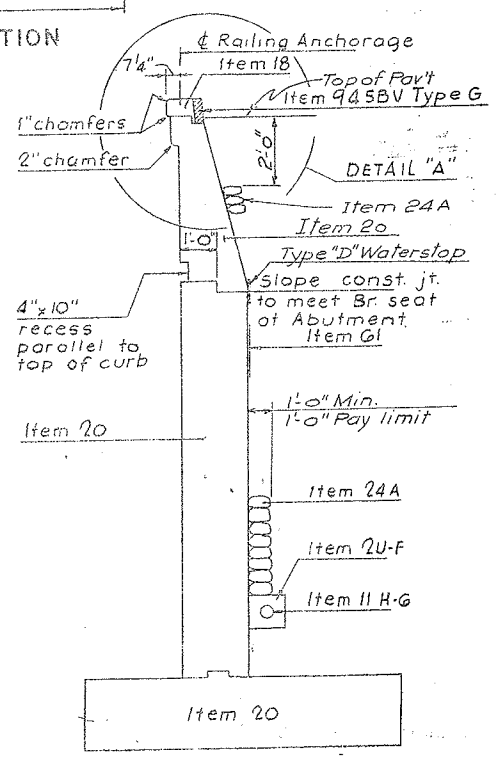

TYPICAL SECTION
THRU WINGWALL
NORTH & SOUTH
ABUTMENTS
No scale

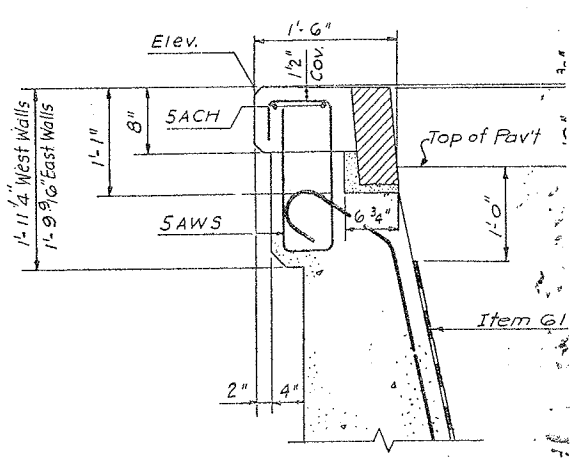

DETAIL "A"
No scale

BUTTERNUT INTERCHANGE
F.A.I. 690 & F.A.I. 481

BRIDGE No. 6

ROUTE I481 S.B. over ROUTE I690
WINGWALLS at NORTH ABUTMENT

DRAWING NO.	SCALE	DATE	
7504-02	As shown	8/15/70	

LOCKWOOD, KESSLER & BARTLETT, INC.
CONSULTING ENGINEERS – SYOSSET, NEW YORK

Traced by G. Cronin
Checked by

FED. RD. REG. NO.	STATE	FEDERAL AID PROJECT NO.	SHEET NO.	TOTAL SHEETS
1	NEW YORK	F-090-3(28) I-481-2(116)	150	204

INTERSTATE ROUTE CONNECTION 570
BUTTERNUT INTERCHANGE (PHASE 2)

ONONDAGA COUNTY

11/29/67

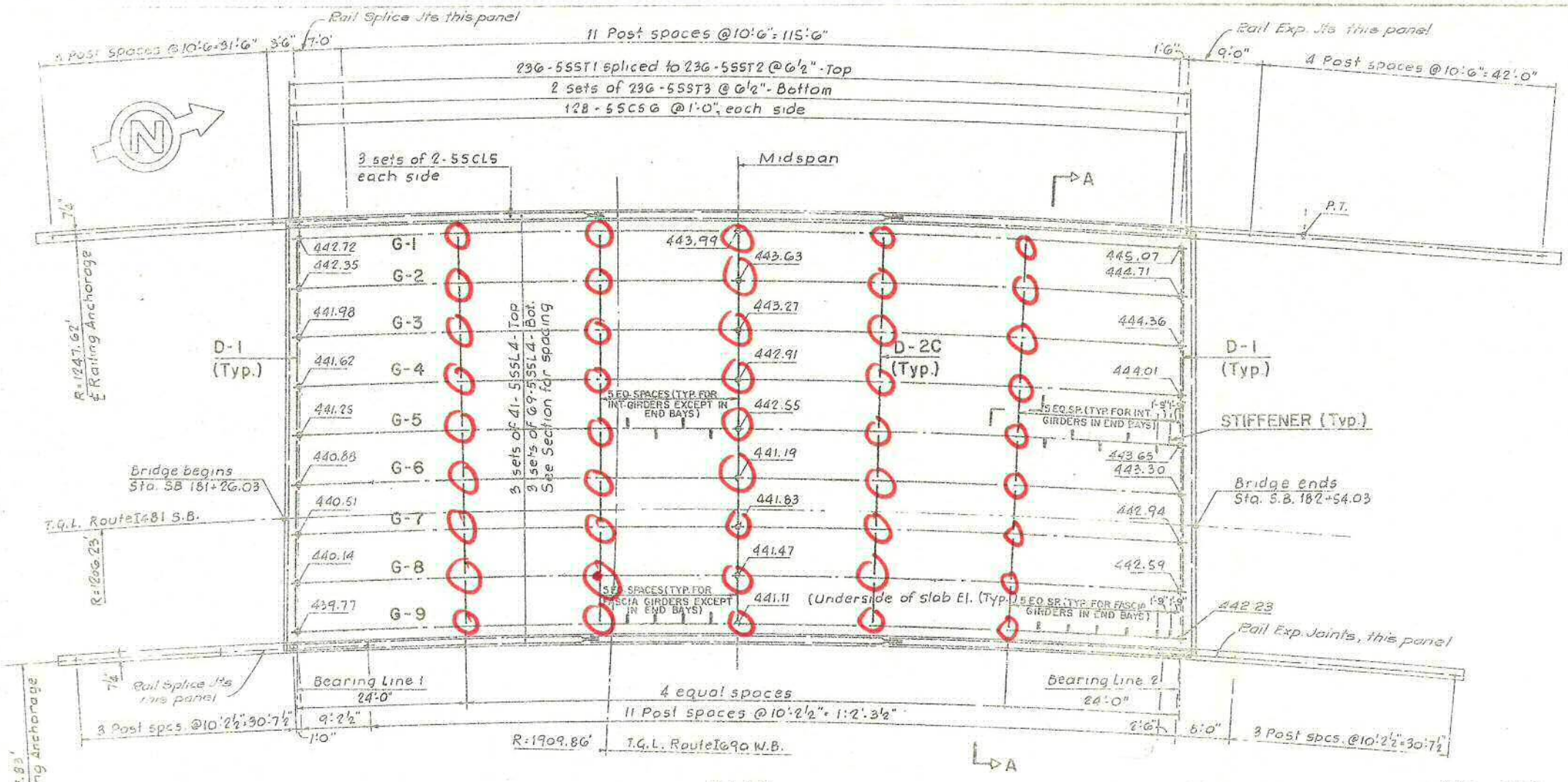

PLAN
Scale 1" = 10'

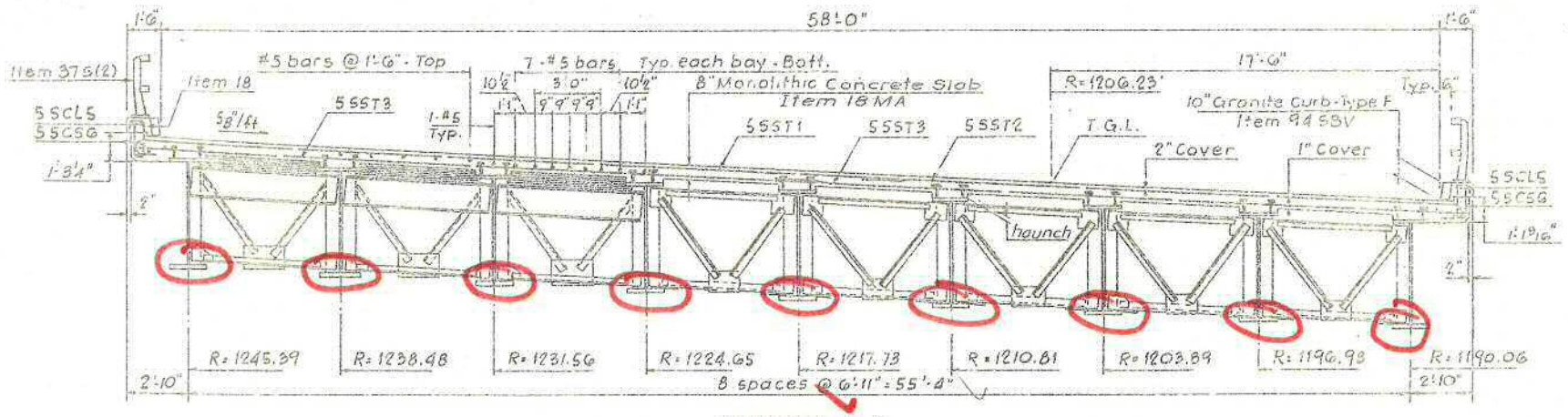

SECTION A-A
Scale ¼"=1'-0"

Note: For diaphragm details for curved girders see sheet No. 129.

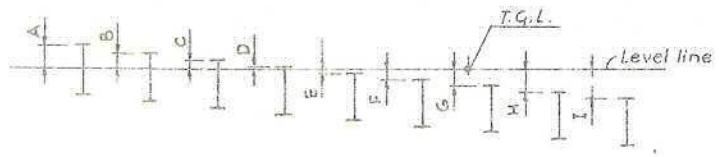

THEORETICAL VERTICAL MEASUREMENTS AT ℄ BRG.

BRG. LINE	VERTICAL MEASUREMENTS TO TOP OF STEEL							
	A	B	C	D	E	F	G	H	I
1	1'-1 7/8"	9 7/16"	5 1/16"	5/8"	3 13/16"	8 1/4"	1'-0 5/8"	1'-5 1/16"	1'-9 1/2"
2	1'-0 15/16"	8 11/16"	4 7/16"	3/16"	4 1/16"	8 5/16"	1'-0 9/16"	1'-4 13/16"	1'-9 1/16"

ADJUSTMENT FOR CAMBER		
	FASCIA GIRDER	INTERIOR GIRDER
SLAB CONCRETE	2'8"	2'6"
V.C.	1 3/8"	1 3/8"
SUPERIMPOSED DEAD LOAD	7/16"	3/8"
D.L. STEEL ERECTED	7/8"	7/8"
TOTAL	4 13/16"	4 7/8"

GIRDERS	LENGTH ℄ BRG. TO ℄ BRG. (ARC)
G-1	123'-11 15/16"
G-2	123'-11 15/16"
G-3	123'-11 15/16"
G-4	123'-11 15/16"
G-5	124'-0"
G-6	124'-0"
G-7	124'-0"
G-8	124'-0"
G-9	124'-0"

Diaphragm Conn Plates to be 7"x 7/16" ℄'s (Typ.)

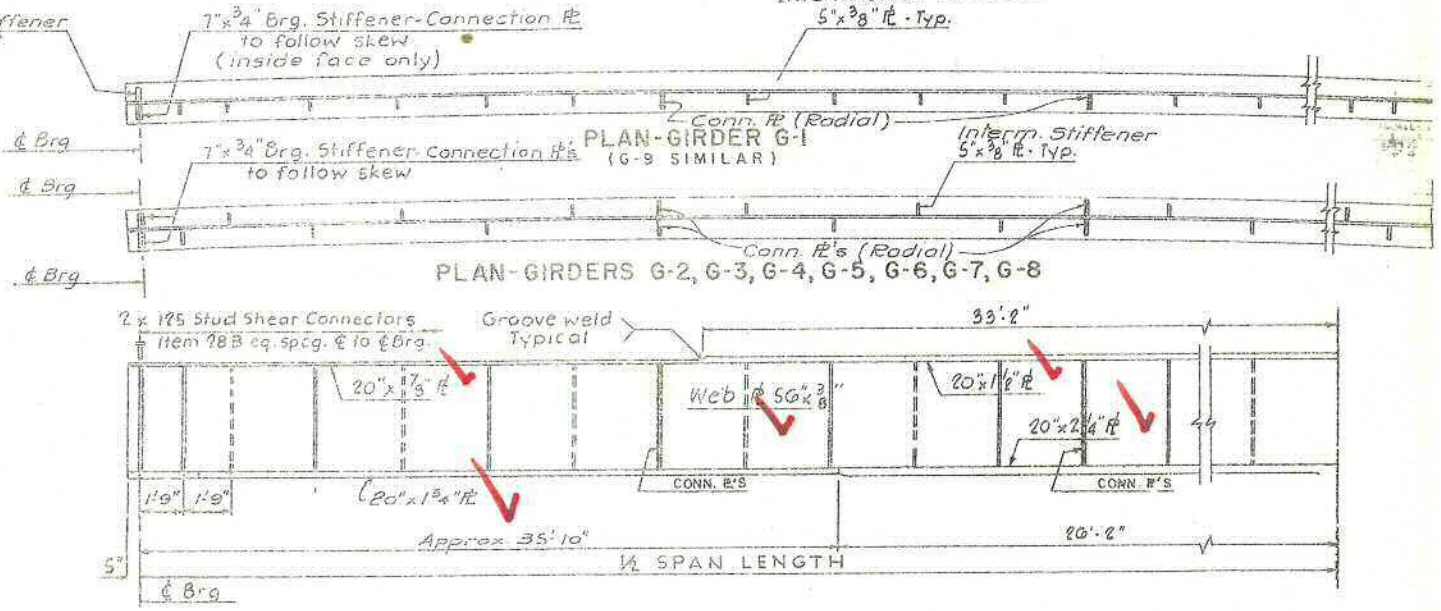

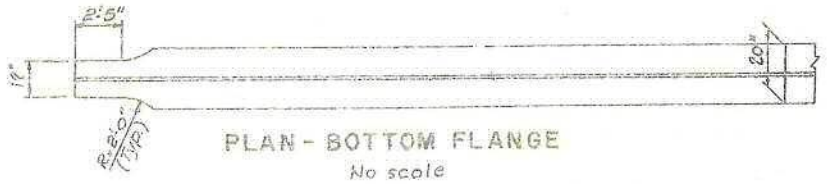

PLAN - BOTTOM FLANGE
No scale

BUTTERNUT INTERCHANGE
F.A.I. 690 & F.A.I. 481
BRIDGE No. 6
ROUTE I-481 S.B. over ROUTE I-690 W.B.
SUPERSTRUCTURE

DRAWING NO.	SCALE	DATE	SHEET NO.
7504-02	As shown	8/5/70	150

LOCKWOOD, KESSLER & BARTLETT, INC.
CONSULTING ENGINEERS - SYOSSET, NEW YORK

BIN: 1093530
I481 SB /
I481 NB to I690 WB Ramp

BEGIN ABUTMENT DETERIORATION SKETCH

NOT TO SCALE

DATE: 01/15/2014

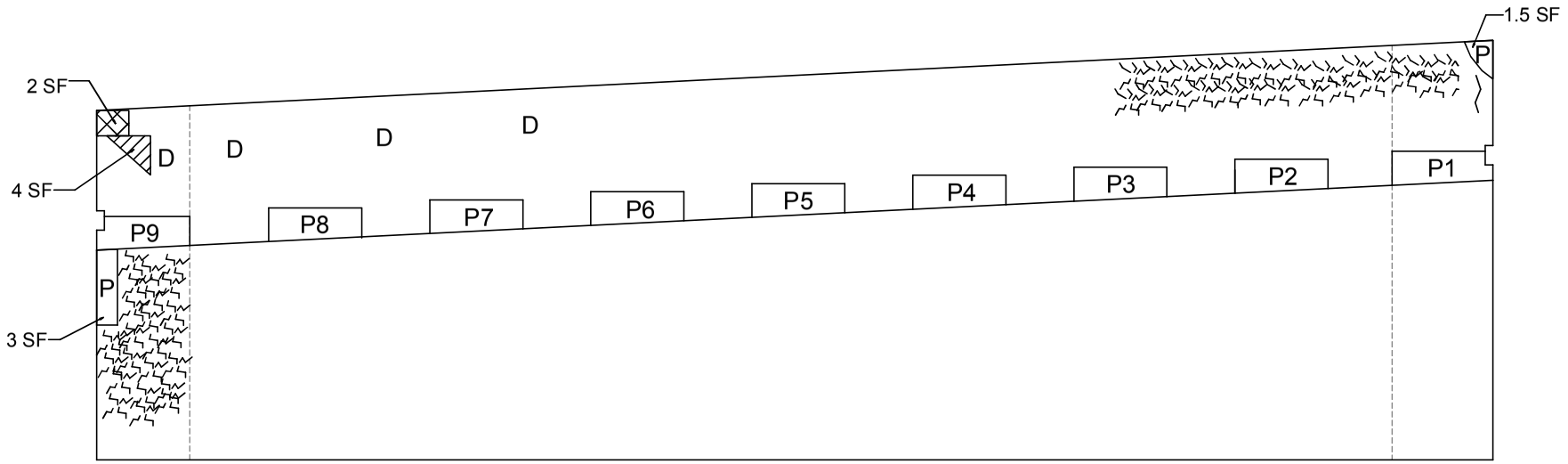

ELEVATION

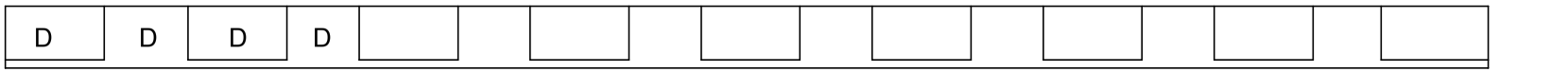

PLAN

N

LEGEND			
Mapcracking		P	Patch
E	Efflorescence	D	Damp
Hollow Concrete		Spall	

BIN: 1093530
I481 SB /
I481 NB to I690 WB Ramp

END ABUTMENT DETERIORATION SKETCH

NOT TO SCALE

DATE: 01/15/2014

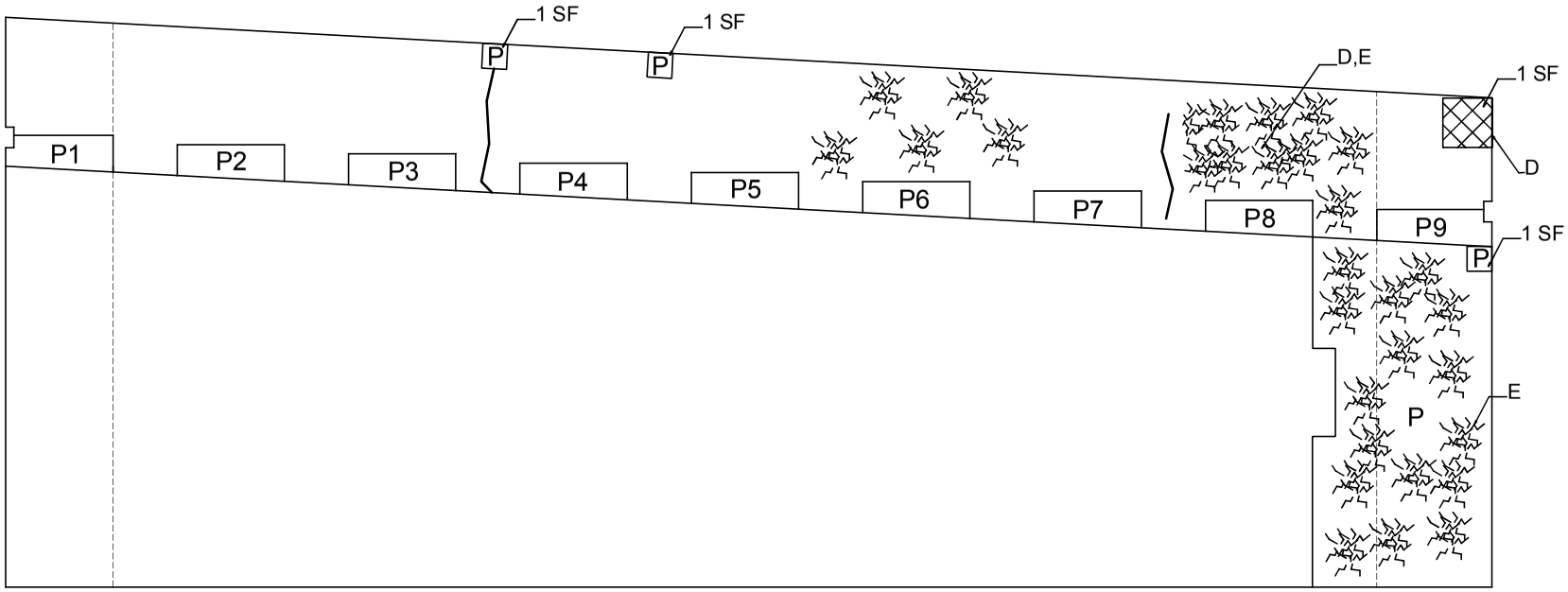

ELEVATION

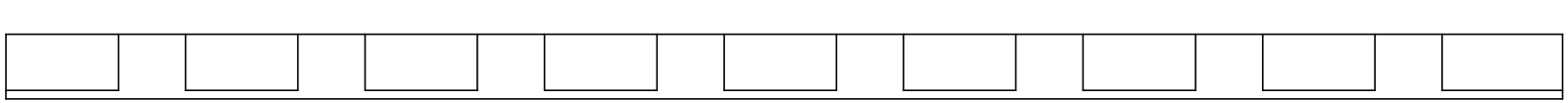

PLAN

N

LEGEND

Mapcracking		P	Patch
E	Efflorescence	D	Damp
Crack			Spall

BIN: 1093530
I481 SB / I481 NB to I690 WB Ramp

TOP OF DECK DETERIORATION SKETCH

NOT TO SCALE

DATE: 01/14/2014, 01/16/2014

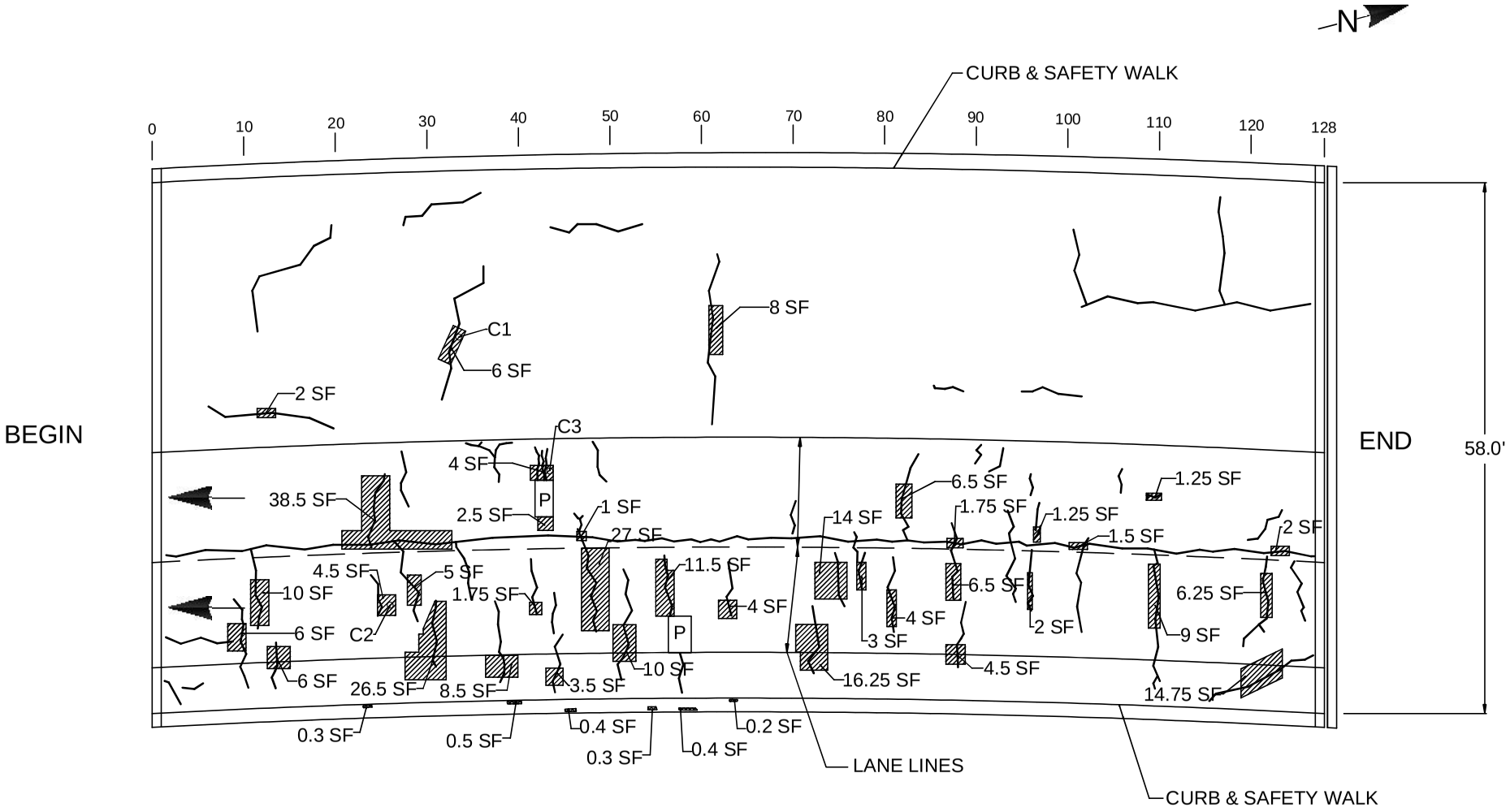

TOTAL DAMAGED AREA EQUALS 298.85 SF WHICH IS 4.0% OF DECK SURFACE

LEGEND

- P — Patch
- Crack
- Coring Location
- Hollow Concrete

BIN: 1093530
I481 SB /
I481 NB to I690 WB Ramp

UNDERSIDE OF DECK DETERIORATION SKETCH

NOT TO SCALE

DATE: 01/15/2014

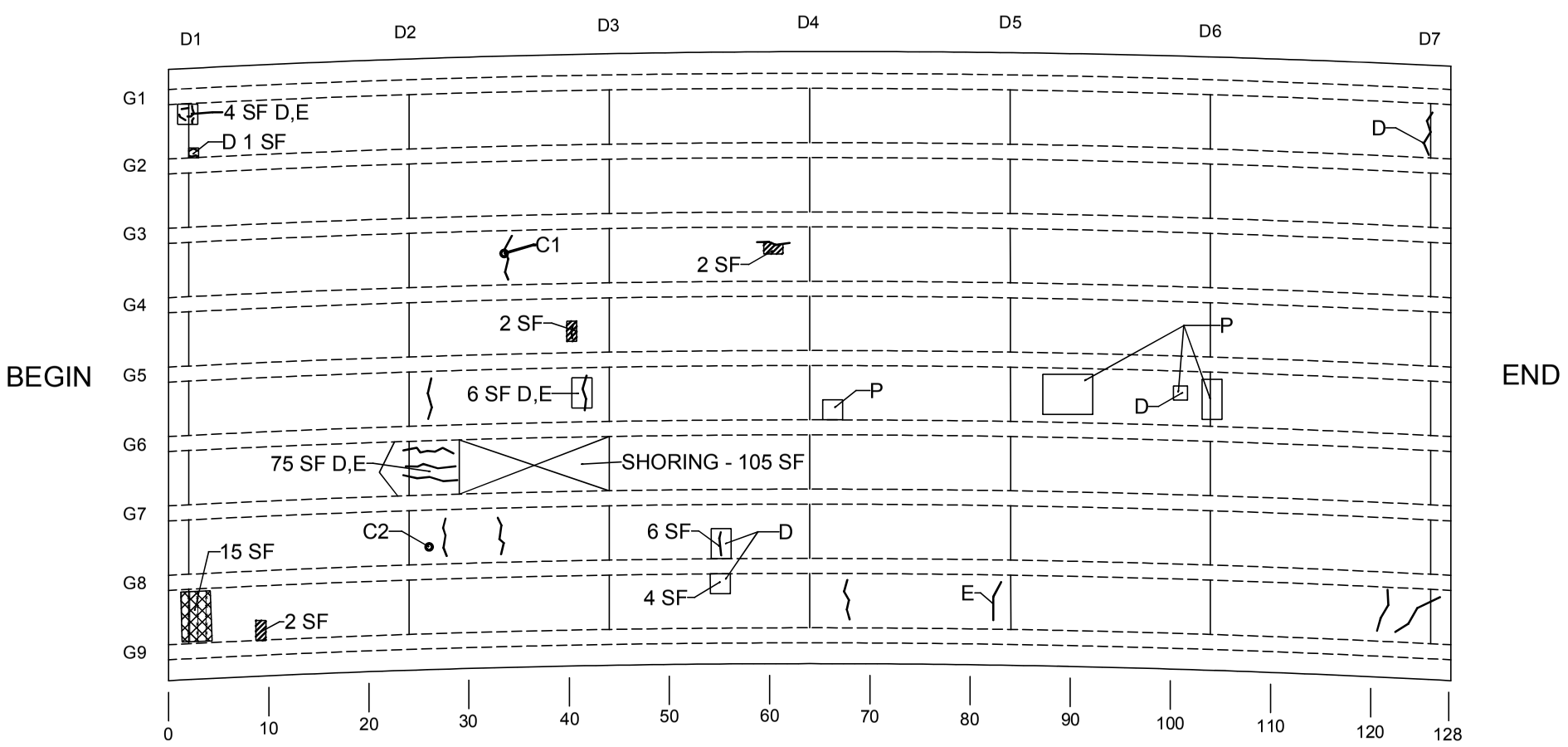

TOTAL DAMAGED AREA EQUALS 222 SF WHICH IS 2.8% OF DECK SURFACE

NOTE: DAMAGED AREA INCLUDES AREA OF SHORING

LEGEND

- Spalling with Exposed Reinforcement
- Hollow Concrete
- E — Efflorescence
- Core Location
- D — Damp
- P — Patch
- Crack

IN-DEPTH PHOTO DOCUMENTATION

BIN: 1093530
I481 SB / I481 NB to I690 WB Ramp

IN DEPTH INSPECTION
PHOTO LOCATION SKETCH

DATE: 01/14/2014, 01/16/2014

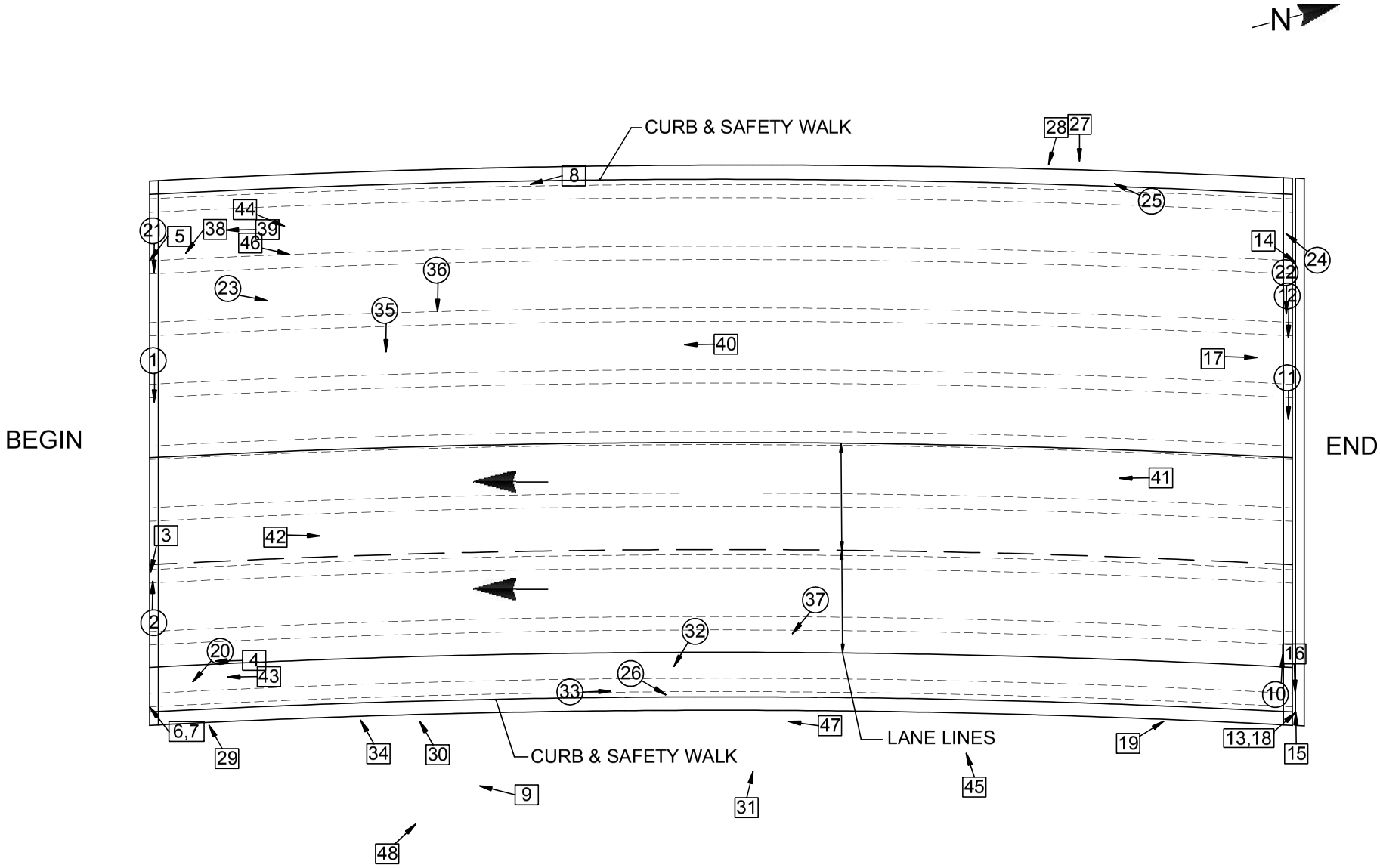



DESCRIPTION: BEGIN APPROACH PAVEMENT TRANSITION HEADER AT LEFT SHOULDER – LOOKING FROM LEFT TO RIGHT

PHOTO 1



DESCRIPTION: BEGIN APPROACH PAVEMNT TRANSITION HEADER AT RIGHT LANE – LOOKING FROM RIGHT TO LEFT

PHOTO 2



DESCRIPTION: BEGIN ABUTMENT BACKWALL AT BAY 6 AND BAY 7

PHOTO 3



DESCRIPTION: BEGIN ABUTMENT BACKWALL AT BAY 8

PHOTO 4



DESCRIPTION: BEGIN ABUTMENT BEARING AT GIRDER G2 – LEFT SIDE (TYPICAL)

PHOTO 5



DESCRIPTION: BEGIN ABUTMENT BEARING AT GIRDER G9 – RIGHT SIDE

PHOTO 6



DESCRIPTION: BEGIN ABUTMENT BACKWALL – RIGHT SIDE

PHOTO 7



DESCRIPTION: BEGIN ABUTMENT STEM

PHOTO 8



DESCRIPTION: BEGIN ABUTMENT – RIGHT SIDE

PHOTO 9



DESCRIPTION: END APPROACH JOINT WITH DECK – LOOKING FROM RIGHT TO LEFT

PHOTO 10



DESCRIPTION: END JOINT WITH DECK LEFT LANE – LOOKING FROM LEFT TO RIGHT

PHOTO 11



DESCRIPTION: END JOINT WITH DECK AT LEFT SHOULDER – LOOKING FROM LEFT TO RIGHT

PHOTO 12



DESCRIPTION: END ABUTMENT BEARING AT GIRDER G9 – RIGHT SIDE (TYPICAL OF BEARING AT GIRDER G1)

PHOTO 13



DESCRIPTION: END ABUTMENT BEARING AT GIRDER G2 – LEFT SIDE (TYPICAL OF GIRDERS G3-G8)

PHOTO 14



DESCRIPTION: END ABUTMENT BEARING AT GIRDER G9 – RIGHT SIDE (TYPICAL ALL)

PHOTO 15



DESCRIPTION: END ABUTMENT PEDESTAL P9 – LEFT SIDE

PHOTO 16



DESCRIPTION: END ABUTMENT BACKWALL - BAY 3

PHOTO 17



DESCRIPTION: END ABUTMENT BACKWALL AT GIRDER G9 – LOOKING FROM RIGHT TO LEFT

PHOTO 18



DESCRIPTION: END ABUTMENT STEM – LOOKING FROM RIGHT TO LEFT

PHOTO 19



DESCRIPTION: BEGIN APPROACH AT RIGHT – LOOKING FROM LEFT TO RIGHT

PHOTO 20



DESCRIPTION: BEGIN APPROACH PAVEMENT AT THE DECK – LOOKING FROM LEFT TO RIGHT

PHOTO 21



DESCRIPTION: END APPROACH SETTLEMENT – LOOKING FROM LEFT TO RIGHT

PHOTO 22



DESCRIPTION: TOP OF DECK – LOOKING FROM BEGIN TO END

PHOTO 23



DESCRIPTION: CURB AT LEFT – LOOKING FROM END TO BEGIN

PHOTO 24



DESCRIPTION: SAFETY WALK AT LEFT – LOOKING FROM END TO BEGIN

PHOTO 25



DESCRIPTION: SAFETY WALK AT RIGHT – LOOKING FROM BEGIN TO END

PHOTO 26



DESCRIPTION: LEFT FASCIA AT ¾ SPAN (TYPICAL)

PHOTO 27



DESCRIPTION: LEFT FASCIA AT ¾ SPAN (TYPICAL)

PHOTO 28



DESCRIPTION: RIGHT FASCIA AT BEGIN – LOOKING FROM END TO BEGIN

PHOTO 29



DESCRIPTION: RIGHT FASCIA AT ¼ SPAN – LOOKING FROM END TO BEGIN

PHOTO 30



DESCRIPTION: RIGHT FASCIA AT MID SPAN

PHOTO 31



DESCRIPTION: RAILING AT RIGHT – LOOKING FROM END TO BEGIN (TYPICAL)

PHOTO 32



DESCRIPTION: RIGHT RAILING CONNECTION AT MID-SPAN – LOOKING FROM BEGIN TO END (TYPICAL)

PHOTO 33



DESCRIPTION: RIGHT RAILING SNOW FENCE – LOOKING FROM END TO BEGIN (TYPICAL)

PHOTO 34



DESCRIPTION: DECK NEAR LEFT SHOULDER AT ¼ SPAN – LOOKING FROM LEFT TO RIGHT

PHOTO 35



DESCRIPTION: DECK NEAR LEFT SHOULDER AT 1/3 SPAN – LOOKING FROM LEFT TO RIGHT

PHOTO 36



DESCRIPTION: DECK PATCH RIGHT LANE NEAR MID-SPAN – LOOKING FROM END TO BEGIN

PHOTO 37



DESCRIPTION: MAPCRACKS BAY 1 AT BEGIN (TYPICAL)

PHOTO 38



DESCRIPTION: DECK BAY 1 AT BEGIN – LOOKING FROM END TO BEGIN

PHOTO 39



DESCRIPTION: DECK BAY 3 NEAR DIAPHRAGM D4 – LOOKING FROM END TO BEGIN

PHOTO 40



DESCRIPTION: DECK BAY 5 PATCHES NEAR DIAPHRAGM 6 – LOOKING FROM END TO BEGIN

PHOTO 41



DESCRIPTION: DECK BAY 6 NEAR DIAPHRAGM D2 – LOOKING FROM BEGIN TO END

PHOTO 42



DESCRIPTION: DECK BAY 8 AT BEGIN – LOOKING FROM END TO BEGIN

PHOTO 43



DESCRIPTION: FRAMING – LOOKING FROM BEGIN TO END

PHOTO 44



DESCRIPTION: FRAMING – LOOKING FROM RIGHT TO LEFT

PHOTO 45



DESCRIPTION: GIRDER G2 LEFT SIDE – LOOKING FROM BEGIN TO END

PHOTO 46



DESCRIPTION: GIRDER G9 RIGHT SIDE – LOOKING FROM END TO BEGIN

PHOTO 47



DESCRIPTION: GIRDER G9 RIGHT SIDE – LOOKING FROM BEGIN TO END

PHOTO 48

ASBESTOS SAMPLING SURVEY

Asbestos Sampling Survey

Location:

BIN 1093530
Interstate Route I-481 South Bound
over Interstate Route I-690

Prepared for:

New York State
Department of Transportation

PIN 3056.13.111

LaBella Project No. 201001

August 2001

BIN 1093530
Interstate Route I-481 South Bound over Interstate Route I-690

Note:

The above referenced bridge was previously surveyed for the presence of asbestos-containing materials (ACMs) in March of 2001. Based on laboratory analyses of bulk samples collected at that time, the following material was determined to contain asbestos:

Type of Material	Estimated Amount
Sheet Packing	11 square meters

See LaBella Associates report, dated March 2001 (NYSDOT PIN 3804.52.101) for more information.

Asbestos Sampling Survey

Location:

BIN 1093530
Interstate Route I-481 South Bound
over Interstate Route I-690

Prepared for:

New York State
Department of Transportation

PIN 3804.52.101

LaBella Project No. 97132

March 2001

Table of Contents

Page

I. Project Summary 1

II. Site Description 1

III. Inspection Procedures 1

IV. Results 2

Certification 2

Figures and Table

I. Project Summary

In accordance with conditions of Term Agreement D010010, LaBella Associates, P.C. conducted an asbestos sampling survey of the Interstate Route I-481 South Bound bridge over Interstate Route I-690. Based on laboratory analyses of bulk samples collected, the following material was determined to contain asbestos:

BIN 1093530 Interstate Route 481 South Bound over Interstate Route I-690

Type of Material	Estimated Amount
Sheet Packing	11 Square Meters

II. Site Description

The Site is located in Onondaga County, New York. For the purpose of this report, the Site consists of the Interstate Route I-481 South Bound bridge over Interstate Route I-690 (See attached FIGURE 1 - Site Location Map).

III. Inspection Procedures

The following procedures were used to obtain the data for this Report:

A. A review of record drawings supplied by Region 3 personnel and a visual inspection of the subject structure were conducted to identify potential visible/accessible sources of asbestos-containing materials. Observations and notes were made to provide a description of the structure, and an estimate of the approximate amount, length, or area of ACM present.

B. Physical or operational constraints, which might affect the removal of the ACM, were identified and reported.

C. Bulk samples of suspected ACM were collected during the site inspection of the subject structure. Samples were taken from each homogeneous area that may contain ACM.

D. Samples were submitted for analysis. Preliminary PLM analyses of NOB materials were performed by LaBella Laboratories, a NYSDOH approved laboratory, to determine the presence and percentage of asbestos in each sample. TEM analyses of NOB materials, if necessary, were performed by AMA Analytical, Inc.

E. Lab results were used to determine the approximate location, type, and amount of the verified ACM.

F. A drawing of the structure at the Site was created, in order to show sample locations and the approximate locations and amounts of confirmed ACM observed in accessible locations.

Only accessible areas were inspected. Inaccessible areas, such as areas within the bridge or the approaches to the bridge were not included in this inspection. No investigation was conducted by LaBella Associates to determine the presence of underground utilities on or in the immediate vicinity of the Site. Actual sample locations are shown in the attached FIGURE 2. Results of bulk sample analyses are tabulated in the attached TABLE.

IV. Results

BIN 1093530 Interstate Route I-481 South Bound over I-690

Sheet Packing

Asbestos-containing sheet packing is located between the tops of the abutments and the deck slab at both ends of the bridge. Most of this material is presently covered by the bridge deck, although the edges of this sheet packing are exposed and visible at various locations. It is estimated that the total amount of this asbestos-containing sheet packing material on the bridge is approximately 11 square meters. This estimate is based on field measurements taken at the time of the site visit.

The approximate locations of this asbestos-containing sheet packing are shown in FIGURE 2.

Certification

LaBella Associates, P.C. certifies the accuracy of this report, to the best of our knowledge, based on the information collected as described in the Inspection Procedures Section of this investigation.

Figures & Table

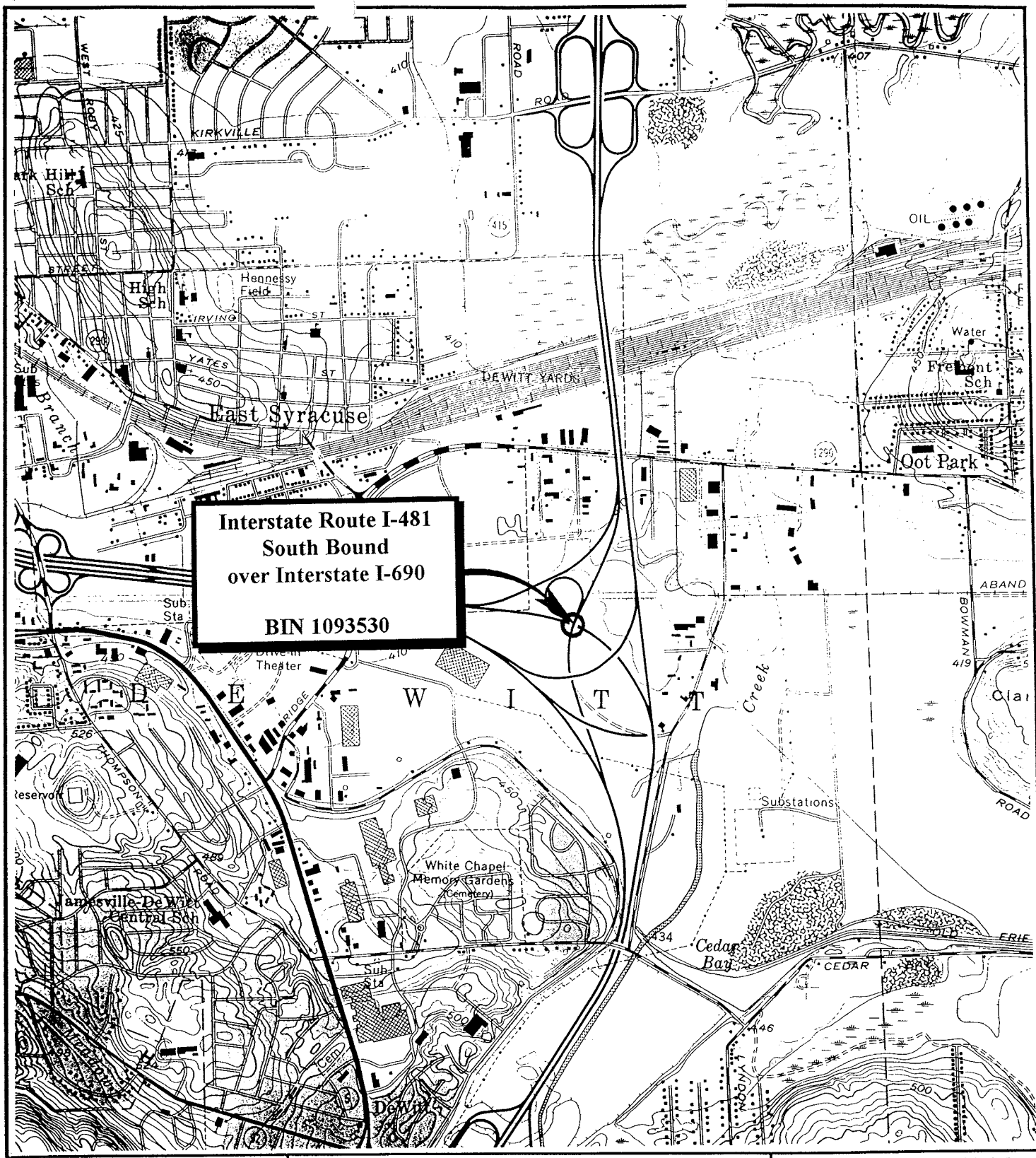

FIGURE 1
Site Location Map

Interstate Route I-481 South Bound
over Interstate Route I-690
Onondaga County, New York

SCALE: 1" = 2000'

PROJECT NO. 97132

I-481
BIN 1093530

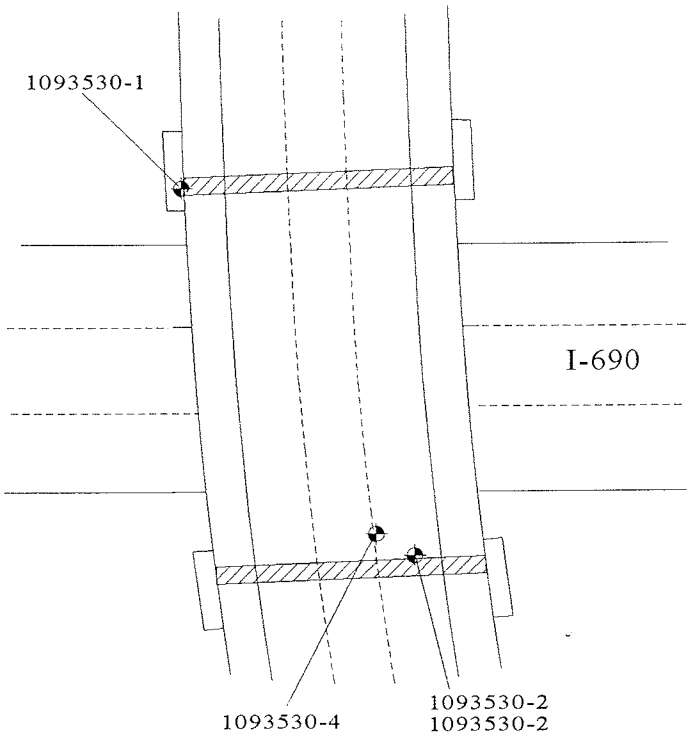

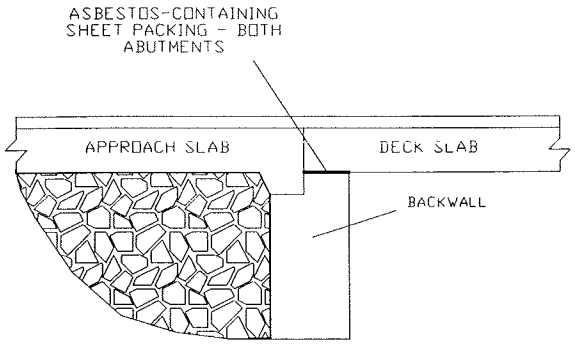

TYPICAL ABUTMENT SECTION

LEGEND

1093530-1 SAMPLE LOCATION

ASBESTOS-CONTAINING SHEET PACKING

NORTH

PROJECT TITLE: ASBESTOS SAMPLING SURVEY 11 BRIDGES ONONDAGA COUNTY, NY	PROJECT NO. 97132 PIN 3804.52.101
FIGURE TITLE: FIGURE 2 - BIN 1093530 I-481 SOUTH BOUND OVER I-690 SAMPLE LOCATIONS AND CONFIRMED ACM	DRAWN BY: TJK DATE: MARCH, 2001

Bulk Sample Results Table

Asbestos Sampling Survey
BIN 1093530
Interstate Route 481 South Bound
over Interstate Route I-690
Onondaga County, New York
LaBella Project # 97132
PIN 3804.52.101

Sample #	Sample Location	Type of Material	Results % Asbestos	Amount of Material	Specification Item No.
1093530-1	**North End of Bridge Between Deck & Abutment**	**Sheet Packing**	**43% Chrysotile**	**11 Square Meters**	**15202.063401 (M)**
1093530-2	South End of Bridge Under Bearing	Bearing Pad	None Detected	N/A	N/A
1093530-3	South Abutment Face	Gray Masonry Coating	None Detected	N/A	N/A
1093530-4	South End of Bridge on I-Beam	Green Paint	None Detected	N/A	N/A

HES

HUDSON ENVIRONMENTAL SERVICES, INC.
Mail: 22 Hudson Falls Rd., So. Glens Falls, NY 12803
Delivery: 211 Ferry Blvd., So. Glens Falls, NY 12803
Phone: 518/747-1060 Fax: 518/747-1062

ANALYTICAL TEST RESULTS
N.Y.S.D.O.H. LAB ID#11140
*ANALYZED BY N.Y.S.D.O.H. LAB ID#10898

CLIENT: NYSDOT

SAMPLE DESCRIPTION: See Below

MATRIX: Solid

LOCATION: BIN 1093530

H.E.S. #: See Below

DATE SAMPLED: 04/02/03

TIME SAMPLED: 2:00 PM

DATE SAMPLE RECD: 04/14/03

TYPE SAMPLE: Grab

SAMPLER: G.Cook/NYSDOT

NOB BULK MATERIAL ANALYSIS FOR ASBESTOS

HES LAB ID#: 030414G	G01	G02	G03
LAB ID#: E03	910	911	912
CLIENT: SAMPLE ID/DESCRIPTION	1093530-01 G7, 8M from end	1093530-02 G6, 4M from end	1093530-03 G2, 10M From end
COLOR	Green	Green	Green
HOMOGENEOUS(YES/NO)	Yes	Yes	Yes
ORGANIC %	45	49	46
ACID-SOLUBLE INORGANICS %	9	7	6
INSOL NON-ASBESTOS INORGANIC %	46	44	48
ASBESTOS ANALYSIS			
CHRYSOTILE %			
AMOSITE %			
CROCIDOLITE %			
OTHER AMPHIBOLE %			
TOTAL ASBESTOS % (PLM)	ND	ND	ND
ASBESTOS ANALYSIS			
TYPE OF ASBESTOS			
PERCENTAGE OF ASBESTOS (TEM)	ND	ND	ND
TOTAL	100	100	100

Approval By: [signature]

Date: 4/23/03

Hudson Environmental Services, Inc. certifies that the services provided were performed in accordance with the New York State Department of Health, Environmental Laboratory Approval Program certification manual. In the event of an error, HES's sole responsibility will be to perform reanalysis at its own expense. HES, Inc. assumes no other liability for damages incurred from the interpretation or use of the analysis provided.

R-3 DESIGN GROUP
APR 2 8 2003
R.D.E.
Highway Design
Landscape
Engr. Liaison
Geotech
ROW
Tests
Structures
Skelly

(OVER)

HUDSON ENVIRONMENTAL SERVICES, INC.

Mail: 22 Hudson Falls Road, South Glens Falls, NY 12803
Delivery: 211 Ferry Blvd., South Glens Falls, NY 12803
Phone: 518/747-1060 Fax: 518/747-1062

CHAIN OF CUSTODY RECORD/ Lab Work Request

Client NYS Dept. of Transportation-Region 3
Client Contact/Person # Christopher Anderson
Project Location B.I.N.
Purchase Order
HES Contact William Frawley

Mail Address NYS Dept. of Transportation
333 E. Washington Street
Syracuse, NY 13202
Phone # (315) 428-4628

HES Use Only Lab ID	Sample ID / Description	Date Collected	TIME A=a.m. P=p.m.	SAMPLE TYPE C=Composite G=Grab MATRIX	C	G	# Conts.	ANALYSIS REQUIRED
03041401	1093530-01, G2, 8m steam end		A P	SO		X	1	Asbestos Bulk - NOB
02	1093530-02, G6, 4m steam end		A P	SO		X	"	"
03	1093530-03, G2, 10m steam end		A P	SO		X	"	"
			A P					
			A P					
			A P					
			A P					

Matrix: S-Soil, SE-Sediment, SO-Solid, SL-Sludge, O-Oil, DW-Drinking Water, GW-Ground Water, SW-Surface Water, L-Leachate, A-Air, WI-Wipe, DS-Drum Solids, DL-Drum Liquids, X-Other, WW-Waste Water

Special Instructions: Bridge coating - If PLM negative, TEM confirmation on all.

Relinquished by: (Signature)	Date/Time 4/2/03 2000	Received by: (Signature)	Date/Time 4-16-03 12:38 PM
Relinquished by: (Signature)	Date/Time	Received by: (Signature)	Date/Time
Relinquished by: (Signature)	Date/Time	Received by: (Signature)	Date/Time
Dispatched by: (Signature)	Method of Shipment:		Date/Time
Received @ Lab by:	Date/Time 4/17/03 1:50 PM	Turnaround Time: Normal	Lab Approval:

HES Use Only

Samples Were: Shipped or Hand Delivered NOTES:

2. Arrived on Ice or Chilled NOTES:

3. Received Broken/ Leaking (Improperly Sealed) Y N NOTES:

4. Properly Preserved NOTES: Y N

5. Received Within Holding Times Y N NOTES:

COC Tape Was:
1. Present on Outer Package Y N
2. Unbroken on Outer Package Y N
3. Present on Sample Y N
4. Unbroken on Sample NOTES: Y N

COC Record Was:
1. Present upon Receipt of Samples Y N

Discrepancies Between Sample Labels and COC Record? Y N NOTES:

WHITE - Lab Copy YELLOW - Sampler Copy PINK - Generator Copy

Apr-18-03 11:24A Ver. P. Kukreja, Ph.D. P.11

LATEST BIENNIAL INSPECTION REPORT

Inspection Date: 5/30/2013 RC: 33 BIN: 1093530

Bridge Ratings

Carried: 481I 481I33012062 Crossed: 690I 690I33013015 CheckValue: 1,819,422,034

Inspection Agency: 10 - NYSDOT Type of Inspection: 1 - BIENNIAL
GTMS: 302 -- Steel - Stringer/Multi-Beam or Girder
POSTINGS: See Gen Rec Page 1 for Postings at time of inspection.
Further Investigation Needed: No
State Highway Number: 70-7 Milepoint: 1.6 AADT/Yr: 19511 / 2002
Orientation: 2 - Northeast Political Unit: 0233 - Town of DEWITT Year Built: 1972
Total Spans: 1 Ramp Bridge Attached To Span: NA BIN: NA
General Recommendation: 5 Computed Condition Rating: 5.047

Abutment Ratings:	Beg Abut	End Abut
Joint with Deck	8	5
Bearings, Bolts, Pads	4	4
Seats and Pedestals	5	5
Backwall	5	4
Stem (Breastwall)	6	6
Erosion or Scour	5	5
Footings	9	9
Piles	8	8
Recommendation	5	5

Wingwall Ratings:	Beg Abut	End Abut
Walls	5	5
Footings	9	9
Erosion or Scour	6	6
Piles	8	8

Channel Ratings:	Channel
Stream Alignment	8
Erosion and Scour	8
Waterway Opening	8
Bank Protection	8

Approach Ratings:	Approaches
Drainage	5
Embankment	4
Settlement	5
Erosion	4
Pavement	4
Guide Railing	6

Number of Flags Issued:

RED: 0 Yellow: 0 Safety: 0

Vulnerability Reviews Recommended: 1=Yes, 2=No, 3=NA, X=NotActive

Hydraulic: 3	Overload: X	Steel: 2
Collision: 2	Concrete: X	Seismic: X

Inspector's Signature: CheckValue: 1,819,422,034 Date: 5/30/2013

Peter Riehlman,PE () (Inspector ID:3000052)

Signed copy of this inspection report is available in the appropriate NYSDOT Regional Office

Reviewed By: Date: 7/10/2013

James R. Manning,PE () (QC ID:3000023)

Signed copy of this inspection report is available in the appropriate NYSDOT Regional Office

Inspection Date: 5/30/2013 RC: 33 BIN: 1093530

Span Ratings

Carried: 481I 481I33012062 Crossed: 690I 690I33013015 CheckValue: 1,819,422,034

Deck Element Ratings:	**001**
Wearing Surface	5
Curbs	6
Sidewalks, Fascias	4
Railings, Parapets	5
Scuppers	8
Gratings	8
Median	8
Mono Deck Surface	5

Superstructure Ratings:	**001**
Structural Deck	4
Primary Members	6
Secondary Members	6
Paint	4
Joints	8
Recommendation	5

Pier Ratings:	**001**
Bearings, Bolts, Pads	8
Pedestals	8
Top of Cap or Beam	8
Stem Solid Pier	8
Cap Beam	8
Pier Columns	8
Footings	8
Erosion or Scour	8
Piles	8
Recommendation	8

Utility Ratings:	**001**
Lighting	8
Sign Structure	8
Utilities and Support	8

Field Notes:

Field Date	Arrival	Departure	Temp (C)	Temp (F)	Weather Conditions
5/3/2013	9:00:00 AM	11:45:00 AM		50	ptly cldy.
5/30/2013	9:00:00 AM	10:00:00 AM		80	ptly. cldy

Inspection Date: 5/30/2013 RC: 33 BIN: 1093530

Inspection Notes

Carried: 481I 481I33012062 Crossed: 690I 690I33013015 CheckValue: 1,819,422,034

Note ID: 331310935300000

Beg Abut -- Abutment: Bearings, Bolts, Pads -- Rated 4, Was 4
End Abut -- Abutment: Bearings, Bolts, Pads -- Rated 4, Was 4
Referenced Photos: "14"
2013 - The begin and end fascia bearings are pack rusted.

Note ID: 331310935300000B

Beg Abut -- Abutment: Backwall -- Rated 5, Was 4
Referenced Photos: "2", "4"
2013- beg backwall has been repaired.

Note ID: 331310935300003

Beg Abut -- Abutment: Stem (Breastwall) -- Rated 6, Was 4
End Abut -- Abutment: Stem (Breastwall) -- Rated 6, Was 4
Referenced Photos: "3"
2013- areas have been patched since last inspection

Note ID: 331310935300004

Approaches: Embankment -- Rated 4, Was 4
Approaches: Erosion -- Rated 4, Was 4
Referenced Photos: "5"
2013 - At the end of the asphalt placed for erosion protection it is spalling away and eroding the stone. The begin right embankment has several small gullies and small soil slough offs up to 100' from the bridge.

Note ID: 331310935300009

Approaches: Settlement -- Rated 5, Was 5
Referenced Photos: "9"
2013-Asphalt pavement adjacent to the bridge has been resurfaced and is in fair condition.

Note ID: 331310935300005

Approaches: Pavement -- Rated 4, Was 4
Referenced Photos: "6", "9", "12"
2013 - The center of the joint has a spalled area approx. 1' wide by 3" deep. The asphalt pavement is mapcracked and the concrete joint header is spalling next to asphalt.

Note ID: 331310935300008

Span 001 -- Deck Elements: Sidewalks, Fascias -- Rated 4, Was 4
Referenced Photos: "8"
2013 - The right fascia has a small area spalled and the rest of the fascia edge is hairline mapcracked with some efflor leakage. The left fadcia has some spall areas.

Inspection Date: 5/30/2013 RC: 33 BIN: 1093530

Inspection Notes

Carried: 481I 481I33012062 Crossed: 690I 690I33013015 CheckValue: 1,819,422,034

Note ID: 331310935300006

Span 001 -- Superstructure: Structural Deck -- Rated 4, Was 4
Referenced Photos: "10", "11", "15"
2013 - The deck is hairline mapcracked throughout, but there are delaminations and hollow areas in bay 4 (over live traffic). Bay 8, at the end has an approx. 3' round delaminated area. The area in bay 4 that was safety flagged in 2011 has been patched.

Note ID: 331310935300007

Span 001 -- Superstructure: Paint -- Rated 4, Was 4
Referenced Photos: "7"
2013 - The paint is peeling on approx. 10% of total steel area, localized near center of bridge and to the bottom flanges mostly.

Note ID: 331310935300001

End Abut -- Abutment: Joint with Deck -- Rated 5, Was 4
Referenced Photos: "12"
2013 Joint with deck has been patched and end approach pavement is cracked and raveled. End approach pavement has transverse cracks 5' from the bridge. condition rates 5.

Note ID: 331310935300000A

End Abut -- Abutment: Backwall -- Rated 4, Was 4
Referenced Photos: "13"
2013 - Bridge is superelevated to the right which directs water over that edge of the bridge resulting in localized spalls on backwalls in upper right corners. At the end the spall is 12"H by 8"W by 6"D.

Inspection Date: 5/30/2013 RC: 33 BIN: 1093530

Inspection Photos in Photo Number Order

Carried: 481I 481I33012062 Crossed: 690I 690I33013015 CheckValue: 1,819,422,034

Location:
Beg Rt backwall



Photo Number: 2 Photo Filename: DSCN0387.jpg

Beg Rt stem (typ)



Photo Number: 3 Photo Filename: DSCN0384.jpg

Inspection Date: 5/30/2013 RC: 33 BIN: 1093530

Inspection Photos in Photo Number Order

Carried: 481I 481I33012062 Crossed: 690I 690I33013015 CheckValue: 1,819,422,034

Location:
Beg Lt backwall



Photo Number: 4 Photo Filename: DSCN0386.jpg

Beg Rt appr erosion gulley



Photo Number: 5 Photo Filename: DSCN0391.jpg

Inspection Date: 5/30/2013 RC: 33 BIN: 1093530

Inspection Photos in Photo Number Order

Carried: 481I 481I33012062 Crossed: 690I 690I33013015 CheckValue: 1,819,422,034

Beg appr looking Lt



Photo Number: 6 Photo Filename: DSCN0389.jpg

Framing looking toward End



Photo Number: 7 Photo Filename: DSCN0385.jpg

Inspection Date: 5/30/2013 RC: 33 BIN: 1093530

Inspection Photos in Photo Number Order

Carried: 481I 481I33012062 Crossed: 690I 690I33013015 CheckValue: 1,819,422,034

Beg Rt fascia



Photo Number: 8 Photo Filename: DSCN0388.jpg

Beg Rt appr looking toward End



Photo Number: 9 Photo Filename: DSCN0390.jpg

Inspection Date: 5/30/2013 RC: 33 BIN: 1093530

Inspection Photos in Photo Number Order

Carried: 481I 481I33012062 Crossed: 690I 690I33013015 CheckValue: 1,819,422,034

Bay 6 deck near Beg



Photo Number: 10 Photo Filename: DSCN0551.jpg

Location:
Bay 8 End deck



Photo Number: 11 Photo Filename: DSCN0547.jpg

Inspection Date: 5/30/2013 RC: 33 BIN: 1093530

Inspection Photos in Photo Number Order

Carried: 481I 481I33012062 Crossed: 690I 690I33013015 CheckValue: 1,819,422,034

End joint/appr pavt looking Lt



Photo Number: 12 Photo Filename: DSCN0553.jpg

End Rt backwall looking from Bay 8

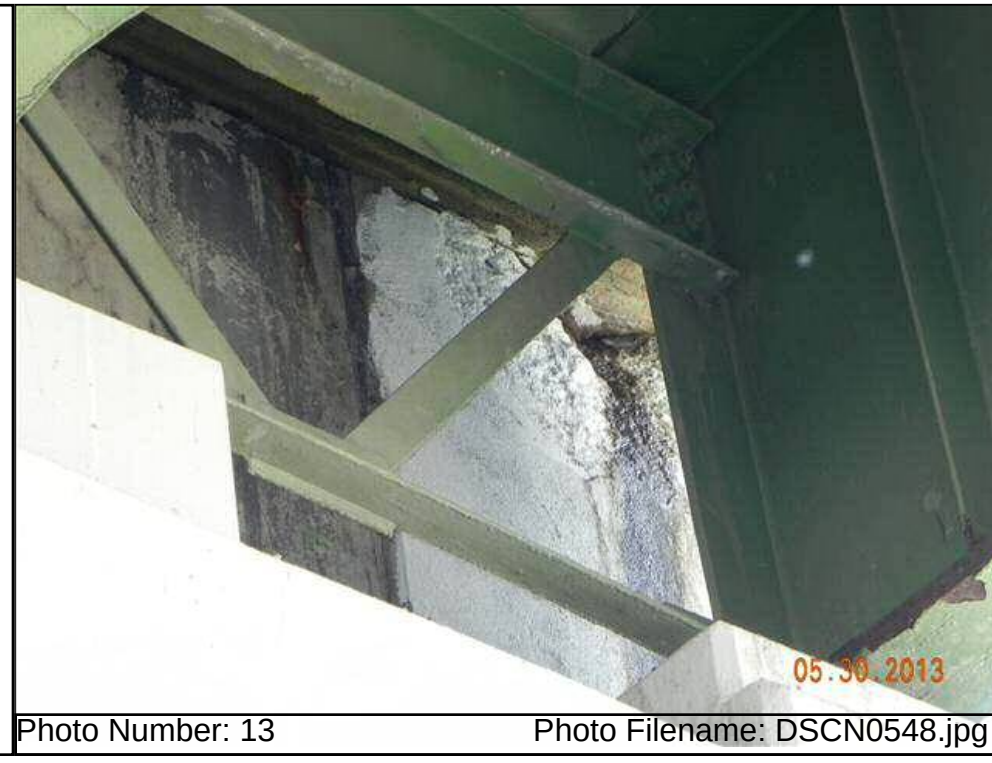

Photo Number: 13 Photo Filename: DSCN0548.jpg

Inspection Date: 5/30/2013 RC: 33 BIN: 1093530

Inspection Photos in Photo Number Order

Carried: 481I 481I33012062 Crossed: 690I 690I33013015 CheckValue: 1,819,422,034

End Brg #9 (typ)



Photo Number: 14 Photo Filename: DSCN0549.jpg

Location:
Bay 3 deck just before 4th dia. looking toward Beg

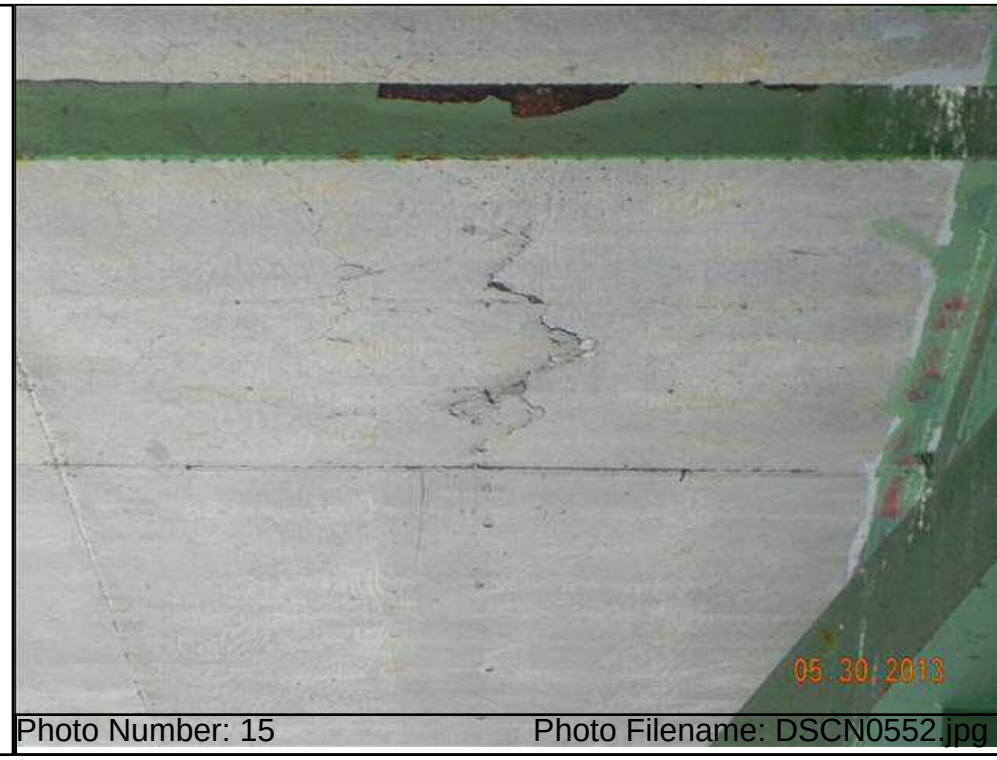

Photo Number: 15 Photo Filename: DSCN0552.jpg

Inspection Date: 5/30/2013 RC: 33 BIN: 1093530

Inspection Sketches in Sketch SysID Order

Carried: 481I 481I33012062 Crossed: 690I 690I33013015 CheckValue: 1,819,422,034

Sketch ID: 331310935300000 Sketch Filename: LdRatNCL.13

General Sketch for Bridge
Referenced Photos:

Region 3 LoadRatingFieldCheckForm

NYSDOT BRIDGE INSPECTION REPORT			
SHEET	1	OF	1

LOAD RATING FIELD CHECK FORM

BIN:	1093530	Insp. Date:	05/14/2013

Dead Load - Note Changes since Last load Rating or state "NONE":

NONE

Section Loss -Note Changes since Last load Rating or state "NONE":

NONE

Additional Notes:

NONE

Attachments:

Team Leader: Peter Riehlman

Inspection Date: 5/30/2013 RC: 33 BIN: 1093530

Inspection Sketches in Sketch SysID Order

Carried: 481I 481I33012062 Crossed: 690I 690I33013015 CheckValue: 1,819,422,034

Sketch ID: 331310935300001 Sketch Filename: deck sketch.tif

Span 001 -- Superstructure: Structural Deck -- Rated 4, Was 4
Referenced Photos: "10", "11", "15"

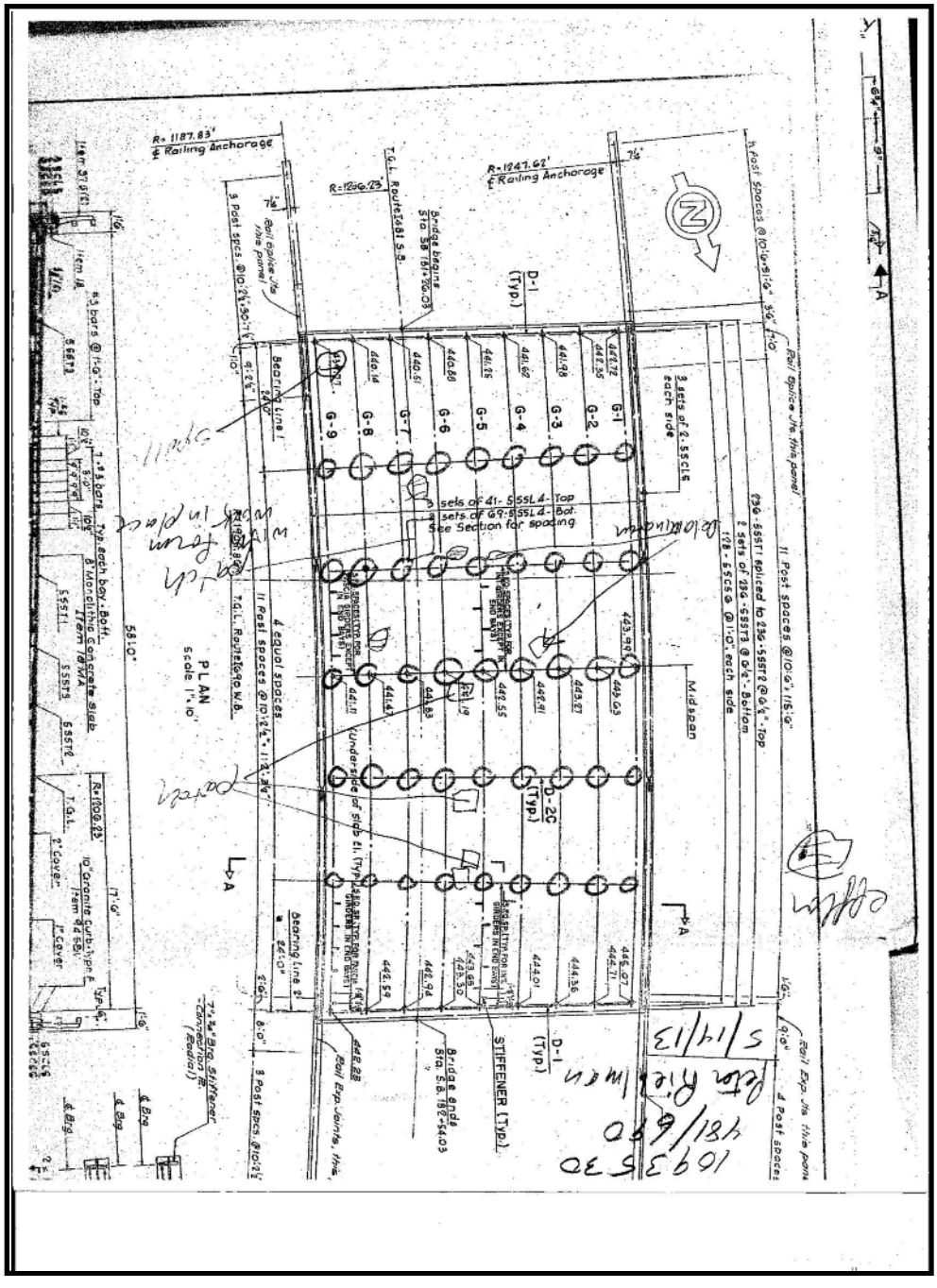

Inspection Date: 5/30/2013 RC: 33 BIN: 1093530

Gen. Rec., Postings, Federal Ratings, etc.

Carried: 481I 481I33012062 Crossed: 690I 690I33013015 CheckValue: 1,819,422,034

Overall Condition:

GENERAL RECOMMENDATION: 5

Computed Condition Rating: 5.047

Problems Requiring Action:

NO Further Investigation Needed

NO Flags Issued

POSTINGS:

Inspector Confirmed existing Posting data as correct.
Posted Vertical Clearance ON the bridge is: No Posting
Posted Vertical Clearance UNDER the bridge is: No Posting
No Load Restriction is posted on this bridge

Overloads Observed:

NO Overload Vehicles were observed on this bridge

FEDERAL RATINGS:

NBI Deck Condition: 4
NBI Superstruct Condition: 6
NBI Substruct Condition: 5
NBI Channel Condition: N
NBI Culvert Condition: N

Diving Inspection Needs:

Diving Inspection Required? No Date of Last Diving Inspection: No Date

Inventory Problems:

Inventory Problems Exist? No

Miscellaneous:

Time Required to Inspect Bridge: 4 Hours

Lane Closure Needs: By Contract for 3 Hours

No Railroad Flagging Required

No Pedestrian Fence

There is a Snow Fence present

The BIN Plate is in OK condition

Inspection Date: 5/30/2013 RC: 33 BIN: 1093530

Gen. Rec., Postings, Federal Ratings, etc.

Carried: 481I 481I33012062 Crossed: 690I 690I33013015 CheckValue: 1,819,422,034

Special Emphasis Inspection Required:

Non-Redundant/Fracture Critical Members - No
Pin and Hangers - No
Fatigue-Prone Welds - Yes
Non-Categorized Fatigue-Prone Details - No
Other (Specified in Text) - No

Special Emphasis Details:

Gusset plate welds - 100% hands-on inspection, non-exempt ever due to curved girders.

General Notes To the Next Inspector:

Bin plate on the end abutment.

Improvements Observed:

Inspection Date: 5/30/2013 RC: 33 BIN: 1093530

Review Progress and Personnel Present at Inspection

Carried: 481I 481I33012062 Crossed: 690I 690I33013015 CheckValue: 1,819,422,034

Inspection Submission Status:

Submitted to QC Engineer on: 7/9/2013
QC Submission Number: 35330602

QC Review Completed: 7/10/2013
QC Engineer: James R. Manning

Submitted to Liaison Engineer on: 7/10/2013
Liaison Submission Number: 53314

Liaison Review Completed: 7/11/2013
Liaison Engineer: TODD M. HERMANN

Submitted for BIIS Processing on: 7/11/2013
BIIS Submission Number: .kp1

Current Status: Keypunched, Sent to BIIS
Check Value: 1,819,422,034

Personnel Present During Inspection:

Peter Riehlman	- Team Leader
Rebecca Maurer	- Assistant Team Leader
Charlie Miller	- lane closure
Anthony Nordland	- lane closure
Paul Russell	- lane closure

Inspection Date: 5/30/2013 RC: 33 BIN: 1093530

Inspection Access Requirements

Carried: 481I 481I33012062 Crossed: 690I 690I33013015 CheckValue: 1,819,422,034

Equipment Required for Inspection

Access Requirement Changes WERE Noted During This Inspection.
This Listing is from the Inspection.

ACCESS CATEGORIES FOR ENTIRE BRIDGE
Required: Walking, Small Lift, Lane Closure, Shadow Vehicle

ACCESS CATEGORIES FOR SPAN 1
Required: Walking, Small Lift, Lane Closure, Shadow Vehicle

Inspection Date: 5/30/2013 RC: 33 BIN: 1093530

Culvert Measurements

Carried: 481I 481I33012062 Crossed: 690I 690I33013015 CheckValue: 1,819,422,034

Culvert Measurements

NO CULVERT DATA FOR BIN 1093530

Standard Photos **RC: 33 BIN: 1093530**

Carried: 481I 481I33012062 Crossed: 690I 690I33013015

1093530_LOCATION_MAP.JPG

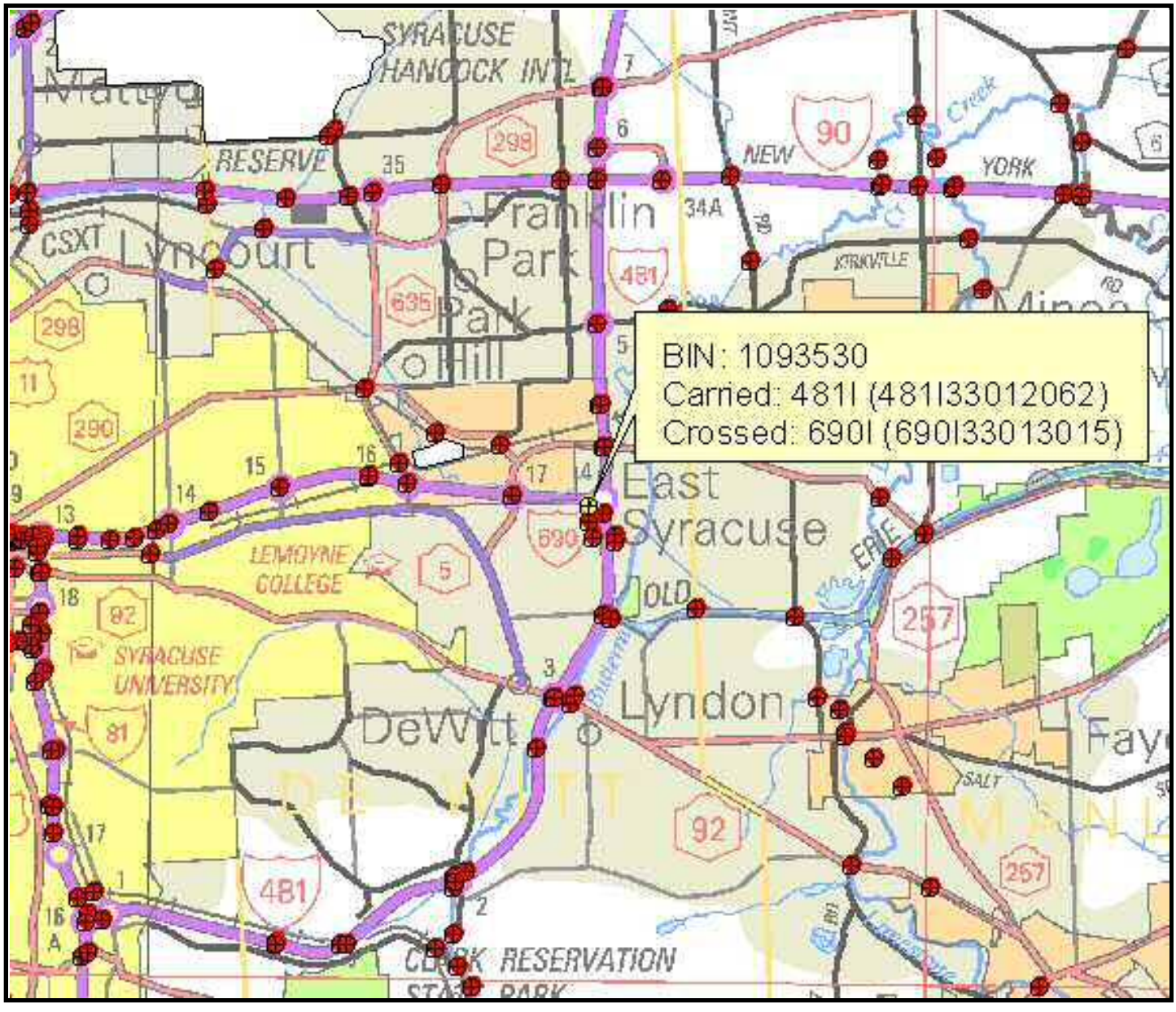

Standard Photos **RC: 33 BIN: 1093530**

Carried: 481I 481I33012062 Crossed: 690I 690I33013015

1093530_QUAD_MAP.JPG

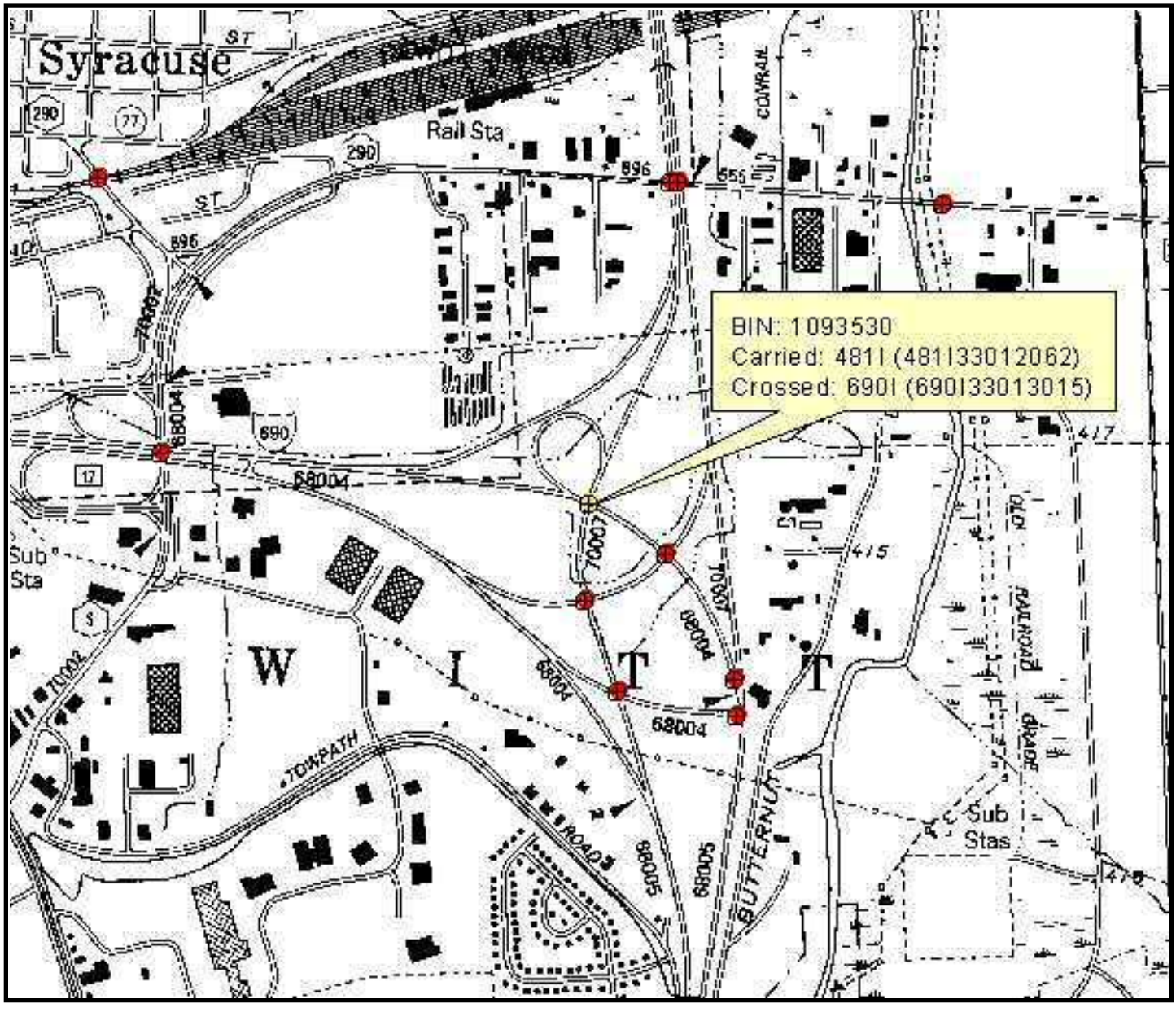

BeginAbutment11.jpg



Standard Photos **RC: 33 BIN: 1093530**

Carried: 481I 481I33012062 Crossed: 690I 690I33013015

BeginApproach11.jpg



BeginLeftWingwall11.jpg



Standard Photos **RC: 33 BIN: 1093530**

Carried: 481I 481I33012062 Crossed: 690I 690I33013015

EndApproach11.jpg



Standard Photos **RC: 33 BIN: 1093530**

Carried: 481I 481I33012062 Crossed: 690I 690I33013015

F2Left11.jpg



F2Right11.jpg



Standard Photos **RC: 33 BIN: 1093530**

Carried: 481I 481I33012062 Crossed: 690I 690I33013015

RightElevation11.jpg

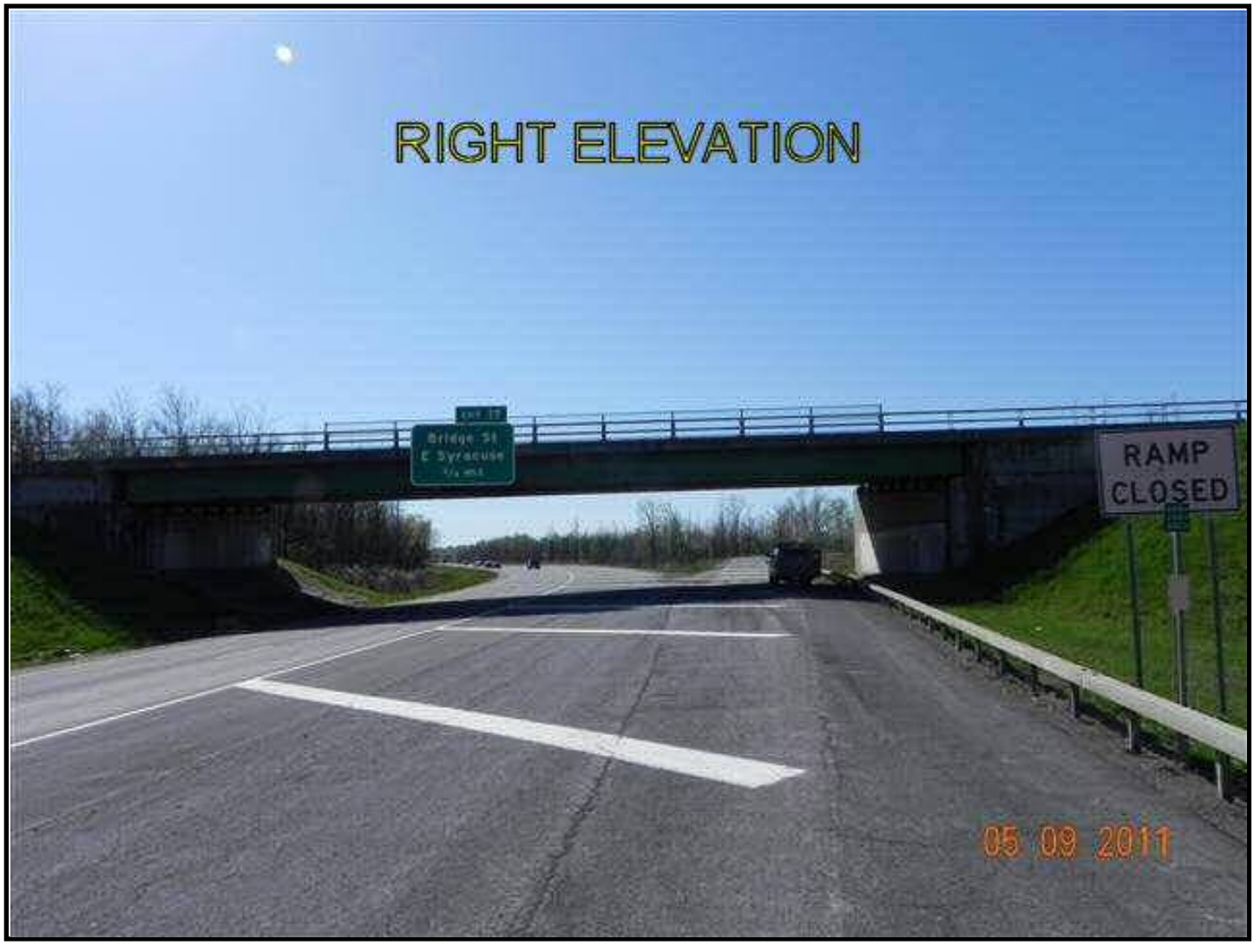

Standard Photos **RC: 33 BIN: 1093530**

Carried: 481I 481I33012062 Crossed: 690I 690I33013015

Underside11.jpg



LEVEL 1 LOAD RATING SUMMARY SHEET

Region/County Region 3/Onondaga BIN 1093530
Feature(s) Carried and Crossed I-481 SB/ I-481 NB to I-690 WB Ramp
Date of field inspection upon which Level 1 rating is based 1/16/2014

OVERALL BRIDGE RATINGS (BASED ON LOWEST RATED ELEMENTS):

Total number of rating units 1

	H inventory	H operating	HS inventory	HS operating
Rating	H 28.20 (tons)	H 46.99 (tons)	HS 47.52 (tons)	HS 79.20 (tons)
Lowest rated element	Exterior Girder G1	Exterior Girder G1	Exterior Girder G1	Exterior Girder G1

Analysis method LFR Comments

Individual Rating Unit Level 1 values:

Rating unit span(s) 1

Main member ratings

	H inventory	H operating	HS inventory	HS operating
Rating	H (tons)	H (tons)	HS (tons)	HS (tons)
Lowest rated element				

Analysis method Comments

Floorbeam ratings

	H inventory	H operating	HS inventory	HS operating
Rating	H (tons)	H (tons)	HS (tons)	HS (tons)
Lowest rated element				

Analysis method Comments

Stringer ratings

	H inventory	H operating	HS inventory	HS operating
Rating	H 28.20 (tons)	H 46.99 (tons)	HS 47.52 (tons)	HS 79.20 (tons)
Lowest rated element	Exterior Girder G1	Exterior Girder G1	Exterior Girder G1	Exterior Girder G1

Analysis method LFR Comments

Certified by Date

Quality Control Engineer Signature Date
Agency or Company represented by certifier

Note:
-If connection ratings govern, record them under stringer ratings for stringer – floorbeam connection, floorbeam ratings for floorbeam-main member connections, etc.
-When Level 1 results indicated the need for load posting or other corrective action, the NYSDOT Regional Structures Engineer shall be notified immediately.
-Load ratings should be filed in the regional office within 60 days of completion of calculations.
-Bridges shall be flagged based on Level I results in accordance with the current NYSDOT flagging procedure.
-Bridge load posting, closure, etc. determinations shall be made as results are being produced.

PARSONS

100 Broadway
New York, NY 10005
Phone: 212-266-8300
Fax: 212-571-6825
www.parsons.com

TECHNICAL MEMORANDUM

FROM: Kian Siang Chau, P.E
NYSPE 082744

DATE: APRIL 2, 2014

RE: SEISMIC SCREENING SUMMARY
NEW YORK STATE DEPARTMENT OF TRANSPORTATION
D031085; PIN 3501.60; I-81

BIN: 1093530 (I-481 SB/ I-481 NB Ramp to I-690 WB)

This memorandum summarizes the seismic screening conducted for BIN 1093530 as part of the Interstate 81 Project in Syracuse, NY. The purpose of the screening is to determine if seismic retrofits are warranted at the superstructure to substructure connection, and if further seismic evaluation of the structure is required. This memorandum will give the screening results, retrofits required and recommendations for further seismic evaluation of the structure.

SCREENING PROCEDURE

The seismic screening was performed in accordance with the FHWA Seismic Retrofitting Manual for Highway Structures: Part 1 - Bridges, January 2006. As per the referenced manual, seismic screenings were performed for both lower level and upper level earthquake ground motion. The lower level earthquake ground motion has a reasonable likelihood of occurrence within the life of the bridge (50% probability of exceedance within a 75 year bridge life). The upper level earthquake ground motion has a finite likelihood of occurrence within the life of the bridge (7% probability of exceedance within a 75 year bridge life).

Values for the spectral acceleration for the Syracuse area used in the screening are as follows:

- Lower Level Earthquake Ground Motion for a Short Period (0.2 seconds): $S_S = 0.0251$
- Lower Level Earthquake Ground Motion for a Long Period (1.0 seconds): $S_1 = 0.0076$
- Upper Level Earthquake Ground Motion for a Short Period (0.2 seconds): $S_S = 0.139$
- Upper Level Earthquake Ground Motion for a Long Period (1.0 seconds): $S_1 = 0.047$

These values are considered constant and are the same for all seismic screenings of bridges in the Syracuse area.

The Site Class is based on the soil conditions at the bridge location. It was determined that this parameter has little effect on the results of the seismic screening because the spectral acceleration values for the Syracuse area are small. Based on this, a site class of D was used for all seismic screenings of bridges in the Syracuse area.

Bridge parameters used in the seismic screening were retrieved from the record drawings and WinBolts data.

The seismic screening takes into account the anticipated service life, importance, and the seismic exposure of the bridge to determine a seismic retrofit category (SRC). The SRC is then used to determine seismic evaluation methods and retrofit measures. There are four SRCs, A through D. Seismic retrofit category A is the lowest category; bridges in this category do not require retrofits or further seismic evaluation. Seismic retrofit category D is the highest category; bridges in this category requiring the most rigorous seismic evaluations and retrofits.

SCREENING RESULTS

The SRC for the bridge is "**C**" for lower level earthquake ground motion and "**B**" for upper level earthquake ground motion.

RETROFITS REQUIRED

No seismic retrofits are required for the bridge superstructure to substructure connection.

RECOMMENDATIONS FOR FURTHER SEISMIC EVALUATION

For the lower level earthquake ground motion, it is recommended that capacity/demand ratios for bridge components are calculated as per Section 5.4 of the referenced manual. For the upper level earthquake ground motion, it is recommended that the capacities of the bearings are checked as per Section 5.2 of the referenced manual.

Retrofit cost estimates will be provided after any further required seismic evaluations are completed.

PARSONS

100 Broadway
New York, NY 10005
Phone: 212-266-8300
Fax: 212-571-6825
www.parsons.com

TECHNICAL MEMORANDUM

FROM: Kian Siang Chau, P.E
NYSPE 082744

DATE: JANUARY 26, 2015

RE: FATIGUE EVALUATION
NEW YORK STATE DEPARTMENT OF TRANSPORTATION
D031085; PIN 3501.60; I-81

BIN: 1093530 (I-481 Southbound / I-481 Northbound to I-690 Westbound Ramp)

This memorandum documents a fatigue evaluation conducted for the existing Interstate 81 Viaduct Project. Existing structures with AASHTO Category D, E, and E' fatigue-prone details require 100% hands-on inspection unless proven to be exempt. The purpose of the evaluation is to assess the remaining life of fatigue-prone components.

EVALUATION PROCEDURES

The fatigue evaluation was performed in accordance with the AASHTO Guide Specification for Fatigue Evaluations of Existing Steel Bridges, 1990. Fatigue-prone welds identified in the biennial inspection reports were located on record drawings and confirmed visually in the field. Additional information concerning fatigue-prone welds located in BIN folders was also obtained and reviewed prior to inspection.

EVALUATION RESULTS

The results of the fatigue evaluation of the existing bridge are shown below. The remaining safe fatigue life of the fatigue components has been **exhausted.**

Fatigue Detail Location	Remaining Safe Fatigue Life (Years)	Remaining Mean Fatigue Life (Years)
Interior Girders, Gusset plate welds	3.94	139.13
Exterior Girders, Gusset plate welds	-16.74	37.39

BRIDGE DECK EVALUATION REPORT

RECOMMENDATIONS

The bridge deck inspection findings and evaluation are used as a tool for developing the scope of work and cost estimates for the development and comparison of alternatives for the overall project.

The total damaged area of the deck is 4% of the top and 2.8% of the underside of the deck area. The cores indicate the reinforcement steel is 4 inches below the surface of the deck. The lab test indicate that chloride ion concentrations at all the sample locations are significantly higher than the corrosion threshold for steel.

Due to the age, condition and high chloride ion content of the bridge deck concrete, the bridge deck should be rehabilitated or replaced to meet the current standards and to mitigate excessive future maintenance costs.

ALTERNATIVES

- Rehabilitation Alternative - 2 inches Bonded Concrete Overlay
  - Scope

    The scope of this alternative will include the complete removal of the bridge railings, curb and safety walks, and fascias to the level of the original top of the deck. The lower portion of the fascia or deck soffit is in better condition and only partial removal of damaged areas is necessary. The joint will be removed. The top 2 inches of the entire deck will be removed and areas of deteriorated concrete must be removed to at least 1 inch below the level of the reinforcement steel and to the horizontal and vertical limit of any detectable hollow areas. Damaged areas at the underside of the deck will require full depth reconstruction. Any corrosion of the reinforcement steel will be sandblasted or hydro-blasted. Reinforcement with significant section loss will be replaced. Partial and full depth removal areas will be reconstructed to adjacent grade. The proposed deck overlay will be a 2 inches thick bonded concrete overlay yielding a nominal 9.5 inches standard thickness deck. A new single-sloped concrete barrier and a new armorless joint will be installed. The Level 1 Load Rating for the final condition was found to be acceptable.

- Useful Life Expectancy

  The removal of the top 2 inches of the existing deck will remove the portion of the deck with the highest chloride ion concentrations. It can be anticipated that chloride ions will continue to migrate into the remaining deck to the reinforcing steel resulting in further corrosion-related deterioration of the deck surface. Concrete admixtures will be included in the bonded concrete overlay to impede the continued penetration of chloride into the deck from the surface. This alternative will result in an extended useful life expectancy estimated at 20 years.

The design life of the project is 30 years (ETC + 30). This alternative does not meet the project objectives of obtaining 30 years of service life and is not evaluated further.

- Rehabilitation Alternative – 100% Deep Removal and Partial Deck Reconstruction
  - Scope

    The scope of this alternative will include the complete removal of the bridge railings, curb and safety walks, and fascias to the level of the original top of the deck. The lower portion of the fascia or deck soffit is in better condition and only partial removal of damaged areas is necessary. The joint will be removed. The scope of this alternative will include partial depth reconstruction with removal of the concrete to at least 1 inch below the top mat of the reinforcement steel. Additionally, any further areas of deteriorated concrete detected will require full depth removal. Any corrosion of the reinforcement steel will be removed by sandblasting or hydro-blasting. The proposed deck partial reconstruction will be a nominal 6.25 inches thick concrete deck yielding a 9.5 inches standard thickness deck. A new single-sloped concrete barrier and a new armorless joint will be installed. The Level 1 Load Rating for the final condition was found to be acceptable.
  - Useful Life Expectancy

    This alternative will provide a useful life expectancy is estimated at 35 years.
  - Cost Estimate

    The estimated cost for this alternative is $663,000. The Engineer's Opinion of Probable Construction Cost worksheet is at the end of this section.

- Replacement Alternative – Cast-In-Place Concrete
  - Scope

    This scope of this alternative will include the complete demolition of the existing bridge deck, railings, curb and safety walks, fascias and bridge joint. The bridge deck will be replaced with a new 9.5 inches standard thickness concrete deck. A new single-sloped concrete barrier and a new armorless joint will be installed. The Level 1 Load Rating for the final condition was found to be acceptable.
  - Useful Life Expectancy

    This alternative will provide a useful life expectancy is estimated at 40+ years.
  - Cost Estimate

    The estimated cost for this alternative is $775,000. The Engineer's Opinion of Probable Construction Cost worksheet is at the end of this section.

- Replacement Alternative – Pre-cast Concrete Deck Panels
  - Scope

    The scope of this alternative is similar to the Cast-In-Place Concrete Deck Replacement Alternative except the deck structure will be precast panels. This alternative offers reduced construction time over conventional construction.
  - Useful Life Expectancy

    This alternative will provide a useful life expectancy is estimated at 40+ years.
  - Cost Estimate

    The comparison of accelerated construction to conventional construction is beyond the current scope of this evaluation.

IN-DEPTH INSPECTION REPORT

D031085 P.I.N. 3501.60

ELEMENT SPECIFIC BRIDGE WORK

B.I.N. 3/3 1093540

TEAM LEADER George H Stam, P.E. 056216
NYSPE LICENSE #

ASSISTANT TEAM LEADER Timothy Olmstead

FEATURE CARRIED I-690 EB to I-481 NB Ramp

FEATURE CROSSED I-481 NB to I-690 WB Ramp

DATE FIELD WORK BEGAN 1/21/14

DATE FIELD WORK COMPLETED 2/4/14

TABLE OF CONTENTS

- STRUCTURE IDENTIFICATION
- INTRODUCTION
- PROJECT LOCATION MAP
- IN DEPTH CONDITION DOCUMENTATION
- PLANS & SKETCHES
- IN DEPTH PHOTO DOCUMENTATION
- ASBESTOS SAMPLING SURVEY
- LATEST BIENNIAL INSPECTION REPORT

STRUCTURE IDENTIFICATION

a. Bridge Identification Number (BIN):	3/3 1093540
b. Reference Marker:	690I 3301 3016
c. Region:	NYSDOT Region 3
d. County:	Onondaga
e. Town:	Dewitt
f. Feature Carried:	I-690 EB to I-481 NB Ramp
g. Feature Crossed:	I-481 NB to I-690 WB Ramp
h. Orientation:	Northeast

INTRODUCTION

a. Bridge History

i. Year Built:	1972
ii. Bridge Type:	Single Span, Steel Multi-girder
iii. Span Length:	117 feet
iv. Out-to-Out Width:	33 feet
v. Skew Angle:	3°
vi. Structural Ratings and Rankings	
1. Federal Sufficiency:	91 (May 2013)
2. Condition Rating:	4.906 (May 2013)
3. General Recommendation:	5 (May 2013)
vii. Live Load Posting (HS25):	No
viii. National Highway System (NHS):	Yes
ix. Previous work Done:	1987 – Replace wearing surface (asphalt concrete overlay) with concrete overlay 1992 – Clean and paint metal surfaces 2001 – Asbestos testing 2003 – Asbestos testing 2003 – Joint repairs 2008 – Clean and repair joints
x. Planned Future Work:	N/A

b. Highway Classification

i. Functional Classification: Urban Principle Arterial - Interstate

ii. Traffic Volumes

YEAR	AADT
2014	13749
2034	20430
2054	30359

PROJECT LOCATION MAP

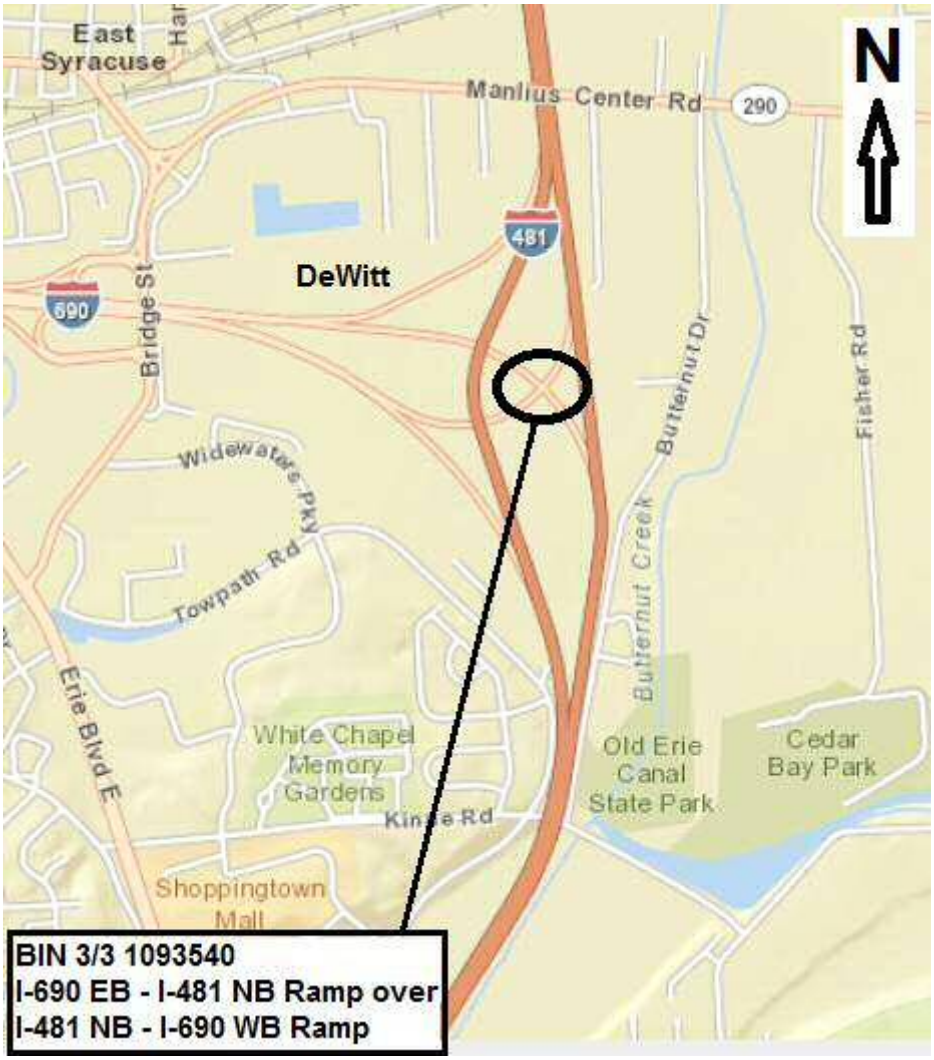

IN-DEPTH CONDITION DOCUMENTATION

NYS DEPT. OF TRANSPORTATION **SHEET: 1 OF 4**
BRIDGE INSPECTION REPORT **BIN: 1093540** **DATE: 1/21/2014 & 2/4/2014**

FEATURE CARRIED: I-690 EB to I-481 NB RAMP **TEAM LEADER: G. STAM**
FEATURE CROSSED: I-481 NB to I-690 WB RAMP **ASSIST. TEAM LEADER: T. OLMSTEAD**

ITEM	REMARKS	PHOTO NO.
	BEGIN ABUTMENT ITEMS	
TP 349-22	Begin Abutment - Joint with Deck: The begin bearings are expansion. There are concrete headers and there is no steel armor visible from the surface. The joint material is a filled elastic material (Photo 1). The concrete headers are in poor condition. Both headers are cracked at one foot to 3 foot intervals and spalled at numerous locations. The begin header on the left side and both headers on the right side are the worst with spalling up to 5 feet long x up to full width of the header x up to 2 inches deep (Photos 1). The seal material is in poor condition. The seal has pulled away from both sides at numerous locations and there are +/- ¼ inch gaps along the seal (Photo 2). There is leakage and seepage down the left side of the backwall (Photo 3).	1,2,3
TP 349-24	Begin Abutment – Bearings: The begin bearings are expansion. The fascia bearings are heavily corroded (Photo 4). The interior bearings are in better condition. Bearings B1 and B2 are at a normal contracted position at 30 ºF. Bearings at B3 thru B5 are fully contracted. The worst is bearing B4 with the front edge of the sliding plate overhanging the masonry plate by ¼ inch (Photo 5).	4,5
TP 349-26	Begin Abutment - Seat and Pedestals: The seat in good condition with no hollow areas or significant cracks detected. Pedestal P1 is tight mapcracked on the left side (Photo 4). Pedestal P2 is cracked at the left and right sides; and the front left side has 1 square foot area of hollow sounding concrete (Photo 6). The remaining pedestals are in good condition with no significant cracks or hollow areas detected.	4,6
TP 349-28	Begin Abutment – Backwall: There is tight mapcracking with light efflorescence throughout the backwall (Photo 7). At the top of the left fascia bay, there is a 15 inches wide x 1 foot high x 10 inches deep spall and cracked segmented concrete with exposed debonded reinforcement (Photo 3). There is crumbly concrete surrounding the spall with seepage and heavy efflorescence down the backwall. See the Begin Abutment Deterioration Sketch.	3,7
TP 349-30	Begin Abutment – Stem: The stem has tight mapcracking throughout. The left side is hairline cracked in a previously patched area (Photo 8). There are scattered hairline cracks as illustrated on Begin Abutment Deterioration Sketch.	8
	END ABUTMENT ITEMS	
TP 349-23	End Abutment - Joint with Deck: The end bearings are fixed. There is no joint visible from above. The concrete pavement transition header at the end of the deck is deteriorated with cracks at 2 to 3 foot intervals and the right side is spalled 5 feet wide x 2 inches deep and (Photo 9).	9

ITEM	REMARKS	PHOTO NO.
TP 349-25	End Abutment – Bearings: The end bearings are fixed. All of the bearings have cracked and peeling paint with heavy corrosion and pack rust between the rockers and the masonry plates that restricts movement (Photo 10). The worst is the left fascia bearing B1 where there is seepage down the backwall onto the bearing (Photo 11).	10,11
TP 349-27	End Abutment - Seats and Pedestals: The seat is in good condition with no hollow areas or significant cracks detected. Pedestal P1 is mapcracked on the left side and there is a crack toward the back of the left side that wraps along the top with shallow spalls along the crack (Photo 12). The right side of pedestal P1 is mapcracked (Photo 13). Pedestal P5 is cracked at the top right and along the right side (Photo 14). There are scattered cracks on the remainder of the pedestals as illustrated on the End Abutment Deterioration Sketch.	12,13,14
TP 349-29	End Abutment – Backwall: There is tight mapcracking with light efflorescence throughout the backwall. The worst is at the left where there is seepage down the backwall (Photo 15). At the top of the left fascia bay, there is an 18 inches wide x 1 foot high x 6 inches deep spall with exposed debonded reinforcement (Photo 16). There is crumbly concrete surrounding the spall with seepage and heavy efflorescence down the backwall. At the right fascia bay, the top is cracked with 3 inches diameter shallow spalls along the cracks (Photo 17). The surface is damp with efflorescence. There are scattered cracks on the remainder of the backwall as illustrated on the End Abutment Deterioration Sketch.	15,16,17
TP 349-31	End Abutment – Stem: Toward the left side there is leakage stains and mapcracked with efflorescence (Photo 18). No hollow areas or significant cracks were detected. There are scattered hairline cracks as illustrated on End Abutment Deterioration Sketch.	18
	APPROACH ITEMS	
TP 349-53	Approach - Drainage: The bridge is superelavated from left to right and has a negative slope from begin to end. The pavement has settled slightly along the begin left approach curbline at the bridge trapping runoff at the begin left transition header and causing shallow ponding along the curbline (Photo 19). Additionally, the end left approach pavement at the curbline is +/- 0.5 inch higher than the end side joint header and runoff is trapped and causes shallow ponding and buildup of dirt along the end left curbline (Photo 20).	19,20
TP 349-55	Approach - Settlement: The begin approach has 0.5 inch of settlement (Photo 21). At the end approach, there is no significant settlement, however, the deteriorated concrete transition header causes a bump with poor ride quality (Photo 9).	9,21
TP 349-57	Approach - Pavement: At both approaches, the asphalt pavement adjacent to the bridge is transverse cracked and raveled with up to 2 inches wide x up to 1.5 inches deep potholes along the concrete headers (Photos 1 & 21).	1,21

ITEM	REMARKS	PHOTO NO.
	DECK ITEMS	
TP 350-19	Deck - Wearing Surface: The ride quality of the deck is smooth (Photo 22).	22
TP 350-20	Deck - Curbs: The granite curbs are in good condition. The right curb has 9 inches average curb reveal. The average left curb reveal is 8.5 inches.	
TP 350-21	Deck - Sidewalks and Fascias: Sidewalks – The safety walks have light mapcracking on approximately 50% of the top surface (Photo 23). No hollow sounding areas were detected.	23
	Fascias – Both fascias have tight mapcracking of the surface over 10% of the surface, primarily beneath the railing posts (Photo 24). Also, there are scattered vertical cracks (Photo 25). There is horizontal cracking just below the upper portion of the fascia over 50% of the span length. Most of this crack is tight with some efflorescence, however, a +/- 10 foot long section near mid-span is spalled along the crack up to 1 inch high x 1 inch deep with staining (Photo 26).	24,25,26
TP 350-22	Deck - Railings: The railings are in good condition with only minor rust speckling of the galvanized surface (Photo 27). The 2nd railing post on the left side has the begin inside bolt missing (Photo 28). The last railing post on the left side has impact damage and is bent 4 inches toward the end from vertical at the base (Photo 29). The post and railings are still attached, firm and in alignment. There is chain link snow fence attached to the left and right side railings above the I481 NB ramp to I690 WB in good condition.	27,28,29
	SUPERSTRUCTURE ITEMS	
TP 350-27	Structural Deck: Record plans indicate the initial structural deck is 8 inches thick concrete mono-deck. SIP forms were not used. Records indicate the deck was repaired, the surface was scarified and it received a 1.75 inch concrete overlay in 1987.	
	Top of Deck - There is widespread cracking and scattered random hollow areas (Photos 30 & 31) as illustrated in the Top of Deck Deterioration Sketch. Several of the cracks have been sealed with an epoxy crack sealer (Photo 32). The total hollow area is less than 1% of the surface.	30,31,32
	Underdeck – The underside of the deck is hairline mapcracked throughout (Photo 33). There are scattered cracks, some with efflorescence, delaminations, hollow areas, and damp areas. The total damaged area is 1.9% of the surface. The deteriorated areas are illustrated on the Under Deck Deterioration Sketch; and significant areas noted below:	33
	• Bay 1 near end – cracked and 20 square foot area of hollow and delaminated concrete with 2 – 12 inches wide x 6 inches long x 1 inch deep spalls (Photo 34).	34
	• Bay 2 in diaphragm bay 5 – patched area in good condition with adjacent 2 square foot area of cracked and hollow sounding concrete (Photo 35).	35
	• Bay 3 near diaphragm 3 - transverse crack with 3 square foot area of hollow sounding concrete.	

ITEM	REMARKS	PHOTO NO.
	• Bay 4 near begin - 4 square foot area of mapcracking and hollow sounding concrete (Photo 36).	36
	• Bay 4 diaphragm bay 2 – 28 square foot area of patch in good condition (Photo 37).	37
	• Bay 4 near end – 16 square foot area of mapcracking and hollow sounding concrete with efflorescence.	
TP 350-28	Primary Members: The primary members are in good condition with only surface rusting where the paint has blistered or peeled (Photo 38). No significant section loss was noted.	38
TP 350-29	Secondary Members: The secondary members (diaphragms) are in good condition with only surface rusting where the paint has blistered or peeled. No significant section loss was noted.	
TP 350-30	Paint: The paint system is failed on approximately 10% of the surfaces of the girders and diaphragms. There is widespread cracking and peeling of the paint on the bottom flanges, most severely over the travel lanes (Photo 38). The lower half of the outside web of the right fascia girder G5 has scattered blistering and peeling paint over 5% of the surface (Photo 39). The inside web of the right fascia girder has widespread cracked, peeling or blistered paint over approximately 10% of the surface (Photo 40). There is surface rusting where the paint has peeled or blistered. The remaining paint is faded but not yet chalky.	38,39,40
	UTILITIES ITEMS	
TP 350-43	Lighting: None.	
TP 350-44	Sign Structure: None.	
TP 350-45	Utilities and Support: None visible.	
	SPECIAL EMPHASIS ITEMS Special Emphasis Inspection Required · Non-Redundant/Fracture Critical Members – No · Pin and Hangers – No · Fatigue-Prone Welds – Yes · Non-Categorized Fatigue-Prone Details – No · Other – No Special Emphasis Details · Diaphragm gusset plate welded connections to bottom flanges of all girders.	

PLANS & SKETCHES

BIN 1093540

F.I.S.H. 70-7

FED. RD. REG. NO.	STATE	FEDERAL PROJECT	AID NO.	SHEET NO.
1	NEW YORK	I-690-3(28) I-481-2(116)		152

INTERSTATE ROUTE CONNECTION 570
BUTTERNUT INTERCHANGE (PHASE 2)
ONONDAGA COUNTY

1999
CURB REVEAL SHT 156
TEAM LEADER B Opalka
FIELD VERIFIED ✓
DATE 11/87
P.J.R. 1989
P.J.R. 10/91
Opalka 12/9/93
11/20/95
09/17/97
09/08/03
7/1/01
09/2

ESTIMATE OF QUANTITIES

ITEM	DESCRIPTION	UNIT	QUANTITIES NEAT	QUANTITIES PROP'L
IWPS	Watering Plants and Sod	M.Gal.	1.7	4.0
2UF	Underdrain Filter	C.Y.	11	15
5B	Structure Excavation	C.Y.	1652	1655
11H-G	Perf. Corr. Metal Pipe Underdr. - 6"dia - 18ga.	L.F.	205	205
18	Class A - Concrete for Structures	C.Y.	14	15
18MA	Cl. A - Conc. for Struct (Mono. Br. Slab)	S.F.	3957	3960
20	Class B - Concrete for Structures	C.Y.	579	580
24A	Bagged Screened Aggregate	C.Y.	92	95
28	Bar Reinforcement for Structure	Lb.	55459	55460
28B	Stud Shear Connectors	Ea.	1410	1410
29	Structural Steel	Lb.	204580	204580
375(2)	Steel Bridge Railing (2 Rail)	L.F.	382	385
GI	Bituminous Material	Gal.	141	145
79B	Concrete Block Paving	S.Y.	226	230
83TAS	Temporary Sheet Piling	S.F.	5900	5900
945BV	Stone Curb (Bridge Types - Granite)	L.F.	544	545
124	Sodding	S.Y.	82	85
363F	Epoxy Protective Coating for Conc.	S.F.	1330	1330

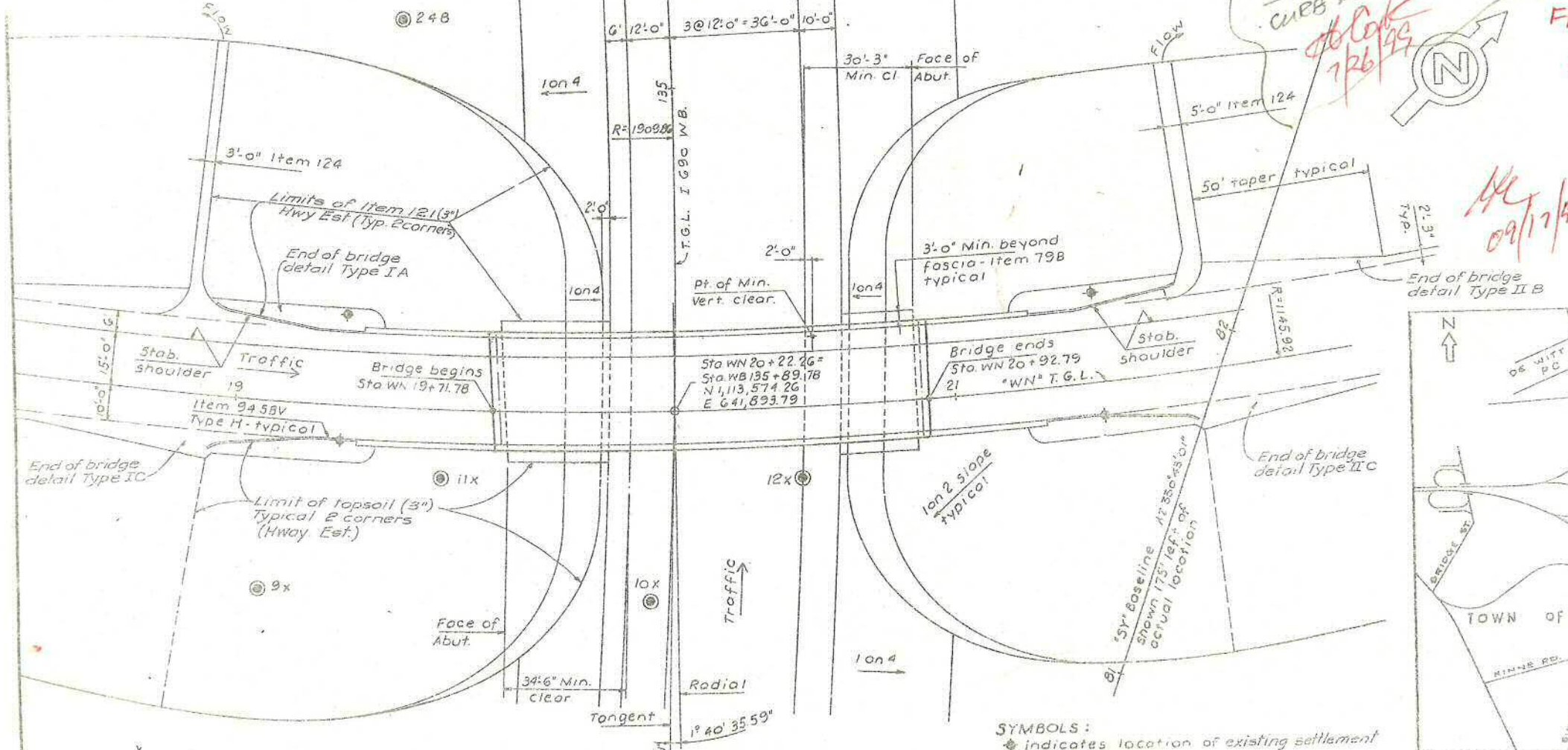

PLAN
Scale 1" = 20'

SYMBOLS:
- indicates location of existing settlement Platforms Sta. WN 19+30± 10' Rt., 25' Lt. Sta. WN 20+40± 10' Rt., 25' Lt.
- indicates location of Borings

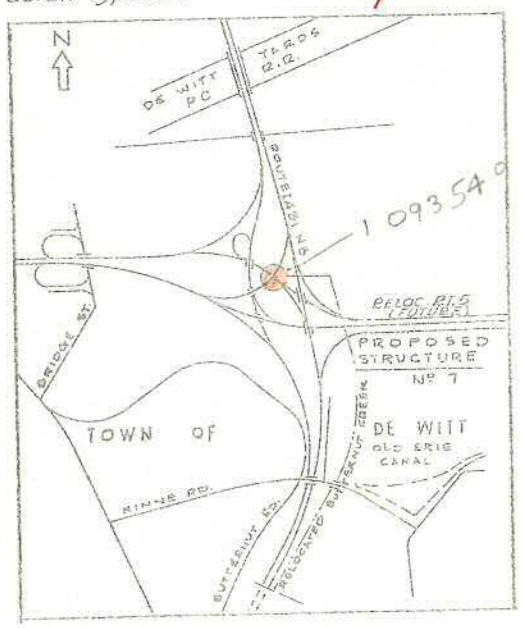

LOCATION PLAN
Scale 1" = 4,000

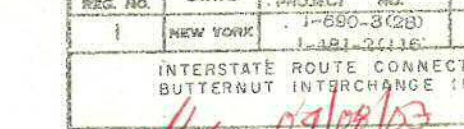

BRIDGE SECTION
Scale 1" = 10'

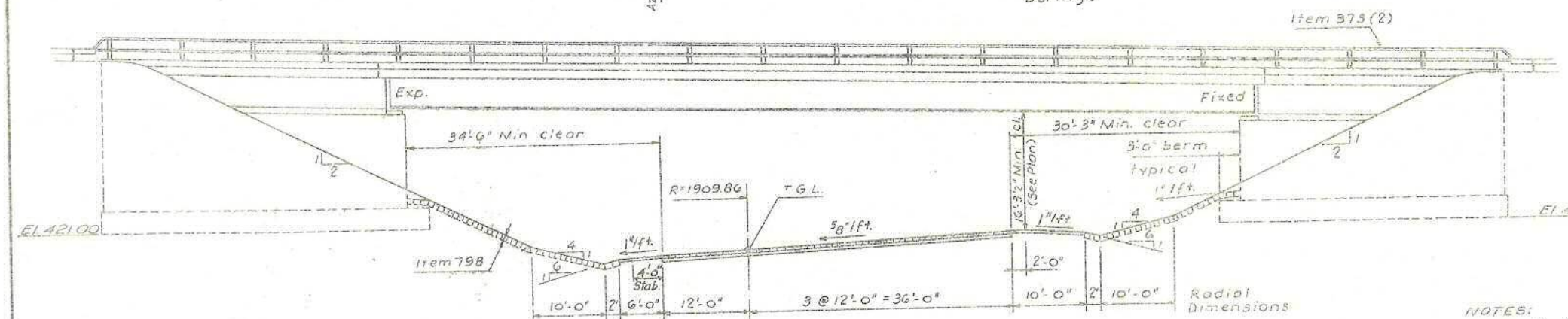

ELEVATION
Scale 1" = 10'

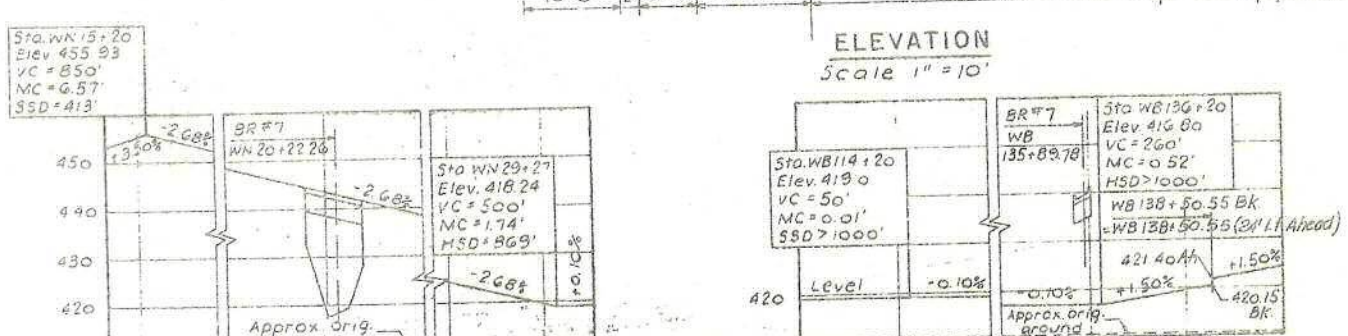

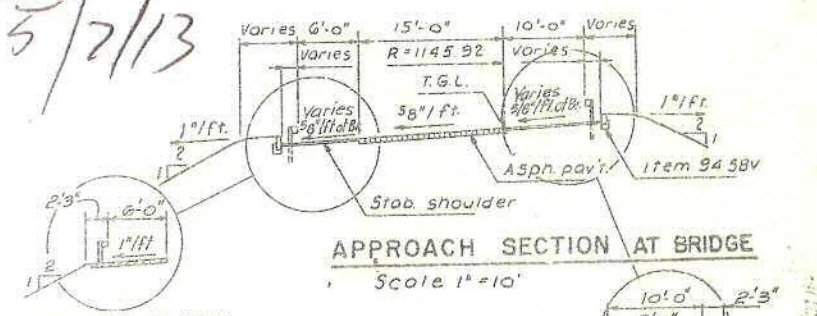

NOTES:
1. For General Notes see Sheet No. 124
2. For design purposes the foundation pressure does not exceed 2½ tons/s.f. Three (3) months waiting period required after completion of backfilling behind abutments and prior to setting final pedestal elevations. Duration of required waiting period may be reduced by the Deputy Chief Engineer (Design) based upon analysis of settlement platform readings. Readings at one (1) week intervals, taken at the settlement platforms in the vicinity of the abutments will be required after the completion of backfill operation.
3. For Curve Data see Alignment plan, Sh. No. 40
4. The structural slab on this structure shall be formed with removable forms.
5. For end of bridge details, see sheet No. 127

BIN 1093540

BUTTERNUT INTERCHANGE
F.A.I. 690 & F.A.I. 481
BRIDGE No. 7
"WN" LINE over ROUTE I 690 W.B.
GENERAL PLAN

DRAWING NO.	SCALE	DATE
7504-02	As Shown	8/15/70

B. Lowry

F.I.S.H. 70-7

FED. RD. REG. NO.	STATE	FEDERAL PROJECT NO.	SHEET NO.
1	NEW YORK	I-481-2(116)	153

INTERSTATE ROUTE CONNECTION 370
BUTTERNUT INTERCHANGE (PHASE 2)

ONONDAGA COUNTY

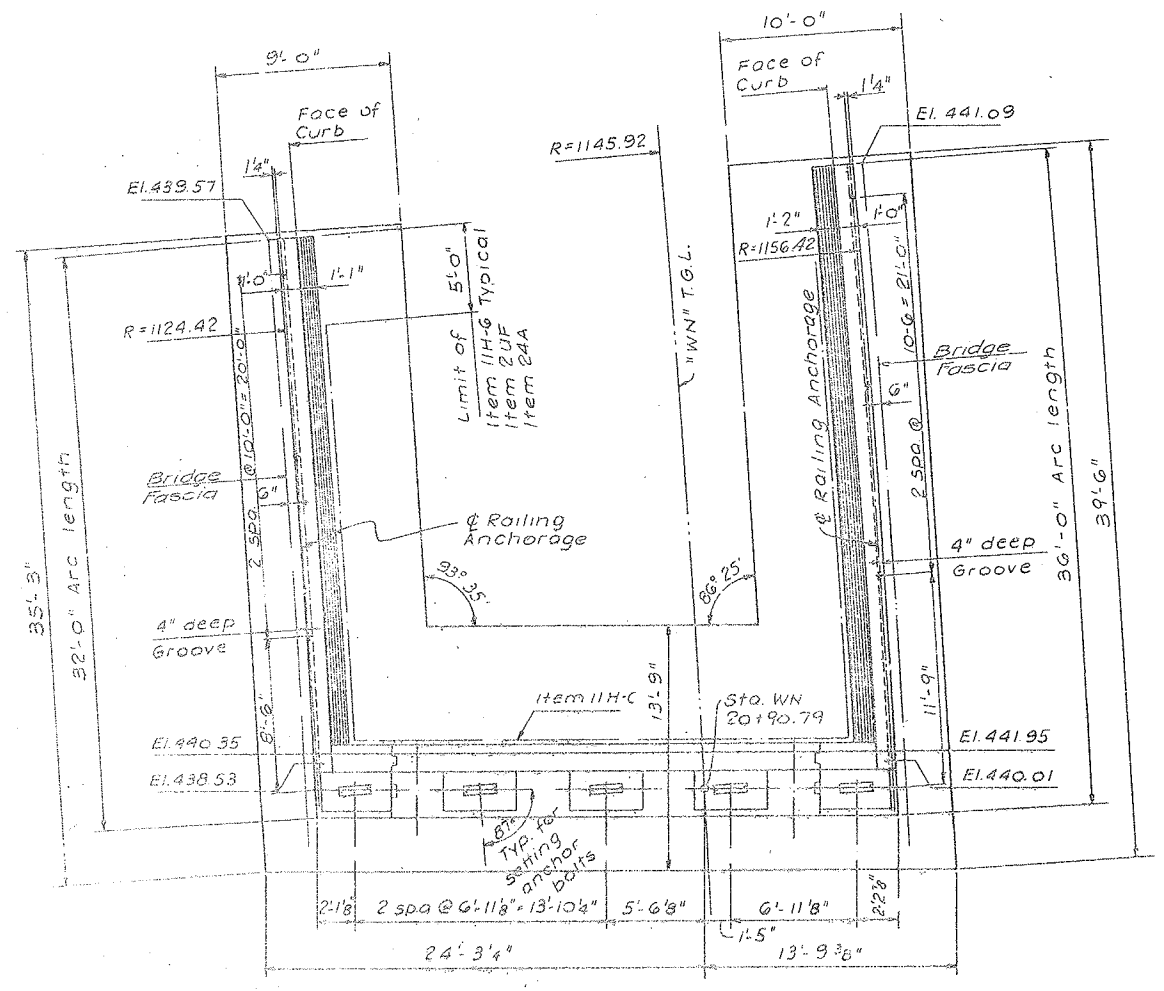

PLAN
Scale 3/16" = 1'-0"

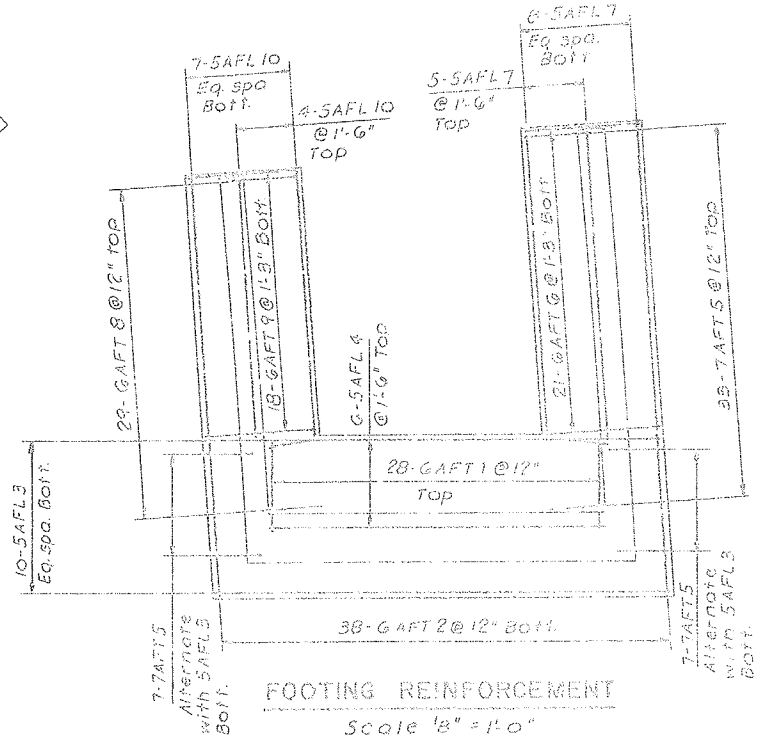

FOOTING REINFORCEMENT
Scale 1/8" = 1'-0"

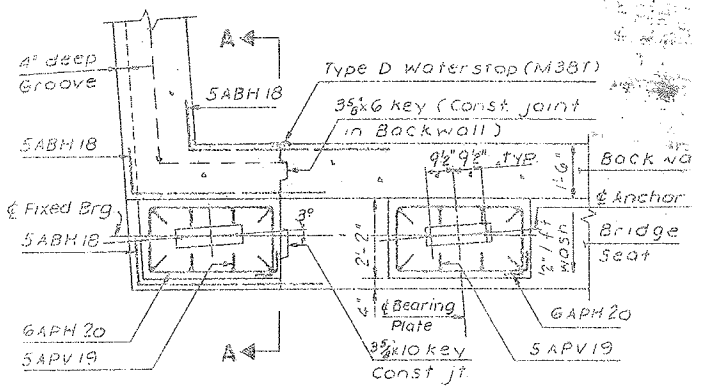

FASCIA INTERIOR

PLAN - PEDESTALS
Scale 3/8" = 1'-0"

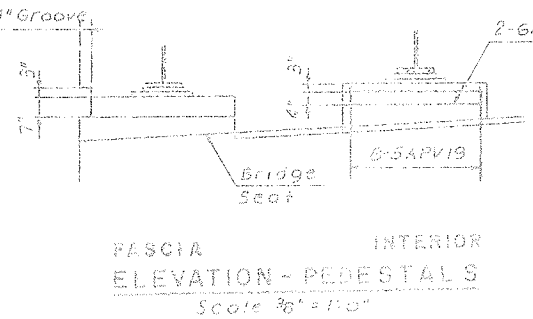

FASCIA INTERIOR
ELEVATION - PEDESTALS
Scale 3/8" = 1'-0"

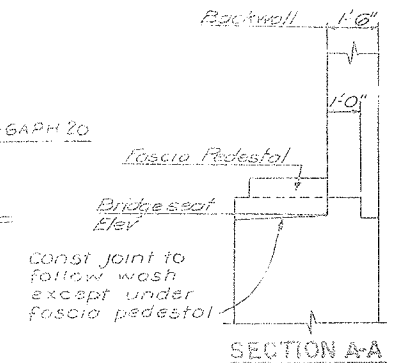

SECTION A-A
Scale 3/8" = 1'-0"

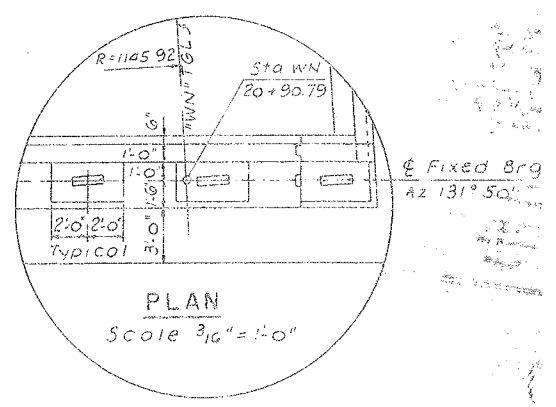

PLAN
Scale 3/16" = 1'-0"

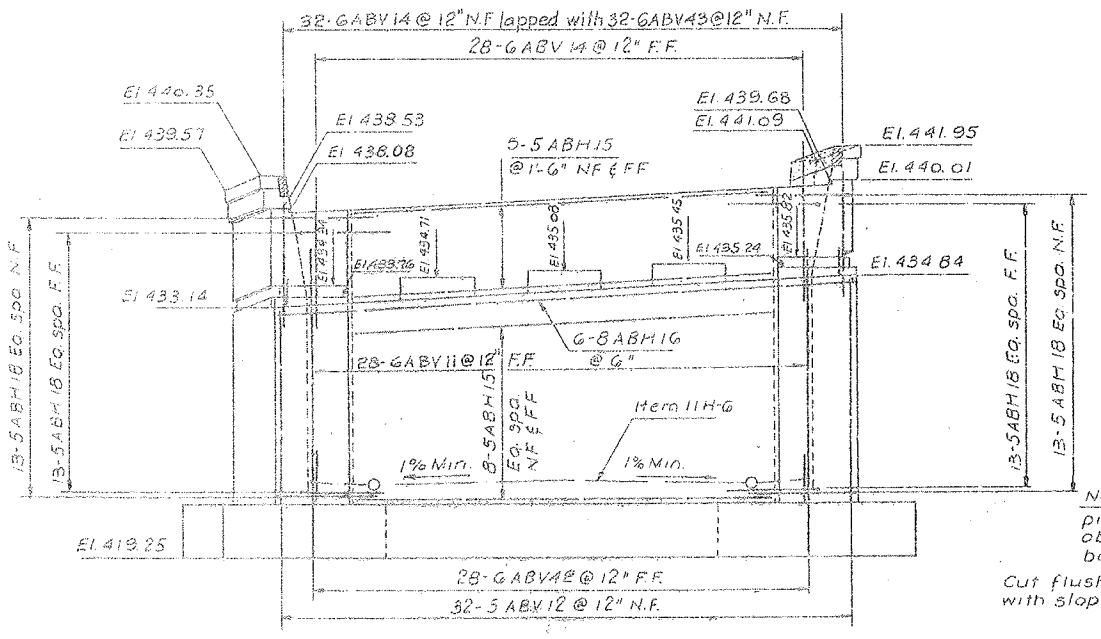

ELEVATION
Scale 3/16" = 1'-0"

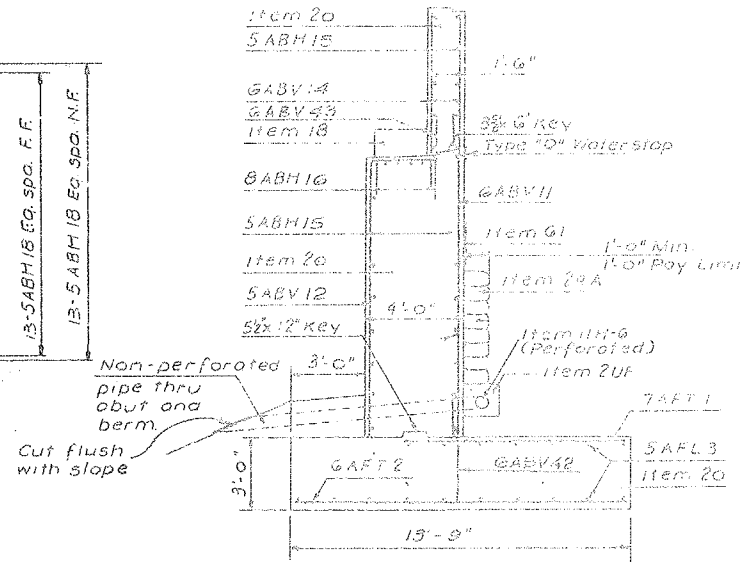

TYPICAL SECTION
Scale 1/4" = 1'-0"

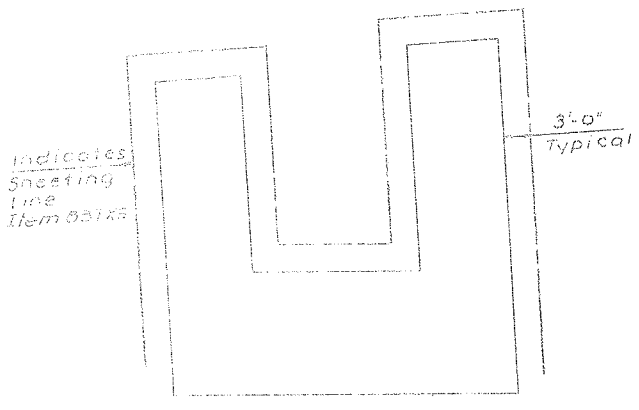

PLAN - ITEM 83 TXS
Scale 3/32" = 1'-0"

NOTES
1. Anchor bolts for Bearings shall be 1¼" roughened or swedged bolts, 1'-9" long and set 12" into concrete
2. For Backfill and Excavation details see Sheet No. 128
3. For Backwall and waterstop details see Sheet No. 125
4. For Fixed Bearing details see Sheet No.
5. For Rail Post spacing see Sheet No. 156

BUTTERNUT INTERCHANGE
F.A.I. 690 & F.A.I. 481

BRIDGE No. 7
"WN" LINE over ROUTE 1690 W.B.
EAST ABUTMENT

DRAWING NO.	SCALE	DATE	SHEET
7504-02	As Shown	8/5/70	15

LOCKWOOD, KESSLER & BARTLETT, IN
CONSULTING ENGINEERS — SYOSSET, NEW YO

F.I.S.H. 70-7

FED. RD. REG. NO.	STATE	FEDERAL PROJECT NO.	SHEET NO.	TOTAL SHEETS
1	NEW YORK	I-690-3(28) I-481-2(116)	154	3[illegible]

INTERSTATE ROUTE CONNECTION 570
BUTTERNUT INTERCHANGE (PHASE 2)

ONONDAGA COUNTY

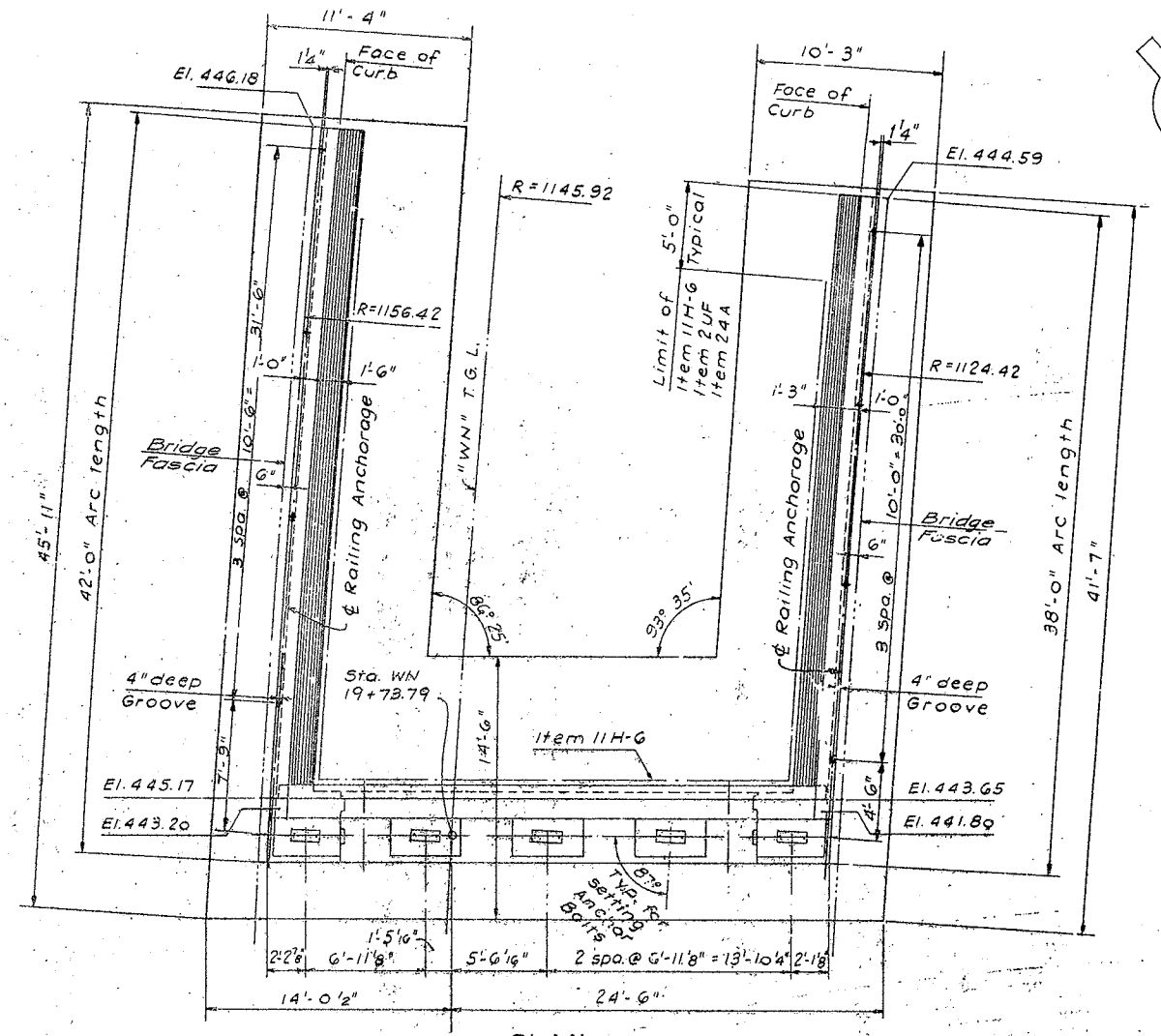

PLAN

Scale 3/16" = 1'-0"

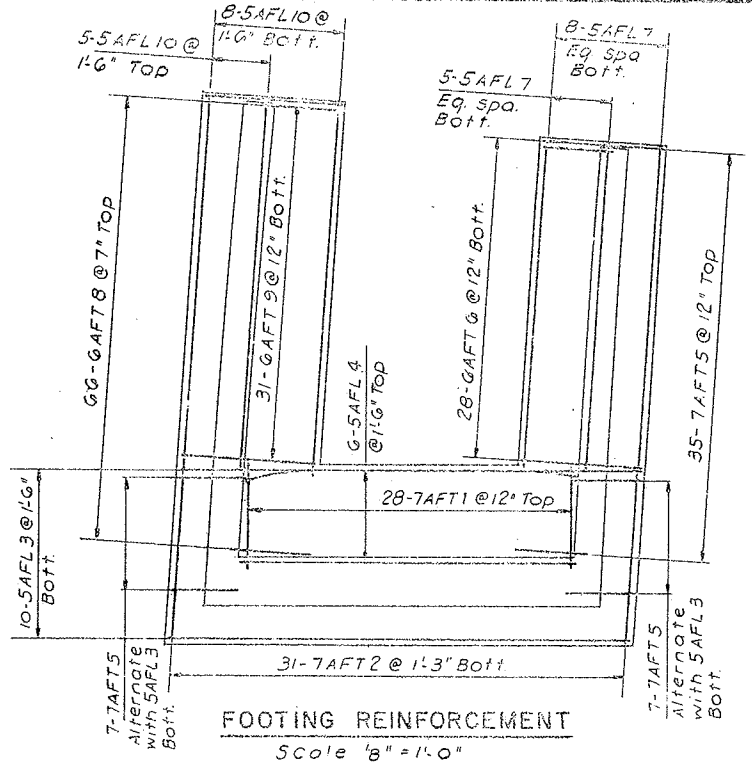

FOOTING REINFORCEMENT

Scale 1/8" = 1'-0"

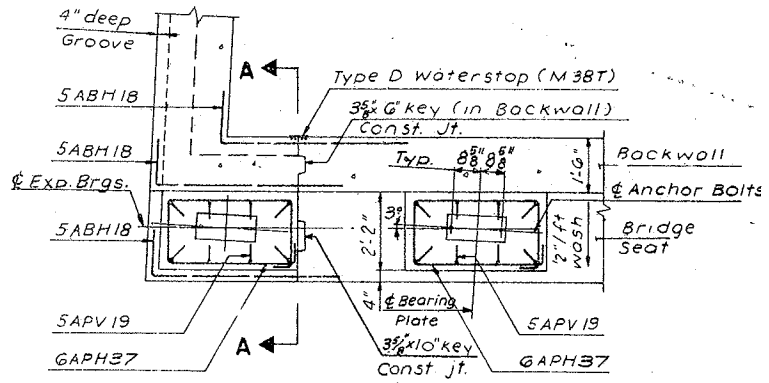

PLAN - PEDESTALS

Scale 3/8" = 1'-0"

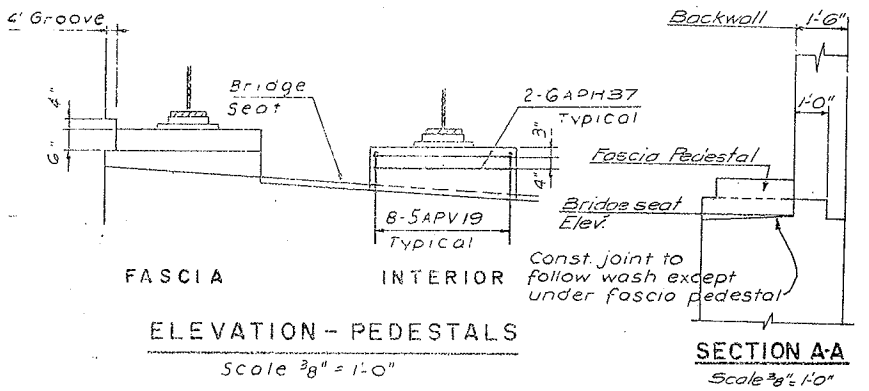

ELEVATION - PEDESTALS

Scale 3/8" = 1'-0"

SECTION A-A

Scale 3/8" = 1'-0"

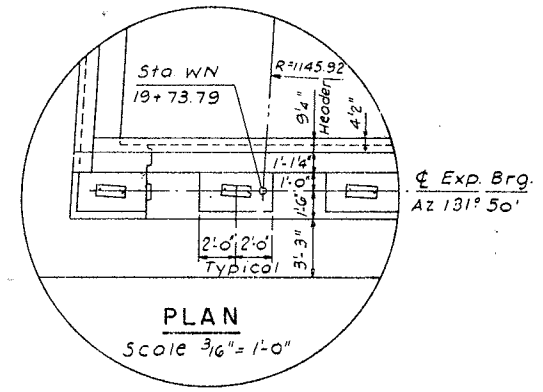

PLAN

Scale 3/16" = 1'-0"

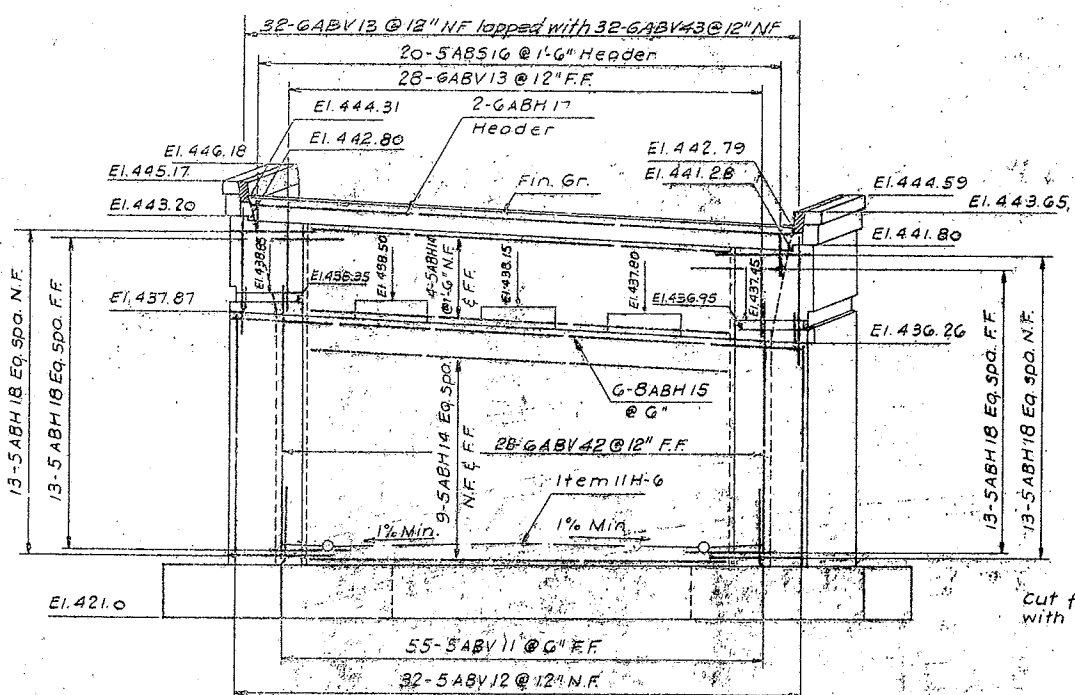

ELEVATION

Scale 3/16" = 1'-0"

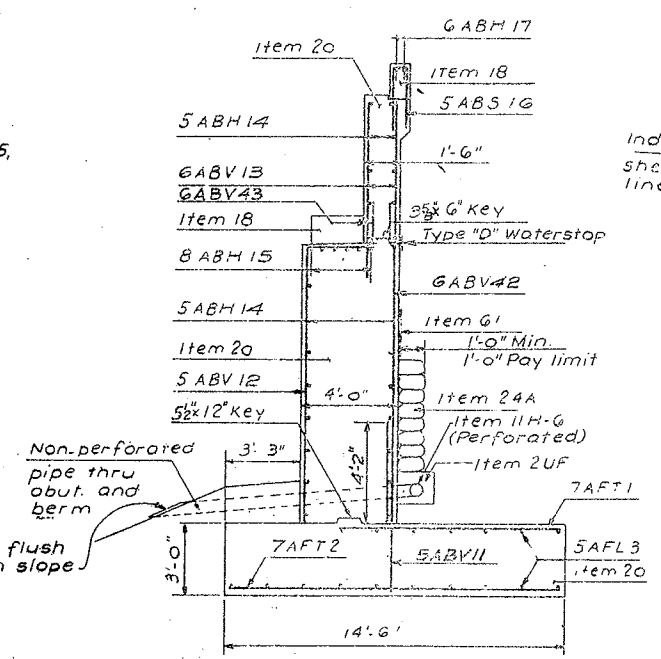

TYPICAL SECTION

Scale 1/4" = 1'-0"

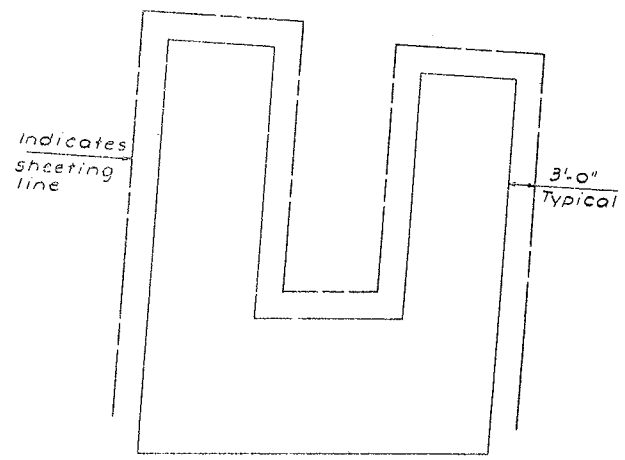

PLAN - ITEM 83 TXS

Scale 3/32" = 1'-0"

NOTES

1. Anchor bolts for bearings shall be 1¼" ϕ roughened or swedged bolts, 1'-4½" long and set 12" into concrete.
2. For Excavation and Backfill details see Sheet No. 128
3. For Backwall and waterstop details see Sheet No. 125
4. For Expansion Bearing detail see Sht. No. 130
5. For Rail Post spacing see Sheet No. 156

BUTTERNUT INTERCHANGE
F.A.I. 690 & F.A.I. 481

BRIDGE No. 7
"WN" LINE over ROUTE I 690 W.B.
WEST ABUTMENT

DRAWING NO.	SCALE	DATE	SHEET NO.
7504-02	As Shown	8/5/70	154

LOCKWOOD, KESSLER & BARTLETT, INC.
CONSULTING ENGINEERS — SYOSSET, NEW YORK

F.I.S.H. 70-7

FED. RD. REG. NO.	STATE	FEDERAL AID PROJECT NO.	SHEET NO.	TOTAL SHEETS
1	NEW YORK	I-690-3(28) I-481-2(116)	155	314 305

INTERSTATE ROUTE CONNECTION 570
BUTTERNUT INTERCHANGE (PHASE 2)

ONONDAGA COUNTY

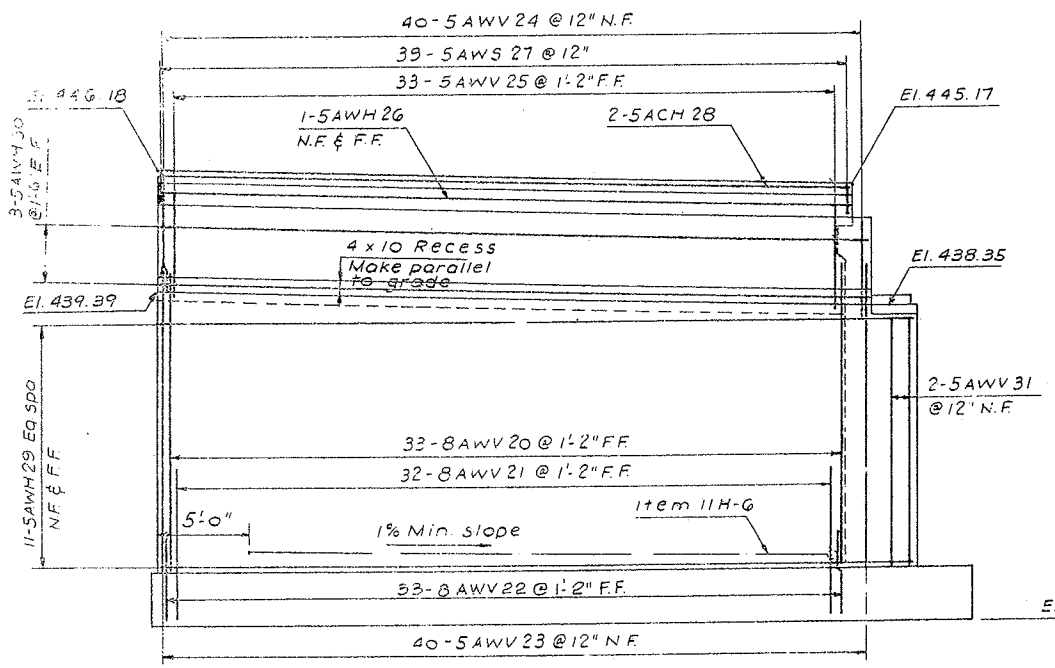

SW WINGWALL

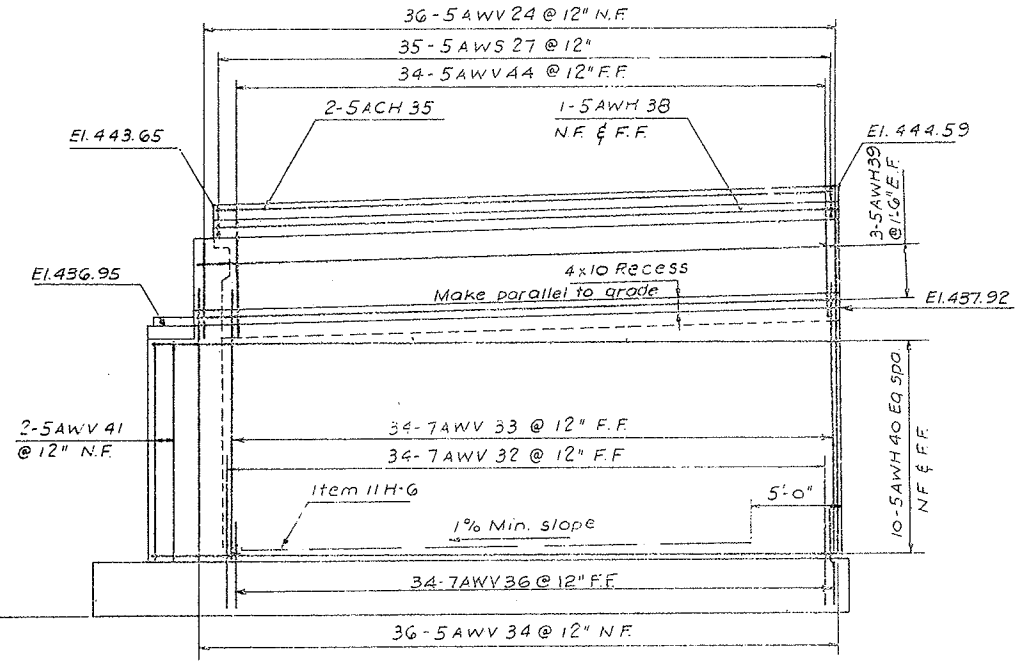

NW WINGWALL

WEST ABUTMENT
Scale 3/16" = 1'-0"

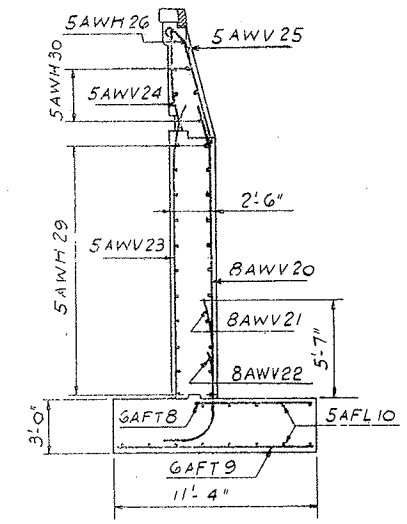

SW W.W.

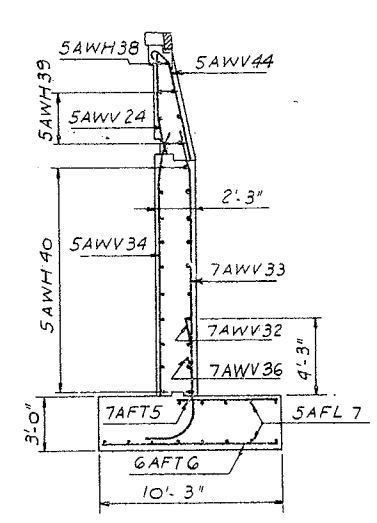

NW W.W.

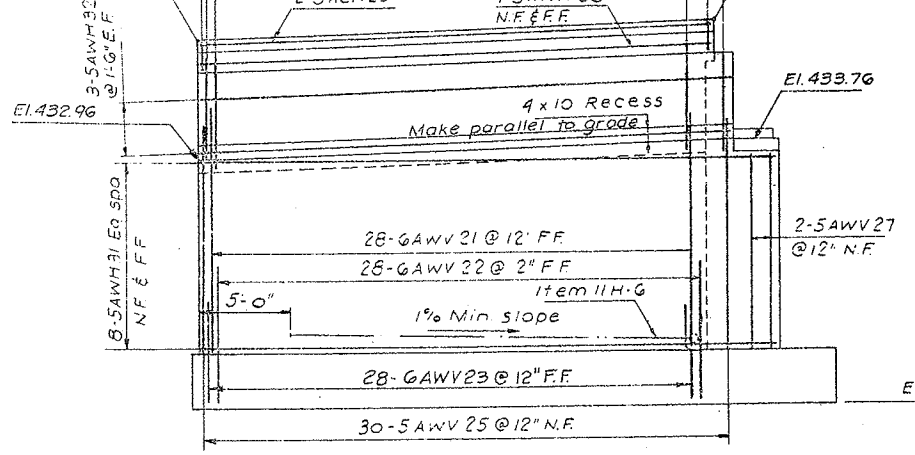

NE WINGWALL

EAST ABUTMENT
Scale 3/16" = 1'-0"

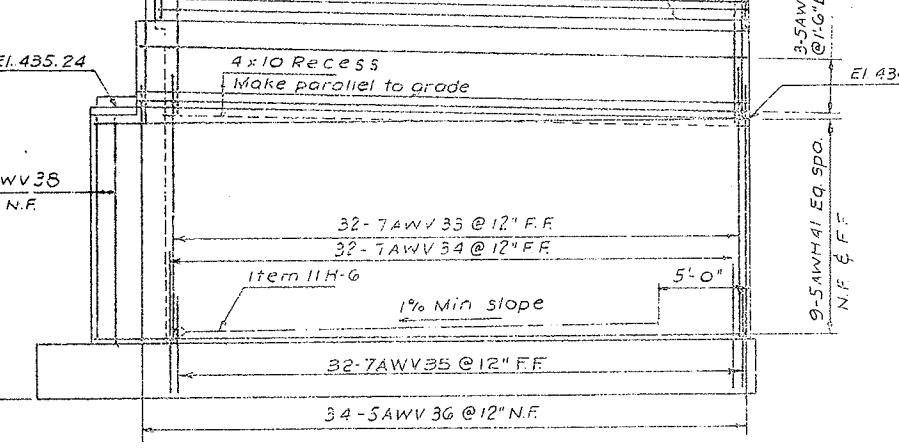

SE WINGWALL

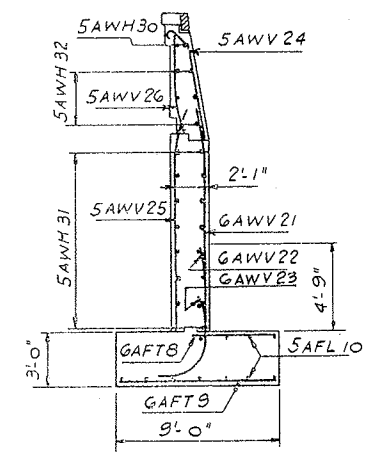

NE W.W.

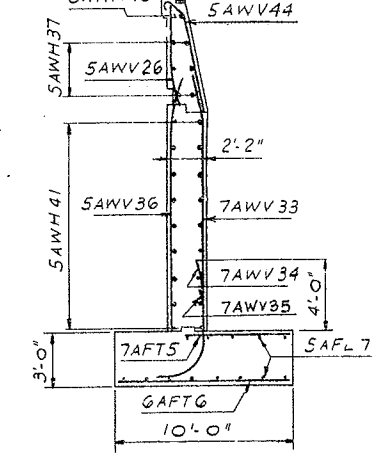

SE W.W.

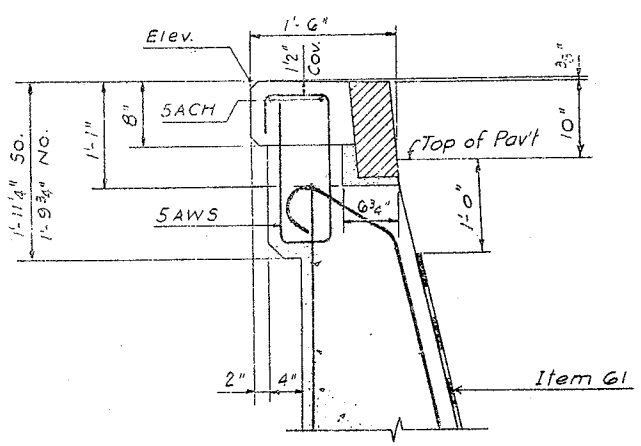

DETAIL

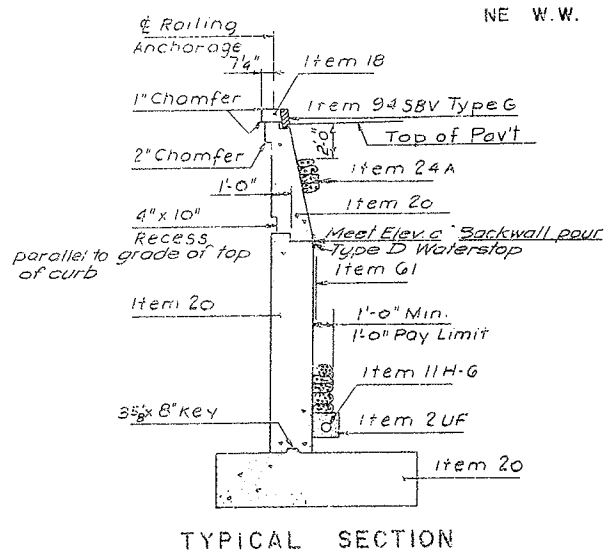

TYPICAL SECTION
Scale 3/16" = 1'-0"

SECTIONS
Scale 3/16" = 1'-0"

BUTTERNUT INTERCHANGE
F.A.I. 690 & F.A.I. 481

BRIDGE No. 7
"WN" LINE over ROUTE I690 W.B.
WINGWALLS

DRAWING NO.	SCALE	DATE	SHEET NO.
7504-02	As Shown	6/15/70	155

LOCKWOOD, KESSLER & BARTLETT, INC.
CONSULTING ENGINEERS — SYOSSET, NEW YORK

F.I.S.H. 10-7

FED. RD. REPR. NO.	STATE	FEDERAL PROJECT NO.	SHEET NO.
1	NEW YORK	I-690-3(28) I-481-2(118)	156

INTERSTATE ROUTE CONNECTION 570
BUTTERNUT INTERCHANGE (PHASE 2)

ONONDAGA COUNTY

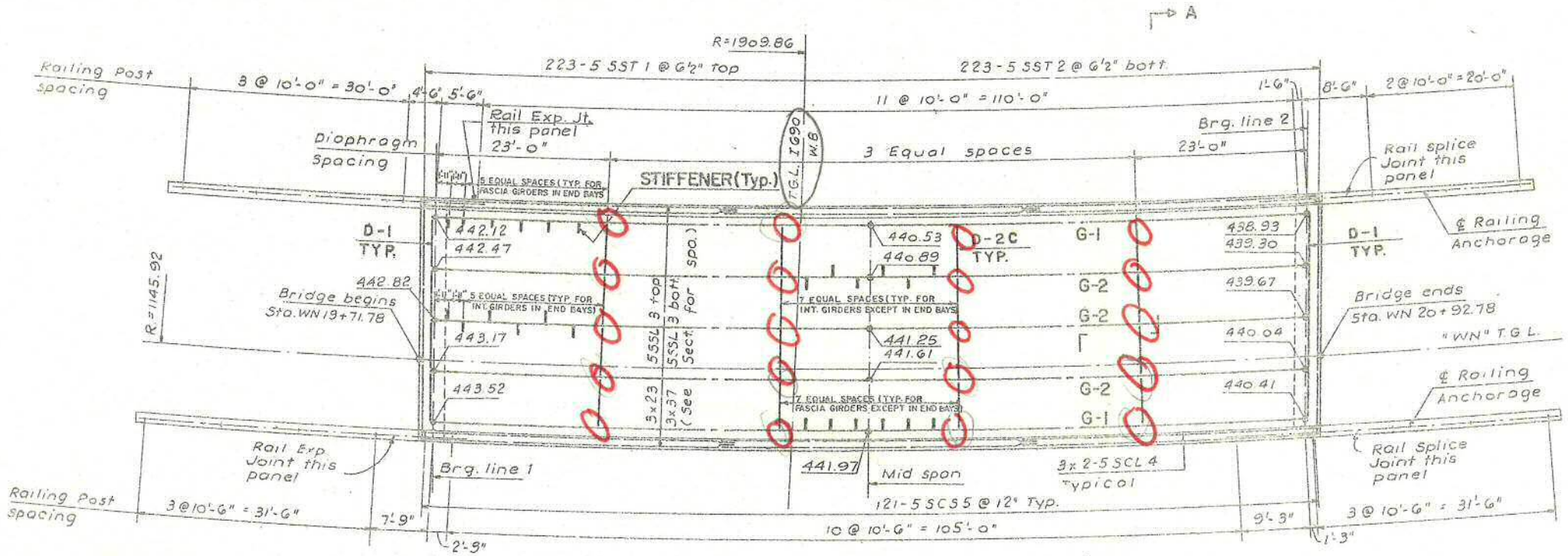

PLAN
Scale 1" = 10'



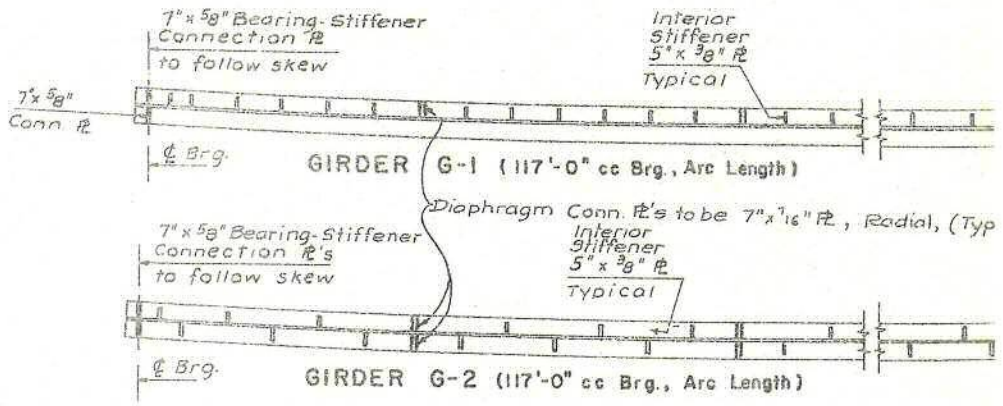

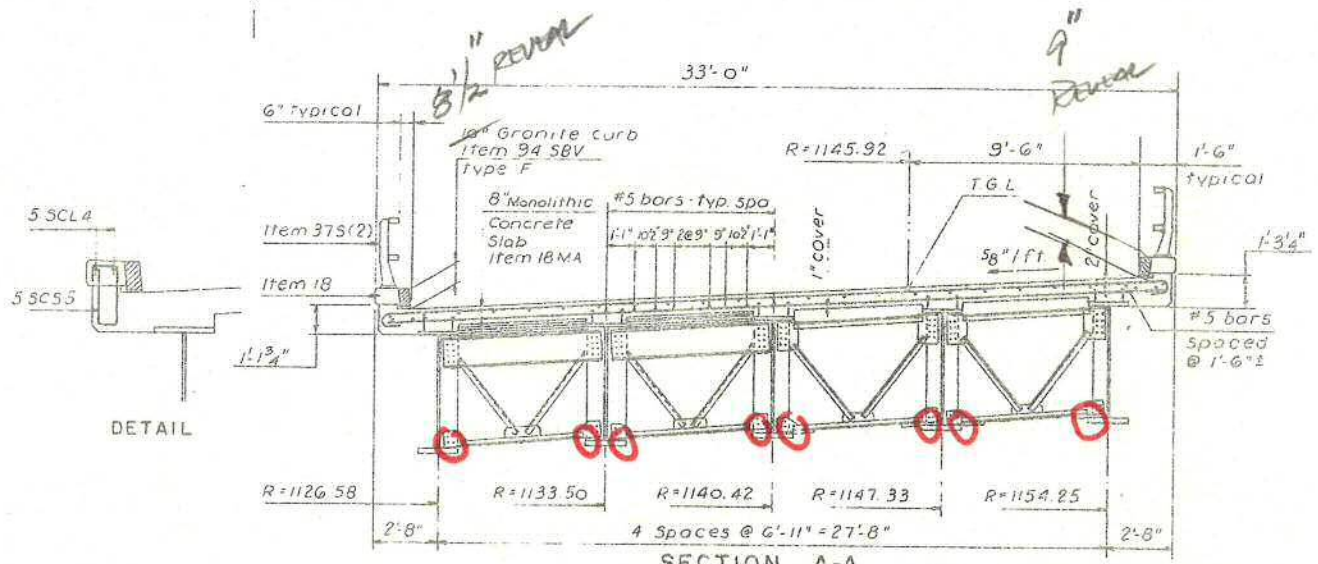

SECTION A-A
Scale ½" = 1'-0

Note: For diaphragm details see sheet No. 129

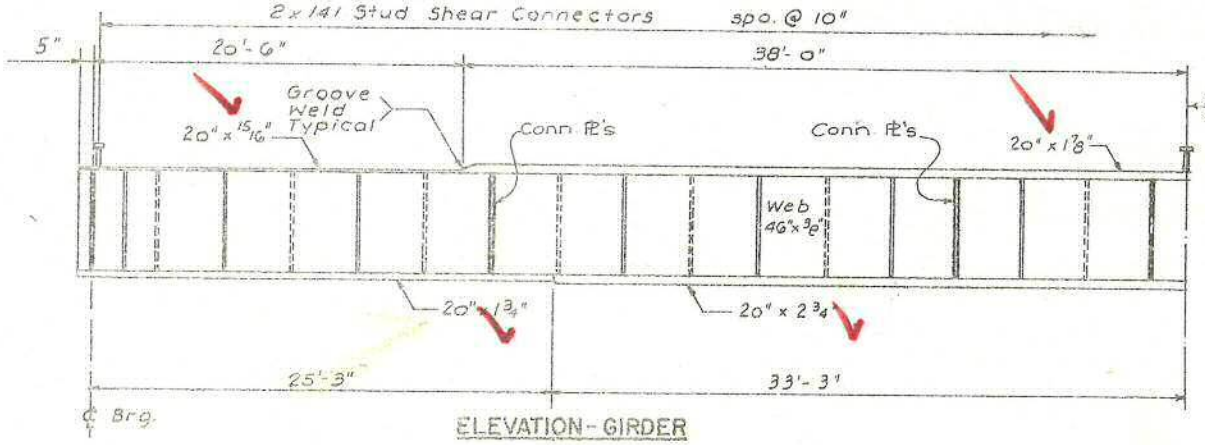

ELEVATION - GIRDER

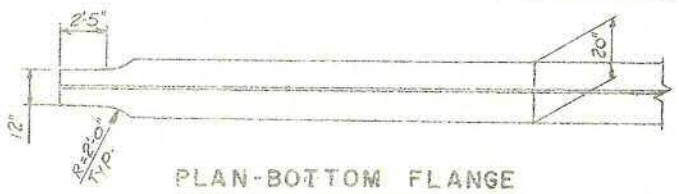

PLAN - BOTTOM FLANGE

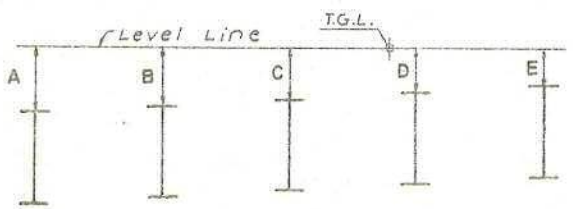

THEORETICAL VERTICAL MEASUREMENTS AT ℄ BRG.

BRG. LINE	VERTICAL MEASUREMENTS TO TOP OF STEEL				
	A	B	C	D	E
1	1'-11¼"	1'-7 15/16"	1'-2⅞"	10 11/16"	6½"
2	1'-11⅞"	1'-7 15/16"	1'-3"	10 9/16"	6⅛"

ADJUSTMENT FOR CAMBER		
	FASCIA GIRDER	INTERIOR GIRDER
SLAB CONCRETE	2"	2'8"
V.C.	0	0
SUPERIMPOSD DEAD LOAD	½"	⅝"
D.L. STEEL ERECTED	1"	1"
TOTAL	3½"	3½"

BUTTERNUT INTERCHANGE
F.A.I. 690 & F.A.I. 481

BRIDGE No. 7
"WN" LINE over ROUTE 1690 W.B.
SUPERSTRUCTURE

DRAWING NO.	SCALE	DATE	SHEET NO.
7504-02	As Shown	8/15/70	156

LOCKWOOD, KESSLER & BARTLETT, INC.
CONSULTING ENGINEERS — SYOSSET, NEW YORK

FED ROAD REG. NO.	STATE	CONTRACT NO.	SHEET NO.	TOTAL SHEETS
1	N.Y.	D259214	365	432
BRIDGE REHABILITATION PROJECT (ELEMENT SPECIFIC)				
VARIOUS BRIDGES ON INTERSTATE 481				
TOWNS OF DEWITT AND CICERO				
ONONDAGA COUNTY				
P.I.N. 305613		B.I.N. ALL BIN'S		

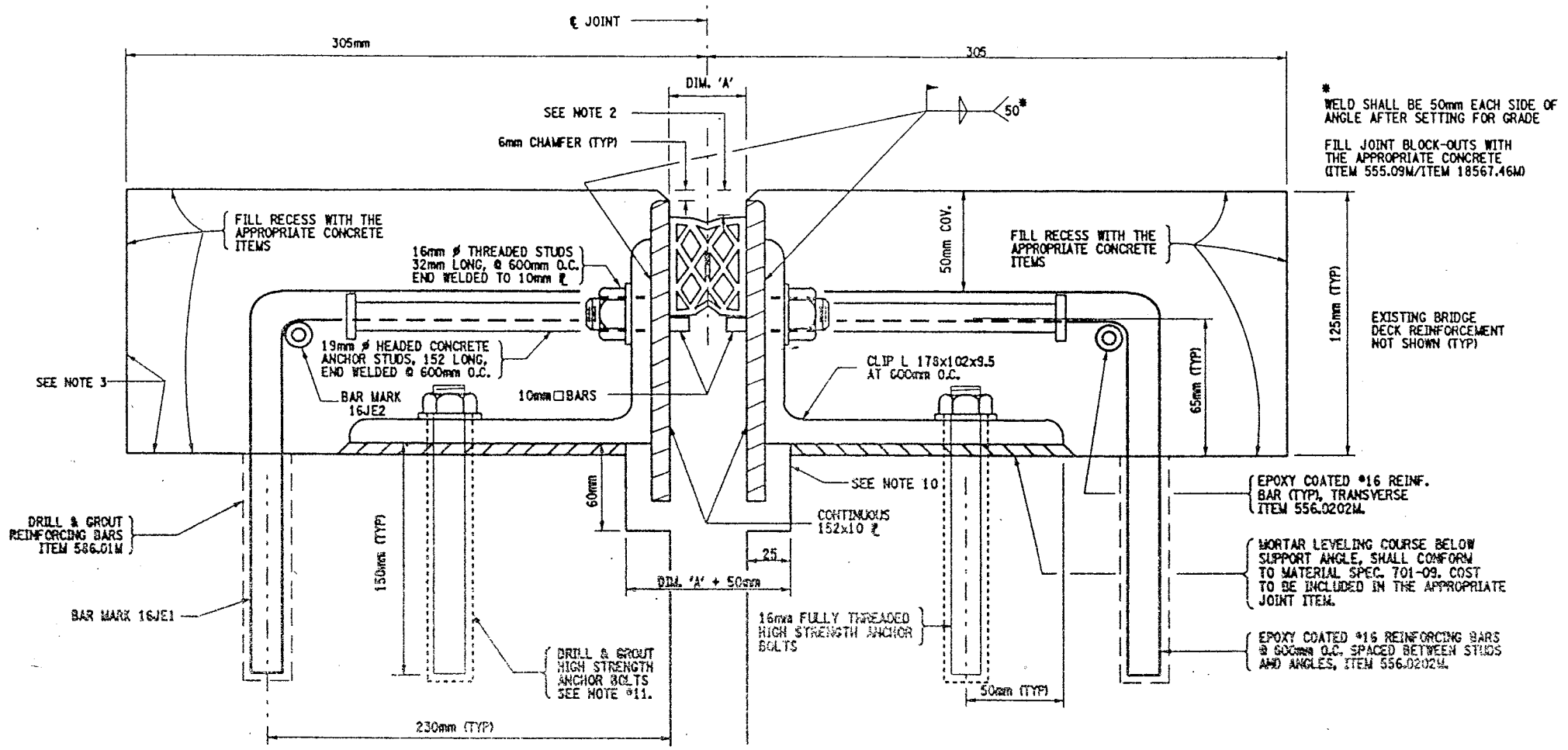

MODIFIED ARMORED COMPRESSION JOINT DETAIL

FOR INSTALLATION LOCATIONS SEE JOINT TABLE

NOT TO SCALE

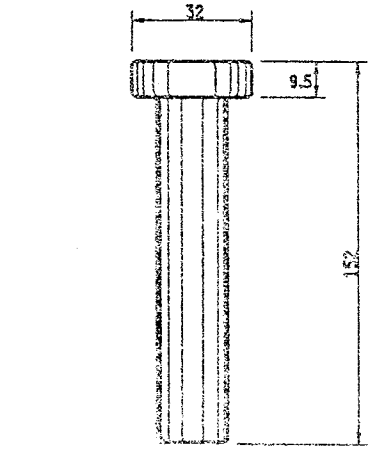

DETAIL OF HEADED CONCRETE ANCHOR STUD

NOT TO SCALE

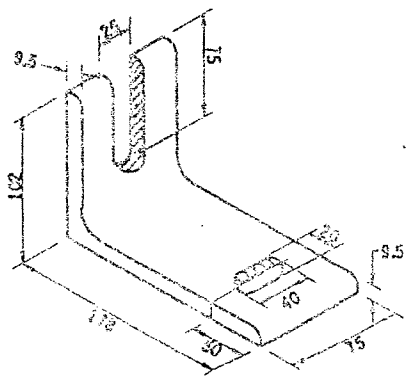

DETAIL OF CLIP ANGLE

NOT TO SCALE

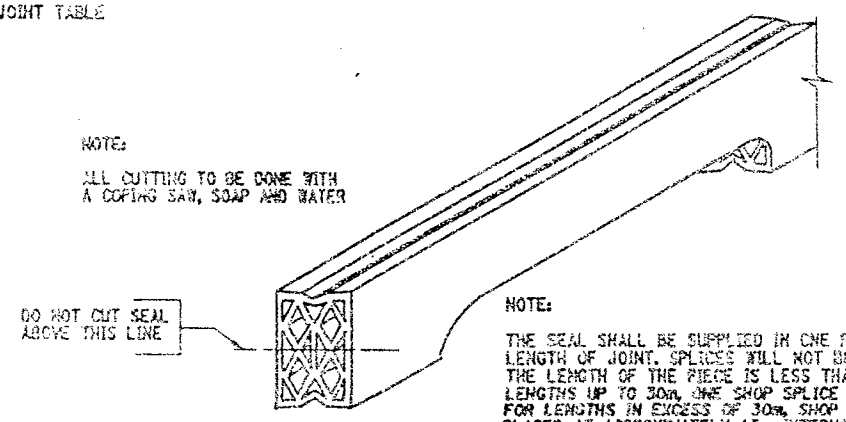

DETAIL FOR CUTTING SEAL

NOT TO SCALE

EPOXY POLYSULFIDE GROUT NOTE:

CONTRACTOR MAY WITH THE APPROVAL OF THE ENGINEER USE MATERIAL SPECIFICATION 721-03 EPOXY POLYSULFIDE GROUT, AT THE RECESSES. INSTEAD OF THE 12 HOUR CONTINUOUS PREWETTING REQUIREMENTS (PROJECT PROPOSAL). CONTRACTOR MUST ENSURE PROPER CONSTRUCTION PRACTICES ARE FOLLOWED WHEN USING THIS GROUT. THE USE OF EPOXY POLYSULFIDE GROUT SHALL BE AT NO ADDITIONAL COST TO THE STATE.

SEALS (mm)			ARMORED JOINT SYSTEM	
TYPE	NOMINAL WIDTH	DIM. "A" @ 20°C.	TYPE	END CONDITION
1	44	25	A1	Fixed End Only
2	51	30	A2	Exp. up to 18 m
3	64	38	A3	Exp. over 18 m to 23 m
4	76	44	A4	Exp. over 23 m to 27 m
5	89	52	A5	Exp. over 27 m to 38 m
6	102	60	A6	Exp. over 38 m to 46 m

Maximum Skew Limits: Fixed End - No Limit
Exp. End - 45° A2 thru A6

LIST OF ITEMS USED:

ITEM 555.09M - STRUCT. CONCRETE, CLASS "HP" (CM)
ITEM 556.0202M - EPOXY COATED BAR REINF. FOR STRUCT. (KG)
ITEM 567.31M - MOD. ARMORED JOINT SYSTEM W/ COMP. SEAL TYPE A1 (m)
ITEM 567.32M - MOD. ARMORED JOINT SYSTEM W/ COMP. SEAL TYPE A2 (m)
ITEM 567.35M - MOD. ARMORED JOINT SYSTEM W/ COMP. SEAL TYPE A5 (m)
ITEM 567.36M - MOD. ARMORED JOINT SYSTEM W/ COMP. SEAL TYPE A6 (m)
ITEM 18567.46M - ELASTOMERIC CONC. FOR BRIDGE JT. SYSTEMS (M)
ITEM 586.01M - DRILL & GROUT REINF. BARS (mm)

GENERAL NOTES:

1. THE TEMPERATURE OF THE BRIDGE MUST BE TAKEN ON THE STRUCTURAL STEEL SURFACE TO DETERMINE THE TEMPERATURE CORRECTION FOR THE JOINT OPENINGS.
2. THIS DEPTH SHALL BE INDICATED ON THE SHOP DRAWINGS AND SHALL BE SUCH THAT WHEN THE SEAL IS COMPRESSED TO 50% OF ITS NORMAL WIDTH, THE TOP OF THE SEAL SHALL BE NOT LESS THAN 6mm NOR MORE THAN 19mm BELOW THE TOP OF THE ROADWAY.
3. RECESSES RECEIVING ITEM 555.09M. AFTER SURFACE PREPARATION, THOROUGHLY WET THE CONCRETE SURFACE AND ALL POROUS SURFACES TO BE IN CONTACT WITH NEW CONCRETE, FOR 12 HOURS. NOTE THE USE OF MATERIAL SPECIF. 705-22 PORTLAND CEMENT MORTAR BONDING GROUT HAS BEEN ELIMINATED, SEE INSERT IN PROJECT PROPOSAL.
4. A WATER-TIGHT INTEGRITY TEST SHALL BE PERFORMED BY THE CONTRACTOR AT ALL COMPRESSION SEAL JOINT INSTALLATIONS. THE FOLLOWING TEST PARAMETERS SHALL BE INCORPORATED IN THE TEST:
   1. A 15 MINUTE MINIMUM PERIOD OF STANDING WATER, WITH A 25mm MINIMUM DEPTH SHALL BE USED.
   2. IN ADDITION, IN LOCATIONS OF COPED AREAS OF THE SEAL, BENDS, ETC., WATER PRESSURE SHALL BE APPLIED, TO THE SATISFACTION OF THE EIC FOR A 15 MINUTE PERIOD.
   3. LIMITS OF TEST AREA SHALL BE FROM FACE OF CURB TO FACE OF CURB ON THE DECK SURFACE.
5. NO PAYMENT WILL BE MADE TO THE CONTRACTOR FOR THE JOINT IF, IN THE OPINION OF THE ENGINEER, THE INSTALLED JOINT LEAKS WITHIN THE 15 MINUTE TEST PERIOD.
6. PRIOR TO THE START OF WORK AT EACH JOINT, THE CONTRACTOR SHALL SUBMIT A WRITTEN PLAN FOR THE SPECIFICS OF THE TESTING, INCLUDING CONTAINMENT OF THE WATER AND THE METHOD TO BE USED FOR ACCESS BY THE E.I.C. TO THE BOTTOM OF THE JOINT BEING TESTED.
7. THE COST OF ALL LABOR, EQUIPMENT AND MATERIALS REQUIRED FOR THE TESTING WHICH INCLUDES, BUT IS NOT LIMITED TO:
   1. A CONTAINMENT SYSTEM FOR THE TEST WATER.
   2. PROVISIONS FOR E.I.C. ACCESS TO THE BOTTOM OF THE JOINT.
   SHALL BE INCLUDED IN THE PRICE BID FOR THE RESPECTIVE JOINT ITEMS.
8. THE COST OF ALL LABOR, EQUIPMENT, AND MATERIALS TO INSTALL THE NEW JOINT SHALL BE INCLUDED IN THE UNIT PRICE BID FOR THE APPROPRIATE JOINT ITEM.
9. MORTAR LEVELING COURSE SHALL CONFORM TO MATERIAL SPECIFICATION 701-09 AND SHALL BE INCLUDED IN THE PRICE BID FOR THE APPROPRIATE JOINT ITEM.
10. THE DIMENSIONS OF THE REMOVAL AREA UNDER THE 152x10 PLATES ARE SHOWN TO ALLOW SPACE FOR THE PLATES TO REST FREELY. IF THERE IS ALREADY ADEQUATE SPACE, NO CONCRETE REMOVAL OR REPLACEMENT IS REQUIRED IN THIS AREA.
11. 16 mm ⌀ ASTM A325M ANCHOR BOLT TO BE DRILLED AND GROUTED IN PLACE IN ACCORDANCE WITH THE REQUIREMENTS OF SUB-SECTION 586-3.02. GROUTING MATERIALS SHALL BE IN ACCORDANCE WITH MATERIALS SUB-SECTION 701-07 ANCHORING MATERIALS-CHEMICALLY CURING. HOLES TO BE DRILLED TO THE DIAMETER AND DEPTH RECOMMENDED BY THE MANUFACTURER OF THE GROUTING MATERIAL (MIN. DEPTH OF 150 mm). THE COST OF THE ANCHORS, INCLUDING DRILLING AND GROUTING, SHALL BE INCLUDED IN THE UNIT PRICE BID FOR THE APPROPRIATE JOINT SYSTEM ITEM.
12. IT IS DESIRABLE TO HAVE THE ARMORED JOINT WITH ITS COMPRESSION SEAL ASSEMBLED IN THE SHOP AND DELIVERED TO THE JOB SITE ALL SET FOR INSTALLATION IN ITS PREFORMED RECESS IN THE STRUCTURAL SLAB. IN CASES WHERE THE ARMORED JOINT CANNOT BE ASSEMBLED IN THE SHOP, DUE TO ITS EXCESSIVE LENGTH CAUSING SHIPPING PROBLEMS, THE JOINT SHALL BE SEALED WITH THE COMPRESSION SEAL BEFORE THE STRUCTURE IS OPENED TO TRAFFIC INCLUDING CONSTRUCTION TRAFFIC, AND BEFORE DIS CONTINUING OPERATIONS WHEN WORK IS SUSPENDED DURING THE WINTER.

ALL DIMENSIONS ARE IN mm UNLESS OTHERWISE NOTED

AS BUILT REVISIONS

SIGNATURE DATE

INTERSTATE 481

COMPRESSION SEAL JOINT DETAILS

STATE OF NEW YORK
DEPARTMENT OF TRANSPORTATION

FILENAME	REGION	DATE	DRAWING NO.
305613AJ.JA1	3	10/02	JD-1

DESIGN SUPERVISOR ____ JOB MANAGER ____ DESIGNED BY ____ DRAFTED BY ____ ESTIMATED BY ____ CHECKED BY ____ CHECKED BY ____

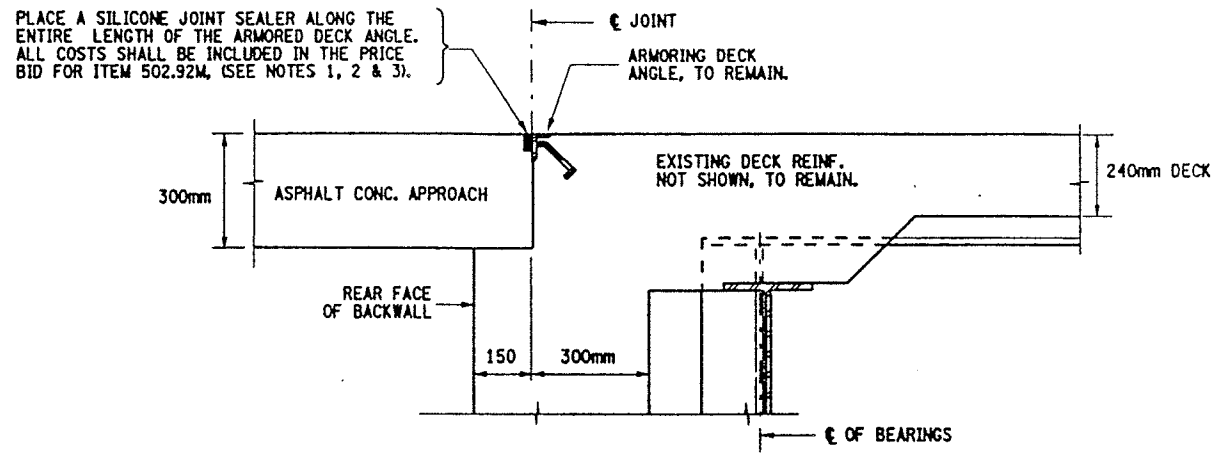

TYPICAL SECTION VIEW
EXISTING ARMORED DECK ANGLE AT ABUTMENT

BIN 1093520 - W. ABUT. (BEG. ABUT.)
BIN 1093540 - N. ABUT. (END ABUT.)
NOT TO SCALE

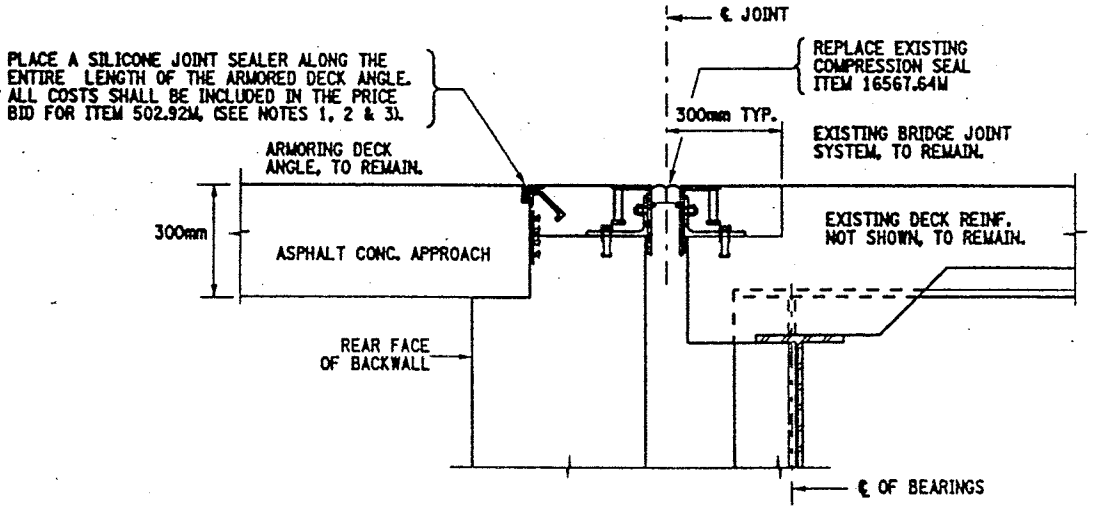

TYPICAL SECTION VIEW
EXISTING ARMORED JOINT SYSTEM AT ABUTMENT

BIN 1093520 - E. ABUT. (END ABUT.)
BIN 1093540 - S. ABUT. (BEG. ABUT.)
NOT TO SCALE

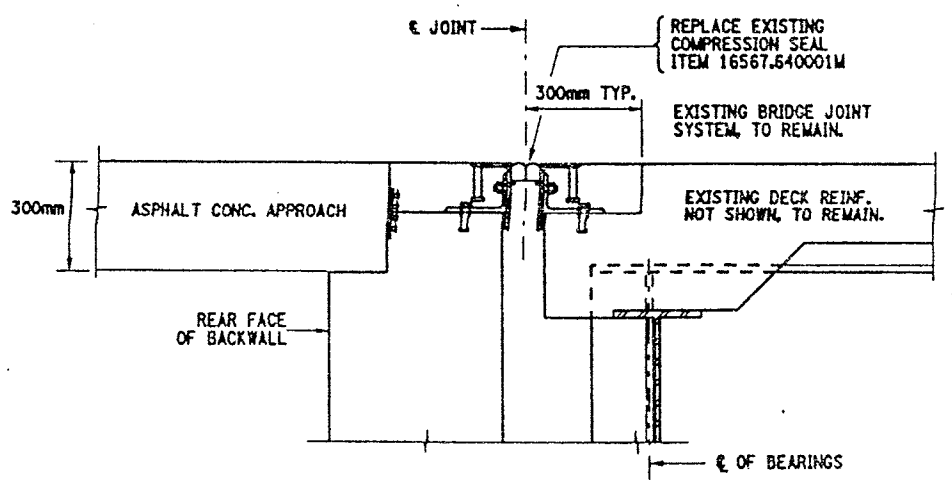

TYPICAL SECTION VIEW
EXISTING ARMORED JOINT SYSTEM AT ABUTMENT

BIN 1072791 - BOTH ABUTMENTS
NOT TO SCALE

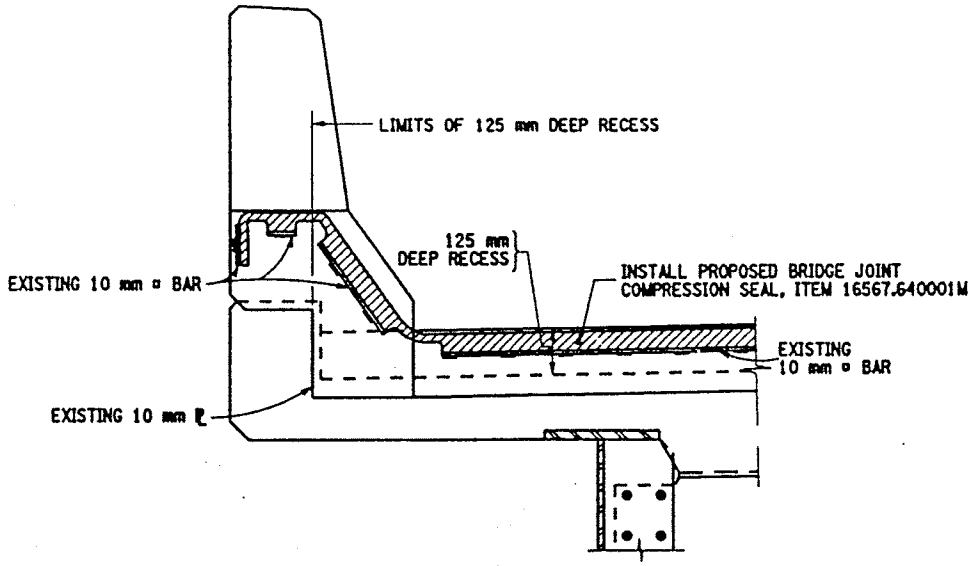

PROPOSED JOINT SEAL
TYPICAL (CONCRETE PARAPET)

BIN 1072791 - REPLACE SEAL AT BOTH ABUTMENTS
NOT TO SCALE

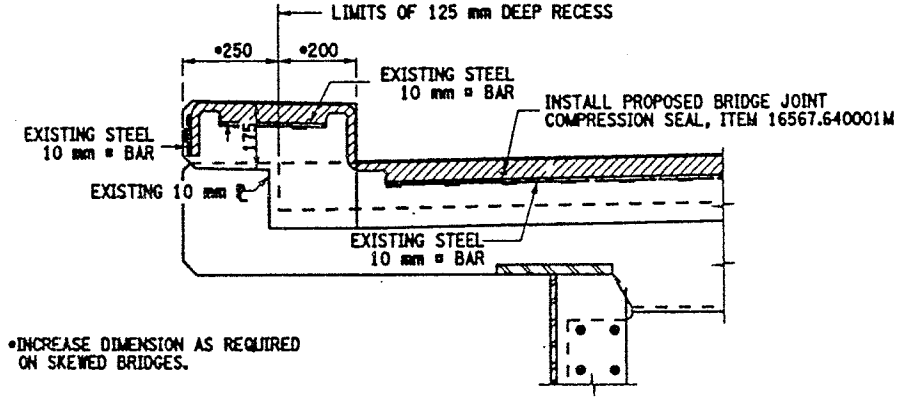

PROPOSED JOINT SEAL
TYPICAL (BRUSH CURB)

BIN 1093520 - EAST ABUTMENT
BIN 1093540 - SOUTH ABUTMENT
NOT TO SCALE

LIST OF ITEMS USED:

ITEM 502.92M - SEALING TRANSVERSE JOINTS (M)
ITEM 16567.640001M - REPLACE COMPRESSION SEAL FOR EXISTING BRIDGE JOINT (M)

FED ROAD REG. NO.	STATE	CONTRACT NO.	SHEET NO.	TOTAL SHEETS
1	N.Y.	D259214	411	432

BRIDGE REHABILITATION PROJECT (ELEMENT SPECIFIC)
VARIOUS BRIDGES ON INTERSTATE 481
TOWNS OF DEWITT AND CICERO
ONONDAGA COUNTY
P.I.N. 305613 B.I.N. VARIOUS

DETAILS ON THIS SHEET PERTAIN TO BIN'S 1072791, 1093520 & 1093540.

NOTES:

1) TO SEAL THE INTERFACE BETWEEN THE EXISTING ASPHALT APPROACH AND THE EXISTING ARMOR DECK ANGLE, USE A SILICONE JOINT SEALER FROM THE MATERIALS BUREAU APPROVED LIST.
2) THE SILICONE JOINT SEALER SHALL BE PLACED TRANSVERSELY FOR THE ENTIRE LENGTH OF THE ARMORED DECK ANGLE.
3) PRIOR TO PLACEMENT OF THE SILICONE JOINT SEALER THE AREA SHALL BE CLEANED AND FREE OF ANY LOOSE MATERIAL TO THE SATISFACTION OF THE ENGINEER.
4) REFER TO DWG. NO. JT-2 AND JT-3 FOR ADDITIONAL INFORMATION.
5) NO PLAN VIEW SHOWN FOR THESE STRUCTURES.
6) REFER DWG. NO. JD-43, FOR ADDITIONAL INFORMATION BIN 1072791.

WORK TO BE DONE:

BIN 1072791 -

REPLACE EXISTING COMPRESSION SEALS AT BOTH ABUTMENTS.
BEG. ABUT. (WEST) EXISTING TYPE A-1 ARMORED JOINT SYSTEM
END ABUT. (EAST) EXISTING TYPE A-5 ARMORED JOINT SYSTEM

BIN 1093520 -

BEG. ABUTMENT (WEST ABUT.) - EXISTING ARMORED DECK ANGLE, TO REMAIN. PLACE SILICONE SEALER MATERIAL.

END ABUTMENT (EAST ABUT.) - EXISTING TYPE A-5 ARMORED JOINT SYSTEM WITH COMPRESSION SEAL AND ARMORED DECK ANGLE TO REMAIN. REPLACE COMPRESSION SEAL AND PLACE SILICONE SEALER MATERIAL.

BIN 1093540 -

BEG. ABUTMENT (SOUTH ABUT.) - EXISTING TYPE A-5 ARMORED JOINT SYSTEM WITH COMPRESSION SEAL AND ARMORED DECK ANGLE TO REMAIN. REPLACE COMPRESSION SEAL AND PLACE SILICONE SEALER MATERIAL.

END ABUTMENT (NORTH ABUT.) - EXISTING ARMORED DECK ANGLE, TO REMAIN. PLACE SILICONE SEALER MATERIAL.

TIMBER BARRIER:

BIN 1072791 SB - SOUTH FASCIA (LEFT SIDE) PARAPET HAS A TIMBER NOISE BARRIER ATTACHED TO THE BACK SIDE OF THE PARAPET. THIS TIMBER NOISE BARRIER TO REMAIN IT MAY BE NECESSARY TO TEMPORARILY REMOVE THE SUPPORT BRACKETS TO FACILITATE INSTALLATION OF THE PROPOSED BRIDGE JOINT SEAL.

ANY ADDITIONAL SUPPORT TO THE TIMBER NOISE BARRIER DEEMED NECESSARY BY THE ENGINEER, DURING THIS REMOVAL OF THE SUPPORT BRACKETS SHALL BE INCLUDED IN THE PRICE BID FOR ITEM 16567.640001M.

ALL DIMENSIONS ARE IN mm UNLESS OTHERWISE NOTED

AS BUILT REVISIONS

SIGNATURE DATE

I-690 EB RAMP TO I-481 NB & I-481 OVER THOMPSON RD
WN LINE OVER I-481 SB

BRIDGE JOINT DETAILS

STATE OF NEW YORK
DEPARTMENT OF TRANSPORTATION

FILENAME	REGION	DATE	DRAWING NO.
305613AJ.JA1	3	10/02	JD-47

DESIGN SUPERVISOR — JOB MANAGER — DESIGNED BY — ESTIMATED BY — DRAFTED BY — CHECKED BY

BIN: 1093540
I690 EB - I481 NB RAMP /
I481 NB - I 690 WB RAMP

BEGIN ABUTMENT CONDITION SKETCH

NOT TO SCALE

DATE: 02/04/2014

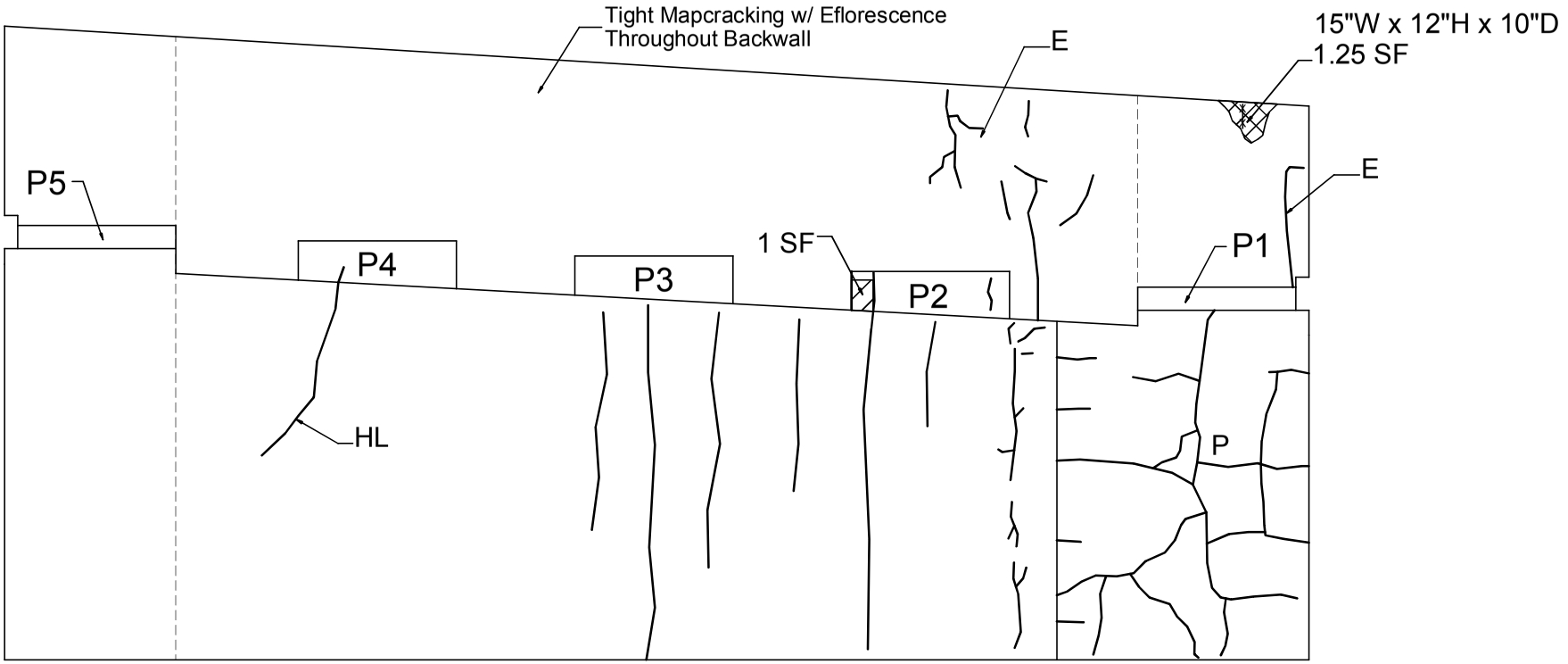

ELEVATION

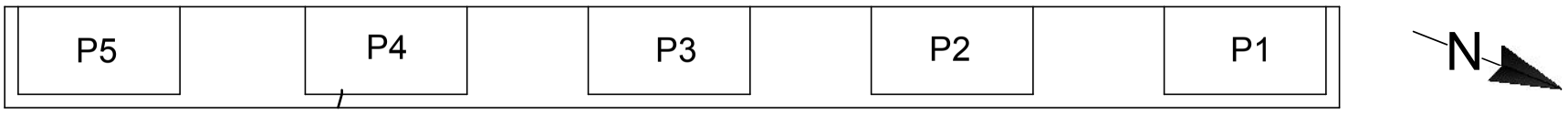

PLAN

LEGEND					
Spalling w/ Exposed Bars	P	Patch		Crack	
E	Efflorescence	HL	Hairline		Hollow

BIN: 1093540
I690 EB - I481 NB RAMP /
I481 NB - I 690 WB RAMP

END ABUTMENT CONDITION SKETCH

NOT TO SCALE

DATE: 02/04/2014

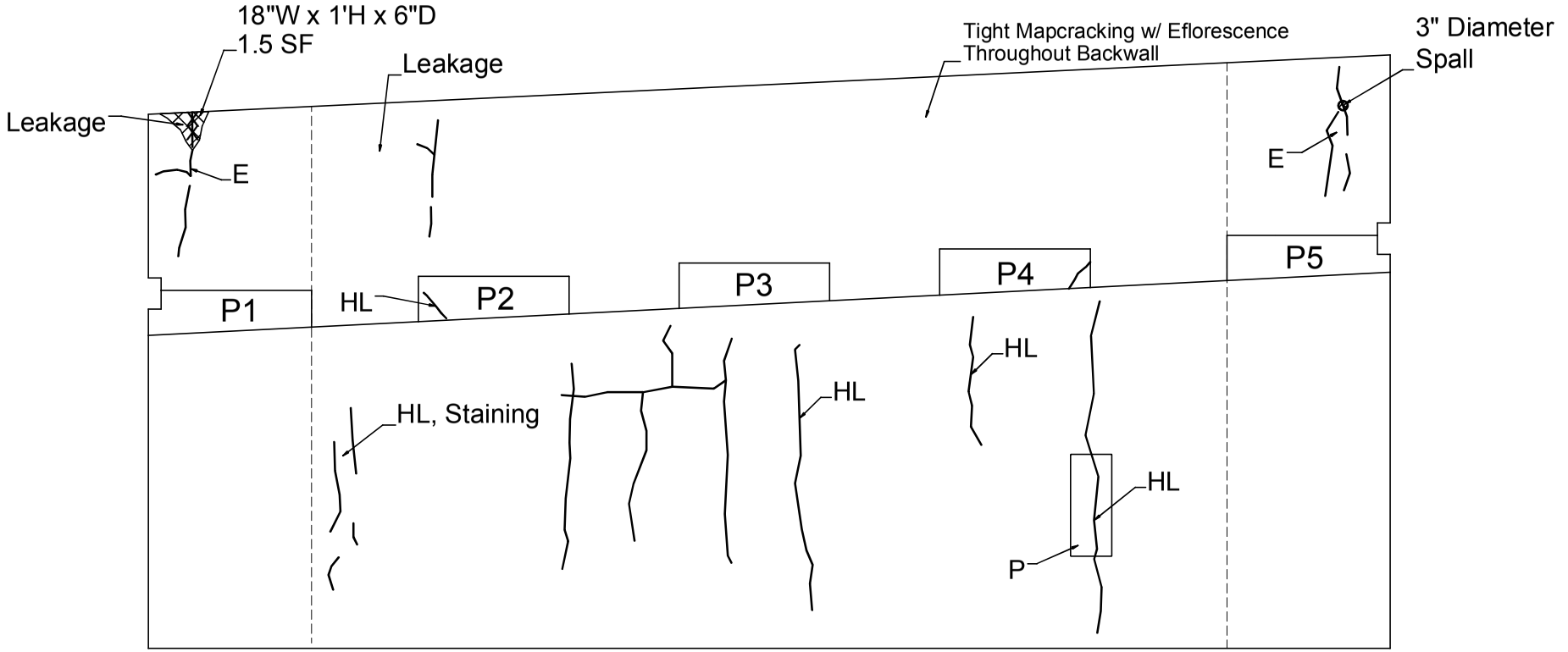

ELEVATION

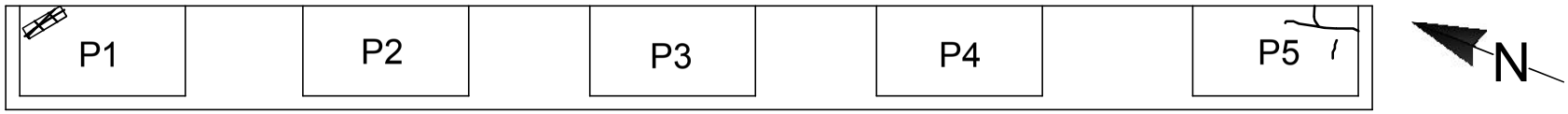

PLAN

LEGEND			
Spalling w/ Exposed Bars	P Patch	Crack	
E Efflorescence	HL Hairline		

BIN: 1093540
I690 EB - I481 NB RAMP /
I481 NB - I 690 WB RAMP

TOP OF DECK DETERIORATION SKETCH

NOT TO SCALE

DATE: 02/04/2014

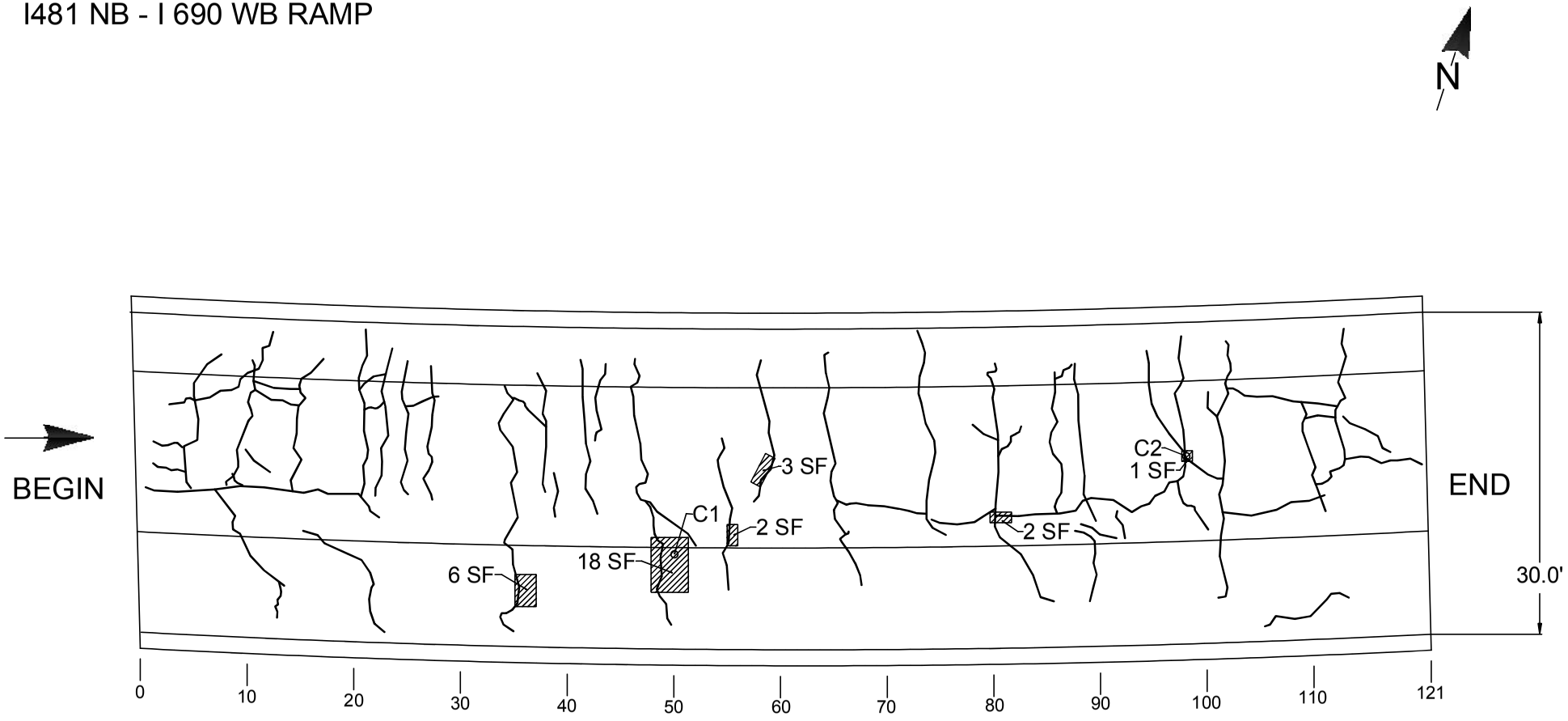

TOTAL DAMAGED AREA EQUALS 32 SF WHICH IS 0.9% OF DECK SURFACE

LEGEND

- Hollow Concrete
- Coring Location
- Crack

BIN: 1093540
I690 EB - I481 NB RAMP /
I481 NB - I690 WB RAMP

UNDERSIDE OF DECK DETERIORATION SKETCH

NOT TO SCALE

DATE: 02/04/2014

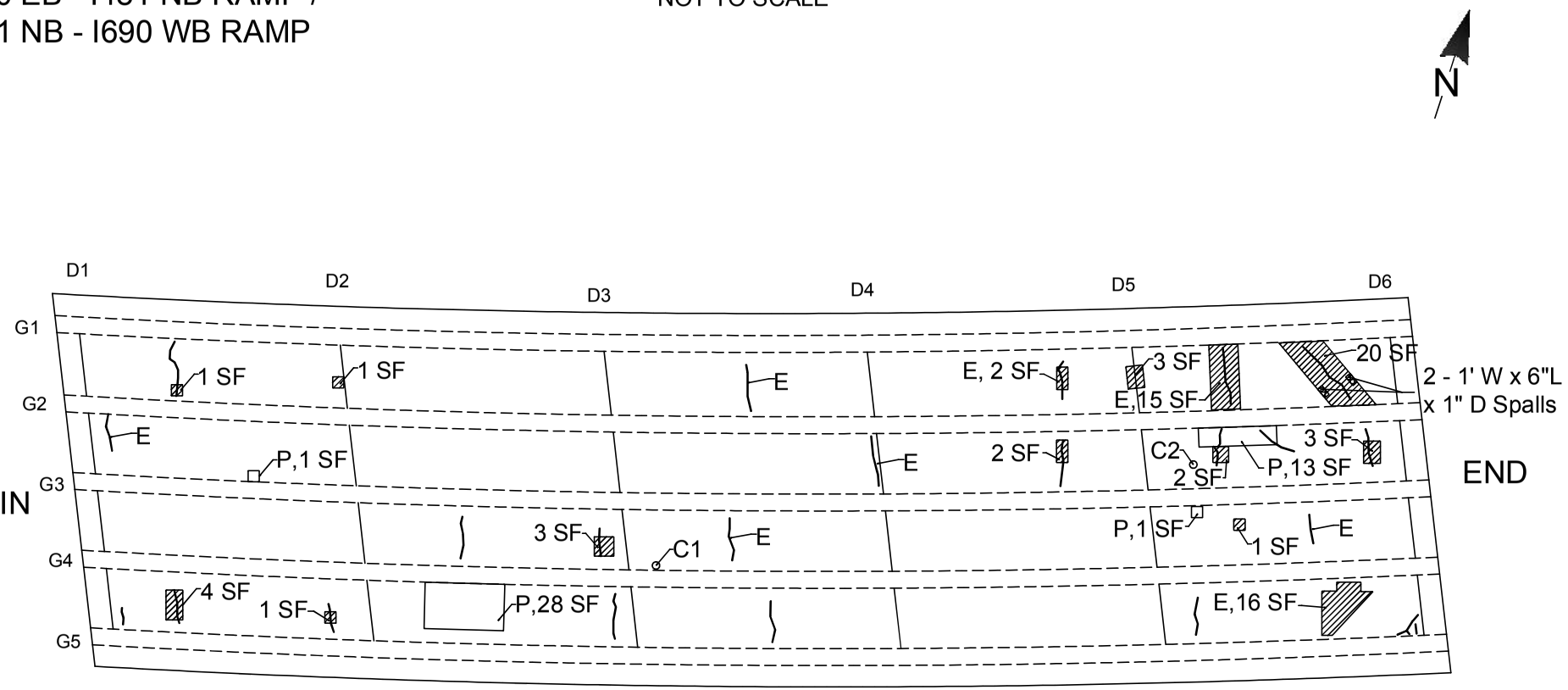

TOTAL DAMAGED AREA EQUALS 75 SF WHICH IS 1.9% OF DECK SURFACE

LEGEND			
	Hollow Concrete	P	Patch
E	Efflorescence		Spall
o	Core Location		Crack

IN-DEPTH PHOTO DOCUMENTATION

BIN: 1093540
I690 EB - I481 NB RAMP /
I481 NB - I 690 WB RAMP

IN-DEPTH INSPECTION
PHOTO LOCATION SKETCH

DATE: 02/04/2014

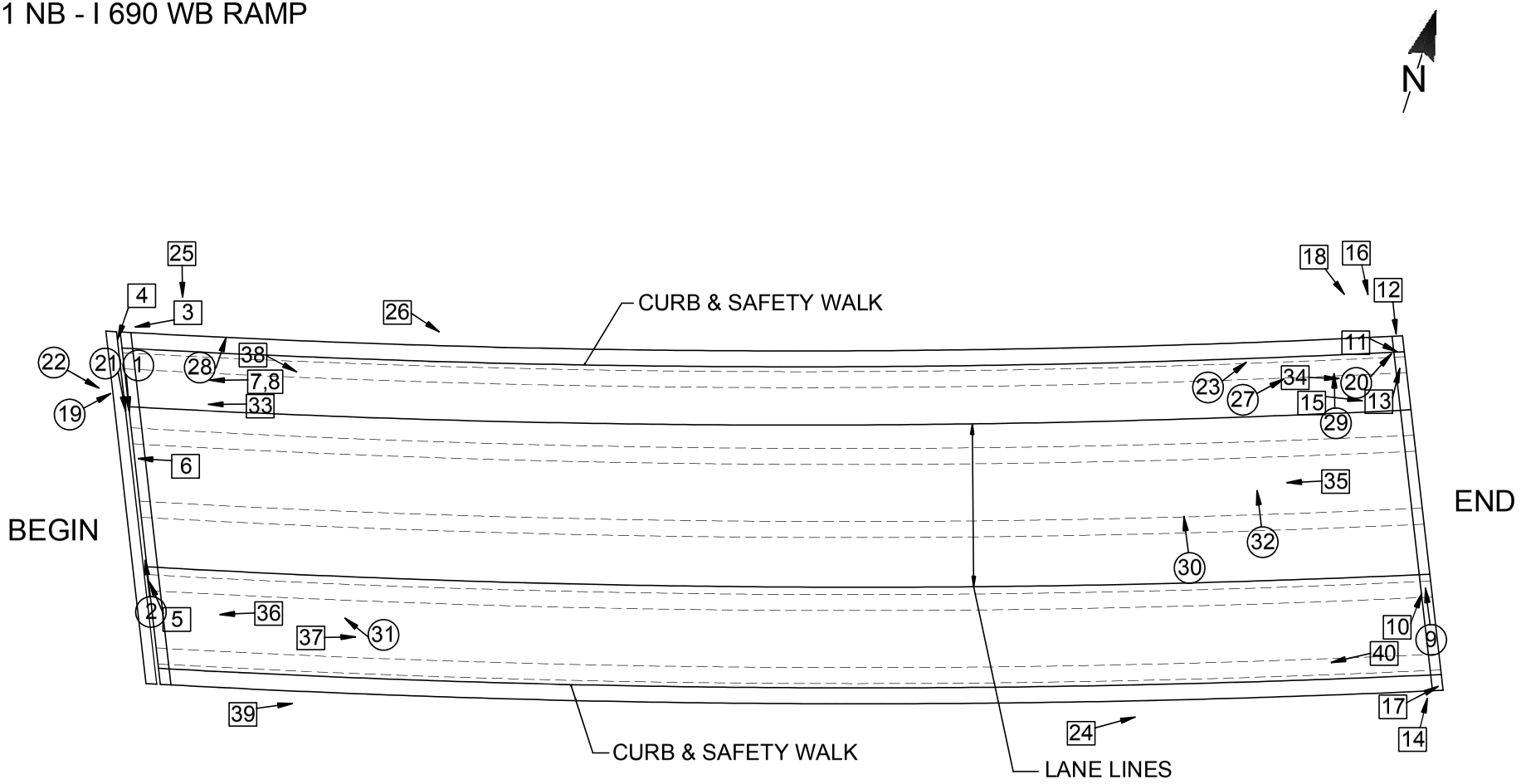

LEGEND	
(XX)	Photo Above Deck
[XX]	Photo Below Deck

In-Depth Inspection Photos

I-690 EB – I-481 NB Ramp over
I-481 NB – I-690 WB Ramp BIN 1093540



DESCRIPTION: BEGIN APPROACH JOINT WITH DECK AT LEFT SHOULDER – LOOKING FROM LEFT TO RIGHT

PHOTO 1



DESCRIPTION: BEGIN APPROACH JOINT WITH DECK AT RIGHT SHOULDER – LOOKING FROM RIGHT TO LEFT

PHOTO 2



DESCRIPTION: BEGIN ABUTMENT BACKWALL AT LEFT

PHOTO 3



DESCRIPTION: BEGIN ABUTMENT BEARING B1 – LOOKING FROM LEFT TO RIGHT

PHOTO 4



DESCRIPTION: BEGIN ABUTMENT BEARING B4 – LOOKING FROM RIGHT TO LEFT

PHOTO 5



DESCRIPTION: BEGIN ABUTMENT PEDESTAL P2 FRONT RIGHT SIDE – LOOKING FROM RIGHT TO LEFT

PHOTO 6



DESCRIPTION: BEGIN ABUTMENT BACKWALL AT BAY 1

PHOTO 7



DESCRIPTION: BEGIN ABUTMENT STEM – LEFT SIDE

PHOTO 8



DESCRIPTION: END APPROACH PAVEMENT TRANSITION HEADER – LOOKING FROM RIGHT TO LEFT

PHOTO 9



DESCRIPTION: END ABUTMENT BEARING B4– RIGHT SIDE

PHOTO 10



DESCRIPTION: END ABUTMENT BEARING B1 – LEFT SIDE

PHOTO 11



DESCRIPTION: END ABUTMENT PEDESTAL P1 – LEFT SIDE

PHOTO 12



DESCRIPTION: END ABUTMENT PEDESTAL P1 – RIGHT SIDE

PHOTO 13



DESCRIPTION: END ABUTMENT PEDESTAL P5 – RIGHT SIDE

PHOTO 14



DESCRIPTION: END ABUTMENT BACKWALL AT BAY 1

PHOTO 15



DESCRIPTION: END ABUTMENT BACKWALL AT LEFT FASCIA BAY

PHOTO 16



DESCRIPTION: END ABUTMENT BACKWALL – RIGHT SIDE

PHOTO 17



DESCRIPTION: END ABUTMENT STEM – LOOKING FROM LEFT TO RIGHT

PHOTO 18



DESCRIPTION: BEGIN APPROACH LEFT SIDE AT JOINT HEADER – LOOKING FROM RIGHT TO LEFT

PHOTO 19



DESCRIPTION: END APPROACH LEFT SIDE AT PAVEMENT TRANSITION – LOOKING FROM RIGHT TO LEFT

PHOTO 20



DESCRIPTION: BEGIN APPROACH PAVEMENT TRANSITION – LOOKING FROM LEFT TO RIGHT

PHOTO 21



DESCRIPTION: TOP OF DECK – LOOKING FROM BEGIN TO END

PHOTO 22



DESCRIPTION: SAFETY WALK LEFT NEAR END – LOOKING FROM BEGIN TO END

PHOTO 23



DESCRIPTION: RIGHT FASCIA AT 2/3 SPAN – LOOKING FROM BEGIN TO END

PHOTO 24



DESCRIPTION: LEFT FASCIA NEAR BEGIN (TYPICAL RIGHT FASCIA)

PHOTO 25



DESCRIPTION: LEFT FASCIA AT 1/3 SPAN -- LOOKING FROM BEGIN TO END

PHOTO 26



DESCRIPTION: LEFT RAILING NEAR END – LOOKING FROM BEGIN TO END

PHOTO 27



DESCRIPTION: LEFT RAILING POST 2 – LOOKING FROM RIGHT TO LEFT

PHOTO 28



DESCRIPTION: LEFT RAILING AT END – LOOKING FROM RIGHT TO LEFT

PHOTO 29



DESCRIPTION: DECK NEAR ¾ SPAN – LOOKING FROM RIGHT TO LEFT

PHOTO 30



DESCRIPTION: BEGIN RIGHT DECK – LOOKING FROM END TO BEGIN

PHOTO 31



DESCRIPTION: DECK NEAR END – LOOKING FROM RIGHT TO LEFT

PHOTO 32



DESCRIPTION: DECK BAY 1 NEAR DIAPHRAGM D1 – LOOKING FROM END TO BEGIN

PHOTO 33



DESCRIPTION: DECK BAY 1 NEAR END – LOOKING FROM BEGIN TO END

PHOTO 34



DESCRIPTION: DECK BAY 2 NEAR DIAPHRAGM D5 – LOOKING FROM END TO BEGIN

PHOTO 35



DESCRIPTION: DECK BAY 4 NEAR BEGIN – LOOKING FROM END TO BEGIN

PHOTO 36



DESCRIPTION: DECK BAY 4 NEAR DIAPHRAGM D1 – LOOKING FROM BEGIN TO END

PHOTO 37



DESCRIPTION: FRAMING – LOOKING FROM BEGIN TO END

PHOTO 38



DESCRIPTION: GIRDER G5 RIGHT SIDE – LOOKING FROM BEGIN TO END

PHOTO 39



DESCRIPTION: GIRDER G5 LEFT SIDE – LOOKING FROM END TO BEGIN

PHOTO 40

ASBESTOS SAMPLING SURVEY

Asbestos Sampling Survey

Location:

BIN 1093540

Interstate Route I-481 North Bound On Ramp over
Interstate Route I-690

Prepared for:

New York State
Department of Transportation

PIN 3056.13.111

LaBella Project No. 201001

August 2001

BIN 1093540
Interstate Route I-481 North Bound On Ramp over Interstate Route I-690

Note:

The above referenced bridge was previously surveyed for the presence of asbestos-containing materials (ACMs) in March of 2001. Based on laboratory analyses of bulk samples collected at that time, the following material was determined to contain asbestos:

Type of Material	Estimated Amount
Sheet Packing	6 square meters

See LaBella Associates report, dated March 2001 (NYSDOT PIN 3804.52.101) for more information.

Asbestos Sampling Survey

Location:

BIN 1093540

Interstate Route I-481 North Bound On Ramp over
Interstate Route I-690

Prepared for:

New York State
Department of Transportation

PIN 3804.52.101

LaBella Project No. 97132

March 2001

Table of Contents

Page

I. Project Summary 1

II. Site Description 1

III. Inspection Procedures 1

IV. Results 2

Certification 2

Figures and Table

I. Project Summary

In accordance with conditions of Term Agreement D010010, LaBella Associates, P.C. conducted an asbestos sampling survey of the Interstate Route I-481 North bound On Ramp bridge over Interstate Route I-690. Based on laboratory analyses of bulk samples collected, the following material was determined to contain asbestos:

BIN 1093540 Interstate Route I-481 North Bound On Ramp over Interstate Route I-690

Type of Material	Estimated Amount
Sheet Packing	6 Square Meters

II. Site Description

The Site is located in Onondaga County, New York. For the purpose of this report, the Site consists of the Interstate Route I-481 North bound On Ramp bridge over Interstate Route I-690 (See attached FIGURE 1 - Site Location Map).

III. Inspection Procedures

The following procedures were used to obtain the data for this Report:

A. A review of record drawings supplied by Region 3 personnel and a visual inspection of the subject structure were conducted to identify potential visible/accessible sources of asbestos-containing materials. Observations and notes were made to provide a description of the structure, and an estimate of the approximate amount, length, or area of ACM present.

B. Physical or operational constraints, which might affect the removal of the ACM, were identified and reported.

C. Bulk samples of suspected ACM were collected during the site inspection of the subject structure. Samples were taken from each homogeneous area that may contain ACM.

D. Samples were submitted for analysis. Preliminary PLM analyses of NOB materials were performed by LaBella Laboratories, a NYSDOH approved laboratory, to determine the presence and percentage of asbestos in each sample. TEM analyses of NOB materials, if necessary, were performed by AMA Analytical, Inc.

E. Lab results were used to determine the approximate location, type, and amount of the verified ACM.

F. A drawing of the structure at the Site was created, in order to show sample locations and the approximate locations and amounts of confirmed ACM observed in accessible locations.

Figures & Table

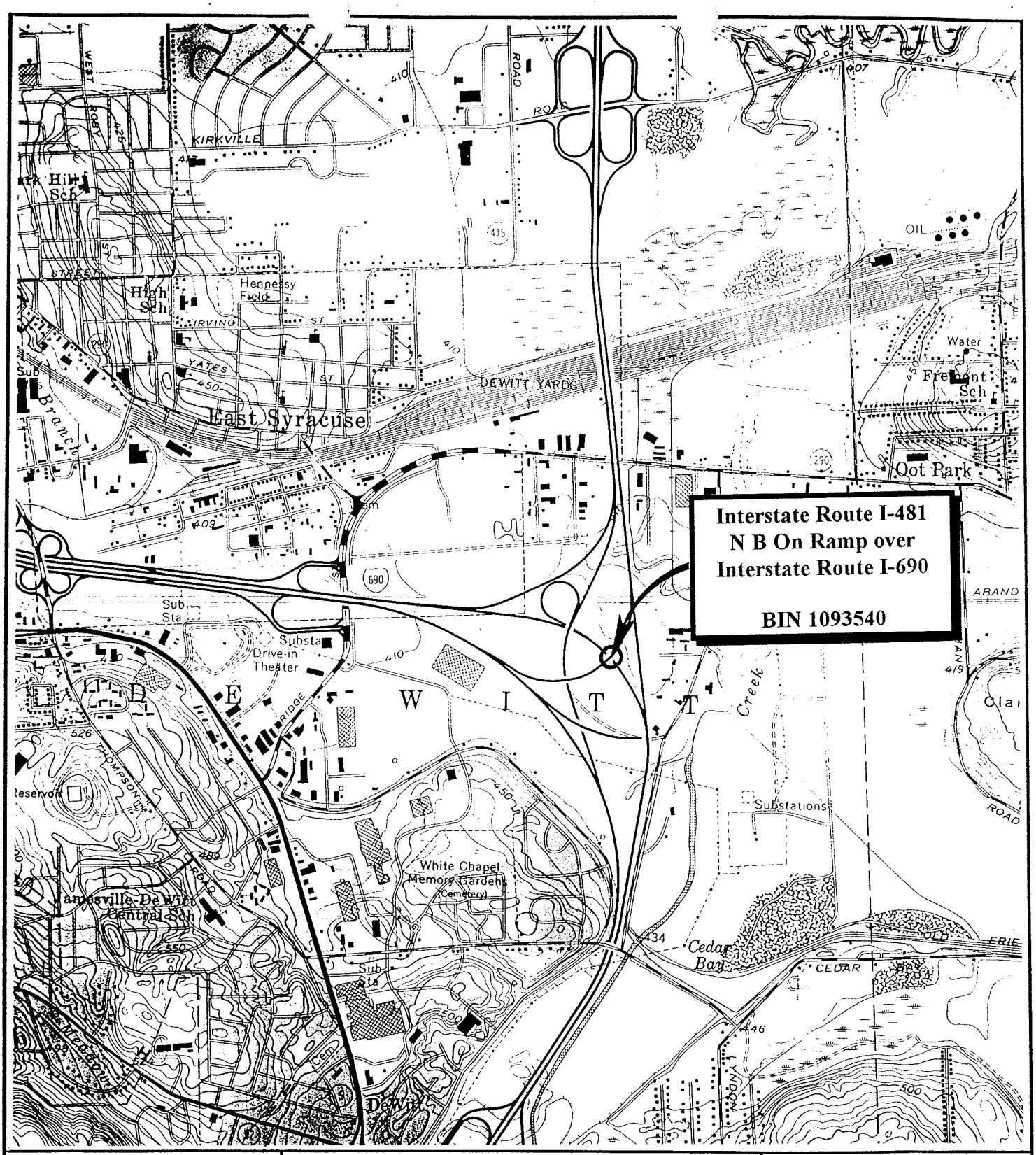

FIGURE 1
Site Location Map

Interstate Route I-481 N B On Ramp over
Interstate Route I-690
Onondaga County, New York

SCALE: 1" = 2000'

LABELLA

PROJECT NO. 97132

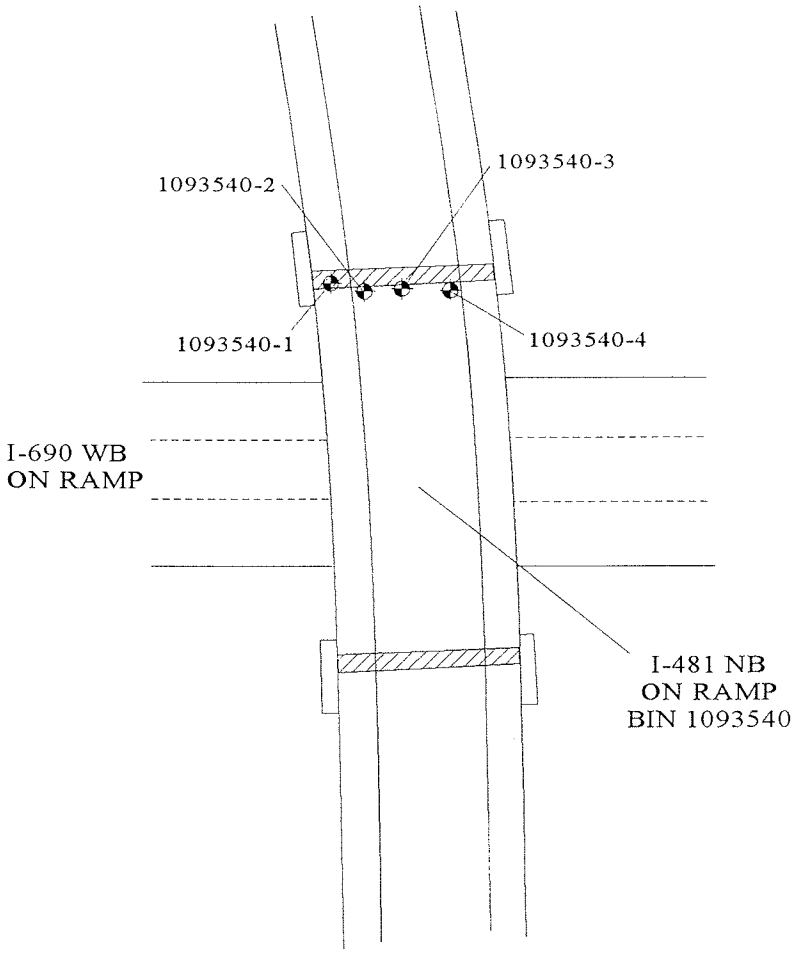

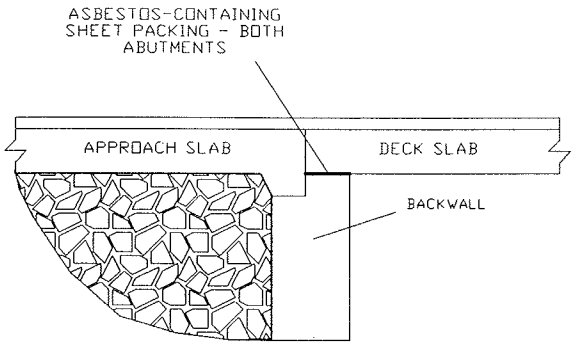

TYPICAL ABUTMENT SECTION

LEGEND

1093540-1 SAMPLE LOCATION

ASBESTOS-CONTAINING SHEET PACKING

NORTH

PROJECT TITLE: ASBESTOS SAMPLING SURVEY 11 BRIDGES ONONDAGA COUNTY, NY	PROJECT NO. 97132
	PIN 3804.52.101
FIGURE TITLE: FIGURE 2 - BIN 1093540 I-481 NB ON RAMP OVER I-690 SAMPLE LOCATIONS AND CONFIRMED ACM	DRAWN BY: TJK
	DATE: MARCH, 2001

Bulk Sample Results Table

Asbestos Sampling Survey
BIN 1093540
Interstate Route I-481 North Bound On Ramp over
Interstate Route I-690
Onondaga County, New York
LaBella Project # 97132
PIN 3804.52.101

Sample #	Sample Location	Type of Material	Results % Asbestos	Amount of Material	Specification Item No.
1093540-1	**North End of Bridge Between Deck & Abutment**	**Sheet Packing**	**40% Chrysotile**	**6 Square Meters**	**15202.063401 (M)**
1093540-2	North End of Bridge Beneath Bearing	Bearing Pad	None Detected	N/A	N/a
1093540-3	North End of Bridge on Pedestal	Gray Masonry Coating	None Detected	N/A	N/a
1093540-4	North End of Bridge on I-Beam	Green Paint	None Detected	N/A	N/a

HUDSON ENVIRONMENTAL SERVICES, INC.
Mail: 22 Hudson Falls Rd., So. Glens Falls, NY 12803
Delivery: 211 Ferry Blvd., So. Glens Falls, NY 12803
Phone: 518/747-1060 Fax: 518/747-1062

ANALYTICAL TEST RESULTS
N.Y.S.D.O.H. LAB ID#11140
*ANALYZED BY N.Y.S.D.O.H. LAB ID#10898

CLIENT: NYSDOT

SAMPLE DESCRIPTION: See Below

MATRIX: Solid

LOCATION: BIN 1093540

H.E.S. #: See Below

DATE SAMPLED: 04/02/03

TIME SAMPLED: 10:00 AM

DATE SAMPLE RECD: 04/14/03

TYPE SAMPLE: Grab

SAMPLER: G.Cook/NYSDOT

NOB BULK MATERIAL ANALYSIS FOR ASBESTOS

HES LAB ID#: 030414I	I01	I02	I03
LAB ID#: E03	916	917	918
CLIENT: SAMPLE ID/DESCRIPTION	1093540-01 G4, 1m from end	1093540-02 G2, 4m from end	1093540-03 G5 10m from End
COLOR	Green	Green	Green
HOMOGENEOUS(YES/NO)	Yes	Yes	Yes
ORGANIC %	46	49	48
ACID-SOLUBLE INORGANICS %	8	11	8
INSOL NON-ASBESTOS INORGANIC %	46	40	44
ASBESTOS ANALYSIS			
CHRYSOTILE %			
AMOSITE %			
CROCIDOLITE %			
OTHER AMPHIBOLE %			
TOTAL ASBESTOS % (PLM)	ND	ND	ND
ASBESTOS ANALYSIS			
TYPE OF ASBESTOS			
PERCENTAGE OF ASBESTOS (TEM)	ND	ND	ND
TOTAL	100	100	100

Approval By: [signature]

Date: 4/23/03

Hudson Environmental Services, Inc. certifies that the services provided were performed in accordance with the New York State Department of Health, Environmental Laboratory Approval Program certification manual. In the event of an error, HES's sole responsibility will be to perform reanalysis at its own expense. HES, Inc. assumes no other liability for damages incurred from the interpretation or use of the analysis provided.

(OVER)

HUDSON ENVIRONMENTAL SERVICES, INC.

Mail: 22 Hudson Falls Road, South Glens Falls, NY 12803
Delivery: 211 Ferry Blvd., South Glens Falls, NY 12803
Phone: 518/747-1060 Fax: 518/747-1062

CHAIN OF CUSTODY RECORD/ Lab Work Request

Client NYS Dept. of Transportation-Region 3
Client Contact/Person # Christopher Anderson
Project Location B.I.N.
Purchase Order
HES Contact William Frawley

Mail Address NYS Dept. of Transportation
333 E. Washington Street
Syracuse, NY 13202
Phone # (315) 428-4628

HES Use Only Lab ID	Sample ID / Description	Date Collected	TIME A=a.m. P=p.m.	SAMPLE TYPE C=Composite G=Grab MATRIX	C	G	# Conts.	ANALYSIS REQUIRED
030144101	1093540 - 01; G-4		A/P	SO		X	1	Asbestos Bulk - NOB
I02	1m from end		A/P					
I03	1093540 - 02; G-2		A/P	SO		X	1	" " "
	4m from end		A/P					
	1093540 - 03; G-5		A/P	SO		X	1	" " "
	10m from end		A/P					
			A/P					
			A/P					
			A/P					

Matrix: S - Soil; SE - Sediment; SO - Solid; SL - Sludge; O - Oil; DW - Drinking Water; GW - Ground Water; SW - Surface Water; L - Leachate; A - Air; WI - Wipes; DS - Drum Solids; DL - Drum Liquids; X - Other; WW - Waste Water

Special Instructions: Bridge coating - If PLM negative, TEM confirmation on all.

Sampled by: (Signature) Jeffrey W. Cook	Date/Time 4/2/03; 10:00a	Received by: (Signature)	Date/Time 4-16-03 12:30PM
Relinquished by: (Signature)	Date/Time	Received by: (Signature)	Date/Time
Relinquished by: (Signature)	Date/Time	Received by: (Signature)	Date/Time
Dispatched by: (Signature)	Method of Shipment:		Date/Time
Received @ Laboratory: Sue Brown	Date/Time 4/16/03 2:00PM	Turnaround Time: Normal	Lab Approval:

HES Use Only

Samples Were: 1. Shipped by / Hand Delivered NOTES:
2. Ambient or Chilled NOTES:
3. Received Broken/ Leaking (Improperly Sealed) Y N NOTES:
4. Properly Preserved NOTES: Y N
5. Received Within Holding Times Y N NOTES:

COC Tape Was: 1. Present on Outer Package Y N
2. Unbroken on Outer Package Y N
3. Present on Sample Y N
4. Unbroken on Sample NOTES: Y N

COC Record Was: 1. Present upon Receipt of Samples Y N

Discrepancies Between Sample Labels and COC Record? Y N NOTES:

WHITE - Lab Copy YELLOW - Sampler Copy PINK - Generator Copy

Apr-18-03 11:22A Ved G. Kukreja, Ph.D. P.03

LATEST BIENNIAL INSPECTION REPORT

Inspection Date: 5/30/2013 RC: 33 BIN: 1093540

Bridge Ratings

Carried: I690EB-I481NBRAMP Crossed: 690I 690I33013016 CheckValue: 1,819,672,191

Inspection Agency: 10 - NYSDOT Type of Inspection: 1 - BIENNIAL
GTMS: 302 -- Steel - Stringer/Multi-Beam or Girder
POSTINGS: See Gen Rec Page 1 for Postings at time of inspection.
Further Investigation Needed: No
State Highway Number: 70-7 Milepoint: 0.39 AADT/Yr: 10216 / 1999
Orientation: 2 - Northeast Political Unit: 0233 - Town of DEWITT Year Built: 1972
Total Spans: 1 Ramp Bridge Attached To Span: NA BIN: NA
General Recommendation: 5 Computed Condition Rating: 4.906

Abutment Ratings:	**Beg Abut**	**End Abut**
Joint with Deck	3	8
Bearings, Bolts, Pads	5	4
Seats and Pedestals	6	6
Backwall	5	5
Stem (Breastwall)	5	5
Erosion or Scour	5	5
Footings	9	9
Piles	8	8
Recommendation	5	5

Wingwall Ratings:	**Beg Abut**	**End Abut**
Walls	5	4
Footings	9	9
Erosion or Scour	5	6
Piles	8	9

Channel Ratings:	**Channel**
Stream Alignment	8
Erosion and Scour	8
Waterway Opening	8
Bank Protection	8

Approach Ratings:	**Approaches**
Drainage	5
Embankment	5
Settlement	5
Erosion	4
Pavement	4
Guide Railing	4

Number of Flags Issued:

RED: 0 Yellow: 0 Safety: 0

Vulnerability Reviews Recommended: 1=Yes, 2=No, 3=NA, X=NotActive

Hydraulic: 3	Overload: X	Steel: 2
Collision: 2	Concrete: X	Seismic: X

Inspector's Signature: CheckValue: 1,819,672,191 Date: 5/30/2013

Peter Riehlman,PE () (Inspector ID:3000052)

Signed copy of this inspection report is available in the appropriate NYSDOT Regional Office

Reviewed By: Date: 6/27/2013

James R. Manning,PE () (QC ID:3000023)

Signed copy of this inspection report is available in the appropriate NYSDOT Regional Office

Inspection Date: 5/30/2013 RC: 33 BIN: 1093540

Span Ratings

Carried: I690EB-I481NBRAMP Crossed: 690I 690I33013016 CheckValue: 1,819,672,191

Deck Element Ratings:	**001**
Wearing Surface	5
Curbs	5
Sidewalks, Fascias	5
Railings, Parapets	5
Scuppers	8
Gratings	8
Median	8
Mono Deck Surface	5

Superstructure Ratings:	**001**
Structural Deck	4
Primary Members	6
Secondary Members	6
Paint	4
Joints	8
Recommendation	5

Pier Ratings:	**001**
Bearings, Bolts, Pads	8
Pedestals	8
Top of Cap or Beam	8
Stem Solid Pier	8
Cap Beam	8
Pier Columns	8
Footings	8
Erosion or Scour	8
Piles	8
Recommendation	8

Utility Ratings:	**001**
Lighting	8
Sign Structure	8
Utilities and Support	8

Field Notes:

Field Date	Arrival	Departure	Temp (C)	Temp (F)	Weather Conditions
5/3/2013	9:00:00 AM	11:45:00 AM		60	sunny
5/30/2013	10:00:00 AM	11:00:00 AM		80	ptly. cldy.

Inspection Date: 5/30/2013 RC: 33 BIN: 1093540

Inspection Notes

Carried: I690EB-I481NBRAMP Crossed: 690I 690I33013016 CheckValue: 1,819,672,191

Note ID: 331310935400002

Beg Abut -- Abutment: Joint with Deck -- Rated 3, Was 3
Referenced Photos: "11"
2013 - The begin joint headers, are spalled and cracked. There are several areas of sealer that have holes through. The asphalt next to the concrete header has "pulled away" or spalled away from the header, creating a gap. The end right half of pavement joint header is surface spalling away.

Note ID: 331310935400000

Approaches: Drainage -- Rated 5, Was 5
Referenced Photos: "9"
2013- Right side beginning and end approaches have vegetation and sand buildup along the curbs preventing proper drainage from off the bridge.

Note ID: 331310935400009

Approaches: Erosion -- Rated 4, Was 4
Referenced Photos: "2"
2013 - The end left has an erosion gully at the end of the previously placed stone approx. 10' wide by 4' deep.

Note ID: 331310935400006

Approaches: Pavement -- Rated 4, Was 4
Referenced Photos: "3"
2013 - The begin joint headers, on the right half, are spalled and cracked. There are several areas of sealer that have holes through. The asphalt next to the concrete header has "pulled away" or spalled away from the header, creating a gap. The end right half of pavement joint header is surface spalling away.

Note ID: 331310935400005

Approaches: Guide Railing -- Rated 4, Was 4
Referenced Photos: "4", "5"
2013 - The end right approach guiderail has 9 posts that are bent and broken away from the top box rail. The top rail is disconnected for 40 feet.

Note ID: 331310935400007

Span 001 -- Superstructure: Structural Deck -- Rated 4, Was 4
Referenced Photos: "6", "15", "19", "20"
2013 - The deck is hairline mapcracked throughout, but there are delaminations and hollow areas in bay 1, begin and end. The areas of delaminations are not over traffic or pedestrians and therefore not safety flagged.

Inspection Date: 5/30/2013 RC: 33 BIN: 1093540

Inspection Notes

Carried: I690EB-I481NBRAMP Crossed: 690I 690I33013016 CheckValue: 1,819,672,191

Note ID: 331310935400008

Span 001 -- Superstructure: Paint -- Rated 4, Was 4
Referenced Photos: "7", "8", "21"
2013- The paint has failed mainly along the lower flanges and fascia girders. Approx. paint failure to be 15% of structure.

Note ID: 331310935400003

End Abut -- Abutment: Bearings, Bolts, Pads -- Rated 4, Was 4
Referenced Photos: "12"
2013 - The end fascia bearings are pack rusted, but anchor bolts are solid at this time.

Note ID: 331310935400004

End Abut -- Wingwalls: Walls -- Rated 4, Was 4
Referenced Photos: "1"
2013 - The top of the wingwall (or approach fascia) is spalling at the pavement joint approx. 1' wide by 1.5' high by 5" deep exposing rebar.

Inspection Date: 5/30/2013 RC: 33 BIN: 1093540

Inspection Photos in Photo Number Order

Carried: I690EB-I481NBRAMP Crossed: 690I 690I33013016 CheckValue: 1,819,672,191

End Lt WW



Photo Number: 1 Photo Filename: DSCN0264.jpg

End Lt appr erosion



Photo Number: 2 Photo Filename: DSCN0266.jpg

Inspection Date: 5/30/2013 RC: 33 BIN: 1093540

Inspection Photos in Photo Number Order

Carried: I690EB-I481NBRAMP Crossed: 690I 690I33013016 CheckValue: 1,819,672,191

End appr looking toward Beg



Photo Number: 3 Photo Filename: DSCN0262.jpg

End Rt Appr GR



Photo Number: 4 Photo Filename: DSCN0260.jpg

Inspection Date: 5/30/2013 RC: 33 BIN: 1093540

Inspection Photos in Photo Number Order

Carried: I690EB-I481NBRAMP Crossed: 690I 690I33013016 CheckValue: 1,819,672,191

End Rt Appr GR



Photo Number: 5 - Photo Filename: DSCN0265.jpg

End Bay 1 deck



Photo Number: 6 Photo Filename: DSCN0256.jpg

Inspection Date: 5/30/2013 RC: 33 BIN: 1093540

Inspection Photos in Photo Number Order

Carried: I690EB-I481NBRAMP Crossed: 690I 690I33013016 CheckValue: 1,819,672,191

End Rt fascia girder paint looking toward Beg



Photo Number: 7 Photo Filename: DSCN0259.jpg

Location: framing looking toward Beg



Photo Number: 8 Photo Filename: DSCN0258.jpg

Inspection Date: 5/30/2013 RC: 33 BIN: 1093540

Inspection Photos in Photo Number Order

Carried: I690EB-I481NBRAMP Crossed: 690I 690I33013016 CheckValue: 1,819,672,191

End Rt appr drainage along curb



Photo Number: 9 Photo Filename: DSCN0261.jpg

Rt sand berm along curb looking toward Beg



Photo Number: 10 Photo Filename: DSCN0263.jpg

Inspection Date: 5/30/2013 RC: 33 BIN: 1093540

Inspection Photos in Photo Number Order

Carried: I690EB-I481NBRAMP Crossed: 690I 690I33013016 CheckValue: 1,819,672,191

Beg Rt joint



Photo Number: 11 Photo Filename: DSCN0536.jpg

End Brg #1



Photo Number: 12 Photo Filename: DSCN0545.jpg

Inspection Date: 5/30/2013 RC: 33 BIN: 1093540

Inspection Photos in Photo Number Order

Carried: I690EB-I481NBRAMP Crossed: 690I 690I33013016 CheckValue: 1,819,672,191

Beg Lt stem



Photo Number: 13 Photo Filename: DSCN0533.jpg

Beg Lt backwall



Photo Number: 14 Photo Filename: DSCN0534.jpg

Inspection Date: 5/30/2013 RC: 33 BIN: 1093540

Inspection Photos in Photo Number Order

Carried: I690EB-I481NBRAMP Crossed: 690I 690I33013016 CheckValue: 1,819,672,191

Location:
Beg Bay 4 deck

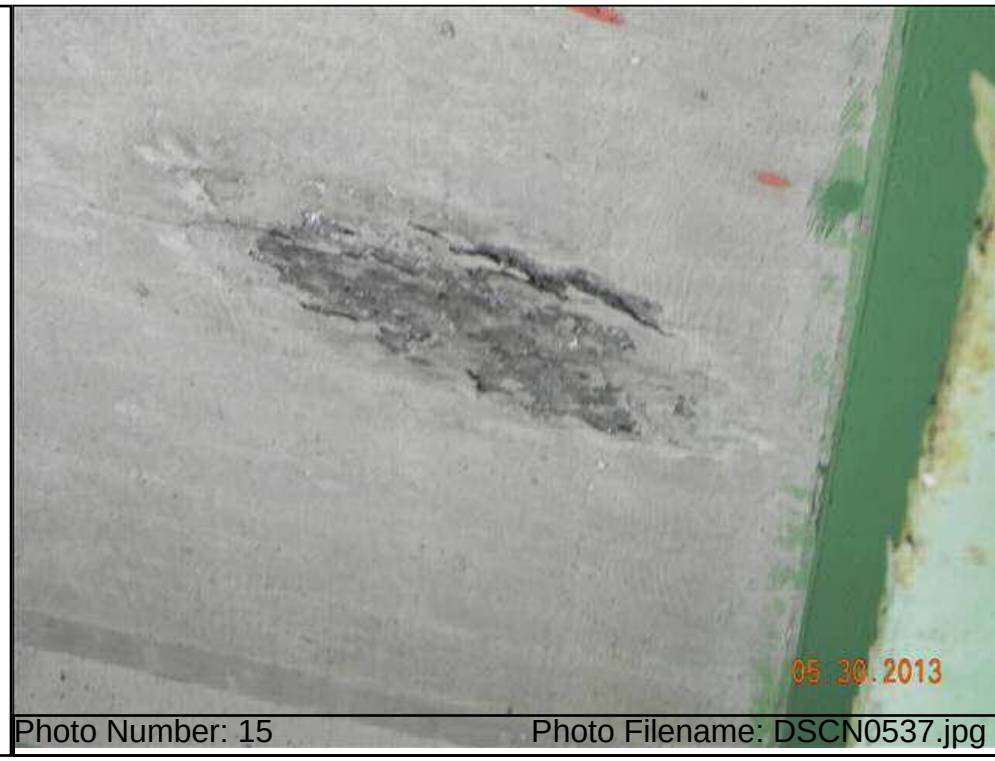

Photo Number: 15 Photo Filename: DSCN0537.jpg

End Lt fascia



Photo Number: 16 Photo Filename: DSCN0539.jpg

Inspection Date: 5/30/2013 RC: 33 BIN: 1093540

Inspection Photos in Photo Number Order

Carried: I690EB-I481NBRAMP Crossed: 690I 690I33013016 CheckValue: 1,819,672,191

End Lt backwall



Photo Number: 17 Photo Filename: DSCN0540.jpg

Beg Brg #1



Photo Number: 18 Photo Filename: DSCN0538.jpg

Inspection Date: 5/30/2013 RC: 33 BIN: 1093540

Inspection Photos in Photo Number Order

Carried: I690EB-I481NBRAMP Crossed: 690I 690I33013016 CheckValue: 1,819,672,191

Location:
End Bay 4 deck



Photo Number: 19 Photo Filename: DSCN0544.jpg

Location:
End Bay 1 deck

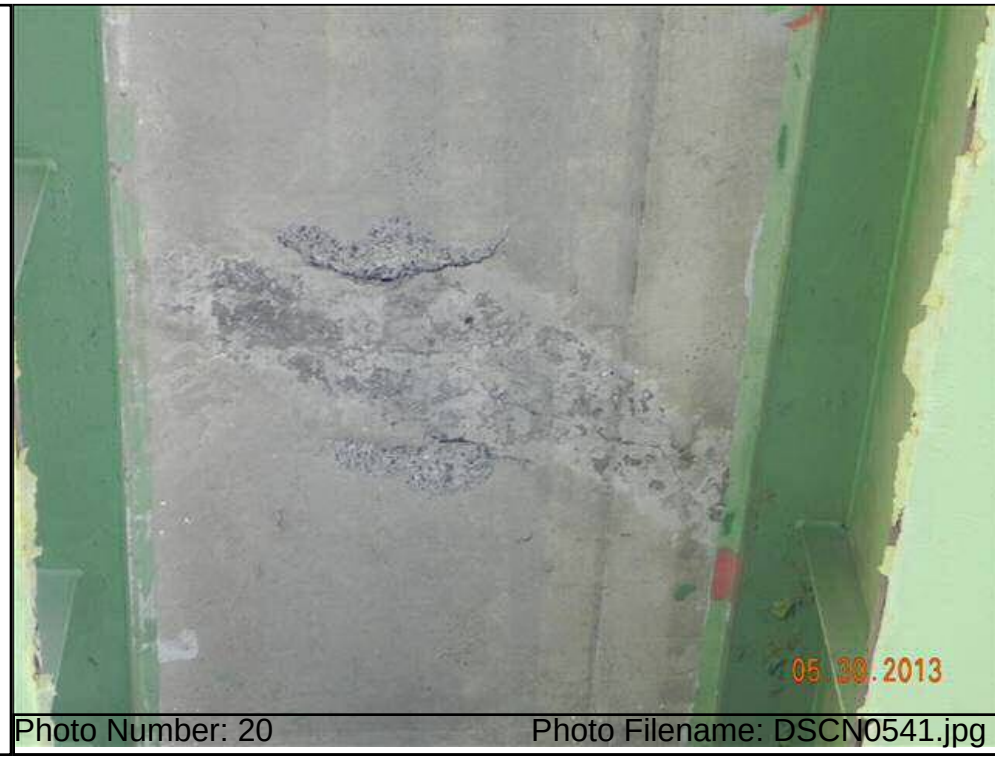

Photo Number: 20 Photo Filename: DSCN0541.jpg

Inspection Date: 5/30/2013 RC: 33 BIN: 1093540

Inspection Photos in Photo Number Order

Carried: I690EB-I481NBRAMP Crossed: 690I 690I33013016 CheckValue: 1,819,672,191

Location:
End Rt 2 girders (paint) looking Rt



Photo Number: 21 Photo Filename: DSCN0542.jpg

No Photo

Inspection Date: 5/30/2013 RC: 33 BIN: 1093540

Inspection Sketches in Sketch SysID Order

Carried: I690EB-I481NBRAMP Crossed: 690I 690I33013016 CheckValue: 1,819,672,191

Sketch ID: 331310935400001 Sketch Filename: LdRatNCL.13

General Sketch for Bridge
Referenced Photos:

Region 3 LoadRatingFieldCheckForm

NYSDOT BRIDGE INSPECTION REPORT			
SHEET	1	OF	1

LOAD RATING FIELD CHECK FORM

BIN:	1093540	Insp. Date:	05/07/2013

Dead Load - Note Changes since Last load Rating or state "NONE":

NONE

Section Loss -Note Changes since Last load Rating or state "NONE":

NONE

Additional Notes:

NONE

Attachments:

Team Leader: Peter Riehlman

Inspection Date: 5/30/2013 RC: 33 BIN: 1093540

Inspection Sketches in Sketch SysID Order

Carried: I690EB-I481NBRAMP Crossed: 690I 690I33013016 CheckValue: 1,819,672,191

Sketch ID: 331310935400003 Sketch Filename: deck sketch.tif

Span 001 -- Superstructure: Structural Deck -- Rated 4, Was 4
Referenced Photos: "6", "15", "19", "20"

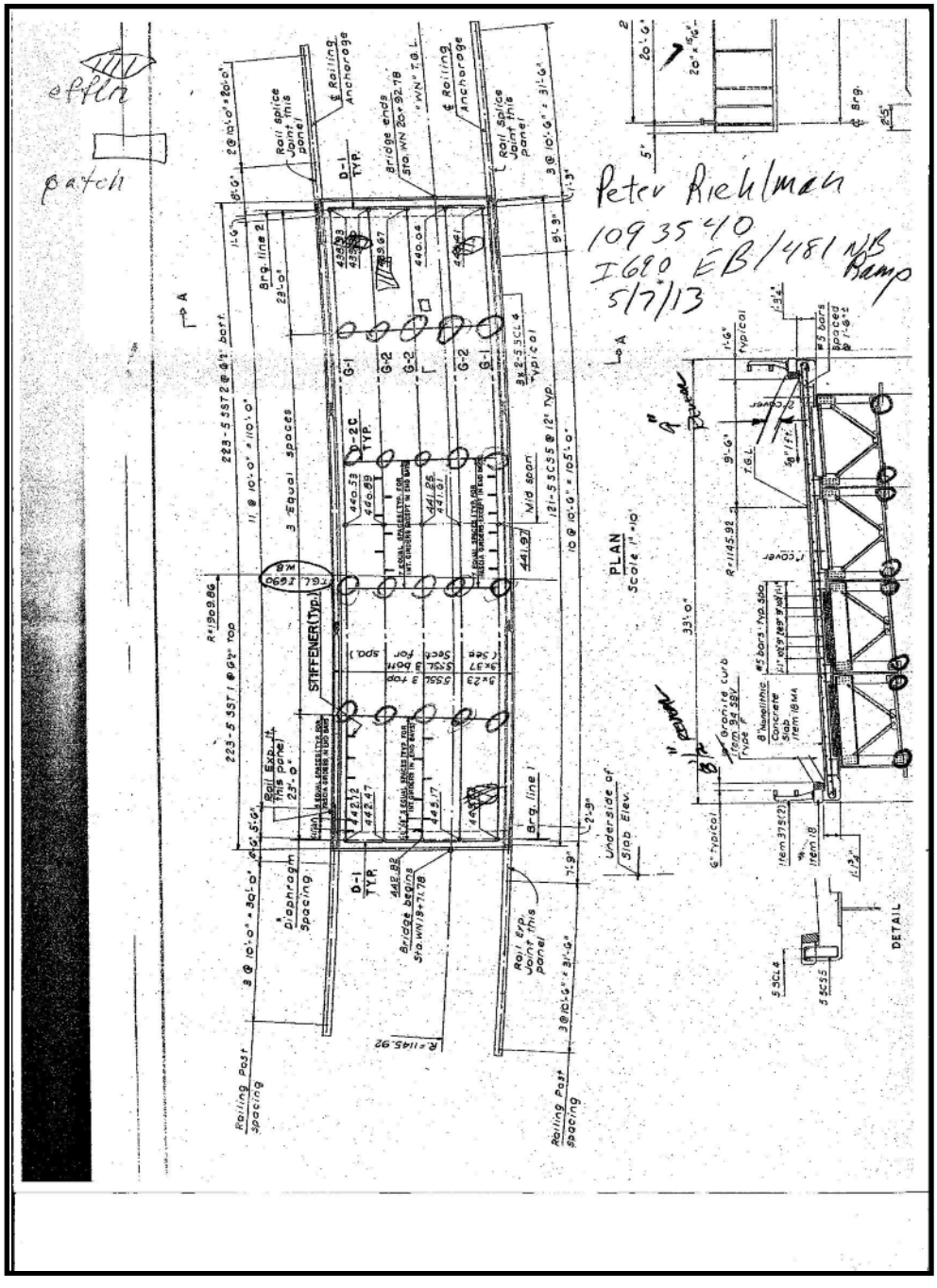

Inspection Date: 5/30/2013 RC: 33 BIN: 1093540

Gen. Rec., Postings, Federal Ratings, etc.

Carried: I690EB-I481NBRAMP Crossed: 690I 690I33013016 CheckValue: 1,819,672,191

Overall Condition:

GENERAL RECOMMENDATION: 5

Computed Condition Rating: 4.906

Problems Requiring Action:

NO Further Investigation Needed

NO Flags Issued

POSTINGS:

Inspector Confirmed existing Posting data as correct.
Posted Vertical Clearance ON the bridge is: No Posting
Posted Vertical Clearance UNDER the bridge is: No Posting
No Load Restriction is posted on this bridge

Overloads Observed:

NO Overload Vehicles were observed on this bridge

FEDERAL RATINGS:

NBI Deck Condition: 4
NBI Superstruct Condition: 6
NBI Substruct Condition: 6
NBI Channel Condition: N
NBI Culvert Condition: N

Diving Inspection Needs:

Diving Inspection Required? No Date of Last Diving Inspection: No Date

Inventory Problems:

Inventory Problems Exist? No

Miscellaneous:

Time Required to Inspect Bridge: 4 Hours

Lane Closure Needs: By Contract for 2 Hours

No Railroad Flagging Required

No Pedestrian Fence

There is a Snow Fence present

The BIN Plate is in OK condition

Inspection Date: 5/30/2013 RC: 33 BIN: 1093540

Gen. Rec., Postings, Federal Ratings, etc.

Carried: I690EB-I481NBRAMP Crossed: 690I 690I33013016 CheckValue: 1,819,672,191

Special Emphasis Inspection Required:

Non-Redundant/Fracture Critical Members - No
Pin and Hangers - No
Fatigue-Prone Welds - Yes
Non-Categorized Fatigue-Prone Details - No
Other (Specified in Text) - No

Special Emphasis Details:

Gusset plate welds - 100% hands-on inspection performed no exemption due to curved girders.

General Notes To the Next Inspector:

Bin plate on the end abutment.

Improvements Observed:

Inspection Date: 5/30/2013 RC: 33 BIN: 1093540

Review Progress and Personnel Present at Inspection

Carried: I690EB-I481NBRAMP Crossed: 690I 690I33013016 CheckValue: 1,819,672,191

Inspection Submission Status:

Submitted to QC Engineer on: 6/4/2013
QC Submission Number: 353306

QC Review Completed: 6/27/2013
QC Engineer: James R. Manning

Submitted to Liaison Engineer on: 7/10/2013
Liaison Submission Number: 53314

Liaison Review Completed: 7/11/2013
Liaison Engineer: TODD M. HERMANN

Submitted for BIIS Processing on: 7/11/2013
BIIS Submission Number: .kp1

Current Status: Keypunched, Sent to BIIS
Check Value: 1,819,672,191

Personnel Present During Inspection:

Peter Riehlman - Team Leader
Rebecca Maurer - Assistant Team Leader
Charlie Miller - lane closure
Anthony Nordland - lane closure
Paul Russell - lane closure

Inspection Date: 5/30/2013 RC: 33 BIN: 1093540

Inspection Access Requirements

Carried: I690EB-I481NBRAMP Crossed: 690I 690I33013016 CheckValue: 1,819,672,191

Equipment Required for Inspection

Access Requirement Changes WERE Noted During This Inspection.
This Listing is from the Inspection.

ACCESS CATEGORIES FOR ENTIRE BRIDGE
Required: Walking, Small Lift, Lane Closure, Shadow Vehicle

ACCESS CATEGORIES FOR SPAN 1
Required: Walking, Small Lift, Lane Closure, Shadow Vehicle

Inspection Date: 5/30/2013 RC: 33 BIN: 1093540

Culvert Measurements

Carried: I690EB-I481NBRAMP Crossed: 690I 690I33013016 CheckValue: 1,819,672,191

Culvert Measurements

NO CULVERT DATA FOR BIN 1093540

Standard Photos **RC: 33 BIN: 1093540**

Carried: I690EB-I481NBRAMP Crossed: 690I 690I33013016

1093540_LOCATION_MAP.JPG

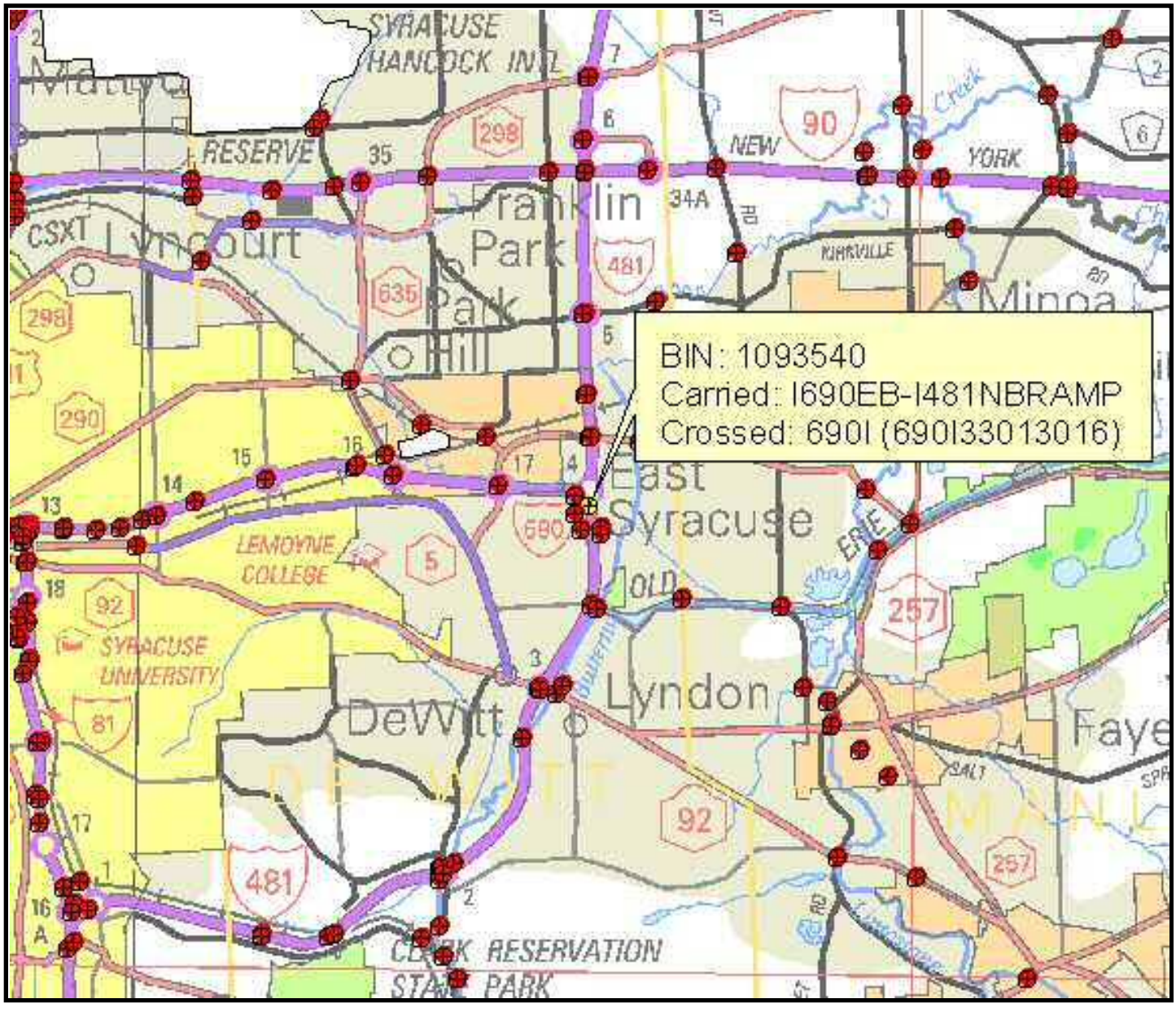

Standard Photos **RC: 33 BIN: 1093540**

Carried: I690EB-I481NBRAMP Crossed: 690I 690I33013016

1093540_QUAD_MAP.JPG

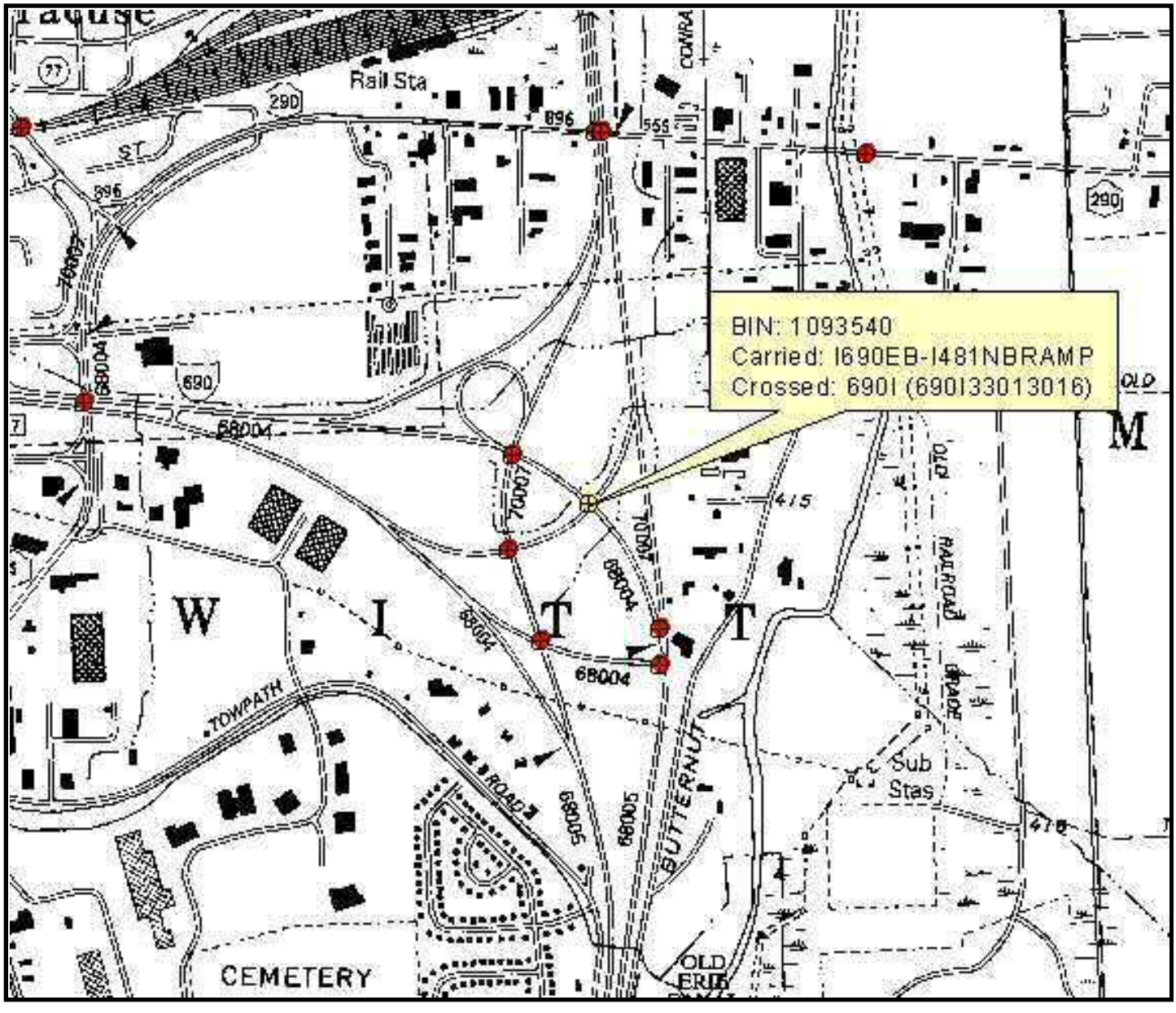

BeginAbutment11.jpg



Standard Photos **RC: 33 BIN: 1093540**

Carried: I690EB-I481NBRAMP Crossed: 690I 690I33013016

BeginApproach11.jpg



Standard Photos **RC: 33 BIN: 1093540**

Carried: I690EB-I481NBRAMP Crossed: 690I 690I33013016

EndApproach11.jpg



Standard Photos **RC: 33 BIN: 1093540**

Carried: I690EB-I481NBRAMP Crossed: 690I 690I33013016

EndRightWingwall11.jpg



Standard Photos **RC: 33 BIN: 1093540**

Carried: I690EB-I481NBRAMP Crossed: 690I 690I33013016

F2Left11.jpg



Standard Photos **RC: 33 BIN: 1093540**

Carried: I690EB-I481NBRAMP Crossed: 690I 690I33013016

F2Right11.jpg



Standard Photos **RC: 33 BIN: 1093540**

Carried: I690EB-I481NBRAMP Crossed: 690I 690I33013016

RightElevation11.jpg



Standard Photos **RC: 33 BIN: 1093540**

Carried: I690EB-I481NBRAMP Crossed: 690I 690I33013016

Underside11.jpg



LEVEL 1 LOAD RATING SUMMARY SHEET

Region/County Region 3/Onondaga BIN 1093540
Feature(s) Carried and Crossed I-690 EB to I-481 NB Ramp/ I-481 NB to I-690 WB Ramp
Date of field inspection upon which Level 1 rating is based 2/4/2014

OVERALL BRIDGE RATINGS (BASED ON LOWEST RATED ELEMENTS):

Total number of rating units 1

	H inventory	H operating	HS inventory	HS operating
Rating	H 32.04 (tons)	H 53.61 (tons)	HS 54.00 (tons)	HS 90.36 (tons)
Lowest rated element	Ext. G1- South	Ext. G1- South	Ext. G1- South	Ext. G1- South

Analysis method LFR Comments

Individual Rating Unit Level 1 values:

Rating unit span(s) 1

Main member ratings

	H inventory	H operating	HS inventory	HS operating
Rating	H (tons)	H (tons)	HS (tons)	HS (tons)
Lowest rated element				

Analysis method Comments

Floorbeam ratings

	H inventory	H operating	HS inventory	HS operating
Rating	H (tons)	H (tons)	HS (tons)	HS (tons)
Lowest rated element				

Analysis method Comments

Stringer ratings

	H inventory	H operating	HS inventory	HS operating
Rating	H 32.04 (tons)	H 53.61 (tons)	HS 54.00 (tons)	HS 90.36 (tons)
Lowest rated element	Ext. G1- South	Ext. G1- South	Ext. G1- South	Ext. G1- South

Analysis method LFR Comments

Certified by Date

Quality Control Engineer Signature Date
Agency or Company represented by certifier

Note:
-If connection ratings govern, record them under stringer ratings for stringer – floorbeam connection, floorbeam ratings for floorbeam-main member connections, etc.
-When Level 1 results indicated the need for load posting or other corrective action, the NYSDOT Regional Structures Engineer shall be notified immediately.
-Load ratings should be filed in the regional office within 60 days of completion of calculations.
-Bridges shall be flagged based on Level I results in accordance with the current NYSDOT flagging procedure.
-Bridge load posting, closure, etc. determinations shall be made as results are being produced.

PARSONS

100 Broadway
New York, NY 10005
Phone: 212-266-8300
Fax: 212-571-6825
www.parsons.com

TECHNICAL MEMORANDUM

FROM: Kian Siang Chau, P.E
NYSPE 082744

DATE: APRIL 3, 2014

RE: SEISMIC SCREENING SUMMARY
NEW YORK STATE DEPARTMENT OF TRANSPORTATION
D031085; PIN 3501.60; I-81

BIN: 1093540 (I-690 EB to I-481 NB Ramp / I-481 NB Ramp to I-690 WB)

This memorandum summarizes the seismic screening conducted for BIN 1093540 as part of the Interstate 81 Project in Syracuse, NY. The purpose of the screening is to determine if seismic retrofits are warranted at the superstructure to substructure connection, and if further seismic evaluation of the structure is required. This memorandum will give the screening results, retrofits required and recommendations for further seismic evaluation of the structure.

SCREENING PROCEDURE

The seismic screening was performed in accordance with the FHWA Seismic Retrofitting Manual for Highway Structures: Part 1 - Bridges, January 2006. As per the referenced manual, seismic screenings were performed for both lower level and upper level earthquake ground motion. The lower level earthquake ground motion has a reasonable likelihood of occurrence within the life of the bridge (50% probability of exceedance within a 75 year bridge life). The upper level earthquake ground motion has a finite likelihood of occurrence within the life of the bridge (7% probability of exceedance within a 75 year bridge life).

Values for the spectral acceleration for the Syracuse area used in the screening are as follows:

- Lower Level Earthquake Ground Motion for a Short Period (0.2 seconds): $S_S = 0.0251$
- Lower Level Earthquake Ground Motion for a Long Period (1.0 seconds): $S_1 = 0.0076$
- Upper Level Earthquake Ground Motion for a Short Period (0.2 seconds): $S_S = 0.139$
- Upper Level Earthquake Ground Motion for a Long Period (1.0 seconds): $S_1 = 0.047$

These values are considered constant and are the same for all seismic screenings of bridges in the Syracuse area.

The Site Class is based on the soil conditions at the bridge location. It was determined that this parameter has little effect on the results of the seismic screening because the spectral acceleration values for the Syracuse area are small. Based on this, a site class of D was used for all seismic screenings of bridges in the Syracuse area.

Bridge parameters used in the seismic screening were retrieved from the record drawings and WinBolts data.

The seismic screening takes into account the anticipated service life, importance, and the seismic exposure of the bridge to determine a seismic retrofit category (SRC). The SRC is then used to determine seismic evaluation methods and retrofit measures. There are four SRCs, A through D. Seismic retrofit category A is the lowest category; bridges in this category do not require retrofits or further seismic evaluation. Seismic retrofit category D is the highest category; bridges in this category requiring the most rigorous seismic evaluations and retrofits.

SCREENING RESULTS

The SRC for the bridge is "**C**" for lower level earthquake ground motion and "**B**" for upper level earthquake ground motion.

RETROFITS REQUIRED

No seismic retrofits are required for the bridge superstructure to substructure connection.

RECOMMENDATIONS FOR FURTHER SEISMIC EVALUATION

No further seismic evaluation is required for lower level earthquake ground motion. For the upper level earthquake ground motion, it is recommended that the capacities of the bearings are checked as per Section 5.2 of the referenced manual.

Retrofit cost estimates will be provided after any further required seismic evaluations are completed.

PARSONS

100 Broadway
New York, NY 10005
Phone: 212-266-8300
Fax: 212-571-6825
www.parsons.com

TECHNICAL MEMORANDUM

FROM: Kian Siang Chau, P.E
NYSPE 082744

DATE: JANUARY 26, 2015

RE: FATIGUE EVALUATION
NEW YORK STATE DEPARTMENT OF TRANSPORTATION
D031085; PIN 3501.60; I-81

BIN: 1093540 (I-690 Eastbound / I-481 Northbound)

This memorandum documents a fatigue evaluation conducted for the existing Interstate 81 Viaduct Project. Existing structures with AASHTO Category D, E, and E' fatigue-prone details require 100% hands-on inspection unless proven to be exempt. The purpose of the evaluation is to assess the remaining life of fatigue-prone components.

EVALUATION PROCEDURES

The fatigue evaluation was performed in accordance with the AASHTO Guide Specification for Fatigue Evaluations of Existing Steel Bridges, 1990. Fatigue-prone welds identified in the biennial inspection reports were located on record drawings and confirmed visually in the field. Additional information concerning fatigue-prone welds located in BIN folders was also obtained and reviewed prior to inspection.

EVALUATION RESULTS

The results of the fatigue evaluation of the existing bridge are shown below. The remaining safe fatigue life of the fatigue components has been **exhausted.**

Fatigue Detail Location	Remaining Safe Fatigue Life (Years)	Remaining Mean Fatigue Life (Years)
Interior Girders, Gusset plate welds	29.07	262.81
Exterior Girders, Gusset plate welds	-12.56	57.97

BRIDGE DECK EVALUATION REPORT

RECOMMENDATIONS

The bridge deck inspection findings and evaluation are used as a tool for developing the scope of work and cost estimates for the development and comparison of alternatives for the overall project.

The total damaged area of the deck is 0.9% of the top and 1.9% of the underside of the deck area. The core bit hit the reinforcement matt at a depth of 6 inches. The lab test indicates that chloride ion concentrations at one of the three sample locations of core C1 are significantly higher than the corrosion threshold for steel.

Due to the age, condition and high chloride ion content of the bridge deck concrete, the bridge deck should be rehabilitated or replaced to meet the current standards and to mitigate excessive future maintenance costs.

ALTERNATIVES

- Rehabilitation Alternative - 2 inches Bonded Concrete Overlay
  - Scope

    The scope of this alternative will include the complete removal of the bridge railings, curb and safety walks, and fascias to the level of the original top of the deck. The lower portion of the fascia or deck soffit is in better condition and only partial removal of damaged areas is necessary. The joint will be removed. The top 2 inches of the entire deck will be removed and areas of deteriorated concrete must be removed to at least 1 inch below the level of the reinforcement steel and to the horizontal and vertical limit of any detectable hollow areas. Damaged areas at the underside of the deck will require full depth reconstruction. Any corrosion of the reinforcement steel will be sandblasted or hydro-blasted. Reinforcement with significant section loss will be replaced. Partial and full depth removal areas will be reconstructed to adjacent grade. The proposed deck overlay will be a 2 inches thick bonded concrete overlay yielding a nominal 9.5 inches standard thickness deck. A new single-sloped concrete barrier and a new armorless joint will be installed. The Level 1 Load Rating for the final condition was found to be acceptable.

- Useful Life Expectancy

  The removal of the top 2 inches of the existing deck will remove the portion of the deck with high chloride ion concentrations. It can be anticipated that chloride ions will continue to migrate into the remaining deck to the reinforcing steel resulting in further corrosion-related deterioration of the deck surface. Concrete admixtures will be included in the bonded concrete overlay to impede the continued penetration of chloride into the deck from the surface. This alternative will result in an extended useful life expectancy estimated at 20 years.

The design life of the project is 30 years (ETC + 30). This alternative does not meet the project objectives of obtaining 30 years of service life and is not evaluated further.

- Rehabilitation Alternative – 100% Deep Removal and Partial Deck Reconstruction
  - Scope

    The scope of this alternative will include the complete removal of the bridge railings, curb and safety walks, and fascias to the level of the original top of the deck. The lower portion of the fascia or deck soffit is in better condition and only partial removal of damaged areas is necessary. The joint will be removed. The scope of this alternative will include partial depth reconstruction with removal of the concrete to at least 1 inch below the top mat of the reinforcement steel. Additionally, any further areas of deteriorated concrete detected will require full depth removal. Any corrosion of the reinforcement steel will be removed by sandblasting or hydro-blasting. The proposed deck partial reconstruction will be a nominal 6 inches thick concrete deck yielding a 9.5 inches standard thickness deck. A new single-sloped concrete barrier and a new armorless joint will be installed. The Level 1 Load Rating for the final condition was found to be acceptable.
  - Useful Life Expectancy

    This alternative will provide a useful life expectancy is estimated at 35 years.
  - Cost Estimate

    The estimated cost for this alternative is $420,000. The Engineer's Opinion of Probable Construction Cost worksheet is at the end of this section.

- Replacement Alternative – Cast-In-Place Concrete
  - Scope

    This scope of this alternative will include the complete demolition of the existing bridge deck, railings, curb and safety walks, fascias and bridge joint. The bridge deck will be replaced with a new 9.5 inches standard thickness concrete deck. A new single-sloped concrete barrier and a new armorless joint will be installed. The Level 1 Load Rating for the final condition was found to be acceptable.
  - Useful Life Expectancy

    This alternative will provide a useful life expectancy is estimated at 40+ years.
  - Cost Estimate

    The estimated cost for this alternative is $475,000. The Engineer's Opinion of Probable Construction Cost worksheet is at the end of this section.

- Replacement Alternative – Pre-cast Concrete Deck Panels
  - Scope

    The scope of this alternative is similar to the Cast-In-Place Concrete Deck Replacement Alternative except the deck structure will be precast panels. This alternative offers reduced construction time over conventional construction.
  - Useful Life Expectancy

    This alternative will provide a useful life expectancy is estimated at 40+ years.
  - Cost Estimate

    The comparison of accelerated construction to conventional construction is beyond the current scope of this evaluation.

IN-DEPTH INSPECTION REPORT

D031085 P.I.N. 3501.60

ELEMENT SPECIFIC BRIDGE WORK

B.I.N. 3/3 1093550

TEAM LEADER George H Stam, P.E. 056216
NYSPE LICENSE #

ASSISTANT TEAM LEADER Timothy Olmstead

FEATURE CARRIED I-481 Northbound

FEATURE CROSSED Connection to I-690 Westbound

DATE FIELD WORK BEGAN 2/6/14

DATE FIELD WORK COMPLETED 2/24/14

TABLE OF CONTENTS

- STRUCTURE IDENTIFICATION
- INTRODUCTION
- PROJECT LOCATION MAP
- IN DEPTH CONDITION DOCUMENTATION
- PLANS & SKETCHES
- IN DEPTH PHOTO DOCUMENTATION
- ASBESTOS SAMPLING SURVEY
- LATEST BIENNIAL INSPECTION REPORT
- STANDARD PHOTOS

STRUCTURE IDENTIFICATION

a. Bridge Identification Number (BIN): 3/3 1093550
b. Reference Marker: 481I 3301 2060
c. Region: NYSDOT Region 3
d. County: Onondaga
e. Town: Dewitt
f. Feature Carried: I-481 Northbound
g. Feature Crossed: Connection to I-690 Westbound

INTRODUCTION

a. Bridge History
   i. Year Built: 1972
   ii. Bridge Type: Single Span, Steel Multi-girder
   iii. Span Length: 150 feet
   iv. Out-to-Out Width: 43 feet
   v. Skew Angle: 51°
   vi. Structural Ratings and Rankings
      1. Federal Sufficiency: 79 (Apr. 2011)
      2. Condition Rating: 4.422 (Apr. 2011)
      3. General Recommendation: 5 (Apr. 2011)
   vii. Live Load Posting (HS25): No
   viii. National Highway System (NHS): Yes
   ix. Previous work Done:

1987 – Replace wearing surface (asphalt concrete overlay) with concrete overlay
1992 – Clean and paint metal surfaces
2004 – Remove end arm angles, repair exp. Bearings; abutment concrete repairs
2010 – Clean and paint metal surfaces
2013 – Deck replacement; bearing repairs; abutment repairs.

   x. Planned Future Work: N/A

b. Highway Classification

i. Functional Classification: Urban Principle Arterial - Interstate

ii. Traffic Volumes

YEAR	AADT
2014	25226
2034	37485
2054	55700

iii. Plan for Maintenance and Protection of Traffic:
Maintenance and protection of traffic will be achieved by staged construction.

PROJECT LOCATION MAP

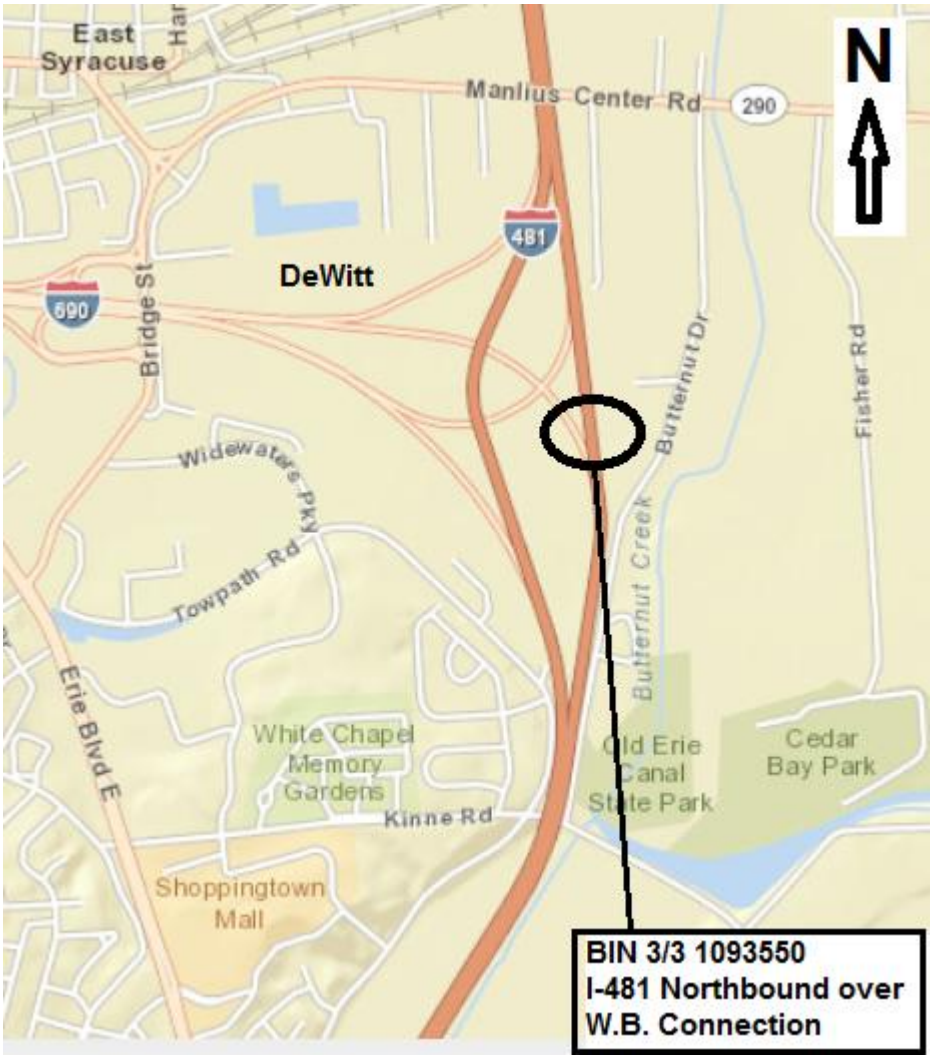

IN-DEPTH CONDITION DOCUMENTATION

NYS DEPT. OF TRANSPORTATION **SHEET: 1 OF 4**
BRIDGE INSPECTION REPORT **BIN: 1093550** **DATE: 2/6/2014 & 2/24/2014**

FEATURE CARRIED: I-481 NB **TEAM LEADER: G. STAM**
FEATURE CROSSED: CONNECTION to I690 WB **ASSIST. TEAM LEADER: T. OLMSTEAD**

ITEM	REMARKS	PHOTO NO.
	GENERAL NOTE The entire bridge deck was replaced in 2013 with a new concrete mono-deck. There is an expansion joint at the begin approach and no joint at the end approach. The deck element curbs, safety walks, railings, and fascias were replaced with concrete single slope parapets.	
	BEGIN ABUTMENT ITEMS	
TP 349-22	Begin Abutment - Joint with Deck: The begin bearings are expansion. The begin joint is armorless with elastomeric concrete headers and elastic material seal (Photo 1). The seal is debonded from the headers on approximately 50 percent of the length of the joint (Photo 2). The debonded seal allows runoff to leak down the backwall and onto the substructure elements below (Photo 3). There is leakage evident at the begin left backwall (Photo 4). Additionally, there is seepage through the construction joint mid-height of the backwall (Photo 5). The elastic material between the expansion joint of the right parapet is debonded from the sides with gaps up to 0.75 inch (Photo 6).	1,2,3,4 5,6
TP 349-24	Begin Abutment – Bearings: The begin bearings are expansion. All of the bearings appear to be functioning and are in there normally contracted position at 10 ºF. The right keeper plate at bearing B1 is bent outward slightly (Photo 7), however, the bearing is still in proper alignment. The right keeper plate at bearing G4 is similar, but not as severe. The left anchor bolt at bearing B1 is dull sounding when struck with a hammer and is likely sheared off (Photo 8).	7,8
TP 349-26	Begin Abutment - Seat and Pedestals: The seat is in good condition. The pedestals are in generally good conditions with the following deficiencies noted: • Pedestal P2 - cracked along the left side and top at the rear with 1 square foot of hollow sounding area (Photo 9). The crack extends along the top of the pedestal to the bearing plate near the left anchor bolt. The bolt sounds solid. • Pedestal P3 – cracked at the right side at the rear (Photo 10); and at the right side of the front face (Photo 11). • Pedestal P5 – cracked at the begin left side (Photo 12).	 9 10,11 12
TP 349-28	Begin Abutment – Backwall: The begin backwall is in good condition with no significant cracks or hollow sounding areas detected. There is leakage down the backwall in girder bays 2 and 3. Additionally, there is seepage through the construction joint mid-height of the backwall (Photo 5).	5
TP 349-30	Begin Abutment – Stem: The stem has scattered tight mapcracking throughout (Photo 13). Additionally, there are scattered hairline vertical cracks as illustrated on the Begin Abutment Deterioration Sketch (Photo 11).	11,13

ITEM	REMARKS	PHOTO NO.
	END ABUTMENT ITEMS	
TP 349-23	End Abutment - Joint with Deck: The end bearings are fixed. There is no joint at the end abutment.	20
TP 349-25	End Abutment – Bearings: The end bearings are fixed and in good condition. The left side anchor bolts of bearings B1, B3, & B6 are missing, however, they have been repaired with angles welded to the sides of the masonry plates and anchored to the pedestals (Photo 14).	14
TP 349-27	End Abutment - Seats and Pedestals: The seats and pedestals are in generally good condition. The begin right side of pedestal P2 is cracked with a 0.5 square foot area of hollow sounding concrete (Photo 15). There were no other no hollow areas or significant cracks detected.	15
TP 349-29	End Abutment – Backwall: The backwall is in good condition with no significant cracks or hollow areas detected.	
TP 349-31	End Abutment – Stem: The stem has scattered hairline vertical and mapcracking throughout as illustrated on the End Abutment Deterioration Sketch (Photo 16). There is an area of more defined mapcracking of the stem below pedestal 3 (Photo 17). The top edge of the right nose at the stem and right wingwall interface is cracked with surface spalls (Photo 18).	16,17,18
	APPROACH ITEMS	
TP 349-53	Approach Drainage: The bridge generally slopes from begin to end. The end right corner of the end approach slab is slightly higher than the end of the bridge. Runoff is trapped along the right side of the end approach and there is shallow ponding along the right parapet at the end of the bridge (Photo 19). There are no other significant drainage problems on the bridge.	19
TP 349-55	Approach Settlement: There is no settlement at either approach.	
TP 349-57	Approach Pavement: There are new concrete approach slabs. There is a 2.5 feet wide x 2 inch long patch along the begin edge of the end concrete approach slab in the right lane that is cracked and segmented (Photo 20). The asphalt at the transition from the end right concrete approach slab to the asphalt pavement is cracked with several potholes (Photo 21).	20,21
	DECK ITEMS	
TP 350-19	Deck - Wearing Surface: The ride quality of the deck is smooth. There is surface scaling of the deck longitudinal traction grooving in the center closure pour near mid-span (Photo 22).	22
TP 350-20	Deck - Curbs: There are no curbs on the bridge.	

ITEM	REMARKS	PHOTO NO.
TP 350-21	Deck - Sidewalks and Fascias: Sidewalks – There are no sidewalks or safety walks on the bridge. Fascias – There are new concrete single slope parapets on either side of the bridge (Photos 1 & 23).	1,23
	SUPERSTRUCTURE ITEMS	
TP 350-27	Structual Deck: There is a 8.5 inches thick concrete mono-deck. Stay in place forms were used in bays 1, 2, 4, & 5 and the underside of the deck is not visible in those bays (Photo 24). Wood forms were used in bay 3 and the deck is in good condition (Photo 25).	24,25
TP 350-28	Primary Members: The primary members are generally in good condition with no significant section loss noted, except at girder G2. Girder G2 has a 1.25 inch long x 3 inches high rust through hole above the bearing (Photos 26 & 27). The corrosion hole predates the recent painting of the superstructure and there is only minor active corrosion around the perimeter of the hole. There are bearing stiffeners on both sides of the girder located above the bearing. There is no evidence of any web crippling or other distortion of the primary member in the vicinity of the bearing.	26,27
TP 350-29	Secondary Members: The secondary members are in generally good condition. The horizontal diagonal bracing angle from girder G1 gusset plate 3 is bent (Photos 28). A similar condiition exists at girder G3 gusset plate 3. The bends appear to be from impacts that predate the recent painting. There are no tears or other distortions of these angles or the gusset plates noted.	28
TP 350-30	Paint: The paint system is in nearly new condition except for scattered scraps and gouges in the paint surface due to construction demolition of the previous deck (Photo 24 & 29).	24,29
	UTILITIES ITEMS	
TP 350-43	Lighting: None.	
TP 350-44	Sign Structure: None.	
TP 350-45	Utilities and Support: None visible.	

ITEM	REMARKS	PHOTO NO.
	SPECIAL EMPHASIS ITEMS Special Emphasis Inspection Required · Non-Redundant/Fracture Critical Members – No · Pin and Hangers – No · Fatigue-Prone Welds – Yes · Non-Categorized Fatigue-Prone Details – No · Other – No Special Emphasis Details · Lateral bracing gusset plate connections to all girders.	

PLANS & SKETCHES

BIN 1093556 F.I.S.H. 70-7

FED. RD. REG. NO.	STATE	FEDERAL PROJECT NO.	SHEET NO.	TOTAL SHEETS
I	NEW YORK	I-690-3(29) I-481-2(116)	158	305

INTERSTATE ROUTE CONNECTION 570
BUTTERNUT INTERCHANGE (PHASE 2)

ONONDAGA COUNTY

TEAM LEADER B Galka
FIELD VERIFIED ✓
DATE 11/87

P.T.R. 1989
P.T.R. 10/91

Galka 10/5/93
Dashe Hellen 9/16/95
Dashe Hellen 10/1/97
Dashe Hellen 11/2/99
12/11/01
B Galka 8/26/05
T Brazie 4/11/07
Brad Spalle 4/24/09

SYMBOLS:
- ✦ Indicates location of existing Settlement Platforms
  Sta NB 169+80±, 22' Rt & Lt
  Sta NB 172+80±, 22' Rt & Lt
- ◉ Indicates location of Borings

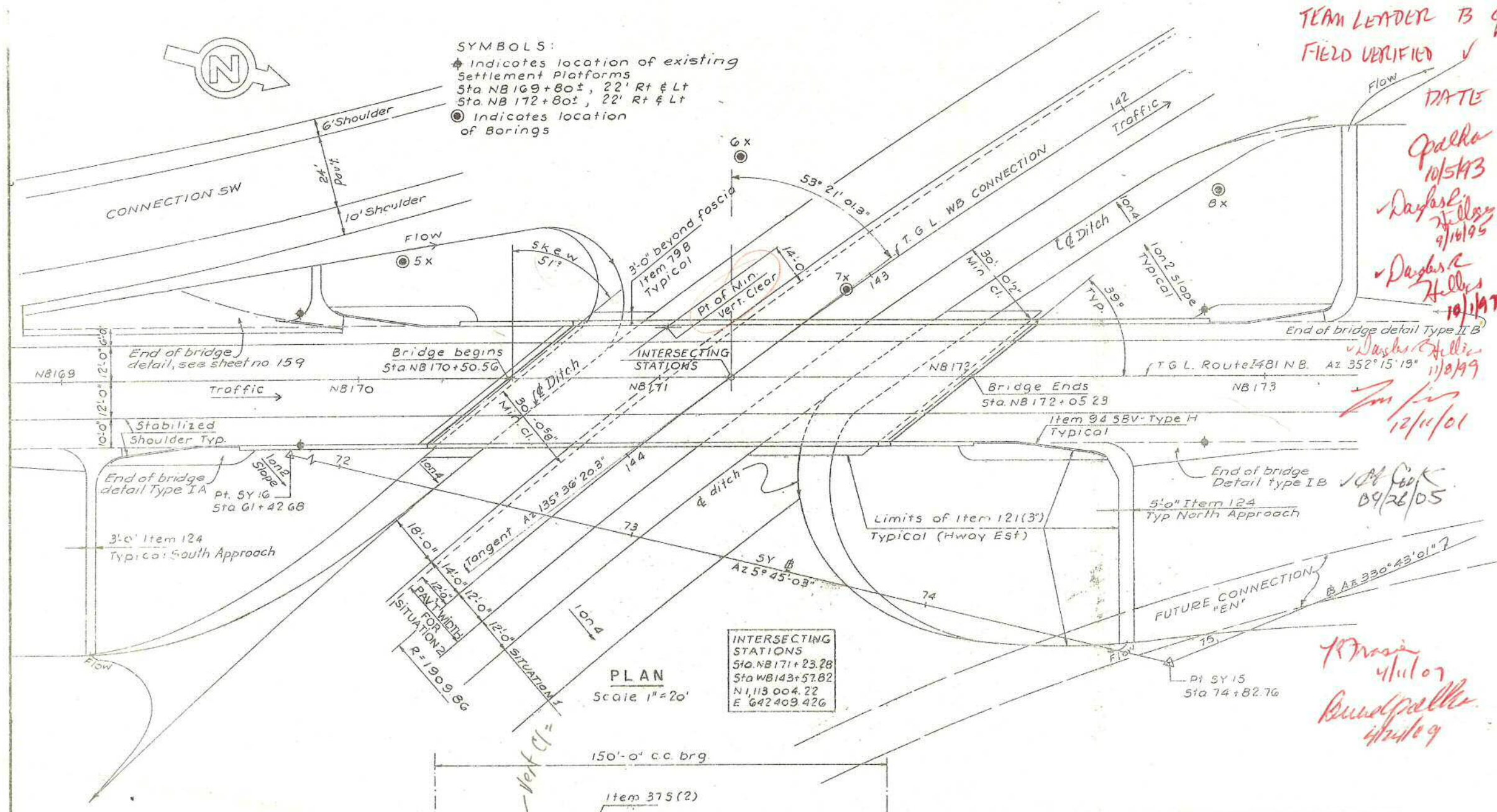

PLAN
Scale 1"=20'

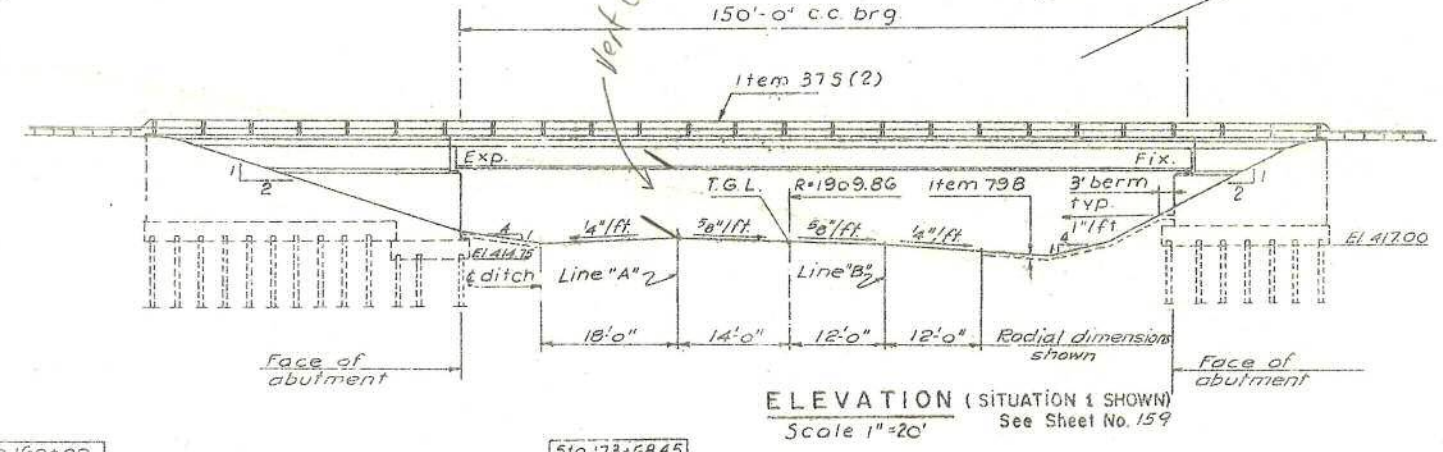

ELEVATION (SITUATION 1 SHOWN)
Scale 1"=20'
See Sheet No. 159

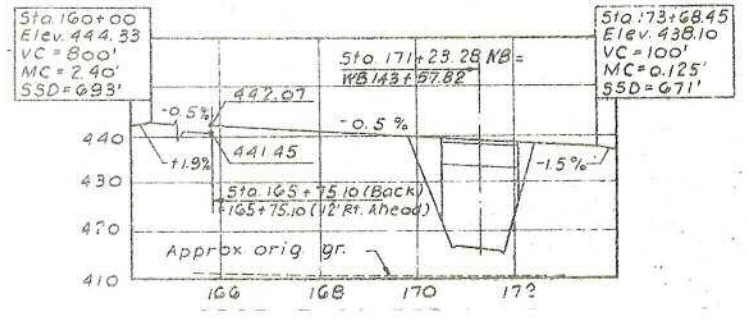

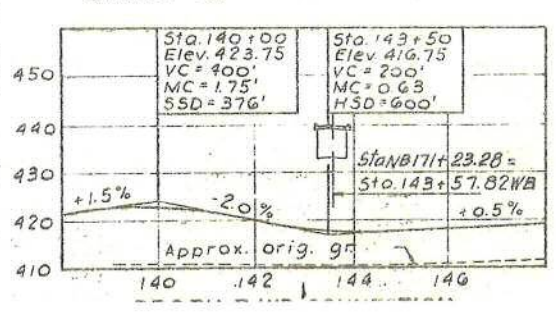

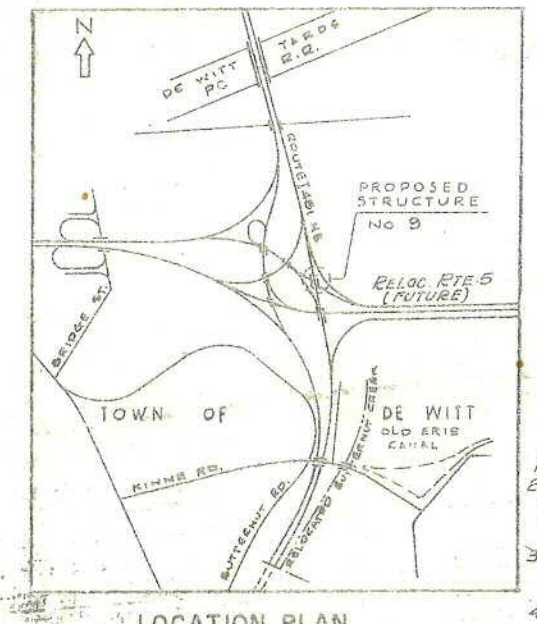

LOCATION PLAN

ESTIMATE OF QUANTITIES

ITEM	DESCRIPTION	UNIT	QUANTITIES NEAT	QUANTITIES PROP'L
1WPS	Watering Plants and Sod	M.Gal	2.8	4.0
2UF	Underdrain Filter	C.Y.	19	20
5B	Structure Excavation	C.Y.	1864	1865
11H-G	Perf. Corr. Metal Pipe Underdr. 6"dia.-18ga.	L.F.	309	310
18	Class A - Concrete for Structures	C.Y.	24	25
18MA	Cl A-Conc. for Struct. (Mono. Br Slab)	S.F.	6444	6445
20	Class B - Concrete for Structures	C.Y.	948	950
24A	Bagged Screened Aggregate	C.Y.	137	140
28	Bar Reinforcement for Structures	Lb.	83780	83780
28B	Stud Shear Connectors	Ea.	1812	1815
29	Structural Steel	Lb.	372710	372710
375(2)	Steel Bridge Railing (2 Rail)	L.F.	497	500
61	Bituminous Material	Gal.	198	200
79B	Concrete Block Paving	S.Y.	318	320
83S	Steel Sheet Piling	S.F.	248	250
83TXS	Temporary Sheet Piling	S.F.	5854	6855
84SB	Steel Bearing Test Piles	L.F.	340	340
85	Steel Bearing Piles	L.F.	8290	8290
85A	Splices for Steel Bearing Piles	Ea	35	35
87	Furnishing Equip. for Driving Piles	L.S.	NEC.	NEC.
94SBV	Stone Curb (Bridge types-Granite)	L.F.	658	660
124	Sodding	S.Y.	137	140
3G3I	Epoxy Protective Coating for Conc.	S.F.	2702	2705
13DE-G	Downspouts	L.F.	39	40
101B	Drainage Trough	L.F.	61	65

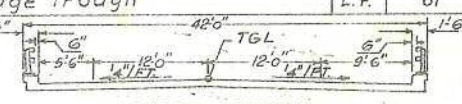

BRIDGE SECTION
Scale 1"=10'

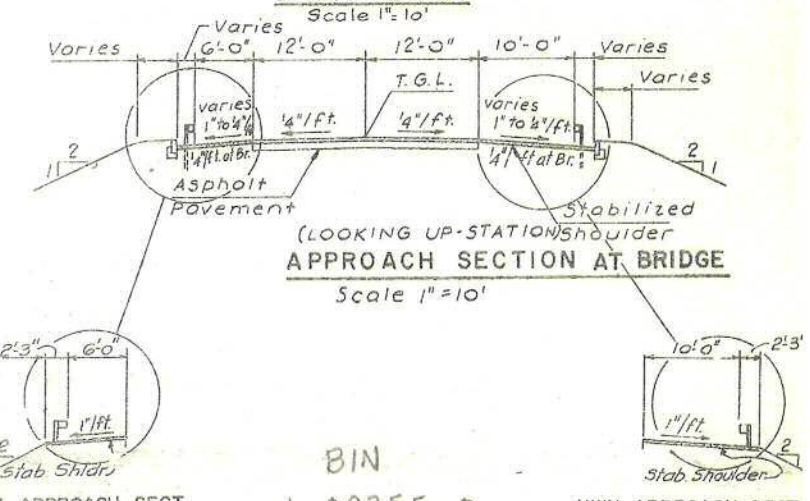

APPROACH SECTION AT BRIDGE
Scale 1"=10'

HWY APPROACH SECT.

BIN 1 09355 0

HWY APPROACH SECT.

Notes:
1. For General Notes see Sheet No. 124
2. For design purposes the pile load does not exceed 56 tons per pile
   Estimated length: North Abut. = 75 ft.
   South Abut. = 75 ft.
3. Ordered length of Test Piles:
   North Abut. 85 ft.
   South Abut. 85 ft.
4. The structural slab on this structure shall be formed with removable forms.

BUTTERNUT INTERCHANGE
F.A.I. 690 & F.A.I. 481

BRIDGE No. 9
ROUTE I481 N.B. over WB CONNECTION
GENERAL PLAN - SHEET No. 1

DRAWING NO.	SCALE	DATE	SHEET NO.
7504-02	AS Shown	8/5/70	158

F.I.S.H. 70-7

FED. RD. REG. NO.	STATE	FEDERAL PROJECT AID NO.	SHEET NO.
1	NEW YORK	I-690-3(28) ~~I-481-2(16)~~	161

INTERSTATE ROUTE CONNECTION 570
BUTTERNUT INTERCHANGE (PHASE 2)

ONONDAGA COUNTY

I Vertical
I Batter 1 on 4
I Batter 1 on 3

PILE PLAN
Scale $\frac{3}{32}$"=1'0"

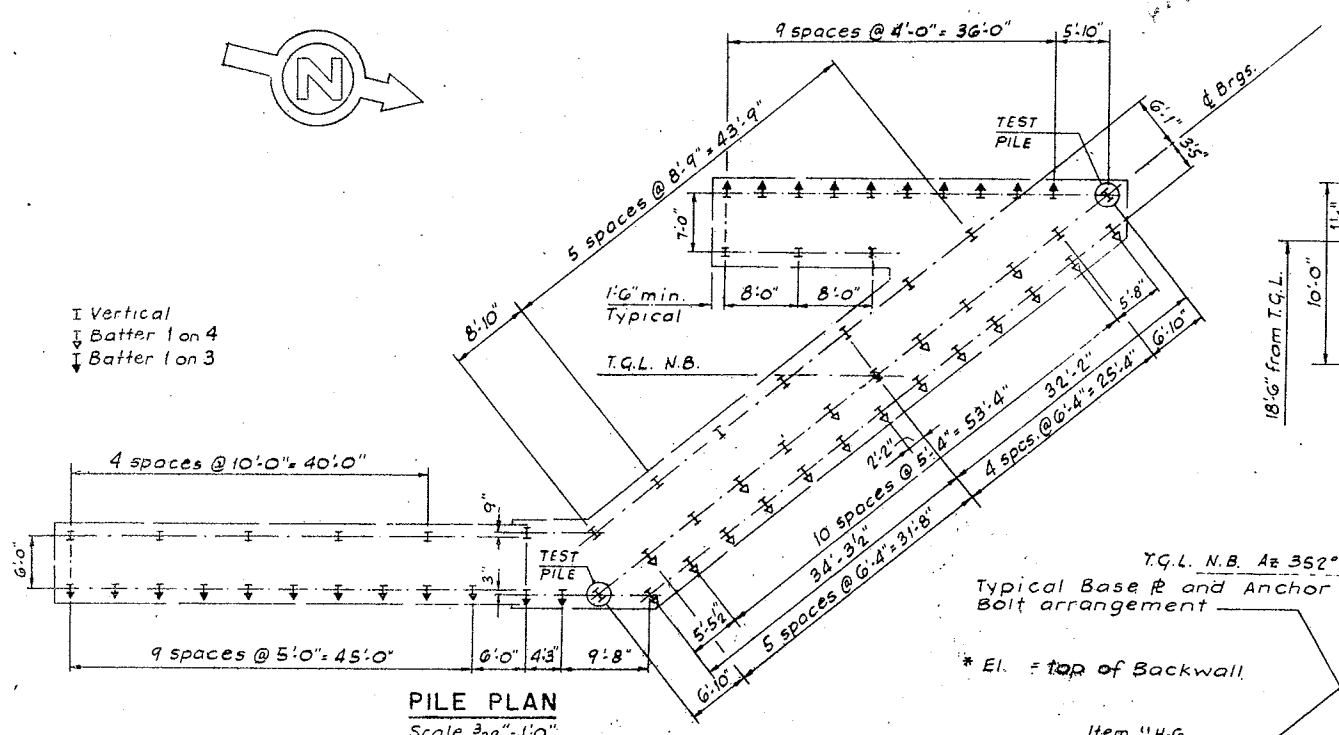

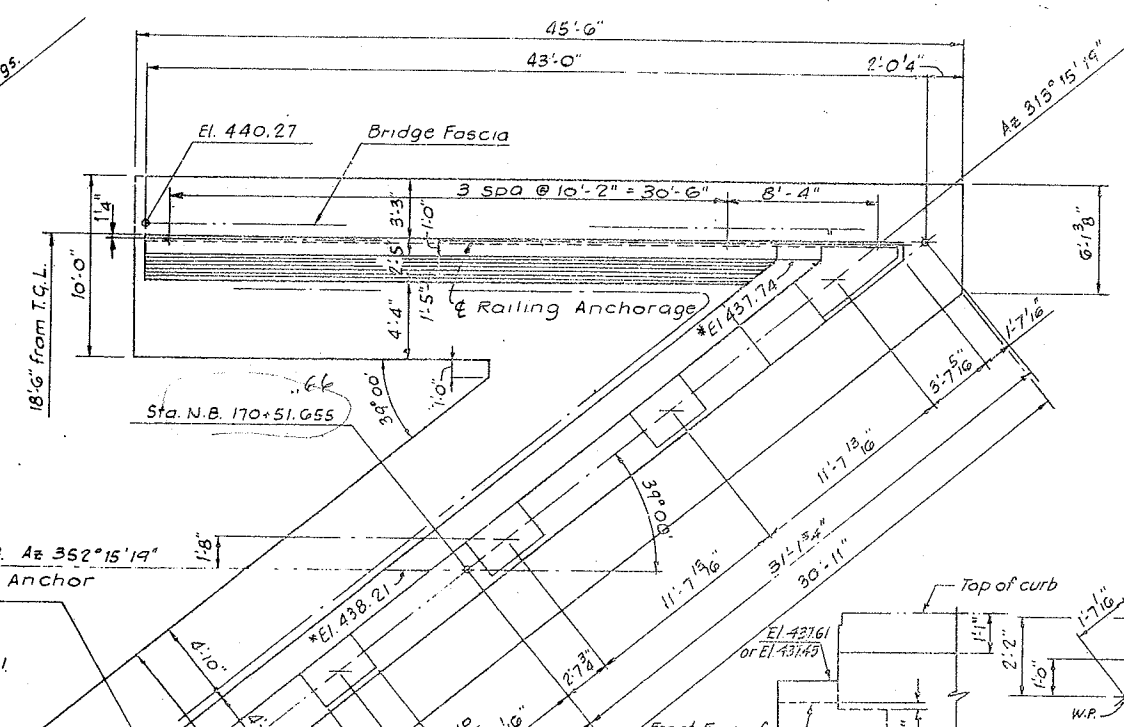

SECTION A-A (shown)
SECTION B-B (opposite hand)

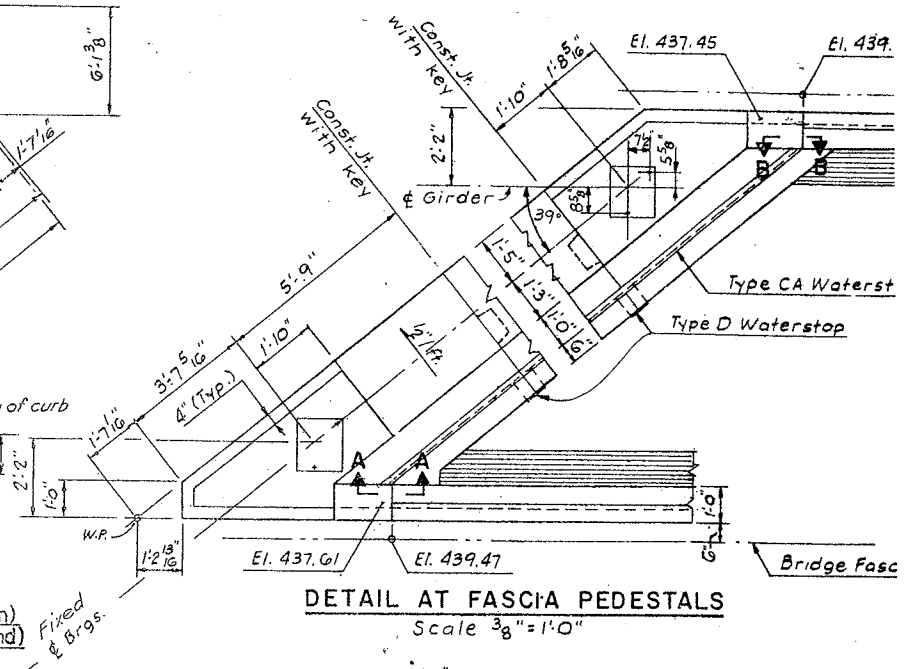

DETAIL AT FASCIA PEDESTALS
Scale $\frac{3}{8}$"=1'0"

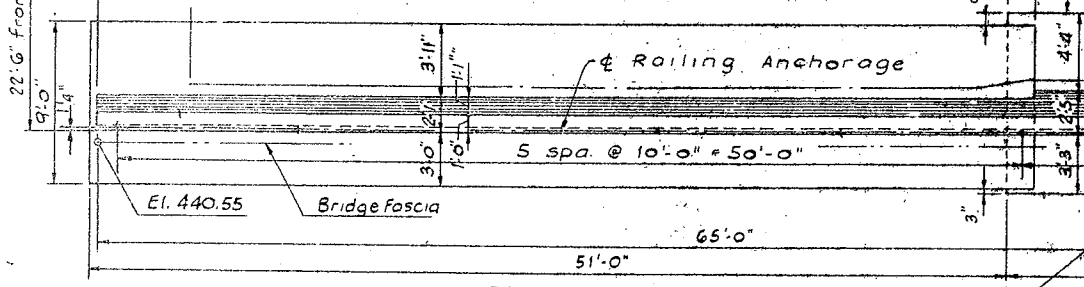

PLAN - SOUTH ABUTMENT
Scale $\frac{3}{16}$"=1'0"

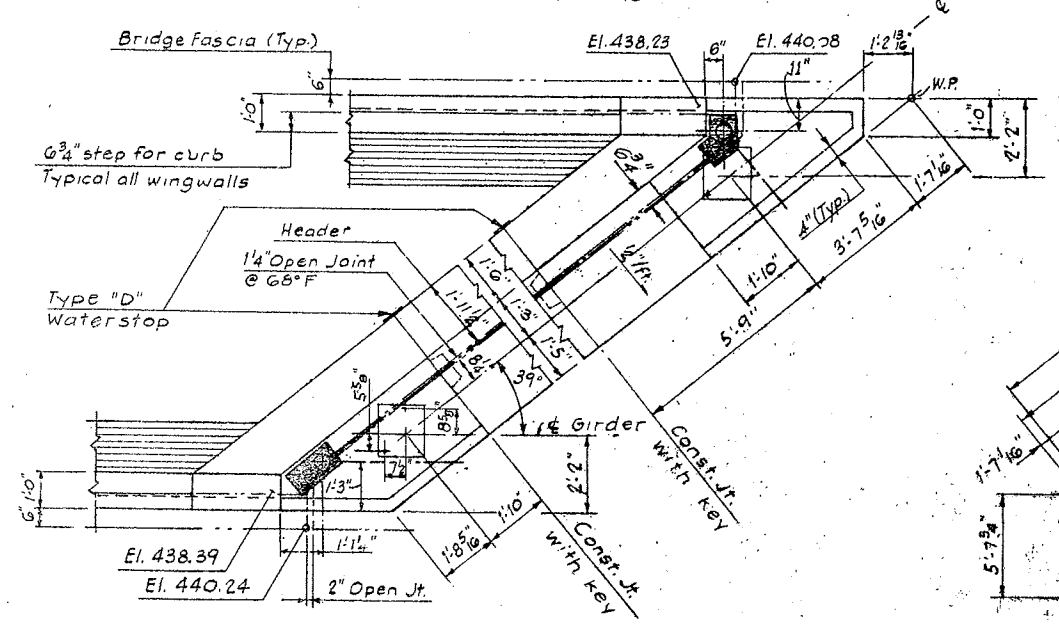

DETAIL AT FASCIA PEDESTALS
Scale $\frac{3}{8}$"=1'0"

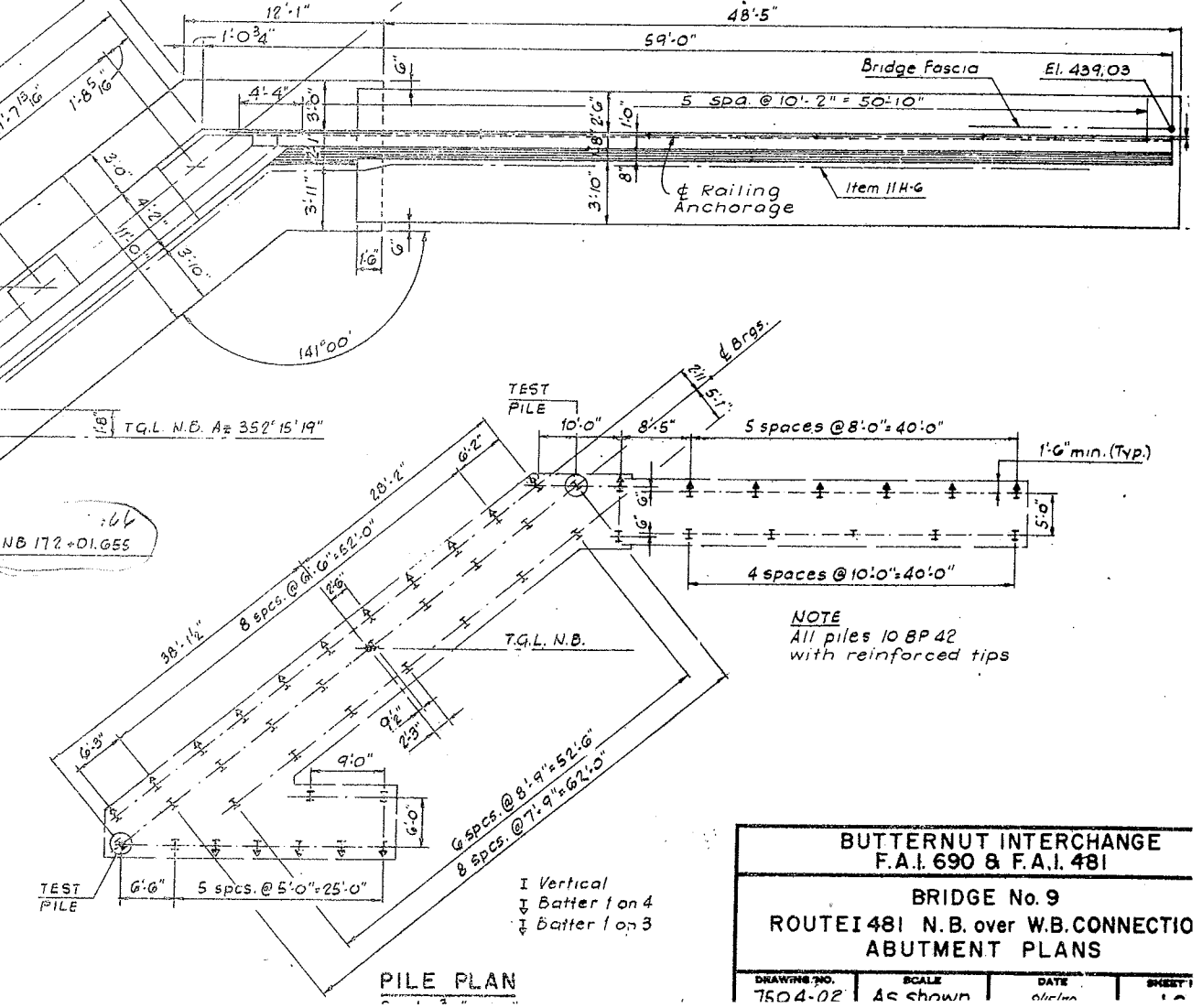

NOTE
All piles 10 BP 42 with reinforced tips

I Vertical
I Batter 1 on 4
I Batter 1 on 3

PILE PLAN

PLAN - NORTH ABUTMENT
Scale $\frac{3}{16}$"=1'0"

BUTTERNUT INTERCHANGE
F.A.I. 690 & F.A.I. 481

BRIDGE No. 9
ROUTE I 481 N.B. over W.B. CONNECTIO
ABUTMENT PLANS

DRAWING NO.	SCALE	DATE	SHEET
7504-02	As shown	9/1/70	1

FED. RD. REG. NO.	STATE	FEDERAL AID PROJECT NO.	SHEET NO.	TOTAL SHEETS
1	NEW YORK	I-690-3(28) I-481-2(116)	162	309

INTERSTATE ROUTE CONNECTION 570
BUTTERNUT INTERCHANGE (PHASE 2)

ONONDAGA COUNTY

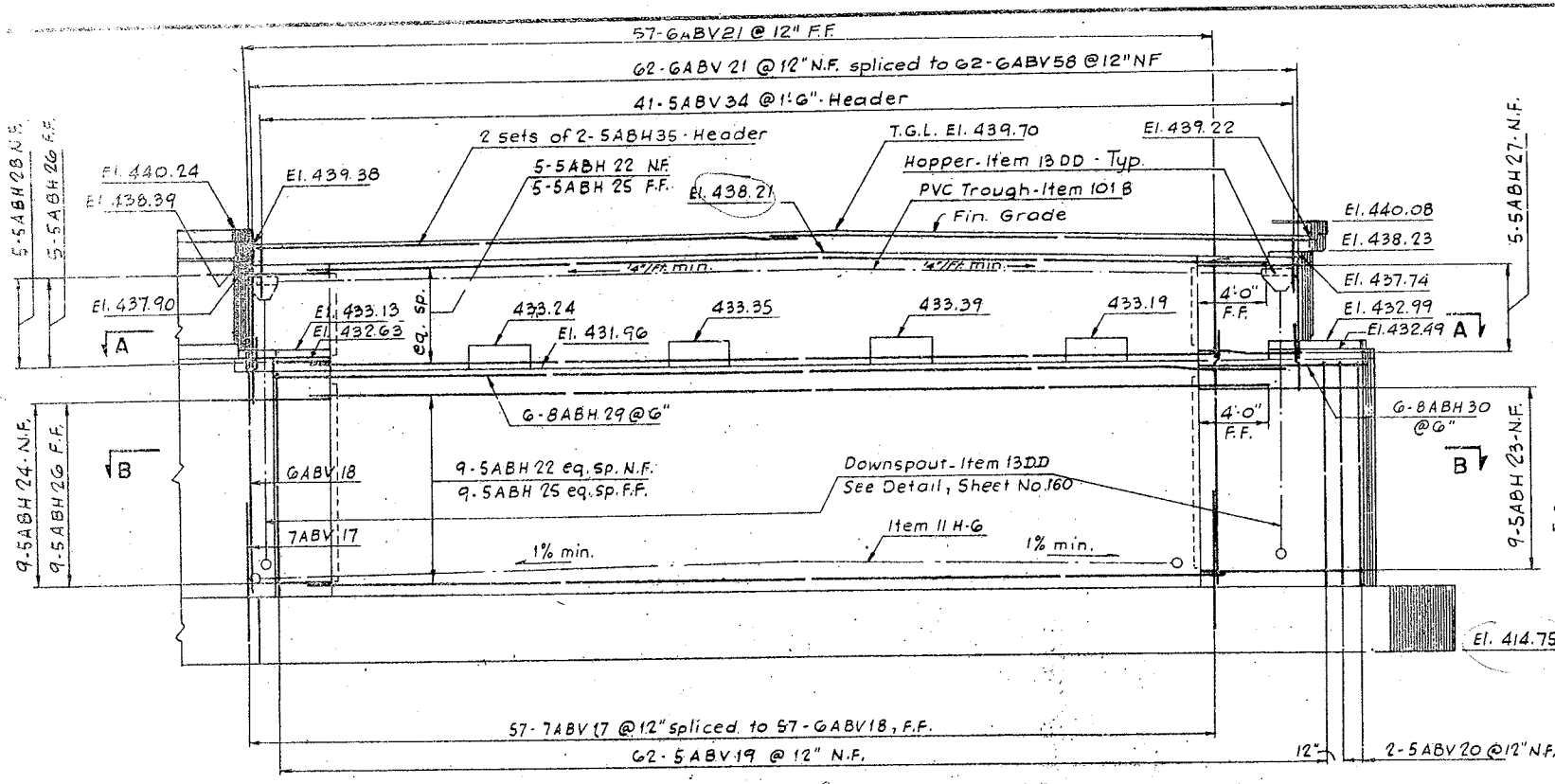

ELEVATION - SOUTH ABUTMENT (Piles not shown)

Scale $\frac{3}{16}$"=1'-0"

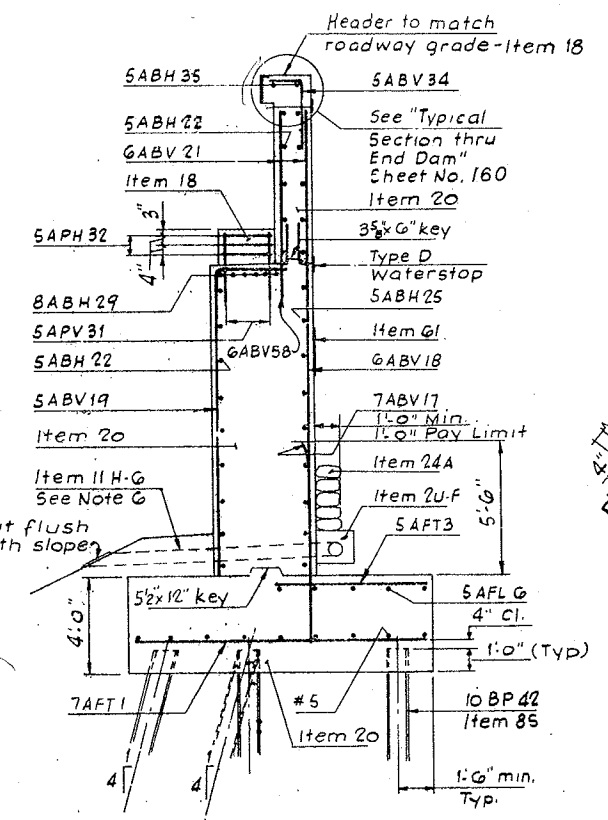

TYPICAL SECTION

Scale $\frac{1}{4}$"=1'-0"

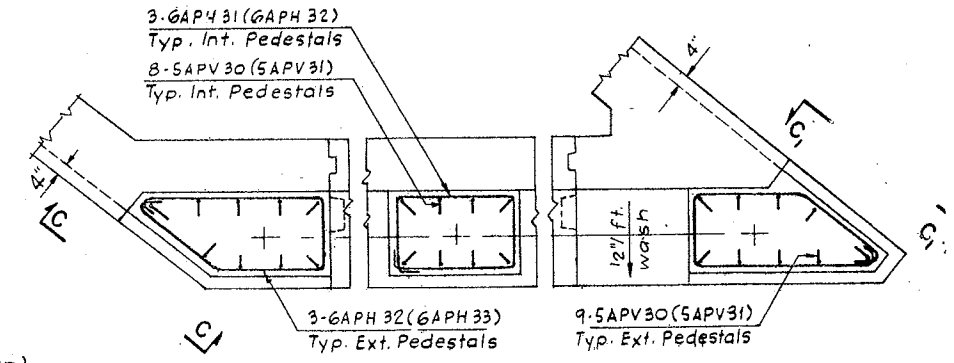

PLAN OF PEDESTALS

Scale $\frac{3}{8}$"=1'-0"

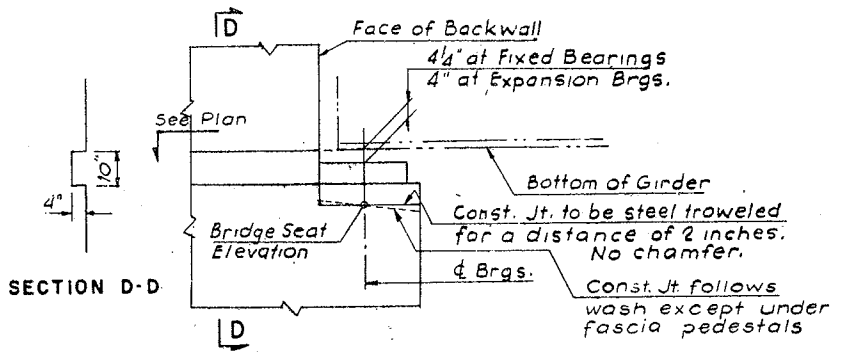

SECTION D-D

ELEVATION C-C

ELEVATION C_1-C_1 (Opposite Hand)

No scale

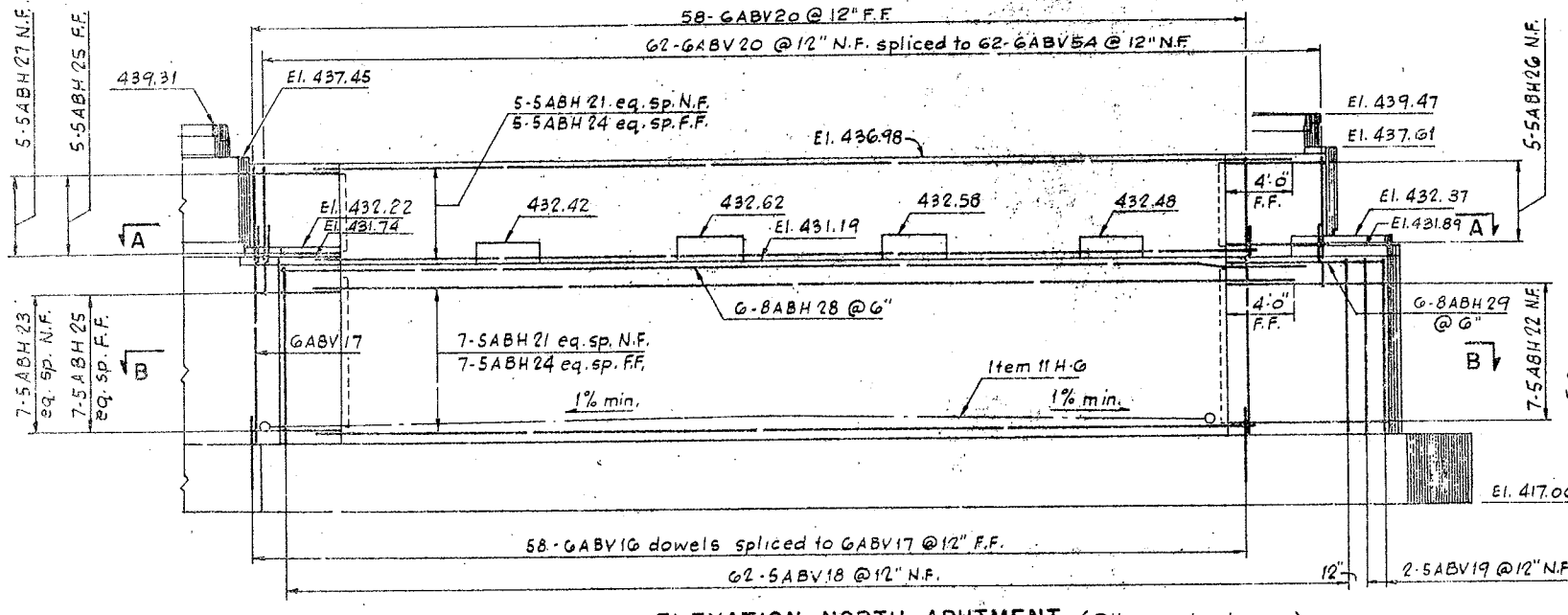

ELEVATION - NORTH ABUTMENT (Piles not shown)

Scale $\frac{3}{16}$"=1'-0"

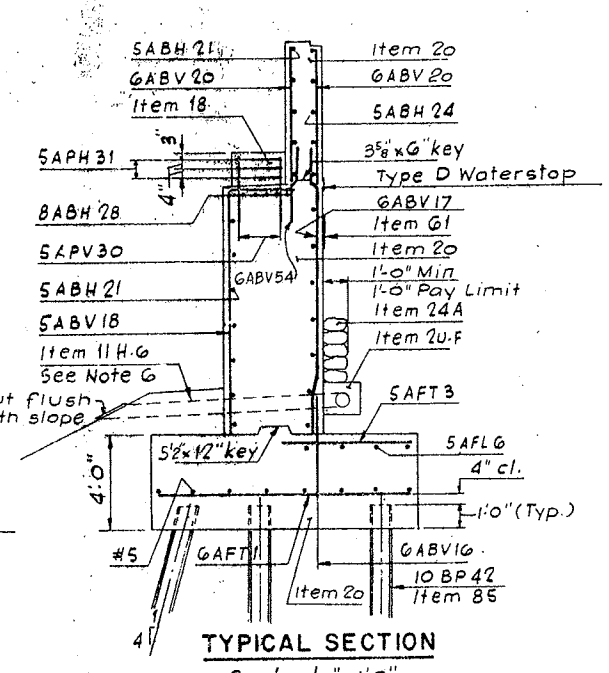

TYPICAL SECTION

Scale $\frac{1}{4}$"=1'-0"

NOTES

1. Anchor bolts for Bearings shall be 1¼" ϕ roughened or swedged bolts 1'-4½" long set 12" into concrete.
2. For Backfill and Excavation details see Sheet No. 128
3. For details of Bearings see Sheet No. 130
4. For Backwall and Waterstop details see Sheet No. 125.
5. For Rail Post spacing see Sheet No. 165
6. Non-perforated pipe shall be used thru abutment and berm.

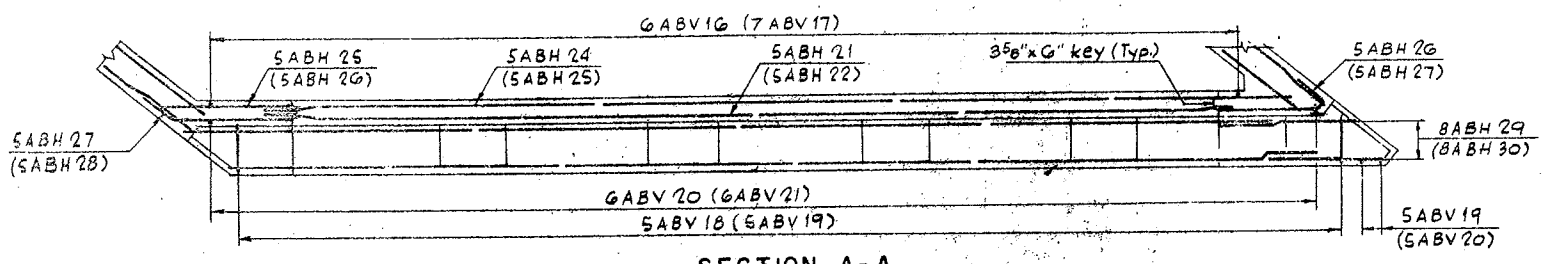

SECTION A-A

Scale $\frac{3}{16}$" = 1'-0"

Bar marks included in Parentheses ( ) refer to South Abutment.

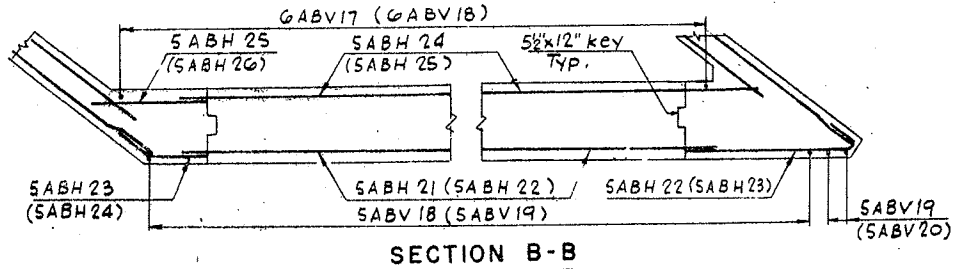

SECTION B-B

Scale $\frac{3}{16}$"=1'-0"

BUTTERNUT INTERCHANGE
F.A.I. 690 & F.A.I. 481

BRIDGE No. 9

ROUTE I 481 N.B. over W.B. CONNECTION
ABUTMENTS - ELEVATIONS & SECTION

DRAWING NO.	SCALE	DATE	SHEET NO.
7504-02	As shown	8/15/70	162

LOCKWOOD, KESSLER & BARTLETT, INC.

F.I.S.H. 70-7

FED. RD. REG. NO.	STATE	FEDERAL AID PROJECT NO.	SHEET NO.	TOTAL SHEETS
1	NEW YORK	I-690-8(28) I-481-2(116)	163	209

INTERSTATE ROUTE CONNECTION 570
BUTTERNUT INTERCHANGE (PHASE 2)

ONONDAGA COUNTY

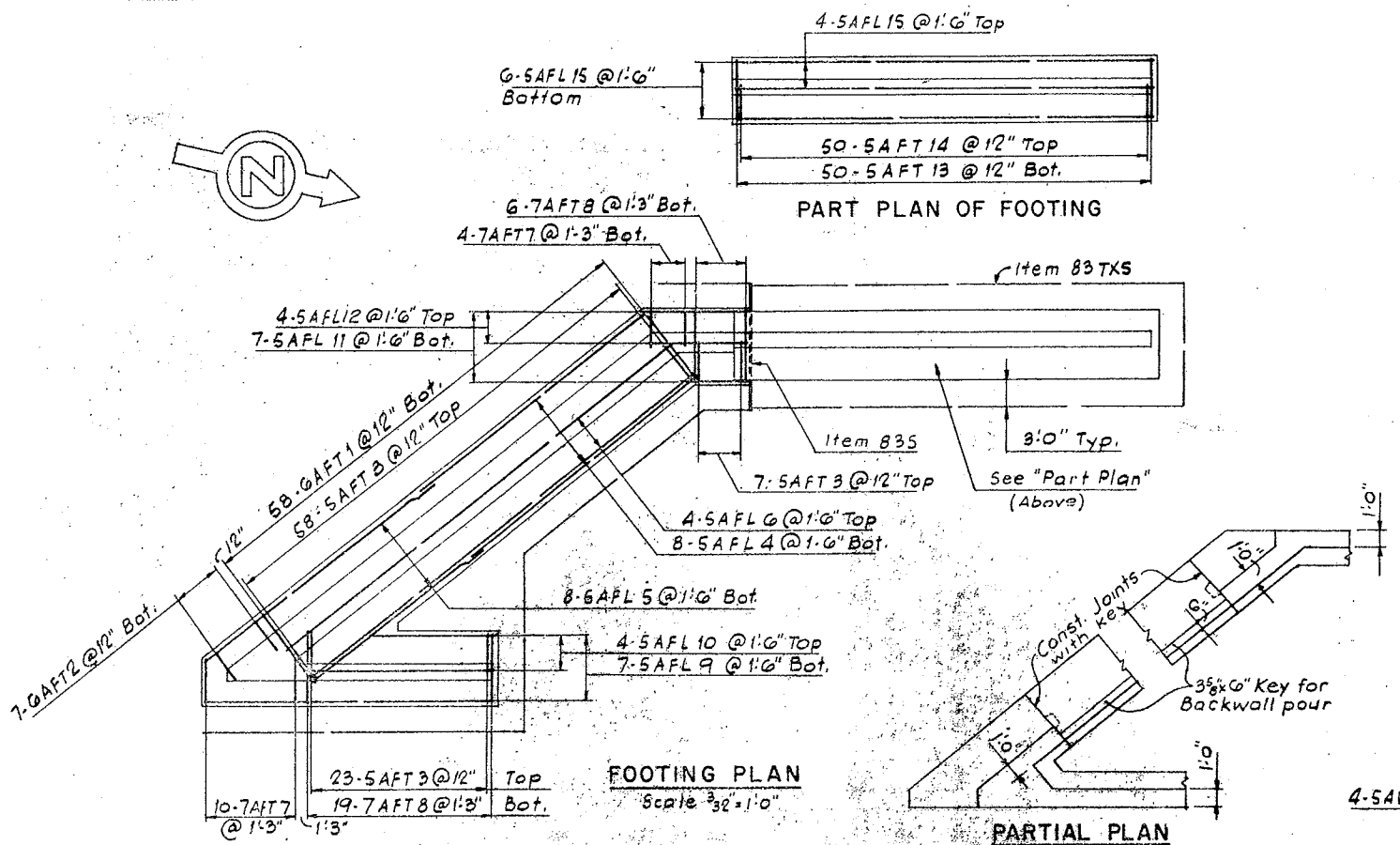

PART PLAN OF FOOTING

FOOTING PLAN
Scale 3/32"=1'-0"

PARTIAL PLAN
TOP OF INITIAL WALL POUR
Scale 3/16"=1'-0"

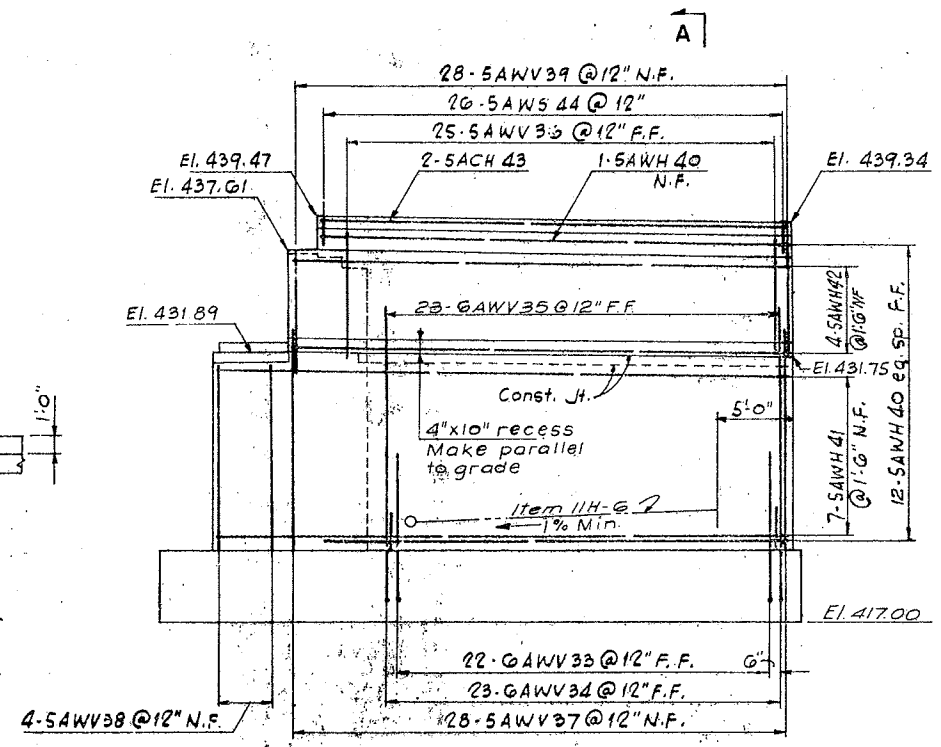

EAST ELEVATION (Piles not shown)
Scale 3/16"=1'-0"

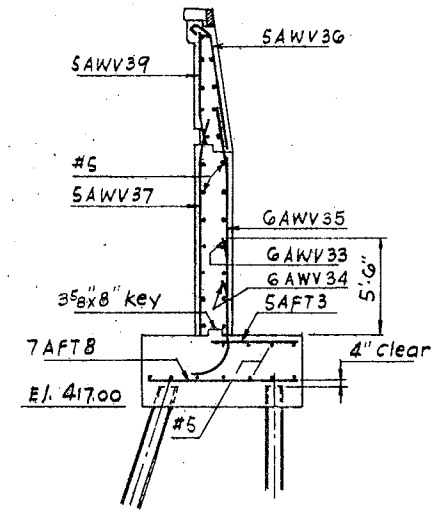

SECTION A-A
Scale 3/16"=1'-0"

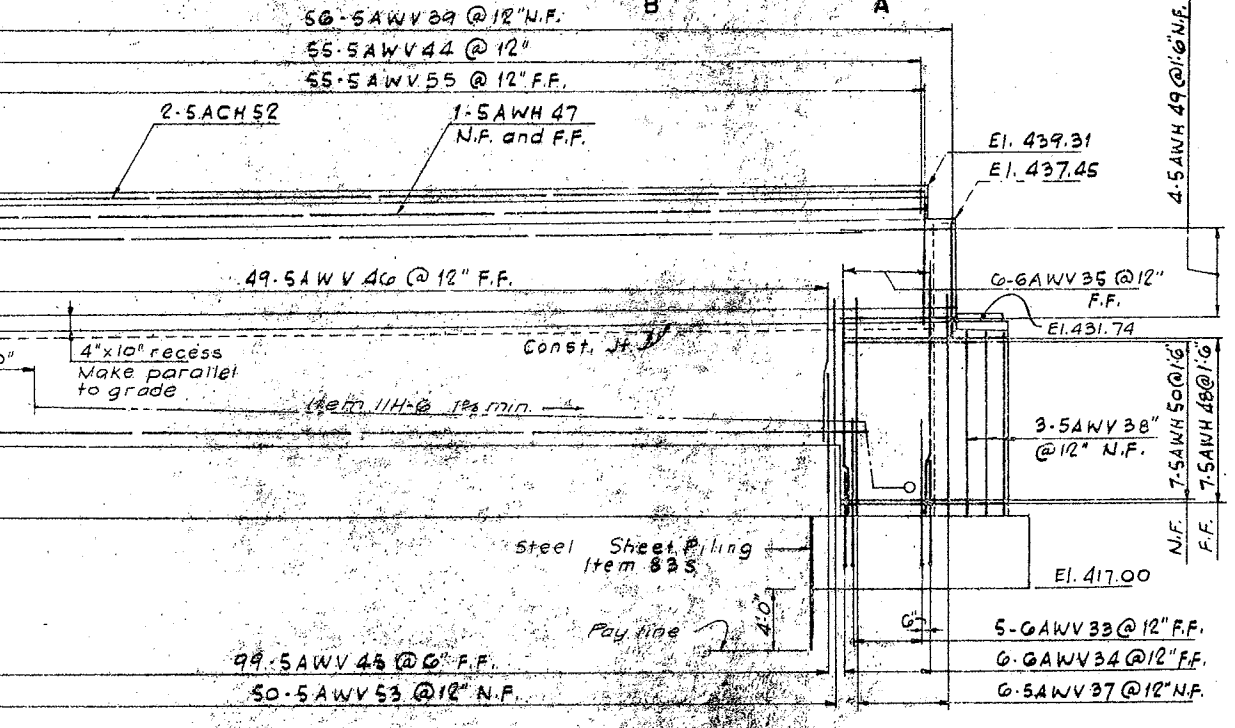

WEST ELEVATION (Piles not shown)
Scale 3/16"=1'-0"

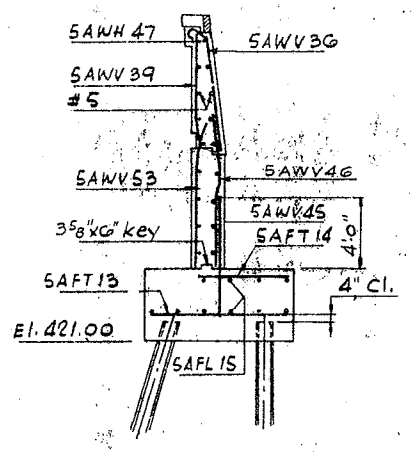

SECTION B-B
Scale 3/16"=1'-0"

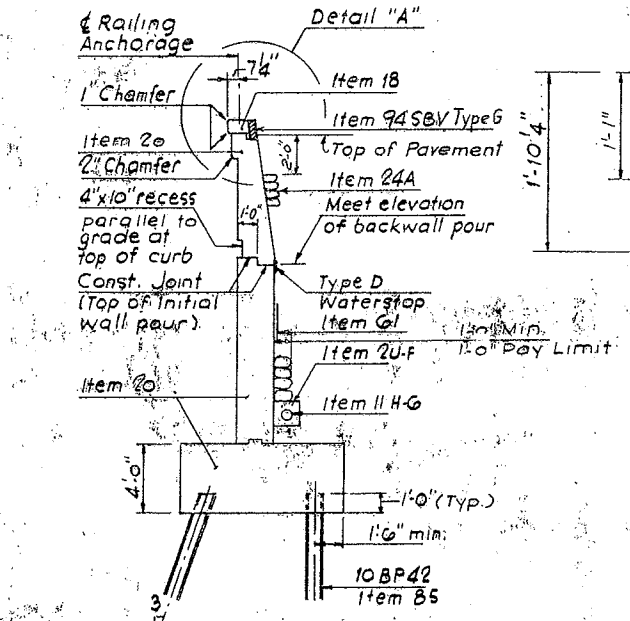

TYPICAL SECTION
THRU WINGWALL
AT NORTH & SOUTH ABUTMENTS
No Scale

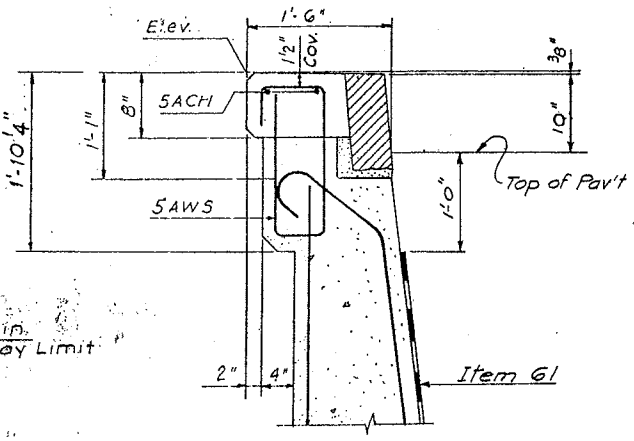

DETAIL A
Scale 1"=1'-0"

BUTTERNUT INTERCHANGE
F.A.I. 690 & F.A.I. 481
BRIDGE No. 9
ROUTE 1481 N.B. over W.B. CONNECTION
WINGWALLS AT NORTH ABUTMENT

DRAWING NO.	SCALE	DATE	SHEET NO.
7504-02	As shown	8/15/70	163

LOCKWOOD, KESSLER & BARTLETT, INC.

FED. RD. REG. NO.	STATE	FEDERAL PROJECT AID NO.	SHEET NO.	TOTAL SHEETS
1	NEW YORK	I-690-3(28) I-481-2(16)	164	309

INTERSTATE ROUTE CONNECTION 570
BUTTERNUT INTERCHANGE (PHASE 2)

ONONDAGA COUNTY

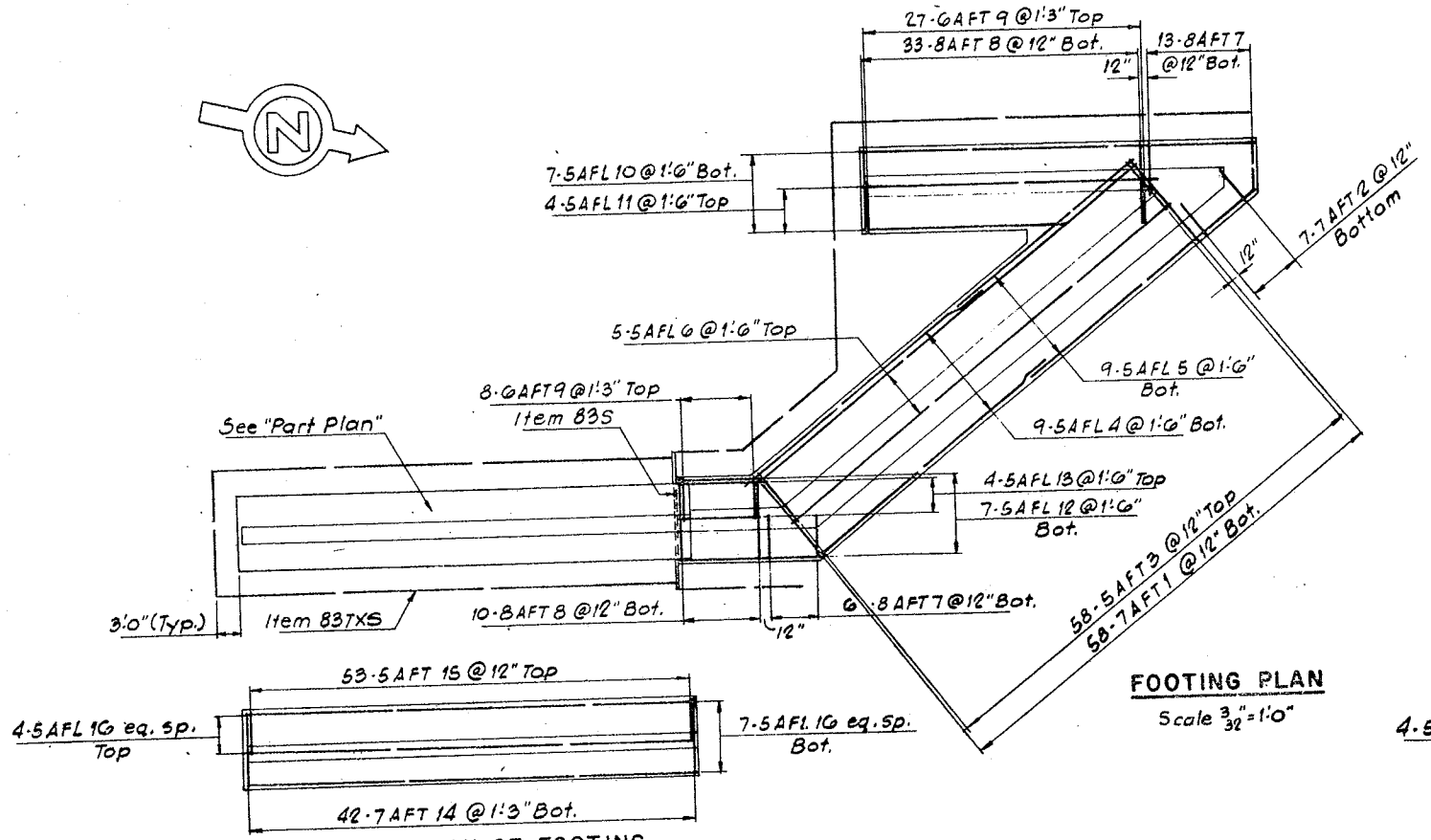

PART PLAN OF FOOTING

FOOTING PLAN
Scale $\frac{3}{32}$"=1'-0"

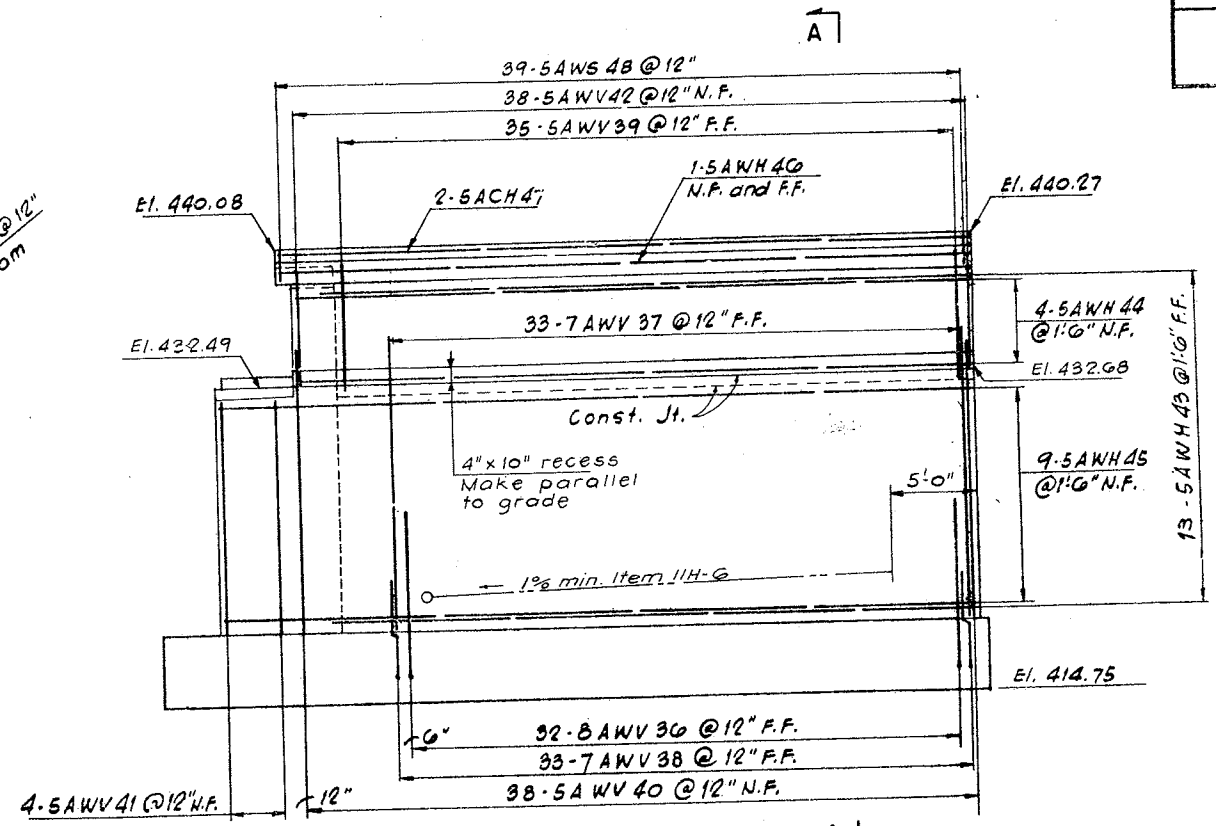

WEST ELEVATION (Piles not shown)
Scale $\frac{3}{16}$"=1'-0"

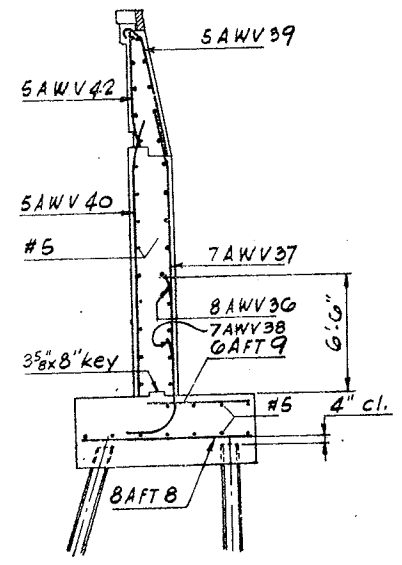

SECTION A-A
Scale $\frac{3}{16}$"=1'-0"

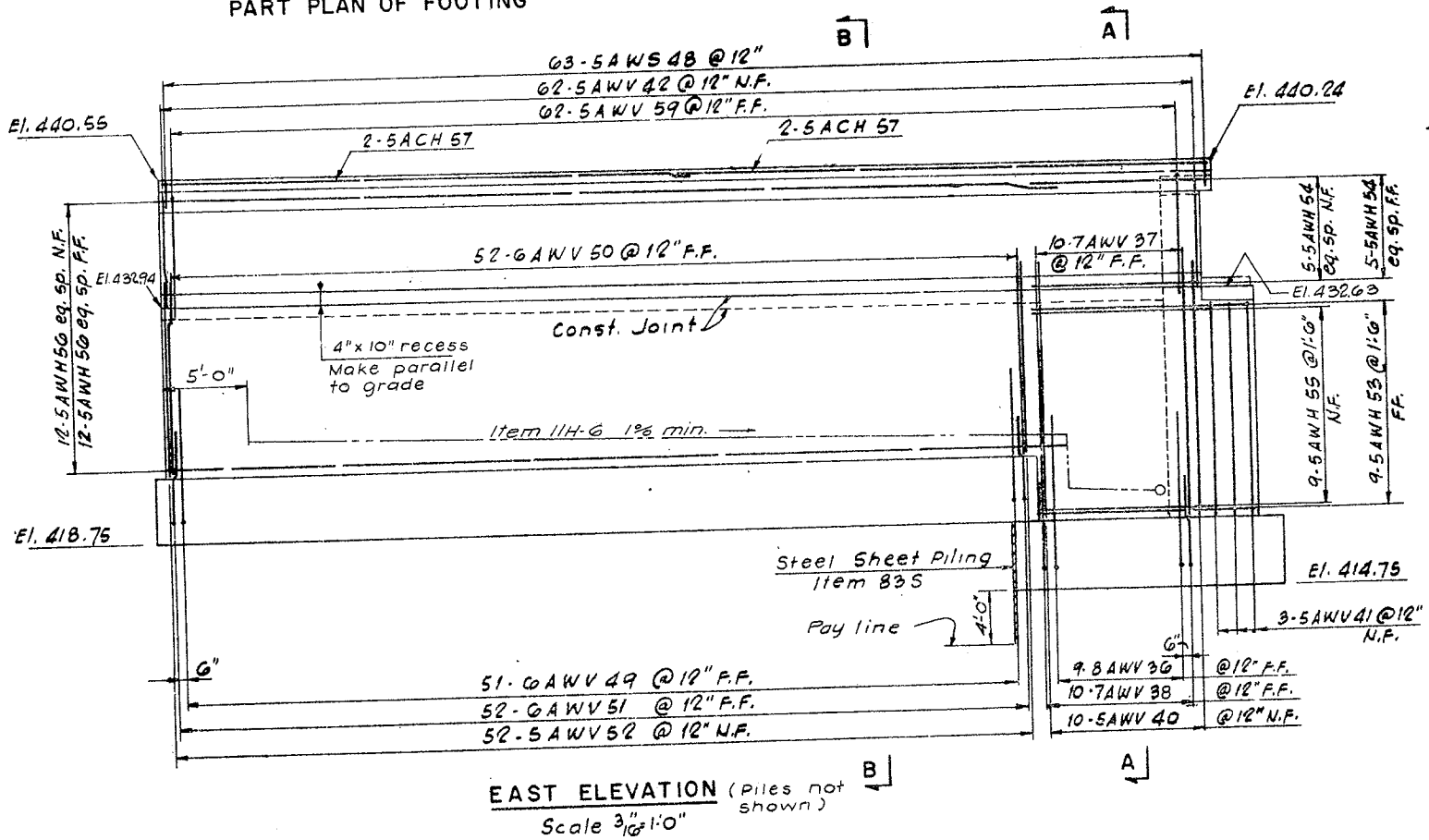

EAST ELEVATION (Piles not shown)
Scale $\frac{3}{16}$"=1'-0"

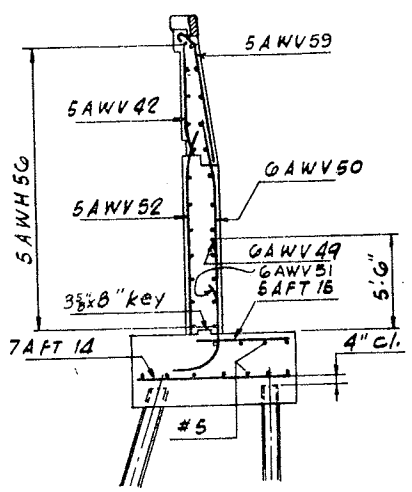

SECTION B-B
Scale $\frac{3}{16}$"=1'-0"

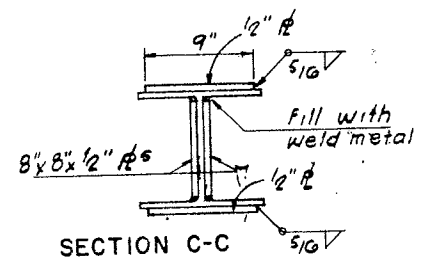

SECTION C-C

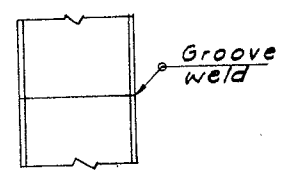

STEEL SPLICE FOR BEARING PIL

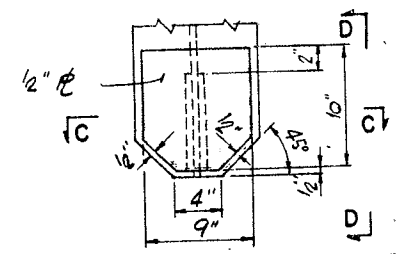

REINFORCED BEARING PILE TIP
Scale 1½"=1'-0"

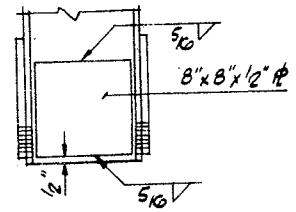

ELEVATION D-D

BUTTERNUT INTERCHANGE
F.A.I. 690 & F.A.I. 481

BRIDGE No. 9

ROUTE I 481 N.B. over W.B. CONNECTI
WINGWALLS AT SOUTH ABUTME

DRAWING NO.	SCALE	DATE	SHEE
7504-02	As shown	8/15/70	1

LOCKWOOD, KESSLER & BARTLETT, I
CONSULTING ENGINEERS — SYOSSET, NEW YO

B. LOWRY

F.I.S.H. 70-7

FED. RD. REG. NO.	STATE	FEDERAL AID PROJECT NO.	SHEET NO.
1	NEW YORK	I-690-3(28)	165
		I-481-2(116)	

INTERSTATE ROUTE CONNECTION 5
BUTTERNUT INTERCHANGE (PHASE

ONONDAGA COUNTY

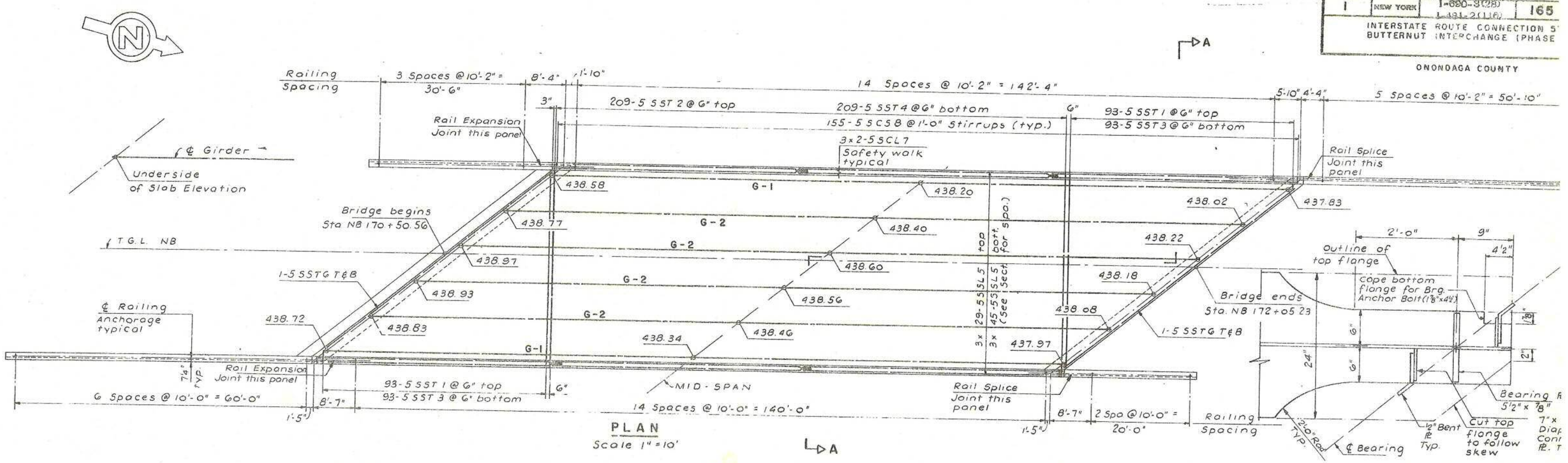

DETAIL - END OF GIRDER
Scale 1½" = 1'-0"

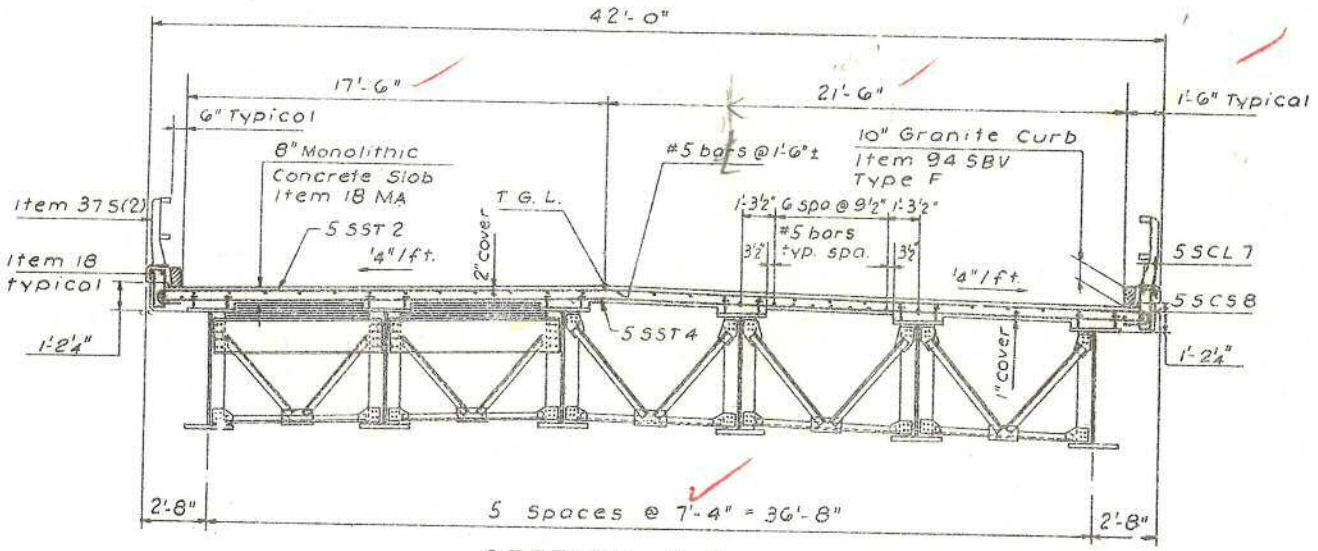

SECTION A-A
Scale ¼" = 1'-0"

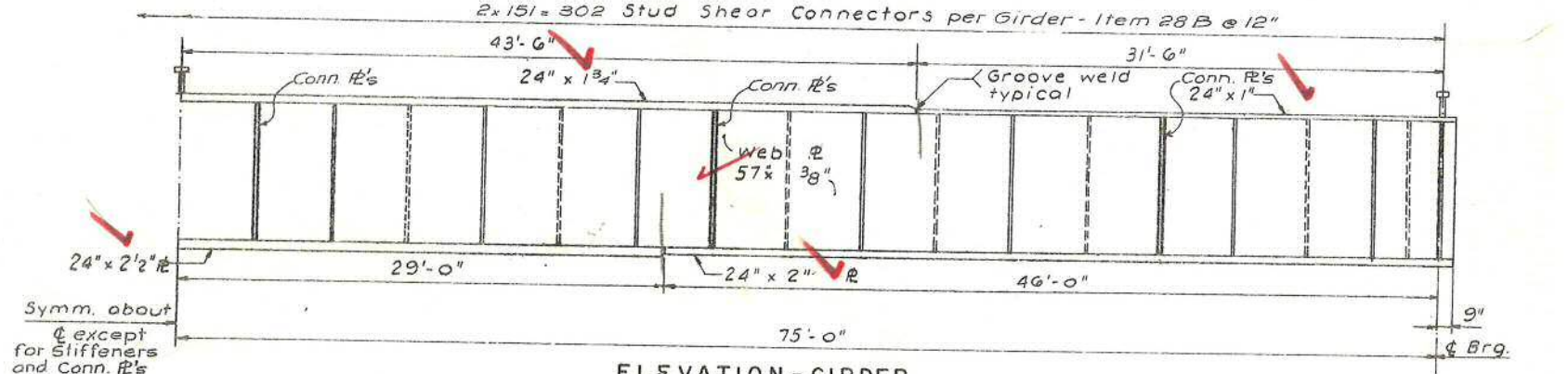

ELEVATION - GIRDER
N.T.S.

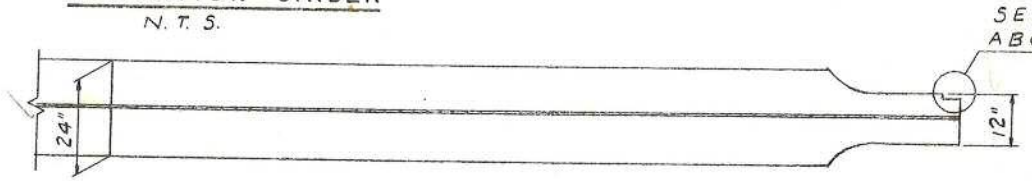

PLAN - BOTTOM FLANGE
N.T.S.

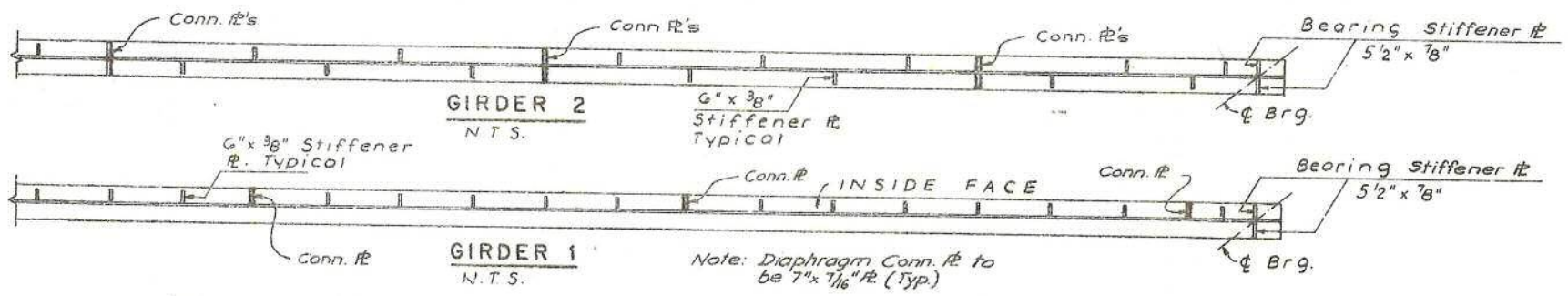

11/30/07

BUTTERNUT INTERCHANGE
F.A.I. 690 & F.A.I. 481
BRIDGE No. 9
ROUTE I481 N.B. over W.B. CONNECTIO
SUPERSTRUCTURE 1

By: B. LOWRY

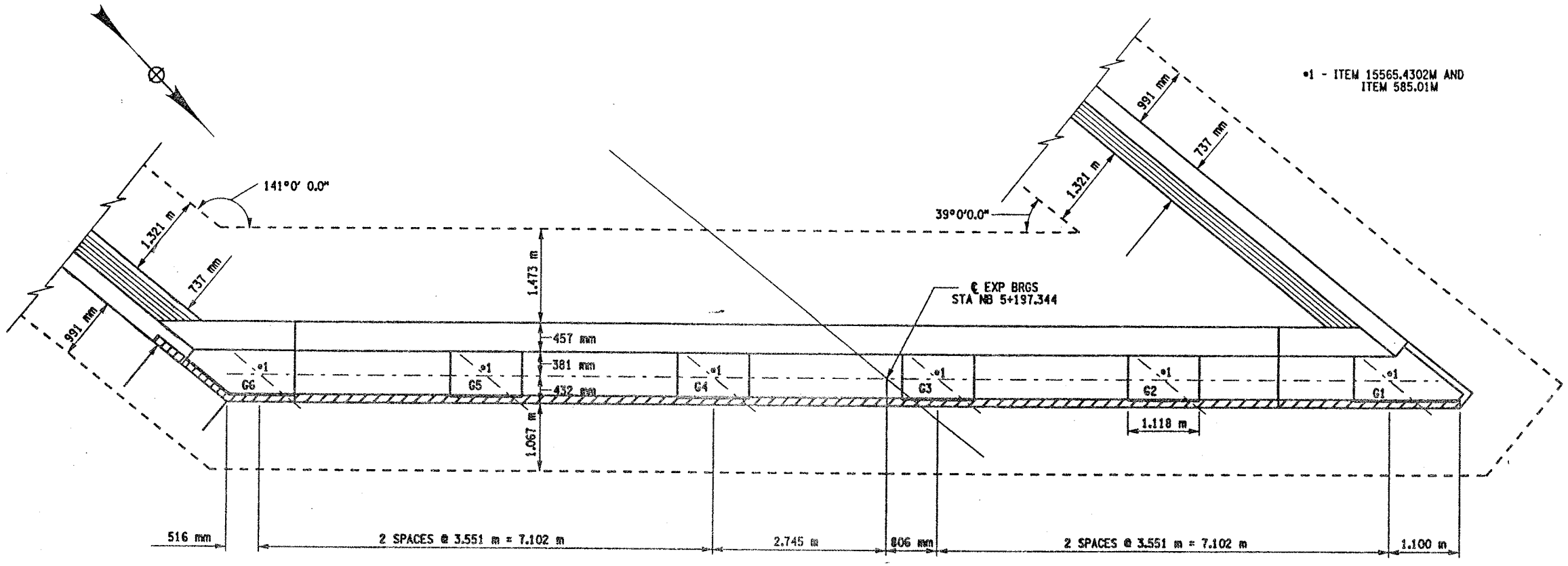

PLAN

SCALE 1:40

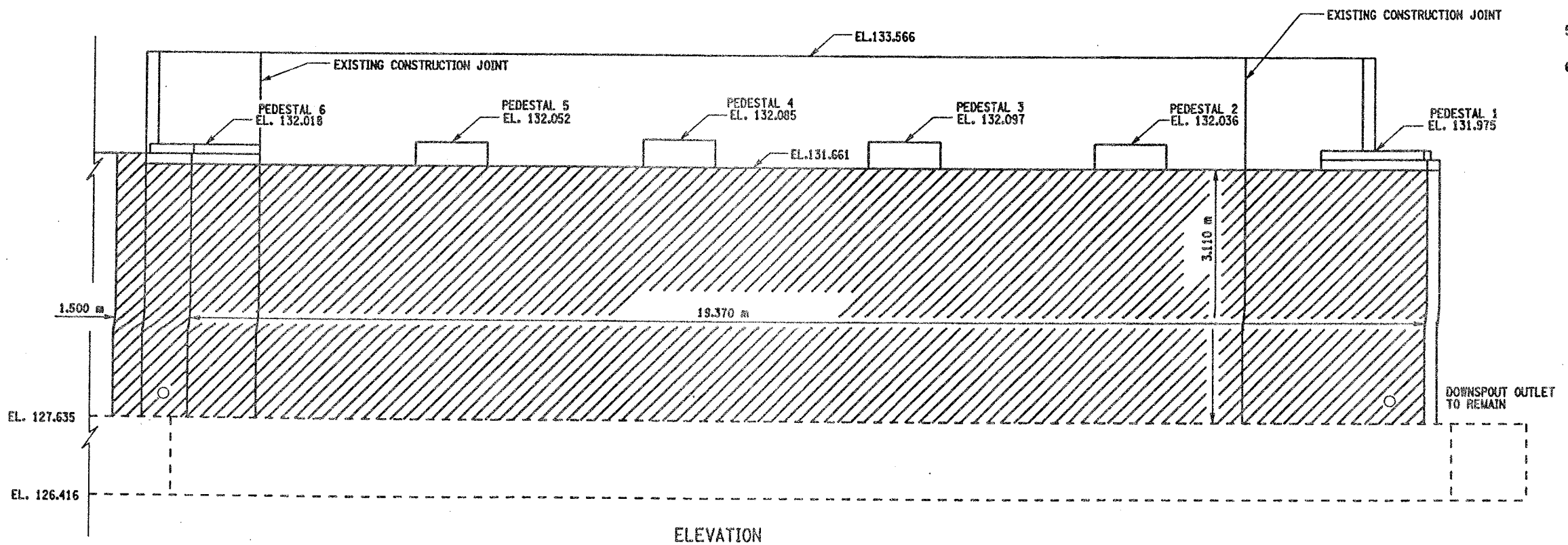

ELEVATION

SCALE 1:40

FED ROAD REG. NO.	STATE	CONTRACT NO.	SHEET NO.	TOTAL SHEETS
1	N.Y.	D259214	278	432

BRIDGE REHABILITATION PROJECT (ELEMENT SPECIFIC)

VARIOUS BRIDGES ON INTERSTATE 481

TOWNS OF DEWITT AND CICERO

ONONDAGA COUNTY

P.I.N. 305613 B.I.N. 1093550

NOTES:

1. ALL DIMENSIONS SHOWN FOR CONCRETE REMOVAL ARE APPROXIMATE AND SHALL BE FIELD VERIFIED BY THE CONTRACTOR AND EIC.
2. REMOVE CONCRETE TO LIMITS SHOWN AS WELL AS TO SOUND CONCRETE, A.O.B.E.
3. WHEN REMOVING EXISTING CONCRETE, SAWCUT 5 mm MIN. TO PRODUCE NEAT REMOVAL LINES. ANY COST TO BE INCLUDED IN THE BID PRICE FOR ITEM 582.05M.
4. ALL EXISTING REINFORCEMENT TO REMAIN.
5. ELEVATIONS ARE GIVEN FOR QUANTITY ESTIMATES ONLY.
6. REFER TO CONTRACT FISH 70-7 FOR ORIGINAL CONSTRUCTION DETAILS.
7. FOR REMOVAL DETAIL SEE DWG. AB14-1.
8. REF. TO DRAWING NO. JD-49 FOR CLEAN DRAINAGE SYSTEM DETAILS.

BRIDGE BEARING RESTORATION NOTES:

1. THE BRIDGE BEARING RESTORATION ITEM 15565.4302M SHALL INCLUDE ALL DESIGNATED WORK AS PER THE SPECIFICATION.
2. STRUCTURAL LIFTING SHALL BE USED WITH ALL EXPANSION BEARING RESTORATION.
3. IF THE CONTRACTOR ELECTS TO LIFT ONLY ONE GIRDER AT A TIME PER SPAN (TO A MAXIMUM OF 3 mm TO REMOVE LOAD FROM BEARINGS), NO VEHICULAR TRAFFIC RESTRICTIONS WILL BE REQUIRED AS STATED IN SPECIFICATION SECTION 585- STRUCTURAL LIFTING OPERATIONS.
4. BEARING RESTORATION SHALL INCLUDE REPLACEMENT OF BRONZE PLATE.
5. FIXED BEARINGS TO BE CLEANED IN PLACE. DO NOT DISASSEMBLE.
6. SEE BR-9 FOR BEARING RESTORATION DETAILS.

AREAS OF PROPOSED WORK: ITEM 582.05M REMOVAL OF STRUCTURAL CONCRETE- REPLACEMENT WITH CLASS A CONCRETE

LIST OF ITEMS USED:

ITEM 582.05M - REMOVAL OF STRUCTURAL CONCRETE- REPLACEMENT WITH CLASS A CONCRETE (CU)
ITEM 15565.4302M - BRIDGE BEARING RESTORATION (EA)
ITEM 585.01M - STRUCTURAL LIFTING, TYPE A (EA)

ALL DIMENSIONS ARE IN m UNLESS OTHERWISE NOTED

AS BUILT REVISIONS

SIGNATURE DATE

INTERSTATE 481 NB OVER WEST BOUND CONNECTOR

SOUTH ABUTMENT PLAN AND ELEVATION

STATE OF NEW YORK
DEPARTMENT OF TRANSPORTATION

FILENAME	REGION	DATE	DRAWING NO.
305613AT.A1B	3	10/02	AB15-1

DESIGN SUPERVISOR ESTIMATED BY DRAFTED BY
JOB MANAGER DESIGNED BY CHECKED BY
CHECKED BY

FED ROAD REG. NO.	STATE	CONTRACT NO.	SHEET NO.	TOTAL SHEETS
1	N.Y.	D259214	279	432

BRIDGE REHABILITATION PROJECT (ELEMENT SPECIFIC)

VARIOUS BRIDGES ON INTERSTATE 481

TOWNS OF DEWITT AND CICERO

ONONDAGA COUNTY

P.I.N. 305613 | B.I.N. 1093550

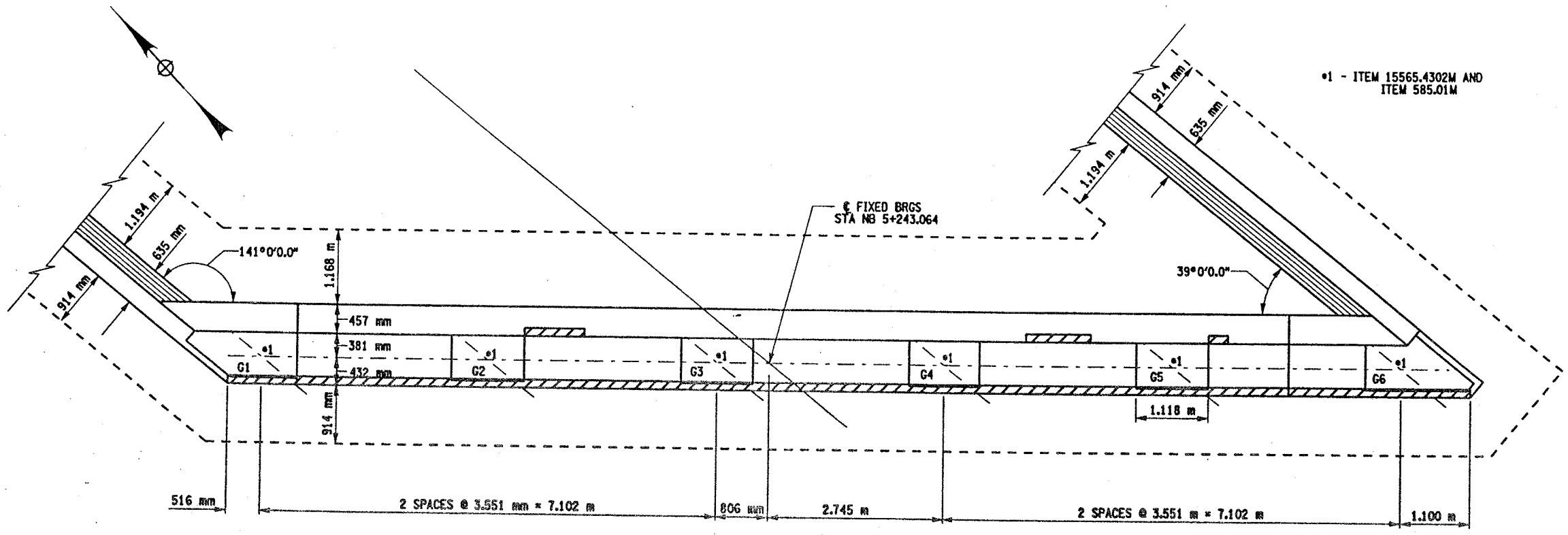

PLAN

SCALE 1:40

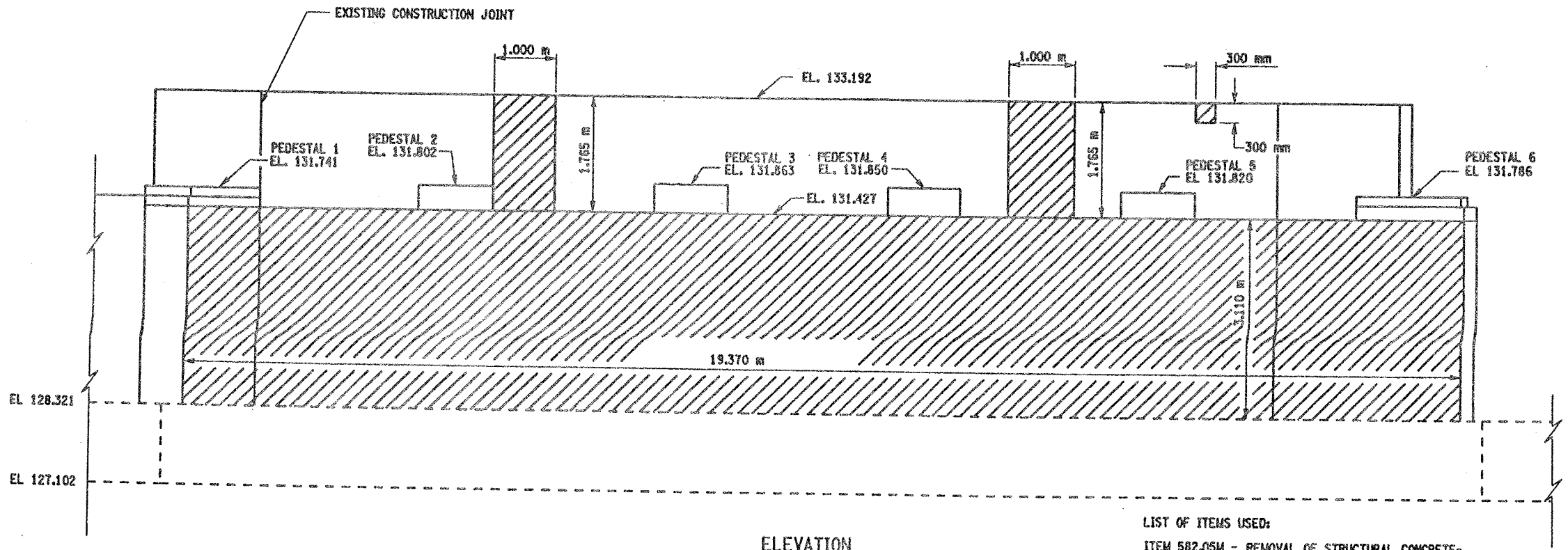

ELEVATION

SCALE 1:40

NOTES:

1. ALL DIMENSIONS SHOWN FOR CONCRETE REMOVAL ARE APPROXIMATE AND SHALL BE FIELD VERIFIED BY THE CONTRACTOR AND EIC.
2. REMOVE CONCRETE TO LIMITS SHOWN AS WELL AS TO SOUND CONCRETE, A.O.B.E.
3. WHEN REMOVING EXISTING CONCRETE, SAWCUT 5 mm MIN. TO PRODUCE NEAT REMOVAL LINES. ANY COST TO BE INCLUDED IN THE PRICE BID FOR ITEM 582.05M.
4. ALL EXISTING REINFORCEMENT TO REMAIN.
5. ELEVATIONS ARE GIVEN FOR QUANTITY ESTIMATES ONLY.
6. REFER TO CONTRACT FISH 70-7 FOR ORIGINAL CONSTRUCTION DETAILS.
7. FOR REMOVAL DETAIL SEE DWG. AB14-1.
8. REMOVE ASBESTOS SHEET PACKING MATERIAL AT NORTH ABUTMENT, AS ENCOUNTERED. ASBESTOS REMOVAL SHALL BE PAID FOR UNDER ITEM 210.9913M.

BRIDGE BEARING RESTORATION NOTES:

1. THE BRIDGE BEARING RESTORATION ITEM 15565.4302M SHALL INCLUDE ALL DESIGNATED WORK AS PER THE SPECIFICATION.
2. STRUCTURAL LIFTING SHALL BE USED WITH ALL EXPANSION BEARING RESTORATION.
3. IF THE CONTRACTOR ELECTS TO LIFT ONLY ONE GIRDER AT A TIME PER SPAN (TO A MAXIMUM OF 3 mm TO REMOVE LOAD FROM BEARINGS), NO VEHICULAR TRAFFIC RESTRICTIONS WILL BE REQUIRED AS STATED IN SPECIFICATION SECTION 585- STRUCTURAL LIFTING OPERATIONS.
4. BEARING RESTORATION SHALL INCLUDE REPLACEMENT OF BRONZE PLATE.
5. FIXED BEARINGS TO BE CLEANED IN PLACE. DO NOT DISASSEMBLE.
6. SEE BR-9 FOR BEARING RESTORATION DETAILS.

AREAS OF PROPOSED WORK: ITEM 582.05M REMOVAL OF STRUCTURAL CONCRETE- REPLACEMENT WITH CLASS A CONCRETE

LIST OF ITEMS USED:

ITEM 582.05M - REMOVAL OF STRUCTURAL CONCRETE- REPLACEMENT WITH CLASS A CONCRETE (CM)
ITEM 15565.4302M - BRIDGE BEARING RESTORATION (EA)
ITEM 585.01M - STRUCTURAL LIFTING, TYPE A (EA)
ITEM 210.9913M - REMOVAL & DISPOSAL OF MISCELLANEOUS ASBESTOS CONTAINING MATERIAL BV-12 (LS)

ALL DIMENSIONS ARE IN m UNLESS OTHERWISE NOTED

AS BUILT REVISIONS

SIGNATURE DATE

INTERSTATE 481 NB OVER WEST BOUND CONNECTOR

NORTH ABUTMENT PLAN AND ELEVATION

STATE OF NEW YORK
DEPARTMENT OF TRANSPORTATION

FILENAME	REGION	DATE	DRAWING NO.
305613AT.A18	3	10/02	AB15-2

DESIGNED BY
DRAFTED BY
ESTIMATED BY
CHECKED BY
JOB MANAGER
DESIGN SUPERVISOR

1093550

FED ROAD REG. NO.	STATE	CONTRACT NO.	SHEET NO.	TOTAL SHEETS
1	N.Y.	D259214	349	432

BRIDGE REHABILITATION PROJECT (ELEMENT SPECIFIC)
VARIOUS BRIDGES ON INTERSTATE 481
TOWNS OF DEWITT AND CICERO
ONONDAGA COUNTY
P.I.N. 305613 B.I.N. 1093550

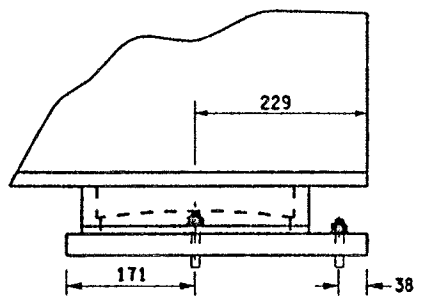

SIDE ELEVATION

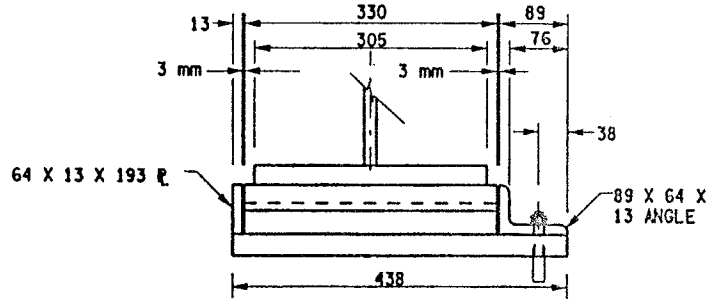

END ELEVATION

EXPANSION BEARING
SCALE: 1 TO 5

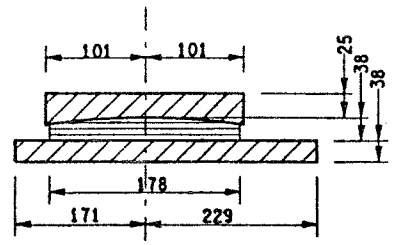

SECTION
SCALE: 1 TO 5

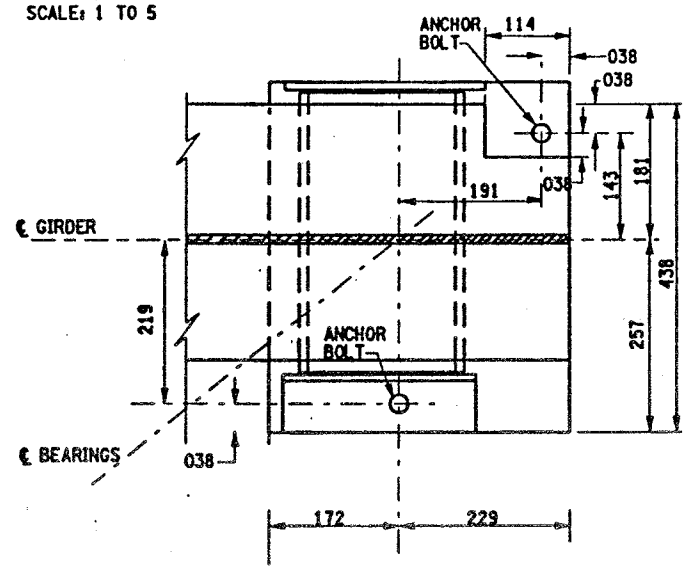

PLAN
EXPANSION BEARING
SCALE: 1 TO 5

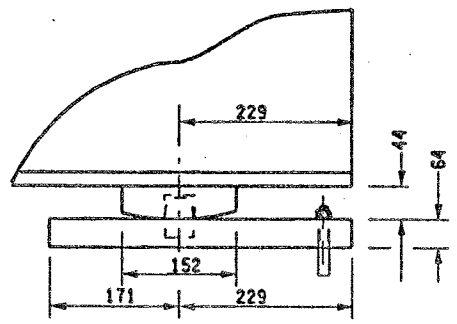

SIDE ELEVATION

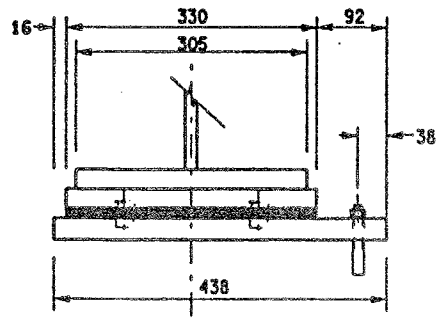

END ELEVATION

FIXED BEARING
SCALE: 1 TO 5

℄ PERFORM STRUCTURAL LIFTING UNDER ITEM 585.01M - STRUCTURAL LIFTING OPERATIONS - TYPE A (LIFTING AT AN ABUTMENT).

JACKING LOADS:

D.L. = 50 MT
L.L. = 50 MT
TOTAL = 100 MT

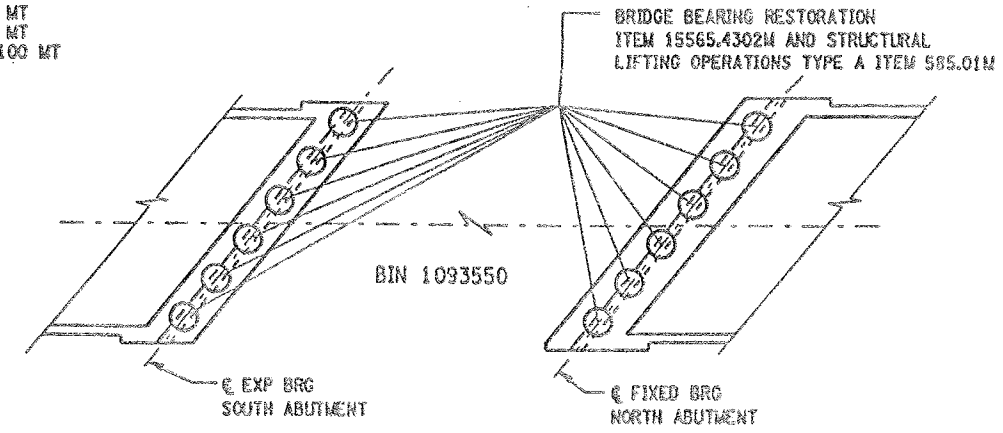

BRIDGE PLAN SCHEMATIC
NOT TO SCALE

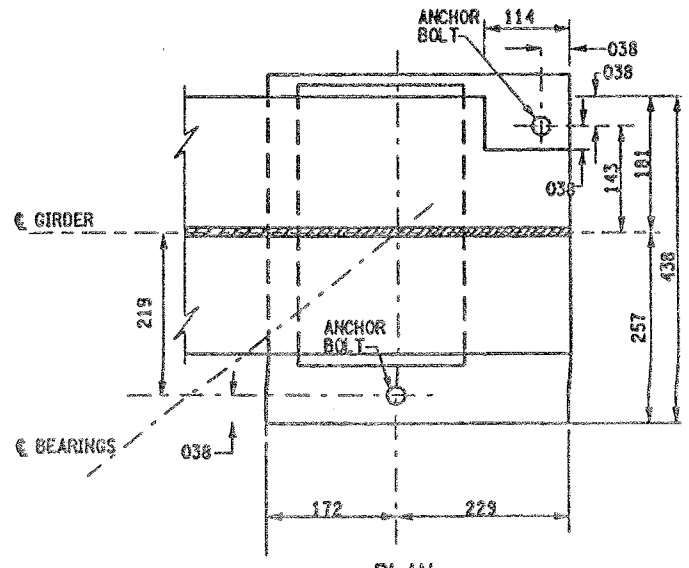

PLAN
FIXED BEARING
SCALE: 1 TO 5

LIST OF ITEMS USED:

ITEM 15565.4302M - BRIDGE BEARING RESTORATION (EA)
ITEM 585.01M - STRUCTURAL LIFTING OPERATIONS TYPE A (EA)

BRIDGE BEARING RESTORATION NOTES:

1. BRIDGE BEARING RESTORATION ITEM 15565.4302M SHALL INCLUDE ALL DESIGNATED WORK AS PER THE SPECIFICATION.
2. STRUCTURAL LIFTING SHALL BE USED WITH ALL EXPANSION BEARING RESTORATION.
3. IF THE CONTRACTOR ELECTS TO LIFT ONLY ONE GIRDER AT A TIME PER SPAN (TO A MAXIMUM OF 3 mm TO REMOVE LOAD FROM BEARINGS), NO VEHICULAR TRAFFIC RESTRICTIONS WILL BE REQUIRED AS STATED IN SPECIFICATIONS SECTON 585-STRUCTURAL LIFTING OPERATIONS.
4. BEARING RESTORATION SHALL AS A MINIMUM, AND IN ALL CASES INCLUDE REPLACEMENT OF BRONZE PLATE.
5. FIXED BEARING TO BE CLEANED IN PLACE. DO NOT DISASSEMBLE.

JACKING NOTES:

THE METHOD OF LIFTING SHALL BE APPROVED BY THE DEPUTY CHEIF ENGINEER (STRUCTURES), DSES, TWO WEEKS PRIOR TO THE START OF THE WORK.

NO LIFTING WILL BE ALLOWED UNTIL ALL TEMPORARY SUPPORTS ARE SECURED.

WHEN POSSIBLE, THERE WILL BE NO LIVE LOAD DURING LIFTING.

LIFTING SHALL BE CONFINED TO ONE END OF A SPAN AT ANY ONE TIME.

IF THE CONTRACTOR ELECTS TO LIFT ONLY ONE GIRDER AT A TIME PER PIER (TO A MAXIMUM OF 3 mm TO REMOVE LOAD FROM BEARING), NO VEHICULAR TRAFFIC RESTRICTIONS WILL BE REQUIRED AS STATED IN THE SPECIFICATION SECTION 585-STRUCTURAL LIFTING OPERATIONS.

ALL DIMENSIONS ARE IN mm UNLESS OTHERWISE NOTED

AS BUILT REVISIONS

SIGNATURE DATE

INTERSTATE 481 NB
OVER
WB CONNECTOR

BEARING RESTORATION DETAILS

STATE OF NEW YORK
DEPARTMENT OF TRANSPORTATION

FILENAME	REGION	DATE	DRAWING NO.
305613ZZM1A	3	10/02	BR-9

DESIGN SUPERVISOR ____ JOB MANAGER ____ DESIGNED BY ____ ESTIMATED BY ____ DRAFTED BY ____ CHECKED BY ____ CHECKED BY ____

B.I.N.: 1093550

Work to be done list:

- Work Zone Traffic Control: Staged
- Deck removal and replacement with cast in place deck with single slope barrier.
- Approach slab removal and replacement with cast in place approach slab
- Joint installation.
- Backwall repair.
- Bearing restoration and structural lifting.
- Install transition railing

Work listed above provides a general overall scope of work for this B.I.N. The order in which work is listed above does not indicate the actual order in which to contractor will proceed. The work to be done list may not include all work in the contract documents.

PREPARED BY: ON:	ALTERED BY: ON:
	

AS BUILT REVISIONS
DESCRIPTION OF ALTERATIONS:

SIGNATURE DATE

The above stamp and signatures approved ST-1 through ST-20

It is a violation of law for any person, unless they are acting under the direction of a licensed professional engineer, architect, landscape architect, or land surveyor, to alter an item in any way. If an item bearing the stamp of a licensed professional is altered the altering engineer, architect, landscape architect, or land surveyor shall stamp the document and include the notation "altered by" followed by their signature, the date of such alterations, and a specific description of the alteration.

Bridge Deck Replacement Information

BIN:	1093550
Feature Carried:	I-481 NB
Feature Crossed:	WB Connector
Original Contract Number:	FISH 70-7
Secondary Contract Number:	None

Geometry

Bridge Length from Bridge Begins to Bridge Ends (ft):	154.67
Existing Bridge Width (ft):	42
Existing Curb to Curb / Face of Rail to Face of Rail (ft):	39
Assumed Existing Total Deck Thickness (in):	9.5
Proposed Bridge Width (ft):	43.00
Proposed Curb to Curb / Face of Rail to Face of Rail (ft):	40
Number of Spans:	1
Length of Each Span, CL of Brgs to CL of Brgs (ft):	150
Skew Angle:	51
Proposed Deck Thickness (in):	8.5
Begin Approach Slab Length (ft):	38.55 (See Layout)
Begin Approach Slab Width (ft):	43
End Approach Slab Length (ft):	28.8 (See Layout)
End Approach Slab Width (ft):	43

(The ends of both approach slabs are parallel to the centerline of bearings unless otherwise shown on a detail. The length of the approach slab is measured parallel to the station line. The width is measured perpendicular to the station line.)

Superstructure

Number of Girders in Transverse Section:	6
Girder Type:	Steel
Center to Center Girder Spacing (ft):	7.33
Left Overhang - center of girder to edge of deck (ft):	3.17
Right Overhang - center of girder to edge of deck (ft):	3.17
Width of Left Brush Curb or Sidewalk (ft) (Width of the curb is not included):	0.00
Width of Right Brush Curb or Sidewalk (ft) (Width of the curb is not included):	0.00
Type of Shear Connectors:	Studs
Number of Studs on Girder Flange Transversely by row:	2
Longitudinal Spacing of Rows of Studs (in):	6
Scuppers:	None

Staging

Staging Diagram:	Right (See Detail)
"A" Dimension (ft)	20.000
"B" Dimension (ft)	3.170
"C" Dimension (ft)	17.330
"D" Dimension (ft)	2.000
"E" Dimension (ft)	20.500
"F" Dimension (ft)	17.000
"G" Dimension (ft)	17.500

Number of Girders in Stage 1 Transverse Section: _____

Number of Girders in Stage 2 Transverse Section: _____

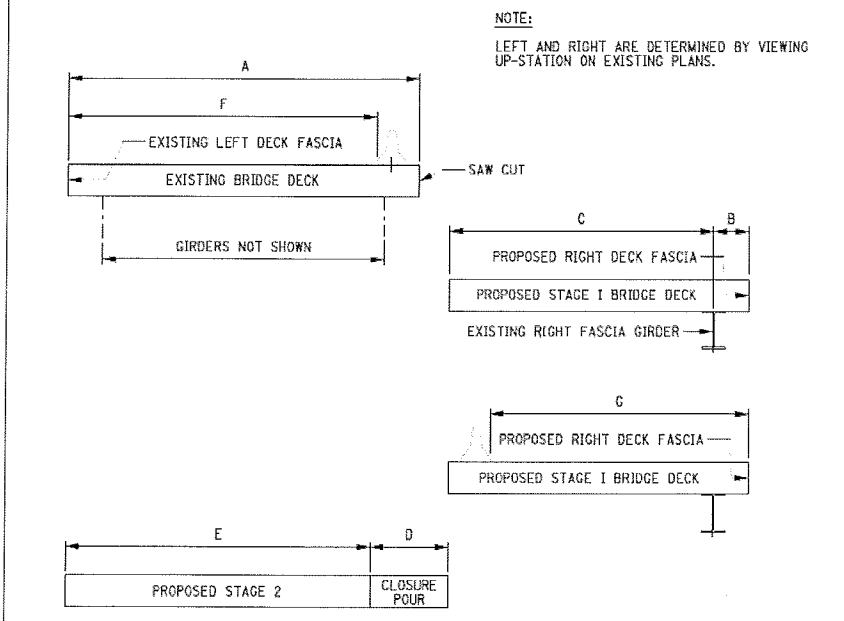

STAGED DECK REPLACEMENT DIMENSIONS
(PROPOSED STAGE 1 BRIDGE DECK - RIGHT SIDE)

Superstructure Slab Reinforcement

Deck Reinforcement Design to be Provided:	Traditional
Type of Reinforcement to be Provided:	Stainless Steel
Top Transverse Bar Size:	#5
Top Transverse Bar Max. Spacing (in):	6
Bottom Transverse Bar Size:	#5
Bottom Transverse Bar Max. Spacing (in):	6
Top Longitudinal Bar Size:	#5
Top Longitudinal Bar Max. Spacing (in):	18
Bottom Longitudinal Bar Size:	#5
Bottom Longitudinal Bar Max. Spacing (in):	9
Additional Top Overhang Reinforcement:	#4 @ 6"
Additional Top Overhang Reinforcement Required for Stage 1 Overhang?	No
Additional Top Overhang Reinforcement Required for Stage 2 Overhang?	No
Additional Negative Moment Reinforcement:	Not Applicable
Locations of points of dead load contraflexure:	Not Applicable

(Additional negative moment reinforcement shall be required on all continuous spans. The additional reinforcement shall be placed in the top mat to a point 2'-6" beyond the points of dead load contraflexure on either side of the pier.

Approach Slab Reinforcement

Top Transverse Bar Size:	#5
Top Transverse Bar Max. Spacing (in):	8
Bottom Transverse Bar Size:	#5
Bottom Transverse Bar Max. Spacing (in):	8
Top Longitudinal Bar Size:	#5
Top Longitudinal Bar Max. Spacing (in):	8
Bottom Longitudinal Bar Size:	#5
Bottom Longitudinal Bar Max. Spacing (in):	8

(See BD Sheet SA1R1 and SA3E for corner reinforcement details with steel railings).

Begin Approach Sleeper Slab Detail:	No Sleeper Slab Required
End Approach Sleeper Slab Detail:	No Sleeper Slab Required

(If required, the Sleeper Slab Detail is provided in the proposal.)

Minimum Lap Lengths for Superstructure Slabs, Approach Slabs, and Barriers.

#4 bar - 1'-9"
#5 bar - 2'-2"
#6 bar - 2'-10"
#7 bar - 4'-9"

Railing/Barrier

Bridge Railing/ Barrier Type (Left): Concrete Single Slope
Bridge Railing/Barrier Type (Right): Concrete Single Slope

Pedestrian Fence Required? No
(When required Pedestrian Fence shall be used for the whole length of the bridge.)
Snow Fence Required? No
(When Snow Fence is required it shall only be used at locations to protect the under roadway.)

Joint Details

Required Joint Detail at Begin Abutment: Armorless Joint with 2 foot backwall repair (See Detail)
Total Movement at Begin Abutment or Begin Sleeper Slab (in): 1.55
Required Joint Detail at Pier(s): Not Applicable
Total Movement at Pier (in): Not Applicable
Required Joint Detail at End Abutment: Jointless with 2 foot deep backwall repair (See Detail)
Total Movement at End Abutment or End Approach Slab (in): Not Applicable
(If an armorless joint is required, then the contractor shall choose a joint opening using the table on BD-JT1E. The seal type shall be determined by the contractor and the total movement is provided.)

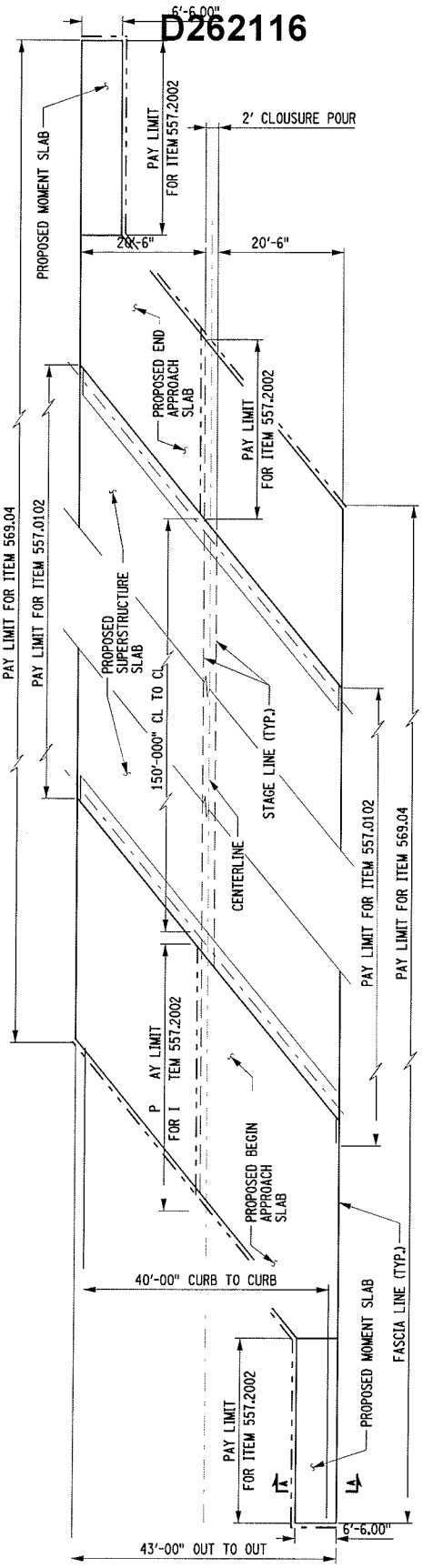

LAYOUT BIN 1093550

NOT TO SCALE

— - - — - - DENOTES PAY LIMIT FOR ITEM 520.50140008

PROPOSED MOMENT SLAB ON EXISTING U-WALL WITH OVERHANG

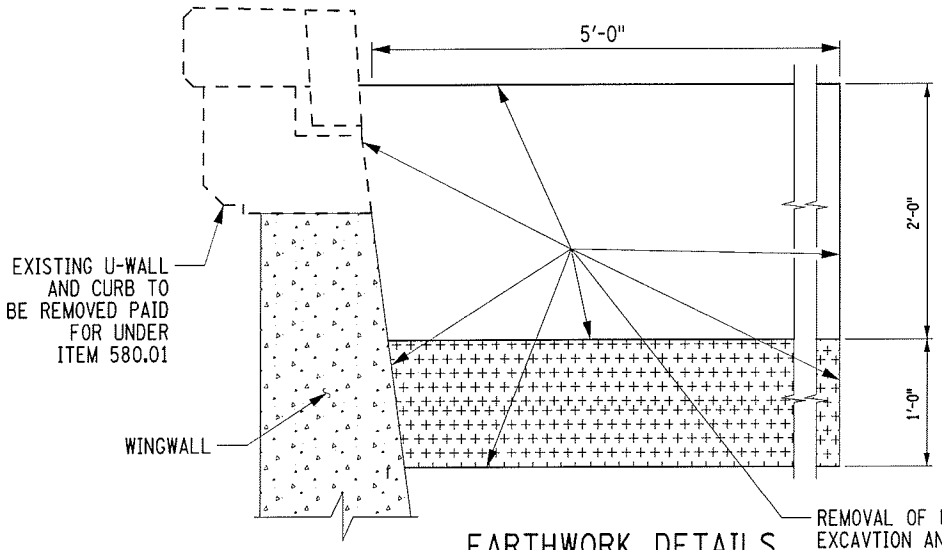

EARTHWORK DETAILS

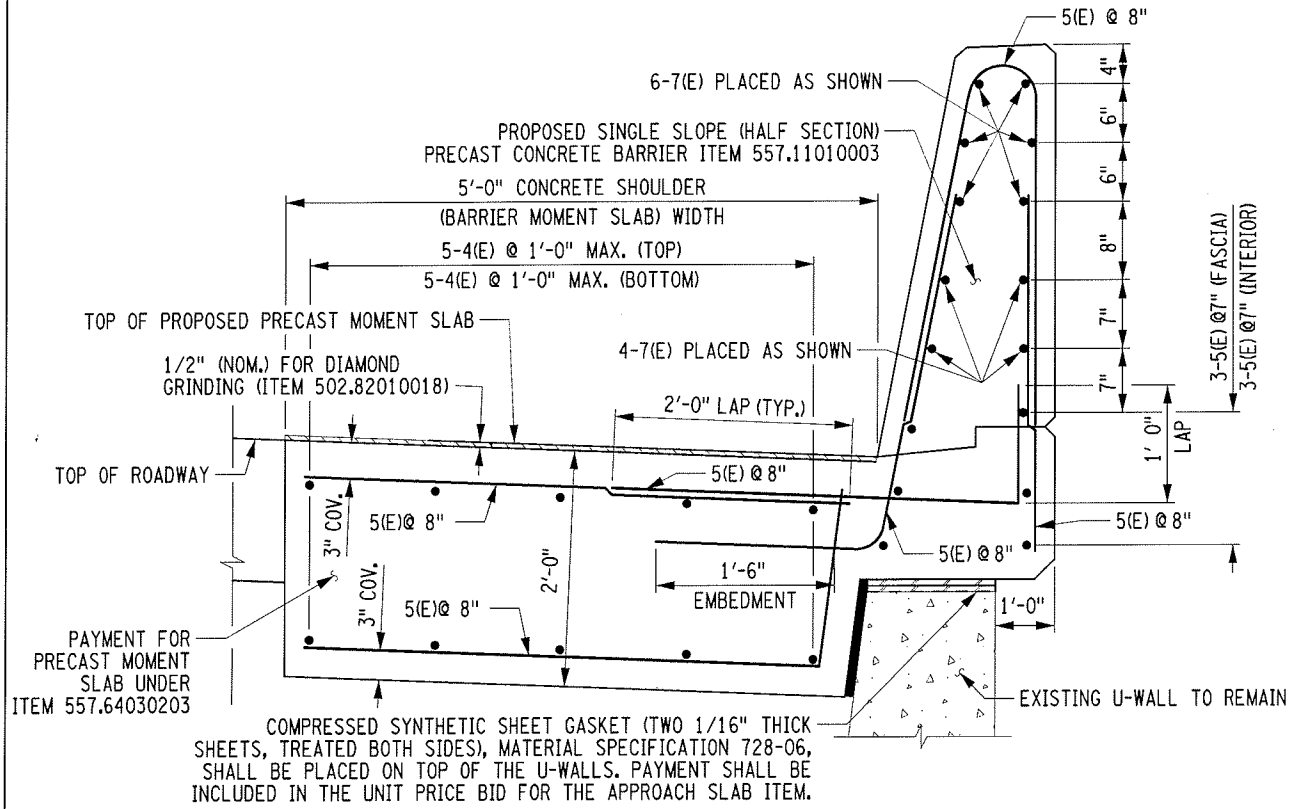

PROPOSED MOMENT SLAB ON EXISTING U-WALL
SECTION A-A

BIN: 1093550
I481 NB /
Connection to I-690 WB

BEGIN ABUTMENT DETERIORATION SKETCH

NOT TO SCALE

DATE: 02/06/2014

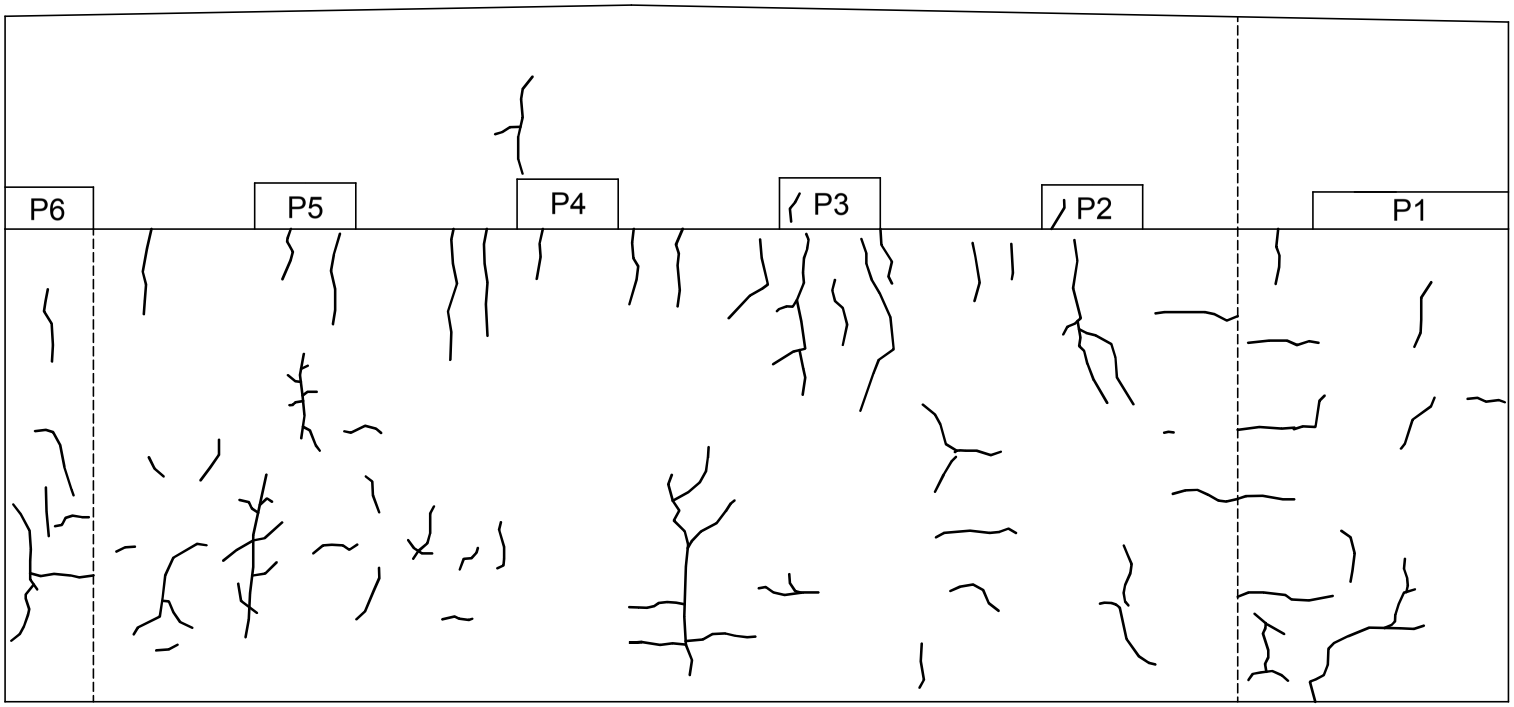

ELEVATION

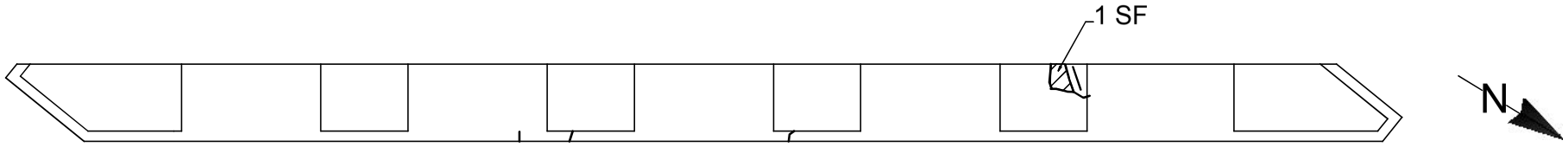

PLAN

LEGEND

Crack

Hollow

BIN: 1093550
I481 NB /
Connection to I-690 WB

END ABUTMENT DETERIORATION SKETCH

NOT TO SCALE

DATE: 02/06/2014

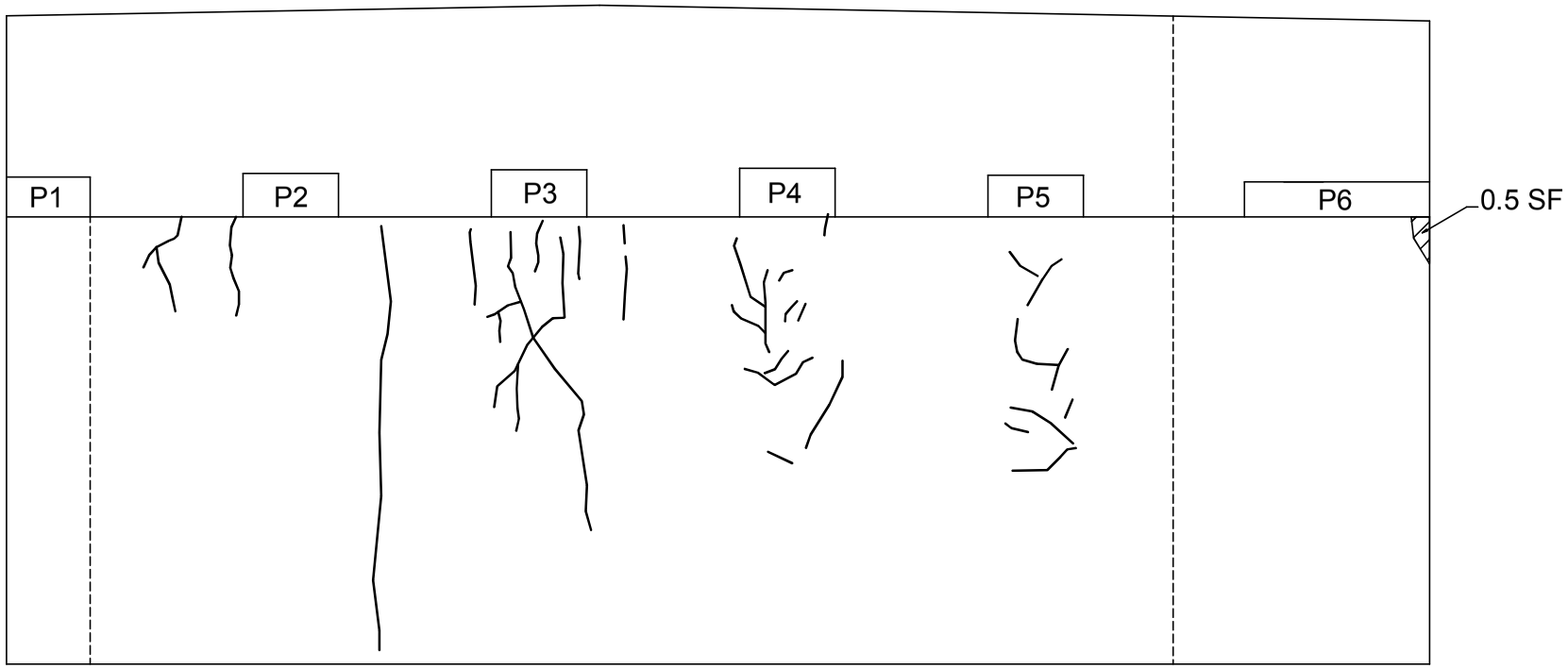

ELEVATION

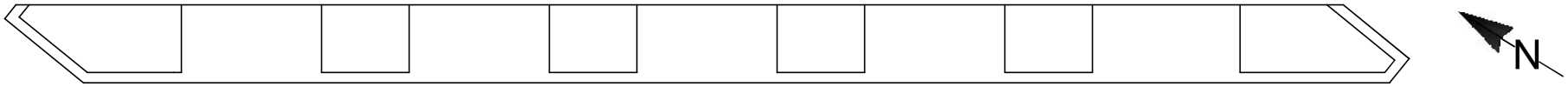

PLAN

LEGEND

Crack

Hollow

IN-DEPTH PHOTO DOCUMENTATION

BIN: 1093550
I481 NB /
Connection to I-690 WB

IN-DEPTH INSPECTION
PHOTO LOCATION SKETCH

DATE: 02/06/2014,
02/24/2014

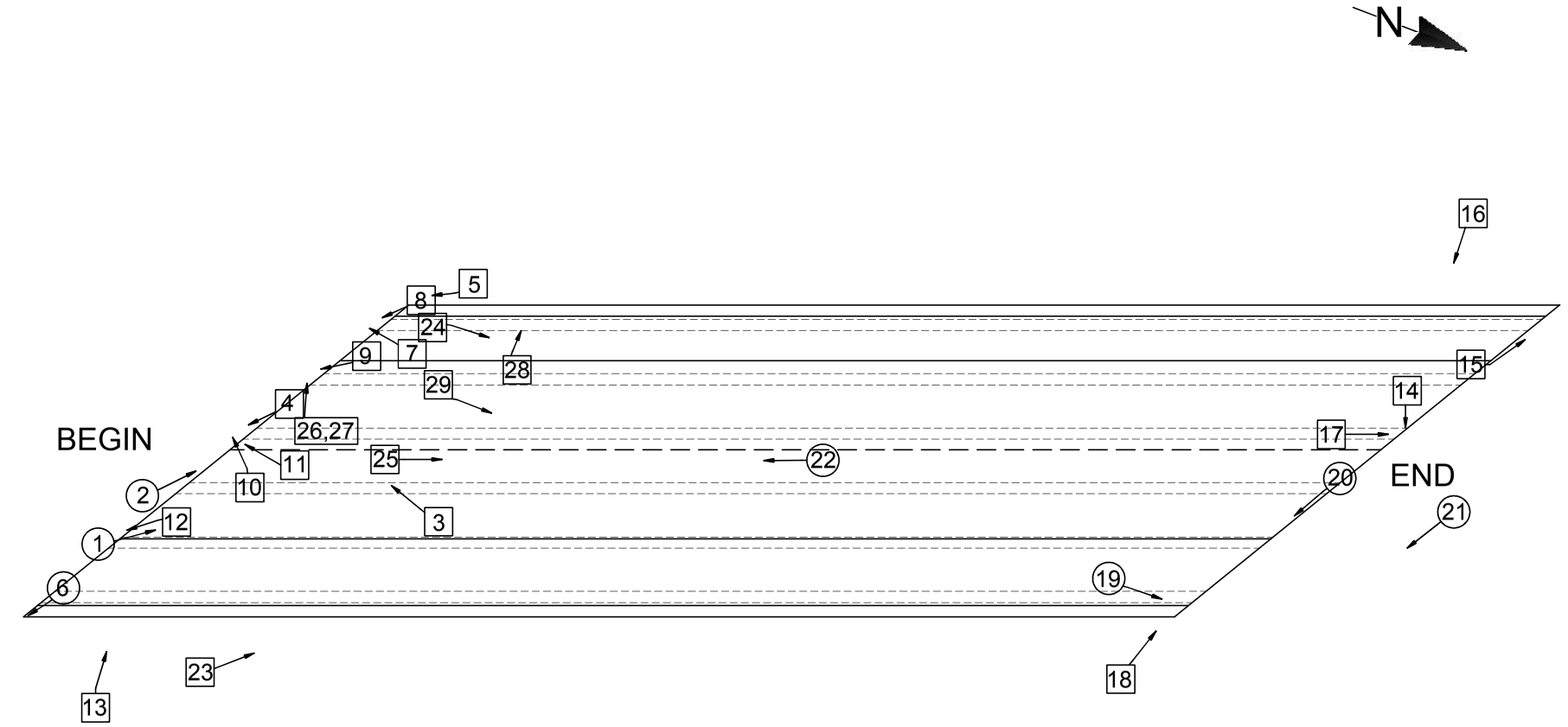

LEGEND

(XX) → Photo Above Deck

[XX] → Photo Below Deck



DESCRIPTION: TOP OF DECK – LOOKING FROM BEGIN TO END

PHOTO 1



DESCRIPTION: BEGIN ABUTMENT JOINT WITH DECK RIGHT LANE– LOOKING FROM RIGHT TO LEFT

PHOTO 2



DESCRIPTION: BEGIN ABUTMENT BACKWALL & STEM - JOINT WITH DECK LEAK

PHOTO 3



DESCRIPTION: BEGIN ABUTMENT BACKWALL - JOINT WITH DECK LEAK AT G3 - LOOKING FROM LEFT TO RIGHT

PHOTO 4



DESCRIPTION: BEGIN ABUTMENT - JOINT WITH DECK LEAK @ LEFT – LOOKING FROM END TO BEGIN

PHOTO 5



DESCRIPTION: BEGIN RIGHT PARAPET BEGIN JOINT WITH DECK LEAK – LOOKING FROM LEFT TO RIGHT

PHOTO 6

In-Depth Inspection Photos I-481 NB over Connection to I-690 WB, BIN 1093550



DESCRIPTION: BEGIN ABUTMENT BEARING B1 - RIGHT SIDE KEEPER

PHOTO 7



DESCRIPTION: BEGIN ABUTMENT BEARING B1– LEFT SIDE

PHOTO 8



DESCRIPTION: BEGIN ABUTMENT PEDESTAL P2– LEFT SIDE

PHOTO 9



DESCRIPTION: BEGIN ABUTMENT PEDESTAL P3– RIGHT SIDE

PHOTO 10

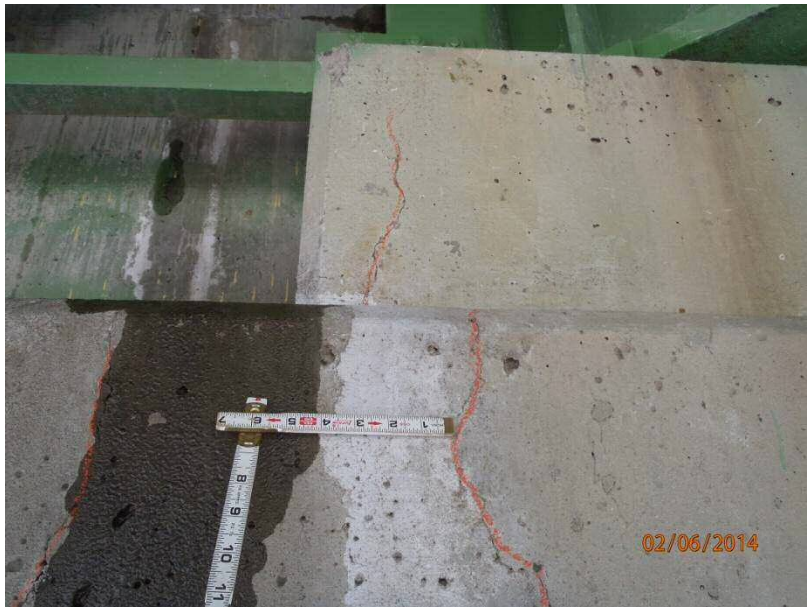

DESCRIPTION: BEGIN ABUTMENT PEDESTAL P3 AT STEM– RIGHT SIDE

PHOTO 11



DESCRIPTION: BEGIN ABUTMENT PEDESTAL P5 – LEFT SIDE

PHOTO 12



DESCRIPTION: BEGIN ABUTMENT STEM– LOOKING FROM RIGHT TO LEFT

PHOTO 13



DESCRIPTION: END ABUTMENT BEARING B3 – LEFT SIDE (TYPICAL OF B1 & B6)

PHOTO 14



DESCRIPTION: END ABUTMENT PEDESTAL P1– RIGHT SIDE

PHOTO 15



DESCRIPTION: END ABUTMENT– LOOKING FROM LEFT TO RIGHT

PHOTO 16



DESCRIPTION: END ABUTMENT STEM BELOW PEDESTAL P3

PHOTO 17



DESCRIPTION: END ABUTMENT STEM AT RIGHT

PHOTO 18



DESCRIPTION: DRAINAGE END RIGHT– LOOKING FROM BEGIN TO END

PHOTO 19



DESCRIPTION: END CONCRETE APPROACH SLAB @ DECK IN RIGHT LANE – LOOKING FROM LEFT TO RIGHT

PHOTO 20



DESCRIPTION: PAVEMENT AT END RIGHT– LOOKING FROM LEFT TO RIGHT

PHOTO 21



DESCRIPTION: DECK MID-SPAN AT CENTER - LOOKING FROM END TO BEGIN

PHOTO 22



DESCRIPTION: RIGHT ELEVATION – PARAPET & FASCIA AT RIGHT– LOOKING FROM BEGIN TO END

PHOTO 23



DESCRIPTION: FRAMING & DECK – LOOKING FROM BEGIN TO END

PHOTO 24

In-Depth Inspection Photos I-481 NB over Connection to I-690 WB, BIN 1093550



DESCRIPTION: DECK AT BAY 3 – LOOKING FROM BEGIN TO END

PHOTO 25



DESCRIPTION: PRIMARY MEMBER GIRDER G2 AT BEGIN - RIGHT SIDE

PHOTO 26



DESCRIPTION: PRIMARY MEMBER GIRDER G2 AT BEGIN - RIGHT SIDE

PHOTO 27



DESCRIPTION: SECONDARY MEMBER DIAGONAL BRACING ANGLE AT GIRDER G1 GUSSET 3 LOOKING FROM RIGHT TO LEFT (SIMILAR AT GIRDER G3 GUSSET 3)

PHOTO 28

In-Depth Inspection Photos I-481 NB over Connection to I-690 WB, BIN 1093550



DESCRIPTION: PRIMARY MEMBER GIRDER G2 AT BEGIN - RIGHT SIDE

PHOTO 29

DESCRIPTION:

PHOTO

ASBESTOS SAMPLING SURVEY

Asbestos Sampling Survey

Location:

BIN 1093550
Interstate Route I-481 North Bound
over NYSDOT Maintenance Ramp

Prepared for:

New York State
Department of Transportation

PIN 3056.13.111

LaBella Project No. 201001

August 2001

Table of Contents

Page

I. Project Summary 1

II. Site Description 1

III. Inspection Procedures 1

IV. Results 2

Certification 2

Figures and Table

I. Project Summary

In accordance with conditions of Term Agreement D012606, LaBella Associates, P.C. conducted an asbestos sampling survey of the Interstate Route I-481 North Bound Bridge over NYSDOT Maintenance Road. Based on laboratory analyses of bulk samples collected, the following material was determined to contain asbestos:

BIN 1093550 – Interstate Route I-481 North Bound over NYSDOT Maintenance Road

Type of Material	Estimated Amount
Sheet Packing	6 Square Meters

II. Site Description

The Site is located in Onondaga County, New York. For the purpose of this report, the Site consists of the Interstate Route I-481 North Bound Bridge over NYSDOT Maintenance Road. (See attached FIGURE 1 - Site Location Map).

III. Inspection Procedures

The following procedures were used to obtain the data for this Report:

A. A review of record drawings supplied by Region 3 personnel and a visual inspection of the subject structure were conducted to identify potential visible/accessible sources of asbestos-containing materials. Observations and notes were made to provide a description of the structure, and an estimate of the approximate amount, length, or area of ACM present.

B. Physical or operational constraints, which might affect the removal of the ACM, were identified and reported.

C. Bulk samples of suspected ACM were collected during the site inspection of the subject structure. Samples were taken from each homogeneous area that may contain ACM.

D. Samples were submitted for analysis. Preliminary PLM analyses of NOB materials were performed by LaBella Laboratories, a NYSDOH approved laboratory, to determine the presence and percentage of asbestos in each sample. TEM analyses of NOB materials, if necessary, were performed by AMA Analytical, Inc.

E. Lab results were used to determine the approximate location, type, and amount of the verified ACM.

F. A drawing of the structure at the Site was created, in order to show sample locations and the approximate locations and amounts of confirmed ACM observed in accessible locations.

Only accessible areas were inspected. Inaccessible areas, such as areas within the bridge or the approaches to the bridge were not included in this inspection. No investigation was conducted by LaBella Associates to determine the presence of underground utilities on or in the immediate vicinity of the Site. Actual sample locations are shown in the attached FIGURE 2. Results of bulk sample analyses are tabulated in the attached TABLE.

IV. Results

BIN 1093550 – Interstate Route I-481 North Bound over NYSDOT Maintenance Road

Sheet Packing

Asbestos-containing sheet packing is located between the top of the abutment and the deck slab at the north end of the bridge only. Most of this material is presently covered by the bridge deck, although the edges of this sheet packing are exposed and visible at various locations.

It is estimated that the total amount of this asbestos-containing sheet packing material on the bridge is approximately 6 square meters. This estimate is based on field measurements taken at the time of the site visit. The approximate location of this asbestos-containing sheet packing is shown in FIGURE 2.

Certification

LaBella Associates, P.C. certifies the accuracy of this report, to the best of our knowledge, based on the information collected as described in the Inspection Procedures Section of this investigation.

HUDSON ENVIRONMENTAL SERVICES, INC.
Mail: 22 Hudson Falls Rd., So. Glens Falls, NY 12803
Delivery: 211 Ferry Blvd., So. Glens Falls, NY 12803
Phone: 518/747-1060 Fax: 518/747-1062

ANALYTICAL TEST RESULTS
N.Y.S.D.O.H. LAB ID#11140
*ANALYZED BY N.Y.S.D.O.H. LAB ID#10898

CLIENT: NYSDOT

SAMPLE DESCRIPTION: See Below

MATRIX: Solid

LOCATION: BIN 1093550

H.E.S. #: See Below

DATE SAMPLED: 04/01/03

TIME SAMPLED: 2:00 PM

DATE SAMPLE RECD: 04/14/03

TYPE SAMPLE: Grab

SAMPLER: G.Cook/NYSDOT

NOB BULK MATERIAL ANALYSIS FOR ASBESTOS

HES LAB ID#: 030414H	H01	H02	H03
LAB ID#: E03	913	914	915
CLIENT: SAMPLE ID/DESCRIPTION	1093550-01 G1, @ Rt Flange 3rd diaphram	1093550-02 G2, Rt Flange @ midpoint	1093550-03 G3, @ left Flange @ mid point struture
COLOR	Green	Green	Green
HOMOGENEOUS(YES/NO)	Yes	Yes	Yes
ORGANIC %	48	47	49
ACID-SOLUBLE INORGANICS %	13	13	13
INSOL NON-ASBESTOS INORGANIC %	39	40	38
ASBESTOS ANALYSIS			
CHRYSOTILE %			
AMOSITE %			
CROCIDOLITE %			
OTHER AMPHIBOLE %			
TOTAL ASBESTOS % (PLM)	ND	ND	ND
ASBESTOS ANALYSIS			
TYPE OF ASBESTOS			
PERCENTAGE OF ASBESTOS (TEM)	ND	ND	ND
TOTAL	100	100	100

Approval By: [signature]

Date: 4/23/03

Hudson Environmental Services, Inc. certifies that the services provided were performed in accordance with the New York State Department of Health, Environmental Laboratory Approval Program certification manual. In the event of an error, HES's sole responsibility will be to perform reanalysis at its own expense. HES, Inc. assumes no other liability for damages incurred from the interpretation or use of the analysis provided.

(OVER)

HUDSON ENVIRONMENTAL SERVICES, INC.

Mail: 22 Hudson Falls Road, South Glens Falls, NY 12803
Delivery: 211 Ferry Blvd., South Glens Falls, NY 12803
Phone: 518/747-1060 Fax: 518/747-1062

HES

CHAIN OF CUSTODY RECORD/ Lab Work Request

Client NYS Dept. of Transportation-Region 3
Client Contact/Person # Christopher Anderson
Project Location B.I.N.
Purchase Order
HES Contact William Frawley

Mail Address NYS Dept. of Transportation
333 E. Washington Street
Syracuse, NY 13202
Phone # (315) 428-4628

HES Use Only Lab ID	Sample ID / Description	Date Collected	TIME A=a.m. P=p.m.	SAMPLE TYPE C=Composite G=Grab MATRIX	C	G	# Conts.	ANALYSIS REQUIRED
030414H01	1093550, 01, G1, @		A P	SO		X	1	Asbestos Bulk - NOB
	Rt flange, 3RD diaphram		A P					
H02	1093550, 02, G2,		A P	SO		X	1	" " "
	Rt flange, at midpoint		A P					
H03	1093550, 03, G5,		A P	SO		X	1	" " "
	LEFT flange, at midpoint		A P					
	Structure		A P					
			A P					

Matrix: S - Soil, SE - Sediment, SO - Solid, SL - Sludge, O - Oil, DW - Drinking Water, GW - Ground Water, SW - Surface Water, L - Leachate, A - Air, WI - Wipe, DS - Drum Solids, DL - Drum Liquids, X - Other, WW - Waste Water

Special Instructions: Bridge coating - If PLM negative, TEM confirmation on all.

Sampled by: (Signature) Gary W Cook	Date/Time 4/01/03, 2:00 p	Received by: (Signature) [signature]	Date/Time 4-16-03 12:30 PM
Relinquished by: (Signature)	Date/Time	Received by: (Signature)	Date/Time
Relinquished by: (Signature)	Date/Time	Received by: (Signature)	Date/Time
Dispatched by: (Signature)	Method of Shipment:		Date/Time
Received @ Laboratory [signature]	Date/Time 4/14/03 1:55PM	Turnaround Time: NORMAL	Lab Approval:

HES Use Only

Samples Were: 1. Shipped or Hand Delivered NOTES:
2. Ambient or Chilled NOTES:
3. Received Broken/Leaking (Improperly Sealed) Y N NOTES:
4. Properly Preserved NOTES: Y N
5. Received Within Holding Times Y N NOTES:

COC Tape Was: 1. Present on Outer Package Y N
2. Unbroken on Outer Package Y N
3. Present on Sample Y N
4. Unbroken on Sample NOTES: Y N

COC Record Was: 1. Present upon Receipt of Samples Y N

Discrepancies Between Sample Labels and COC Record? Y N NOTES:

WHITE - Lab Copy YELLOW - Sampler Copy PINK - Generator Copy

LATEST BIENNIAL INSPECTION REPORT

Inspection Date: 4/26/2011 RC: 33 BIN: 1093550

Bridge Ratings

Carried: 481I 481I33012060 Crossed: W.B.CONN. CheckValue: 1,764,396,296

Inspection Agency: 10 - NYSDOT Type of Inspection: 1 - BIENNIAL
GTMS: 302 -- Steel - Stringer/Multi-Beam or Girder
POSTINGS: See Gen Rec Page 1 for Postings at time of inspection.
Further Investigation Needed: No
State Highway Number: 70-7 Milepoint: 6.83 AADT/Yr: 44755 / 2008
Orientation: 8 - Northwest Political Unit: 0233 - Town of DEWITT Year Built: 1972
Total Spans: 1 Ramp Bridge Attached To Span: NA BIN: NA
General Recommendation: 5 Computed Condition Rating: 4.422

Abutment Ratings:	**Beg Abut**	**End Abut**
Joint with Deck	1	8
Bearings, Bolts, Pads	5	3
Seats and Pedestals	5	5
Backwall	5	5
Stem (Breastwall)	5	5
Erosion or Scour	5	5
Footings	9	9
Piles	9	9
Recommendation	5	5

Wingwall Ratings:	**Beg Abut**	**End Abut**
Walls	5	4
Footings	9	9
Erosion or Scour	6	6
Piles	9	9

Channel Ratings:	**Channel**
Stream Alignment	8
Erosion and Scour	8
Waterway Opening	8
Bank Protection	8

Approach Ratings:	**Approaches**
Drainage	5
Embankment	5
Settlement	4
Erosion	4
Pavement	4
Guide Railing	5

Number of Flags Issued:

RED: 0 Yellow: 0 Safety: 1

Vulnerability Reviews Recommended: 1=Yes, 2=No, 3=NA, X=NotActive

Hydraulic: 3	Overload: X	Steel: 1
Collision: 2	Concrete: X	Seismic: X

Inspector's Signature: CheckValue: 1,764,396,296 Date: 4/26/2011

David Hann,PE () (Inspector ID:3000055)

Signed copy of this inspection report is available in the appropriate NYSDOT Regional Office

Reviewed By: Date: 6/1/2011

James R. Manning,PE () (QC ID:3000023)

Signed copy of this inspection report is available in the appropriate NYSDOT Regional Office

Inspection Date: 4/26/2011 RC: 33 BIN: 1093550

Span Ratings

Carried: 481I 481I33012060 Crossed: W.B.CONN. CheckValue: 1,764,396,296

Deck Element Ratings:	**001**
Wearing Surface	4
Curbs	5
Sidewalks, Fascias	4
Railings, Parapets	5
Scuppers	8
Gratings	8
Median	8
Mono Deck Surface	5

Superstructure Ratings:	**001**
Structural Deck	4
Primary Members	6
Secondary Members	5
Paint	7
Joints	8
Recommendation	5

Pier Ratings:	**001**
Bearings, Bolts, Pads	8
Pedestals	8
Top of Cap or Beam	8
Stem Solid Pier	8
Cap Beam	8
Pier Columns	8
Footings	8
Erosion or Scour	8
Piles	8
Recommendation	8

Utility Ratings:	**001**
Lighting	8
Sign Structure	8
Utilities and Support	8

Field Notes:

Field Date	Arrival	Departure	Temp (C)	Temp (F)	Weather Conditions
4/26/2011	7:45:00 AM	10:45:00 AM		55	Mostly cloudy

Inspection Date: 4/26/2011 RC: 33 BIN: 1093550

Inspection Notes

Carried: 481I 481I33012060 Crossed: W.B.CONN. CheckValue: 1,764,396,296

Note ID: 351110935500000

Beg Abut -- Abutment: Joint with Deck -- Rated 1, Was 6
Referenced Photos: "1", "2"
2011 - The begin joint trough is full of debris and the downspout through the stem (left and right side) is completely plugged. This is allowing the water to saturate the bridge below. The outflow pipe at the bottom of the stem has no water flowing out of it.

Note ID: 351110935500001

Beg Abut -- Abutment: Bearings, Bolts, Pads -- Rated 5, Was 6
End Abut -- Abutment: Bearings, Bolts, Pads -- Rated 3, Was 5
Referenced Photos: "3", "4", "5"
2011 - End bearings 1,3,6 have the left anchor bolts sheared away. Bearings 1 and 3 have a left side plate welded to the bearing. Brg 1 has that bolt sheared away also, but brg 3 still is solid.

The begin right side keeper plate for brg 4 is slightly bent outwards.

Note ID: 351110935500003

Approaches: Settlement -- Rated 4, Was 5
Approaches: Pavement -- Rated 4, Was 4
Referenced Photos: "8"
2011 - The begin pavement is slightly mapcracked. The end pavement is mapcracked and breaking up next to the end of bridge approx. up to 1.5'. This area is depressed and causing tire slapping. The asphalt is also pulling away next to the end of bridge. The end abutment underneath completely saturated, therefore this pavement joint is heavily leaking to below.

Note ID: 351110935500004

Approaches: Erosion -- Rated 4, Was 5
Referenced Photos: "9"
2011 - The end left has an erosion gully at the end of the granite curb runout. The asphalt is sloughing off. The area is approx. 3' wide by 1' deep.

Note ID: 351110935500005

Span 001 -- Deck Elements: Wearing Surface -- Rated 4, Was 5
Referenced Photos: "10"
2011 - The entire wearing surface has several hairline transverse cracks throughout.

Note ID: 351110935500006

Span 001 -- Deck Elements: Sidewalks, Fascias -- Rated 4, Was 4
Referenced Photos: "11"
2011 - The begin left joint area has a small area of the fascia spalled away, other areas ok.

Inspection Date: 4/26/2011 RC: 33 BIN: 1093550

Inspection Notes

Carried: 481I 481I33012060 Crossed: W.B.CONN. CheckValue: 1,764,396,296

Note ID: 351110935500007

Span 001 -- Superstructure: Structural Deck -- Rated 4, Was 5
Referenced Photos: "12", "13"
2011 - The deck underneath has mapcracks throughout the bays. The worst area is the end left, bay 1, for approx. the last 25'. The deck is delaminated, cracked, and hollow. This area can fall on vehicles below and therefore is being safety flagged.

Note ID: 351110935500009

Span 001 -- Superstructure: Secondary Members -- Rated 5, Was 6
Referenced Photos: "14"
2011 - Just as a reference, one secondary member at the begin left, bay 1, starting from gusset plate 3 on G1, has been bent several years ago. No other significant problems.

Note ID: 351110935500008

Span 001 -- Superstructure: Paint -- Rated 7, Was 3
Referenced Photos: "15"
2011 - The bridge has been painted under conctract D261209.

Note ID: 351110935500002

End Abut -- Wingwalls: Walls -- Rated 4, Was 4
Referenced Photos: "6", "7"
2011 - The end right wingwall is spalled down behind the vertical rebar full height on the inside edge. The spalling is continuing down into the lower portion of the wingwall. The end left lower portion of wingwall is hollow sounding near the stem/wingwall intersection.

Inspection Date: 4/26/2011 RC: 33 BIN: 1093550

Inspection Photos in Photo Number Order

Carried: 481I 481I33012060 Crossed: W.B.CONN. CheckValue: 1,764,396,296

Begin Joint, looking from right to left



Photo Number: 1 Photo Filename: 11BegJoint.jpg

Begin Right Joint Down Spout



Photo Number: 2 Photo Filename: 11BegJt.jpg

Inspection Date: 4/26/2011 RC: 33 BIN: 1093550

Inspection Photos in Photo Number Order

Carried: 481I 481I33012060 Crossed: W.B.CONN. CheckValue: 1,764,396,296

End Bearing #6



Photo Number: 3 Photo Filename: 11EndBrg6.jpg

End Bearing #3

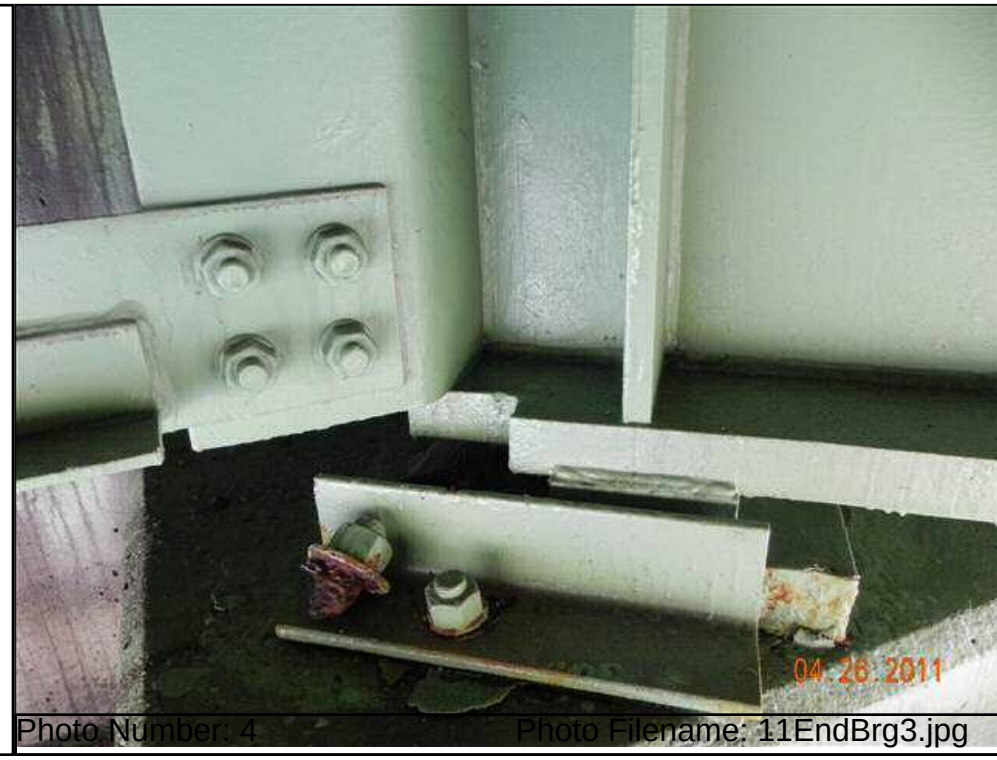

Photo Number: 4 Photo Filename: 11EndBrg3.jpg

Inspection Date: 4/26/2011 RC: 33 BIN: 1093550

Inspection Photos in Photo Number Order

Carried: 481I 481I33012060 Crossed: W.B.CONN. CheckValue: 1,764,396,296

End Bearing #1



Photo Number: 5 Photo Filename: 11EndBrg1.jpg

End Right Wingwall



Photo Number: 6 Photo Filename: 11EndRtWW.jpg

Inspection Date: 4/26/2011 RC: 33 BIN: 1093550

Inspection Photos in Photo Number Order

Carried: 481I 481I33012060 Crossed: W.B.CONN. CheckValue: 1,764,396,296

End Left Wingwall



Photo Number: 7 Photo Filename: 11EndLtWW.jpg

End Pavement and Settlement

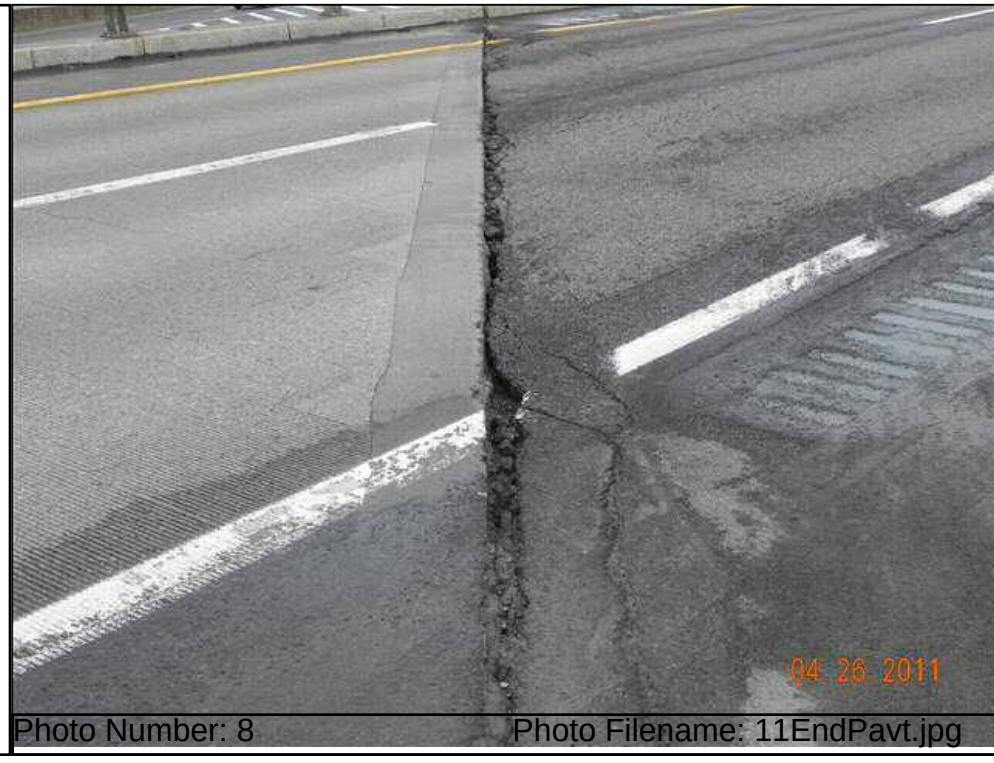

Photo Number: 8 Photo Filename: 11EndPavt.jpg

Inspection Date: 4/26/2011 RC: 33 BIN: 1093550

Inspection Photos in Photo Number Order

Carried: 481I 481I33012060 Crossed: W.B.CONN. CheckValue: 1,764,396,296

End Left Erosion



Photo Number: 9 Photo Filename: 11EndLtErosion.jpg

Wearing Surface (typ)



Photo Number: 10 Photo Filename: 11WS.jpg

Inspection Date: 4/26/2011 RC: 33 BIN: 1093550

Inspection Photos in Photo Number Order

Carried: 481I 481I33012060 Crossed: W.B.CONN. CheckValue: 1,764,396,296

Begin Left Fascia



Photo Number: 11 Photo Filename: 11BegLtFascia.jpg

Deck End of Bay One



Photo Number: 12 Photo Filename: 11DeckBay1.jpg

Inspection Date: 4/26/2011 RC: 33 BIN: 1093550

Inspection Photos in Photo Number Order

Carried: 481I 481I33012060 Crossed: W.B.CONN. CheckValue: 1,764,396,296

Deck End of Bay One



Photo Number: 13 Photo Filename: 11DeckBay1b.jpg

Bay - 1 Diaphragm



Photo Number: 14 Photo Filename: 11BayDia.jpg

Inspection Date: 4/26/2011 RC: 33 BIN: 1093550

Inspection Photos in Photo Number Order

Carried: 481I 481I33012060 Crossed: W.B.CONN. CheckValue: 1,764,396,296

Paint



Photo Number: 15 Photo Filename: 11Paint.jpg

No Photo

Inspection Date: 4/26/2011 RC: 33 BIN: 1093550

Inspection Sketches in Sketch SysID Order

Carried: 481I 481I33012060 Crossed: W.B.CONN. CheckValue: 1,764,396,296

Sketch ID: 351110935500000 Sketch Filename: LdRat.11

General Sketch for Bridge
Referenced Photos:

LOAD RATING FIELD CHECK FORM

Region 3 LoadRatingFieldCheckForm

NYSDOT BRIDGE INSPECTION REPORT			
SHEET	1	OF	1

LOAD RATING FIELD CHECK FORM

BIN:	33-1093550	Insp. Date:	04/26/2011

Dead Load - Note Changes since Last load Rating or state "NONE":

None

Section Loss - Note locations and amount of loss on each girder or state "NONE":

No change

Additional Notes:

Bridge painted

Attachments:

None

Team Leader: Dave Hann

Inspection Date: 4/26/2011 RC: 33 BIN: 1093550

Inspection Sketches in Sketch SysID Order

Carried: 481I 481I33012060 Crossed: W.B.CONN. CheckValue: 1,764,396,296

Sketch ID: 351110935500001 Sketch Filename: SDVA_REV.11

General Sketch for Bridge
Referenced Photos:

Steel Details Vulnerability Assesment (SDVA) Review

2/98

NYSDOT BRIDGE INSPECTION REPORT
SHEET __1__ OF __1__

Steel Details Vulnerability Assesment (SDVA) Review*

Carried:	**481I 481I33012060**		**BIN:**	**1093550**
Crossed:	**W.B.CONN.**		**Insp. Date:**	**04/26/2011**
ATL:	**Grabosky, Steve Assistant Team Leader**		**Inspector:**	**Hann, David**

Owner _____ Existing SDVA Rating _____ Existing SDVA Rating Date_____

		Yes	No
1.	Since the last assessment, were there any modifications to the steel superstructure or steel substructure ?		**X**
2.	Since the last assessment, is there any reason to suspect a significant increase in the Avg. Daily Truck Traffic (AADT)?		x
3.	Since the last assessment, have any structural flags been issued for metal cracking, corrosion or metal impact damage? (If, yes, attach copy)		x
4.	Since the last assessment is there any **new** evidence of metal cracking ?		x
5.	Since the last assessment, has the condition rating dropped to 3 or below for the following elements (or raised from a 3 or below, to a 4 or higher):	x	
	a) Paint on a primary member ? (Form TP350g, column 30)	x	
	b) Deck elements recommendation ? (Form TP350g, column 27)	x	
	c) Joints ? (Form TP349n, column 22 or 23 or Form TP350g, column 31)	x	
	d) Primary member ?		x
	Steel Superstructure (Form TP350g, column 28)		x
	Steel Substructure - Rigid frames (Form TP349n, columns 30 & 31)		x
	Steel Pier capbeams (Form TP350g, column 37)		x
	e) Drainage ? (Form TP350g, column 23 [scuppers] or column 24 [gratings])		x
	f) Bearings ? (Form TP349n, column 24 or 25 or TP350g, column 33)	x	

Comments (Explain, or reference, "Yes" answers to inspection report and note other things of possible significance)

Bridge has been painted under D261209. The end bearings 1,3,5 have sheared left anchor bolts. The end left deck, bay 1 has the last approx. 25' delaminated and hollow, with the rest of deck mapcracked.

Quality Control Engineer _____ (Init.) **Date** _____

Does the Regional Bridge Evaluation Engineer (RBEE) recommend follow-up action? ___ No ___ Yes
If Yes, Explain _____

_____ (RBEE Signature) _____ (Date)

Inspection Date: 4/26/2011 RC: 33 BIN: 1093550

Inspection Sketches in Sketch SysID Order

Carried: 481I 481I33012060 Crossed: W.B.CONN. CheckValue: 1,764,396,296

Sketch ID: 351110935500001 Sketch Filename: SDVA_REV.11

General Sketch for Bridge
Referenced Photos:

Steel Details Vulnerability Assesment (SDVA) Review

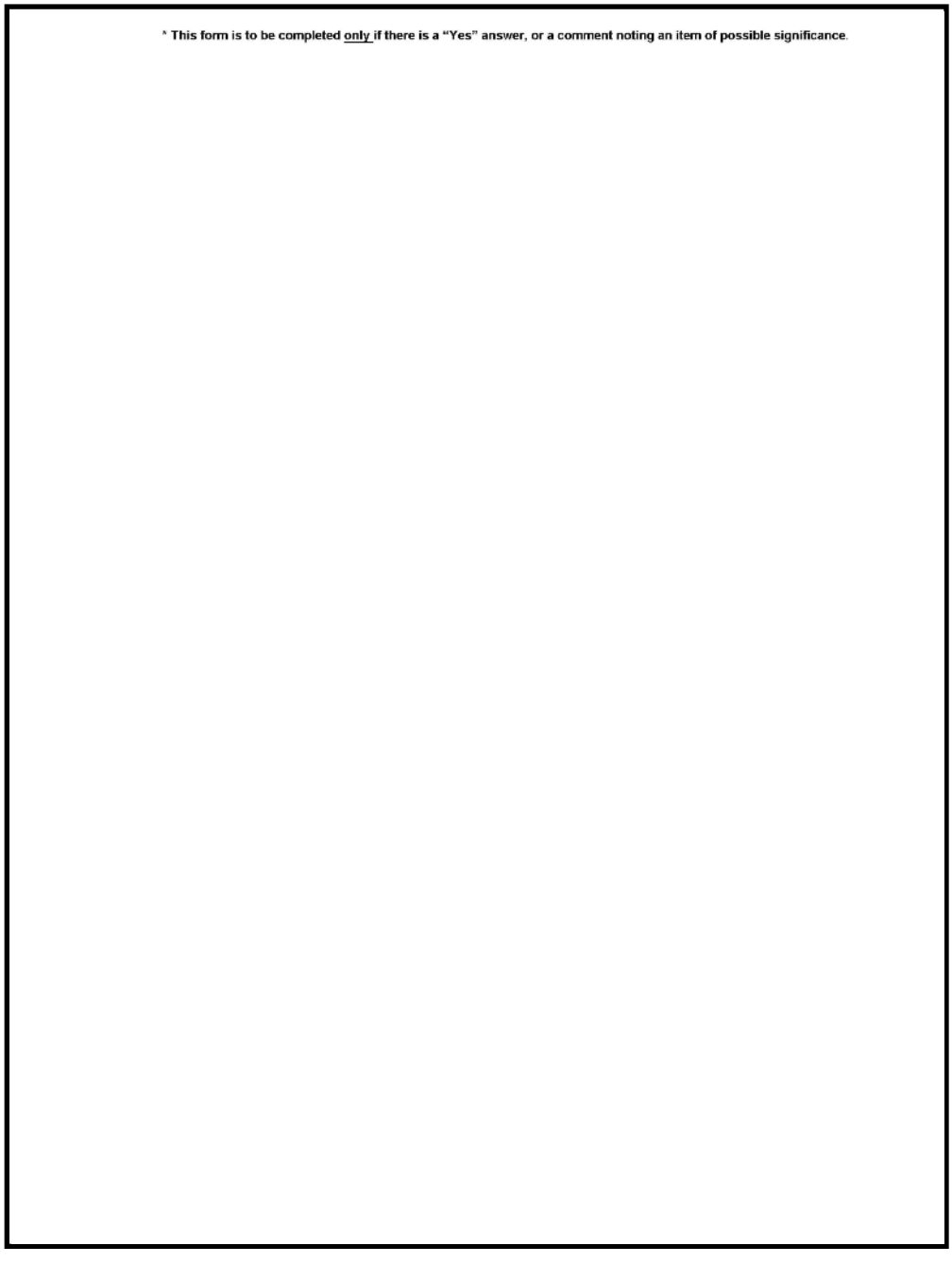

Inspection Date: 4/26/2011 RC: 33 BIN: 1093550

Gen. Rec., Postings, Federal Ratings, etc.

Carried: 481I 481I33012060 Crossed: W.B.CONN. CheckValue: 1,764,396,296

Overall Condition:

GENERAL RECOMMENDATION: 5

Computed Condition Rating: 4.422

Problems Requiring Action:

NO Further Investigation Needed

SAFETY Flag(s) Issued

POSTINGS:

Inspector Confirmed existing Posting data as correct.
Posted Vertical Clearance ON the bridge is: No Posting
Posted Vertical Clearance UNDER the bridge is: No Posting
No Load Restriction is posted on this bridge

Overloads Observed:

NO Overload Vehicles were observed on this bridge

FEDERAL RATINGS:

NBI Deck Condition: 4
NBI Superstruct Condition: 6
NBI Substruct Condition: 5
NBI Channel Condition: N
NBI Culvert Condition: N

Diving Inspection Needs:

Diving Inspection Required? No Date of Last Diving Inspection: No Date

Inventory Problems:

Inventory Problems Exist? No

Miscellaneous:

Time Required to Inspect Bridge: 3 Hours

Lane Closure Needs: None Required

No Railroad Flagging Required

No Pedestrian Fence

No Snow Fence

The BIN Plate is in OK condition

Inspection Date: 4/26/2011 RC: 33 BIN: 1093550

Gen. Rec., Postings, Federal Ratings, etc.

Carried: 481I 481I33012060 Crossed: W.B.CONN. CheckValue: 1,764,396,296

Special Emphasis Inspection Required:

Non-Redundant/Fracture Critical Members - No
Pin and Hangers - No
Fatigue-Prone Welds - Yes
Non-Categorized Fatigue-Prone Details - No
Other (Specified in Text) - No

Special Emphasis Details:

Gusset plate welds 100% hands-on inspection is exempt until 2015.

General Notes To the Next Inspector:

Bin plate is on the end abutment.

Improvements Observed:

Bridge has been painted under D261209.

Inspection Date: 4/26/2011 RC: 33 BIN: 1093550

Review Progress and Personnel Present at Inspection

Carried: 481I 481I33012060 Crossed: W.B.CONN. CheckValue: 1,764,396,296

Inspection Submission Status:

Submitted to QC Engineer on: 5/31/2011
QC Submission Number: 55310201

QC Review Completed: 6/1/2011
QC Engineer: James R. Manning

Submitted to Liaison Engineer on: 6/2/2011
Liaison Submission Number: 53105

Liaison Review Completed: 6/3/2011
Liaison Engineer: TODD M. HERMANN

Submitted for BIIS Processing on: 6/3/2011
BIIS Submission Number: .kp1

Current Status: Keypunched, Sent to BIIS
Check Value: 1,764,396,296

Personnel Present During Inspection:

David Hann - Team Leader
Steve Grabosky - Assistant Team Leader

Discovery Date: 4/26/2011 RC: 33 BIN: 1093550

Safety Flag 35110008

Carried: 481I 481I33012060 Crossed: W.B.CONN.

Prompt Interim Action Recommended: No

Inspector: Hann, David
Flag Number: 35110008
Date Discovered: 4/26/2011
Supersedes Flag Number: _____

Bridge Description:
BIN: 1093550 Carried: 481I 481I33012060 Crossed: W.B.CONN.

Region: 3 - Syracuse County: 3 - Onondaga
Political Unit: 0233 - Town of DEWITT
Residency Code: - N/A
Primary Owner: 10 - State Department of Transportation
Secondary Owner: 99 - One Agency - Listed in first subfield
Primary Maintenance: 10 - State - Highway Maintenance
Secondary Maintenance: 99 - One Agency - Listed in first subfield
Year Built: 1972 Not Posted For Load

Number of Spans by Type:

Num	Type	Description
001	113	Steel - Plate Girder, Multi-Girder

Bridge is wholly or partially owned or maintained by NYSDOT.

Description of Flagged Condition:
Orientation: Northwest
Span #: 1
Component (TP349/350): TP350 - #27 - underdeck
Rating: 4

2011 - The deck area at the end left, bay 1, for approx. the last 25' is delaminated, cracked, and hollow. This area can fall on vehicles below and therefore is being safety flagged.

1 Photos/Sketches Attached

Verbal Notifications: (For RED Flags and Safety Flags with PIA only)

To: _____ of Regional Office on _____ at _____

Signature: (a signed copy of this report will be placed in the BIN folder)
Flagged Bridge Report Completed By: Hann, David on 4/26/2011
Flagged Bridge Report Signed By: _____ on _____
Hann, David

(This PDF Report Created: 6/6/2011 8:43:20 AM)

Discovery Date: 4/26/2011 **RC: 33 BIN: 1093550**

Safety Flag 35110008 Attachment

Carried: 481I 481I33012060 Crossed: W.B.CONN.

11DeckBay1b.jpg - Attached to Safety Flag 35110008

Deck, end of Bay - 1



Inspection Date: 4/26/2011 RC: 33 BIN: 1093550

Inspection Access Requirements

Carried: 481I 481I33012060 Crossed: W.B.CONN. CheckValue: 1,764,396,296

Equipment Required for Inspection

No Access Requirement Changes Noted During This Inspection.
This Listing is from the Inventory Database.

ACCESS CATEGORIES FOR ENTIRE BRIDGE
Required: Walking, Extension Ladder, Small Lift

ACCESS CATEGORIES FOR SPAN 1
Required: Walking, Extension Ladder, Small Lift

Inspection Date: 4/26/2011 RC: 33 BIN: 1093550

Culvert Measurements

Carried: 481I 481I33012060 Crossed: W.B.CONN. CheckValue: 1,764,396,296

Culvert Measurements

NO CULVERT DATA FOR BIN 1093550

Standard Photos **RC: 33 BIN: 1093550**

Carried: 481I 481I33012060 Crossed: W.B.CONN.

1093550_LOCATION_MAP.JPG

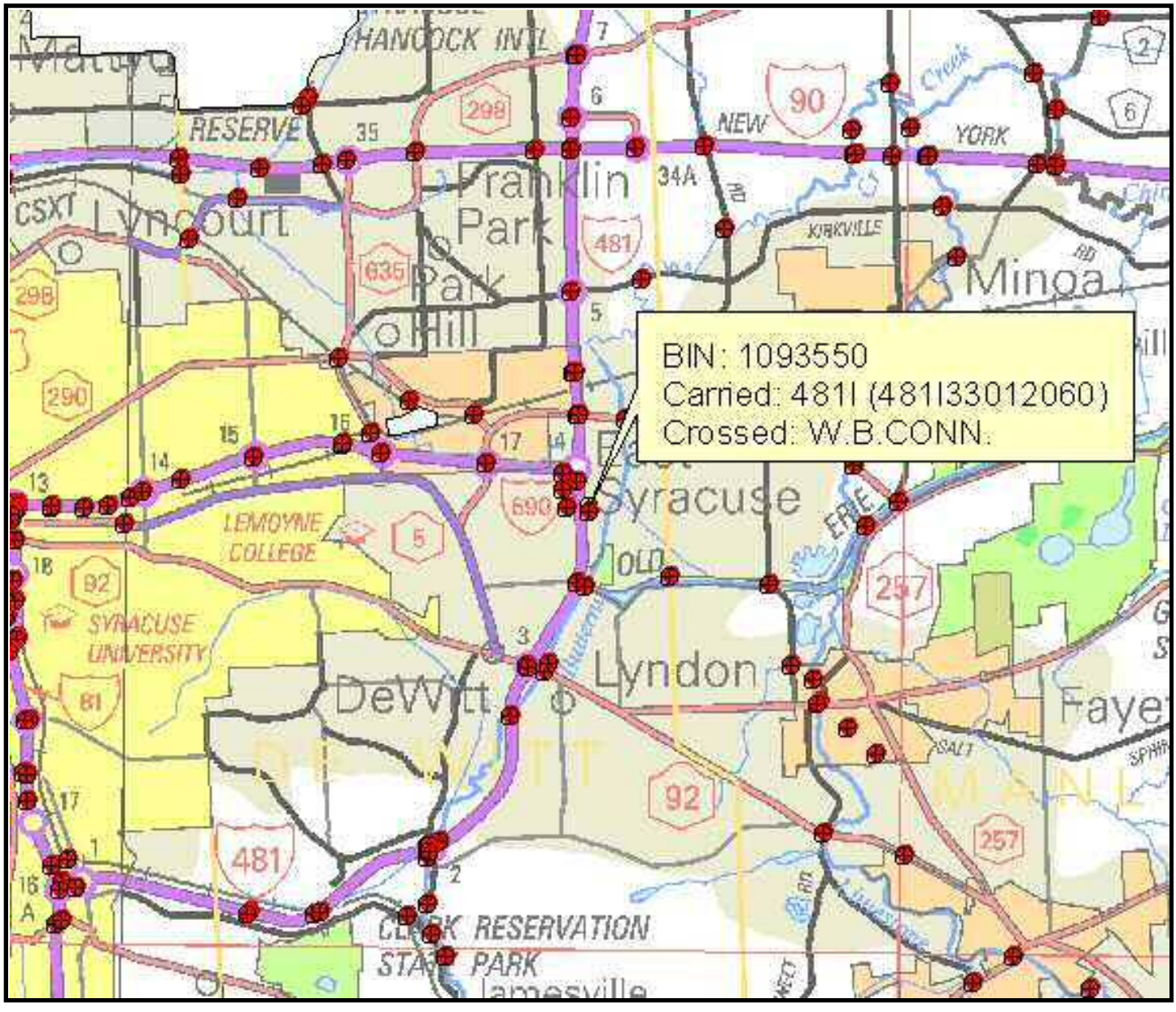

Standard Photos **RC: 33 BIN: 1093550**

Carried: 481I 481I33012060 Crossed: W.B.CONN.

1093550_QUAD_MAP.JPG

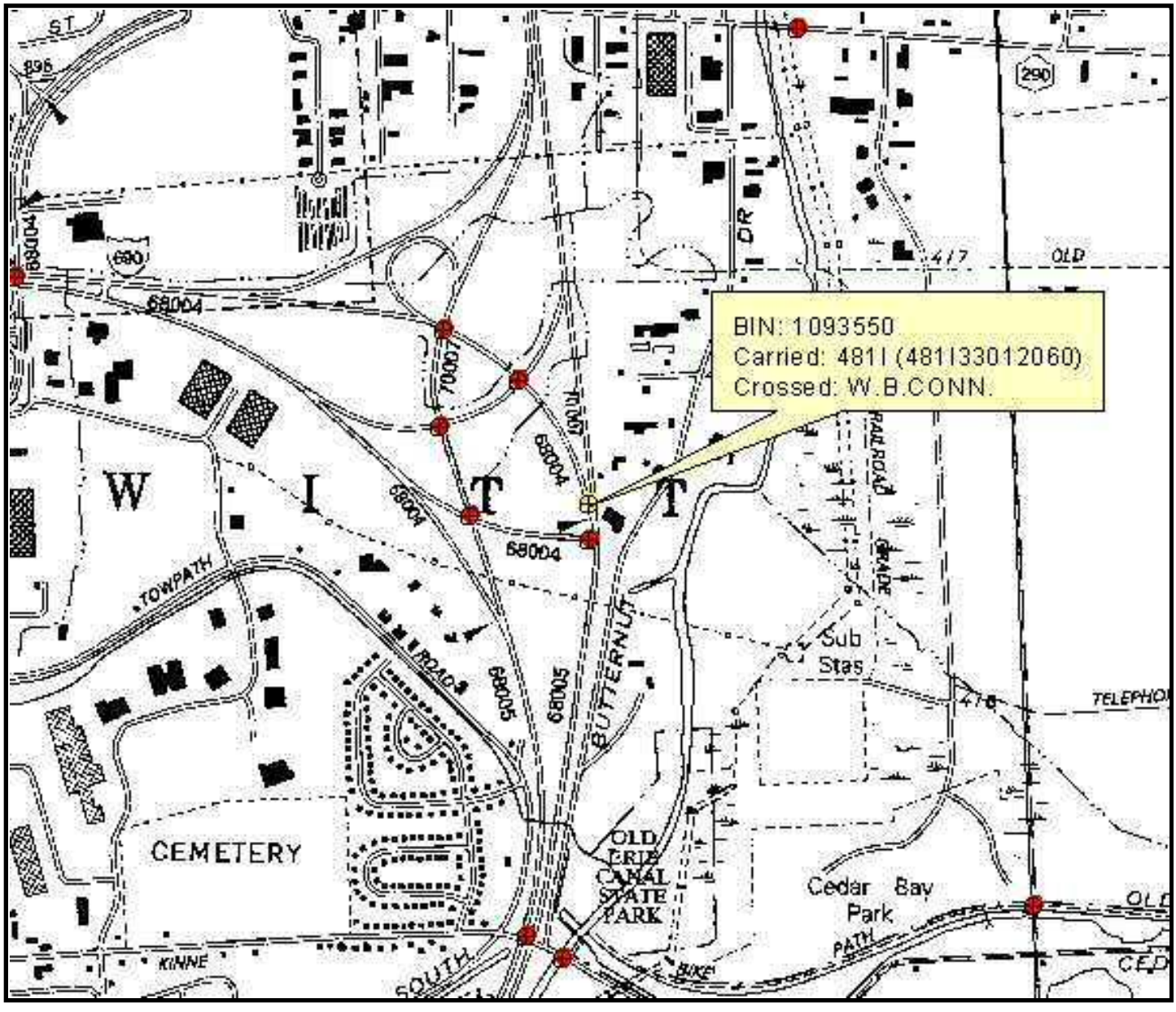

Standard Photos **RC: 33 BIN: 1093550**

Carried: 481I 481I33012060 Crossed: W.B.CONN.

11Begin Approach.jpg



11EndAbutment.jpg



Standard Photos **RC: 33 BIN: 1093550**

Carried: 481I 481I33012060 Crossed: W.B.CONN.

11EndApproach.jpg



Standard Photos **RC: 33 BIN: 1093550**

Carried: 481I 481I33012060 Crossed: W.B.CONN.

11EndLtWingwall.jpg

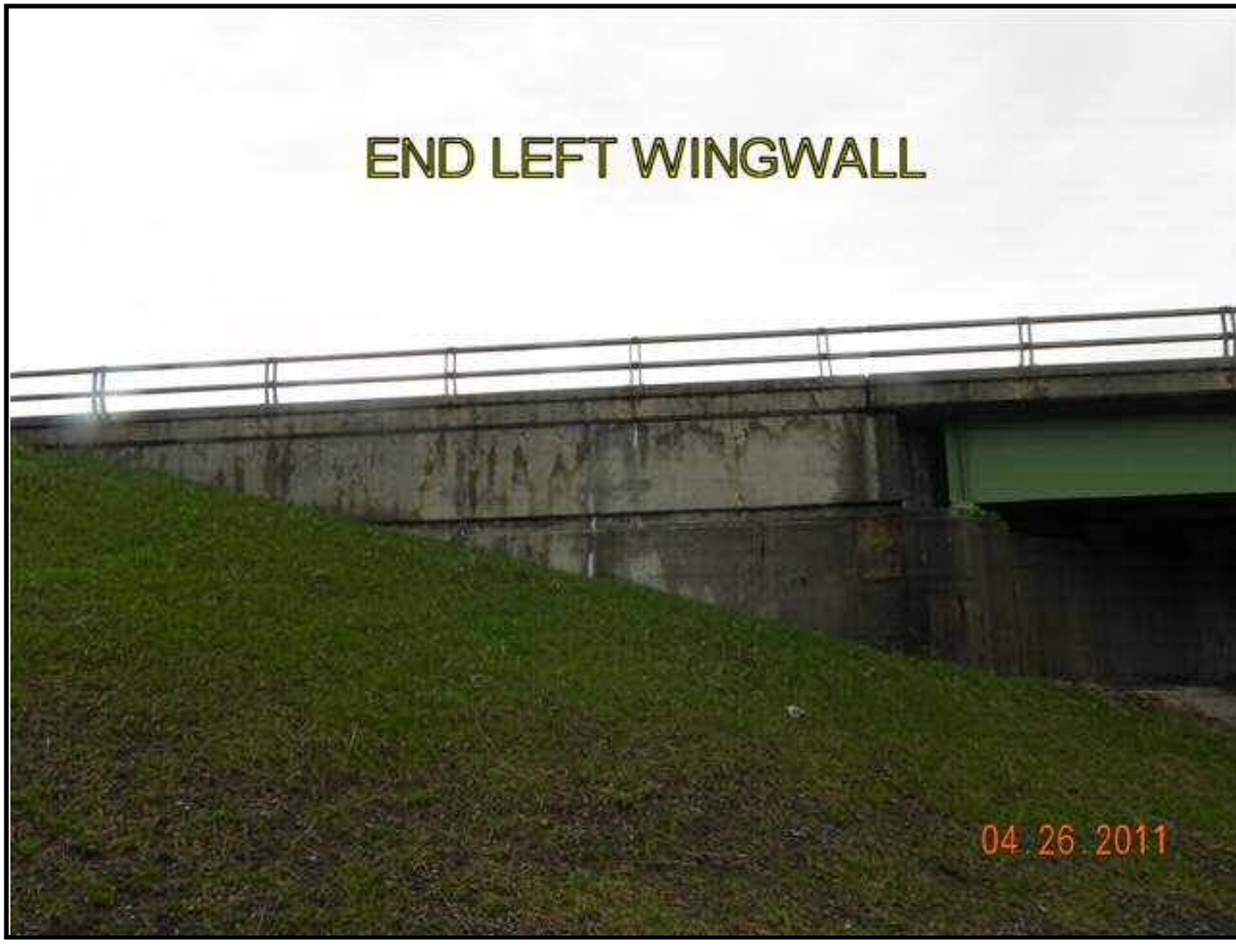

Standard Photos **RC: 33 BIN: 1093550**

Carried: 481I 481I33012060 Crossed: W.B.CONN.

11F2Left.jpg



Standard Photos **RC: 33 BIN: 1093550**

Carried: 481I 481I33012060 Crossed: W.B.CONN.

11F2Right.jpg



Standard Photos **RC: 33 BIN: 1093550**

Carried: 481I 481I33012060 Crossed: W.B.CONN.

11LeftElevation.jpg

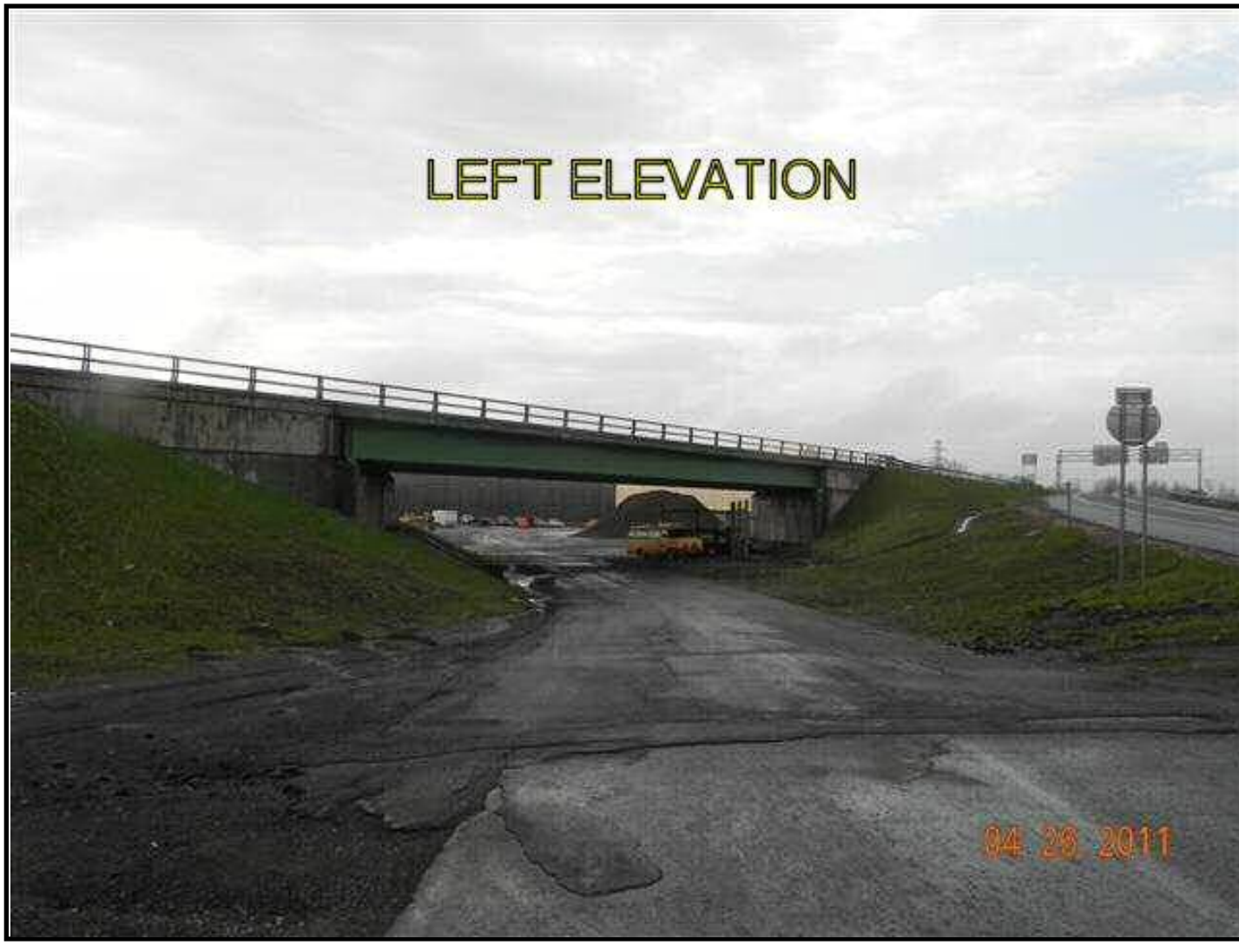

Standard Photos **RC: 33 BIN: 1093550**

Carried: 481I 481I33012060 Crossed: W.B.CONN.

11Underside.jpg



STANDARD PHOTOS

Standard Photos I-481 NB over W.B Connection, BIN 1093550



DESCRIPTION: ABUTMENT BEGIN

PHOTO 1



DESCRIPTION: ABUTMENT END

PHOTO 2



DESCRIPTION: APPROACH BEGIN

PHOTO 3



DESCRIPTION: APPROACH END

PHOTO 4



DESCRIPTION: ELEVATION RIGHT

PHOTO 5



DESCRIPTION: FRAMING – LOOKING FROM BEGIN TO END

PHOTO 6

Standard Photos I-481 NB over W.B Connection, BIN 1093550



DESCRIPTION: FEATURE CROSSED LEFT

PHOTO 7



DESCRIPTION: FEATURE CROSSED RIGHT

PHOTO 8



DESCRIPTION: TOP OF DECK – LOOKING FROM BEGIN TO END

PHOTO 9



DESCRIPTION: DECK BAY 3 – LOOKING FROM BEGIN TO END

PHOTO 10

LEVEL 1 LOAD RATING SUMMARY SHEET

Region/County Region 3/Onondaga BIN 1093550
Feature(s) Carried and Crossed I-481 Northbound/Westbound Connector
Date of field inspection upon which Level 1 rating is based 2/24/2014

OVERALL BRIDGE RATINGS (BASED ON LOWEST RATED ELEMENTS):

Total number of rating units 1

	H inventory	H operating	HS inventory	HS operating
Rating	H 35.60 (tons)	H 59.45 (tons)	HS 64.08 (tons)	HS 107.01 (tons)
Lowest rated element	Interior Girder G5 (G-2 plan)	Interior Girder G5 (G-2 plan)	Interior Girder G5 (G-2 plan)	Interior Girder G5 (G-2 plan)

Analysis method LFR Comments

Individual Rating Unit Level 1 values:

Rating unit span(s) 1

Main member ratings

	H inventory	H operating	HS inventory	HS operating
Rating	H (tons)	H (tons)	HS (tons)	HS (tons)
Lowest rated element				

Analysis method Comments

Floorbeam ratings

	H inventory	H operating	HS inventory	HS operating
Rating	H (tons)	H (tons)	HS (tons)	HS (tons)
Lowest rated element				

Analysis method Comments

Stringer ratings

	H inventory	H operating	HS inventory	HS operating
Rating	H 35.60 (tons)	H 59.45 (tons)	HS 64.08 (tons)	HS 107.01 (tons)
Lowest rated element	Interior Girder G5 (G-2 plan)	Interior Girder G5 (G-2 plan)	Interior Girder G5 (G-2 plan)	Interior Girder G5 (G-2 plan)

Analysis method LFR Comments

Certified by Date

Quality Control Engineer Signature Date
Agency or Company represented by certifier

Note:
-If connection ratings govern, record them under stringer ratings for stringer – floorbeam connection, floorbeam ratings for floorbeam-main member connections, etc.
-When Level 1 results indicated the need for load posting or other corrective action, the NYSDOT Regional Structures Engineer shall be notified immediately.
-Load ratings should be filed in the regional office within 60 days of completion of calculations.
-Bridges shall be flagged based on Level I results in accordance with the current NYSDOT flagging procedure.
-Bridge load posting, closure, etc. determinations shall be made as results are being produced.

PARSONS

100 Broadway
New York, NY 10005
Phone: 212-266-8300
Fax: 212-571-6825
www.parsons.com

TECHNICAL MEMORANDUM

FROM: Kian Siang Chau, P.E
NYSPE 082744

DATE: APRIL 3, 2014

RE: SEISMIC SCREENING SUMMARY
NEW YORK STATE DEPARTMENT OF TRANSPORTATION
D031085; PIN 3501.60; I-81

BIN: 1093550 (I-481 NB / WB CONN.)

This memorandum summarizes the seismic screening conducted for BIN 1093550 as part of the Interstate 81 Project in Syracuse, NY. The purpose of the screening is to determine if seismic retrofits are warranted at the superstructure to substructure connection, and if further seismic evaluation of the structure is required. This memorandum will give the screening results, retrofits required and recommendations for further seismic evaluation of the structure.

SCREENING PROCEDURE

The seismic screening was performed in accordance with the FHWA Seismic Retrofitting Manual for Highway Structures: Part 1 - Bridges, January 2006. As per the referenced manual, seismic screenings were performed for both lower level and upper level earthquake ground motion. The lower level earthquake ground motion has a reasonable likelihood of occurrence within the life of the bridge (50% probability of exceedance within a 75 year bridge life). The upper level earthquake ground motion has a finite likelihood of occurrence within the life of the bridge (7% probability of exceedance within a 75 year bridge life).

Values for the spectral acceleration for the Syracuse area used in the screening are as follows:

- Lower Level Earthquake Ground Motion for a Short Period (0.2 seconds): $S_S = 0.0251$
- Lower Level Earthquake Ground Motion for a Long Period (1.0 seconds): $S_1 = 0.0076$
- Upper Level Earthquake Ground Motion for a Short Period (0.2 seconds): $S_S = 0.139$
- Upper Level Earthquake Ground Motion for a Long Period (1.0 seconds): $S_1 = 0.047$

These values are considered constant and are the same for all seismic screenings of bridges in the Syracuse area.

The Site Class is based on the soil conditions at the bridge location. It was determined that this parameter has little effect on the results of the seismic screening because the spectral acceleration values for the Syracuse area are small. Based on this, a site class of D was used for all seismic screenings of bridges in the Syracuse area.

Bridge parameters used in the seismic screening were retrieved from the record drawings and WinBolts data.

The seismic screening takes into account the anticipated service life, importance, and the seismic exposure of the bridge to determine a seismic retrofit category (SRC). The SRC is then used to determine seismic evaluation methods and retrofit measures. There are four SRCs, A through D. Seismic retrofit category A is the lowest category; bridges in this category do not require retrofits or further seismic evaluation. Seismic retrofit category D is the highest category; bridges in this category requiring the most rigorous seismic evaluations and retrofits.

SCREENING RESULTS

The SRC for the bridge is "**C**" for lower level earthquake ground motion and "**B**" for upper level earthquake ground motion.

RETROFITS REQUIRED

No seismic retrofits are required for the bridge superstructure to substructure connection.

RECOMMENDATIONS FOR FURTHER SEISMIC EVALUATION

No further seismic evaluation is required for lower level earthquake ground motion. For the upper level earthquake ground motion, it is recommended that the capacities of the bearings are checked as per Section 5.2 of the referenced manual.

Retrofit cost estimates will be provided after any further required seismic evaluations are completed.

IN-DEPTH INSPECTION REPORT

D031085 P.I.N. 3501.60

ELEMENT SPECIFIC BRIDGE WORK

B.I.N. 3/3 1093561

TEAM LEADER George H Stam, P.E. 056216
NYSPE LICENSE #

ASSISTANT TEAM LEADER Timothy Olmstead

FEATURE CARRIED I-481 Southbound

FEATURE CROSSED NYS Rt. 290

DATE FIELD WORK BEGAN 1/9/14

DATE FIELD WORK COMPLETED 1/15/14

TABLE OF CONTENTS

- STRUCTURE IDENTIFICATION
- INTRODUCTION
- PROJECT LOCATION MAP
- IN-DEPTH CONDITION DOCUMENTATION
- PLANS & SKETCHES
- IN-DEPTH PHOTO DOCUMENTATION
- ASBESTOS SAMPLING SURVEY
- LATEST BIENNIAL INSPECTION REPORT

STRUCTURE IDENTIFICATION

a. Bridge Identification Number (BIN):	3/3 1093561
b. Reference Marker:	481I 3301 2067
c. Region:	NYSDOT Region 3
d. County:	Onondaga
e. Town:	Dewitt
f. Feature Carried:	I-481 Southbound
g. Feature Crossed:	NYS Rt. 290

INTRODUCTION

a. Bridge History

i. Year Built:	1972
ii. Bridge Type:	Single Span, Steel Multi-girder
iii. Span Length:	111 feet
iv. Out-to-Out Width:	42 feet
v. Structural Ratings and Rankings	
1. Federal Sufficiency:	88.5 (Apr. 2012)
2. Condition Rating:	4.984 (Apr. 2012)
3. General Recommendation:	6 (Apr. 2012)
vi. Live Load Posting (HS25):	No
vii. National Highway System (NHS):	Yes
viii. Previous work Done:	1987 – Replace wearing surface (asphalt concrete overlay) with concrete overlay 1992 – Clean and paint metal surfaces 1999 – Asbestos testing 1999 – Waterproofing bridge deck and corrosion inhibitor 2003 – Deck, abutment and joint repairs 2004 – Asbestos testing.
ix. Planned Future Work:	N/A

b. Highway Classification

i. Functional Classification: Urban Principle Arterial - Interstate

ii. Traffic Volumes

YEAR	PROJECTED AADT
2014	25226
2034	37485
2054	55700

iii. Plan for Maintenance and Protection of Traffic:
Maintenance and Protection of traffic will be achieved by staged construction.

PROJECT LOCATION MAP



IN-DEPTH CONDITION DOCUMENTATION

NYS DEPT. OF TRANSPORTATION
BRIDGE INSPECTION REPORT **BIN:** 1093561 **SHEET:** 1 **OF** 5 **DATE:** 1/9,13,15/2014

FEATURE CARRIED: I-481 SB
FEATURE CROSSED: KIRKVILLE RD

TEAM LEADER: G. STAM
ASSIST. TEAM LEADER: T. OLMSTEAD

ITEM	REMARKS	PHOTO NO.
	BEGIN ABUTMENT ITEMS	1,2
TP 349-22	Begin Abutment - Joint with Deck: The begin bearings are fixed. The steel armor was removed in 2003. There is no joint visible from the top (Photo 1). There is evidence of seepage down the backwall behind girder G5 (Photo 2).	
TP 349-24	Begin Abutment – Bearings: The begin bearing are fixed. The fascia bearings G1 and G5 have pack rust between the rocker and the masonry plate that restricts movement (Photo 3). The right bolt at bearing G5 is loose and tipped (Photo 3). The interior bearings are in good condition and appear to be functioning properly (Photo 4).	3,4
TP 349-26	Begin Abutment - Seat and Pedestals: Seat - The seat is in good condition with no hollow areas or significant cracks detected. Pedestals - The top of pedestal P1 is cracked at the front left and the wraps down the left side (Photo 5). Pedestal P2 is mapcracked and stained at the right rear side (Photo 6). Pedestal P3 is cracked and hollow sounding at the front right corner (Photo 7), and pedestal P4 is cracked at the front right corner and on the right side (Photo 8). The top and right side of pedestal P5 is mapcracked and the top surface has scaling at the left side (Photo 9). See the Begin Abutment Deterioration Sketch.	5,6,7,8,9
TP 349-28	Begin Abutment – Backwall: There are horizontal hairline cracks along the top 2 feet in girder bay 1. At the right side, there is tight map cracking with dampness and efflorescence staining from leakage down the backwall (Photo 2). At the right side there is a 1.5 foot long x 0.5 foot wide spall along the diagonal construction joint (Photo 10). See the Begin Abutment Deterioration Sketch.	2,10
TP 349-30	Begin Abutment – Stem: The stem has been recently repaired with several patched areas. There is a 1 foot wide x 1.5 foot high cracked and hollow area at the top of bay 2 in a recently patched area (Photo 11). See the Begin Abutment Deterioration Sketch.	11
	END ABUTMENT ITEMS	
TP 349-23	End Abutment - Joint with Deck: The end joint is steel armored compression seal type (Photo 12). In the right half, there are several areas where there is a gap up to 0.5 inch between the seal and the armor angle (Photo 13). Near the centerline the seal is raised up to level with the armor steel. The concrete headers are in generally good condition with only minor spalling of the concrete at the end edge (Photo 12).	12,13
TP 349-25	End Abutment – Bearings: The end bearings are expansion. The fascia bearings are slightly rusted (Photo 14). The interior bearings are in good condition (Photo 15).	14,15

ITEM	REMARKS	PHOTO NO.
TP 349-27	End Abutment - Seats and Pedestals: The seat is in good condition with no hollow areas or significant cracks detected. The top left edge of pedestal P1 is cracked and hollow sounding. See the End Abutment Deterioration Sketch. The remaining pedestals are in good condition.	
TP 349-29	End Abutment – Backwall: The backwall is hairline cracked throughout (Photo 16). At the end left, the top of the backwall is cracked and there is a two square foot segmented chunk of concrete, and a 3 feet wide x 3.5 feet high x 6 inches deep spall with exposed reinforcement (Photo 17). There are horizontal cracks along the top 2 to 4 inches of the backwall with leakage and staining in bays 1, 2, & 4 (Photos 18, 19, & 16). There is a 4 square foot mapcracked area with efflorescence at the end right backwall (Photo 20). See the End Abutment Deterioration Sketch.	16,17,18 19,20
TP 349-31	End Abutment – Stem: There is a full height vertical hairline crack left of pedestal P3 and scattered hairline cracks below bay 4 and at the left side. See the End Abutment Deterioration Sketch.	
	APPROACH ITEMS	
TP 349-53	Approach - Drainage: At the begin right approach, the approach pavement at the curbline is slightly higher than the top of deck trapping runoff and causing shallow ponding along the curbine of the deck at that location (Photo 21). There is leakage down the begin right backwall (Photo 2).	2,21
TP 349-55	Approach - Settlement: There is no significant settlement at either approach.	
TP 349-57	Approach - Pavement: At both approaches, the asphalt pavement adjacent to the bridge is transverse cracked and raveled with up to 2 inches wide x up to 1.5 inches deep potholes along the concrete headers (Photos 1 & 12).	1,12
	DECK ITEMS	
TP 350-19	Deck - Wearing Surface: The ride quality of the deck is smooth. There is some minor wear of the transverse grooving in the wheel paths of the left lane.	
TP 350-20	Deck - Curbs: The curbs are granite in good condition. Left average curb reveal is 8.5 inches and the average right curb reveal is 9 inches.	
TP 350-21	Deck - Sidewalks and Fascias: Sidewalks – Both safety walks have light mapcracking throughout and there are scattered small spalls along the curb (Photo 22). No hollow sounding areas were detected.	22

ITEM	REMARKS	PHOTO NO.
	Fascias – Left - The upper (safety walk) portion and the lower (deck) portion of the left fascia are tight mapcracked throughout (Photo 23). There is a spall of the upper portion at the begin (Photo 24). The lower portion has several spalled and hollow sounding areas. Significant areas are noted below:	23,24
	o A horizontal crack just below the upper portion of the fascia over 50% of the span length. Most of this crack is tight with some efflorescence, however, a +/- 20 long section near mid-span is spalled along the crack up to 2 inches high x 2 inches deep with staining (Photo 25);	25
	o A 1 square foot hollow sounding area with horizontal cracking under the 2nd railing post (Photo 26);	26
	o A 1 square foot spall with exposed reinforcement and staining near the 3rd railing post (Photo 23);	23
	o A 3 feet long horizontal crack with shallow spalling near the end (Photo 27); and	27
	o A 1 square foot spall along the bottom edge near the end (Photo 27).	27
	Right - The upper (safety walk) portion of the right fascia is mapcracked with light efflorescence throughout (Photo 28). The lower portion has several spalled and hollow sounding areas. Significant areas are noted below:	28
	o A 2 square foot spall up to 2 inches deep with exposed reinforcement and staining near the begin (Photos 29 & 30);	29,30
	o A 1 square foot x 1 inch deep spall with staining beneath the 1st railing bay (Photos 29 & 31);	29,31
	o A 2 square foot hollow sounding area with horizontal cracking under the 2nd railing post (Photo 31);	31
	o A horizontal crack with staining and a 1 foot long x 2 inches high x 1 inch deep spall near mid-span (Photo 28);	28
	o A horizontal crack with efflorescence just beneath the upper portion of the fascia for an estimated 30% of the fascia in the middle half of the span (Photo 28). Most of this crack is tight with some efflorescence, however, a +/- 12 feet long section near 2/3 span is spalled along the crack up to 2 inches high x 2 inches deep with staining (Photo 32); and	28,32
	o Several horizontal cracks with scattered spalls along the cracks in the end ¼ of the span (Photo 33).	33
TP 350-22	Deck - Railings: The railings on both sides of the bridge have failure of the galvanized surface with surface rusting of the top and sides of both rails (Photo 34). The rails are more severely rusted near the rail splices with several rust through holes on the side and bottom surfaces (Photos 35 & 36). There is chain link snow fence in good condition attached to the left and right railings above the Rt. 290 roadway below.	34,35,36
	SUPERSTRUCTURE ITEMS	
TP 350-27	Structural Deck: Record plans indicate the initial structural deck is 8 inches thick concrete mono-deck. SIP forms were not used. Records indicate the deck was repaired, the surface was scarified and received a 1.75 inch concrete overlay in 1987.	

ITEM	REMARKS	PHOTO NO.
	Top of Deck - There is scattered random cracking throughout with scattered hollow areas (Photo 37) as illustrated in the Top of Deck Deterioration Sketch. The cracking is worst toward the end half of the span with longitudinal, transverse, and diagonal cracks up to 1/8 inch wide (Photos 38 & 39). The total hollow area is 1.5%.	37,38,39
	Underdeck – There is widespread hairline cracking of the underside of the deck throughout (Photo 40). There are scattered more pronounced cracks, some with efflorescence. There are delaminated, hollow sounding, and damp areas; and spalls, some with exposed rusted reinforcing bars. The deteriorated areas are illustrated on the Under Deck Deterioration Sketch. The more significant areas are noted below: o Bay 1 near diaphragm 4 – 10 square foot area of hollow sounding concrete. o Bay 1 near the end of diaphragm bay 5 – 25 square foot area of hollow sounding concrete.	40
	o Bay 3 in diaphragm bay 4 – 2 square foot area cracking and hollow sounding concrete and a 3 square foot spall with efflorescence and exposed reinforcement (Photo 41).	41
	o Bay 4 at diaphragm 5 – 10 square foot area of hollow sounding concrete and a 2 square foot spalled area with exposed reinforcement (Photo 42).	42
	o Bay 4 near the end – 10 square foot area of hollow sounding and delaminated concrete with spalling along the edges (Photo 43).	43
	o Bay 4 at the end right – 3 square foot hollow sounding area with surface scaling and light efflorescence (Photo 44).	44
TP 350-28	Primary Members: Good condition; surface rusting where the paint has peeled or blistered. There is no significant section loss noted.	
TP 350-29	Secondary Members: Good condition; surface rusting where the paint has peeled or blistered.	
TP 350-30	Paint: The paint system is failed on 10% of the surfaces of the girders and diaphragms. There is cracking and peeling of the paint on the bottom flanges and scattered locations on the girder webs and secondary members (Photos 45 & 46). There is surface rusting where the paint has peeled or blistered. The outside web of the right fascia girder G5 has blistering and peeling paint over 15% of the surface (Photo 47).	45,46,47
	UTILITIES ITEMS	
TP 350-43	Lighting: None.	
TP 350-44	Sign Structure: None.	
TP 350-45	Utilities and Support: There are overhead wires attached to the bottom flanges of both fascia girders at the end (Photo 48).	48

ITEM	REMARKS	PHOTO NO.
	SPECIAL EMPHASIS ITEMS Special Emphasis Inspection Required Non-Redundant/Fracture Critical Members – No Pin and Hangers – No Fatigue-Prone Welds – No Non-Categorized Fatigue-Prone Details – No Other – No Special Emphasis Details No Special emphasis details.	

PLANS & SKETCHES

3/3 1093561

D259214

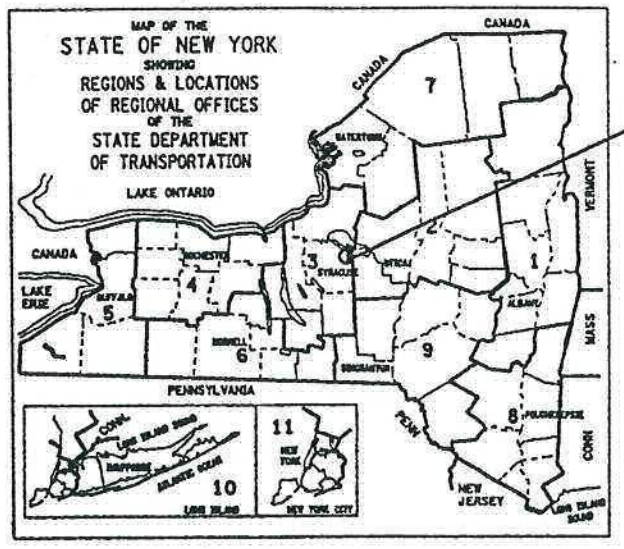

PROJECT LOCATION

THIS IS A BRIDGE REHABILITATION PROJECT ON VARIOUS BRIDGES ON INTERSTATE 481, LOCATED IN THE TOWNS OF CICERO AND DEWITT IN ONONDAGA COUNTY. THIS WORK CONSISTS OF BRIDGE JOINTS, BEARINGS, BRIDGE RAIL AND CONCRETE REPAIR OF SUBSTRUCTURES. THERE ARE 28 BRIDGES IN THE PROJECT BEGINNING AT REFERENCE MARKER 481I-3301-1000 SOUTH OF THE CITY OF SYRACUSE AND ENDING AT REFERENCE MARKER 481I-3301-2143. I481 INTERCHANGE NORTH OF THE CITY.

STATE OF NEW YORK
DEPARTMENT OF TRANSPORTATION
OFFICE OF ENGINEERING

BRIDGE REHABILITATION PROJECT (ELEMENT SPECIFIC)
VARIOUS BRIDGES ON INTERSTATE 481
TOWNS OF DEWITT AND CICERO

VOLUME 1 OF 2

432 SHEETS ONONDAGA COUNTY CONTRACT D259214

F.A. PROJECT

STANDARD SHEETS

M203-4, M203-5, M203-6R1, M603-1
M606-32, M606-33, M606-34,
M619-3R1, M619-4, M619-5
M685-1, M685-2R1, M685-3R1
M685-4R1, M685-5R1, M403-1, M203-4,
M203-5, M203-6R1, M603-1

✓ Bid 4/14/09
✓ Check 5/9/06 & 4/21/09
✓ Cole 5/5/09
Revised 4/24/12
PTR 4/17/12

ALL WORK CONTEMPLATED UNDER THIS CONTRACT IS TO BE COVERED BY AND IN CONFORMITY WITH THE STANDARD SPECIFICATIONS (METRIC UNITS) OF JANUARY 2, 2002, AS AMENDED BY ADDENDA NOS. 1 AND 2, EXCEPT AS MODIFIED ON THESE PLANS AND IN THE ITEMIZED PROPOSAL.

CONTRACTOR'S NAME _____
AWARD DATE _____
COMPLETION DATE _____
FINAL ACCEPTANCE DATE _____
REGIONAL DIRECTOR _____
ENGINEER IN CHARGE _____
FINAL COST TOTAL _____

FISCAL SHARE COST(S)

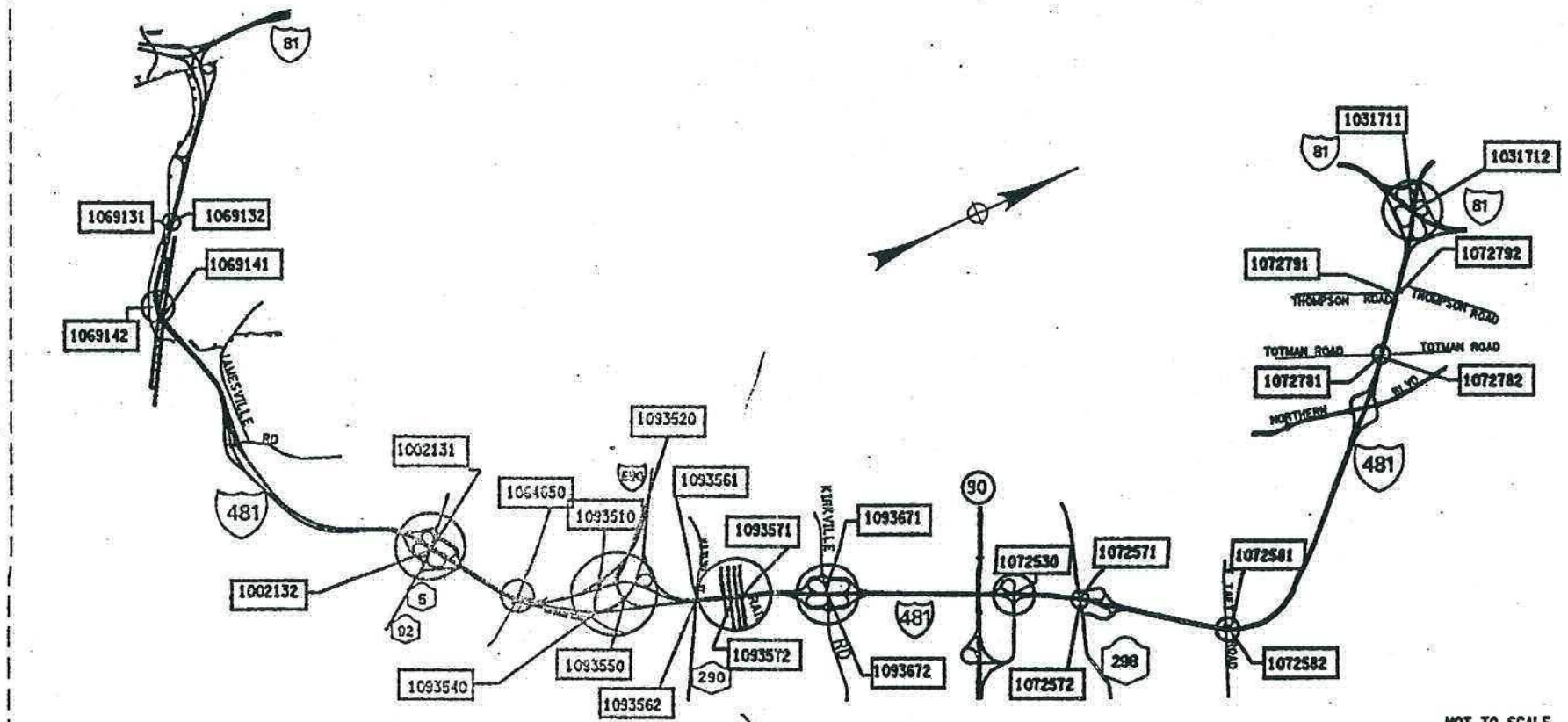

NOT TO SCALE

PROJECT LOCATION

BRIDGE REHAB. PROJ.- ELEMENT SPECIFIC			
VARIOUS BRIDGES ON INTERSTATE 481			
TOWNS OF DEWITT AND CICERO			
ONONDAGA COUNTY			
FED. ROAD REG. NO.	STATE	SHEET NO.	TOTAL SHEETS
1	N.Y.	1	432
FEDERAL AID PROJECT NO.			
CAPITAL PROJECT IDENTIFICATION NO. 3056.13			
INDEX ON SHEET NO. 5 & 6			

RECOMMENDED BY John E. Fritz 9/04/02
REGIONAL DESIGN ENGINEER DATE

RECOMMENDED BY Myron A. Quirk 9/4/02
REGIONAL CONSTRUCTION ENGINEER DATE

RECOMMENDED BY 9/04/02
REGIONAL TRANSPORTATION MAINTENANCE ENGINEER DATE

RECOMMENDED BY 9-4-02
REGIONAL TRAFFIC ENGINEER DATE

APPROVED BY 09-04-02
REGIONAL DIRECTOR DATE

DESIGN SUPERVISOR Steven E. JOB MANAGER Nick DeCicco DESIGNED BY Nick DeCicco CHECKED BY Gil Snider DRAFTED BY Bart Isley ESTIMATED BY Bart Isley CHECKED BY Gil Snider

FED ROAD REG. NO.	STATE	CONTRACT NO.	SHEET NO.	TOTAL SHEETS
1	N.Y.	D259214	280	432

BRIDGE REHABILITATION PROJECT (ELEMENT SPECIFIC)
VARIOUS BRIDGES ON INTERSTATE 481
TOWNS OF DEWITT AND CICERO
ONONDAGA COUNTY
P.I.N. 305613 | B.I.N. 1093561 & 1093562

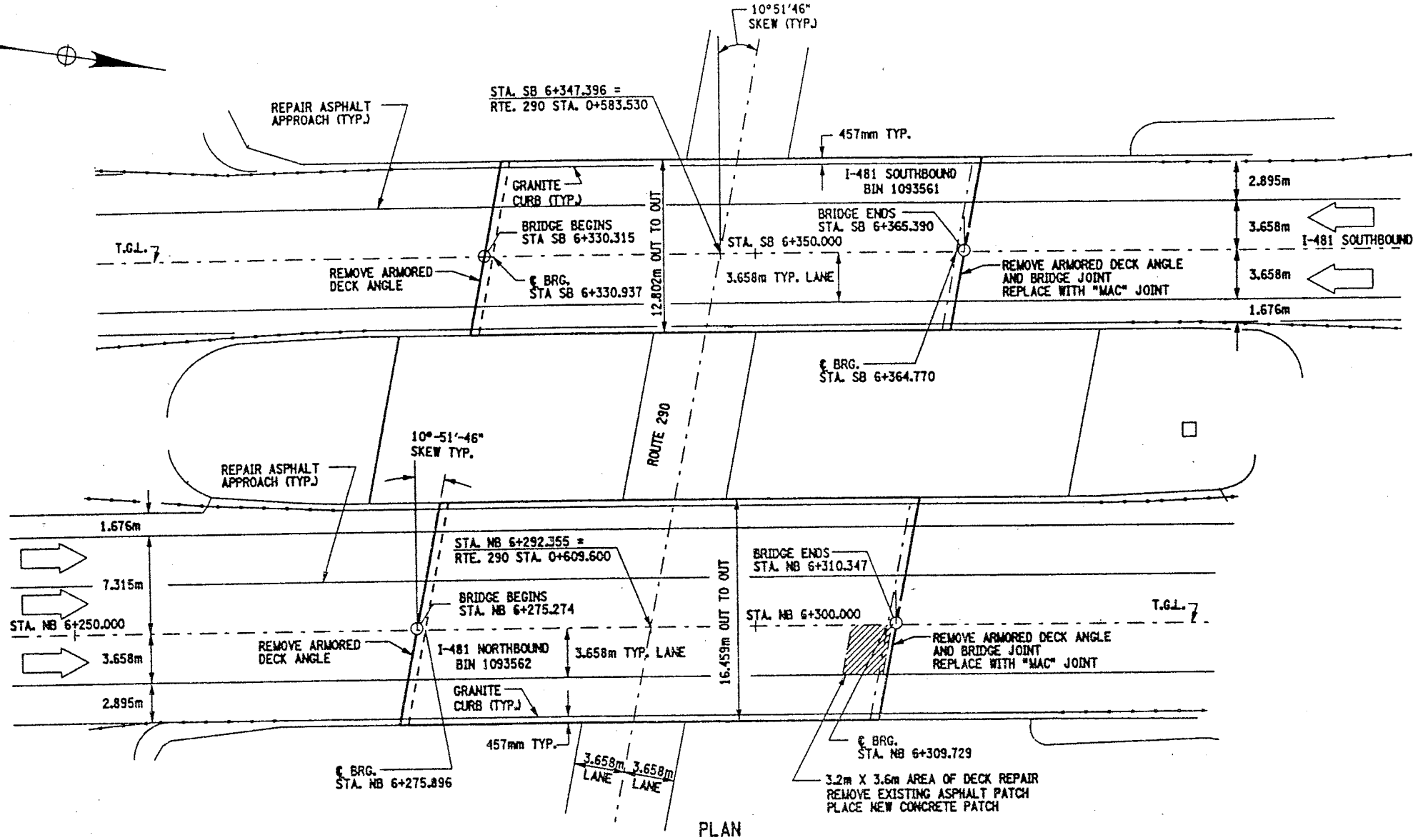

PLAN
SCALE: 1:200

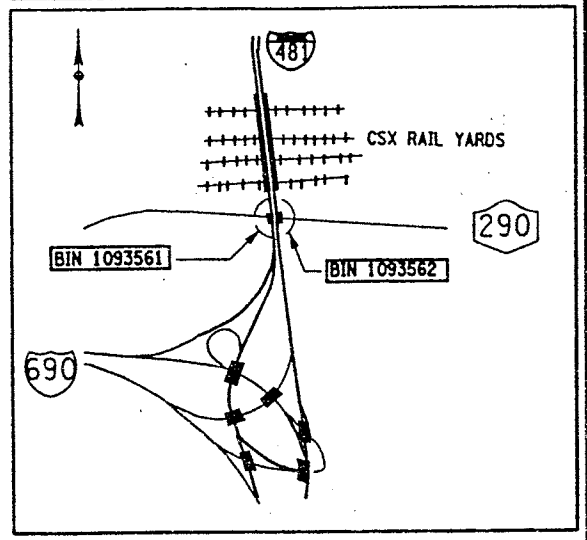

LOCATION MAP
NOT TO SCALE

WORK TO BE DONE ON BIN 1093561 (NOT NECESSARILY IN THIS ORDER)

1. ESTABLISH MP&T SCHEME FOR STAGE CONSTRUCTION.
2. REMOVE EXISTING BRIDGE JOINT, END ABUTMENT (NORTH), TO INCLUDE REMOVAL OF THE ARMORING DECK ANGLE.
3. REMOVE EXISTING ARMORING DECK ANGLE AT BEGINNING ABUTMENT, (SOUTH).
4. INSTALL PROPOSED BRIDGE JOINT AT END ABUTMENT, ("MAC" JOINT).
5. REPAIR DECK AREA AT BEGINNING ABUTMENT WHERE THE ARMORING DECK ANGLE WAS REMOVED.
6. PERFORM MINOR REPAIRS TO ASPHALT APPROACHES.
7. PERFORM MISCELLANEOUS REPAIRS TO CONCRETE ELEMENTS AT BOTH ABUTMENTS.

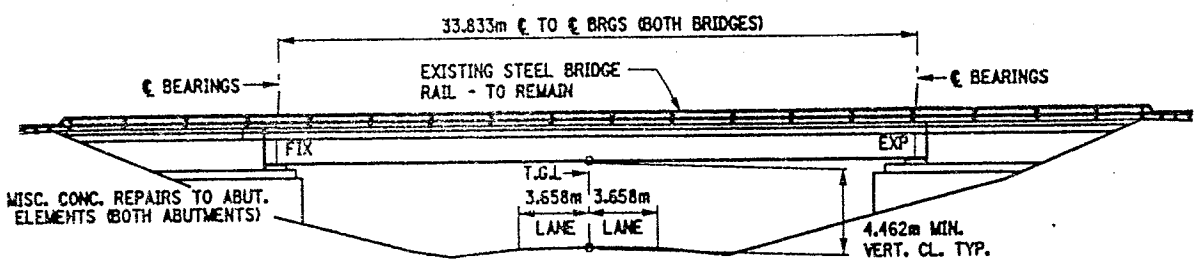

ELEVATION
SCALE: 1:200

NOTES:

SEE DWG. TS16-1 FOR WORK TO BE DONE ON BIN 1093562.

"MAC" JOINT IS A MODIFIED ARMORED JOINT SYSTEM WITH COMPRESSION SEAL.

UTILITIES BELONGING TO 'NEWCHANNEL CORP.' AND ELECTRIC UTILITIES IN VICINITY OF THESE STRUCTURES. SEE INFORMATION AVAILABLE TO BIDDERS FOR ADDITIONAL DETAILS.

BIN 1093561 SOUTHBOUND
BIN 1093562 NORTHBOUND

ALL DIMENSIONS ARE IN m UNLESS OTHERWISE NOTED

AS BUILT REVISIONS

SIGNATURE DATE

INTERSTATE 481
OVER
ROUTE 290

PLAN, ELEVATION AND BRIDGE SECTION

STATE OF NEW YORK
DEPARTMENT OF TRANSPORTATION

FILENAME	REGION	DATE	DRAWING NO.
305613AG.G1A	3	10/02	GP16-1

DESIGN SUPERVISOR ____ JOB MANAGER ____ DESIGNED BY ____ DRAFTED BY ____ ESTIMATED BY ____ CHECKED BY ____

FED ROAD REG. NO.	STATE	CONTRACT NO.	SHEET NO.	TOTAL SHEETS
1	N.Y.	D259214	281	432

BRIDGE REHABILITATION PROJECT (ELEMENT SPECIFIC)
VARIOUS BRIDGES ON INTERSTATE 481
TOWNS OF DEWITT AND CICERO
ONONDAGA COUNTY
P.I.N. 305613 | B.I.N. 1093561 & 1093562

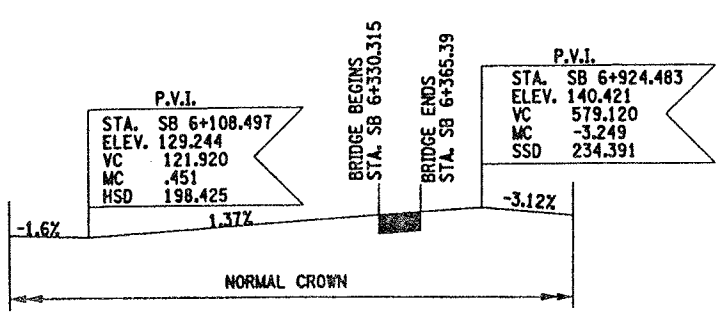

PROFILE
1093561 SB
NOT TO SCALE

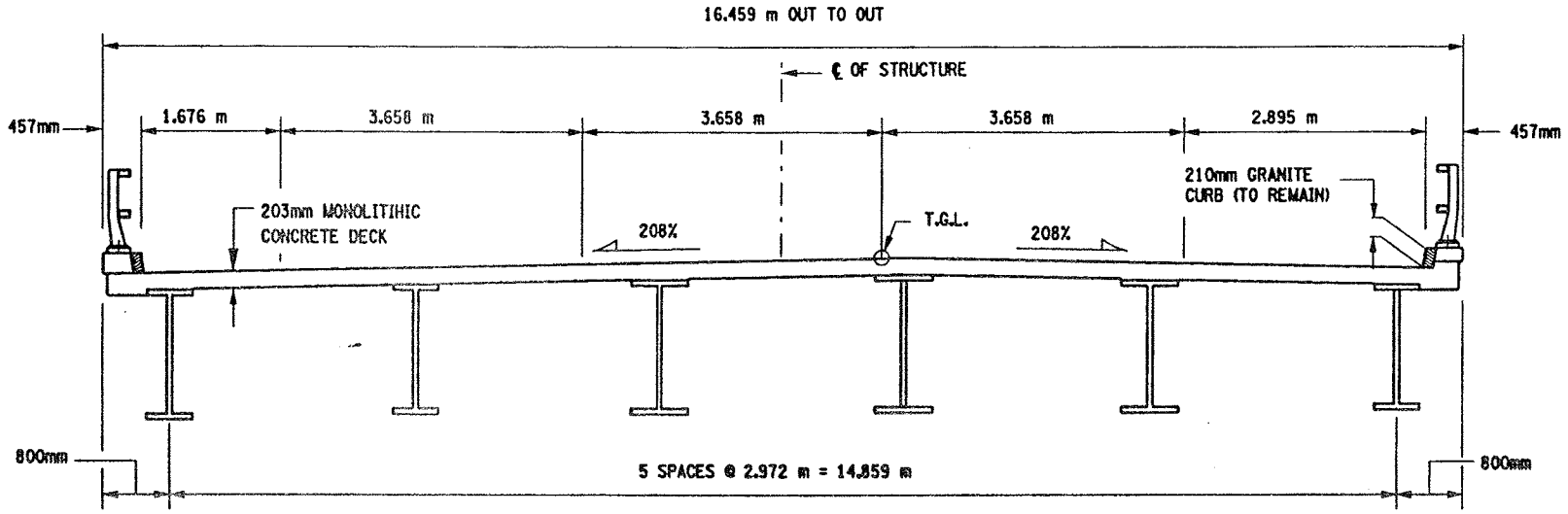

SECTION
1093562 NB
NOT TO SCALE

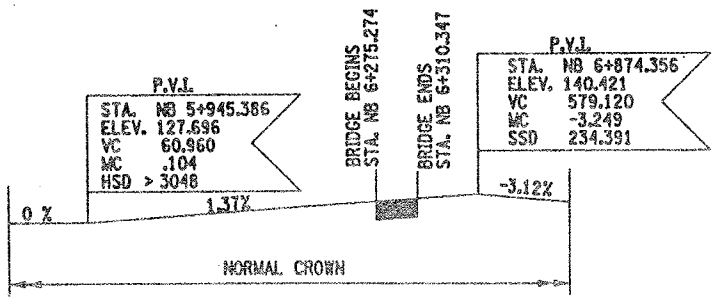

PROFILE
1093562 NB
NOT TO SCALE

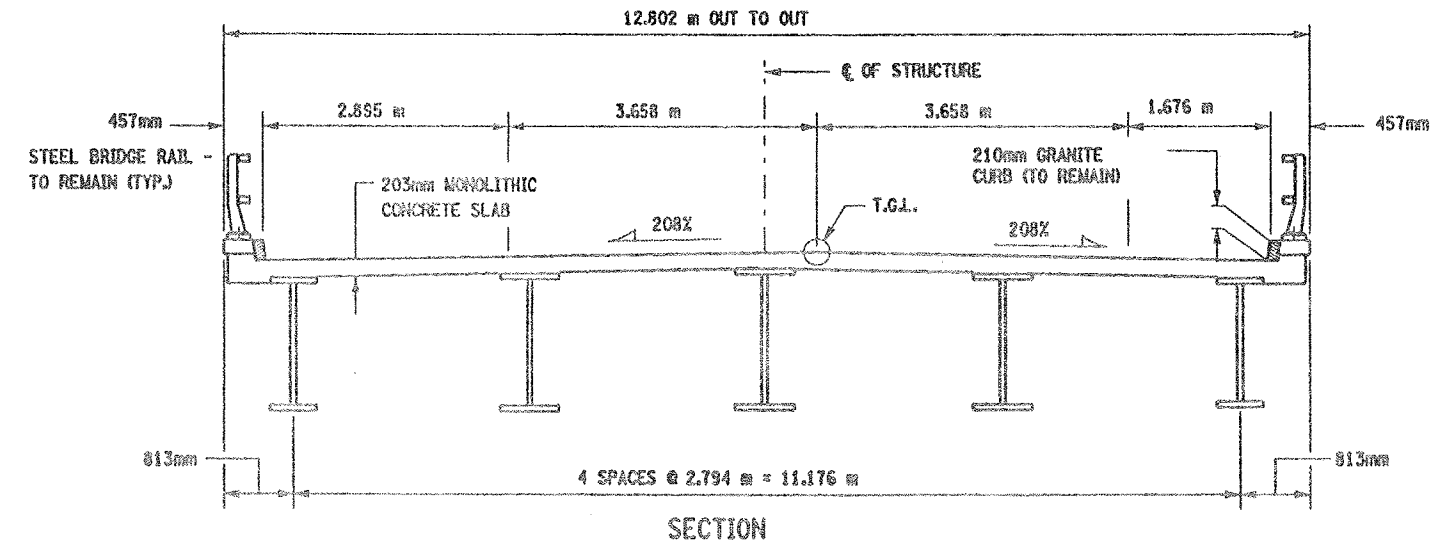

SECTION
1093561 SB
NOT TO SCALE

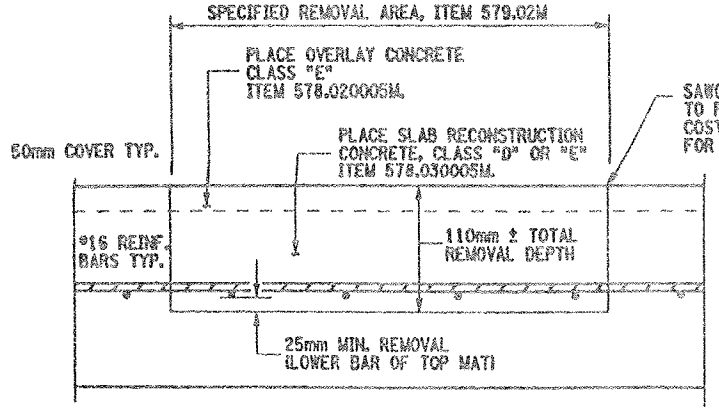

CROSS SECTION VIEW THROUGH REPAIR LOCATION
NOT TO SCALE

DECK REPAIR NOTES:

THIS LOCATION IS CURRENTLY FILLED WITH ASPHALT (BLACKTOP). DEPTH OF ASPHALT IS UNKNOWN, ESTIMATED AT @ 36mm. THE REMOVAL OF THE ASPHALT AND CONCRETE TO LIMITS SHOWN TO BE PAID UNDER ITEM 579.02M.

REMOVE CONCRETE TO LIMITS SHOWN AND TO SOUND CONCRETE AS ORDER BY ENGINEER.

THE AREA THAT IS REPAIRED SHALL ALSO RECEIVE:

ITEM 558.01M - TRANSVERSE SAWCUT GROOVING
ITEM 18559.1896M - PROTECTIVE SEALING

THE AREA SHOWN IS THE RESULT OF FIELD INVESTIGATION AND IS AN APPROXIMATE AREA. THE ACTUAL LIMITS SHALL BE AS DIRECTED BY ENGINEER.

NO FULL DEPTH SLAB REPAIR IS EXPECTED AT THIS LOCATION.

REFER TO DRAWING NO. GN-1 FOR SERIALIZED ITEM NOTES.

GENERAL NOTES:

SEE DWG. GP16-1 FOR WORK TO BE DONE ON BIN 1093561.

"MAC" JOINT IS A MODIFIED ARMORED JOINT SYSTEM WITH COMPRESSION SEAL.

UTILITIES BELONGING TO 'NEWCHANNEL CORP.' AND ELECTRIC UTILITIES IN VICINITY OF THESE STRUCTURES. SEE INFORMATION AVAILABLE TO BIDDERS FOR ADDITIONAL DETAILS.

WORK TO BE DONE ON BIN 1093562- (NOT NECESSARILY IN THIS ORDER)

1. ESTABLISH MP&T SCHEME FOR STAGE CONSTRUCTION.
2. REMOVE EXISTING BRIDGE JOINT, END ABUTMENT (NORTH), TO INCLUDE REMOVAL OF THE ARMORING DECK ANGLE.
3. REMOVE EXISTING ARMORING DECK ANGLE AT BEGINNING ABUTMENT, (SOUTH).
4. INSTALL PROPOSED BRIDGE JOINT AT END ABUTMENT, ("MAC" JOINT).
5. REPAIR DECK AREA AT BEGINNING ABUTMENT WHERE THE ARMORING DECK ANGLE WAS REMOVED.
6. PERFORM MINOR REPAIRS TO ASPHALT APPROACHES.
7. PERFORM MISCELLANEOUS REPAIRS TO CONCRETE ELEMENTS AT BOTH ABUTMENTS.
8. REMOVE EXISTING BRIDGE DECK ASPHALT PATCH.
9. PLACE NEW CONCRETE BRIDGE DECK PATCH.

ITEMS USED:

ITEM 558.01M - TRANSVERSE SAWCUT GROOVING (SM)
ITEM 18559.1896M - PROTECTIVE SEALING FOR STRUCT. CONC. (SM)
ITEM 578.020005M - OVERLAY CONCRETE, CLASS "E" (SM)
ITEM 578.030005M - SLAB RECONSTRUCTION CONCRETE, CLASS "D" OR "E" (SM)
ITEM 579.02M - REINFORCING BAR EXPOSURE (SM)

ALL DIMENSIONS ARE IN m UNLESS OTHERWISE NOTED

AS BUILT REVISIONS

SIGNATURE DATE

INTERSTATE 481
OVER
ROUTE 290

TYPICAL BRIDGE SECTION AND PROFILE

STATE OF NEW YORK
DEPARTMENT OF TRANSPORTATION

FILENAME	REGION	DATE	DRAWING NO.
305613AG.G1A	3	10/02	TS16-1

DESIGN SUPERVISOR ____ JOB MANAGER ____ DESIGNED BY ____ ESTIMATED BY ____ DRAFTED BY ____ CHECKED BY ____

FED ROAD REG. NO.	STATE	CONTRACT NO.	SHEET NO.	TOTAL SHEETS
1	N.Y.	D259214	282	432

BRIDGE REHABILITATION PROJECT (ELEMENT SPECIFIC)

VARIOUS BRIDGES ON INTERSTATE 481

TOWNS OF DEWITT AND CICERO

ONONDAGA COUNTY

P.I.N. 305613 | B.I.N. 1093561

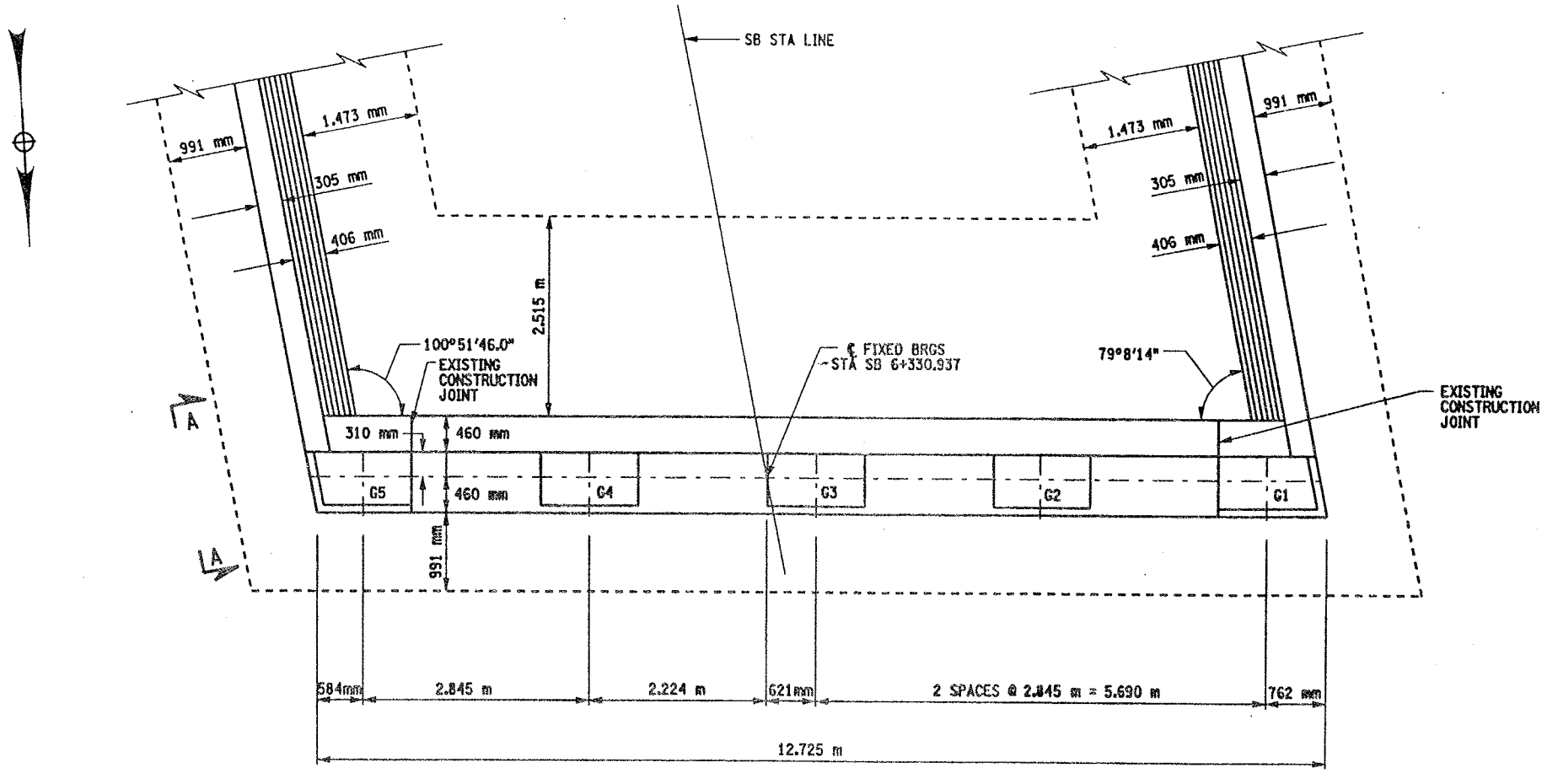

PLAN

SCALE 1:40

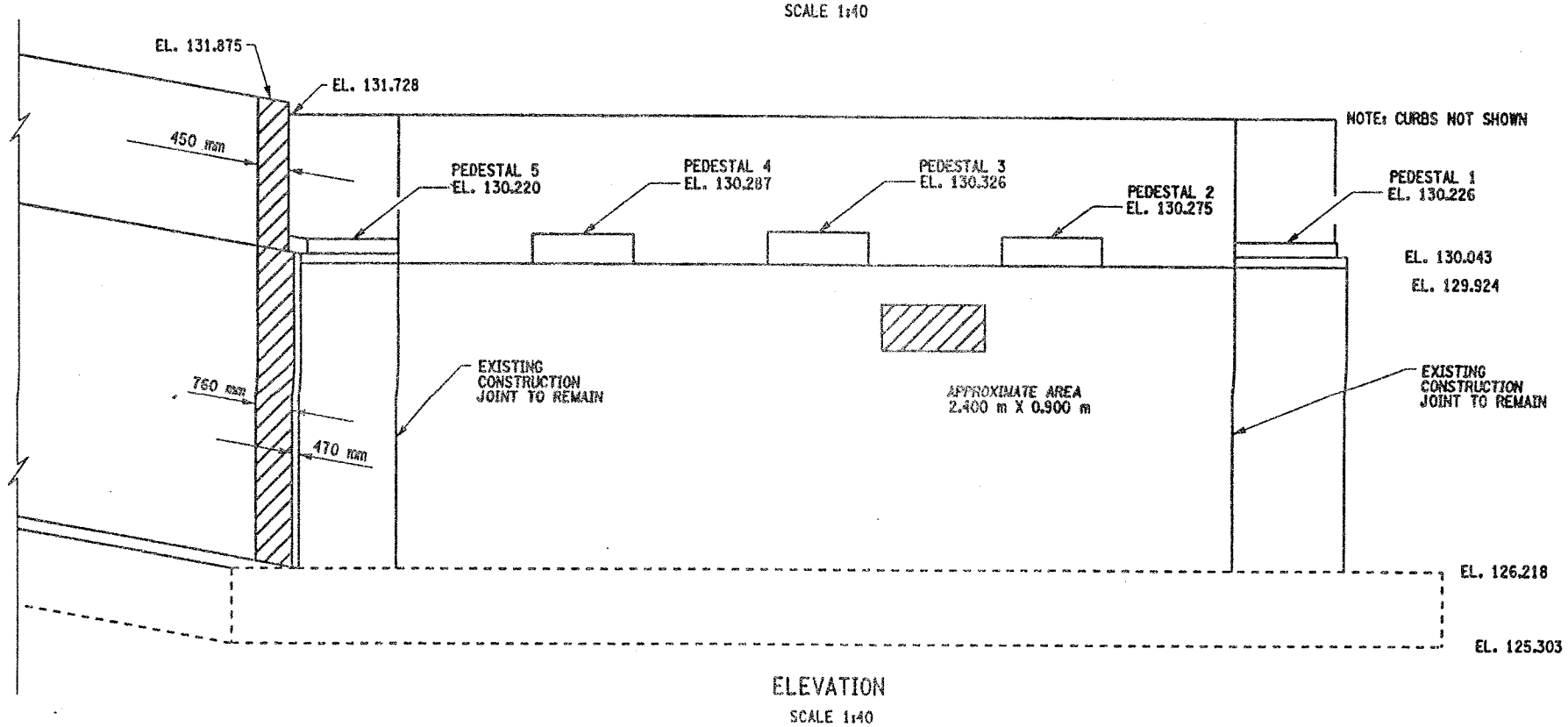

ELEVATION

SCALE 1:40

NOTES:

1. ALL DIMENSIONS SHOWN FOR CONCRETE REMOVAL ARE APPROXIMATE AND SHALL BE FIELD VERIFIED BY THE CONTRACTOR AND EIC.
2. REMOVE CONCRETE TO LIMITS SHOWN AS WELL AS TO SOUND CONCRETE, A.O.B.E.
3. WHEN REMOVING EXISTING CONCRETE, SAWCUT 6 mm MIN. TO PRODUCE NEAT REMOVAL LINES. ANY COST TO BE INCLUDED IN THE BID PRICE FOR ITEM 582.05M.
4. ALL EXISTING REINFORCEMENT TO REMAIN.
5. ELEVATIONS ARE GIVEN FOR QUANTITIY ESTIMATES ONLY.
6. REFER TO CONTRACT FISH 70-7 FOR ORIGINAL CONSTRUCTION DETAILS AND D251436 FOR ADDITIONAL DETAILS.
7. FOR REMOVAL DETAIL SEE DWG. AB16-2.

AREAS OF PROPOSED WORK: ITEM 582.05M REMOVAL OF STRUCTURAL CONCRETE- REPLACEMENT WITH CLASS A CONCRETE

LIST OF ITEMS USED:

ITEM 582.05M - REMOVAL OF STRUCTURAL CONCRETE REPLACEMENT WITH CLASS A CONCRETE (CM)

ALL DIMENSIONS ARE IN m UNLESS OTHERWISE NOTED

AS BUILT REVISIONS

SIGNATURE DATE

INTERSTATE 481 SB
OVER
ROUTE 290

SOUTH ABUTMENT PLAN AND ELEVATION

STATE OF NEW YORK
DEPARTMENT OF TRANSPORTATION

FILENAME	REGION	DATE	DRAWING NO.
305613AG.A1B	3	10/02	AB16-1

DESIGN SUPERVISOR ____ JOB MANAGER ____ DESIGNED BY ____ ESTIMATED BY ____ DRAFTED BY ____ CHECKED BY ____

BIN: 1093561
I481 SB / RT 290

BEGIN ABUTMENT DETERIORATION SKETCH

NOT TO SCALE

DATE: 01/15/2014

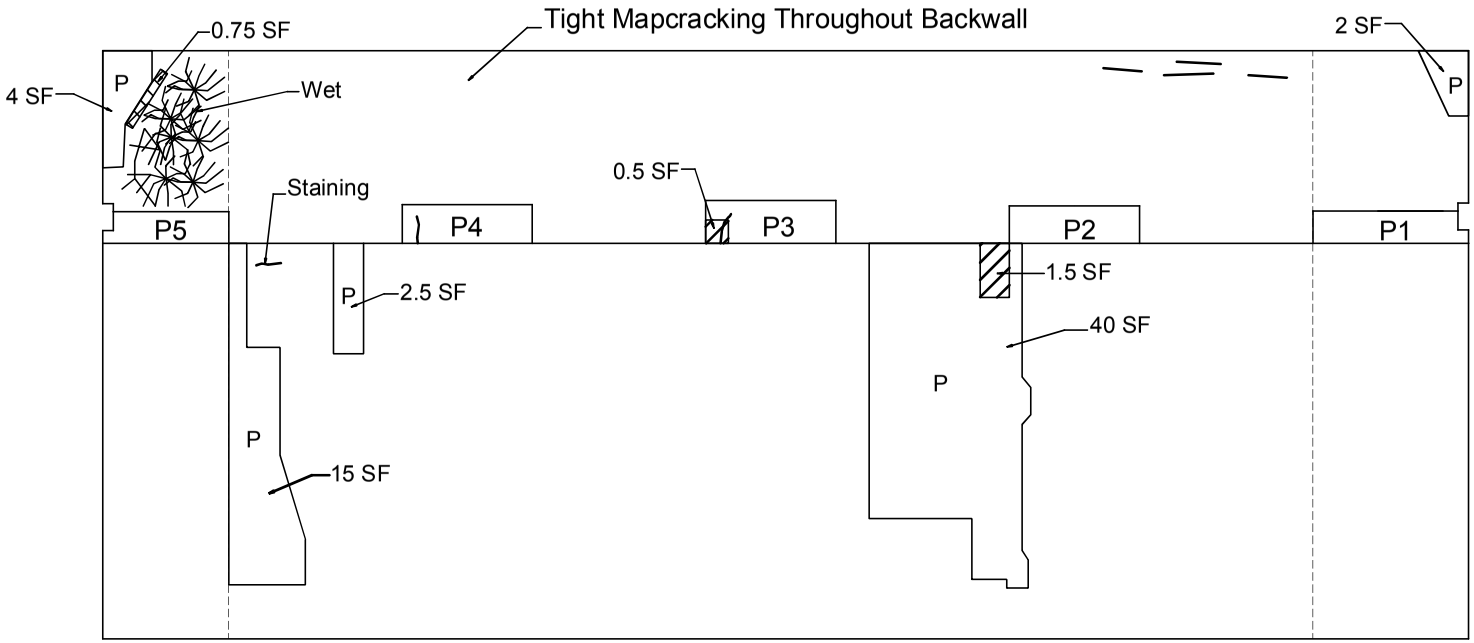

ELEVATION

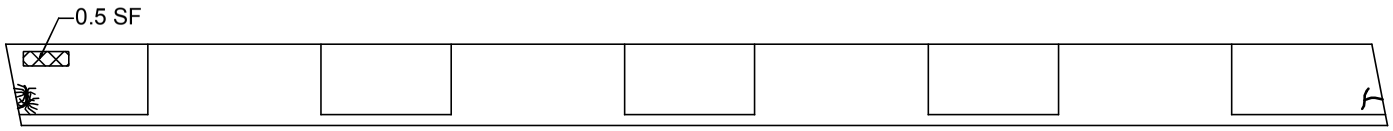

PLAN

LEGEND					
P	Patch		Spall		Hollow
	Mapcracking		Crack		

BIN: 1093561
I481 SB / RT 290

END ABUTMENT DETERIORATION SKETCH

NOT TO SCALE

DATE: 01/15/2014

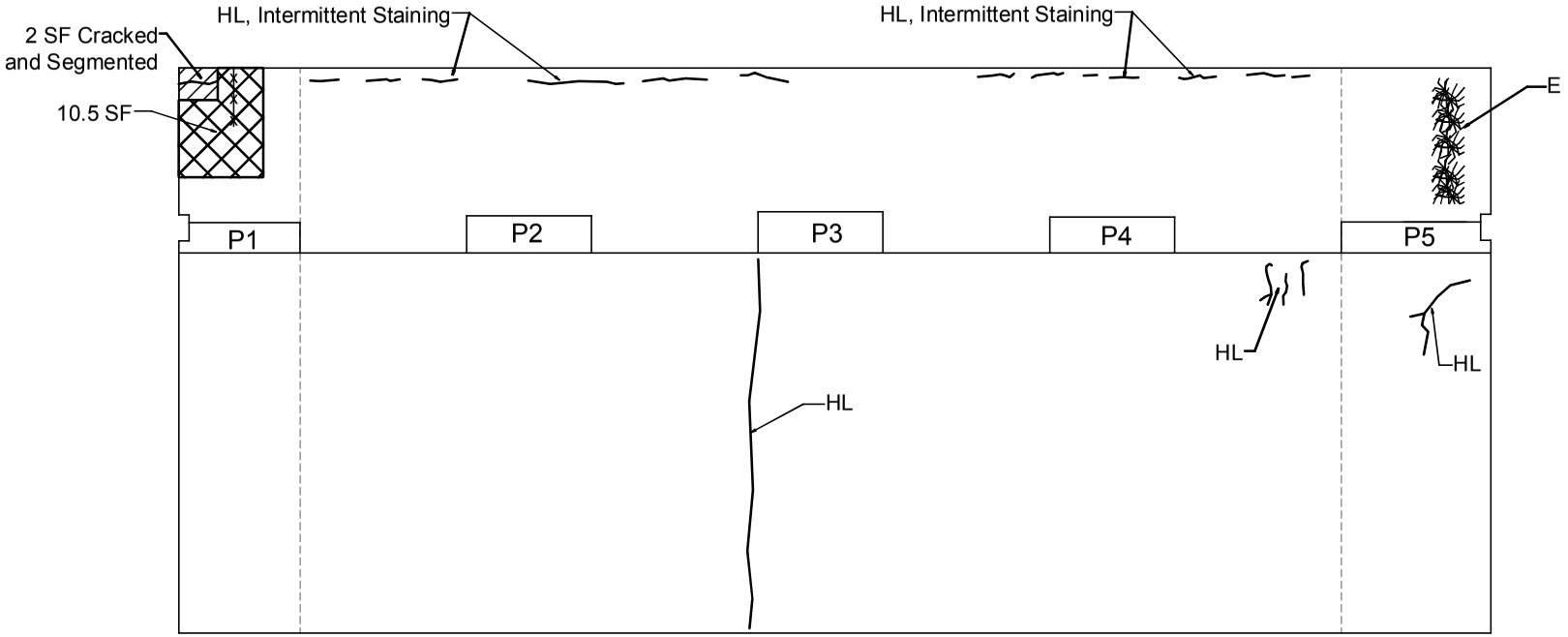

ELEVATION

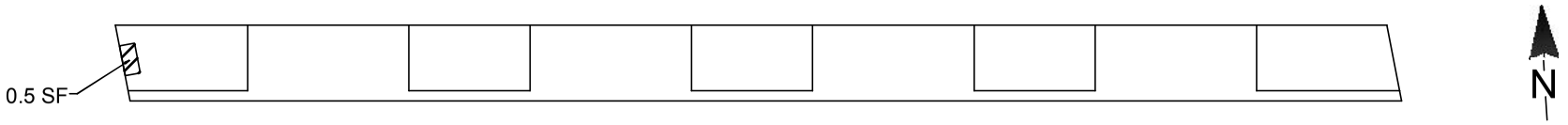

PLAN

LEGEND					
	Hollow		Spalling with Exposed Bars		Spall
HL	Hairline		Mapcracking		Crack

BIN: 1093561
I481 SB / RT 290

TOP OF DECK DETERIORATION SKETCH

NOT TO SCALE

DATE: 01/15/2014

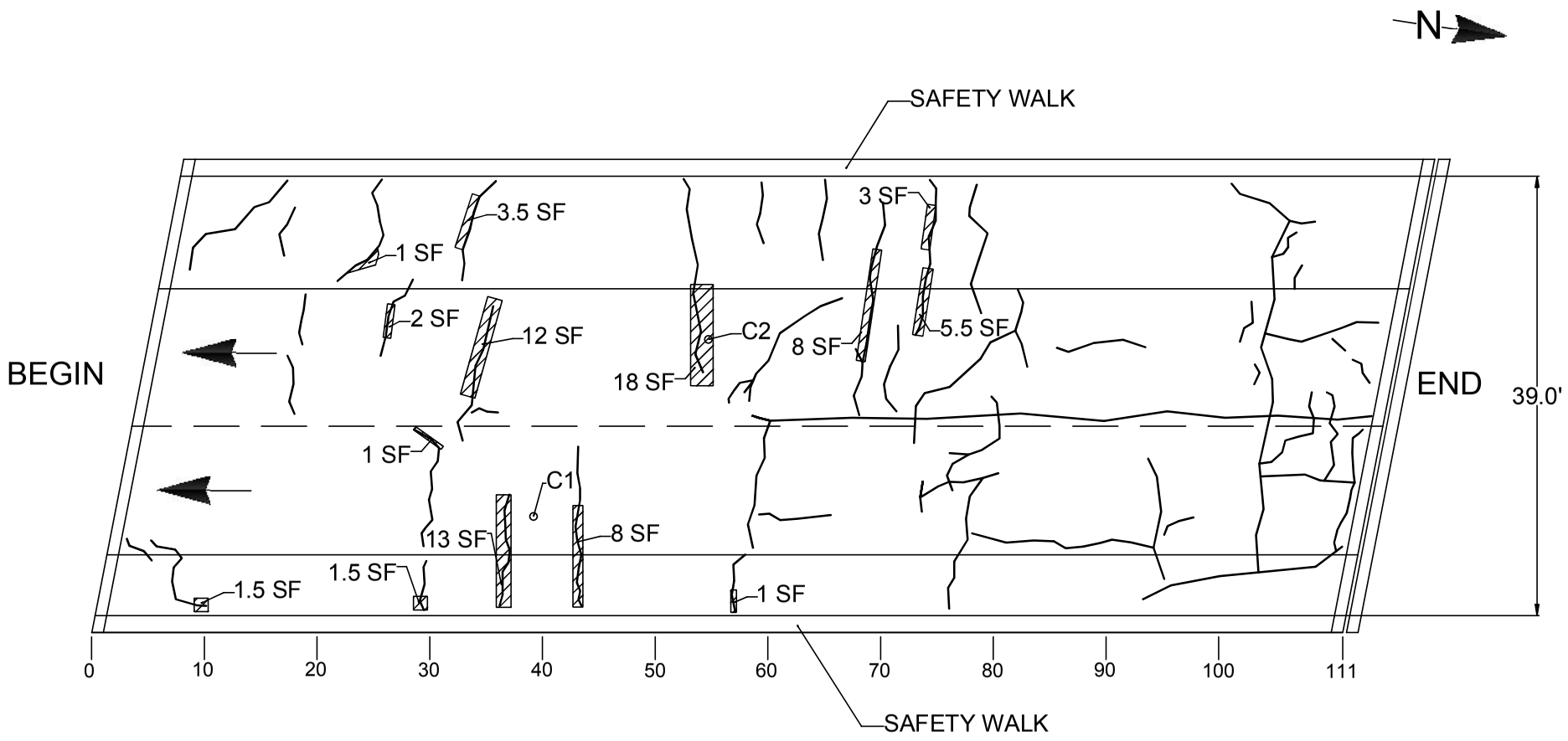

TOTAL DAMAGED AREA EQUALS 79 SF WHICH IS 1.8% OF DECK SURFACE

LEGEND

- Hollow Concrete
- Coring Location
- Crack

BIN: 1093561
I481 SB / RT 290

UNDERSIDE OF DECK DETERIORATION SKETCH

NOT TO SCALE

DATE: 01/15/2014

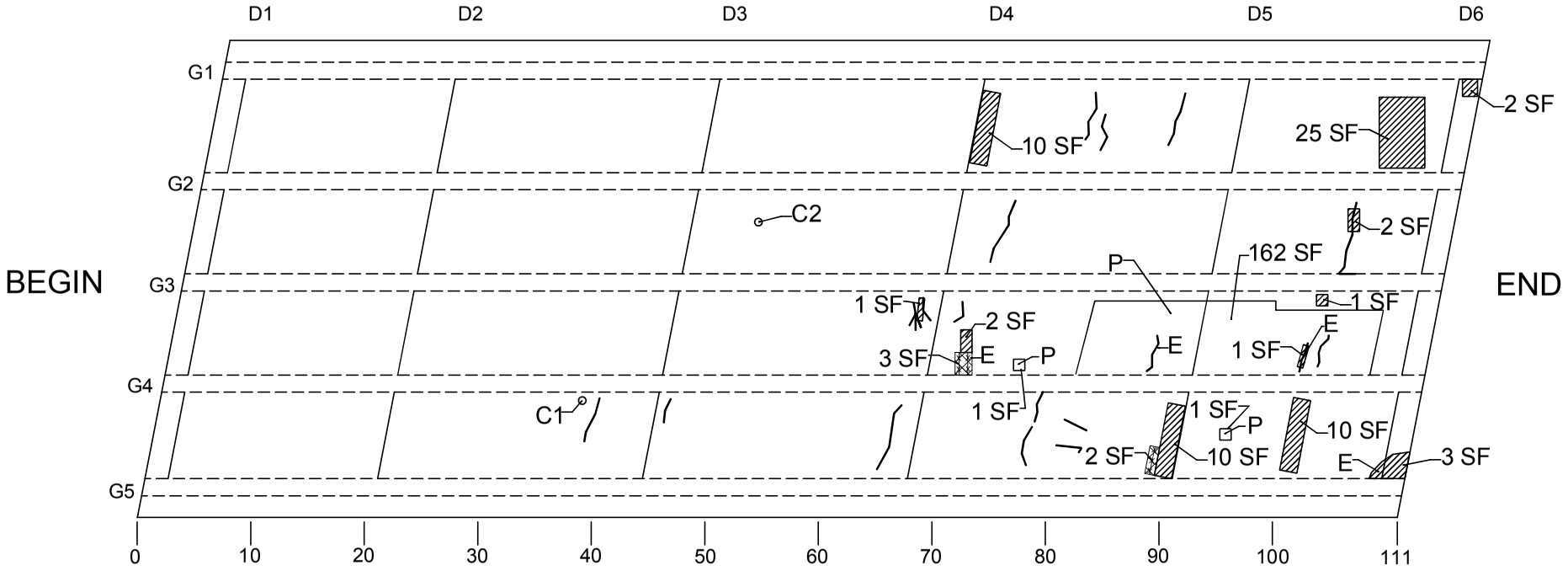

TOTAL DAMAGED AREA EQUALS 72 SF WHICH IS 1.5% OF DECK SURFACE

LEGEND

E	Efflorescence	P	Patch
	Hollow Concrete	D	Damp
	Coring Location		Crack
	Spalling with Exposed Bars		

IN-DEPTH PHOTO DOCUMENTATION

BIN: 1093561
I481 SB / RT 290 Bridge St

IN DEPTH INSPECTION
PHOTO LOCATION SKETCH

DATE: 01/15/2014

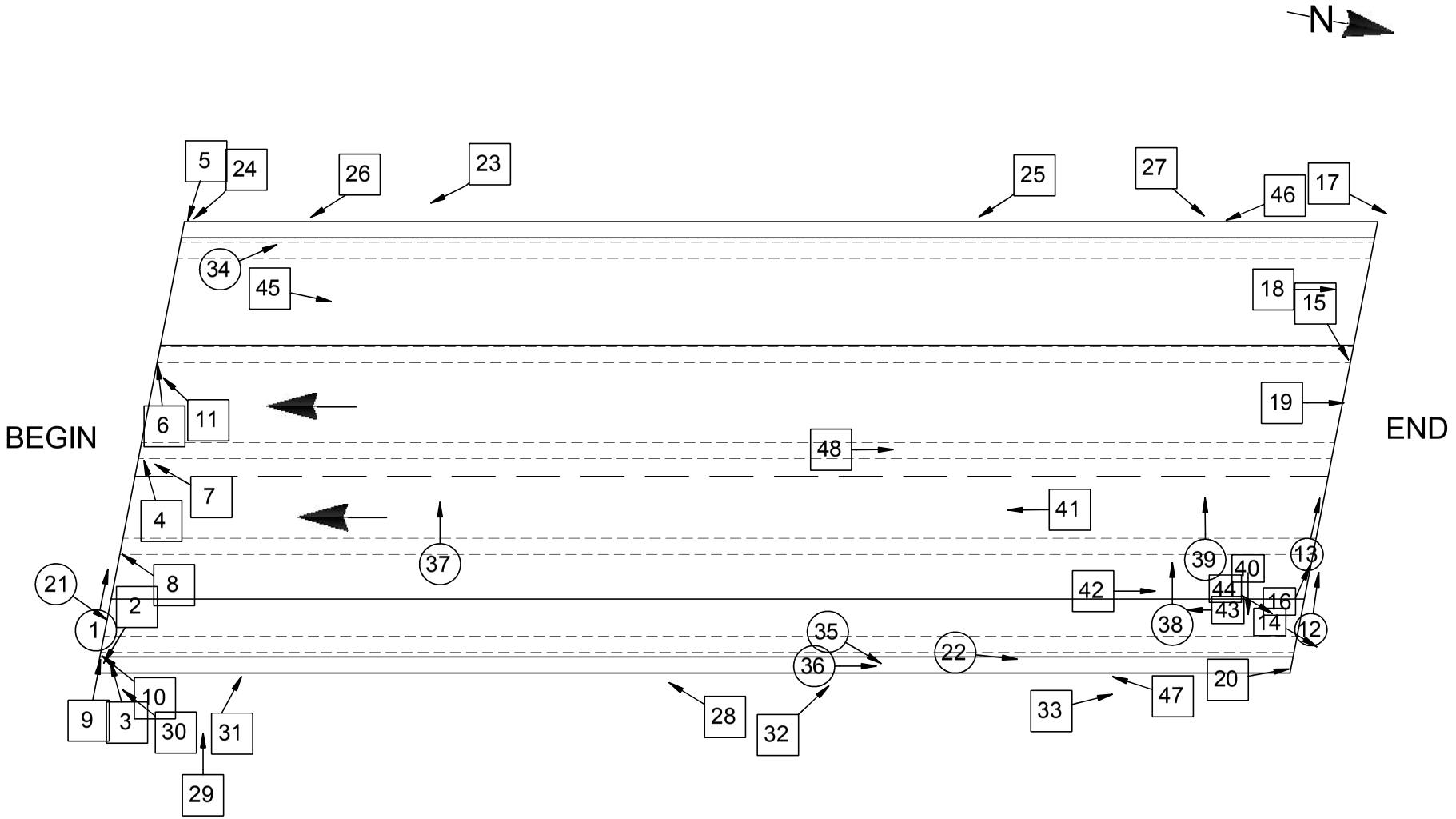



DESCRIPTION: BEGIN APPROACH AT BRIDGE DECK – LOOKING FROM RIGHT TO LEFT

PHOTO 1



DESCRIPTION: BEGIN ABUTMENT BACKWALL AT G5 – LOOKING FROM LEFT TO RIGHT

PHOTO 2



DESCRIPTION: BEGIN ABUTMENT BEARING G5 – RIGHT SIDE

PHOTO 3



DESCRIPTION: BEGIN ABUTMENT BEARING G3 – RIGHT SIDE

PHOTO 4



DESCRIPTION: BEGIN ABUTMENT PEDESTAL P1 – LEFT SIDE

PHOTO 5



DESCRIPTION: BEGIN ABUTMENT PEDESTAL P2 – RIGHT SIDE

PHOTO 6



DESCRIPTION: BEGIN ABUTMENT PEDESTAL P3– RIGHT SIDE

PHOTO 7



DESCRIPTION: BEGIN ABUTMENT PEDESTAL P4 – RIGHT SIDE

PHOTO 8



DESCRIPTION: BEGIN ABUTMENT PEDESTAL P5 – RIGHT SIDE

PHOTO 9



DESCRIPTION: BEGIN ABUTMENT BACKWALL – RIGHT SIDE

PHOTO 10



DESCRIPTION: BEGIN ABUTMENT STEM – LOOKING FROM RIGHT TO LEFT

PHOTO 11



DESCRIPTION: END ABUTMENT JOINT WITH DECK – LOOKING FROM RIGHT TO LEFT

PHOTO 12



DESCRIPTION: END ABUTMENT JOINT WITH DECK – LOOKING FROM RIGHT TO LEFT

PHOTO 13



DESCRIPTION: END ABUTMENT BEARING G5 – LEFT SIDE

PHOTO 14



DESCRIPTION: END ABUTMENT BEARING G2 – LEFT SIDE

PHOTO 15



DESCRIPTION: END ABUTMENT BACKWALL AT BAY 4 – LOOKING FROM RIGHT TO LEFT

PHOTO 16



DESCRIPTION: END ABUTMENT BACKWALL – LEFT SIDE

PHOTO 17



DESCRIPTION: END ABUTMENT BACKWALL AT BAY 1

PHOTO 18



DESCRIPTION: END ABUTMENT BACKWALL AT BAY 2

PHOTO 19



DESCRIPTION: END ABUTMENT BACKWALL – RIGHT SIDE

PHOTO 20



DESCRIPTION: BEGIN APPROACH DRAINAGE BEGIN RIGHT SIDE – LOOKING FROM BEGIN TO END

PHOTO 21

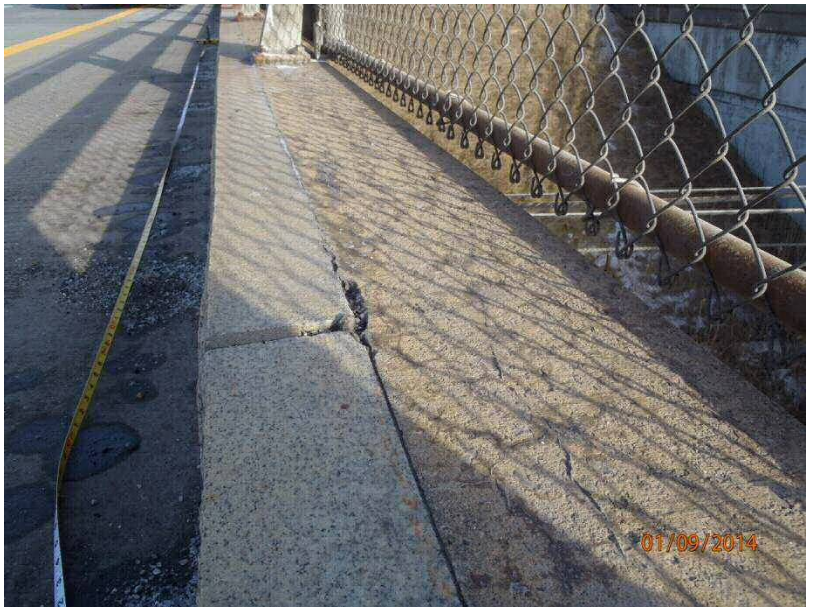

DESCRIPTION: SAFETY WALK RIGHT AT 2/3 SPAN – LOOKING FROM BEGIN TO END

PHOTO 22



DESCRIPTION: LEFT FASCIA – LOOKING FROM END TO BEGIN

PHOTO 23



DESCRIPTION: BEGIN LEFT FASCIA – LOOKING FROM END TO BEGIN

PHOTO 24



DESCRIPTION: LEFT FASCIA AT ¾ SPAN – LOOKING FROM END TO BEGIN

PHOTO 25



DESCRIPTION: LEFT FASCIA NEAR BEGIN – LOOKING FROM END TO BEGIN

PHOTO 26



DESCRIPTION: END LEFT FASCIA – LOOKING FROM BEGIN TO END

PHOTO 27



DESCRIPTION: RIGHT FASCIA MID SPAN – LOOKING FROM END TO BEGIN

PHOTO 28



DESCRIPTION: RIGHT FASCIA AT BEGIN

PHOTO 29



DESCRIPTION: RIGHT FASCIA AT BEGIN – LOOKING FROM END TO BEGIN

PHOTO 30



DESCRIPTION: BEGIN RIGHT FASCIA – LOOKING FROM BEGIN TO END

PHOTO 31



DESCRIPTION: RIGHT FASCIA AT 2/3 SPAN – LOOKING FROM BEGIN TO END

PHOTO 32



DESCRIPTION: END RIGHT FASCIA – LOOKING FROM BEGIN TO END

PHOTO 33



DESCRIPTION: LEFT RAILING AT BEGIN – LOOKING FROM BEGIN TO END

PHOTO 34



DESCRIPTION: RIGHT RAILING NEAR 2/3 SPAN – LOOKING FROM BEGIN TO END

PHOTO 35



DESCRIPTION: RIGHT RAILING NEAR 2/3 SPAN – LOOKING FROM BEGIN TO END

PHOTO 36



DESCRIPTION: DECK RIGHT LANE NEAR 1/3 SPAN – LOOKING FROM RIGHT TO LEFT

PHOTO 37



DESCRIPTION: DECK NEAR END – LOOKING FROM RIGHT TO LEFT

PHOTO 38



DESCRIPTION: DECK NEAR END (CLOSE-UP) – LOOKING FROM RIGHT TO LEFT

PHOTO 39



DESCRIPTION: DECK BAY 4 NEAR END – LOOKING FROM LEFT TO RIGHT

PHOTO 40



DESCRIPTION: DECK BAY 3 NEAR DIAPHRAGM 4 – LOOKING FROM END TO BEGIN

PHOTO 41



DESCRIPTION: DECK BAY 4 AT DIAPHRAGM 5 – LOOKING FROM BEGIN TO END

PHOTO 42



DESCRIPTION: DECK BAY 4 NEAR END – LOOKING FROM END TO BEGIN

PHOTO 43



DESCRIPTION: DECK BAY 4 AT END RIGHT

PHOTO 44



DESCRIPTION: PAINT FRAMING – LOOKING FROM BEGIN TO END

PHOTO 45



DESCRIPTION: PAINT LEFT FASCIA AT G1 – LOOKING FROM END TO BEGIN

PHOTO 46



DESCRIPTION: PAINT AND BLISTERS RIGHT FASCIA AT G5 – LOOKING FROM END TO BEGIN

PHOTO 47



DESCRIPTION: END ABUTMENT – LOOKING FROM BEGIN TO END

PHOTO 48

ASBESTOS SAMPLING SURVEY

Asbestos Sampling Survey

Location:

BIN 1-09356-1
Interstate Route 481 South Bound over Route 290

Prepared for:

New York State
Department of Transportation

PIN 3804.09.101

LaBella Project No. 97132

May, 1999

Table of Contents

Page

I. Project Summary 1

II. Site Description 1

III. Inspection Procedures 1

IV. Results 2

Certification 2

Figures and Table

I. Project Summary

In accordance with conditions of Term Agreement D010010, LaBella Associates, P.C. conducted an asbestos sampling survey of the Interstate Route 481 South Bound bridge over Route 290. Based on laboratory analyses of bulk samples collected, the following material was determined to contain asbestos:

BIN 1-09356-1 Interstate Route 481 South Bound over Route 290

Type of Material	Estimated Amount
Sheet Packing	8.1 Square Meters

II. Site Description

The Site is located in Onondaga County, New York. For the purpose of this report, the Site consists of the Interstate Route 481 South Bound bridge over Route 290 (See attached FIGURE 1 - Site Location Map).

III. Inspection Procedures

The following procedures were used to obtain the data for this Report:

A. A review of record drawings supplied by Region 3 personnel and a visual inspection of the subject structure were conducted to identify potential visible/accessible sources of asbestos-containing materials. Observations and notes were made to provide a description of the structure, and an estimate of the approximate amount, length, or area of ACM present.

B. Physical or operational constraints which might affect the removal of the ACM were identified and reported.

C. Bulk samples of suspected ACM were collected during the site inspection of the subject structure. Samples were taken from each homogeneous area that may contain ACM.

D. Samples were submitted for analysis. Preliminary PLM analyses of NOB materials were performed by LaBella Laboratories, a NYSDOH approved laboratory, to determine the presence and percentage of asbestos in each sample. TEM analyses of NOB materials, if necessary, were performed by New York Testing Laboratories, Inc.

E. Lab results were used to determine the approximate location, type, and amount of the verified ACM.

F. A drawing of the structure at the Site was created, in order to show sample locations and the approximate locations and amounts of confirmed ACM observed in accessible locations.

Only accessible areas were inspected. Inaccessible areas, such as areas within the bridge or the approaches to the bridge were not included in this inspection. No investigation was conducted by LaBella Associates to determine the presence of underground utilities on or in the immediate vicinity of the Site. Actual sample locations are shown in the attached FIGURE 2. Results of bulk sample analyses are tabulated in the attached TABLE.

IV. Results

BIN 1-09356-1 Interstate Route 481 South Bound over Route 290

Sheet Packing

Asbestos-containing sheet packing is located between the tops of the abutments and the deck slab at both ends of the bridge. Most of this material is presently covered by the bridge deck, although the edges of this sheet packing are exposed and visible at various locations.

It is estimated that the total amount of this asbestos-containing sheet packing material on the bridge is approximately 8.1 square meters. This estimate is based on field measurements taken at the time of the site visit.

The approximate locations of this asbestos-containing sheet packing are shown in FIGURE 2.

Certification

LaBella Associates, P.C. certifies the accuracy of this report, to the best of our knowledge, based on the information collected as described in the Inspection Procedures Section of this investigation.

Figures & Table

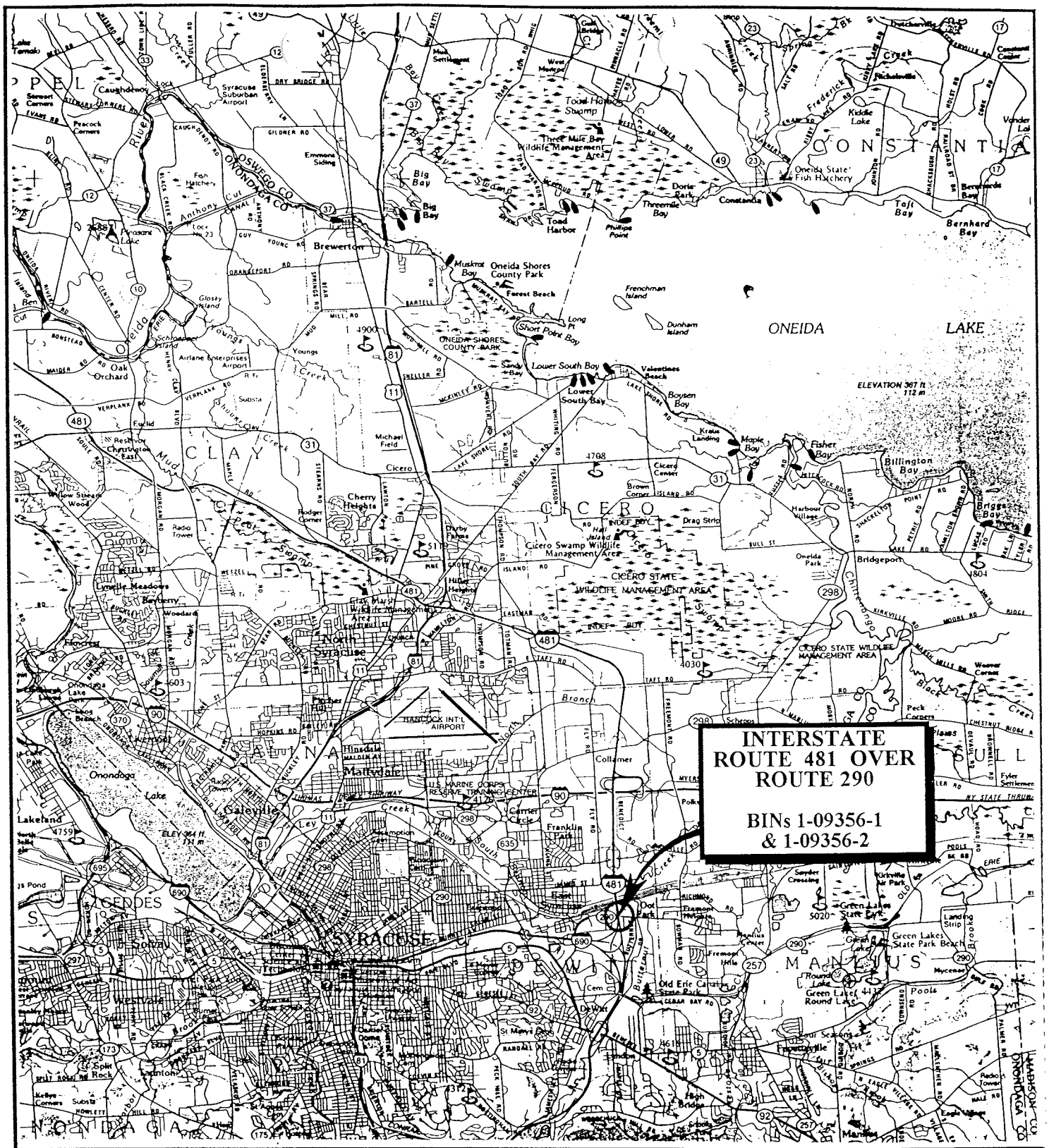

N

SCALE: 1" = 2000'

FIGURE 1
Site Location Map

Interstate Route 481
over Route 290
East Syracuse, New York

LABELLA

PROJECT NO. 97132

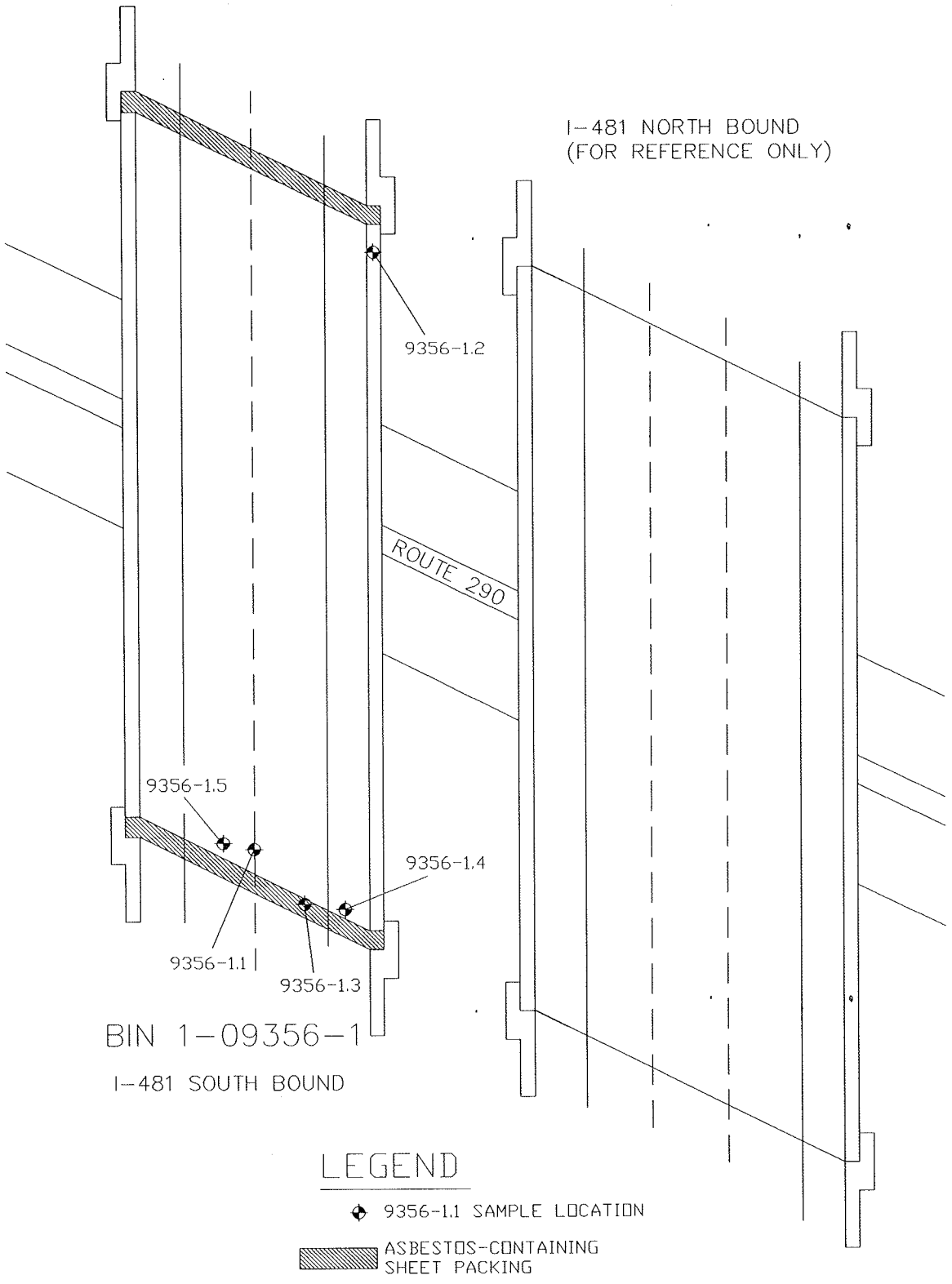

NORTH	PROJECT TITLE: ASBESTOS SAMPLING SURVEY 7 BRIDGES, ONONDAGA & OSWEGO COUNTIES, NEW YORK	PROJECT NO. 97132 PIN 3804.09.101
	FIGURE 2 : I-481 SOUTH BOUND OVER ROUTE 290 BIN 1-09356-1 SAMPLE LOCATIONS AND CONFIRMED ACM	NOT TO SCALE DATE: MAY, 1999

Bulk Sample Results Table

Asbestos Sampling Survey
BIN 1-09356-1
Interstate Route 481 South Bound over Route 290
Onondaga County, New York
LaBella Project # 97132
PIN 3804.09.101

Sample #	Sample Location	Type of Material	Results % Asbestos	Amount of Material	Specification Item No.
9356-1.1	South End of Bridge, on Inside I-Beam	Green Paint	None Detected	N/A	N/A
9356-1.2	North End of Bridge, on East I-Beam	Green Paint	None Detected	N/A	N/A
9356-1.3	**East End of Bridge Between Deck & Abutment**	**Sheet Packing**	**35% Chrysotile**	**8.1 Square Meters**	**15202.0627 (M)**
9356-1.4	East End of Bridge on Back Wall	Gray Masonry Coating	None Detected	N/A	N/A
9356-1.5	South End of Bridge, Beneath Bearing	Bearing Pad	None Detected	N/A	N/A

ATHENICA
ENVIRONMENTAL SERVICES INC.
Tel (718) 784-7490
Fax (718) 784-4085

BULK (NOB) ASBESTOS ANALYSIS BY POLARIZED LIGHT MICROSCOPY AND TRANSMISSION ELECTRON MICROSCOPY

3

CLIENT: NYS DOT, Region 3
LABORATORY ID #: 04-04-109
DATES OF ANALYSIS: 04/29/04

PROJECT: Bin # 1093561
ANALYT. METHODOLOGIES: ELAP 198.1, ELAP 198.4
DATE OF REPORT: 04/30/04

LABORATORY RESULTS

CLIENT #	LAB. ID #	LOCATION	%ORG	%ASI	%AII	PLM RESULTS	TYPE OF ASBEST.	TEM RESULTS	TYPE OF ASBEST.	POSIT. / NEGAT.
01	04-04-109-01	Steel paint coat G-5 bottom flange @4meters from end bearing	41.93	9.49	48.58	**ND**	NA	**ND**	NA	**Negat.**
02	04-04-109-02	Steel paint coat G-3 web @ 0.5 meters from end bearing	49.89	6.14	43.97	**ND**	NA	**ND**	NA	**Negat.**
03	04-04-109-03	Steel paint coat G-2 bearing end abutment	41.92	12.96	45.12	**ND**	NA	**ND**	NA	**Negat.**

E Sioukri

ANALYST
E. Sioukri

LABORATORY DIRECTOR
Spiro Dongaris

LABORATORY CERTIFICATION NUMBERS: NVLAP 101958, ELAP 10955

- Athenica Environmental Services Inc. (AES), is responsible only for information pertaining to samples taken by its employees.
- Samples will be stored for sixty (60) days. AES Inc., should be notified within this time frame for a true duplicate analysis.
- The report relates only to items tested. This report must not be used to claim product endorsement by NVLAP or any other agency of the U.S. Government. Test reports may not be reproduced except in full and with prior approval of AES Inc.
- The liability of Athenica Environmental Services Inc. with respect to the services charged, shall in no event exceed the amount of the invoice.

ATHENICA
ENVIRONMENTAL SERVICES INC.
45-09 GREENPOINT AVENUE
LONG ISLAND CITY, NY 11104
Tel. (718) 784-7490
Fax. (718) 784-4085

PROJECT NO. (ATHENICA FILE#) C003314
DATE 4/16/2004
METHOD OF SHIPMENT U.S. MAIL
INSPECTOR K. WAY
NUMBER OF SAMPLES 3
TYPE OF ANALYSIS REQUESTED [ ] PLM [X] NOB-PLM [X] NOB-TEM [ ] OTHERS
TURNAROUND TIME [ ] 6 HRS [ ] 12 HRS [ ] 24 HRS [X] OTHER HRS
COMMENTS ATT: CHRISTOPHER ANDERSON
333 E. WASHINGTON ST. SYRACUSE, N.Y. 13202

HOM. AREA	SAMLPLE #	SAMPLE DESCRIPTION	SAMPLE LOCATION	FIELD COMMENTS	LABORATORY RESULTS		
					PLM	PLM-NOB	TEM-NO
	01	STEEL PAINT COAT	G-5 BOTTOM FLANGE	@ 4 METERS FROM END BEAR			
	02	"	G-3 WEB	@ .5 METER FROM END BEARING			
	03	"	G-2 BEARING	END ABUTMENT			

TRANSMITTAL OF RESULTS :
[X] STANDARD
[ ] TELEPHONE RESULTS TO
[ ] FAX RESULTS TO

TELEPHONE # : (315) 428-4628
FAX # :

BATCH # : 04-04-109

CHAIN OF CUSTODY RECORD

RELINQUISHED BY :	Kent Way	DATE :	4/16/2004	TIME :	13:00
RECEIVED BY :	RELINQUISHED	DATE :	4/22/2004	TIME :	
ANALYST :		DATE :	4/29/2004	TIME :	

LABORATORY ACCREDITATION :
NVLAP# 101958 ELAP# 10955

LATEST BIENNIAL INSPECTION REPORT

Inspection Date: 4/17/2012 RC: 33 BIN: 1093561

Bridge Ratings

Carried: 481I 481I33012067 Crossed: 290 290 33012023 CheckValue: 1,793,427,225

Inspection Agency: 10 - NYSDOT Type of Inspection: 1 - BIENNIAL
GTMS: 302 -- Steel - Stringer/Multi-Beam or Girder
POSTINGS: See Gen Rec Page 1 for Postings at time of inspection.
Further Investigation Needed: No
State Highway Number: 70-7 Milepoint: 7.49 AADT/Yr: 9755 / 2002
Orientation: 8 - Northwest Political Unit: 0233 - Town of DEWITT Year Built: 1972
Total Spans: 1 Ramp Bridge Attached To Span: NA BIN: NA
General Recommendation: 6 Computed Condition Rating: 4.984

Abutment Ratings:	Beg Abut	End Abut
Joint with Deck	8	5
Bearings, Bolts, Pads	5	5
Seats and Pedestals	5	5
Backwall	5	4
Stem (Breastwall)	6	5
Erosion or Scour	6	6
Footings	9	9
Piles	8	8
Recommendation	5	5

Wingwall Ratings:	Beg Abut	End Abut
Walls	5	5
Footings	9	9
Erosion or Scour	6	6
Piles	8	8

Channel Ratings:	Channel
Stream Alignment	8
Erosion and Scour	8
Waterway Opening	8
Bank Protection	8

Approach Ratings:	Approaches
Drainage	4
Embankment	6
Settlement	6
Erosion	5
Pavement	5
Guide Railing	6

Number of Flags Issued:

RED: 0 Yellow: 0 Safety: 0

Vulnerability Reviews Recommended: 1=Yes, 2=No, 3=NA, X=NotActive

Hydraulic: 3	Overload: X	Steel: 2
Collision: 2	Concrete: X	Seismic: X

Inspector's Signature: CheckValue: 1,793,427,225 Date: 4/17/2012

Peter Riehlman,PE () (Inspector ID:3000052)

Signed copy of this inspection report is available in the appropriate NYSDOT Regional Office

Reviewed By: Date: 5/14/2012

James R. Manning,PE () (QC ID:3000023)

Signed copy of this inspection report is available in the appropriate NYSDOT Regional Office

Inspection Date: 4/17/2012 RC: 33 BIN: 1093561

Span Ratings

Carried: 481I 481I33012067 Crossed: 290 290 33012023 CheckValue: 1,793,427,225

Deck Element Ratings:	001
Wearing Surface	5
Curbs	4
Sidewalks, Fascias	4
Railings, Parapets	4
Scuppers	8
Gratings	8
Median	8
Mono Deck Surface	5

Superstructure Ratings:	001
Structural Deck	4
Primary Members	6
Secondary Members	6
Paint	4
Joints	8
Recommendation	6

Pier Ratings:	001
Bearings, Bolts, Pads	8
Pedestals	8
Top of Cap or Beam	8
Stem Solid Pier	8
Cap Beam	8
Pier Columns	8
Footings	8
Erosion or Scour	8
Piles	8
Recommendation	8

Utility Ratings:	001
Lighting	8
Sign Structure	8
Utilities and Support	5

Field Notes:

Field Date	Arrival	Departure	Temp (C)	Temp (F)	Weather Conditions
4/10/2012	3:00:00 PM	5:15:00 PM		45	cldy.
4/17/2012	1:00:00 PM	3:00:00 PM		55	cldy

Inspection Date: 4/17/2012 RC: 33 BIN: 1093561

Inspection Notes

Carried: 481I 481I33012067 Crossed: 290 290 33012023 CheckValue: 1,793,427,225

Note ID: 331210935610006

Beg Abut -- Abutment: Seats and Pedestals -- Rated 5, Was 4
End Abut -- Abutment: Seats and Pedestals -- Rated 5, Was 4
Referenced Photos: "4"
2012- bridge seats cleaned since last inspection

Note ID: 331210935610007

Approaches: Drainage -- Rated 4, Was 6
Referenced Photos: "14"
2012- sand buildup along the left curb and the approach prevents proper drainage

Note ID: 331210935610004

Approaches: Guide Railing -- Rated 6, Was 6
Referenced Photos:

Note ID: 33121093561000C

Span 001 -- Deck Elements: Wearing Surface -- Rated 5, Was 6
Referenced Photos:
2012- there is some cracking in the mondeck in spot locations but at this time rate 5.

Note ID: 33121093561000D

Span 001 -- Deck Elements: Curbs -- Rated 4, Was 6
Referenced Photos: "13", "14"
2012- sand buildup along the left curb and the approach prevents proper drainage

Note ID: 331210935610009

Span 001 -- Deck Elements: Sidewalks, Fascias -- Rated 4, Was 4
Referenced Photos: "6"
2012-Isolated spalls beginning to occur in both fascias.

Note ID: 33121093561000E

Span 001 -- Deck Elements: Railings, Parapets -- Rated 4, Was 6
Referenced Photos: "6"
2012- Two spalls evident at beg. rte. fascia.

Note ID: 33121093561000B

Span 001 -- Superstructure: Structural Deck -- Rated 4, Was 5
Referenced Photos: "8", "9", "10", "11", "12", "15"
2012- At the end left there are 3 efflor. areas 2.5' by 1', 1.5' by 1.5', and 1' by 1.5'

Inspection Notes

Carried: 481I 481I33012067 Crossed: 290 290 33012023 CheckValue: 1,793,427,225

Note ID: 33121093561000B - continued

At the end end right there is 3' by 3' efflor. area. and a 1' by 2' patch area

There is a 6" by 3' spall with exposed at the end right also.

Note ID: 33121093561000A

Span 001 -- Superstructure: Paint -- Rated 4, Was 4
Referenced Photos: "5"
2012-Paint is peeling on 15% of steel leaving surface rust.

In particular, spot rust and surface rust is occurring on the underside of flanges at G3,G4, and G5, along with the spot rusting along the right web of the right fascia girder, G5.

Note ID: 331210935610008

End Abut -- Abutment: Backwall -- Rated 4, Was 5
Referenced Photos: "1", "2", "3", "7"
2012- end left backwall has large crack and spall and several rust and water stains exist along backwall on left side.

Inspection Date: 4/17/2012 RC: 33 BIN: 1093561

Inspection Photos in Photo Number Order

Carried: 481l 481l33012067 Crossed: 290 290 33012023 CheckValue: 1,793,427,225

End Lt backwall



Photo Number: 1 Photo Filename: DSCN3325.jpg

Location:
End Lt backwall looking up from Bay 1



Photo Number: 2 Photo Filename: DSCN3327.jpg

Inspection Date: 4/17/2012 RC: 33 BIN: 1093561

Inspection Photos in Photo Number Order

Carried: 481I 481I33012067 Crossed: 290 290 33012023 CheckValue: 1,793,427,225

Location:
End backwall Bay 1



Photo Number: 3 Photo Filename: DSCN3341.jpg

Beg seat/Ped #3 (typ)



Photo Number: 4 Photo Filename: DSCN3314.jpg

Inspection Date: 4/17/2012 RC: 33 BIN: 1093561

Inspection Photos in Photo Number Order

Carried: 481I 481I33012067 Crossed: 290 290 33012023 CheckValue: 1,793,427,225

framing looking toward End



Photo Number: 5 Photo Filename: DSCN3313.jpg

Beg Rt fascia and underside of bridge rail



Photo Number: 6 Photo Filename: DSCN3324.jpg

Inspection Date: 4/17/2012 RC: 33 BIN: 1093561

Inspection Photos in Photo Number Order

Carried: 481I 481I33012067 Crossed: 290 290 33012023 CheckValue: 1,793,427,225

Location:
End backwall Bay 2



Photo Number: 7 Photo Filename: DSCN3329.jpg

End Rt fascia bay 4 deck



Photo Number: 8 Photo Filename: DSCN3335.jpg

Inspection Date: 4/17/2012 RC: 33 BIN: 1093561

Inspection Photos in Photo Number Order

Carried: 481I 481I33012067 Crossed: 290 290 33012023 CheckValue: 1,793,427,225

Location:
Bay 3 deck looking toward Beg



Photo Number: 9 Photo Filename: DSCN3336.jpg

Location:
End Bay 4 deck between int dia 3-4

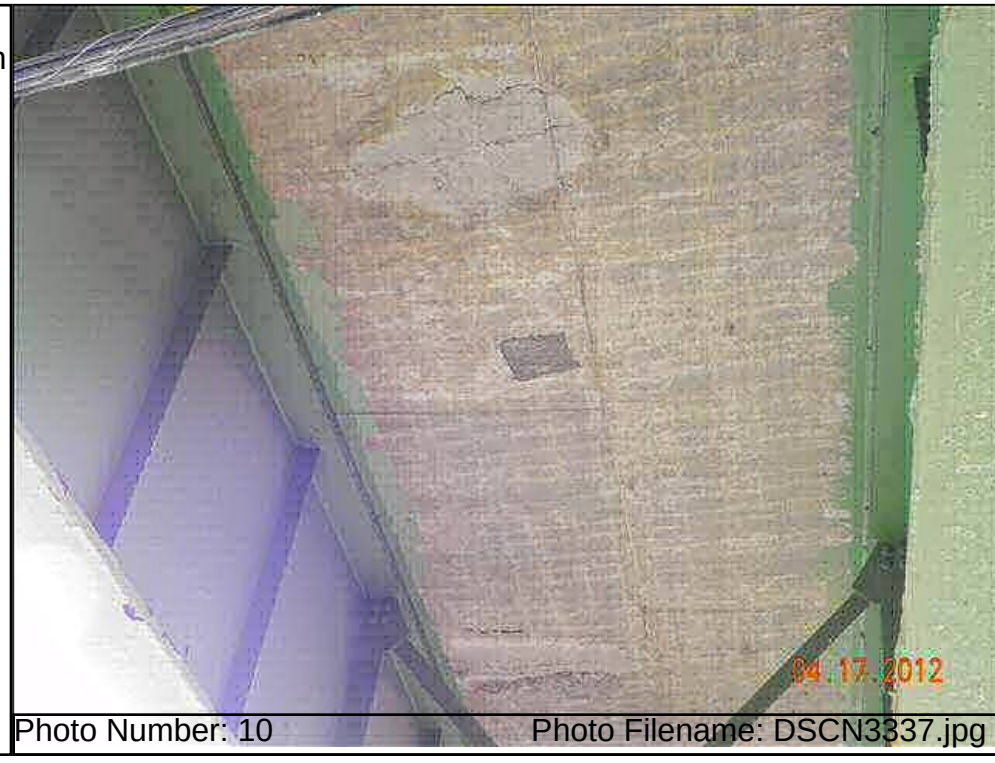

Photo Number: 10 Photo Filename: DSCN3337.jpg

Inspection Date: 4/17/2012 RC: 33 BIN: 1093561

Inspection Photos in Photo Number Order

Carried: 481I 481I33012067 Crossed: 290 290 33012023 CheckValue: 1,793,427,225

Location:
End Bay 4 deck between int dia 3-4



Photo Number: 11 Photo Filename: DSCN3338.jpg

Location:
End Rt top of deck

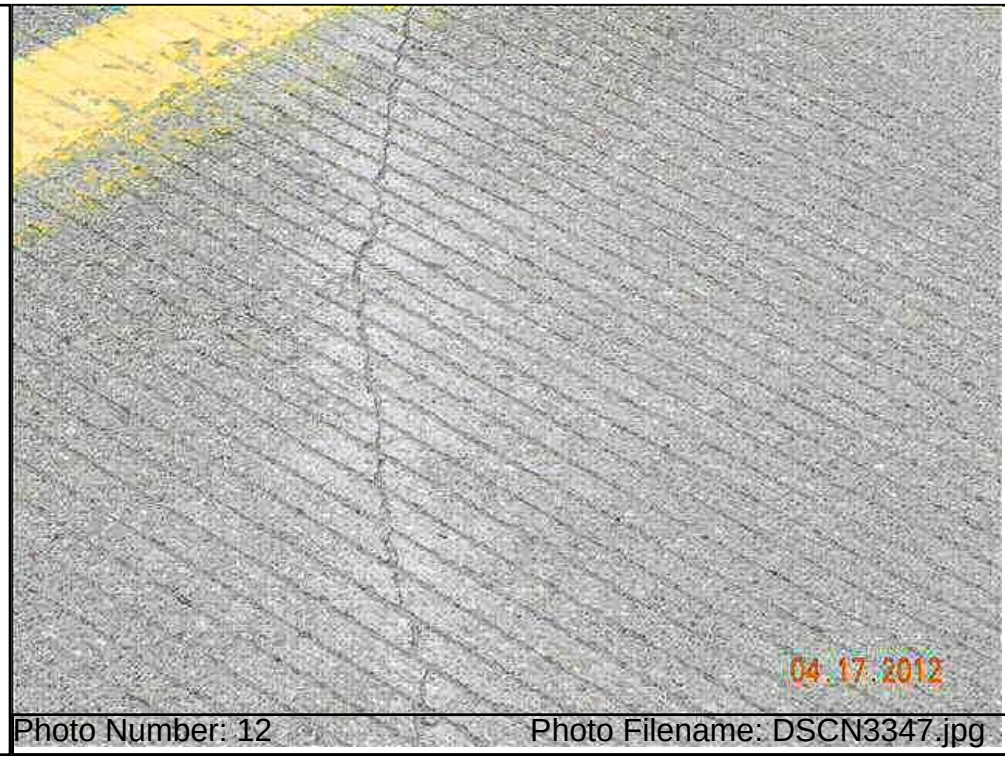

Photo Number: 12 Photo Filename: DSCN3347.jpg

Inspection Date: 4/17/2012 RC: 33 BIN: 1093561

Inspection Photos in Photo Number Order

Carried: 481l 481l33012067 Crossed: 290 290 33012023 CheckValue: 1,793,427,225

Lt curb looking toward Beg



Photo Number: 13 Photo Filename: DSCN3343.jpg

Location:
Beg Lt sand at curb



Photo Number: 14 Photo Filename: DSCN3346.jpg

Inspection Date: 4/17/2012 RC: 33 BIN: 1093561

Inspection Photos in Photo Number Order

Carried: 481l 481l33012067 Crossed: 290 290 33012023 CheckValue: 1,793,427,225

Location:
End deck crack looking Rt



Photo Number: 15 Photo Filename: DSCN3344.jpg

No Photo

Inspection Date: 4/17/2012 RC: 33 BIN: 1093561

Inspection Sketches in Sketch SysID Order

Carried: 481I 481I33012067 Crossed: 290 290 33012023 CheckValue: 1,793,427,225

Sketch ID: 331210935610000 Sketch Filename: LdRatNCL.12

Beg Abut -- Abutment: Backwall -- Rated 5, Was 6
Referenced Photos:

Region 3 LoadRatingFieldCheckForm

NYSDOT BRIDGE INSPECTION REPORT			
SHEET	1	OF	1

LOAD RATING FIELD CHECK FORM

BIN:	1093561		Insp. Date:	04/10/2012

Dead Load - Note Changes since Last load Rating or state "NONE":

NONE

Section Loss -Note Changes since Last load Rating or state "NONE":

NONE

Additional Notes:

NONE

Attachments:

Team Leader: Peter Riehlman

Inspection Date: 4/17/2012 RC: 33 BIN: 1093561

Inspection Sketches in Sketch SysID Order

Carried: 481I 481I33012067 Crossed: 290 290 33012023 CheckValue: 1,793,427,225

Sketch ID: 331210935610001 Sketch Filename: LdRatNCL.12

General Sketch for Bridge
Referenced Photos:

Region 3 LoadRatingFieldCheckForm

NYSDOT BRIDGE INSPECTION REPORT			
SHEET	1	OF	1

LOAD RATING FIELD CHECK FORM

BIN:	1093561	Insp. Date:	04/10/2012

Dead Load - Note Changes since Last load Rating or state "NONE":

NONE

Section Loss -Note Changes since Last load Rating or state "NONE":

NONE

Additional Notes:

NONE

Attachments:

Team Leader: Peter Riehlman

Inspection Date: 4/17/2012 RC: 33 BIN: 1093561

Inspection Sketches in Sketch SysID Order

Carried: 481I 481I33012067 Crossed: 290 290 33012023 CheckValue: 1,793,427,225

Sketch ID: 331210935610002 Sketch Filename: deck sketch.tif

Span 001 -- Superstructure: Structural Deck -- Rated 4, Was 5
Referenced Photos: "8", "9", "10", "11", "12", "15"

deck sketch

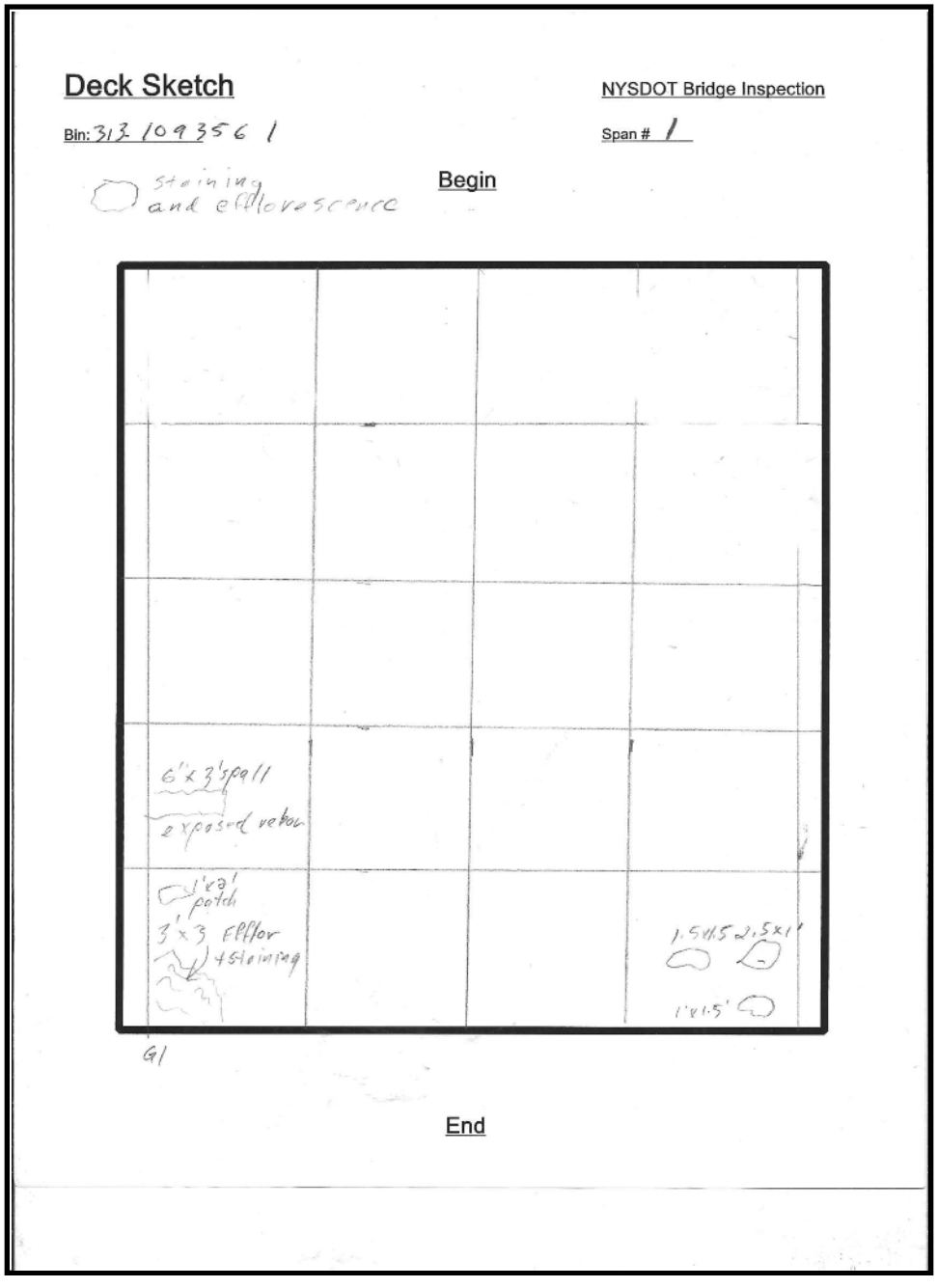

Inspection Date: 4/17/2012 RC: 33 BIN: 1093561

Gen. Rec., Postings, Federal Ratings, etc.

Carried: 481I 481I33012067 Crossed: 290 290 33012023 CheckValue: 1,793,427,225

Overall Condition:

GENERAL RECOMMENDATION: 6

Computed Condition Rating: 4.984

Problems Requiring Action:

NO Further Investigation Needed

NO Flags Issued

POSTINGS:

Inspector Confirmed existing Posting data as correct.
Posted Vertical Clearance ON the bridge is: No Posting
Posted Vertical Clearance UNDER the bridge is: No Posting
No Load Restriction is posted on this bridge

Overloads Observed:

NO Overload Vehicles were observed on this bridge

FEDERAL RATINGS:

NBI Deck Condition: 5
NBI Superstruct Condition: 7
NBI Substruct Condition: 7
NBI Channel Condition: N
NBI Culvert Condition: N

Diving Inspection Needs:

Diving Inspection Required? No Date of Last Diving Inspection: No Date

Inventory Problems:

Inventory Problems Exist? No

Miscellaneous:

Time Required to Inspect Bridge: 3 Hours

Lane Closure Needs: None Required

No Railroad Flagging Required

No Pedestrian Fence

There is a Snow Fence present

The BIN Plate is in OK condition

Inspection Date: 4/17/2012 RC: 33 BIN: 1093561

Gen. Rec., Postings, Federal Ratings, etc.

Carried: 481I 481I33012067 Crossed: 290 290 33012023 CheckValue: 1,793,427,225

Special Emphasis Inspection Required:

Non-Redundant/Fracture Critical Members - No
Pin and Hangers - No
Fatigue-Prone Welds - No
Non-Categorized Fatigue-Prone Details - No
Other (Specified in Text) - No

Special Emphasis Details:

No Special Emphasis Inspection Required.

General Notes To the Next Inspector:

Single scrape or gouge mark across bottom flange of both fascia girders above east bound traffic lane, as noted by inspector in 2004.

Improvements Observed:

Inspection Date: 4/17/2012 RC: 33 BIN: 1093561

Review Progress and Personnel Present at Inspection

Carried: 481I 481I33012067 Crossed: 290 290 33012023 CheckValue: 1,793,427,225

Inspection Submission Status:

Submitted to QC Engineer on: 4/26/2012
QC Submission Number: 353202

QC Review Completed: 5/14/2012
QC Engineer: James R. Manning

Submitted to Liaison Engineer on: 5/24/2012
Liaison Submission Number: 53204

Liaison Review Completed: 6/12/2012
Liaison Engineer: TODD M. HERMANN

Submitted for BIIS Processing on: 6/12/2012
BIIS Submission Number: .kp1

Current Status: Keypunched, Sent to BIIS
Check Value: 1,793,427,225

Personnel Present During Inspection:

Peter Riehlman - Team Leader
Rebecca Maurer - Assistant Team Leader
Tony Norland - lane closures
Paul Russell - lane closures

Inspection Date: 4/17/2012 RC: 33 BIN: 1093561

Inspection Access Requirements

Carried: 481I 481I33012067 Crossed: 290 290 33012023 CheckValue: 1,793,427,225

Equipment Required for Inspection

Access Requirement Changes WERE Noted During This Inspection.
This Listing is from the Inspection.

ACCESS CATEGORIES FOR ENTIRE BRIDGE
Required: Walking, Step Ladder, Small Lift, Shadow Vehicle

ACCESS CATEGORIES FOR SPAN 1
Required: Walking, Step Ladder, Small Lift, Shadow Vehicle

Inspection Date: 4/17/2012 RC: 33 BIN: 1093561

Culvert Measurements

Carried: 481I 481I33012067 Crossed: 290 290 33012023 CheckValue: 1,793,427,225

Culvert Measurements

NO CULVERT DATA FOR BIN 1093561

Standard Photos **RC: 33 BIN: 1093561**

Carried: 481I 481I33012067 Crossed: 290 290 33012023

1093561_LOCATION_MAP.JPG

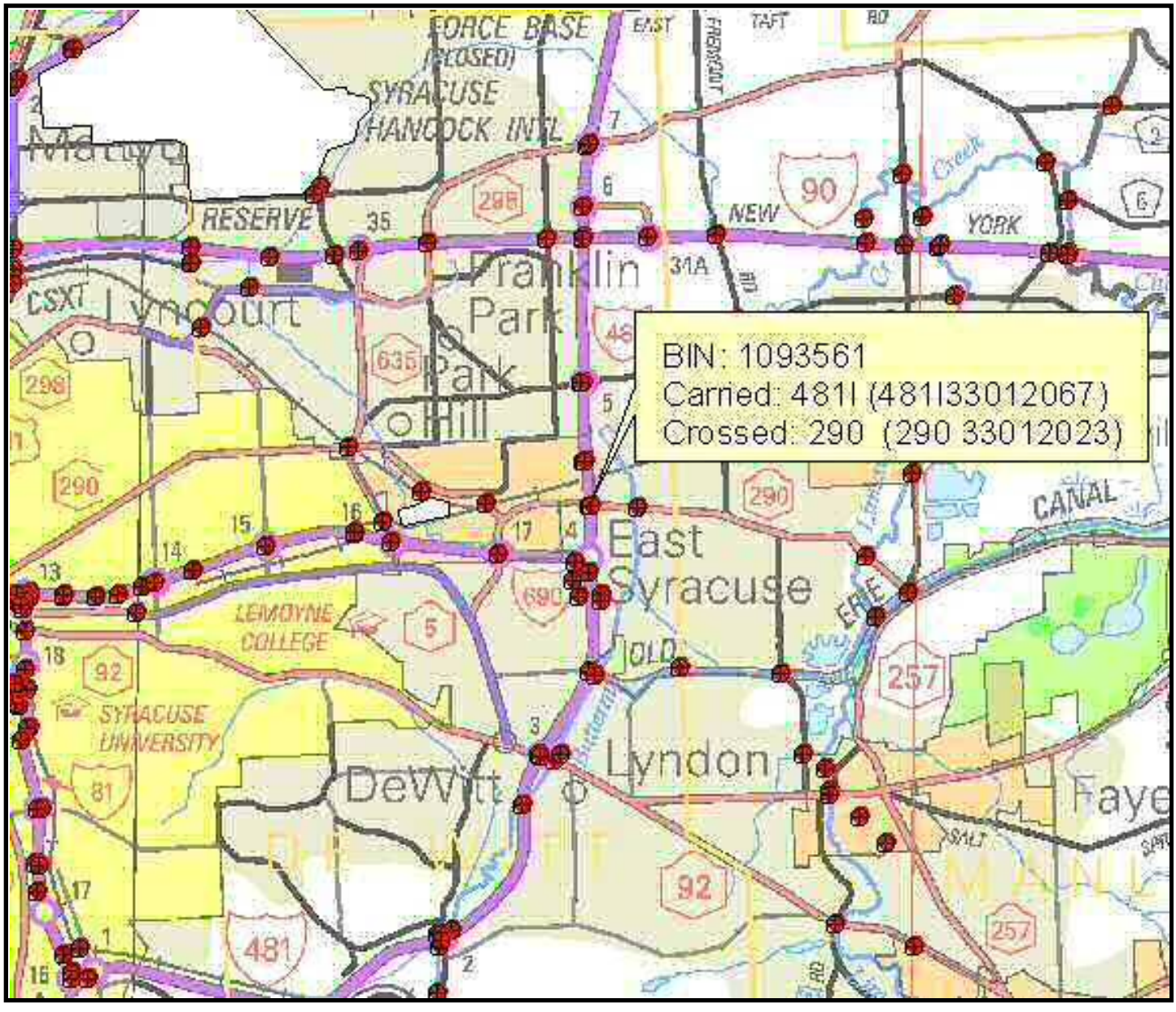

Standard Photos **RC: 33 BIN: 1093561**

Carried: 481I 481I33012067 Crossed: 290 290 33012023

1093561_QUAD_MAP.JPG

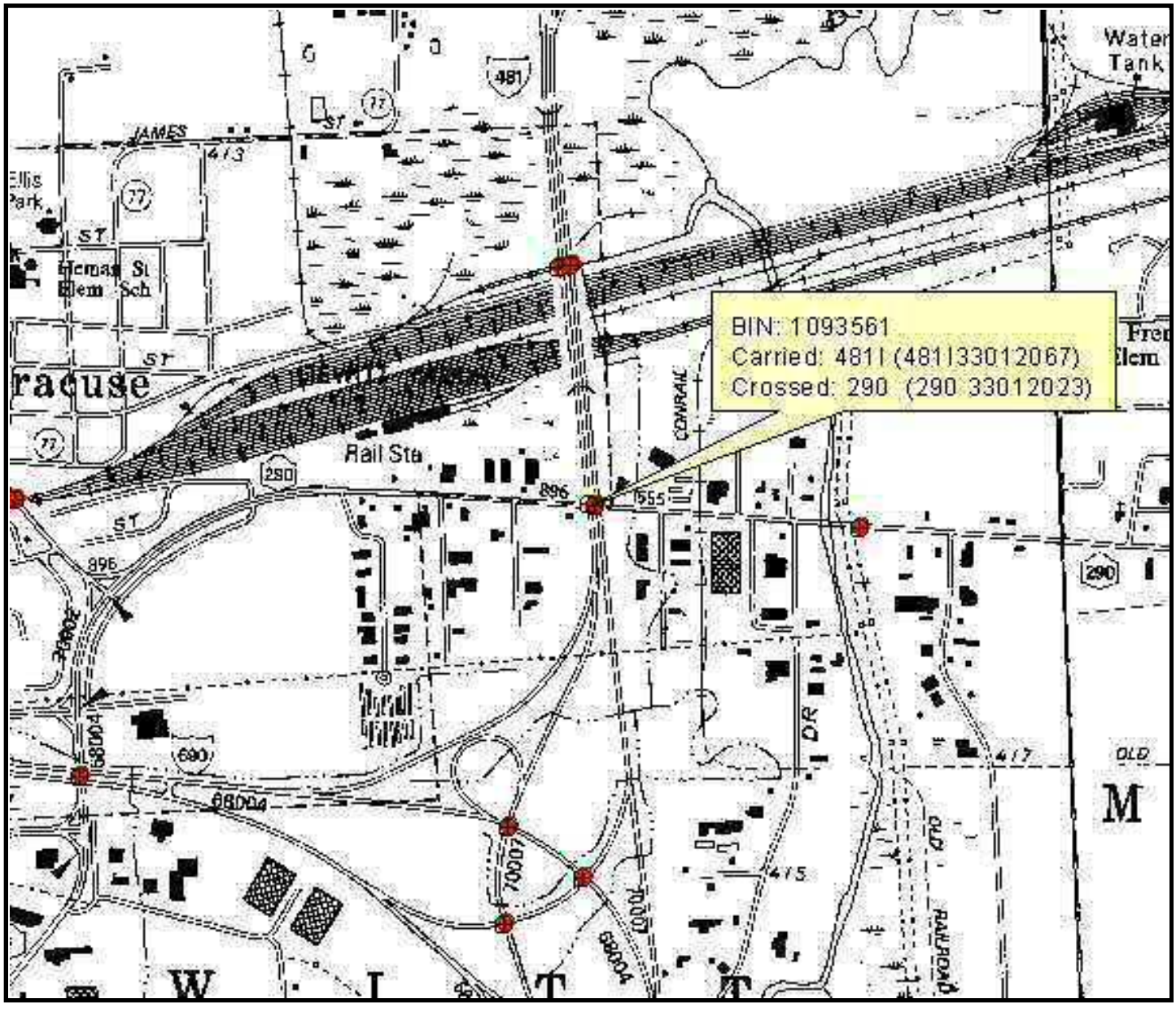

AbutmentEnd.12.jpg



Standard Photos **RC: 33 BIN: 1093561**

Carried: 481I 481I33012067 Crossed: 290 290 33012023

ApproachBegin.12.jpg



Standard Photos **RC: 33 BIN: 1093561**

Carried: 481I 481I33012067 Crossed: 290 290 33012023

ApproachEnd.12.jpg



Standard Photos **RC: 33 BIN: 1093561**

Carried: 481l 481l33012067 Crossed: 290 290 33012023

ElevationSpan1.12.jpg



Standard Photos **RC: 33 BIN: 1093561**

Carried: 481I 481I33012067 Crossed: 290 290 33012023

F2CrossedSpan1Left.12.jpg



Standard Photos **RC: 33 BIN: 1093561**

Carried: 481l 481l33012067 Crossed: 290 290 33012023

F2CrossedSpan1Right.12.jpg



Standard Photos **RC: 33 BIN: 1093561**

Carried: 481l 481l33012067 Crossed: 290 290 33012023

FramingSpan1.12.jpg



LEVEL 1 LOAD RATING SUMMARY SHEET

Region/County Region 3/Onondaga BIN 1093561
Feature(s) Carried and Crossed I-481 Southbound/I-290
Date of field inspection upon which Level 1 rating is based 1/15/2014

OVERALL BRIDGE RATTNGS (BASED ON LOWEST RATED ELEMENTS):

Total number of rating units 1

	H inventory	H operating	HS inventory	HS operating
Rating	H 37.92 (tons)	H 63.33 (tons)	HS 59.01 (tons)	HS 98.55 (tons)
Lowest rated element	Interior Girder G2, G3, and G4	Interior Girder G2, G3, and G4	Interior Girder G2, G3, and G4	Interior Girder G2, G3, and G4

Analysis method LFR Comments

Individual Rating Unit Level 1 values:

Rating unit span(s) 1

Main member ratings

	H inventory	H operating	HS inventory	HS operating
Rating	H (tons)	H (tons)	HS (tons)	HS (tons)
Lowest rated element				

Analysis method Comments

Floorbeam ratings

	H inventory	H operating	HS inventory	HS operating
Rating	H (tons)	H (tons)	HS (tons)	HS (tons)
Lowest rated element				

Analysis method Comments

Stringer ratings

	H inventory	H operating	HS inventory	HS operating
Rating	H 37.92 (tons)	H 63.33 (tons)	HS 59.01 (tons)	HS 98.55 (tons)
Lowest rated element	Interior Girder G2, G3, and G4	Interior Girder G2, G3, and G4	Interior Girder G2, G3, and G4	Interior Girder G2, G3, and G4

Analysis method LFR Comments

Certified by Date

Quality Control Engineer Signature Date
Agency or Company represented by certifier

Note:
-If connection ratings govern, record them under stringer ratings for stringer – floorbeam connection, floorbeam ratings for floorbeam-main member connections, etc.
-When Level 1 results indicated the need for load posting or other corrective action, the NYSDOT Regional Structures Engineer shall be notified immediately.
-Load ratings should be filed in the regional office within 60 days of completion of calculations.
-Bridges shall be flagged based on Level I results in accordance with the current NYSDOT flagging procedure.
-Bridge load posting, closure, etc. determinations shall be made as results are being produced.

PARSONS

100 Broadway
New York, NY 10005
Phone: 212-266-8300
Fax: 212-571-6825
www.parsons.com

TECHNICAL MEMORANDUM

FROM: Kian Siang Chau, P.E
NYSPE 082744

DATE: MARCH 20, 2014

RE: SEISMIC SCREENING SUMMARY
NEW YORK STATE DEPARTMENT OF TRANSPORTATION
D031085; PIN 3501.60; I-81

BIN: 1093561 (I-481 SB / RT 290)

This memorandum summarizes the seismic screening conducted for BIN 1093561 as part of the Interstate 81 Project in Syracuse, NY. The purpose of the screening is to determine if seismic retrofits are warranted at the superstructure to substructure connection, and if further seismic evaluation of the structure is required. This memorandum will give the screening results, retrofits required and recommendations for further seismic evaluation of the structure.

SCREENING PROCEDURE

The seismic screening was performed in accordance with the FHWA Seismic Retrofitting Manual for Highway Structures: Part 1 - Bridges, January 2006. As per the referenced manual, seismic screenings were performed for both lower level and upper level earthquake ground motion. The lower level earthquake ground motion has a reasonable likelihood of occurrence within the life of the bridge (50% probability of exceedance within a 75 year bridge life). The upper level earthquake ground motion has a finite likelihood of occurrence within the life of the bridge (7% probability of exceedance within a 75 year bridge life).

Values for the spectral acceleration for the Syracuse area used in the screening are as follows:

- Lower Level Earthquake Ground Motion for a Short Period (0.2 seconds): $S_S = 0.0251$
- Lower Level Earthquake Ground Motion for a Long Period (1.0 seconds): $S_1 = 0.0076$
- Upper Level Earthquake Ground Motion for a Short Period (0.2 seconds): $S_S = 0.139$
- Upper Level Earthquake Ground Motion for a Long Period (1.0 seconds): $S_1 = 0.047$

These values are considered constant and are the same for all seismic screenings of bridges in the Syracuse area.

The Site Class is based on the soil conditions at the bridge location. It was determined that this parameter has little effect on the results of the seismic screening because the spectral acceleration values for the Syracuse area are small. Based on this, a site class of D was used for all seismic screenings of bridges in the Syracuse area.

Bridge parameters used in the seismic screening were retrieved from the record drawings and WinBolts data.

The seismic screening takes into account the anticipated service life, importance, and the seismic exposure of the bridge to determine a seismic retrofit category (SRC). The SRC is then used to determine seismic evaluation methods and retrofit measures. There are four SRCs, A through D. Seismic retrofit category A is the lowest category; bridges in this category do not require retrofits or further seismic evaluation. Seismic retrofit category D is the highest category; bridges in this category requiring the most rigorous seismic evaluations and retrofits.

SCREENING RESULTS

The SRC for the bridge is "**C**" for lower level earthquake ground motion and "**B**" for upper level earthquake ground motion.

RETROFITS REQUIRED

No seismic retrofits are required for the bridge superstructure to substructure connection.

RECOMMENDATIONS FOR FURTHER SEISMIC EVALUATION

No further seismic evaluation is required for lower level earthquake ground motion. For the upper level earthquake ground motion, it is recommended that the capacities of the bearings are checked as per Section 5.2 of the referenced manual.

Retrofit cost estimates will be provided after any further required seismic evaluations are completed.

BRIDGE DECK EVALUATION REPORT

RECOMMENDATIONS

The bridge deck inspection findings and evaluation are used as a tool for developing the scope of work and cost estimates for the development and comparison of alternatives for the overall project.

The total damaged area of the deck is 1.8% of the top and 1.5% of the underside of the deck area. The cores indicate the reinforcement steel is 4.0 inches below the surface of the deck. The lab test indicate that chloride ion concentrations at all the sample locations are significantly higher than the corrosion threshold for steel.

Due to the age, condition and high chloride ion content of the bridge deck concrete, the bridge deck should be rehabilitated or replaced to meet the current standards and to mitigate excessive future maintenance costs.

ALTERNATIVES

- Rehabilitation Alternative - 2 inches Bonded Concrete Overlay
  - Scope

    The scope of this alternative will include the complete removal of the bridge railings, curb and safety walks, and fascias to the level of the original top of the deck. The lower portion of the fascia or deck soffit is mostly damaged and will require reconstruction. The joint will be removed. The top 2 inches of the entire deck will be removed and areas of deteriorated concrete must be removed to at least 1 inch below the level of the reinforcement steel and to the horizontal and vertical limit of any detectable hollow areas. Damaged areas at the underside of the deck will require full depth reconstruction. Any corrosion of the reinforcement steel will be sandblasted or hydro-blasted. Reinforcement with significant section loss will be replaced. Partial and full depth removal areas will be reconstructed to adjacent grade. The proposed deck overlay will be a 2 inches thick bonded concrete overlay yielding a nominal 9.5 inches standard thickness deck. A new single-sloped concrete barrier and a new armorless joint will be installed. The Level 1 Load Rating for the final condition was found to be acceptable.

- Useful Life Expectancy

  The removal of the top 2 inches of the existing deck will remove the portion of the deck with high chloride ion concentrations. It can be anticipated that chloride ions will continue to migrate into the remaining deck to the reinforcing steel resulting in further corrosion-related deterioration of the deck surface. Concrete admixtures will be included in the bonded concrete overlay to impede the continued penetration of chloride into the deck from the surface. This alternative will result in an extended useful life expectancy estimated at 20 years.

The design life of the project is 30 years (ETC + 30). This alternative does not meet the project objectives of obtaining 30 years of service life and is not evaluated further.

- Rehabilitation Alternative – 100% Deep Removal and Partial Deck Reconstruction
  - Scope

    The scope of this alternative will include the complete removal of the bridge railings, curb and safety walks, and fascias to the level of the original top of the deck. The lower portion of the fascia or deck soffit is damaged and will require reconstruction. The joint will be removed. The scope of this alternative will include partial depth reconstruction with removal of the concrete to at least 1 inch below the top mat of the reinforcement steel. Additionally, any further areas of deteriorated concrete detected will require full depth removal. Any corrosion of the reinforcement steel will be removed by sandblasting or hydro-blasting. The proposed deck partial reconstruction will be a nominal 6.25 inches thick concrete deck yielding a 9.5 inches standard thickness deck. A new single-sloped concrete barrier and a new armorless joint will be installed. The Level 1 Load Rating for the final condition was found to be acceptable.
  - Useful Life Expectancy

    This alternative will provide a useful life expectancy is estimated at 35 years.
  - Cost Estimate

    The estimated cost for this alternative is $468,000. The Engineer's Opinion of Probable Construction Cost worksheet is at the end of this section.

- Replacement Alternative – Cast-In-Place Concrete
  - Scope

    This scope of this alternative will include the complete demolition of the existing bridge deck, railings, curb and safety walks, fascias and bridge joint. The bridge deck will be replaced with a new 9.5 inches standard thickness concrete deck. A new single-sloped concrete barrier and a new armorless joint will be installed. The Level 1 Load Rating for the final condition was found to be acceptable.
  - Useful Life Expectancy

    This alternative will provide a useful life expectancy is estimated at 40+ years.
  - Cost Estimate

    The estimated cost for this alternative is $532,000. The Engineer's Opinion of Probable Construction Cost worksheet is at the end of this section.

- Replacement Alternative – Pre-cast Concrete Deck Panels
  - Scope

    The scope of this alternative is similar to the Cast-In-Place Concrete Deck Replacement Alternative except the deck structure will be precast panels. This alternative offers reduced construction time over conventional construction.
  - Useful Life Expectancy

    This alternative will provide a useful life expectancy is estimated at 40+ years.
  - Cost Estimate

    The comparison of accelerated construction to conventional construction is beyond the current scope of this evaluation.

IN-DEPTH INSPECTION REPORT

D031085 P.I.N. 3501.60

ELEMENT SPECIFIC BRIDGE WORK

B.I.N. 3/3 1093562

TEAM LEADER George H Stam, P.E. 056216
NYSPE LICENSE #

ASSISTANT TEAM LEADER Timothy Olmstead

FEATURE CARRIED I-481 Northbound

FEATURE CROSSED NYS Rt. 290

DATE FIELD WORK BEGAN 1/13/14

DATE FIELD WORK COMPLETED 1/15/14

TABLE OF CONTENTS

- STRUCTURE IDENTIFICATION
- INTRODUCTION
- PROJECT LOCATION MAP
- IN-DEPTH CONDITION DOCUMENTATION
- PLANS & SKETCHES
- IN-DEPTH PHOTO DOCUMENTATION
- ASBESTOS SAMPLING SURVEY
- LATEST BIENNIAL INSPECTION REPORT

STRUCTURE IDENTIFICATION

a. Bridge Identification Number (BIN): 3/3 1093562
b. Reference Marker: 481I 3301 2067
c. Region: NYSDOT Region 3
d. County: Onondaga
e. Town: Dewitt
f. Feature Carried: I-481 Northbound
g. Feature Crossed: NYS Rt. 290

INTRODUCTION

a. Bridge History
   i. Year Built: 1972
   ii. Bridge Type: Single Span, Steel Multi-girder
   iii. Span Length: 111 feet
   iv. Out-to-Out Width: 54 feet
   v. Structural Ratings and Rankings
      1. Federal Sufficiency: 87.4 (Apr. 2012)
      2. Condition Rating: 5.031 (Apr. 2012)
      3. General Recommendation: 5 (Apr. 2012)
   vi. Live Load Posting (HS25): No
   vii. National Highway System (NHS): Yes
   viii. Previous work Done:
      1987 – Replace wearing surface (asphalt concrete overlay) with concrete overlay
      1992 – Clean and paint metal surfaces
      1999 – Asbestos testing
      1999 – Waterproofing bridge deck and corrosion inhibitor
      2003 - Remove begin armor angle and replace with concrete header
      - Replace end ACJ
      - Misc.repair of concrete deck
      - Misc.repair of concrete at abutments
      2004 – Asbestos testing
   ix. Planned Future Work: N/A

b. Highway Classification

i. Functional Classification: Urban Principle Arterial - Interstate

ii. Traffic Volumes

YEAR	PROJECTED AADT
2014	25226
2034	37485
2054	55700

iii. Plan for Maintenance and Protection of Traffic:
Maintenance and Protection of traffic will be achieved by staged construction.

PROJECT LOCATION MAP

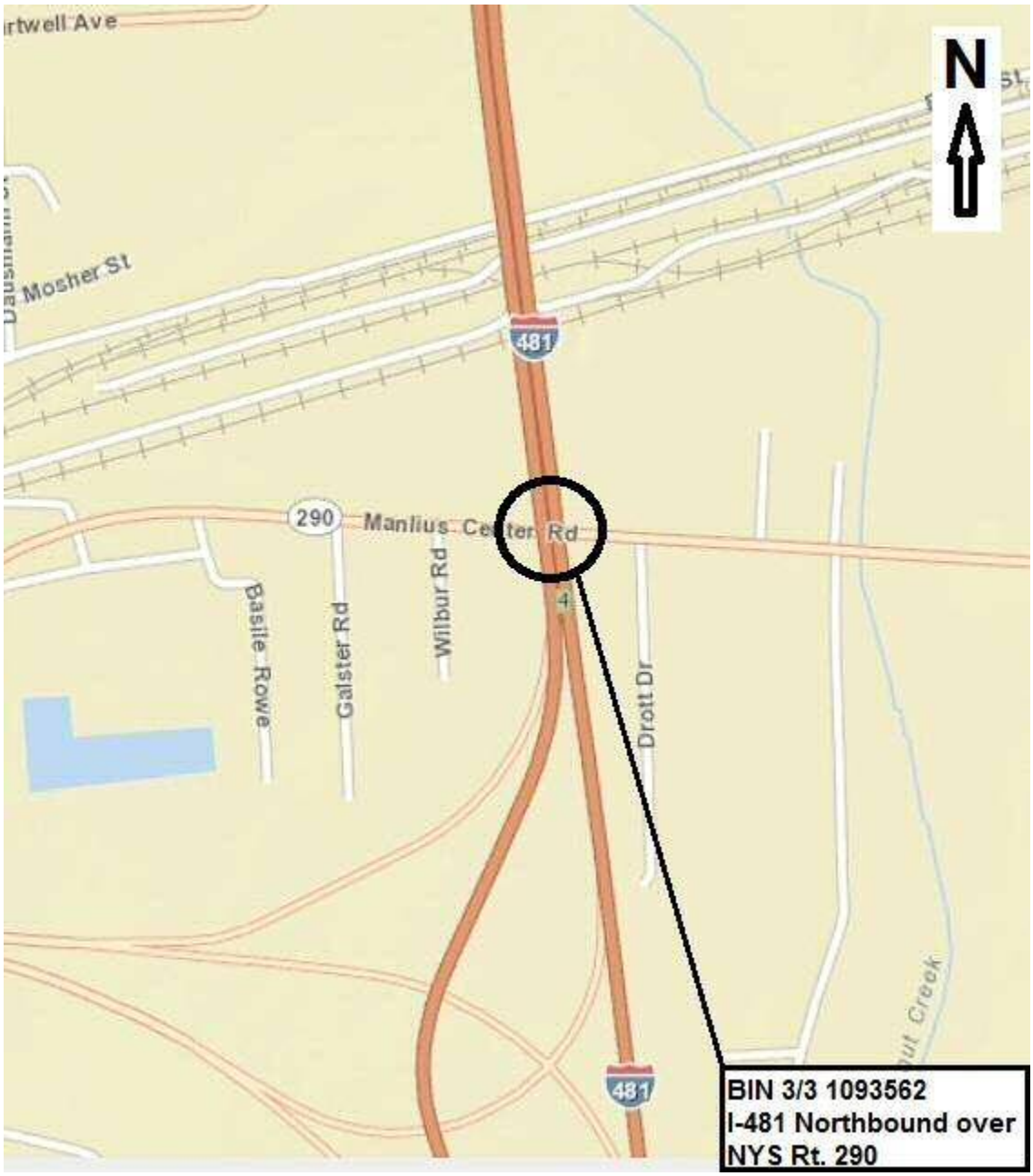

IN-DEPTH CONDITION DOCUMENTATION

NYS DEPT. OF TRANSPORTATION
BRIDGE INSPECTION REPORT **BIN:** 1093562 **SHEET:** 1 **OF** 4 **DATE:** 1/13/2014 & 1/15/2014

FEATURE CARRIED: I-481 NB
FEATURE CROSSED: NYS RT. 290

TEAM LEADER: G. STAM
ASSIST. TEAM LEADER: T. OLMSTEAD

ITEM	REMARKS	PHOTO NO.
	BEGIN ABUTMENT ITEMS	
TP 349-22	Begin Abutment - Joint with Deck: Top of deck items were not inspected.	
TP 349-24	Begin Abutment – Bearings: The begin bearing are fixed. The fascia bearings G1 and G6 have pack rust between the rocker and the masonry plate that restricts movement (Photos 1 & 2). The left and right bolts at bearing G6 are in place but sound dull when struck and are likely detached (Photo 2). The interior bearings are in good condition and appear to be functioning properly.	1,2
TP 349-26	Begin Abutment - Seat and Pedestals: Seat - The seat is in good condition with no hollow areas or significant cracks detected. Pedestals - The top of pedestal P1 is cracked and has a 0.5 square foot of hollow sounding concrete at the left rear (Photo 3). The crack wraps down the left side and there is spalling up to 1.5 inches deep along the crack. The left side is mapcracked with light efflorescence. Pedestal P6 is cracked and has a 0.5 square foot spall at the top right rear (Photo 4). See the Begin Abutment Deterioration Sketch.	3,4
TP 349-28	Begin Abutment – Backwall: There is tight mapcracking throughout the backwall. In bay 3, there are more pronounced mapcracks with efflorescence and a 6 square foot area of scaling of the concrete surface (Photo 5). The top of the right side is mapcracking with dampness and efflorescence staining from leakage down the backwall and there is a one square foot spall along the diagonal deck haunch joint (Photo 6). At the bottom right, there is 0.5 square foot area of dampness and spalled concrete above pedestal P6 (Photo 4). See the Begin Abutment Deterioration Sketch.	4,5,6
TP 349-30	Begin Abutment – Stem: The stem has been recently repaired with several patched areas. The left and right sides have tight mapcracking (Photo 7). See the Begin Abutment Deterioration Sketch.	7
	END ABUTMENT ITEMS	
TP 349-23	End Abutment - Joint with Deck: Top of deck items were not inspected.	
TP 349-25	End Abutment – Bearings: The end bearings are expansion. The fascia bearings are slightly rusted (Photos 8 & 9). The interior bearings are in better condition. All of the bearings are extended at 40 ºF (Photos 9 & 10) and may not be functioning properly.	8,9,10
TP 349-27	End Abutment - Seats and Pedestals: Seat - The seat is in good condition with no hollow areas or significant cracks detected.	

ITEM	REMARKS	PHOTO NO.
	Pedestals - The top of pedestal P1 is cracked at the left side (Photo 8). The crack wraps down the left side. See the End Abutment Deterioration Sketch. The remaining pedestals are in good condition with no significant cracks or hollow areas detected.	8
TP 349-29	End Abutment – Backwall: The backwall is tight hairline cracked over approximately 30% of the surface. At the end left, the top of the backwall is cracked with efflorescence along the edges of a patch and there is a 0.5 square foot x 6 inches deep spall at the deck haunch (Photo 11). There is a 4 square foot mapcracked area with efflorescence at the end right backwall (Photo 12). See the End Abutment Deterioration Sketch.	11,12
TP 349-31	End Abutment – Stem: The stem is tight hairline cracked over approximately 30% of the surface (Photo 13). There are scattered more pronounced hairline cracks. See the End Abutment Deterioration Sketch.	13
	APPROACH ITEMS	
TP 349-53	Approach - Drainage: Top of deck items were not inspected.	
TP 349-55	Approach - Settlement: Top of deck items were not inspected.	
TP 349-57	Approach - Pavement: Top of deck items were not inspected.	
	DECK ITEMS	
TP 350-19	Deck - Wearing Surface: Top of deck items were not inspected.	
TP 350-20	Deck - Curbs: Top of deck items were not inspected.	
TP 350-21	Deck - Sidewalks and Fascias: Sidewalks – The safety walks on both sides are tight mapcracked throughout. At the left, in the 4th railing bay from the end, there is cracking along the outside edge and a 1.5 feet long x 3 inches wide x 1.5 inches deep spall with damp crumbly concrete (Photo 14). At the right, in the 3rd railing bay from the end, there is a 4 square foot area of cracked and spalled concrete (Photo 15).	14,15
	Fascias – At both fascias, the upper (safety walk) portion and the lower (deck) portion of the fascias are tight mapcracked throughout with the most pronounced areas below the railing posts (Photo 16). There are no significant cracks or hollow sounding areas noted.	16
TP 350-22	Deck - Railings: Top of deck items were not inspected.	

ITEM	REMARKS	PHOTO NO.
	SUPERSTRUCTURE ITEMS	
TP 350-27	Structural Deck: Record plans indicate the initial structural deck is 8 inches thick concrete mono-deck. SIP forms were not used. Records indicate the deck was repaired, the surface was scarified and it received a 1.75 inch concrete overlay in 1987. Top of Deck - Top of deck was not inspected. Underdeck – There is widespread hairline cracking of the underside of the deck throughout. There are scattered more pronounced cracks, some with efflorescence. There are delaminated, hollow sounding, and damp areas; and spalls, some with exposed rusted reinforcing bars. The deteriorated areas are illustrated on the Under Deck Deterioration Sketch. The more significant areas are noted below: o Fascia bays on both sides have scattered locations with cracking and staining where the deck reinforcement chairs are located (Photo 17). o Bay 2 at the end right – 8 square foot area of hollow sounding concrete. o Bay 3 at the end – 30 square foot area of cracking, efflorescence, and hollow sounding concrete. o Bay 4 in diaphragm bay 5 – two 3 square foot areas of hollow sounding concrete (Photo 18). o Bay 4 at the end – 75 square foot area of cracking, efflorescence, hollow sounding and delaminated concrete (Photo 19). o Bay 5 at the end – 12 square foot hollow sounding area with surface scaling and light efflorescence (Photo 20).	17 18 19 20
TP 350-28	Primary Members: Good condition; surface rusting where the paint has peeled or blistered. There is no significant section loss noted.	
TP 350-29	Secondary Members: Good condition; surface rusting where the paint has peeled or blistered (Photos 21, 22, & 23). There is no significant section loss noted.	21,22,23
TP 350-30	Paint: The paint system is failed on 15% of the surfaces of the girders and diaphragms. There is cracking and peeling of the paint on the bottom flanges and scattered locations on the girder webs and secondary members (Photo 21). The outside surfaces of the fascia girders are the worst with blistering and peeling paint over 10% of the surfaces of the webs and 30% of the bottom flanges (Photos 22 & 23). The bottom flanges of the interior girders also have 30% blistering and peeling paint (Photo 24). There is surface rusting where the paint has peeled or blistered.	21,22,23 24

ITEM	REMARKS	PHOTO NO.
	UTILITIES ITEMS	
TP 350-43	Lighting: None.	
TP 350-44	Sign Structure: None.	
TP 350-45	Utilities and Support: There are overhead wires attached to the bottom flanges of both fascia girders at the end (Photo 13).	13
	SPECIAL EMPHASIS ITEMS Special Emphasis Inspection Required · Non-Redundant/Fracture Critical Members – No · Pin and Hangers – No · Fatigue-Prone Welds – No · Non-Categorized Fatigue-Prone Details – No · Other – No Special Emphasis Details · No Special emphasis details.	

PLANS & SKETCHES

FED. RD. REG. NO.	STATE	FEDERAL PROJECT NO.	AID NO.	SHEET NO.	TOTAL SHEETS
1	NEW YORK	1-390-3(28) 1-381-2 118		170	305

INTERSTATE ROUTE CONNECTION 570

BUTTERNUT INTERCHANGE - COLLAMER

ONONDAGA COUNTY

Opened 4/22/92 Kim 3/22/94 Douglas 3/14/96 Pete Reichlen 3/29/90

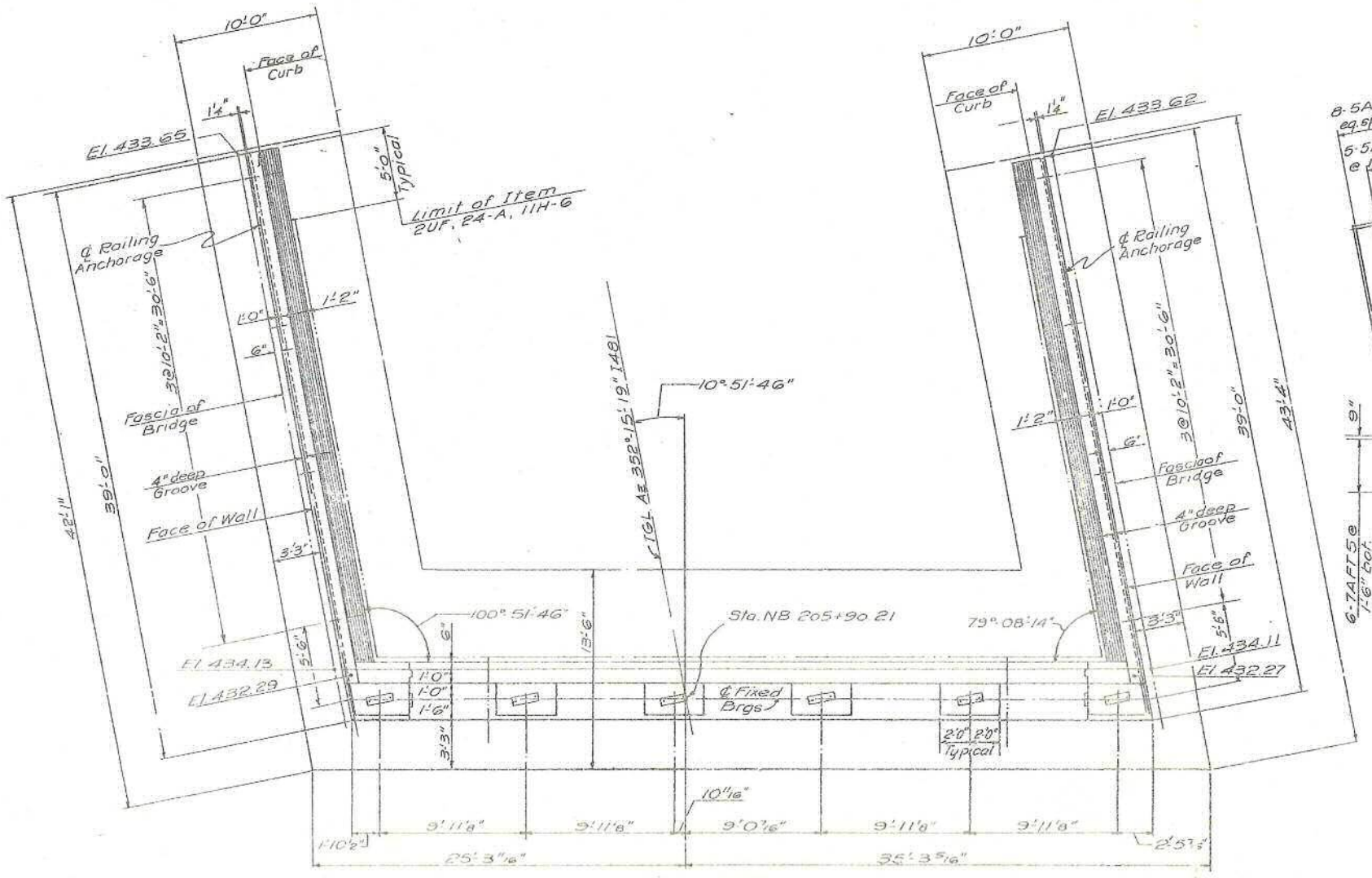

PLAN

Scale 3/16"=1'-0"

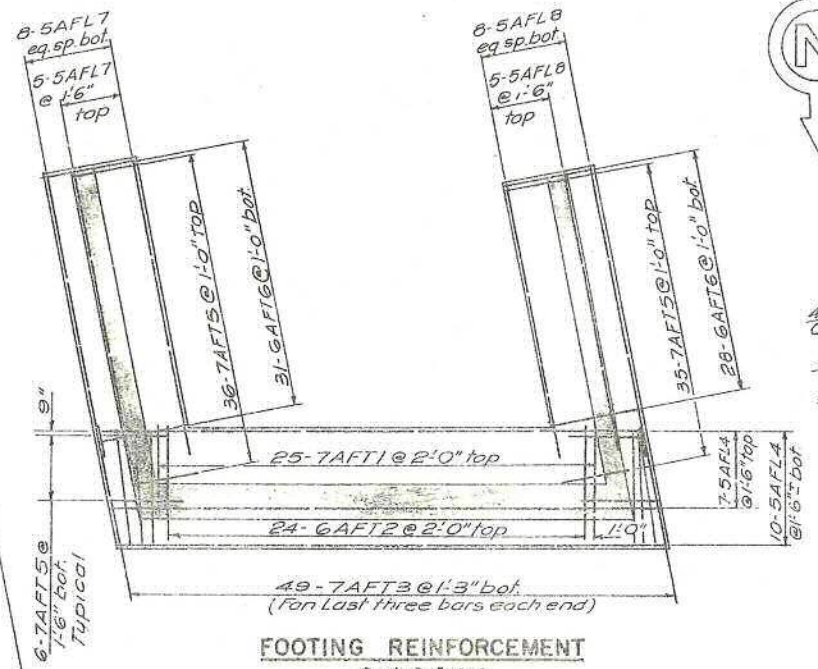

FOOTING REINFORCEMENT

Scale 3/32"=1'-0"



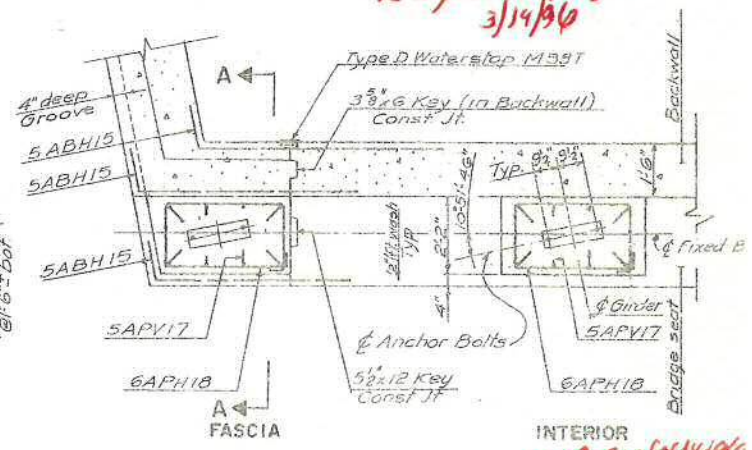

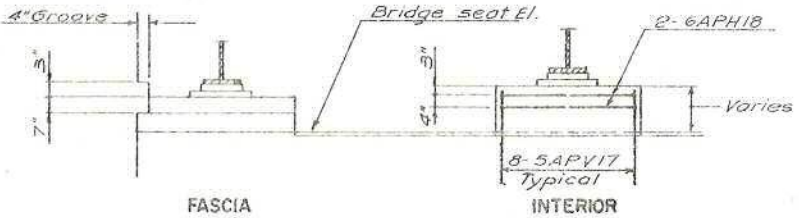

ELEVATION-PEDESTALS

Not to scale

PLAN-PEDESTALS

Scale 3/8"=1'-0"

INTERIOR

✓ R. Cook 4/8/09

✓ R. Cook 4/13/09

Added Sht. of 16 R.C.

✓ BOpalka 4/10/09

✓ BOpalka 4/10/09

✓ R. Cook 05/09

✓ R. Cook 05/09

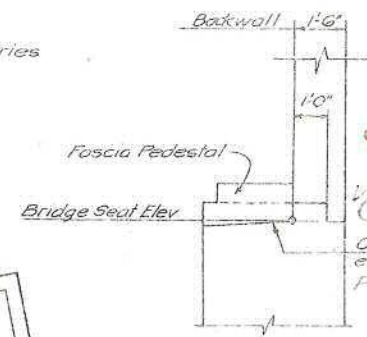

SECTION A-A

Scale 3/8"=1'-0"

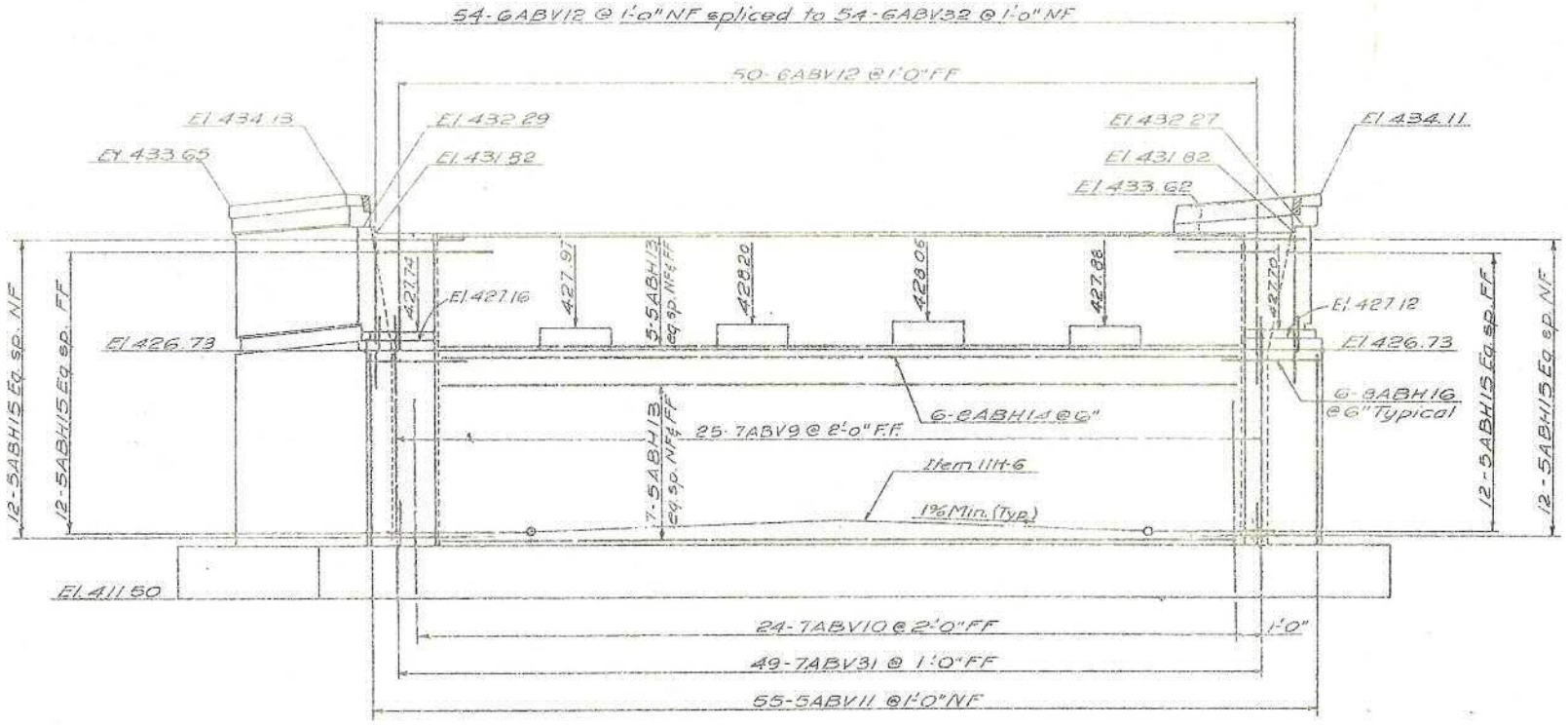

ELEVATION

Scale 3/16"=1'-0"

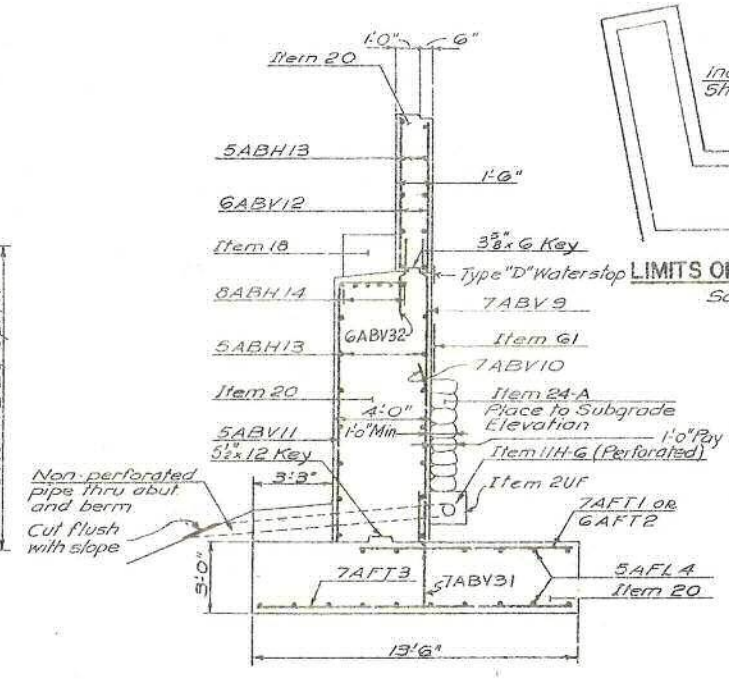

TYPICAL SECTION

Scale 1/4"=1'-0"

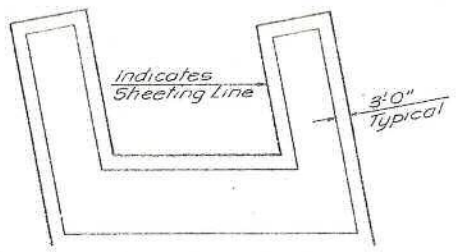

LIMITS OF ITEM 83 TXS

Scale 1"=20'

NOTES:

1. Anchor bolts for bearings shall be 1¼" ø roughened or swedged bolts, 1'-4½" long and set 12" into concrete.
2. For Excavation and Backfill details see Sheet No. 128
3. For Backwall and waterstop details see Sheet No. 125
4. For Fixed Bearing detail see Sht. No. 130
5. For Rail Post spacing see Sheet No. 175

BUTTERNUT INTERCHANGE TO COLLAMER F.A.I. 481

BRIDGE No. 1 - NORTHBOUND ✓ 1481 OVER SH. 555 SOUTH ABUTMENT

DRAWING NO.	SCALE	DATE	SHEET NO.
7504-02	As shown	8/15/10	170

LOCKWOOD, KESSLER & BARTLETT, INC.
CONSULTING ENGINEERS — SYOSSET, NEW YORK

F.A.I. 481

FED. RD. REG. NO.	STATE	FEDERAL PROJECT AID NO.	SHEET NO.	TOT. SHEE
1	NEW YORK	I-690-3(26) I-481-2(16)	171	306

INTERSTATE ROUTE CONNECTION 570

BUTTERNUT INTERCHANGE - COLLAMER

ONONDAGA COUNTY

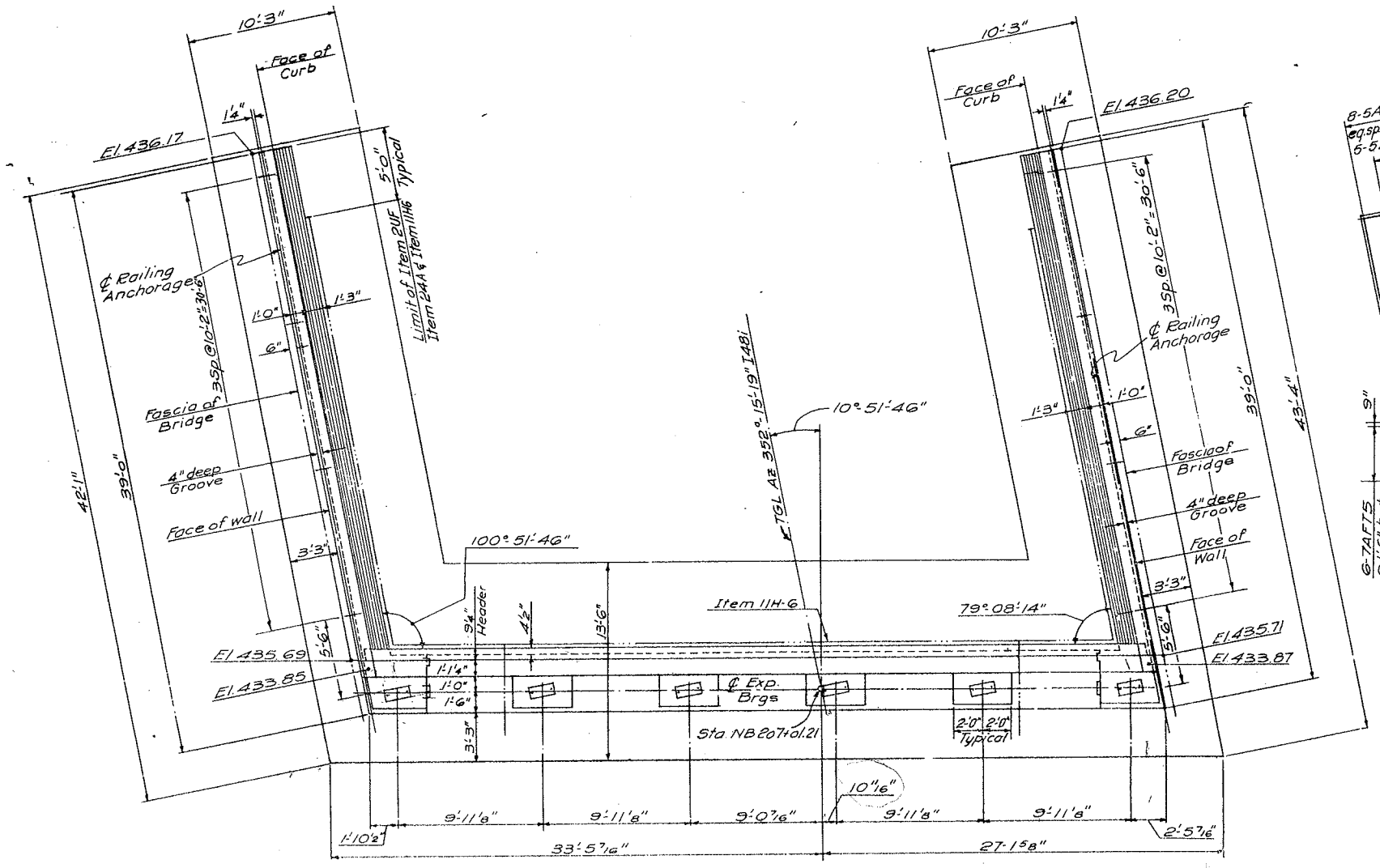

PLAN

Scale 3/16" = 1'-0"

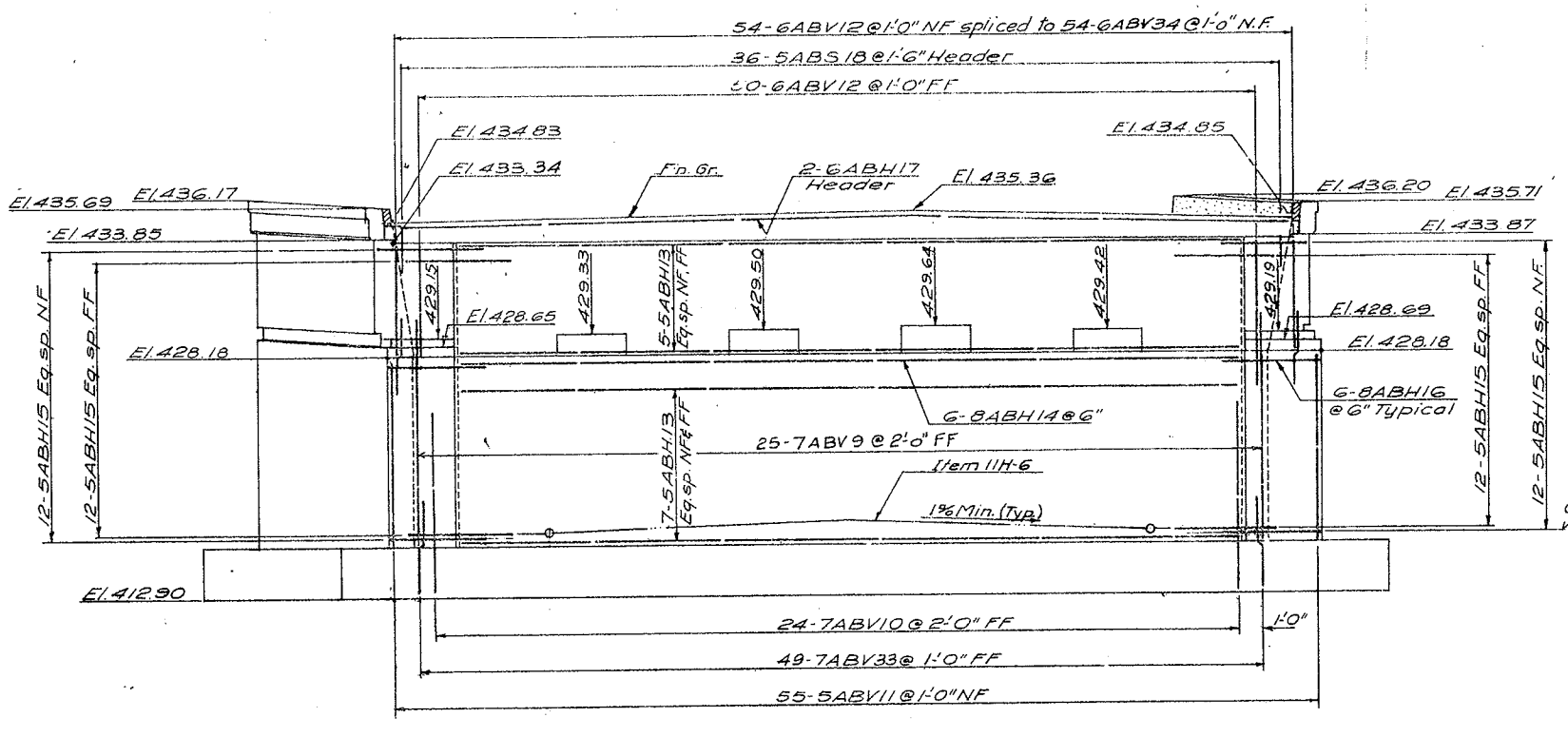

ELEVATION

Scale 3/16" = 1'-0"

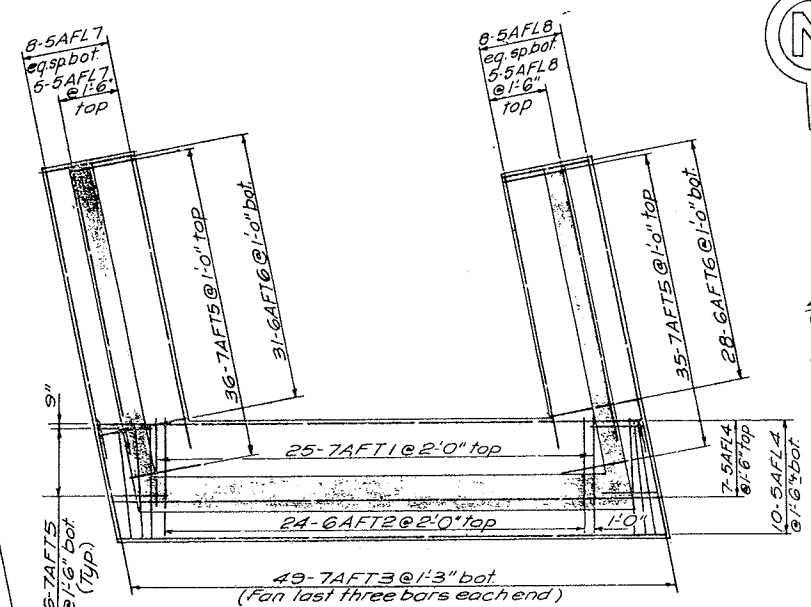

FOOTING REINFORCEMENT

Scale 3/32" = 1'-0"

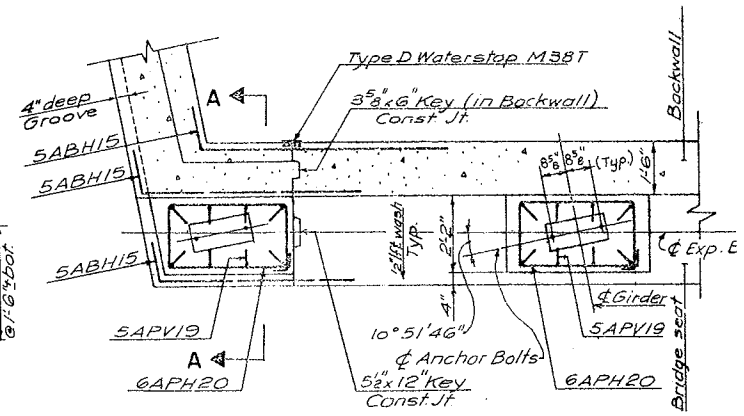

PLAN - PEDESTALS

Scale 3/8" = 1'-0"

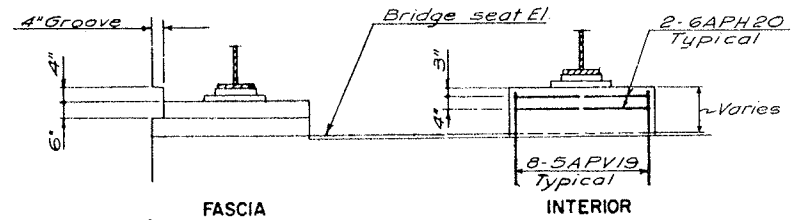

ELEVATION - PEDESTALS

Not to scale

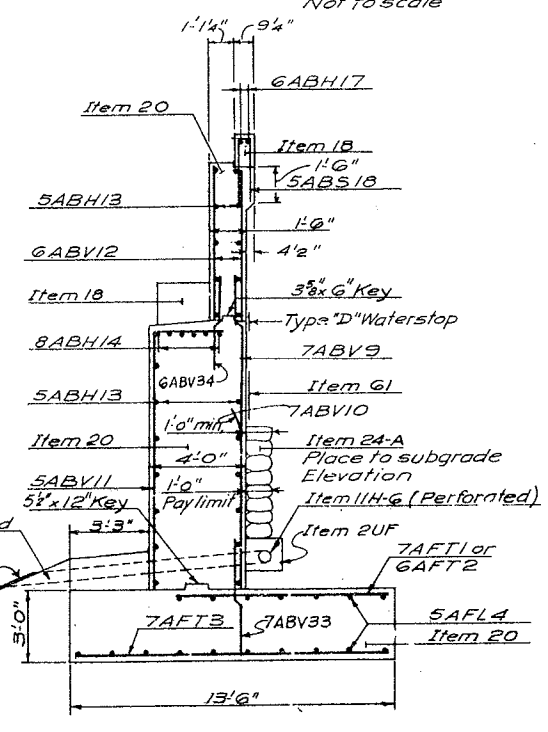

TYPICAL SECTION

Scale 1/4" = 1'-0"

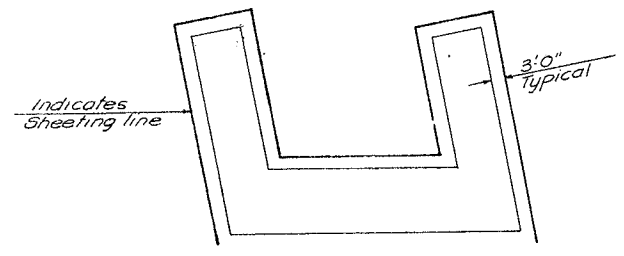

LIMITS OF ITEM 83TXS

Scale 1" = 20'

NOTES :

1. Anchor bolts for bearings shall be 1¼" roughened or swedged bolts, 1'-4'2" long and set 12" into concrete.
2. For Excavation and Backfill details see Sheet No. 128
3. For Backwall and Waterstop details see Sheet No. 125
4. For Expansion Bearing detail see Sht. No. 1
5. For Rail Post spacing see Sheet No. 175
6. For Section A-A - See Sheet No. 170

BUTTERNUT INTERCHANGE TO COLLAMER F.A.I. 481

BRIDGE No. 1 - NORTHBOUND + I 481 OVER S.H. 555 NORTH ABUTMENT

DRAWING NO.	SCALE	DATE	SHEET NO.
7504-02	As shown	8/5/70	171

LOCKWOOD, KESSLER & BARTLETT, INC.
CONSULTING ENGINEERS — SYOSSET, NEW YORK

FED. RD. REG. NO.	STATE	FEDERAL PROJECT AID NO.	SHEET NO.	TOTAL SHEETS
1	NEW YORK	I-390-3(28) I-184-2(14)	175	305

INTERSTATE ROUTE CONNECTION 570

BUTTERNUT INTERCHANGE - COLLAMER

ONONDAGA COUNTY

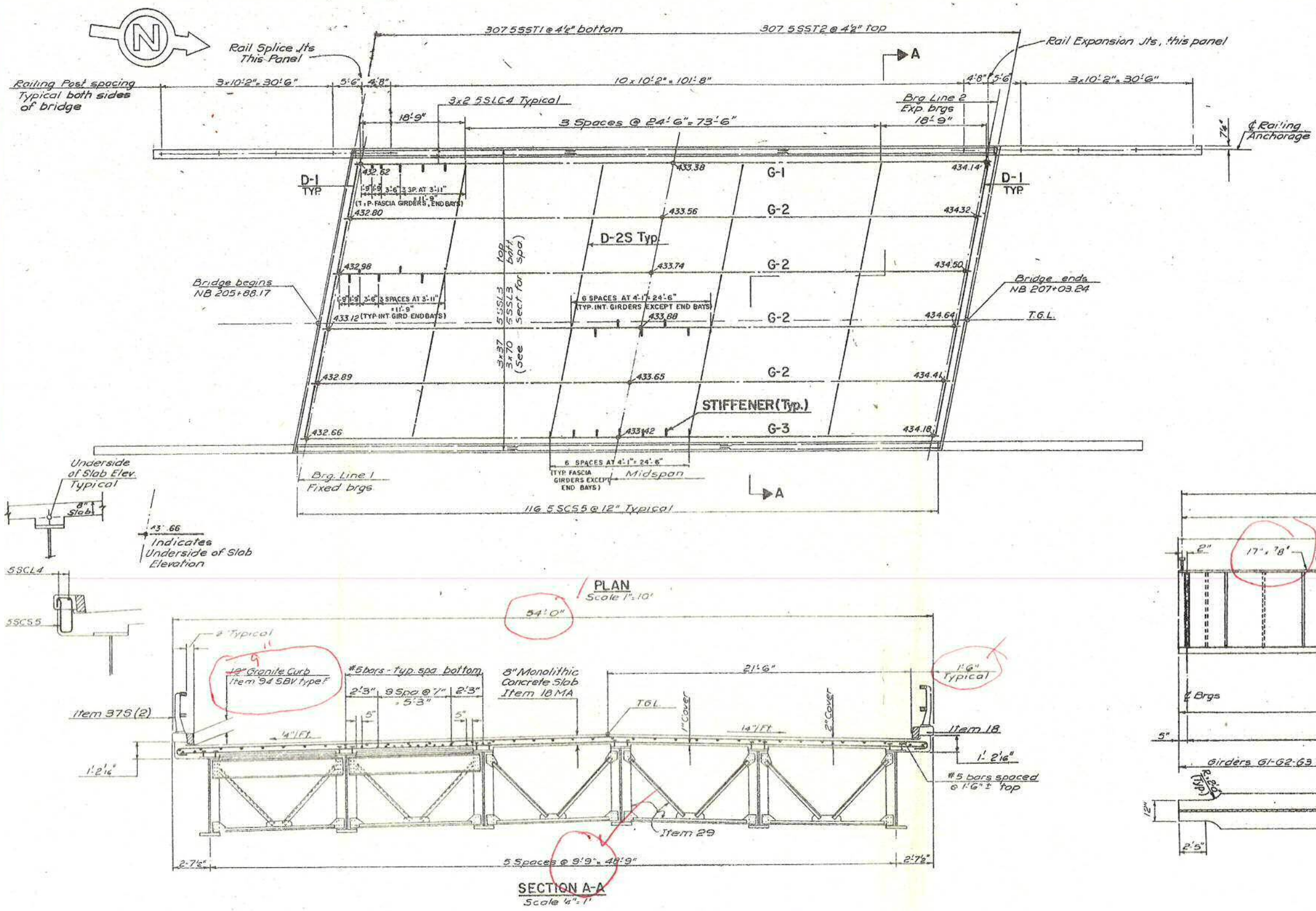

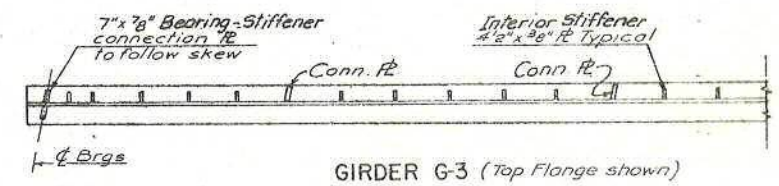

GIRDER G-3 (Top Flange shown)
(G-1 SIMILAR)

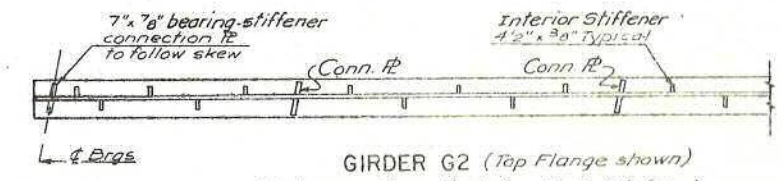

GIRDER G2 (Top Flange shown)

Diaphragm Conn. Pl. to be 7"x 7/16" Pl (Typ.)

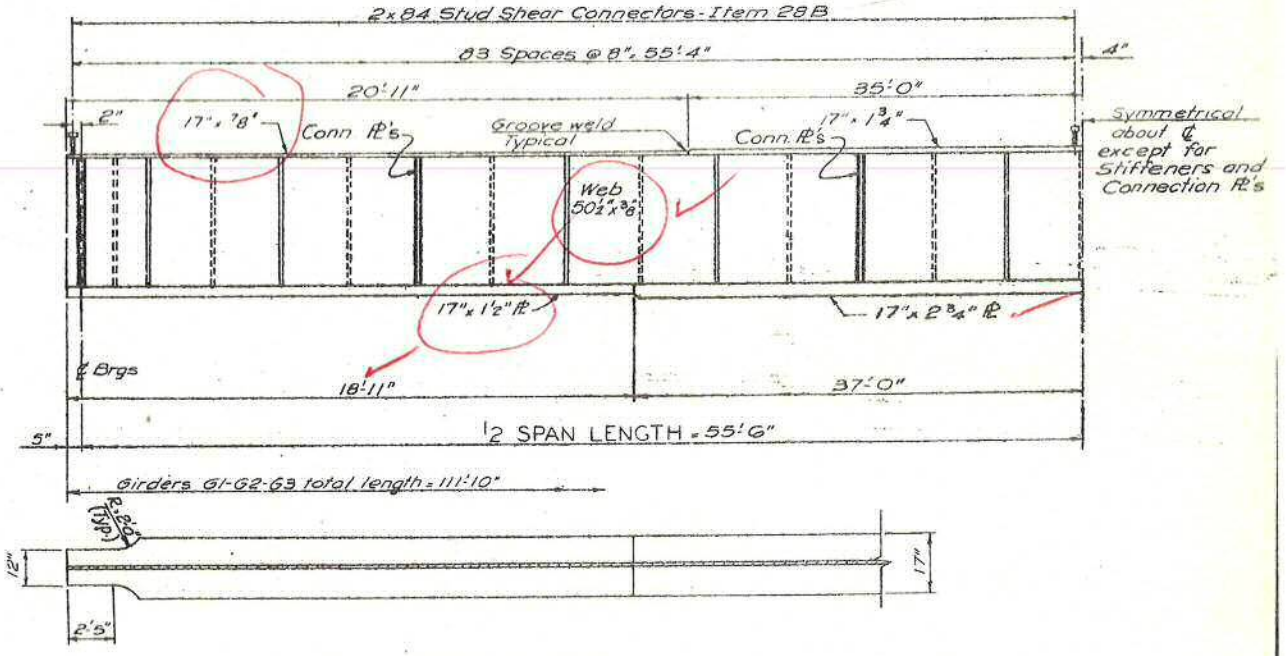

PLAN - BOTTOM FLANGE

No Scale

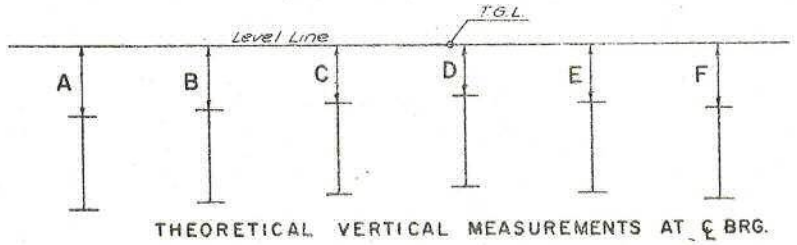

THEORETICAL VERTICAL MEASUREMENTS AT ¢ BRG.

BRG. LINE	VERTICAL MEASUREMENTS TO TOP OF STEEL					
	A	B	C	D	E	F
1	1'-5¼"	1'-3⅜"	1'-1"	11 5/16"	1'-2 1/16"	1'-4 13/16"
2	1'-5¼"	1'-3⅜"	1'-1"	11 5/16"	1'-2 1/16"	1'-4 13/16"

ADJUSTMENT FOR CAMBER		
	FASCIA GIRDER	INTERIOR GIRDER
SLAB CONCRETE	1 13/16"	2 3/8"
V.C.	0"	0"
SUPERIMPOSD DEAD LOAD	7/16"	3/8"
D.L. STEEL ERECTED	1/16"	1/16"
TOTAL	2 13/16"	3 7/16"

Notes

1. For detail of diaphragms see sheet 129
2. For weld sizes see sheet 129

BUTTERNUT INTERCHANGE TO COLLAMER F.A.I. 481

BRIDGE No. 1 - NORTHBOUND
I 481 OVER S.H. 555
N.B. SUPERSTRUCTURE

DRAWING NO.	SCALE	DATE	SHEET NO.
7504-02	As shown	8/15/70	175

LOCKWOOD, KESSLER & BARTLETT, INC.
CONSULTING ENGINEERS – SYOSSET, NEW YORK

BIN 1093562

D251436

RTE. REG. NO.	STATE	FEDERAL AID PROJECT NO.	SHEET NO.	TOTAL SHEETS
1	N.Y.	1R-431-(179) BH1-481-(17)	35	66

INTERSTATE ROUTE CONNECTION 570
BUTTERNUT INTERCHANGE - PHASE 2
BUTTERNUT INTERCHANGE TO COLLAMER,
SH 70-7 ONONDAGA COUNTY

R. Eagle (TC) 4/9/98
R. Eagle (TC) 3-27-00
B Speeley 4/5/02
Prepared 4/12/04
Kathy Cook 05/09/06
Mary Cook 05/09/08 - Douglas R Fellows 3/14/96

Kathy 3/28/94

Peter Hellman 3/29/90

PROPOSED JOINTS

(Typical Both Bridges)
South Abutment - Armoring Angle at End of Deck - Item 564.510001, SEE DWG JD-1

North Abutment - Type A5 Armored Joint with Compression Seal - SEE DWG JD-2
Item 567.35 with Armoring Angle at End of Header - Item 564.510001. SEE DWG JD-1

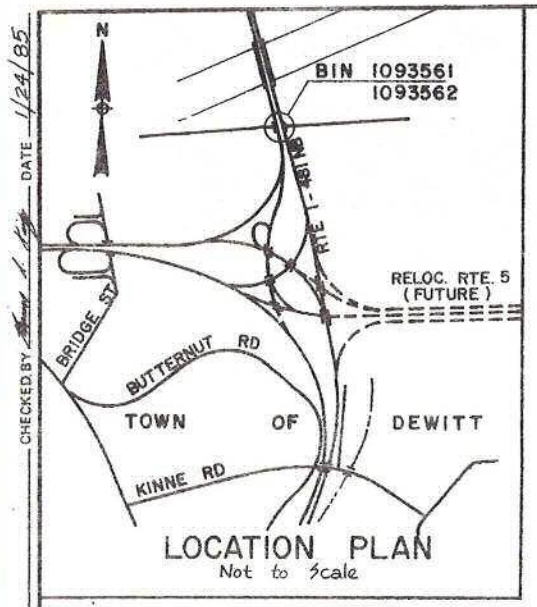

LOCATION PLAN
Not to Scale

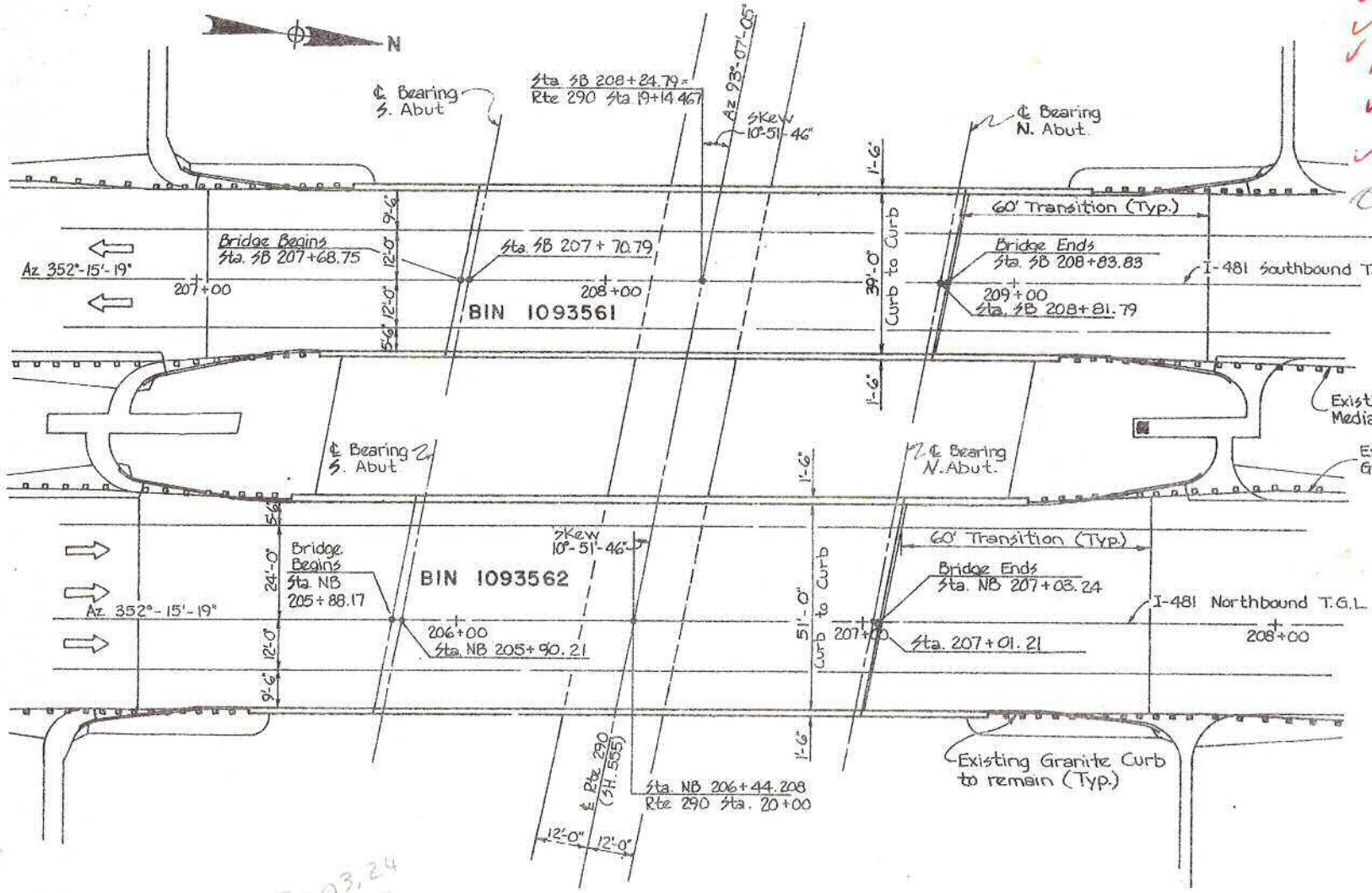

PLAN
Scale : 1" = 20'

207+03.24
-205+88.17
1+15.07

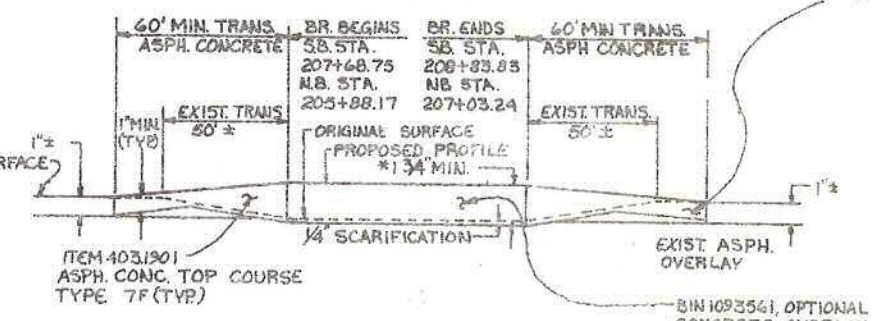

* See note #5, Dwg SN-1

PROPOSED PROFILE
NOT TO SCALE

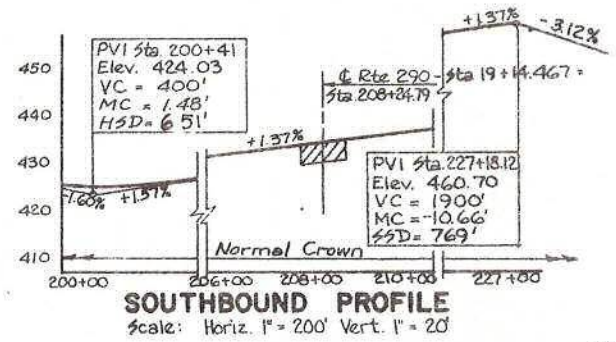

SOUTHBOUND PROFILE
Scale: Horiz. 1" = 200' Vert. 1" = 20'

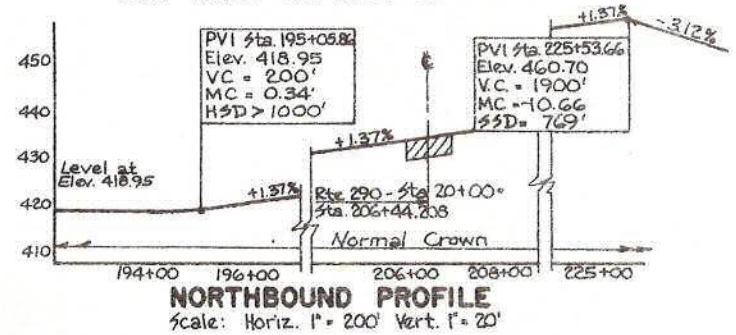

NORTHBOUND PROFILE
Scale: Horiz. 1" = 200' Vert. 1" = 20'

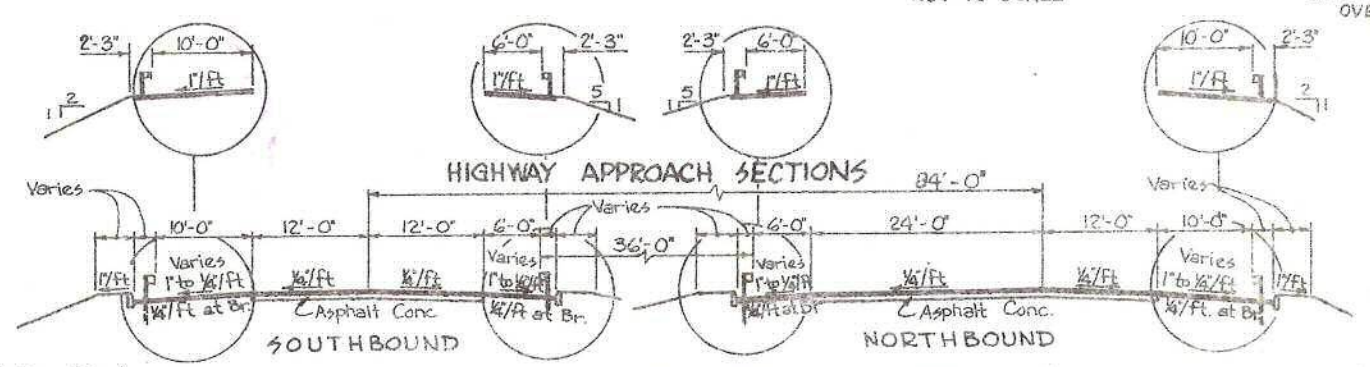

TYPICAL APPROACH SECTION
Scale: 1" = 10'

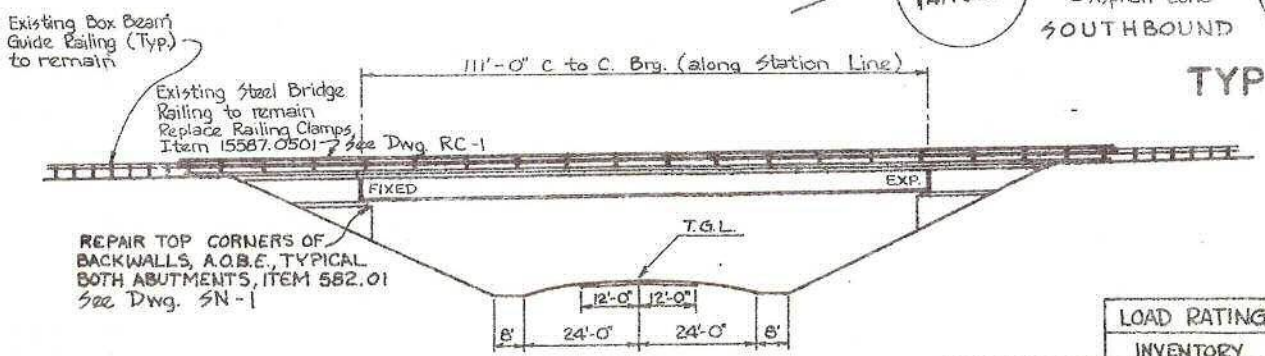

ELEVATION
Scale: 1" = 20'

	LOAD RATING	H-S LOADING
	INVENTORY	OPERATING
BIN 1093561	HS 20.7 (37.29T) W.S.*	H-S 33.4 (70.93T) W.S.*
BIN 1093562	HS 20.0 (35.91T) W.S.*	H-S 32.0 (68.32T) W.S.*

* W.S. = Working Stress

AS - BUILT REVISIONS

SIGNATURE DATE

BIN 1093561 AND 1093562
I - 481 SB AND NB OVER RTE. 290

STATE OF NEW YORK
DEPARTMENT OF TRANSPORTATION

DRAWING No.	SCALE	DATE	REGION	SHEET NO.
BR-6	As shown		3	35

DRAFTED BY _____ CHECKED BY _____ DATE 1/24/85
CHECKED BY _____ DESIGNED BY _____ CHECKED BY _____ ESTIMATED BY _____
IN CHARGE OF _____

BIN: 1093562
I481 NB / RT 290

BEGIN ABUTMENT DETERIORATION SKETCH

NOT TO SCALE

DATE: 01/15/2014

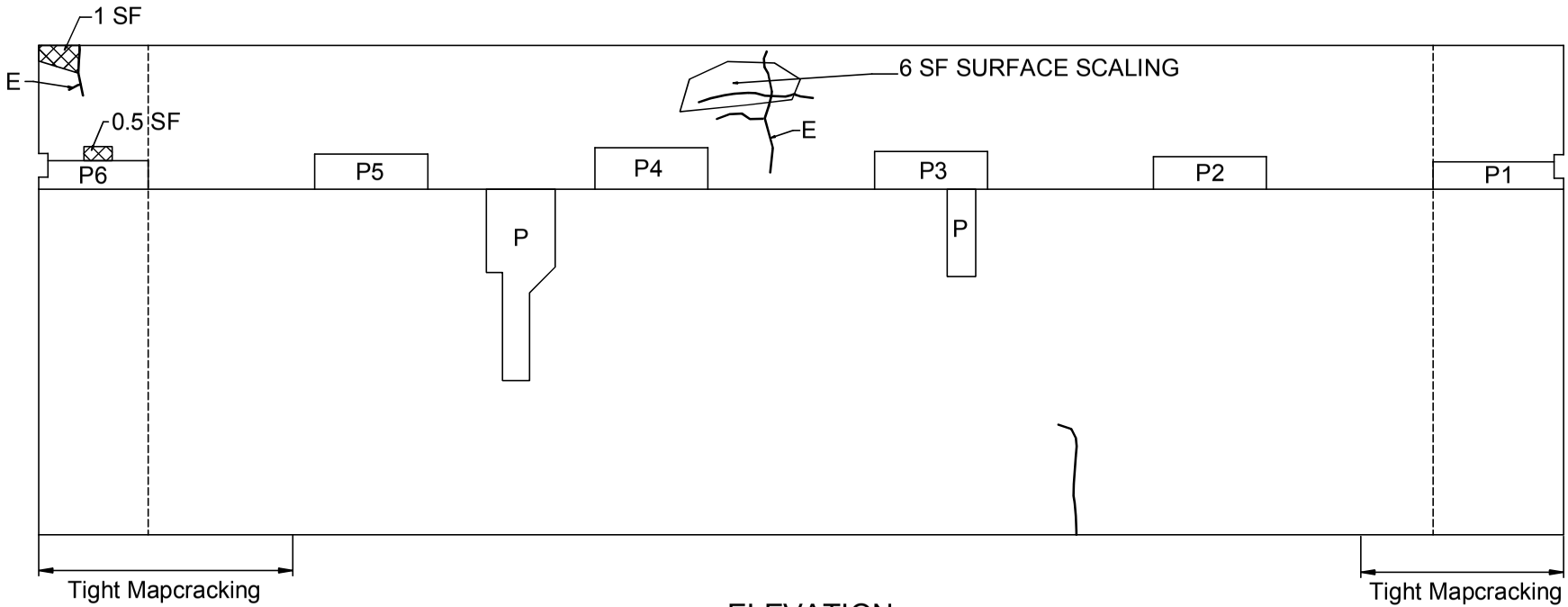

ELEVATION

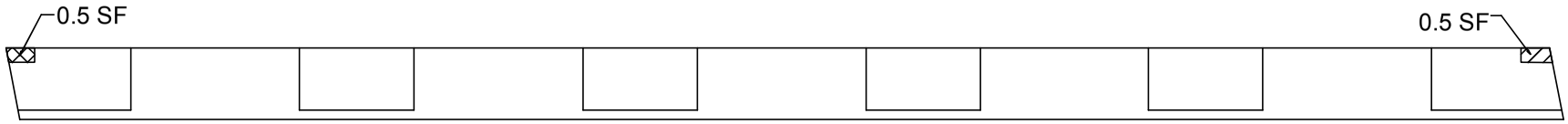

PLAN

LEGEND					
	Hollow Concrete	P	Patch		Spall
E	Efflorescence		Crack		

BIN: 1093562
I481 NB / RT 290

END ABUTMENT DETERIORATION SKETCH

NOT TO SCALE

DATE: 01/15/2014

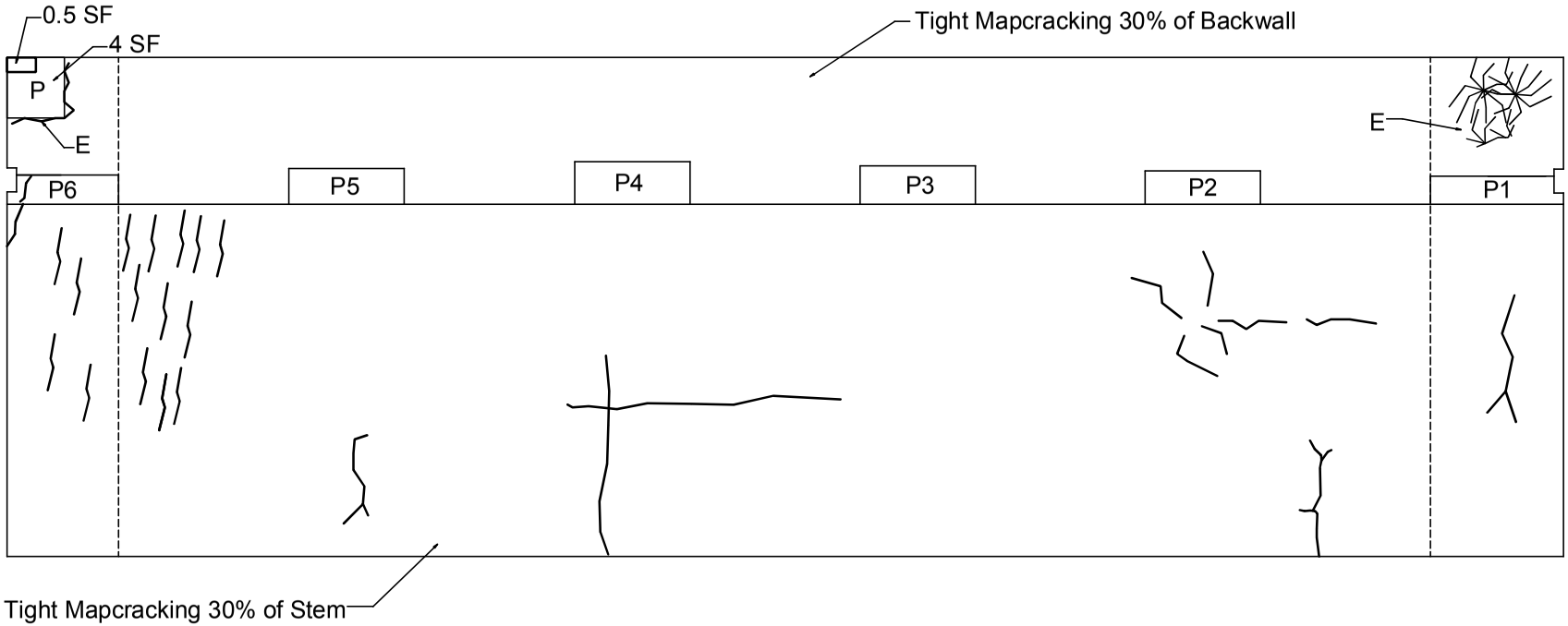

ELEVATION

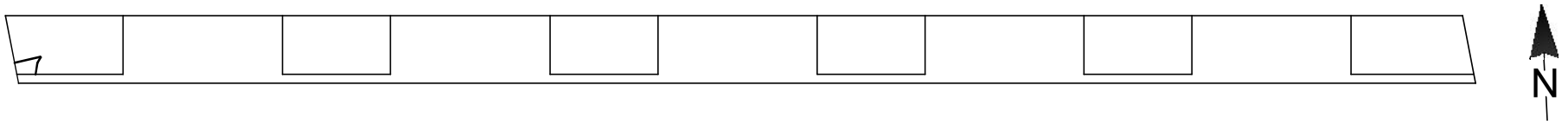

PLAN

LEGEND

E	Efflorescence	P	Patch		Spall
	Mapcracking		Crack		

BIN: 1093562
I481 NB / RT 290

UNDERSIDE OF DECK DETERIORATION SKETCH

NOT TO SCALE

DATE: 01/15/2014

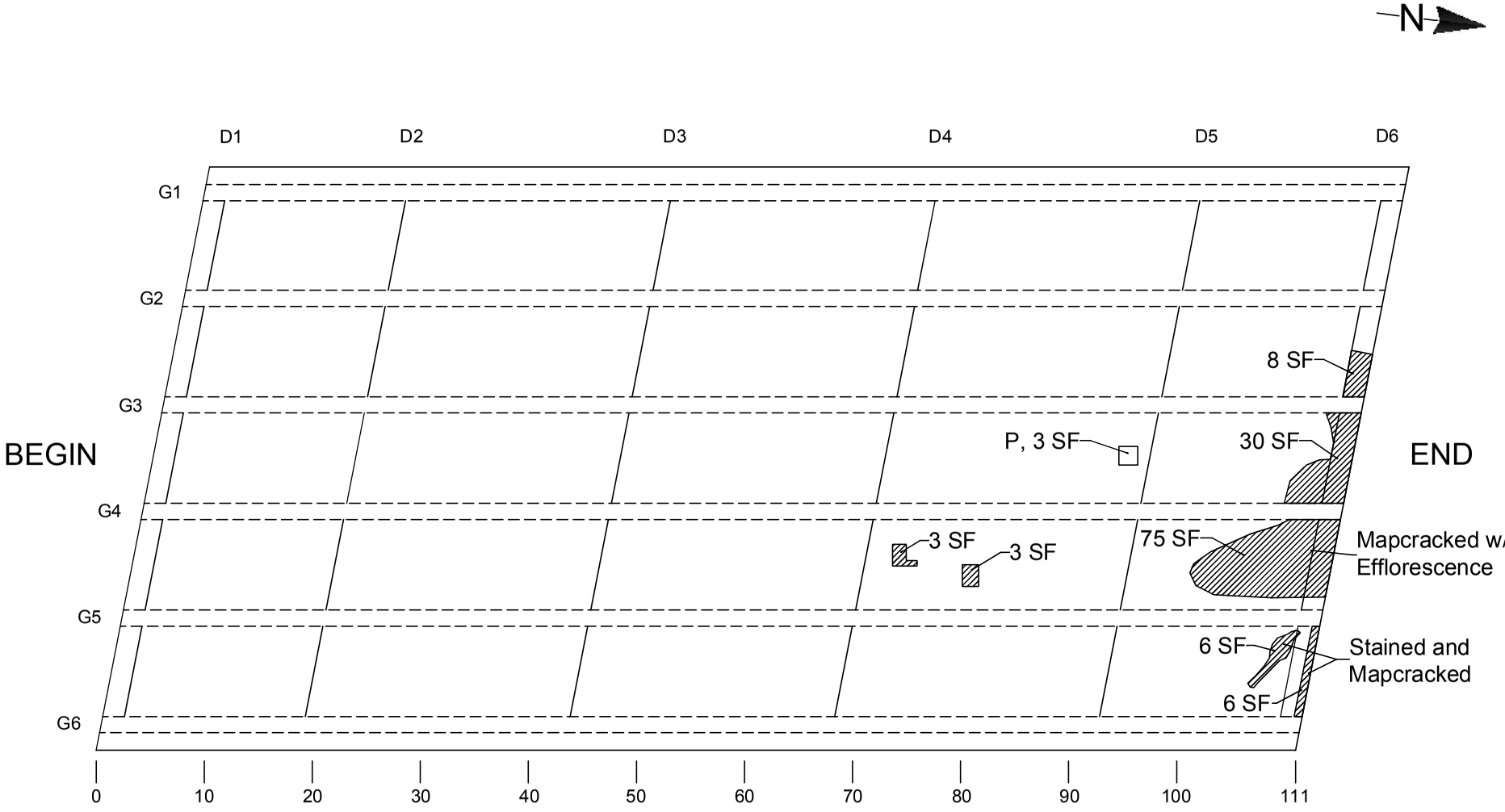

TOTAL DAMAGED AREA EQUALS 131 SF WHICH IS 2.2% OF DECK SURFACE

LEGEND	
P	Patch
	Hollow Concrete

IN-DEPTH PHOTO DOCUMENTATION

BIN: 1093562
I481 NB / RT 290

IN DEPTH INSPECTION
PHOTO LOCATION PLAN

DATE: 01/15/2014

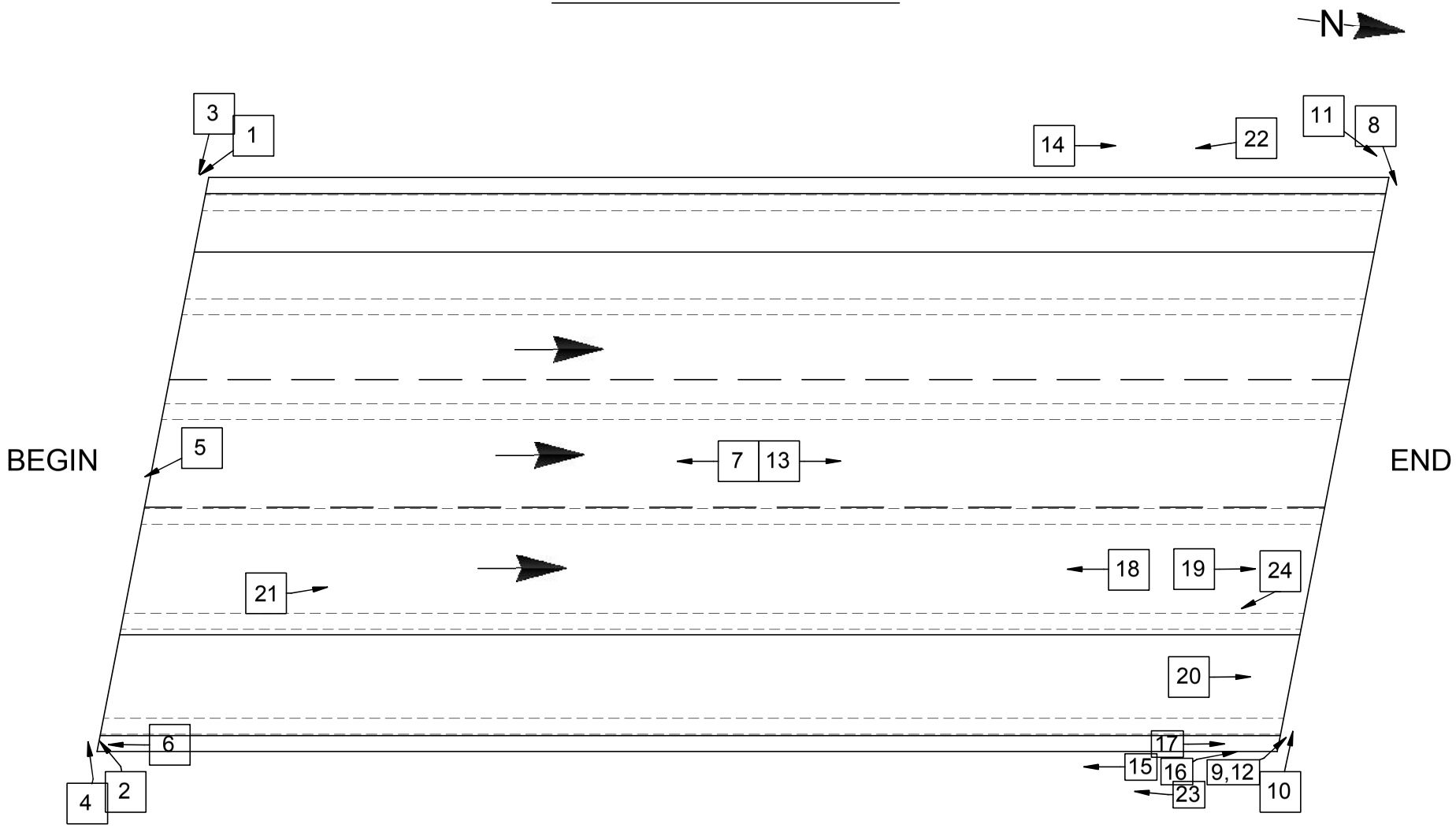



DESCRIPTION: BEGIN ABUTMENT BEARING AT G1 – LEFT SIDE

PHOTO 1



DESCRIPTION: BEGIN ABUTMENT BEARING AT G6 – RIGHT SIDE

PHOTO 2



DESCRIPTION: BEGIN ABUTMENT PEDESTAL P1– AT LEFT SIDE

PHOTO 3



DESCRIPTION: BEGIN ABUTMENT BACKWALL AT PEDESTAL P6– RIGHT REAR

PHOTO 4



DESCRIPTION: BEGIN ABUTMENT BACKWALL AT BAY 3– LOOKING FROM LEFT TO RIGHT

PHOTO 5



DESCRIPTION: BEGIN ABUTMENT BACKWALL– RIGHT SIDE

PHOTO 6



DESCRIPTION: BEGIN ABUTMENT STEM

PHOTO 7



DESCRIPTION: END ABUTMENT PEDESTAL AT P1– LEFT SIDE

PHOTO 8



DESCRIPTION: END ABUTMENT BEARING AT G6– RIGHT SIDE

PHOTO 9



DESCRIPTION: END ABUTMENT BEARING AT G6– RIGHT SIDE

PHOTO 10



DESCRIPTION: END ABUTMENT BACKWALL– LEFT SIDE

PHOTO 11



DESCRIPTION: END ABUTMENT BACKWALL– RIGHT SIDE

PHOTO 12



DESCRIPTION: END ABUTMENT STEM

PHOTO 13



DESCRIPTION: SAFETY WALK LEFT END– LOOKING FROM BEGIN TO END

PHOTO 14



DESCRIPTION: END RIGHT SAFETY WALK– LOOKING FROM END TO BEGIN

PHOTO 15



DESCRIPTION: FASCIA AT END RIGHT– LOOKING FROM BEGIN TO END

PHOTO 16



DESCRIPTION: DECK RIGHT FASCIA BAY– LOOKING FROM BEGIN TO END

PHOTO 17



DESCRIPTION: DECK BAY 4 BETWEEN DIAPHRAGM 4 AND DIAPHRAGM 5– LOOKING FROM END TO BEGIN

PHOTO 18



DESCRIPTION: DECK BAY 4 AT END– LOOKING FROM BEGIN TO END

PHOTO 19



DESCRIPTION: DECK BAY 5 AT END– LOOKING FROM BEGIN TO END

PHOTO 20



DESCRIPTION: FRAMING– LOOKING FROM BEGIN TO END

PHOTO 21



DESCRIPTION: GIRDER G1 AT END– LOOKING FROM END TO BEGIN

PHOTO 22



DESCRIPTION: GIRDER G6 RIGHT– LOOKING FROM END TO BEGIN

PHOTO 23



DESCRIPTION: GIRDER G5 LEFT– LOOKING FROM END TO BEGIN

PHOTO 24

ASBESTOS SAMPLING SURVEY

Asbestos Sampling Survey

Location:

BIN 1-09356-2
Interstate Route 481 North Bound over Route 290

Prepared for:

New York State
Department of Transportation

PIN 3804.09.101

LaBella Project No. 97132

May, 1999

Table of Contents

Page

I. Project Summary 1

II. Site Description 1

III. Inspection Procedures 1

IV. Results 2

Certification 2

Figures and Table

I. Project Summary

In accordance with conditions of Term Agreement D010010, LaBella Associates, P.C. conducted an asbestos sampling survey of the Interstate Route 481 North Bound bridge over Route 290. Based on laboratory analyses of bulk samples collected, the following material was determined to contain asbestos:

BIN 1-09356-2 Interstate Route 481 North Bound over Route 290

Type of Material	Estimated Amount
Sheet Packing	10.4 Square Meters

II. Site Description

The Site is located in Onondaga County, New York. For the purpose of this report, the Site consists of the Interstate Route 481 North Bound bridge over Route 290 (See attached FIGURE 1 - Site Location Map).

III. Inspection Procedures

The following procedures were used to obtain the data for this Report:

A. A review of record drawings supplied by Region 3 personnel and a visual inspection of the subject structure were conducted to identify potential visible/accessible sources of asbestos-containing materials. Observations and notes were made to provide a description of the structure, and an estimate of the approximate amount, length, or area of ACM present.

B. Physical or operational constraints which might affect the removal of the ACM were identified and reported.

C. Bulk samples of suspected ACM were collected during the site inspection of the subject structure. Samples were taken from each homogeneous area that may contain ACM.

D. Samples were submitted for analysis. Preliminary PLM analyses of NOB materials were performed by LaBella Laboratories, a NYSDOH approved laboratory, to determine the presence and percentage of asbestos in each sample. TEM analyses of NOB materials, if necessary, were performed by New York Testing Laboratories, Inc.

E. Lab results were used to determine the approximate location, type, and amount of the verified ACM.

F. A drawing of the structure at the Site was created, in order to show sample locations and the approximate locations and amounts of confirmed ACM observed in accessible locations.

Only accessible areas were inspected. Inaccessible areas, such as areas within the bridge or the approaches to the bridge were not included in this inspection. No investigation was conducted by LaBella Associates to determine the presence of underground utilities on or in the immediate vicinity of the Site. Actual sample locations are shown in the attached FIGURE 2. Results of bulk sample analyses are tabulated in the attached TABLE.

IV. Results

BIN 1-09356-2 Interstate Route 481 North Bound over Route 290

Sheet Packing

Asbestos-containing sheet packing is located between the tops of the abutments and the deck slab at both ends of the bridge. Most of this material is presently covered by the bridge deck, although the edges of this sheet packing are exposed and visible at various locations.

It is estimated that the total amount of this asbestos-containing sheet packing material on the bridge is approximately 10.4 square meters. This estimate is based on field measurements taken at the time of the site visit.

The approximate locations of this asbestos-containing sheet packing are shown in FIGURE 2.

Certification

LaBella Associates, P.C. certifies the accuracy of this report, to the best of our knowledge, based on the information collected as described in the Inspection Procedures Section of this investigation.

Figures & Table

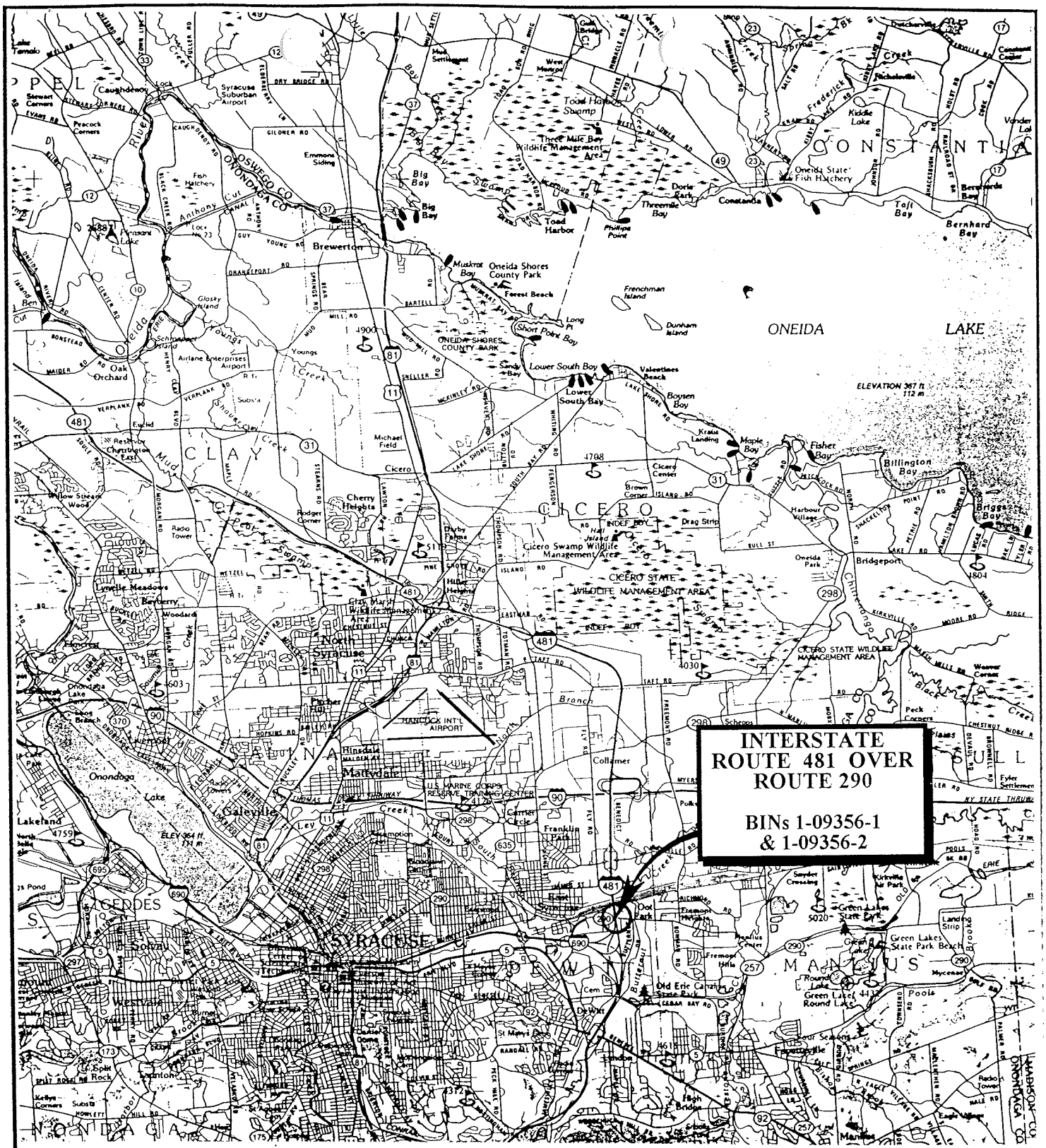

N

SCALE: 1" = 2000'

FIGURE 1
Site Location Map

Interstate Route 481
over Route 290
East Syracuse, New York

LABELLA

PROJECT NO. 97132

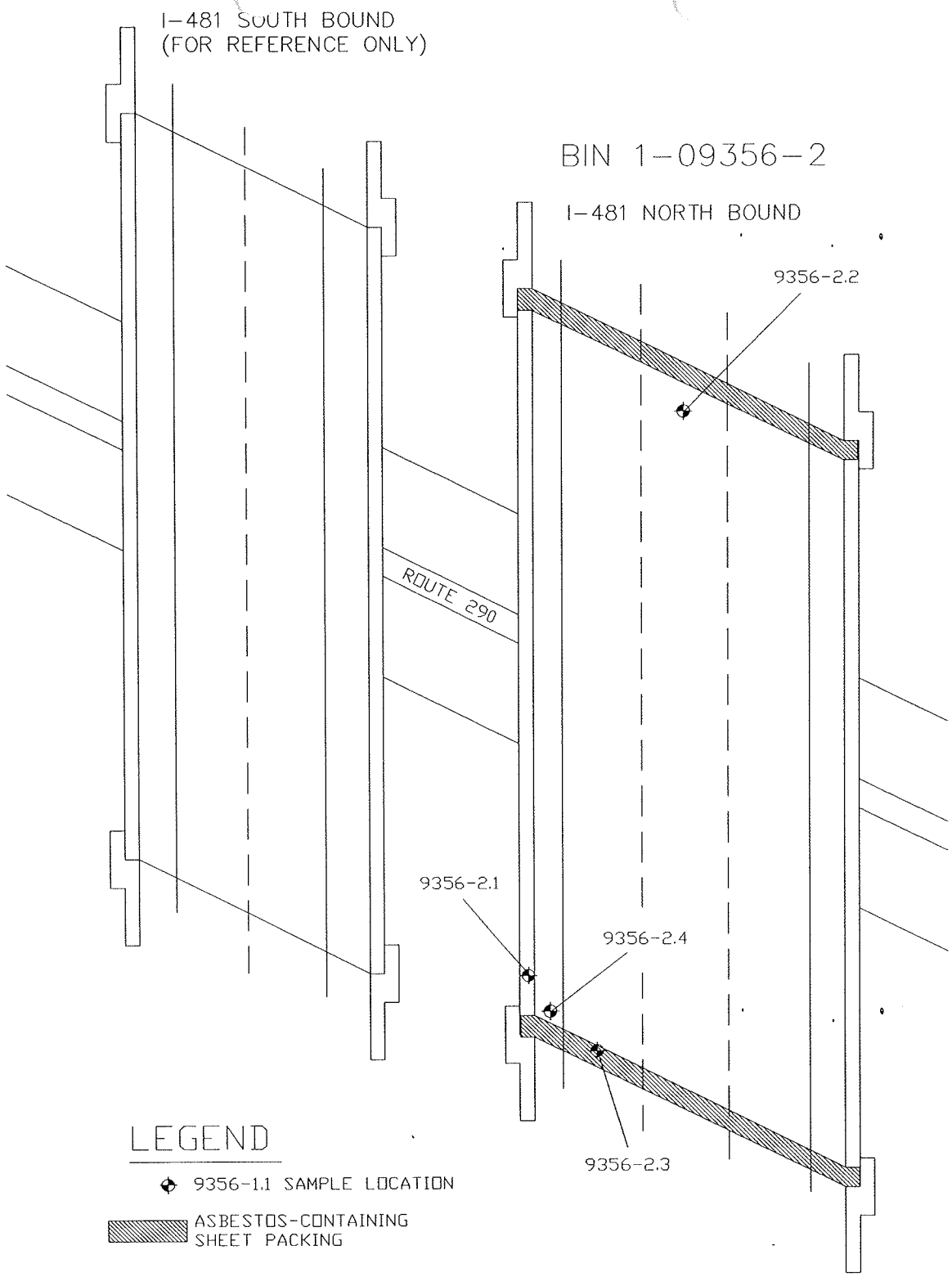

NORTH	PROJECT TITLE: ASBESTOS SAMPLING SURVEY 7 BRIDGES, ONONDAGA & OSWEGO COUNTIES, NEW YORK	PROJECT NO. 97132 PIN 3804.09.101
	FIGURE 2 : I-481 NORTH BOUND OVER ROUTE 290 BIN 1-09356-2 SAMPLE LOCATIONS AND CONFIRMED ACM	NOT TO SCALE DATE: MAY, 1999

Bulk Sample Results Table

Asbestos Sampling Survey
BIN 1-09356-2
Interstate Route 481 North Bound over Route 290
Onondaga County, New York
LaBella Project # 97132
PIN 3804.09.101

Sample #	Sample Location	Type of Material	Results % Asbestos	Amount of Material	Specification Item No.
9356-2.1	South End of Bridge, on Outside I-Beam	Green Paint	None Detected	N/A	N/A
9356-2.2	North End of Bridge, on Inside I-Beam	Green Paint	None Detected	N/A	N/A
9356-2.3	**West End of Bridge Between Deck & Abutment**	**Sheet Packing**	**37% Chrysotile**	**10.4 Square Meters**	**15202.0627 (M)**
9356-2.4	West End of Bridge on Back Wall	Gray Masonry Coating	None Detected	N/A	N/A

ATHENICA
ENVIRONMENTAL SERVICES INC.
Tel (718) 784-7490
Fax (718) 784-4085

3

BULK (NOB) ASBESTOS ANALYSIS BY POLARIZED LIGHT MICROSCOPY AND TRANSMISSION ELECTRON MICROSCOPY

CLIENT: NYS DOT, Region 3
LABORATORY ID #: 04-04-108
DATES OF ANALYSIS: 04/29/04

PROJECT: Bin # 1093562
ANALYT. METHODOLOGIES: ELAP 198.1, ELAP 198.4
DATE OF REPORT: 04/30/04

LABORATORY RESULTS

CLIENT #	LAB. ID #	LOCATION	%ORG	%ASI	%AII	PLM RESULTS	TYPE OF ASBEST.	TEM RESULTS	TYPE OF ASBEST.	POSIT. / NEGAT.
01	04-04-108-01	Steel paint coat G-5 flange bottom 1 meter from end bearing	24.98	11.92	63.10	**ND**	NA	**ND**	NA	**Negat.**
02	04-04-108-02	Steel paint coat G-3 web end abutment	30.62	8.44	60.94	**ND**	NA	**ND**	NA	**Negat.**
03	04-04-108-03	Steel paint coat G-2 flange bottom 3 meters from end bearing	46.15	1.28	52.56	**ND**	NA	**ND**	NA	**Negat.**

E. Sioukri

ANALYST
E. Sioukri

LABORATORY DIRECTOR
Spiro Dongaris

LABORATORY CERTIFICATION NUMBERS: NVLAP 101958, ELAP 10955

- Athenica Environmental Services Inc. (AES), is responsible only for information pertaining to samples taken by its employees.
- Samples will be stored for sixty (60) days. AES Inc., should be notified within this time frame for a true duplicate analysis.
- The report relates only to items tested. This report must not be used to claim product endorsement by NVLAP or any other agency of the U.S. Government. Test reports may not be reproduced except in full and with prior approval of AES Inc.
- The liability of Athenica Environmental Services Inc. with respect to the services charged, shall in no event exceed the amount of the invoice.

ATHENICA
ENVIRONMENTAL SERVICES INC.
45-09 GREENPOINT AVENUE
LONG ISLAND CITY, NY 11104
Tel. (718) 784-7490
Fax. (718) 784-4085

PROJECT NO. (ATHENICA FILE#) C003314 DATE 4/16/2004

METHOD OF SHIPMENT U.S. MAIL INSPECTOR K. WAY

NUMBER OF SAMPLES 3 TYPE OF ANALYSIS REQUESTED ☐ PLM ☒ NOB-PLM ☒ NOB-TEM ☐ OTHERS

TURNAROUND TIME ☐ 6 HRS ☐ 12 HRS ☐ 24 HRS ☒ OTHER HRS

COMMENTS ATT: CHRISTOPHER ANDERSON
333 E. WASHINGTON ST. SYRACUSE, N.Y. 13202

HOM. AREA	SAMLPLE #	SAMPLE DESCRIPTION	SAMPLE LOCATION	FIELD COMMENTS	LABORATORY RESULTS		
					PLM	PLM-NOB	TEM-NO
	01	STEEL PAINT COAT	G-5 FLANGE BOTTOM	1METER FROM END BEARING			
	02	"	G-3 WEB	END ABUTMENT.			
	03	"	G-2 FLANGE BOTTOM	3METERS FROM END BEARING			

TRANSMITTAL OF RESULTS :
☒ STANDARD
☐ TELEPHONE RESULTS TO
☐ FAX RESULTS TO

TELEPHONE # : (315) 428-4628
FAX # :

BATCH # : 04-04-108

CHAIN OF CUSTODY RECORD

RELINQUISHED BY :	Kent Way	DATE :	4/16/2004	TIME :	15:30
RECEIVED BY :	Reynaldo G	DATE :	4/22/2004	TIME :	
ANALYST :	EJ	DATE :	4/29/2004	TIME :	

LABORATORY ACCREDITATION :
NVLAP# 101958 ELAP# 10955

LATEST BIENNIAL INSPECTION REPORT

Inspection Date: 4/17/2012 RC: 33 BIN: 1093562

Bridge Ratings

Carried: 481I 481I33012067 Crossed: 290 290 33012023 CheckValue: 1,793,283,765

Inspection Agency: 10 - NYSDOT Type of Inspection: 1 - BIENNIAL
GTMS: 302 -- Steel - Stringer/Multi-Beam or Girder
POSTINGS: See Gen Rec Page 1 for Postings at time of inspection.
Further Investigation Needed: No
State Highway Number: 70-7 Milepoint: 7.49 AADT/Yr: 9755 / 2002
Orientation: 8 - Northwest Political Unit: 0233 - Town of DEWITT Year Built: 1972
Total Spans: 1 Ramp Bridge Attached To Span: NA BIN: NA
General Recommendation: 5 Computed Condition Rating: 5.031

Abutment Ratings:	Beg Abut	End Abut
Joint with Deck	8	5
Bearings, Bolts, Pads	5	5
Seats and Pedestals	5	5
Backwall	5	5
Stem (Breastwall)	5	5
Erosion or Scour	6	6
Footings	9	9
Piles	8	8
Recommendation	5	5

Wingwall Ratings:	Beg Abut	End Abut
Walls	5	5
Footings	9	9
Erosion or Scour	6	6
Piles	8	8

Channel Ratings:	Channel
Stream Alignment	8
Erosion and Scour	8
Waterway Opening	8
Bank Protection	8

Approach Ratings:	Approaches
Drainage	4
Embankment	6
Settlement	5
Erosion	5
Pavement	5
Guide Railing	4

Number of Flags Issued:

RED: 0 Yellow: 0 Safety: 1

Vulnerability Reviews Recommended: 1=Yes, 2=No, 3=NA, X=NotActive

Hydraulic: 3	Overload: X	Steel: 2
Collision: 2	Concrete: X	Seismic: X

Inspector's Signature: CheckValue: 1,793,283,765 Date: 4/17/2012

Peter Riehlman,PE () (Inspector ID:3000052)

Signed copy of this inspection report is available in the appropriate NYSDOT Regional Office

Reviewed By: Date: 11/29/2012

James R. Manning,PE () (QC ID:3000023)

Signed copy of this inspection report is available in the appropriate NYSDOT Regional Office

Inspection Date: 4/17/2012 RC: 33 BIN: 1093562

Span Ratings

Carried: 481I 481I33012067 Crossed: 290 290 33012023 CheckValue: 1,793,283,765

Deck Element Ratings:	**001**
Wearing Surface	4
Curbs	4
Sidewalks, Fascias	5
Railings, Parapets	6
Scuppers	8
Gratings	8
Median	8
Mono Deck Surface	4

Superstructure Ratings:	**001**
Structural Deck	4
Primary Members	6
Secondary Members	6
Paint	4
Joints	8
Recommendation	4

Pier Ratings:	**001**
Bearings, Bolts, Pads	8
Pedestals	8
Top of Cap or Beam	8
Stem Solid Pier	8
Cap Beam	8
Pier Columns	8
Footings	8
Erosion or Scour	8
Piles	8
Recommendation	8

Utility Ratings:	**001**
Lighting	8
Sign Structure	8
Utilities and Support	5

Field Notes:

Field Date	Arrival	Departure	Temp (C)	Temp (F)	Weather Conditions
4/10/2012	3:00:00 PM	5:15:00 PM		45	cldy.
4/17/2012	1:00:00 PM	3:00:00 PM		55	cldy.

Inspection Date: 4/17/2012 RC: 33 BIN: 1093562

Inspection Notes

Carried: 481I 481I33012067 Crossed: 290 290 33012023 CheckValue: 1,793,283,765

Note ID: 331210935620009

Beg Abut -- Abutment: Seats and Pedestals -- Rated 5, Was 4
Referenced Photos: "5"
2012-Cleaned since this last inspection

Note ID: 33121093562000B

Approaches: Drainage -- Rated 4, Was 6
Referenced Photos: "13"
2012-Right approach and bridfge curb has sand debris buildup preventing proper drainage off bridge deck.

Note ID: 331210935620003

Approaches: Guide Railing -- Rated 4, Was 6
Referenced Photos: "12"
2012- Beg. approach rail on right has impact damage. with bent posts and rail.

Note ID: 33121093562000A

Span 001 -- Deck Elements: Wearing Surface -- Rated 4, Was 5
Referenced Photos: "11", "14"
2012-spall and loose concrete at end of bridge. Area under spall shows signs of efflor..,and dampness.

Note ID: 331210935620010

Span 001 -- Deck Elements: Curbs -- Rated 4, Was 6
Referenced Photos: "13"
2012-Right approach and bridfge curb has sand debris buildup preventing proper drainage off bridge deck.

Note ID: 33121093562000C

Span 001 -- Deck Elements: Mono Deck Surface -- Rated 4, Was 5
Referenced Photos: "6", "7", "9", "10"
2012- cracking evident in monodeck especially toward the end. Note one crack at end right which is right above an area with bad efflorescence below.

Note ID: 33121093562000E

Span 001 -- Deck Elements: Mono Deck Surface -- Rated 4, Was 5
Referenced Photos: "6", "7", "9", "10"

Last 10 feet of bay #4 cracked and has transverse efflo. Photo shows that area has previously been wet, although dry this date. This area is directly below the now concrete patched monodeck area, previously asphalt, which in turn enhances the monodeck rating.

Inspection Notes

Carried: 481I 481I33012067 Crossed: 290 290 33012023 CheckValue: 1,793,283,765

Note ID: 33121093562000E - continued

There are a couple of transvers cracks in the right lane of traffic at the one quarter point and the one third point of monodeck, overall rating raised to a 5 due to patched area at end right driving lane.

Note ID: 33121093562000F

Span 001 -- Superstructure: Structural Deck -- Rated 4, Was 4
Referenced Photos: "6", "7", "9", "10", "11", "14"

2012-Last 10 feet of bay #4 cracked and has transverse efflor. and dampness, arera above on mono deck shows cracks.

at the end, right under the spalling of the wearing surface above there is a 2.5' by 2.5' efflor area below.

Note ID: 33121093562000D

Span 001 -- Superstructure: Paint -- Rated 4, Was 4
Referenced Photos: "8"
2012-Left fascia girder, left web has spot rusting, with spot rusting along outer flanges, upper surface of fascia girders. Some surface rusting of lower flanges.

Paint is peeling on underside of lower flanges in spot locations.

Overall paint loss is 15%.

Note ID: 331210935620000

End Abut -- Abutment: Seats and Pedestals -- Rated 5, Was 4
Referenced Photos: "5"
2012- Cleaned since last inspection.

Inspection Date: 4/17/2012 RC: 33 BIN: 1093562

Inspection Photos in Photo Number Order

Carried: 481I 481I33012067 Crossed: 290 290 33012023 CheckValue: 1,793,283,765

Beg Ped #3 (typ)



Photo Number: 5 Photo Filename: DSCN3317.jpg

End deck Bays 5-4



Photo Number: 6 Photo Filename: DSCN3331.jpg

Inspection Date: 4/17/2012 RC: 33 BIN: 1093562

Inspection Photos in Photo Number Order

Carried: 481I 481I33012067 Crossed: 290 290 33012023 CheckValue: 1,793,283,765

Location:
End deck Bay 2



Photo Number: 7 Photo Filename: DSCN3332.jpg

Lt fascia paint looking toward End



Photo Number: 8 Photo Filename: DSCN3316.jpg

Inspection Date: 4/17/2012 RC: 33 BIN: 1093562

Inspection Photos in Photo Number Order

Carried: 481l 481l33012067 Crossed: 290 290 33012023 CheckValue: 1,793,283,765

Location:
End Bay 4 deck between int dia 3-4

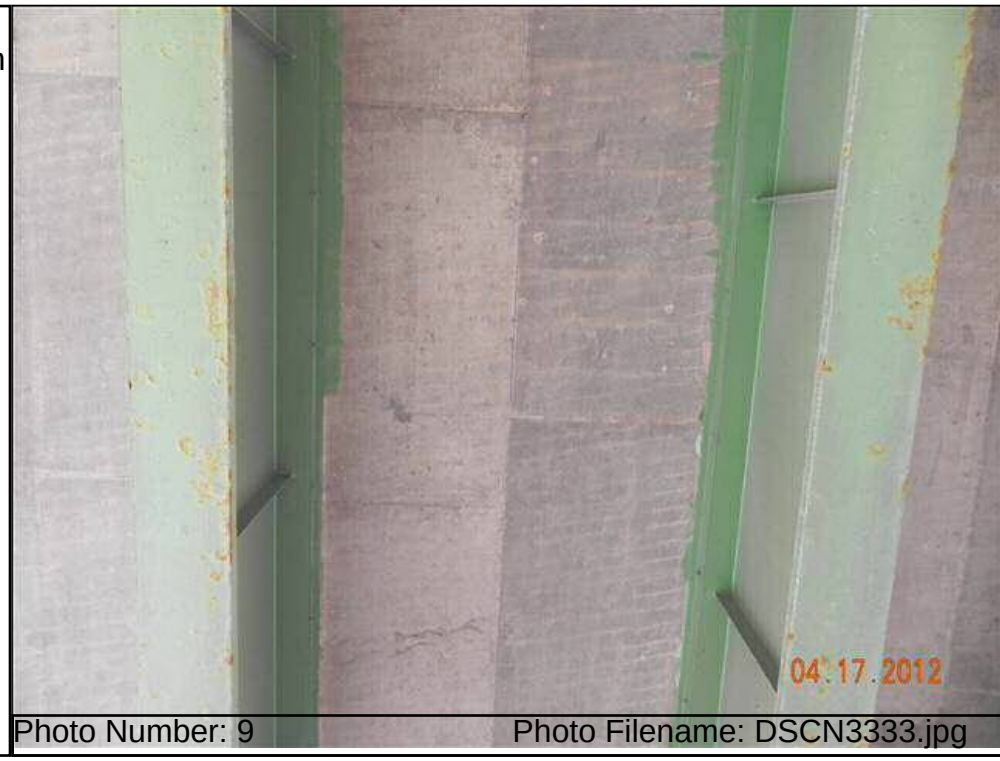

Photo Number: 9 Photo Filename: DSCN3333.jpg

Location:
End Bay 4 deck between int dia 3-4

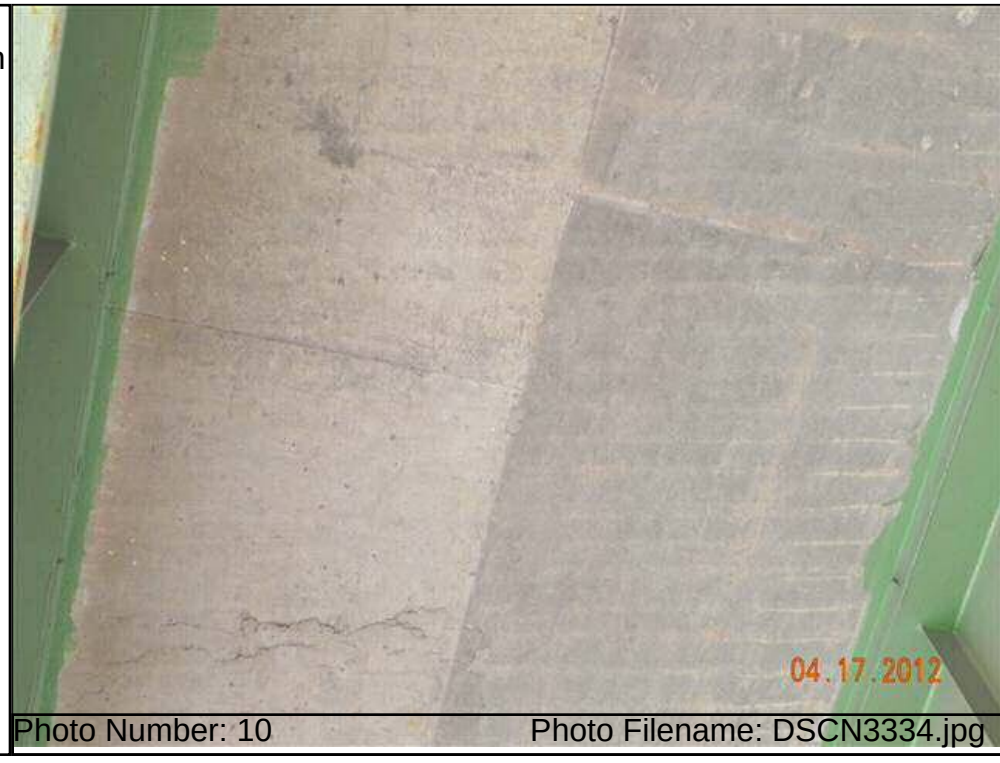

Photo Number: 10 Photo Filename: DSCN3334.jpg

Inspection Date: 4/17/2012 RC: 33 BIN: 1093562

Inspection Photos in Photo Number Order

Carried: 481I 481I33012067 Crossed: 290 290 33012023 CheckValue: 1,793,283,765

Location:
End deck near mid-span



Photo Number: 11 Photo Filename: DSCN3354.jpg

Beg Rt appr GR



Photo Number: 12 Photo Filename: DSCN3357.jpg

Inspection Date: 4/17/2012 RC: 33 BIN: 1093562

Inspection Photos in Photo Number Order

Carried: 481I 481I33012067 Crossed: 290 290 33012023 CheckValue: 1,793,283,765

Rt curb looking toward End



Photo Number: 13 Photo Filename: DSCN3358.jpg

Location:
End Rt deck patch



Photo Number: 14 Photo Filename: DSCN3360.jpg

Inspection Date: 4/17/2012 RC: 33 BIN: 1093562

Inspection Sketches in Sketch SysID Order

Carried: 481I 481I33012067 Crossed: 290 290 33012023 CheckValue: 1,793,283,765

Sketch ID: 331210935620000 Sketch Filename: LdRatNCL.12

Beg Abut -- Wingwalls: Footings -- Rated 9, Was 9
Referenced Photos:

Region 3 LoadRatingFieldCheckForm

NYSDOT BRIDGE INSPECTION REPORT			
SHEET	1	OF	1

LOAD RATING FIELD CHECK FORM

BIN:	1034410		Insp. Date:	04/30/2010

Dead Load - Note Changes since Last load Rating or state "NONE":

NONE

Section Loss -Note Changes since Last load Rating or state "NONE":

NONE

Additional Notes:

NONE

Attachments:

Team Leader: Peter Riehlman

Inspection Date: 4/17/2012 RC: 33 BIN: 1093562

Inspection Sketches in Sketch SysID Order

Carried: 481I 481I33012067 Crossed: 290 290 33012023 CheckValue: 1,793,283,765

Sketch ID: 331210935620002 Sketch Filename: LdRatNCL.12

General Sketch for Bridge
Referenced Photos:

Region 3 LoadRatingFieldCheckForm

NYSDOT BRIDGE INSPECTION REPORT			
SHEET	1	OF	1

LOAD RATING FIELD CHECK FORM

BIN:	1034410		Insp. Date:	04/30/2010

Dead Load - Note Changes since Last load Rating or state "NONE":

NONE

Section Loss -Note Changes since Last load Rating or state "NONE":

NONE

Additional Notes:

NONE

Attachments:

Team Leader: Peter Riehlman

Inspection Date: 4/17/2012 RC: 33 BIN: 1093562

Inspection Sketches in Sketch SysID Order

Carried: 481I 481I33012067 Crossed: 290 290 33012023 CheckValue: 1,793,283,765

Sketch ID: 331210935620003 Sketch Filename: deck sketch.tif

Span 001 -- Superstructure: Structural Deck -- Rated 4, Was 4
Referenced Photos: "6", "7", "9", "10", "11", "14"

deck sketch

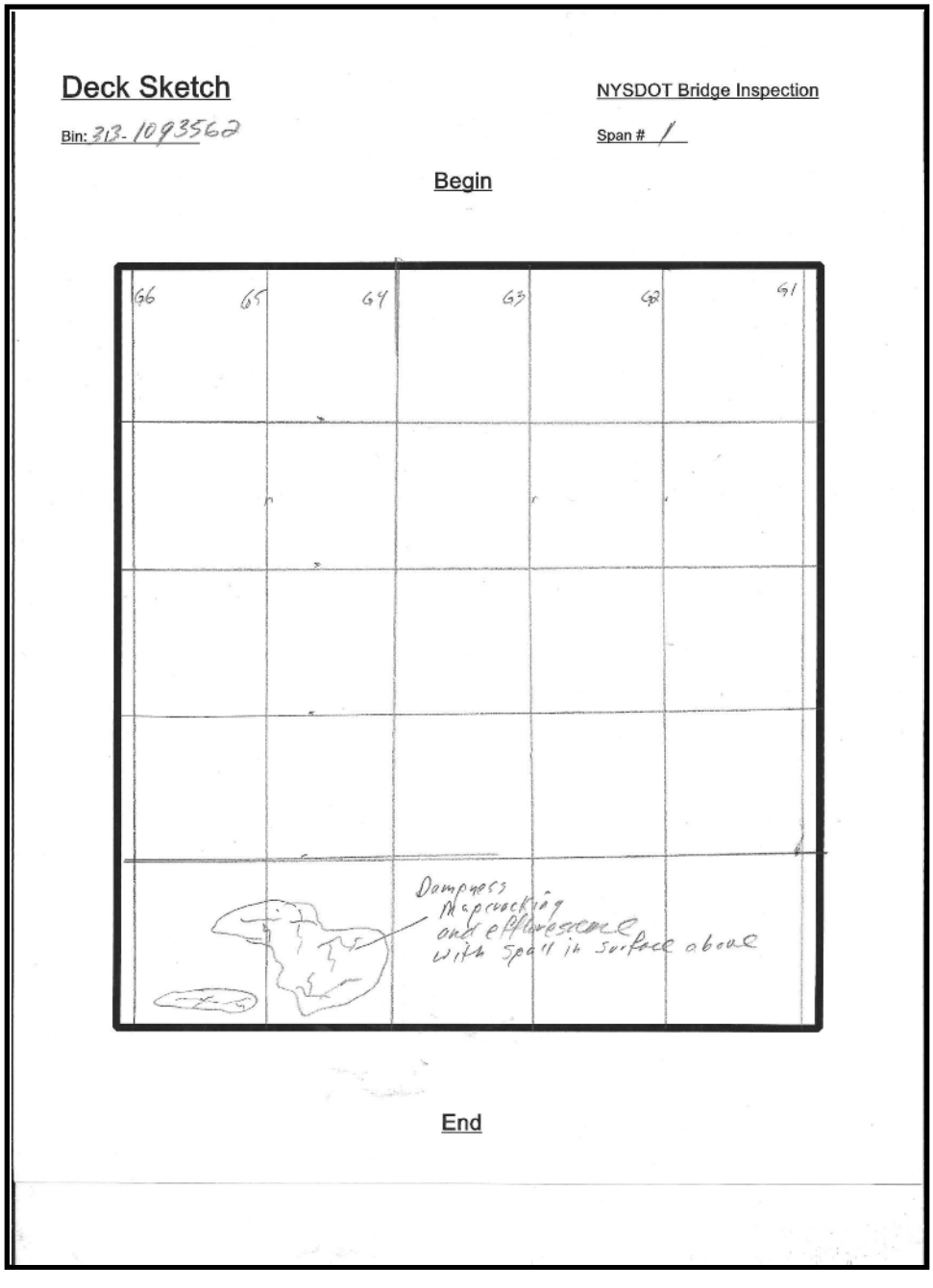

Inspection Date: 4/17/2012 RC: 33 BIN: 1093562

Gen. Rec., Postings, Federal Ratings, etc.

Carried: 481I 481I33012067 Crossed: 290 290 33012023 CheckValue: 1,793,283,765

Overall Condition:

GENERAL RECOMMENDATION: 5

Computed Condition Rating: 5.031

Problems Requiring Action:

NO Further Investigation Needed

SAFETY Flag(s) Issued

POSTINGS:

Inspector Confirmed existing Posting data as correct.
Posted Vertical Clearance ON the bridge is: No Posting
Posted Vertical Clearance UNDER the bridge is: No Posting
No Load Restriction is posted on this bridge

Overloads Observed:

NO Overload Vehicles were observed on this bridge

FEDERAL RATINGS:

NBI Deck Condition: 5
NBI Superstruct Condition: 8
NBI Substruct Condition: 7
NBI Channel Condition: N
NBI Culvert Condition: N

Diving Inspection Needs:

Diving Inspection Required? No Date of Last Diving Inspection: No Date

Inventory Problems:

Inventory Problems Exist? No

Miscellaneous:

Time Required to Inspect Bridge: 4 Hours

Lane Closure Needs: None Required

No Railroad Flagging Required

No Pedestrian Fence

There is a Snow Fence present

The BIN Plate is in OK condition

Inspection Date: 4/17/2012 RC: 33 BIN: 1093562

Gen. Rec., Postings, Federal Ratings, etc.

Carried: 481I 481I33012067 Crossed: 290 290 33012023 CheckValue: 1,793,283,765

Special Emphasis Inspection Required:

Non-Redundant/Fracture Critical Members - No
Pin and Hangers - No
Fatigue-Prone Welds - No
Non-Categorized Fatigue-Prone Details - No
Other (Specified in Text) - No

Special Emphasis Details:

No Special Emphasis Inspection Required.

General Notes To the Next Inspector:

Good bin plate is on the beginning right wingwall.

Improvements Observed:

Inspection Date: 4/17/2012 RC: 33 BIN: 1093562

Review Progress and Personnel Present at Inspection

Carried: 481I 481I33012067 Crossed: 290 290 33012023 CheckValue: 1,793,283,765

Inspection Submission Status:

Submitted to QC Engineer on: 7/6/2012
QC Submission Number: 35320202

QC Review Completed: 11/29/2012
QC Engineer: James R. Manning

Submitted to Liaison Engineer on: 11/29/2012
Liaison Submission Number: 5320401

Liaison Review Completed: 12/13/2012
Liaison Engineer: TODD M. HERMANN

Submitted for BIIS Processing on: 12/13/2012
BIIS Submission Number: .kp1

Current Status: Keypunched, Sent to BIIS
Check Value: 1,793,283,765

Personnel Present During Inspection:

Peter Riehlman - Team Leader
Rebecca Maurer - Assistant Team Leader
Tony Norland - lane closures
Paul Russell - lane closures

Discovery Date: 4/18/2012 RC: 33 BIN: 1093562

Safety Flag 33120007

Carried: 481I 481I33012067 Crossed: 290 290 33012023

Prompt Interim Action Recommended: No

Inspector: Riehlman, Peter
Flag Number: 33120007

Date Discovered: 4/18/2012
Supersedes Flag Number: _____

Bridge Description:
BIN: 1093562 Carried: 481I 481I33012067 Crossed: 290 290 33012023

Region: 3 - Syracuse County: 3 - Onondaga
Political Unit: 0233 - Town of DEWITT
Residency Code: - N/A
Primary Owner: 10 - State Department of Transportation
Secondary Owner: 99 - One Agency - Listed in first subfield
Primary Maintenance: 10 - State - Highway Maintenance
Secondary Maintenance: 99 - One Agency - Listed in first subfield
Year Built: 1972 Not Posted For Load

Number of Spans by Type:

Num	Type	Description
001	113	Steel - Plate Girder, Multi-Girder

Bridge is wholly or partially owned or maintained by NYSDOT.

Description of Flagged Condition:
Oriented NW, TP350 Item 19, wearing surface rated 4.

spall and loose concrete at end of bridge. Area under spall shows signs of efflor..,and dampness.

2 Photos/Sketches Attached

Verbal Notifications: (For RED Flags and Safety Flags with PIA only)

To: _____ of Regional Office on _____ at _____

Signature: (a signed copy of this report will be placed in the BIN folder)
Flagged Bridge Report Completed By: Riehlman, Peter on 4/18/2012
Flagged Bridge Report Signed By: _____ on _____
Riehlman, Peter

(This PDF Report Created: 12/14/2012 8:44:25 AM)

Discovery Date: 4/18/2012 **RC: 33 BIN: 1093562**

Safety Flag 33120007 Attachment

Carried: 481I 481I33012067 Crossed: 290 290 33012023

DSCN3332.jpg - Attached to Safety Flag 33120007

Deck area under spalled wearing surface



Discovery Date: 4/18/2012 **RC: 33 BIN: 1093562**

Safety Flag 33120007 Attachment

Carried: 481I 481I33012067 Crossed: 290 290 33012023

DSCN3354.jpg - Attached to Safety Flag 33120007

spall with loose concrete at north end of bridge



Inspection Date: 4/17/2012 RC: 33 BIN: 1093562

Inspection Access Requirements

Carried: 481I 481I33012067 Crossed: 290 290 33012023 CheckValue: 1,793,283,765

Equipment Required for Inspection

Access Requirement Changes WERE Noted During This Inspection.
This Listing is from the Inspection.

ACCESS CATEGORIES FOR ENTIRE BRIDGE
Required: Walking, Step Ladder, Small Lift, Shadow Vehicle

ACCESS CATEGORIES FOR SPAN 1
Required: Walking, Step Ladder, Small Lift, Shadow Vehicle

Inspection Date: 4/17/2012 RC: 33 BIN: 1093562

Culvert Measurements

Carried: 481I 481I33012067 Crossed: 290 290 33012023 CheckValue: 1,793,283,765

Culvert Measurements

NO CULVERT DATA FOR BIN 1093562

Standard Photos **RC: 33 BIN: 1093562**

Carried: 481I 481I33012067 Crossed: 290 290 33012023

1093562_LOCATION_MAP.JPG

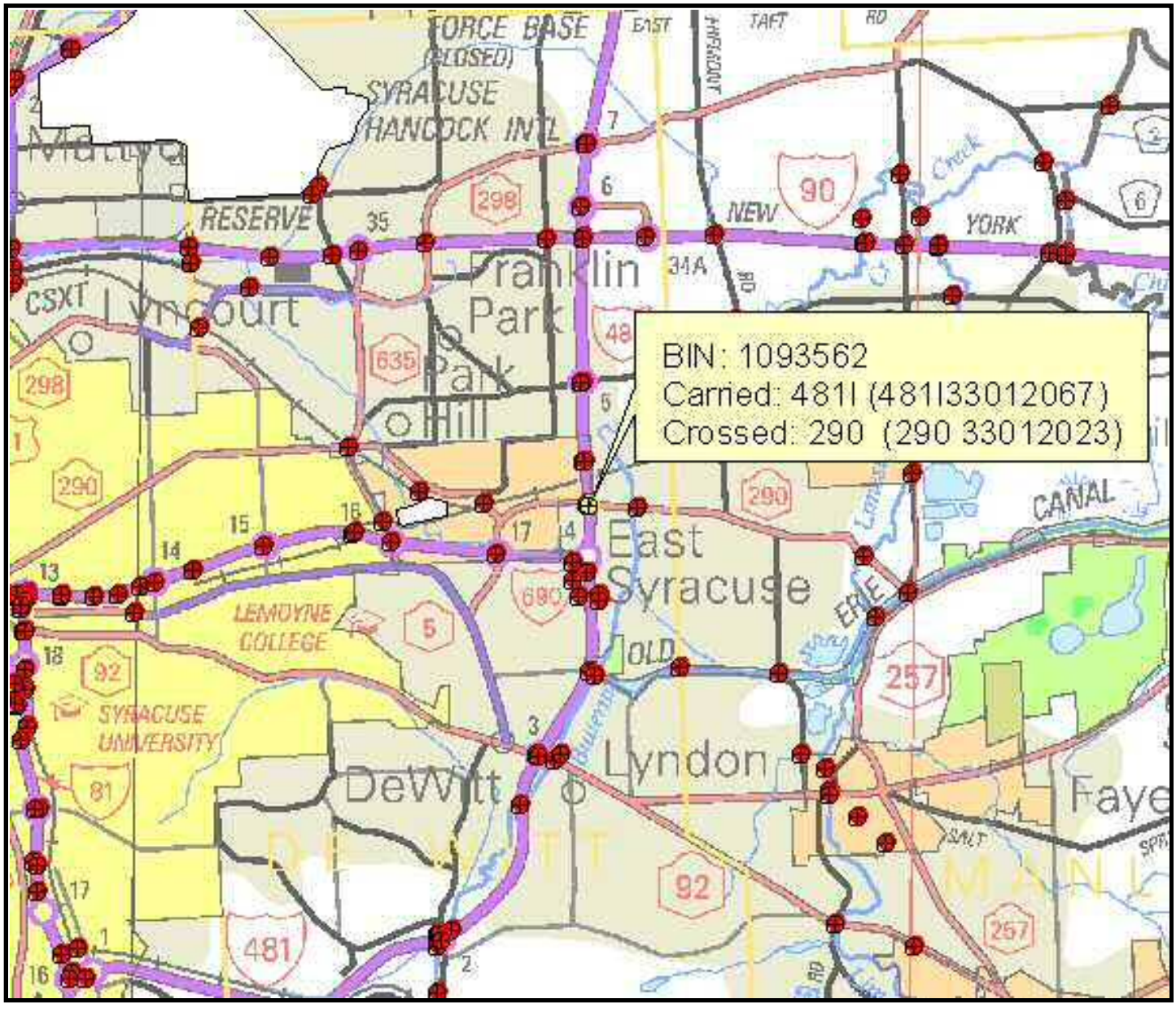

Standard Photos **RC: 33 BIN: 1093562**

Carried: 481I 481I33012067 Crossed: 290 290 33012023

1093562_QUAD_MAP.JPG

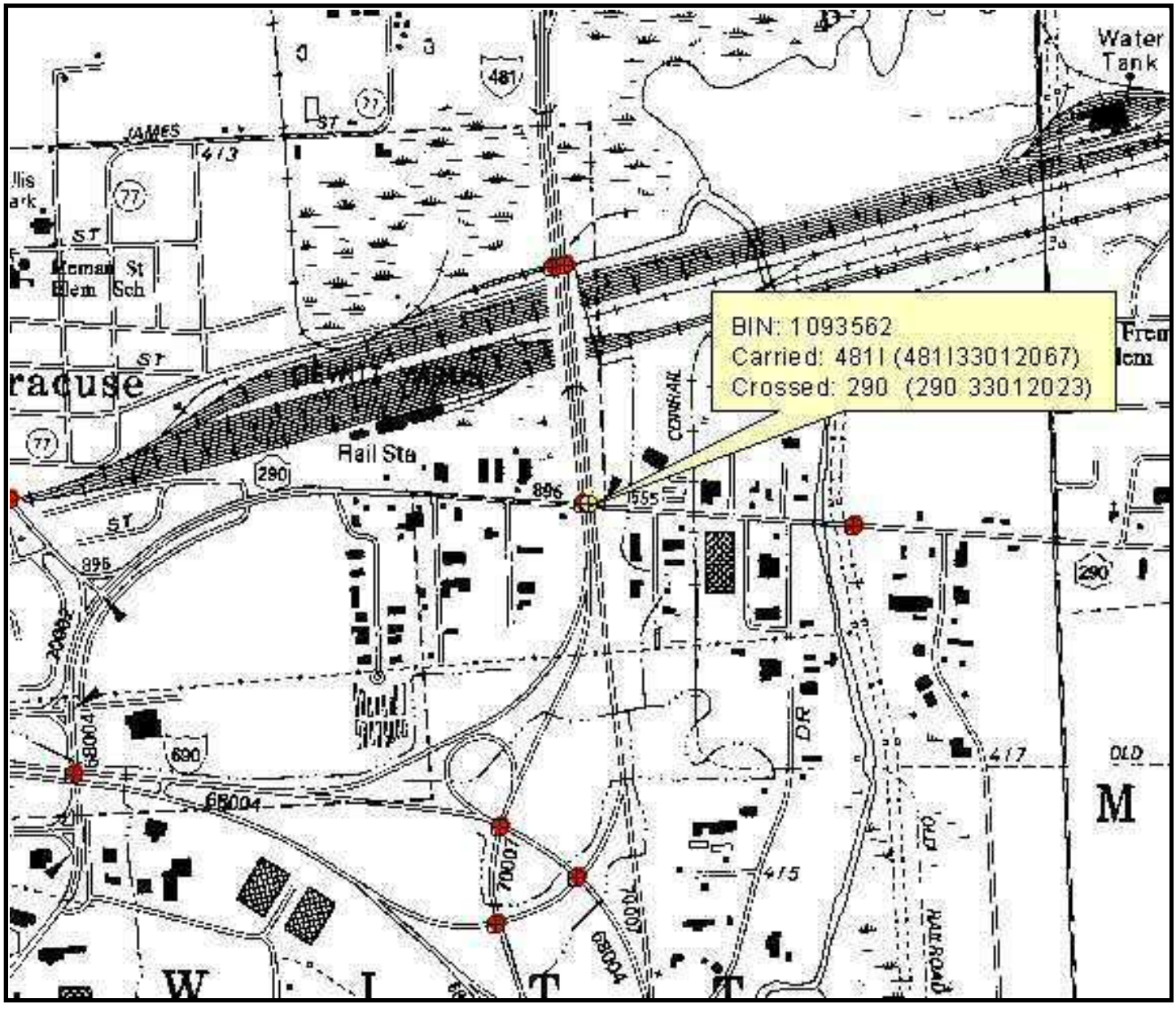

AbutmentEnd.12.jpg

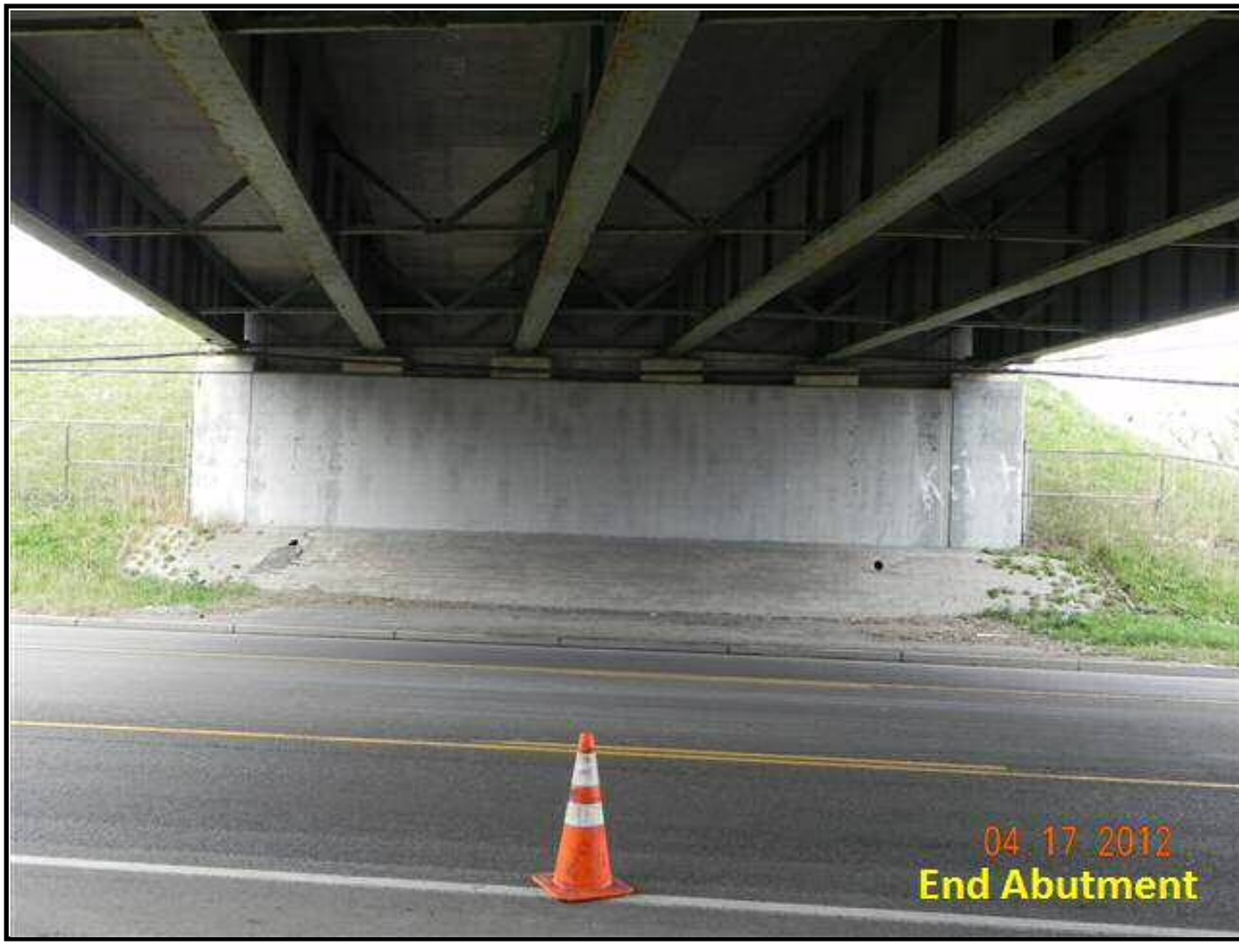

Standard Photos **RC: 33 BIN: 1093562**

Carried: 481l 481l33012067 Crossed: 290 290 33012023

ApproachBegin.12.jpg



Standard Photos **RC: 33 BIN: 1093562**

Carried: 481I 481I33012067 Crossed: 290 290 33012023

ApproachEnd.12.jpg



ElevationSpan1.12.jpg



Standard Photos **RC: 33 BIN: 1093562**

Carried: 481l 481l33012067 Crossed: 290 290 33012023

F2CrossedSpan1Left.12.jpg

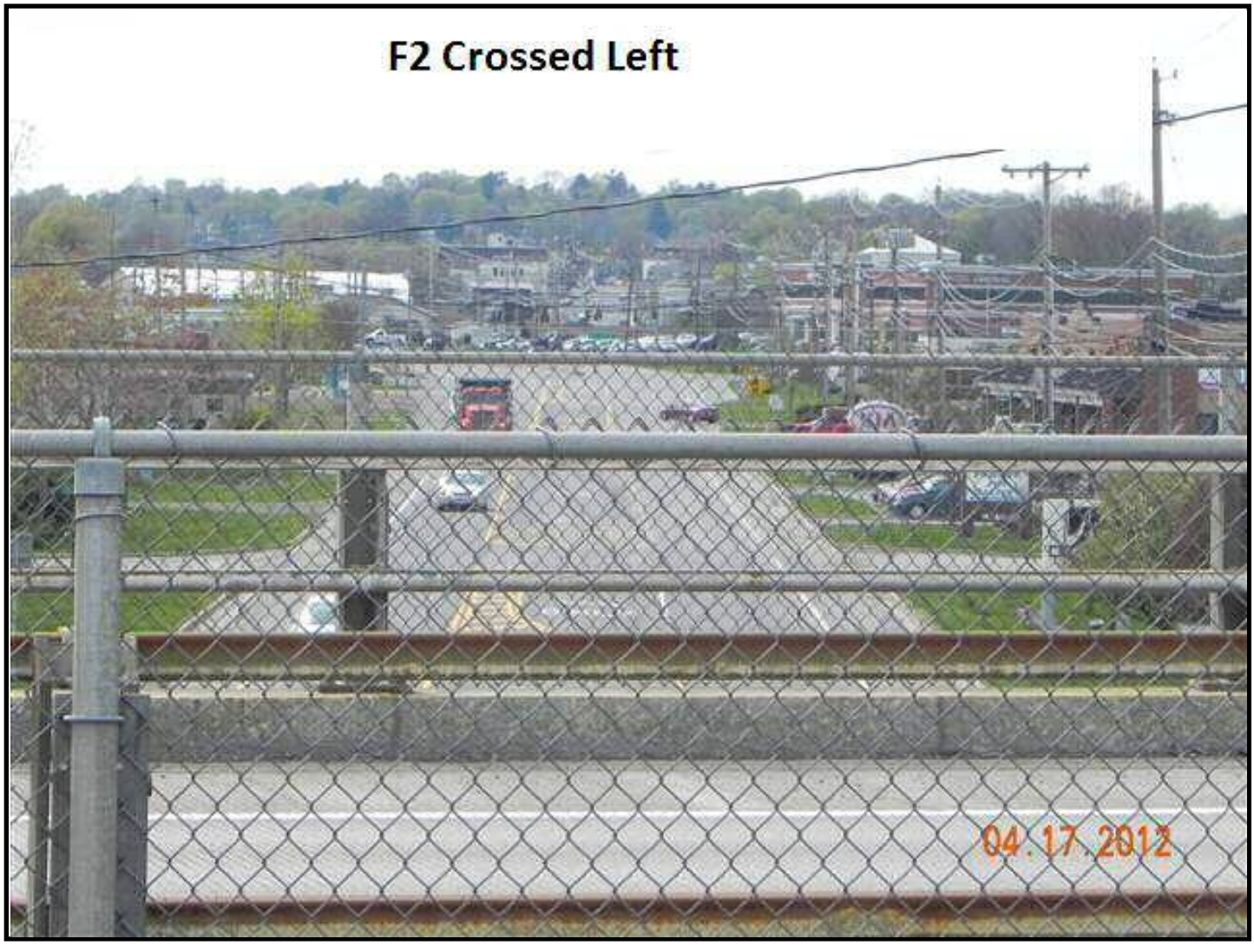

Standard Photos **RC: 33 BIN: 1093562**

Carried: 481I 481I33012067 Crossed: 290 290 33012023

F2CrossedSpan1Right.12.jpg



FramingSpan1.12.jpg



LEVEL 1 LOAD RATING SUMMARY SHEET

Region/County Region 3/Onondaga BIN 1093562
Feature(s) Carried and Crossed I-481 Northbound/I-290
Date of field inspection upon which Level 1 rating is based 1/15/2014

OVERALL BRIDGE RATTNGS (BASED ON LOWEST RATED ELEMENTS):

Total number of rating units 1

	H inventory	H operating	HS inventory	HS operating
Rating	H 33.55 (tons)	H 56.03 (tons)	HS 52.21 (tons)	HS 87.19 (tons)
Lowest rated element	Interior Girder G2, G3, G4, and G5	Interior Girder G2, G3, G4, and G5	Interior Girder G2, G3, G4, and G5	Interior Girder G2, G3, G4, and G5

Analysis method LFR Comments

Individual Rating Unit Level 1 values:

Rating unit span(s) 1

Main member ratings

	H inventory	H operating	HS inventory	HS operating
Rating	H (tons)	H (tons)	HS (tons)	HS (tons)
Lowest rated element				

Analysis method Comments

Floorbeam ratings

	H inventory	H operating	HS inventory	HS operating
Rating	H (tons)	H (tons)	HS (tons)	HS (tons)
Lowest rated element				

Analysis method Comments

Stringer ratings

	H inventory	H operating	HS inventory	HS operating
Rating	H 33.55 (tons)	H 56.03 (tons)	HS 52.21 (tons)	HS 87.19 (tons)
Lowest rated element	Interior Girder G2, G3, G4, and G5	Interior Girder G2, G3, G4, and G5	Interior Girder G2, G3, G4, and G5	Interior Girder G2, G3, G4, and G5

Analysis method LFR Comments

Certified by Date

Quality Control Engineer Signature Date
Agency or Company represented by certifier

Note:
-If connection ratings govern, record them under stringer ratings for stringer – floorbeam connection, floorbeam ratings for floorbeam-main member connections, etc.
-When Level 1 results indicated the need for load posting or other corrective action, the NYSDOT Regional Structures Engineer shall be notified immediately.
-Load ratings should be filed in the regional office within 60 days of completion of calculations.
-Bridges shall be flagged based on Level I results in accordance with the current NYSDOT flagging procedure.
-Bridge load posting, closure, etc. determinations shall be made as results are being produced.

PARSONS

100 Broadway
New York, NY 10005
Phone: 212-266-8300
Fax: 212-571-6825
www.parsons.com

TECHNICAL MEMORANDUM

FROM: Kian Siang Chau, P.E
NYSPE 082744

DATE: MARCH 26, 2014

RE: SEISMIC SCREENING SUMMARY
NEW YORK STATE DEPARTMENT OF TRANSPORTATION
D031085; PIN 3501.60; I-81

BIN: 1093562 (I-481 NB / RT 290)

This memorandum summarizes the seismic screening conducted for BIN 1093562 as part of the Interstate 81 Project in Syracuse, NY. The purpose of the screening is to determine if seismic retrofits are warranted at the superstructure to substructure connection, and if further seismic evaluation of the structure is required. This memorandum will give the screening results, retrofits required and recommendations for further seismic evaluation of the structure.

SCREENING PROCEDURE

The seismic screening was performed in accordance with the FHWA Seismic Retrofitting Manual for Highway Structures: Part 1 - Bridges, January 2006. As per the referenced manual, seismic screenings were performed for both lower level and upper level earthquake ground motion. The lower level earthquake ground motion has a reasonable likelihood of occurrence within the life of the bridge (50% probability of exceedance within a 75 year bridge life). The upper level earthquake ground motion has a finite likelihood of occurrence within the life of the bridge (7% probability of exceedance within a 75 year bridge life).

Values for the spectral acceleration for the Syracuse area used in the screening are as follows:

- Lower Level Earthquake Ground Motion for a Short Period (0.2 seconds): $S_S = 0.0251$
- Lower Level Earthquake Ground Motion for a Long Period (1.0 seconds): $S_1 = 0.0076$
- Upper Level Earthquake Ground Motion for a Short Period (0.2 seconds): $S_S = 0.139$
- Upper Level Earthquake Ground Motion for a Long Period (1.0 seconds): $S_1 = 0.047$

These values are considered constant and are the same for all seismic screenings of bridges in the Syracuse area.

The Site Class is based on the soil conditions at the bridge location. It was determined that this parameter has little effect on the results of the seismic screening because the spectral acceleration values for the Syracuse area are small. Based on this, a site class of D was used for all seismic screenings of bridges in the Syracuse area.

Bridge parameters used in the seismic screening were retrieved from the record drawings and WinBolts data.

The seismic screening takes into account the anticipated service life, importance, and the seismic exposure of the bridge to determine a seismic retrofit category (SRC). The SRC is then used to determine seismic evaluation methods and retrofit measures. There are four SRCs, A through D. Seismic retrofit category A is the lowest category; bridges in this category do not require retrofits or further seismic evaluation. Seismic retrofit category D is the highest category; bridges in this category requiring the most rigorous seismic evaluations and retrofits.

SCREENING RESULTS

The SRC for the bridge is "**C**" for lower level earthquake ground motion and "**B**" for upper level earthquake ground motion.

RETROFITS REQUIRED

No seismic retrofits are required for the bridge superstructure to substructure connection.

RECOMMENDATIONS FOR FURTHER SEISMIC EVALUATION

For the lower level earthquake ground motion, it is recommended that capacity/demand ratios for bridge components are calculated as per Section 5.4 of the referenced manual. For the upper level earthquake ground motion, it is recommended that the capacities of the bearings are checked as per Section 5.2 of the referenced manual.

Retrofit cost estimates will be provided after any further required seismic evaluations are completed.

IN-DEPTH INSPECTION REPORT

D031085 P.I.N. 3501.60

ELEMENT SPECIFIC BRIDGE WORK

B.I.N. 3/3 1093571

TEAM LEADER George H Stam, P.E. 056216
NYSPE LICENSE #

ASSISTANT TEAM LEADER Timothy Olmstead

TEAM LEADER Andrew P. Thompson 84914
NYSPE LICENSE #

ASSISTANT TEAM LEADER Mike Savino

FEATURE CARRIED I-481 Southbound

FEATURE CROSSED CSX TRANS/AMTRAK

DATE FIELD WORK BEGAN 2/10/14

DATE FIELD WORK COMPLETED 3/27/14

TABLE OF CONTENTS

- STRUCTURE IDENTIFICATION
- INTRODUCTION
- PROJECT LOCATION MAP
- IN-DEPTH CONDITION DOCUMENTATION
- PLANS & SKETCHES
- IN-DEPTH PHOTO DOCUMENTATION
- ASBESTOS SAMPLING SURVEY
- LATEST BIENNIAL INSPECTION REPORT

STRUCTURE IDENTIFICATION

a.	Bridge Identification Number (BIN):	3/3 1093571
b.	Reference Marker:	481I 3301 2069
c.	Region:	NYSDOT Region 3
d.	County:	Onondaga
e.	Town:	Dewitt
f.	Feature Carried:	I-481 Southbound
g.	Feature Carried:	CSX TRANS/AMTRAK
h.	Orientation:	Northwest

INTRODUCTION

a. Bridge History

i.	Year Built:	1972
ii.	Bridge Type:	15 Span, Steel Multi-girder
iii.	Structure Length:	Span 1 – 85 feet Span 2 – 156 feet – 2 Inches Span 3 – 171 feet – 2 Inches Span 4 – 198 feet Span 5 – 198 feet Span 6 – 198 feet Span 7 – 124 feet Span 8 – 124 feet Span 9 – 124 feet Span 10 – 137 feet – 6 Inches Span 11 – 124 feet Span 12 – 124 feet Span 13 – 124 feet Span 14 – 124 feet Span 15 – 124 feet
iv.	Out-to-Out Width:	37 feet – 6 Inches
v.	Skew Angle:	9°
vi.	Structural Ratings and Rankings	
	1. Federal Sufficiency:	74.7 (July 2013)
	2. Condition Rating:	4.429 (July 2013)
	3. General Recommendation:	5 (July 2013)
vii.	Live Load Posting (HS25):	No

viii. National Highway System (NHS): Yes

ix. Previous work Done:
1987 – Replace wearing surface (asphalt concrete overlay) with concrete overlay
1991 – Clean and paint metal surfaces
1998 – Asbestos testing
1999 – Waterproofing bridge deck and corrosion inhibitor
2003 – Joint, bearing, pier, deck, abutment, & parapet repairs

x. Planned Future Work: N/A

b. Highway Classification

i. Functional Classification: Urban Principle Arterial - Interstate

ii. Traffic Volumes

YEAR	AADT
2014	25201
2034	37448
2054	55646

c. Plan for Maintenance and Protection of Traffic:
Maintenance and Protection of traffic will be achieved by staged construction involving a crossover detour with the northbound parallel bridge BIN 1093572.

PROJECT LOCATION MAP



IN-DEPTH CONDITION DOCUMENTATION

FEATURE CARRIED:	**I-481 SOUTHBOUND**	**TEAM LEADERS:**	**G. STAM & A. THOMPSON**
FEATURE CROSSED:	**CSX TRANS/AMTRAK**	**ASSIST.TEAM LEADERS:**	**T. OLMSTEAD & M. SAVINO**

REMARKS

GENERAL NOTE

Popli Design Group performed an In-depth Inspection of the I-481 Southbound bridge over Conrail - BIN 3/3 1093571. The field work began of 3/17/2014 and was completed on 3/27/2014. The inspection teams and their respective elements inspected are as follows:

Inspection team of A. Thompson, P.E. - Team Leader; and M. Savino – Assistant Team Leader

- underside elements:
  - piers 2, 4, 6, 8 thru 10
  - superstructure span 2 thru span 10
  - fascias span 1 thru span 15

Inspection team of G. Stam, P.E. – Team Leader; and T. Olmstead – Assistant Team Leader

- topside elements:
  - begin abutment
  - deck span 1 thru span15
  - superstructure span 1 thru span 15
  - end abutment
- approach pavement and drainage near the bridge
- underside elements:
  - begin abutment
  - piers 1, 3, 5, 7, and 11 thru 14
  - superstructure span 1, and span 11 thru span 15
  - end abutment

BEGIN ABUTMENT ITEMS

Begin Abutment - Joint with Deck:
The begin bearings are expansion. The begin joint is steel armored compression seal type in generally good condition (Photo 1). The steel armor plate is lightly rusted. The begin concrete header is cracked and spalled 4 feet long x 3 inches wide x 1 inch deep near the centerline. The seal is partially filled with sand and roadway debris. There is seepage staining down the backwall in girder bay 3, however, the backwall is dry and the joint seal appears to be functioning (Photo 2).

Begin Abutment – Bearings:
The begin bearings are expansion. The fascia bearings are moderately rusted and movement is likely restricted (Photo 3). The interior bearings are in better condition. The bearings are high rocker bearings and all the bearings are in a normal slightly constricted position at 6° F (Photo 4).

Begin Abutment - Seat and Pedestals:
There are stub abutments, therefore no seat. The right front corner and right side of pedestal P3 is cracked and hollow sounding (Photo 5). The remaining pedestals are in good condition with no significant cracks or hollow areas detected.

Begin Abutment – Backwall:
There is seepage staining down the backwall with tight mapcracking in girder bay 3 and the right fascia bay (Photos 2 & 6).

Begin Abutment – Stem:
There are stub abutments, therefore no stem.

REMARKS

END ABUTMENT ITEMS

End Abutment - Joint with Deck:
The end bearings are fixed. The steel armor angle was removed and replaced with a concrete pavement transition header. At the top, there is no joint visible (Photo 7).

End Abutment – Bearings:
The end bearing are fixed and in generally good condition.

End Abutment - Seats and Pedestals:
There are stub abutments, therefore no seat. The left side of the top of Pedestal P1 is hairline ctacked (Photo 8). The remaining pedestals are in good condition with no significant cracks or hollow areas detected.

End Abutment – Backwall:
There is scattered tight hairline cracking with efflorescence throughout. The upper left corner in the left fascia bay has 2 square feet of hairline cracking with light efflorescence (Photo 9). The bottom half of the backwall in bay 1 has scattered less than 1 inch deep surface pop-outs (Photo 10). In bay 2, there are several full height vertical hairline cracks. At the right side of bay 2, there is a full height crack with efflorescence and staining (Photo 11). At the right cheek wall and bottom of the right fascia bay, there is an 8 inches wide x 2 feet high x up to 6 inches deep spall with damp crumbly concrete and exposed rusted reinforcement (Photo 12). To the right and below the spall, there is a 2 square foot area of hollow sounding concrete.

End Abutment – Stem:
There are stub abutments, therefore no stem.

APPROACH ITEMS

Approach Drainage:
At the begin right, the asphalt pavement along the shoulder is slightly higher than the deck. There is evidence of shallow ponding along the right curbline at the begin joint with deck (Photo 13). There is evidence of seepage down the begin abutment backwall at the right side (Photo 6). At the end right approach, there is gravel build-up along the shoulder that traps run-off and there is evidence of shallow ponding along the curbline at the pavement transition (Photo 14). There is seepage down the end right backwall (Photo 12).

Approach Settlement:
There is no significant settlement at either approach.

Approach Pavement:
At both approaches, the asphalt pavement adjacent to the bridge is transverse cracked along the pavement transitions. (Photos 7 & 1).

DECK ITEMS

Deck - Wearing Surface:
The ride quality of the deck is smooth. There is moderate wear of the transverse sawcut traction grooving of the deck in the wheel paths (Photo 15).

Deck - Curbs:
There are sloped face granite curbs imbedded in the single sloped concrete parapets. Generally, the curbs are in good condition. There are scattered locations where there is loose or missing mortar at the curb joints (Photo 16).

The original curb reveal was installed at 15.5 inches reveal. The average curb reveal for each side in each span is as follows:

REMARKS

CURB REVEAL by SPAN		
Span No.	Left Curb Reveal (inches)	Right Curb Reveal (inches)
1	13.75	13.5
2	13.5	13.75
3	13.5	13.5
4	13.5	13.75
5	14.0	13.5
6	13.5	13.5
7	13.5	13.5
8	13.0	13.75
9	13.5	13.5
10	13.75	13.5
11	13.75	13.5
12	13.75	13.75
13	13.75	13.5
14	13.75	13.5
15	13.75	13.75

Deck – Sidewalks and Fascias:
Sidewalks – There are no sidewalks or safety walks on the bridge.

Fascias –
Both fascias in all spans have scattered hairline cracking and staining throughout (Photo 17). There are scattered locations of cracks, staining, delaminations and spalls (Photo 18). Significant locations are noted below:

Span 4 right fascia – at the begin above pier 3, the concrete is severely deteriorated with spalling up to 6 inches deep and crumbly concrete (Photo 19).

Span 5 right side – at the end near pier 5, there is hairline cracking, staining and a 0.5 square foot x 1 inch deep spall.

Deck – Railings and Parapets:
Railings - There are 12 inches high aluminum railings anchored to the top of the concrete parapets (Photo 33). Generally, the railings are in good condition.

Parapets - In 2003, the concrete parapets received partial concrete repairs primarily to the top and top half of the inside face. The parapets exhibit extensive horizontal cracking and scattered locations of staining of the inside faces at 3 inches to 6 inches below the top of the parapet (Photos 20 & 21); and in areas surrounding previous repairs (Photo 22). The outside faces are also typically cracked with scattered locations of staining (Photos 23 & 24).

There are scattered areas of more extensive cracking, delamination and spalling with exposed reinforcement as noted below:

Span 3 right @ begin – an 8 inches long x 12 inches high x 2 inches deep spall at the span 2 joint (Photo 25).

Span 4 left @ mid-span – a +/-30 feet long area with severe cracking and spalled along the outside top edge with exposed rusted reinforcement (Photo 26); and severe cracking and delamination on the inside top edge(Photo 27).

Span 5 left ¼ span – spalled along the outside top edge exposed rusted reinforcement (Photo 28).

Span 5 left 2/3 span – spalled along the inside top at railing post. There is minor staining of the concrete, but the railing post anchors are not exposed. (Photo 29).

Span 5 right 1/3 span – spalled along the outside top edge with exposed rusted reinforcement (Photo 30).

Span 5 right 2/3 span – spalled along the outside top edge.

Span 6 left @ begin ¼ span – area of heavy cracking along the top edge. There is a 30 feet long section

REMARKS

with severe cracking and crumbly concrete and a 5 feet long section of spalling with exposed reinforcement (Photo 31).
Span 7 left @ 1/4 span - spalled along the inside top at railing post. There is minor staining of the concrete, but the railing post anchors are not exposed. (Photo 32).
Span 8 left @ ¼ span – cracked, stained and delaminated along the inside and outside faces (Photos 33 & 34).
Span 8 left @ mid-span - spalled along the outside top edge with exposed reinforcement (Photo 35).
Span 8 right @ mid-span - spalled along the outside top edge with exposed reinforcement (Photo 36).
Span 10 left @ end – cracked, stained and delaminated with efflorescence along the outside and inside faces (Photos 37 & 38).
Span 13 left @ mid-span – cracked, stained and delaminated with efflorescence along the outside face (Photo 39).

SUPERSTRUCTURE ITEMS

Structural Deck:
Record plans indicate the original structural deck is 8 inches thick concrete mono-deck. SIP forms were used. Records indicate the deck was repaired, the surface was scarified and it received a 1.5 inch minimum concrete overlay in 1987. Curb reveal measurement would indicate a nominal existing deck thickness of 9.75 inches to 10 inches.

Top of Deck - There is scattered random cracking with hollow areas throughout as illustrated in the Top of Deck Deterioration Sketch. The total hollow and spalled area; and percent of deteriorated span surface are noted in the table below:

DECK DETERIORATION QUANTITIES		
Span No.	Deteriorated Area (square foot)	Percent of Deteriorated Area
1	446.75	15.5
2	303.5	5.7
3	97.5	1.7
4	132.5	2.0
5	426.0	6.3
6	277.0	4.1
7	271.0	6.4
8	105.5	2.5
9	64.0	1.5
10	203.5	4.8
11	118.5	2.8
12	64.5	1.5
13	92.75	2.2
14	190.5	4.5
15	56.0	1.3
Total	2849.5	4.0

Significant locations of deterioration are noted below:
Span 1 left lane – severely cracked in the begin and end ¼ spans.
Span 1 right lane – Severely cracked with hollow areas at mid-span and end 1/3 span (Photo 40).
Span 2 left lane - severely cracked in the end ¼ span.
Span 2 right lane - tight mapcracking throughout. The worst is at 2/3 span and near the end 1/4 span.
Span 3 right lane – tight mapcracking throughout (Photo 41). Heavy cracking and hollow areas near ¼

REMARKS

span and mid-span (Photo 42).
Span 4 right lane – heavy cracking and hollow area near mid-span.
Span 5 left lane – severe longitudinal cracking with hollow areas in the middle ½ span (Photo 43).
Span 6 left lane – severe cracking with hollow areas in the begin 2/3 span.
Span 7 right lane – cracking throughout. Worst is in the begin 1/2 span with extensive hollow area.
Span 8 left lane – heavily cracked throughout with scattered hollow areas (Photo 44).
Span 9 left lane – moderately cracked throughout. The begin ½ span near the right wheel path is heavily hairline cracked (Photo 45).
Span 9 right lane – heavily cracked in the begin 1/3 span.
Span 10 left lane – heavily cracked near the end of the span.
Span 10 right lane – moderate cracking throughout.
Span 11 right lane – moderate cracking throughout.
Span 12 left lane – a 2 square foot severely cracked area with segmented chunks at the begin in the right wheel path (Photo 46). Heavily cracked in the end ¼ span (Photo 47).
Span 13 right lane – severely cracked with hollow areas in the begin ½ span.
Span 14 left lane – extensive transverse and longitudinal cracking with scattered hollow areas near mid-span (Photos 48 & 49)
Span 14 right lane – cracking and hollow areas near ¼ span and end of the span.
Span 15 left lane – severe mapcracking and hollow areas near end. (Photo 50).
Span 15 right lane – scattered longitudinal cracks and hollow areas throughout.

Underdeck – There are stay-in-place forms at the underside of the deck throughout (Photo 51). Typically, at the ends of the deck at the joints there is rusting of the SIP's indicating leakage of the joints or seeping at the headers (Photo 52). Typically in each span, there is a 2.5 feet length of SIP that had been removed for inspection at the time of construction. The exposed deck and surrounding forms in these areas were in good condition.

Primary Members:
Generally, the primary members are in good condition with only surface rusting where the paint has blistered or peeled. More extensive peeling and blistering of the paint; and localized corrosion of the steel at the girder ends is evident near leaky superstructure joints. There were no warping, crushing or other distortions of the primary members evident at heavily corroded locations above the bearings. Significant corrosion locations are noted below:

Span 3 girder G4 at end - the bottom right side of the web and right stiffener in a 3 inches high band above the bottom flange above the bearing. Section loss is estimated at less than 5% (Photo 53). There are no significant section loss of the inside bearing stiffener.
Span 5 girder G1 at end – the bottom right side of the web in a 3 inches high band above the bottom flange above the bearing. The corrosion is concentrated at the begin side of the bearing stiffener (Photos 54 & 55). Section loss readings taken by "D" meter show up to 50% percent localized section loss in the 3 inch high band. There are no significant section losses of the bearing stiffeners, or the web on the end side of the stiffener. Total section loss is 5% of the web and stiffeners section above the bearing.
Span 6 girder G4 at begin - the bottom outside (right) bearing stiffener (Photo 56). The section loss of the stiffener is estimated at less than 5%. There are no significant section losses of the web or inside bearing stiffener.
Span 14 girder G1 at end - the bottom outside (left) bearing stiffener (Photo 57). The section loss of the stiffener is estimated at less than 5%. There are no significant section losses of the web or inside bearing stiffener.
Span 15 girder G1 at begin - the bottom outside (left) bearing stiffener (Photos 57 & 58). The section loss of the stiffener is estimated at less than 10%. There are no significant section losses of the web or inside bearing stiffener.
Span 15 girder G4 at begin - the bottom outside (right) web and bearing stiffener (Photos 59, 60, 61, & 62). Section loss readings taken by "D" meter and caliper show 37% percent localized section loss of the web and outside stiffener in a 3 inch high band of corrosion above the bottom flange. There are no significant section loss of the inside bearing stiffener. Total section loss is 15% of the web and stiffeners

REMARKS

section above the bearing.

Secondary Members:
Generally, the secondary members are in good condition with only surface rusting where the paint has blistered or peeled. More extensive peeling and blistering of the paint; and corrosion of the secondary member steel has occurred near leaky superstructure joints. Significant locations are noted below:

Span 2 at begin girder bay 1 – lower begin right diagonal gusset plate is heavily corroded with +/- 50% maximum section loss (Photo 63).

Span 2 at end and Span 3 at begin – gusset plates for bottom laterals have +/-67% maximum section loss with no rust-thru holes (Photo 64).

Span 3 at end girder bay 1 – lower end left “k”-bracing gusset plate is heavily corroded with a 1.5 inch diameter rust thru hole (Photo 65).

Span 4 at end and span 5 at begin – gusset plates for bottom laterals have +/-50% maximum section loss with no rust-thru holes (Photo 66).

Span 7 – bay 2 begin diaphragm – bottom chord angle deflected toward end 4” (Photo 67). Connections to the girders are intact.

Paint:
The paint system is failed on 10% of the surfaces of the girders and diaphragms. There is cracking and peeling of the paint on the bottom flanges and scattered locations on the girder webs (Photo 68). The top of the outside bottom flanges are worst with 50% of the surface having blistered and peeling paint (Photo 69). There is 50% to 100% paint failure on end diaphragms and diaphragm gusset plates where leaky joints exist (Photo 70). There is surface rusting where the paint has peeled or blistered.

Joints:
There are three types of pier joints on the bridge. Spans 1, 2, 3, 4, 5, & 9 are either 2.5 inch wide, or 11 inches x 6 inches wide steel angle armored open joints with below deck gutter system. Spans 6, 7, 8, 10, 11, 12, 13, 14 are 1 inch wide steel angle armored compression seal joints. All joints appeared in generally good condition from above. Spans 1, 2, & 9 joints have elastomeric concrete headers. The span 1 end side header in the right lane is cracked and segmented 2 feet wide x full width in the left wheel path and cracked in the right wheel path (Photo 71). The span 9 header is cracked near the centerline and in the right lane (Photo 72). The below deck joint gutters in Spans 1, 2, 3, and 9 are filled with debris (Photos 73 & 74). The supports for the gutters have rust with minor section loss but are functioning properly (Photo 70). The hopper of the left side gutter and downspout system at span 5 joint is corroded and leaking on the substructure element below (Photos 75 & 76). Typically, the steel angles and plates on the underside of the joints are heavily rusted with section loss and holes (Photo 73 and 74). The joints in Spans 3, 5, 6, 7, 8, and 10 thru 14 have their steel angles rusted away underneath exposing the underside of the headers which are moderately to heavily spalled throughout their lengths (Photos 74 & 77).

PIER ITEMS

Pier Bearings:
The begin row of bearings on each pier is fixed, and the end row is expansion. Typically, the bearings have peeling and blistering paint with light to heavy corrosion (Photo 78). The bearings on piers 1 thru 3 and 6 thru 14 are high rockers. The typical condition is light to heavy pack rust with contracted rockers; except the rockers at pier 14 were extended or neutral at 35° F. Specific conditions are noted as follows:

REMARKS

PIER HIGH ROCKER BEARING DATA

Pier No.	Bearing	Temp. (° F)	Tilt Angle (Degrees)	Tilt Direction	Rocker Displacement (Inch)	Rocker Displacement Direction	"X" Dimension (min. dist. between girders)	Photo No.
1	B3	6	7.2	Contracted	None		15.375	79
2	B2	20	6.6	Contracted	None		15.5	80
3	B1	14	7.2	Contracted	None		13.875	81
6	B1	40	Not Taken		0.88	End	Not Taken	82
6	B2	40	Not Taken		0.25	Right	Not Taken	
6	B3	40	5.5	Contracted	0.38	Left	13	83
6	B4	40	Not Taken		0.75	End	Not Taken	
7	B4	40	8.3	Contracted	None		10.25	84
8	B4	37	Not Taken		0.75	End	Not Taken	85
9	B1	39	Not Taken		0.63	End	Not Taken	
9	B2	39	Not Taken		0.50	End	Not Taken	
9	B4	39	6.1	Contracted	None		8.5	
10	B1	35	Not Taken		0.75	End	Not Taken	86
10	B2	35	Not Taken		0.50	End	Not Taken	
10	B3	35	Not Taken		0.25	End	Not Taken	
10	B4	35	Not Taken		0.19	End	Not Taken	
11	B1	35	10.5	Contracted	None		9.75	87
14	B4	35	5.5	Extended	1	End	7.375	88

The bearing with the worst tilt condition was at Pier 11 expansion bearing B1. The linear regression of the historical readings taken at this bearing is shown on Figure 1. The allowable angle of tilt is 13.75° given the rocker should bear on the masonry plate within the middle 50% of the arch of the rocker. Figure 1 indicates that the tilt would exceed the maximum allowable tilt of the rocker at approximately -5° F. This is a serious condition and warrants further investigation and analysis.

REMARKS

Figure 1 - Bearing Tilt - Pier 11 Bearing G1

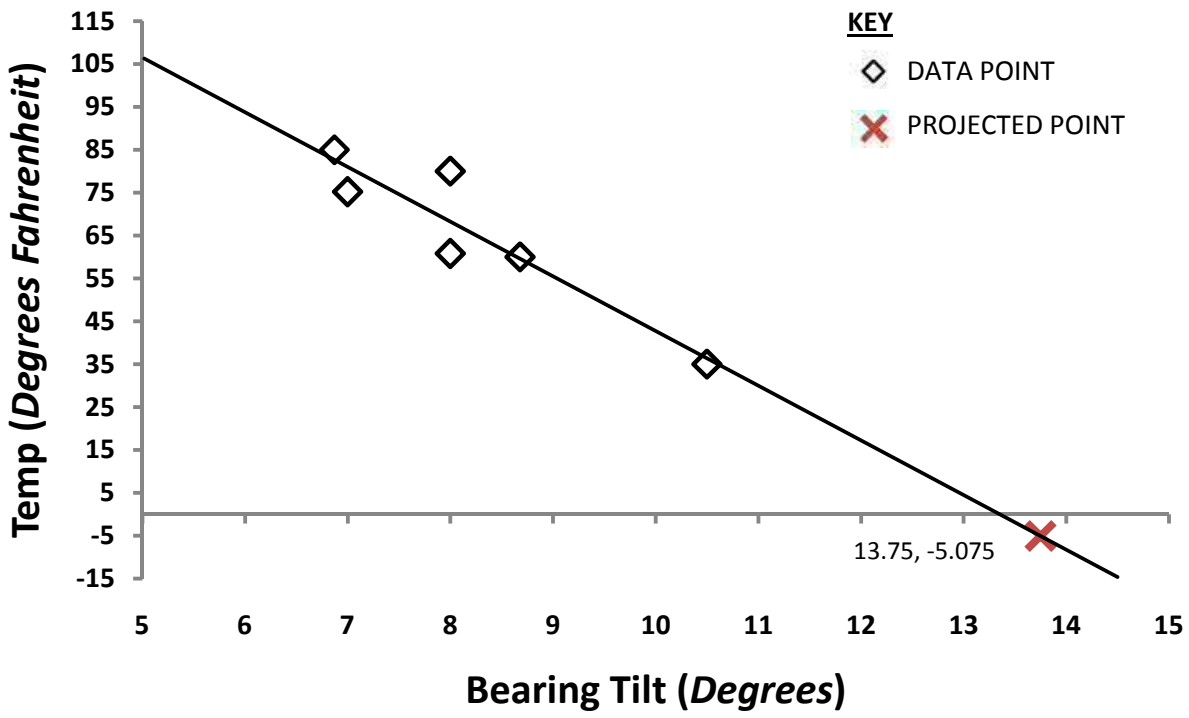

The pier 14 expansion bearings B1 and B4 were extended at 35° F which is an abnormal condition (Photos 89 & 88). The interior bearings B2 and B3 were in a neutral position at 35° F. Additionally, the rocker at bearing B4 is displaced endward by 1 inch indicating the bearing is frozen and the rocker is "walking" during contraction rather than rotating or rocking. Several other rockers were displaced less severely throughout the bridge. Displacement measurements were recorded at Piers 6, 8, 9, 10, and 14.

Additionally, at the pier 14 fixed bearing B1, there is heavy corrosion on the outside of the end left side wing plate (Photo 90). Section loss measurements taken by caliper indicated 60% section loss along a band of corrosion 2 inches above the masonry plate. There was no warping, crushing or other distortion of the wing plate evident.

The bearings at pier 4 and pier 5 are multi-rotational disk bearing type. No splitting, tearing, or abnormal bulges of the disks were observed. The expansion bearings have polytetrafluoroethylene (PTFE) sliders with polished stainless steel plate surfaces. All of the bearings were in a normally contracted position at 40° F. At pier 5, the stainless steel plates were slightly clouded and streaked with a thin film of dirt on the plates visible where the bearing had contracted (Photos 91 & 92).

Pier – Pedestals:
The pedestals had locations of cracked, hollow, and spalled concrete as illustrated on the Pier Deterioration Sketches. Significant areas are noted below:

Pier 1 pedestal P1 – cracked along the top left side and spalled 6 inches high x 2 feet long x 2 inches deep with exposed reinforcement that is mostly bonded (Photo 93).
Pier 1 pedestal P2 – begin right face and corner cracked with 2 square foot area of hollowness (Photo 94).
Pier 1 pedestal P3 – begin right face 3 square foot area of hollowness (Photo 95).
Pier 3 pedestal P1 – begin left face cracked with 2 square foot area of hollowness; and an 18 inches wide

REMARKS

x 6 inches high x 1.5 inches deep spall with staining and exposed reinforcement (Photo 96).

- Pier 3 pedestal P2 – top of the begin face has 2 square foot area of hollowness (Photo 97); and 4 square foot of hollowness at the end face (Photo 98).
- Pier 3 pedestal P3 – right side cracked (Photo 99).
- Pier 3 pedestal P4 – left side cracked (Photo 100); and the top of the begin face is spalled 32 inches wide x 18 inches high x up to 3 inches deep to the begin right corner of the bearing B4 masonry plate (Photo 101). There is exposed rusted reinforcement that is mostly bonded. The concrete beneath the bearing plate is sound.
- Pier 7 pedestal P1 – top left edge is cracked with 2 square foot of hollowness (Photo 102).
- Pier 7 pedestal P4 – top ½ of the begin face is cracked with 4 square foot of hollowness (Photo 103).
- Pier 9 pedestal P3 – begin face at top has 16" long x 6" high hollow area with a 13" long x 5" high x 2" deep spall (Photo 104). The spall has no exposed rebar and does not undermine the bearing masonry plate.
- Pier 11 pedestal P1 – all four sides are cracked; and there is 1.5 square foot of hollowness on the begin face and 0.5 square foot of hollowness on the end face (Photo 105).
- Pier 12 pedestal P1 – the end left is cracked 3 inches to 4 inches below the top edge.
- Pier 13 pedestal P1 – begin left top edge is spalled 2 feet wide x 6 inches high x 4 inches deep with rusted reinforcement; and the left side is cracked with 3 square foot of hollowness (Photo 106).
- Pier 14 pedestal P1 – the left side and left half of the top are cracked (Photo 107).

Pier – Cap Beam:
The pier cap beam had locations of cracked, hollow, and spalled concrete as illustrated on the Pier Deterioration Sketches. Significant areas are noted below:

- Pier 2 pedestal bay 1 – begin bottom corner spalled 6' long x 8" deep with exposed rebar (Photo 108); end bottom corner spalled 7' long x 5" deep with exposed rebar (Photo109); bottom face hollow for 22 square feet.
- Pier 3 pedestal bay 2 – cracked and hollow sounding over the begin 1/3 and end 1/3 of the bay (Photo 110).
- Pier 3 column bay 1 – cracked throughout and hollow sounding over 31 square foot of the bottom surface (Photo 111).
- Pier 9 underside 6' to right of column 2 – 2 square foot hollow area with (2) 1/2" deep spalls measuring 15" x 6" and 5" x 10" (Photo 112). No rebar exposed.
- Pier 11 right side – vertical cracks and 4.5 square foot of hollowness (Photo 113).
- Pier 11 left side – vertical cracks and mapcracking of a patched area (Photo 114).
- Pier 14 left side – vertical cracks and 7.5 square foot of hollowness (Photo 115).

Pier – Stem:
There are crash walls at piers 2, 3, & 4. The pier stems at these piers had locations of cracked, hollow, and spalled concrete as illustrated on the Pier Deterioration Sketches. The begin face of pier 4 is in the worst condition of the three with large hollow areas totaling 30 square feet (Photo 116) and a 3 feet wide x 1.5 feet high x 1.5 inch deep spall near Column 2 at the top with exposed rebar (Photo 117).

Pier – Columns:
The pier cap beam had locations of cracked and hollow concrete as illustrated on the Pier Deterioration Sketches. Significant areas are noted below:

- Pier 1 column C2 – the begin face has vertical cracks and 6.5 square foot of hollowness (Photo 118).
- Pier 3 column C2 – the begin face has vertical cracks and 15.5 square foot of hollowness (Photo 119).
- Pier 4 column C2 – the begin face has 5.5 square foot of hollowness (Photo 120).
- Pier 11 column C3 - the begin and end right sides have vertical cracks and 28 square foot of hollowness (Photo 113).
- Pier 14 column C3 – the right side has vertical cracks and 2 square foot of hollowness (Photo 115).

REMARKS

Pier – General Concrete Condition:
There is scattered cracking with locations of hollow areas and spalled concrete throughout as illustrated in the Pier Deterioration Sketches. The total hollow and spalled area; and percent of deteriorated pier concrete surfaces are noted in the table below:

PIER CONCRETE DETERIORATION QUANTITIES		
Pier No.	Deteriorated Area (square foot)	Percent of Deteriorated Area
1	27.1	2.3
2	98.8	5.4
3	119.5	6.3
4	74.1	3.7
5	10.2	0.6
6	22.3	1.4
7	30.1	2.2
8	7.2	0.5
9	34.0	2.4
10	27.5	2.1
11	48.1	4.25
12	27.7	2.7
13	47.5	5.2
14	20.8	2.6
Total	594.9	3.1

UTILITIES ITEMS
Lighting:
None.

Sign Structure:
None.

Utilities and Support:
None visible.

SPECIAL EMPHASIS ITEMS
Special Emphasis Inspection Required
- Non-Redundant/Fracture Critical Members – No
- Pin and Hangers – No
- Fatigue-Prone Welds – Yes
- Non-Categorized Fatigue-Prone Details – No
- Other – Yes

Special Emphasis Details
- Category 'D' welds at the ends 1'-0" radius at horizontal bracing gusset plates attached to bottom (tension) flanges of all girders in Spans 2 through 6 and in Span 10.
- High rocker bearings at the begin abutment and at piers 1 thru 3 and 6 thru 14.

PLANS & SKETCHES

F.I.S.H. 70-7

FED. RD. REG. NO.	STATE	FEDERAL AID PROJECT NO.	SHEET NO.	TOTAL SHEETS
1	NEW YORK	I-890-3(28) I-481-2(118)	179	302

INTERSTATE ROUTE CONNECTION 570
BUTTERNUT INTERCHANGE (PHASE 2)
ONONDAGA COUNTY

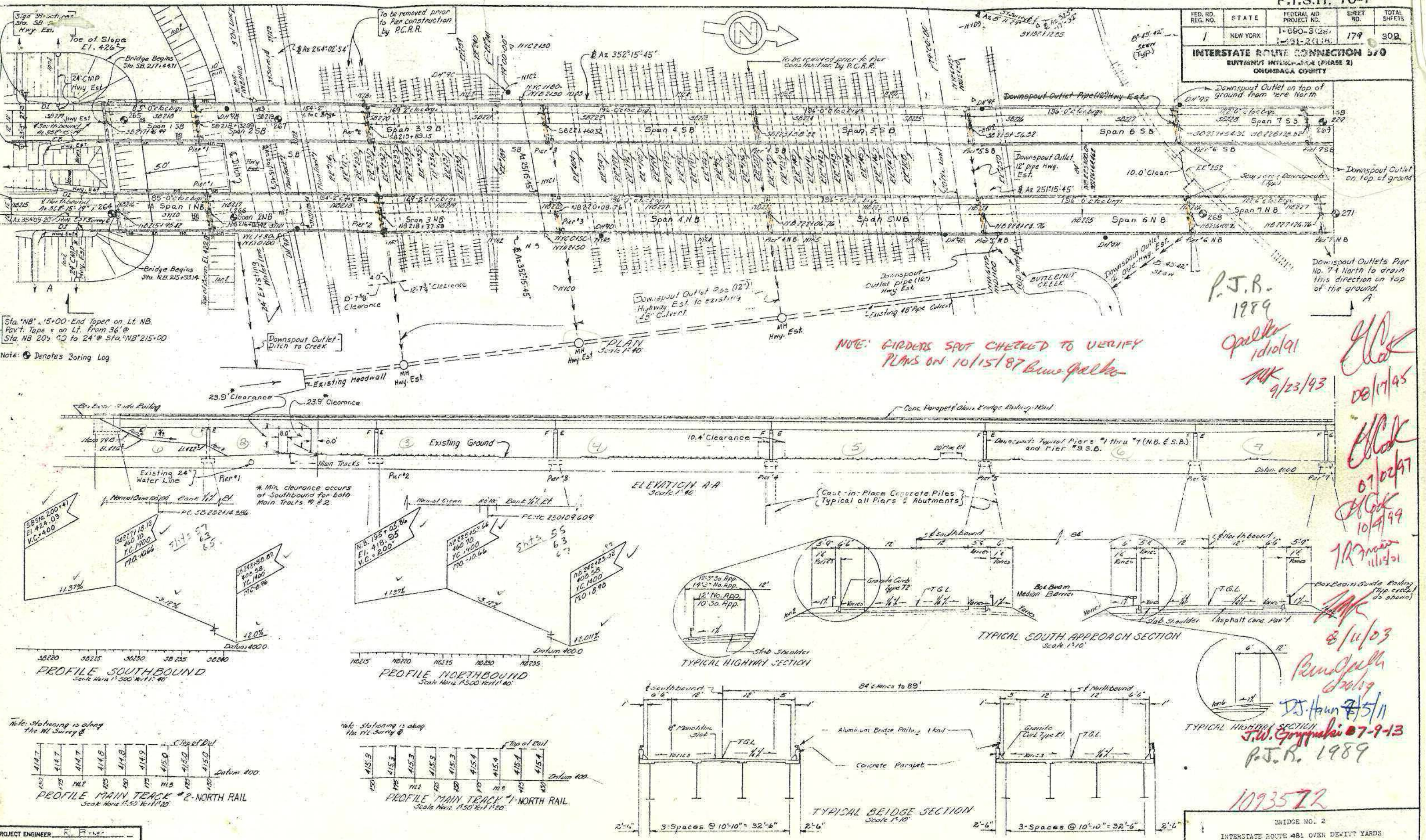

PROJECT ENGINEER R. Parker
IN CHARGE OF F. Eckel
DESIGNED BY
DESIGN CHECKED BY
DETAILED BY H.F. Ratta
DETAIL CHECKED BY A.E. Reinhardt

BRIDGE NO. 2
INTERSTATE ROUTE 481 OVER DEWITT YARDS

LAYOUT

DRAWING NO. 1 OF 50

F.I.S.H. 70-7

FED. RD. REG. NO.	STATE	FEDERAL AID PROJECT NO.	SHEET NO.	TOTAL SHEETS
1	NEW YORK	I-690-3(23) I-481-2(116)	183	209

INTERSTATE ROUTE CONNECTION 570
BUTTERNUT INTERCHANGE (PHASE 2)
ONONDAGA COUNTY

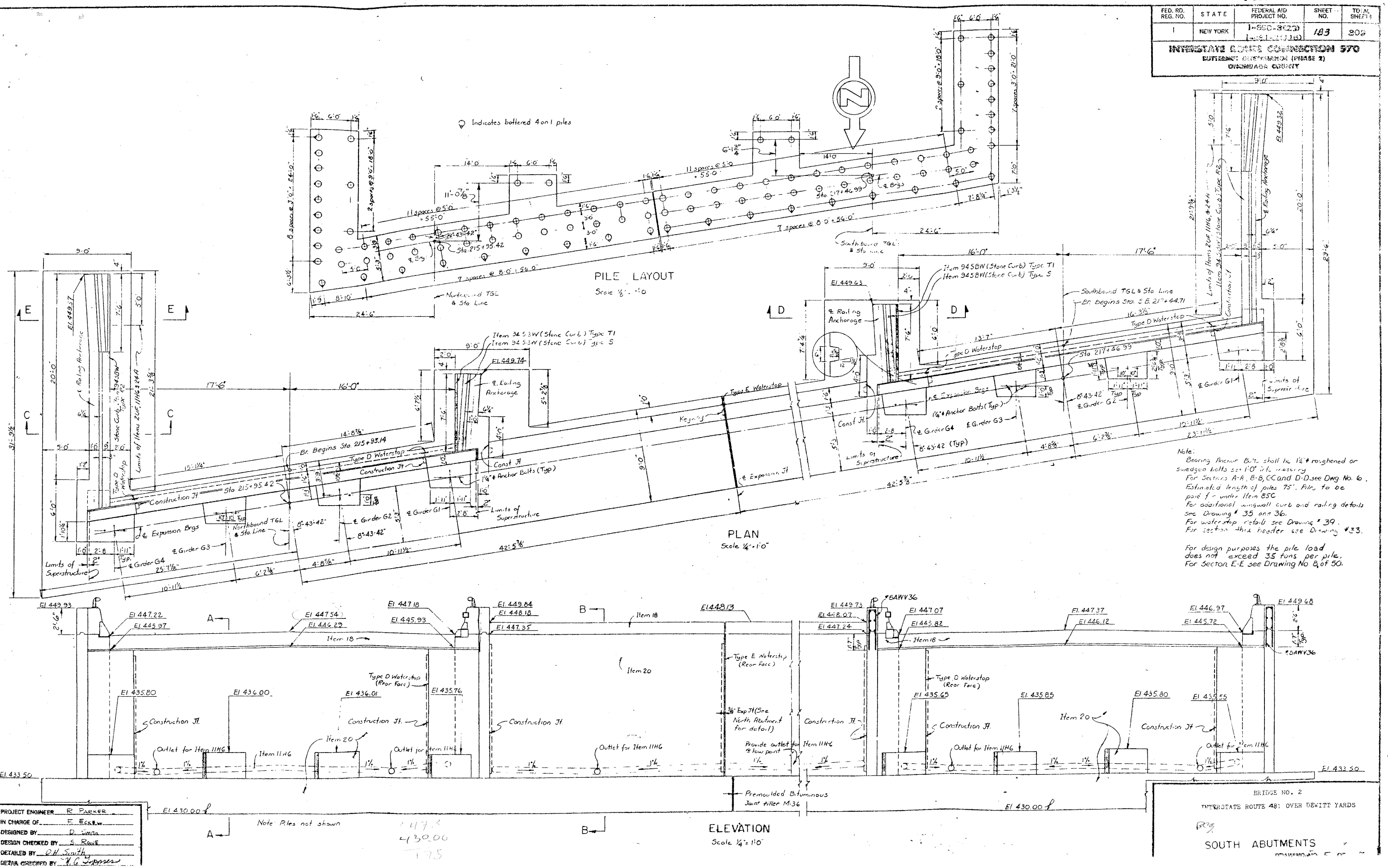

PROJECT ENGINEER R. PARKER
IN CHARGE OF F. ECKER
DESIGNED BY D. SMITH
DESIGN CHECKED BY S. ROWE
DETAILED BY O.H. Smith
DETAIL CHECKED BY W.G. Tyrrell

BRIDGE NO. 2
INTERSTATE ROUTE 481 OVER DEWITT YARDS

SOUTH ABUTMENTS

FED. RD. REG. NO.	STATE	FEDERAL AID PROJECT NO.	SHEET NO.	TOTAL SHEETS
1	NEW YORK	I-690-3(28) I-481-2(116)	184	309

INTERSTATE ROUTE CONNECTION 570
EASTBOUND ENTRANCE (PHASE II)
ONONDAGA COUNTY

FOOTING REINFORCEMENT PLAN
Scale: 1/8" = 1'-0"

EXTERIOR SIDEWALK OVERLAY
Scale: 1/4" = 1'-0"

MALL WALL OVERLAY
Scale: 1/4" = 1'-0"

EXTERIOR SIDEWALK OVERLAY
Scale 1/4" = 1'-0"

REINFORCEMENT PLAN 1'-0" ABOVE FOOTING
Scale: 1/8" = 1'-0"

WEST INTERIOR SIDEWALK OVERLAY
Scale: 1/4" = 1'-0"
East Overlay Similar

TYPICAL BACKWALL HEADER
Scale 1/4" = 1'-0"

SECTION A-A
Scale 3/8" = 1'-0"

SECTION B-B
Scale 3/8" = 1'-0"

SECTION C-C
Scale 3/8" = 1'-0"

SECTION D-D
Scale 3/8" = 1'-0"
Section E-E Similar except for no. & piles

Chamfer all exposed construction joints and all exposed corners one inch.

DETAIL A
Scale: 3/4" = 1'-0"

Notes: All footing reinforcement shall have a min. cover of 3" unless shown otherwise.
All other reinforcement shall have a min. cover of 2" unless shown otherwise.

BRIDGE NO. 2
INTERSTATE ROUTE 481 OVER DEWITT YARDS
SOUTH ABUTMENT DETAILS
DRAWING NO. 6 OF 50

PROJECT ENGINEER R. L. Parker
IN CHARGE OF F. Eckel
DESIGNED BY D. H. Smith
DESIGN CHECKED BY F. W. Eckel
DETAILED BY J. F. Darcy
DETAILS CHECKED BY [illegible]

F.I.S.H. 70-7

FED. RD. REG. NO.	STATE	FEDERAL AID PROJECT NO.	SHEET NO.	TOTAL SHEETS
1	NEW YORK	I-690-3(28) I-481-2(11)b	185	309

INTERSTATE ROUTE CONNECTION 570
BUTTERNUT INTERCHANGE (PHASE 2)
ONONDAGA COUNTY

Piles to be Cast-in-Place Concrete Piles, Item 85C
Estimated length of pile = 65 feet
For design purposes the pile load does not exceed 35 tons per pile.

Indicates Piles battered 4 on 1.

PILE LAYOUT
Scale : 1/8" = 1'-0"

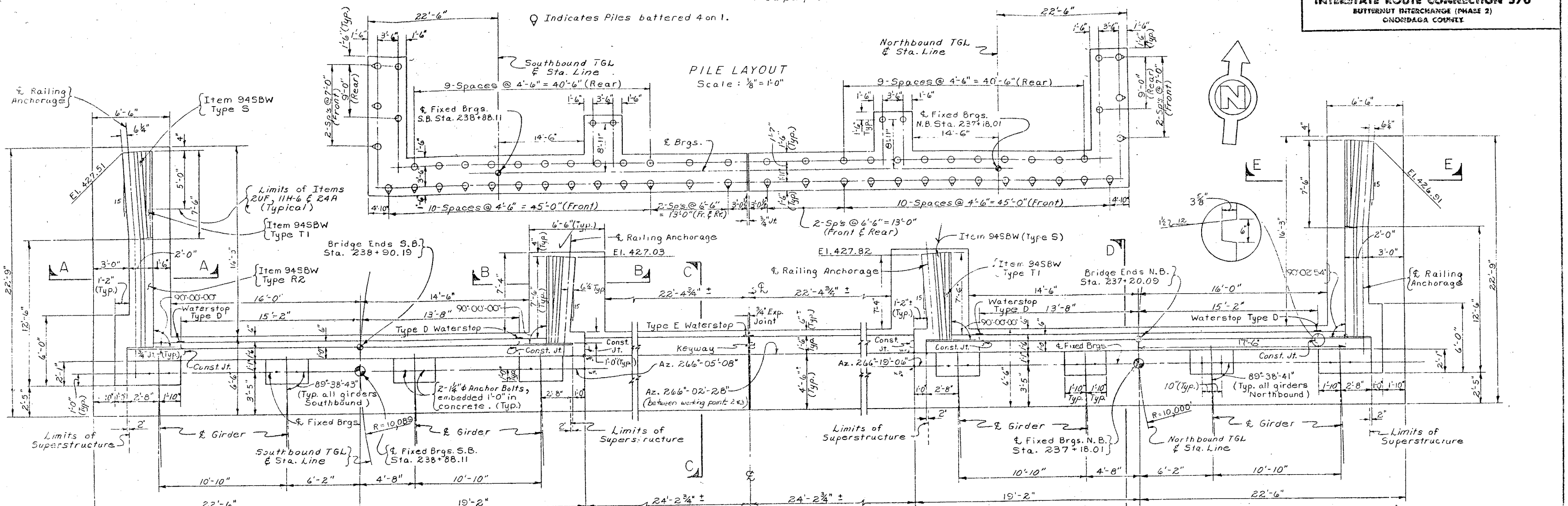

PLAN
Scale : 1/4" = 1'-0"

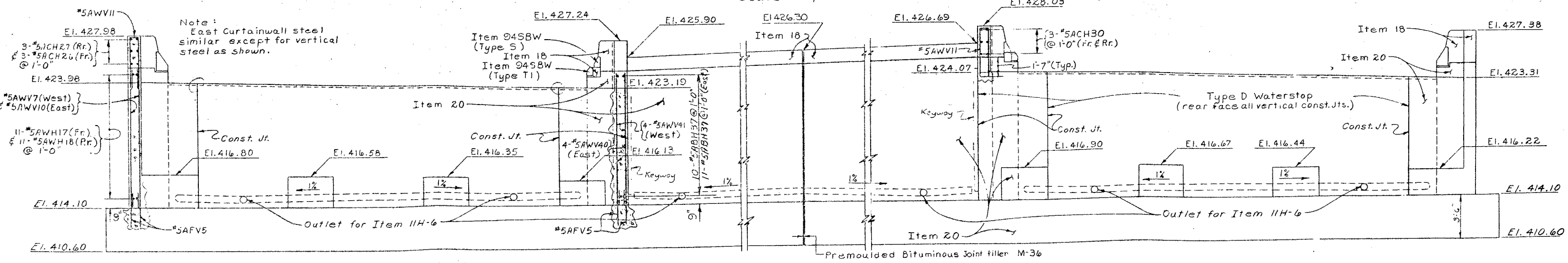

ELEVATION
Scale : 1/4" = 1'-0"

Note : Piles not shown in Elevation. Omit perforations in Item 11H-6 extension thru wall.

Note : Northwest overlays shown, Northeast similar by opposite hand.

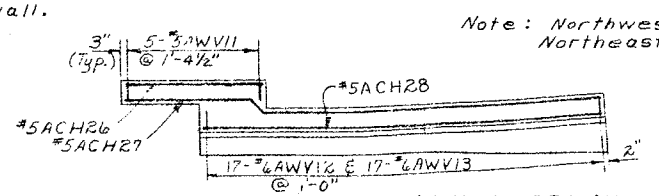

EXTERIOR SIDEWALK OVERLAY
Scale : 1/4" = 1'-0"

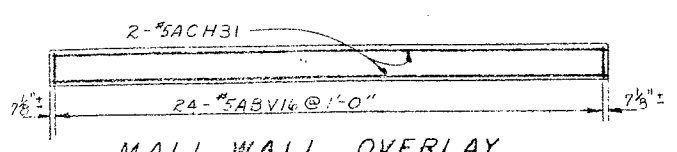

MALL WALL OVERLAY
Scale : 1/4" = 1'-0"

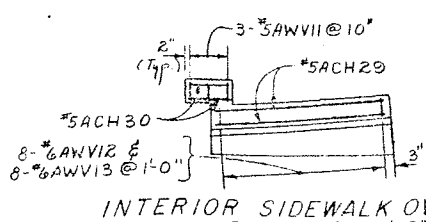

INTERIOR SIDEWALK OVERLAY
Scale : 1/4" = 1'-0"

PROJECT ENGINEER	R. Parker
IN CHARGE OF	E. Eckel
DESIGNED BY	K. P. W. & Kaul
DESIGN CHECKED BY	J. D. Sherman
DETAILED BY	J. C. Thompson
DETAIL CHECKED BY	D. H. South

BRIDGE NO. 2
INTERSTATE ROUTE 481 OVER DEWITT YARDS

NORTH ABUTMENTS

DRAWING NO. 7 OF 50

F.I.S.H. 70-7

FED. RD. REG. NO.	STATE	FEDERAL AID PROJECT NO.	SHEET NO.	TOTAL SHEETS
1	NEW YORK	I-690-3(28) I-481-2(16)	186	307

INTERSTATE ROUTE CONNECTION 370
DEWITT INTERCHANGE (PHASE 2)
ONONDAGA COUNTY

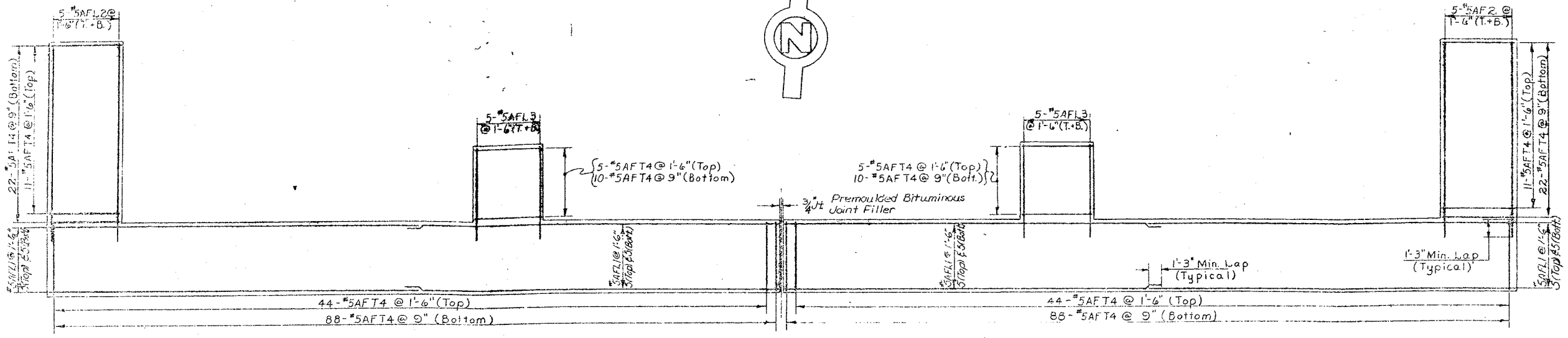

FOOTING REINFORCEMENT PLAN
Scale : 3/16" = 1'-0"

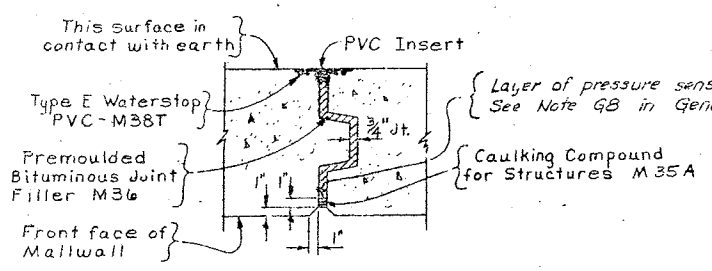

EXPANSION JOINT DETAIL
Scale : 1" = 1'-0"

REINFORCEMENT PLAN 1'-0" ABOVE FOOTING
Scale : 1/4" = 1'-0"

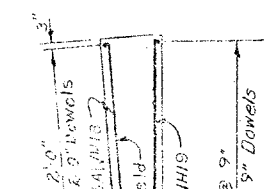

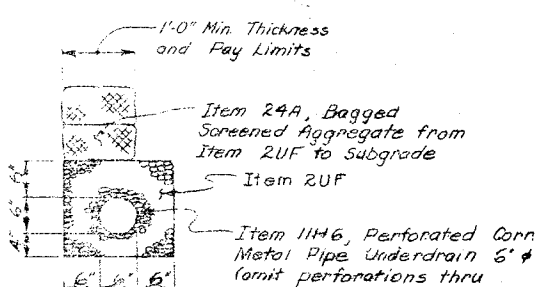

DETAIL "A"
Scale : 3/4" = 1'-0"

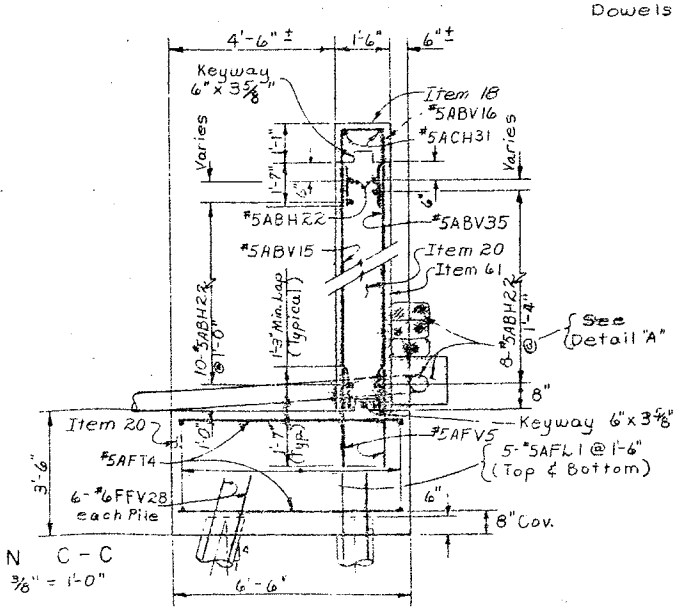

SECTION C-C
Scale : 3/8" = 1'-0"

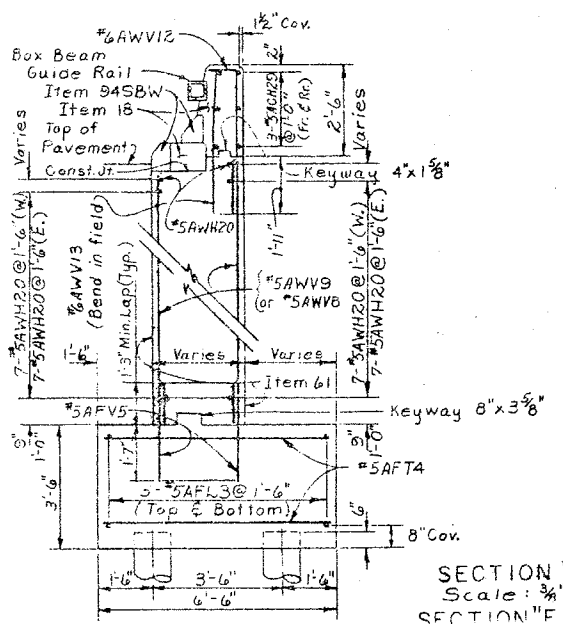

SECTION "B-B"
Scale : 3/8" = 1'-0"

SECTION "F-F" (Similar except for Pile No's and Piles)

Notes:-

See Drawing # 39 for Waterstops.

All footing reinforcement shall have a min. cover of 3" unless otherwise noted.

All other reinforcement shall have a min. cover of 2" unless otherwise noted

All exposed construction joints shall be chamfered one inch

All exposed corners shall be chamfered one inch.

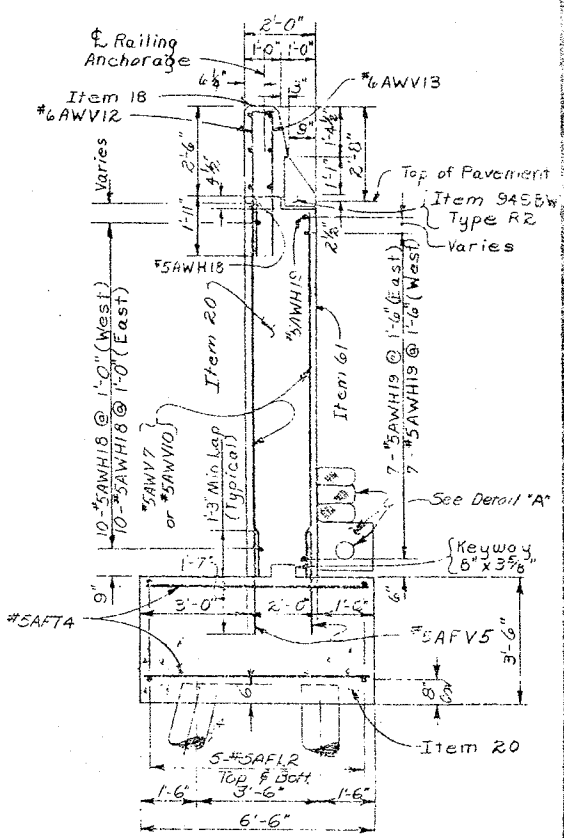

SECTION "A-A"
Scale : 3/8" = 1'-0"

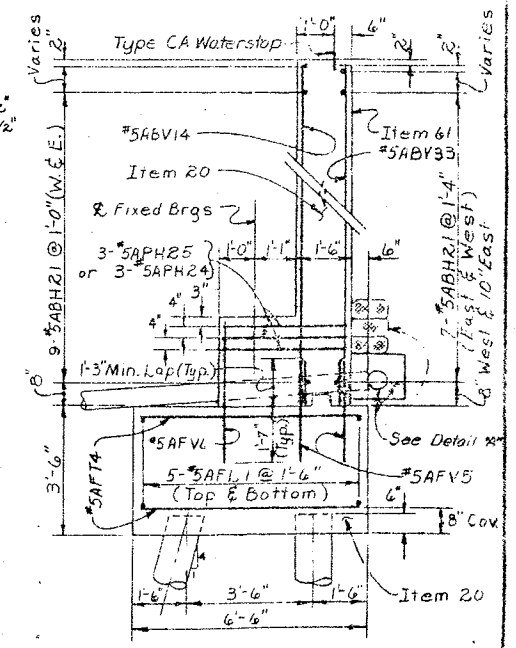

SECTION D-D
Scale : 3/8" = 1'-0"

PROJECT ENGINEER	A. Parker
IN CHARGE OF	T. Ek. Ke'
DESIGNED BY	K. wachter
DESIGN CHECKED BY	V. Pao & H. Sherman
DETAILED BY	J. Durrant & J. C. G.
DETAILS CHECKED BY	C. H. Smith

BRIDGE NO. 2
INTERSTATE ROUTE 481 OVER DEWITT YARDS

NORTH ABUTMENT DETAILS

DRAWING NO. 8 OF 5

F.I.S.H. 70-7

FED. RD. REG. NO.	STATE	FEDERAL AID PROJECT NO.	SHEET NO.	TOTAL SHEETS
1	NEW YORK	~~I-490-8(25)~~ I-481-2(116)	187	309

INTERSTATE ROUTE CONSTRUCTION 570
DEWITT INTERCHANGE (PHASE 2)
ONONDAGA COUNTY

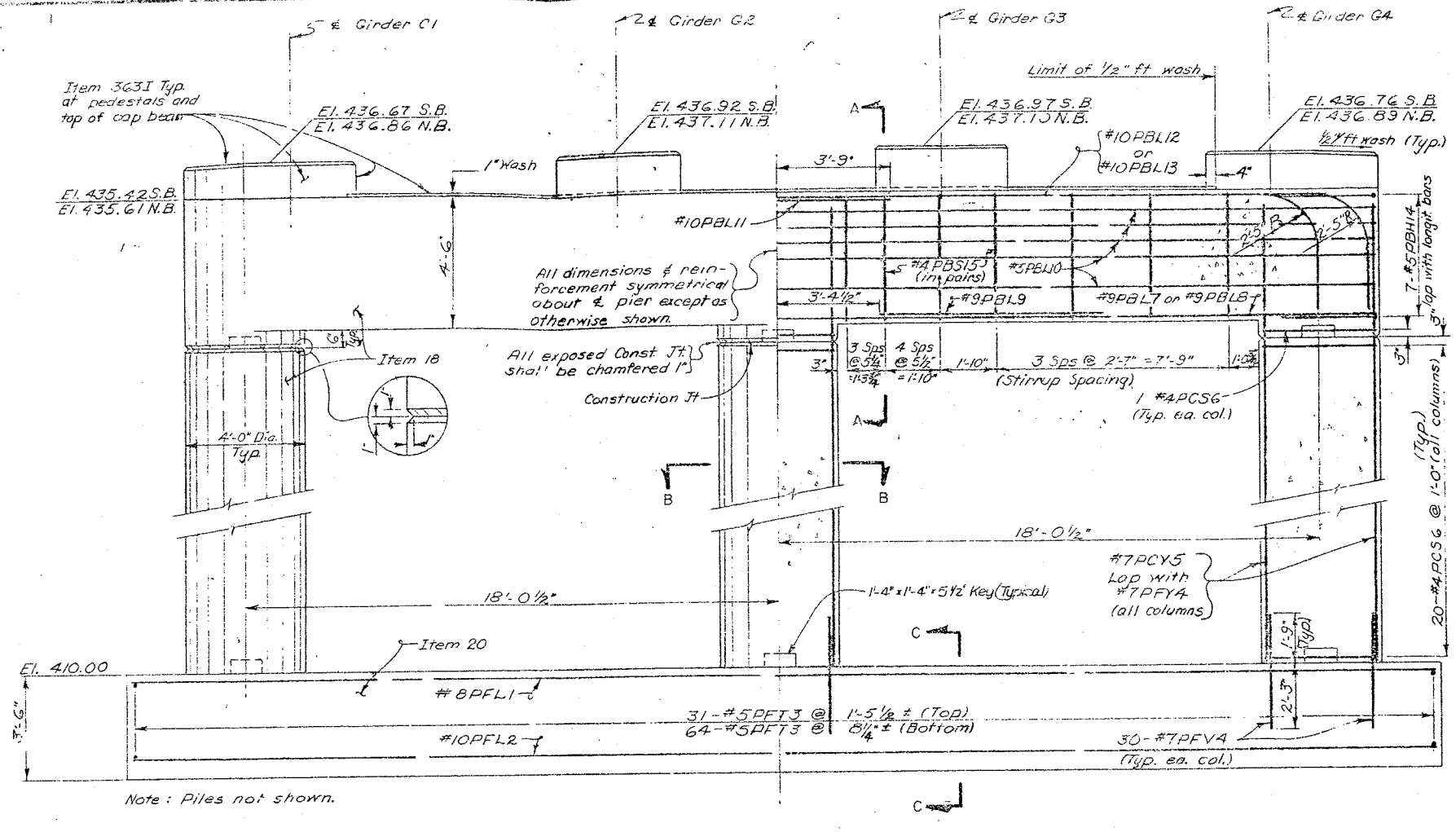

ELEVATION
Scale: ⅜"=1'-0"

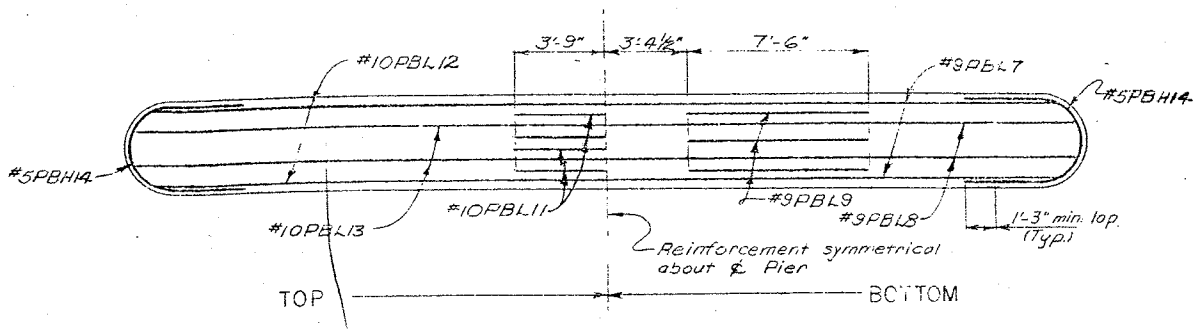

PIER CAP REINFORCEMENT
Scale: ¼"=1'-0"

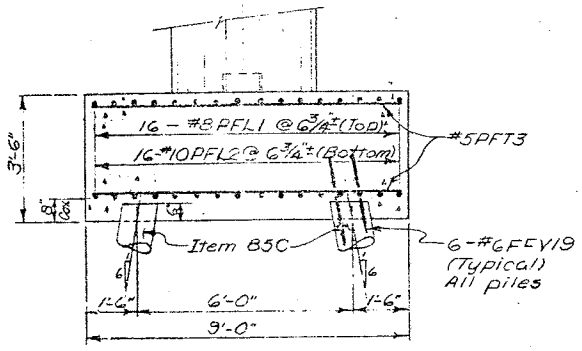

SECTION C-C
Scale: ⅜"=1'-0"

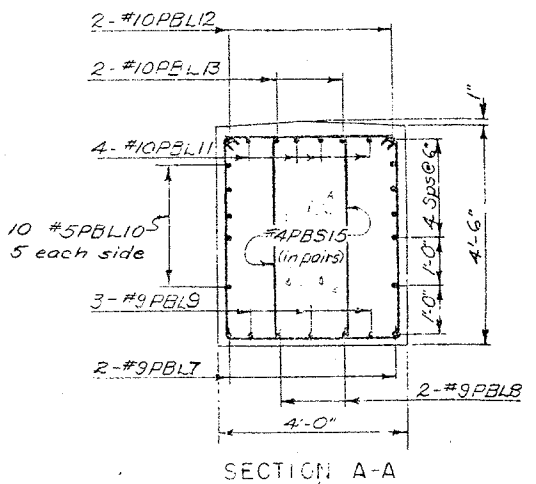

SECTION A-A
Scale: ½"=1'-0"

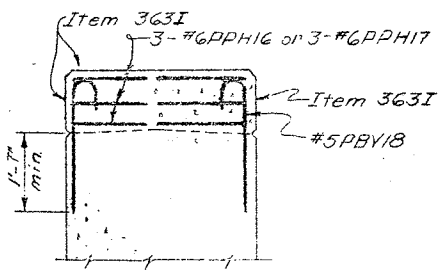

SECTION D-D
Scale: ½"=1'-0"

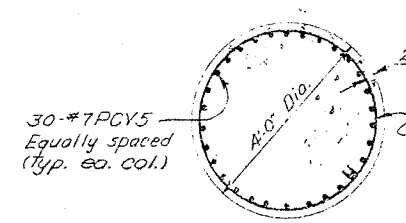

SECTION B-B
Scale: ½"=1'-0"

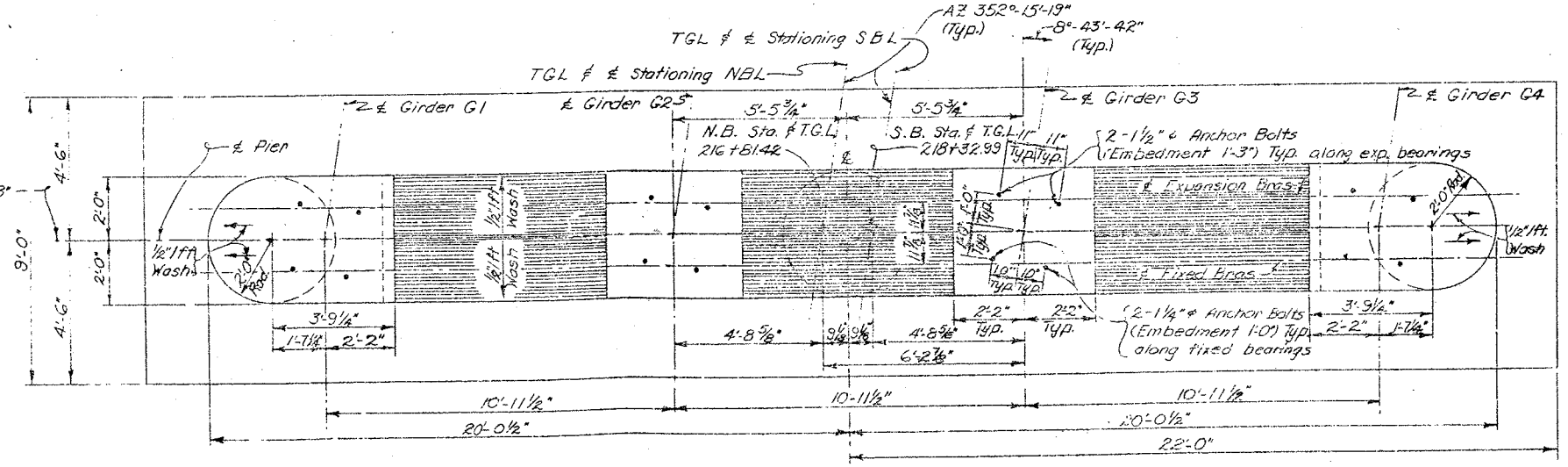

PLAN
Scale: 3/32"=1'-0"

Indicates battered piles (6 on 1)

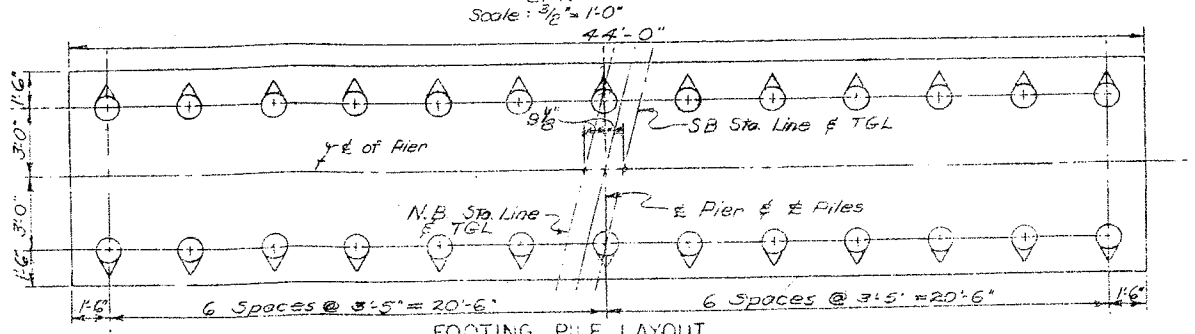

FOOTING PILE LAYOUT

Note: Bar reinforcement not shown.

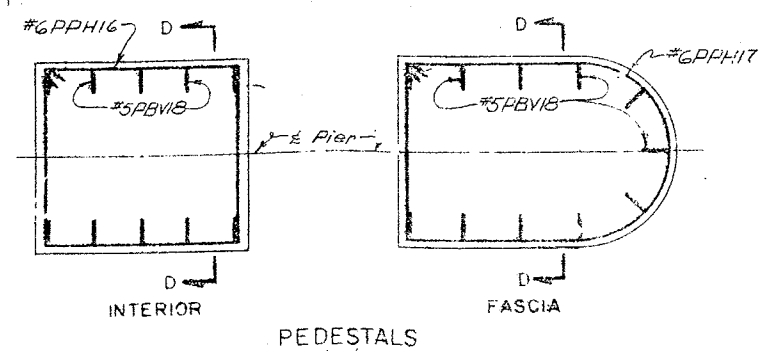

PEDESTALS
Scale: ½"=1'-0"

Notes:
All footing reinforcement shall have a min. cover of 3" unless otherwise shown.
All other reinforcement shall have a min. cover of 2" unless otherwise shown.
Estimated length of cast-in-place concrete piles = 55' South bound and 60' North bound.
For design purposes the pile load does not exceed 35 tons per pile.
For details of pile reinforcement see Drawing No. 42

PROJECT ENGINEER	R. L. Parker
IN CHARGE OF	F. Eckel
DESIGNED BY	N. A. Tosches
DESIGN CHECKED BY	R. Thimble
DETAILED BY	Wm. Durant
DETAIL CHECKED BY	W. G. Stevens

BRIDGE NO. 2
INTERSTATE ROUTE 481 OVER DEWITT YARDS

PIER I (NB & SB)

DRAWING NO. 3

F.I.S.H. 70-7

FED. RD. REG. NO.	STATE	FEDERAL AID PROJECT NO.	SHEET NO.	TOTAL SHEETS
1	NEW YORK	I-390-8(28) I-481-2(116)	188	309

INTERSTATE ROUTE CONNECTION 370
DEWITT INTERCHANGE (PHASE 2)
ONONDAGA COUNTY

ELEVATION
Scale 3/16" = 1'-0"

Note: Piles not shown
Downspouts not shown

Elevation E
Item 363I Typ at pedestals & top of beam.
#11PBL12
#11PBL11
#5PBS32
#11PBL14
#11PBL15 or #11PBL16
3 spaces @ 2'-10" = 8'-6"
4 spaces @ 2½" = 1'-0"
3 spaces @ 3'-3⅜" = 9'-9⅛"
1'-4 PCS9
#4 PCS9 @ 1'-0" Table for no reg'd
#8 PCV6 lap #8 PFV4 (All columns)
Dimension 'A' All columns
Dim. 'B' See Table for no reg'd
Elevation A
Elevation B
Elevation C
Elevation D
Elevation F
#5PBST24 @ 1'-6"
#11PBL10
#4PBL13
4'-7½"
Wash 1"
Elevation G
Item 18
Elevation H
½"H wash
All dimensions and reinforcement symmetrical about ℄ Pier
8'-10¼"
1524 m
Construction JH
Chamfer 1" all exposed construction joints
1'-4 x 1'-4 x 5½" Keyway (Top & Bot of all columns)
4'-0" Typ.
1" wash
18 - #5PST26 @ 1'-0"
18'-0½"
12 - #5PS17 @ 1'-6" (Both Faces) Lap with #5PFV5
Dim. #5PS17 Bot. Table for no reg'd (Both Faces)
1'-9" x 37'-5" x 5½" Keyway
Item 20
#5PFV5
#8PFV4
#8PFV6
29 - #5PFT2 @ 1'-6"
86 - #7PFT3 @ 6"
#5PFL1
4'-6"
2'-6"
1'-6"
3'-0"
2'-0"

Elevation F
#5PBST24 @ 1'-6"
#11PBL10
#4PBL13
4'-7½"
All dimensions and reinforcement symmetrical about ℄ Pier
8'-10¼"
℄ Girder G3
Item 18
A
Elevation G
Wash 1"
Elevation H
½"H wash
Elevation A
Elevation B
1524 m
Construction JH
Item 18
Chamfer 1" all exposed construction joints
1'-4 x 1'-4 x 5½" Keyway (Top & Bot of all columns)
4'-0" Typ.
B, C
1" wash
Item 18
El. 421.25
18 - #5PST26 @ 1'-0"
18'-0½"
12 - #5PS17 @ 1'-6" (Both Faces) Lap with #5PFV5
Dim. #5PS17 Bot. Table for no reg'd (Both Faces)
1'-9" x 37'-5" x 5½" Keyway
Item 20
#5PFV5
#8PFV6
29 - #5PFT2 @ 1'-6"
#5PFL1
4'-6"
2'-6"
1'-6"
3'-0"
2'-0"
C

℄ Girder G1
℄ Girder G2
℄ Girder G3
West of K-111 wash
℄ Girder G4
Az. 352°-15'-19"
TGL ℄ & Stations N&L
TGL ℄ & Stations S&L
All dimensions and reinforcement symmetrical about ℄ Pier.
℄ Girder G3
2-1½" ℄ Anchor Bolts (Typical) (Embedment 1'-3")
8'-55-4⅝" (Typ)
℄ Girder G4
Wash 1"
½"H wash
2'-0"
2'-0"
2'-0"
6'-0"
12'-0"
3'-10"
1'-6"
3'-0"
1'-6"
Station "A" S&L
Station "A" NBL
℄ Row of Battered Piles
℄ Pier
Az. 255°-3'-38"
℄ Row of Vertical Piles
℄ Row of Battered* Piles
2'-3"
2'-3"
5'-5⅝"
4'-8⅝"
6'-2⅞"
10'-11½"
3'-10½"
1'-7½"
1'-6"
6 Pile Spaces @ 3'-1" = 18'-6"±
1'-6"
21'-6"
43'-0"

FOOTING PILE LAYOUT
Scale 3/16" = 1'-0"

* Piles adjacent to Steel Sheet Piling shall not be battered.

PLAN
Scale 3/16" = 1'-0"

#4PBL13
#11PBL12
#5 PBL22
#11PBL11
#11PBL10
#11PBL14
#11PBL15
#11PBL16
#5PBL22 lap with longitudinal bars in both faces
Reinforcement symmetrical about ℄ Pier
TOP
BOTTOM

PIER CAP REINFORCEMENT
Scale 3/8" = 1'-0"

Battered Pile shown. Do not batter piles adjacent to Steel Sheet Piling, Item 83S

#8PSL25
#5PST26
4'-0"
#5PSV7
#5PBS(REV) 1'-0"
Lap
1'-3"
#5PFT2
1'-7"
#5PFV5
4'
9 - #5PFL1 @ 1'-3" (Top)
10 - #5PFL1 @ 1'-3¼" (Bot.)
#7PFT3
Item 85C
1'-6"
3'-0"
3'-0"
3'-0"
1'-6"
12'-0"
#6 FFV23 For details of pile reinforcement see Drawing No 42

SECTION C C
Scale 3/8" = 1'-0"

2 - #11 PBL 12
2 - #11 PBL 11
7 - #11 PBL 10 9'-2" long
Chamfer all exposed corners 1" Typ.
#5PBT24
4 - #4 PBL 13 9'-2" long
#5PBL20 Both Faces
#5 PBS32 (in pairs)
3 spaces @ 0'-10"
2 spaces @ 1'-0"
4'-6"
4 - #11 PBL 14 8'-1" long
2 - #11 PBL 15
2 - #11 PBL 16
4'-0"

SECTION A-A
Scale 3/16" = 1'-0"

30 - #8 PCV6
#4 PCS9
2" Cov.
4'-0" Dia
Item 363I
3 - #6 PPH18 or 3 - #6 PPH19
#5 PBV17
1'-7" min

SECTION D-D
Scale ½" = 1'-0"

SECTION B-B
Scale 3/4" = 1'-0"

Note All footing reinforcement shall have a min. cover of 3" unless otherwise shown.
All other reinforcement shall have a min cover of 2" unless otherwise shown.
Estimated length of cast-in-place concrete piles: Pier #2 SB 55' long, Pier #2 NB & Pier #3 SB 60' long, Pier #3 NB 65' long, & Pier #4 NB & SB 70' long
For design purposes the pile load does not exceed 35 tons/pile.

Downspouts to be paid for under Item 13DE Each hopper to be drained by one downspout attached to each exterior column See drawing #32 for details

STATION "A"	NBL	SBL
PIER 2	218+37.59	219+89.15
PIER 3	220+08.76	221+60.32
PIER 4	222+06.76	223+58.32

PIER DATA

DESCRIPTION	NORTHBOUND			SOUTHBOUND		
	PIER 2	PIER 3	PIER 4	PIER 2	PIER 3	PIER 4
ELEVATION A	437.00'	438.00	438.50	437.00	438.00	438.50
" B	432.50'	433.50	434.00	432.50	433.50	434.00
" C	411.00	413.00	412.80	411.00	413.00	412.80
" D	407.50	409.50	409.30	407.50	409.50	409.30
" E	438.42	439.47	439.83	438.28	439.38	439.80
" F	438.66	439.70	440.09	438.52	439.61	440.05
" G	438.64	439.68	440.04	438.56	439.65	440.08
" H	438.43	439.46	439.79	438.35	439.43	439.83
DIM A	10.75"	11.75"	12.25"	10.75"	11.75"	12.25"
" B	6"	6"	1'-0"	6"	6	1'-0"
NO PCS9 Each Col.	12	13	13	12	13	13
DIM C	1'-0"	1'-0"	3"	1'-0"	1'-0"	3"
NO PSL8 Each Pier	20	14	18	20	16	18

For details of Steel Sheet Piling, Item 83S, see Drawing No 4.

3'-0" 43'-0" footing 3'-0"
℄ row of battered piles
Item 83TXS
3'-0"
12'-0" footing
3'-0"
Item 83TXS
℄ row of vertical piles

PIERS 3 SB & 3 NB

43'-0" footing
℄ row of vertical piles
Item 83S
11'-0" footing
Item 83S

PIERS 2 & 4 SB, 2 & 4 NB

#6 PPH18
#5 PBV17
℄ Pier
INTERIOR

#6 PPH19
#5 PBV17
D
D
FASCIA

PEDESTALS
Scale ½" = 1'-0"

PROJECT ENGINEER E. Palmer
IN CHARGE OF E. Blake
DESIGNED BY K. Kumar
DESIGN CHECKED BY N.L. Tobiasz
DETAILED BY D.M. Smith
DETAILS CHECKED BY C. Lindquist

BRIDGE NO. 2
INTERSTATE ROUTE 481 OVER DEWITT YARDS

PIERS #2, #3, #4 (NB & SB)
DRAWING NO. 10 OF 30

F.I.S.H. 70-7

FED. RD. DIST. NO.	STATE	FEDERAL AID PROJECT NO.	SHEET NO.	TOTAL SHEETS
	NEW YORK	I-88C-3(...) I-681-2(116)	189	302

INTERSTATE ROUTE CONNECTION 570
RUTTSHUT INTERCHANGE (PHASE 2)
ONONDAGA COUNTY

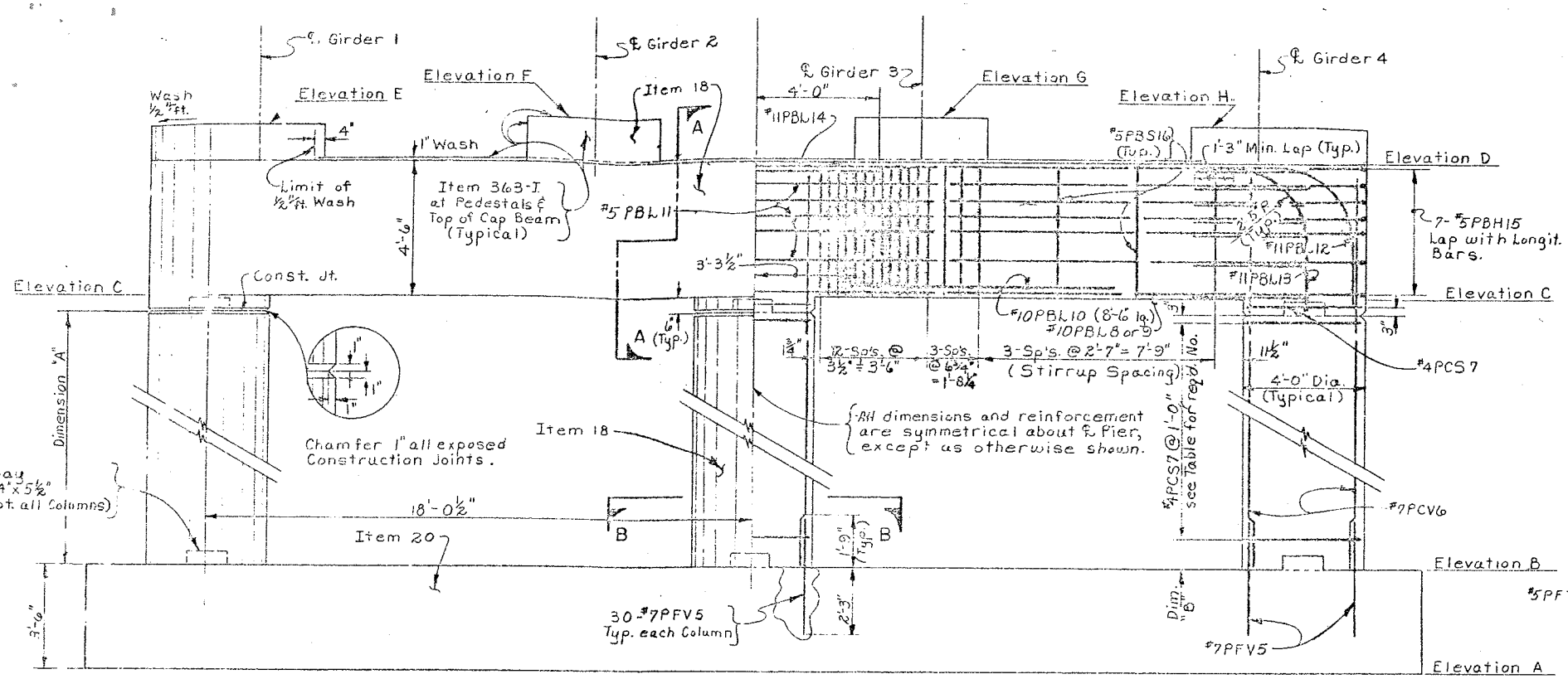

Notes:

Piles and Downspouts not shown.
Footing reinforcement not shown.

ELEVATION
Scale: ⅜"=1'-0"

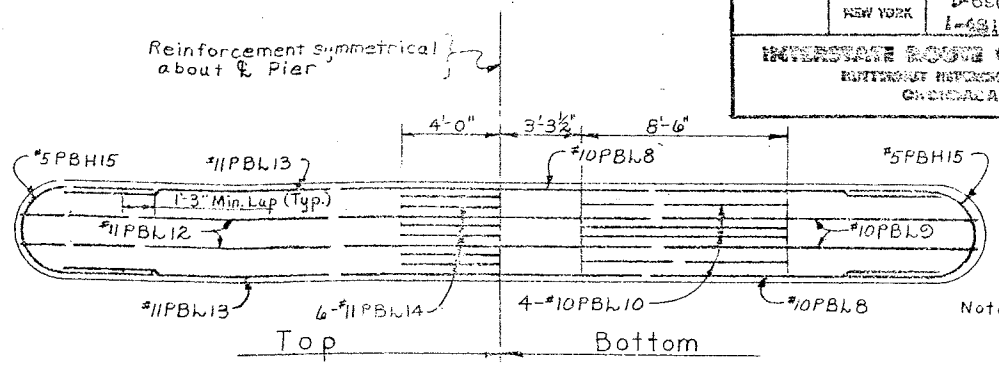

Note: #5PBS16 not shown.

PIER CAP REINFORCEMENT
Scale: ¼"=1'-0"

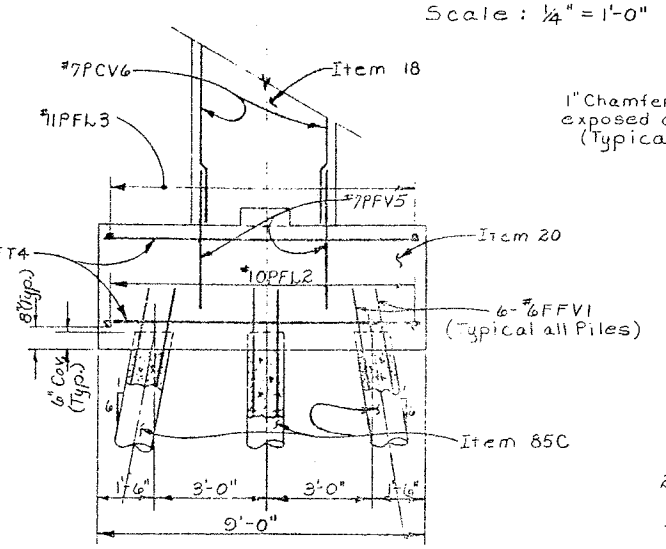

END SECTION
Scale: ⅜"=1'-0"

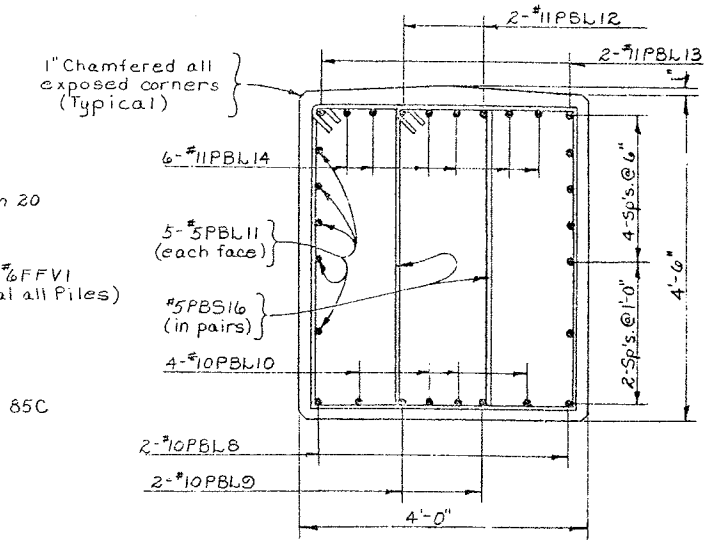

SECTION A-A
Scale: ¾"=1'-0"

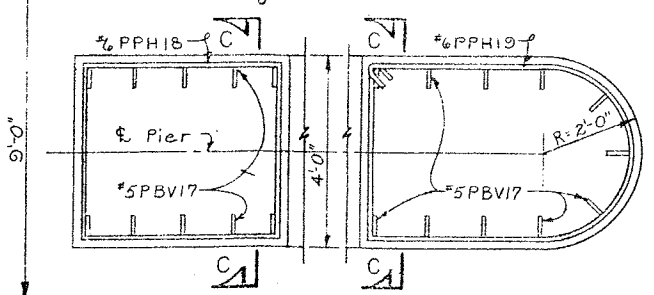

PEDESTAL REINFORCEMENT
Scale: ½"=1'-0"

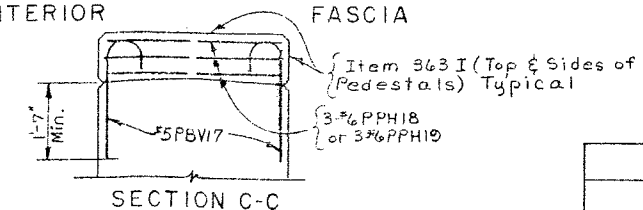

SECTION C-C

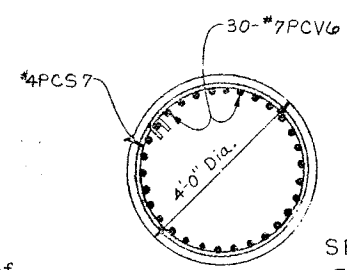

SECTION B-B
Scale: ½"=1'-0"

Notes:

All footing reinforcement shall have a minimum cover of 3" unless otherwise shown.

All other reinforcement shall have a minimum cover of 2" unless otherwise shown.

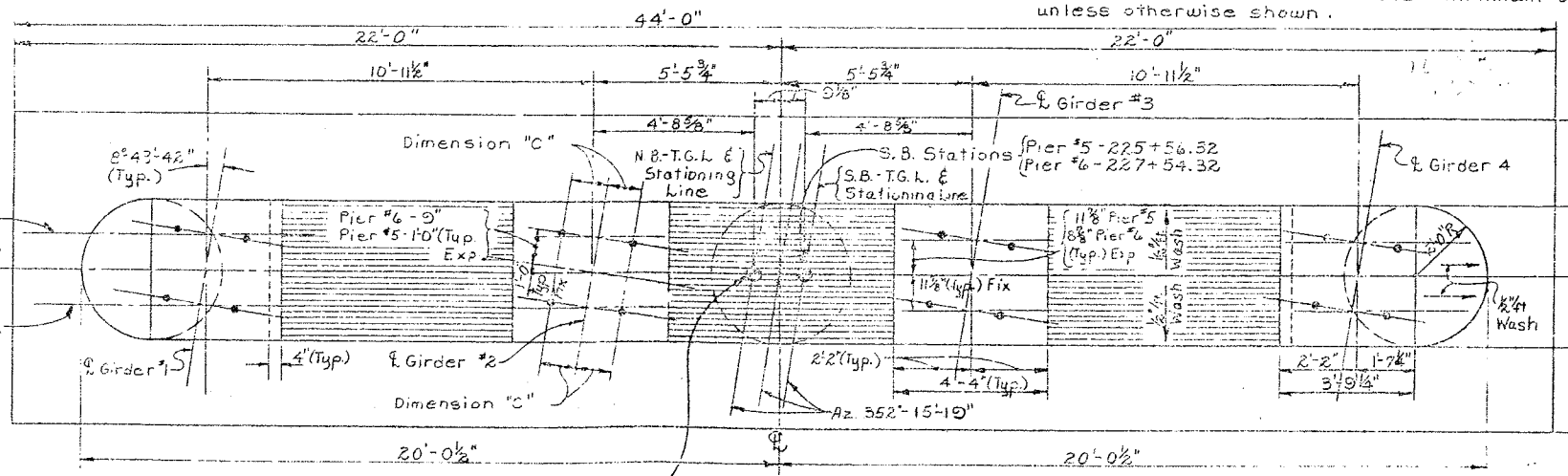

PLAN
Scale: ⅜"=1'-0"

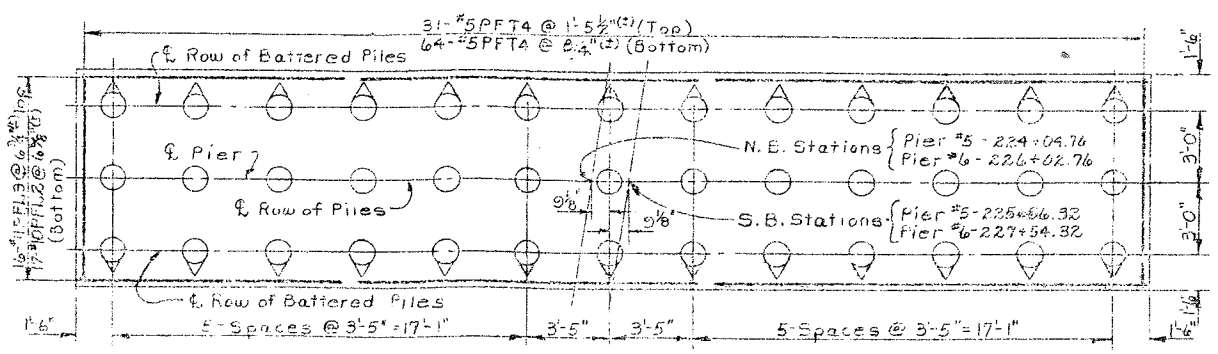

FOOTING REINFORCEMENT PLAN & PILE LAYOUT
Scale: ¼"=1'-0"

Note:

For Design Purposes the pile load does not exceed 85 Tons per Pile.

○ — Indicates Piles Battered 6 on 1

Estimated length of Cast-in-Place Piles:

Pier #5 S.B. = 75'
Pier #5 N.B. = 60'
Pier #6 S.B. = 80'
Pier #6 N.B. = 80'

PIER DATA

DESCRIPTION	PIER No. 5 N.B.	PIER No. 5 S.B.	PIER No. 6 N.B.	PIER No. 6 S.B.
ELEVATION A	409.30	409.30	410.50	407.30
" " (B)	412.80	412.80	414.00	410.80
" " (C)	433.45	433.55	431.96	432.12
" " D	437.95	438.05	436.46	436.62
" " E	439.26	439.30	437.79	437.88
" " F	439.50	439.54	438.00	438.10
" " G	439.46	439.56	437.95	438.11
" " H	439.20	439.30	437.71	437.87
DIM. A	20'-2"	20'-3"	17'-5½"	20'-10"
DIM. B	11"	1'-0"	3"	7"
NO. HOOPS	21	21	19	22

ANCHOR BOLT DATA

GIRDER		PIER NO.5 S.B. & N.B. ϕ BOLT	PIER NO.5 S.B. & N.B. REQ'D. EMBED.	PIER NO.5 S.B. & N.B. DIM. C	PIER NO.6 N.B. & S.B. ϕ BOLT	PIER NO.6 N.B. & S.B. REQ'D. EMBED.	PIER NO.6 N.B. & S.B. DIM. C
FIXED BRGS.	G1	1½"	1'-3"	1'-0"	1½"	1'-3"	1'-0"
	G2	1½"	1'-3"	1'-0"	1½"	1'-3"	1'-0"
	G3	1½"	1'-3"	1'-0"	1½"	1'-3"	1'-0"
	G4	1½"	1'-3"	1'-0"	1½"	1'-3"	1'-0"
EXP BRGS.	G1	1½"	1'-3"	1'-0"	1½"	1'-3"	1'-0"
	G2	1½"	1'-3"	1'-0"	1¼"	1'-0"	10"
	G3	1½"	1'-3"	1'-0"	1¼"	1'-0"	10"
	G4	1½"	1'-3"	1'-0"	1½"	1'-3"	1'-0"

BRIDGE NO.2
INTERSTATE ROUTE 481 OVER DEWITT YARDS

PIERS 5 & 6 (N.B. & S.B.)

DRAWING NO. 11 OF 50

PROJECT ENGINEER P. Forker
CHARGE OF I. Eckel
DESIGNED BY L. D. Tuttobene
DESIGN CHECKED BY N. Toppazzini
DETAILED BY J. C. Thompson
DETAIL CHECKED BY W. J. Sweet

F.I.S.H. 70-7

FED. RD. REG. NO.	STATE	FEDERAL AID PROJECT NO.	SHEET NO.	TOTAL SHEETS
1	NEW YORK	I-490-3(28) I-481-2(116)	190	206

INTERSTATE ROUTE 481 (FISH 70)
DEWITT - SYRACUSE (FISH 2)
ONONDAGA COUNTY

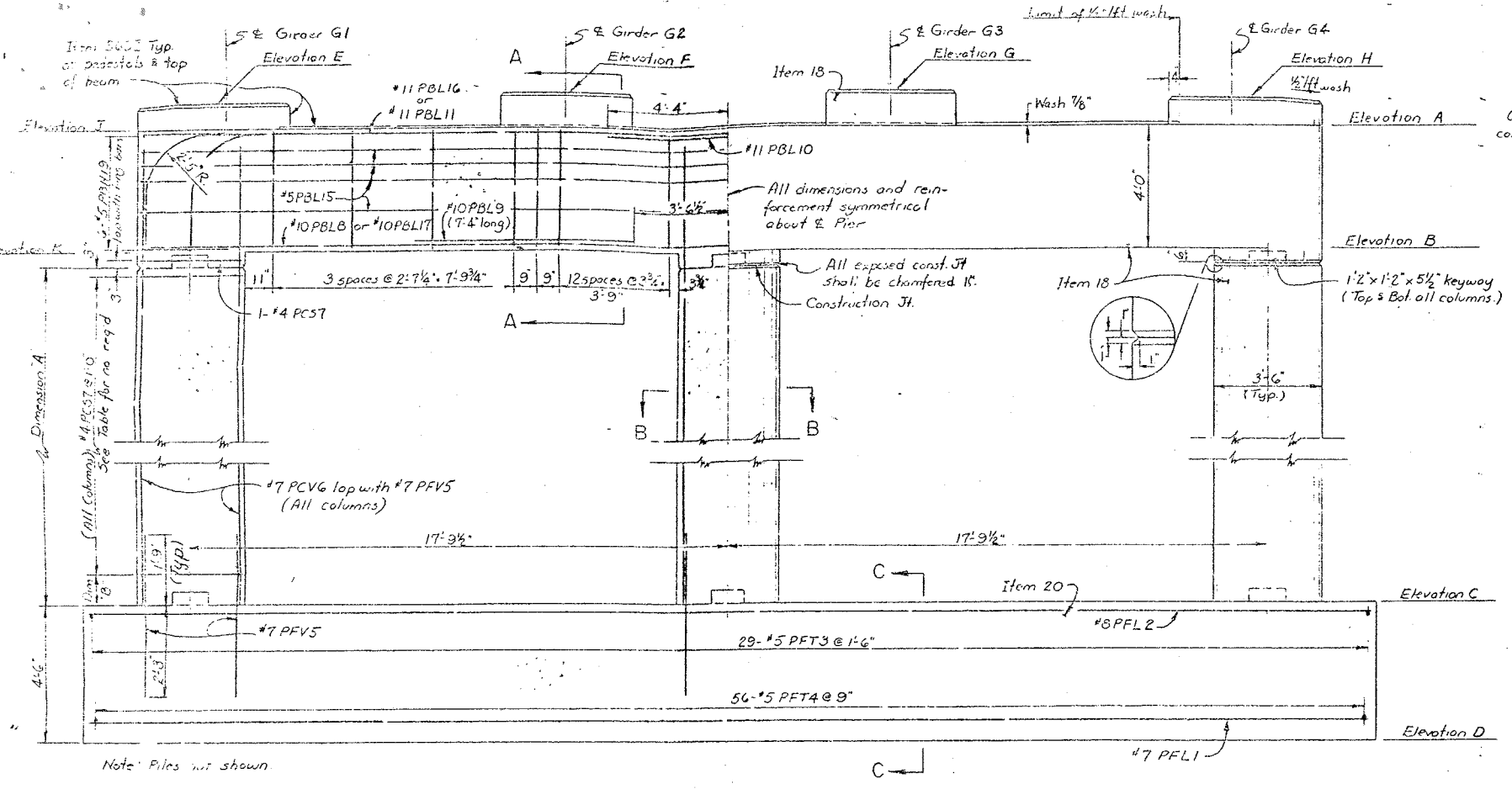

ELEVATION
Scale 3/8"=1'-0"

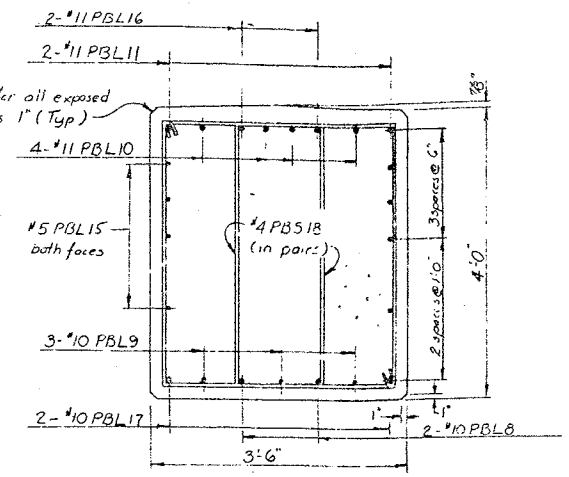

SECTION A-A
Scale 3/4"=1'-0"

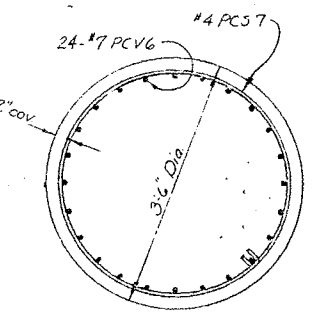

SECTION B-B
Scale 3/4"=1'-0"

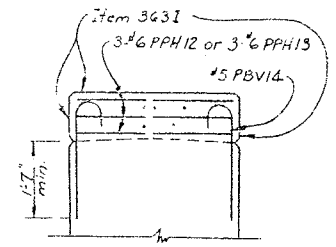

SECTION D-D
Scale 1/2"=1'-0"

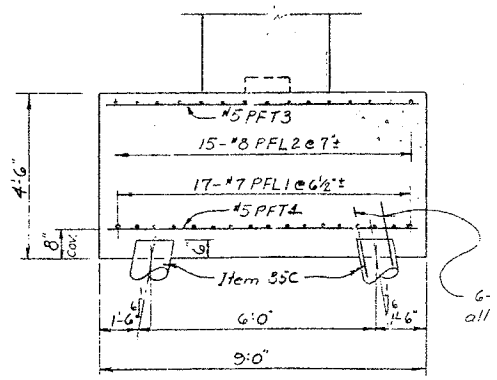

SECTION C-C
Scale 3/8"=1'-0"

Note: All footing reinforcement shall have a min. cover of 3" unless otherwise shown.
All other reinforcement shall have a min. cover of 2" unless otherwise shown.
Estimated length of cast-in-place concrete piles = 80' at Pier 7 NB & SB, 70' at Pier 8 NB & SB and Pier 9 NB
For design purposes the pile load does not exceed 35 tons per pile.

For details of pile reinforcement see Drawing No. 42

STATION "A"

	NBL	SBL
PIER 7	227+26.76	228+78.32
PIER 8	228+50.76	230+02.32
PIER 9	229+74.76	

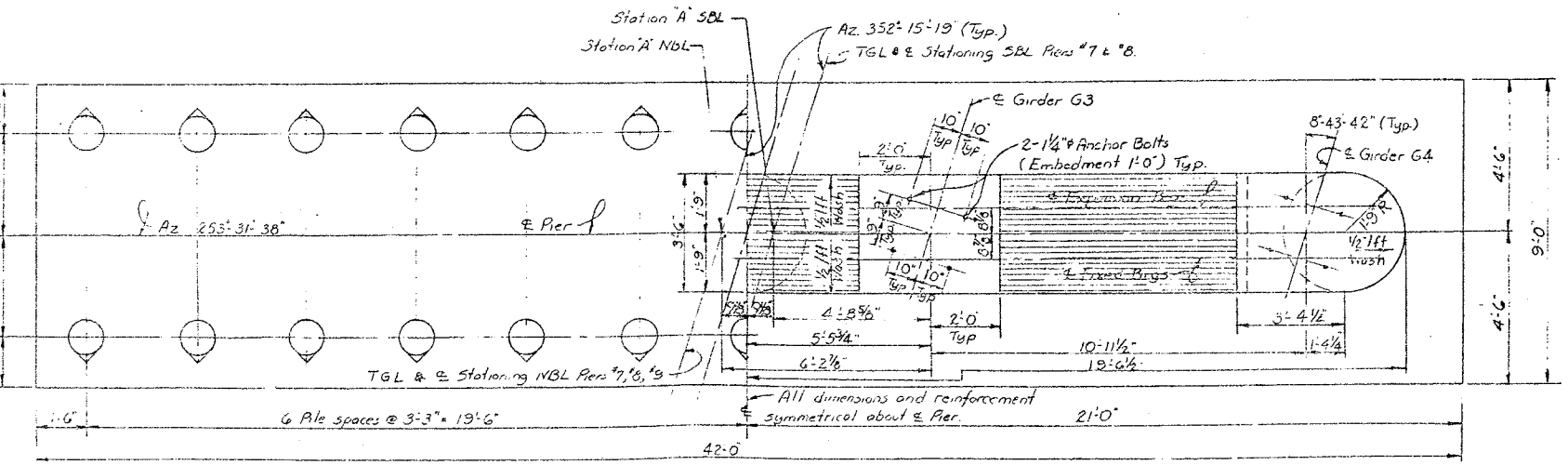

Indicates battered piles. (4 on 1)

FOOTING PILE LAYOUT
Scale 3/8"=1'-0"

PLAN
Scale 3/8"=1'-0"

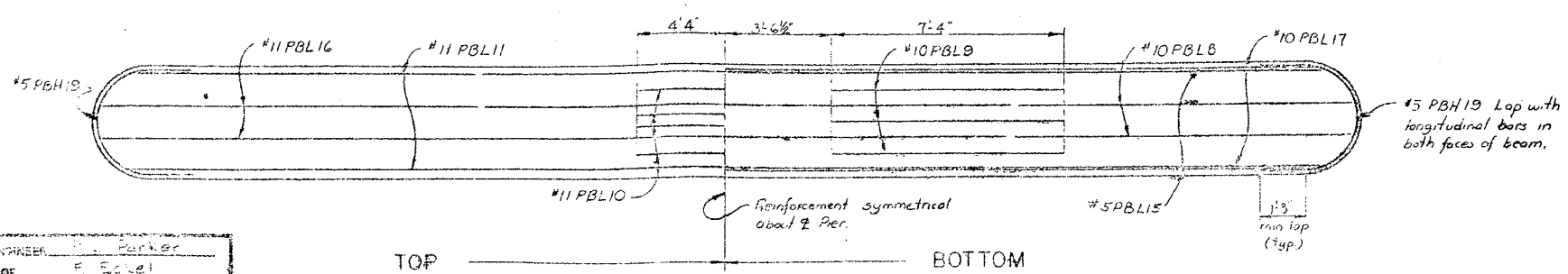

PIER CAP REINFORCEMENT
Scale 3/8"=1'-0"

PIER DATA

DESCRIPTION	NORTHBOUND			SOUTHBOUND	
	PIER 7	PIER 8	PIER 9	PIER 7	PIER 8
ELEVATION A	438.29	436.51	434.36	438.49	436.74
" B	434.29	432.51	430.36	434.49	432.74
" C	410.00	408.80	407.70	409.00	408.00
" D	405.50	404.30	403.20	404.50	403.50
" E	439.39	437.62	435.69	439.52	437.79
" F	439.59	437.82	435.74	439.73	437.99
" G	439.54	437.76	435.62	439.74	438.00
" H	439.29	437.51	435.36	439.49	437.74
DIM A	23.79	23.21	22.16	24.99	24.24
" B	6 1/2"	11 1/2"	11"	9"	1'-0"
NO. HOOPS	24	23	22	25	24
ELEVATION J	438.29	436.51	434.69	438.49	436.74
ELEVATION K	434.29	432.51	430.69	434.49	432.74

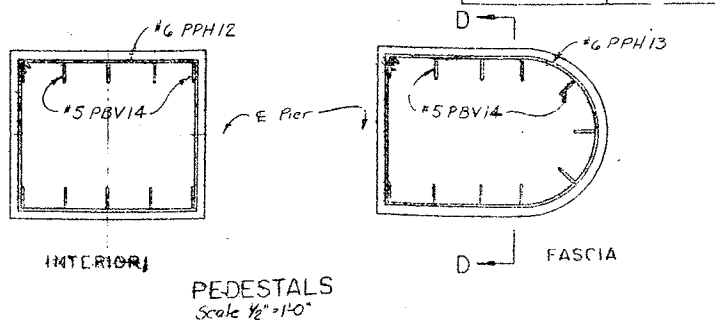

PEDESTALS
Scale 1/2"=1'-0"

PROJECT ENGINEER	L. Parker
IN CHARGE OF	E. Fickel
REVIEWED BY	L. Lowe
DESIGN DETAILED BY	L. A. TORDELLA
CHECKED BY	Ted Smith
DRAWN BY	S. Pierce

BRIDGE NO. 2
INTERSTATE ROUTE 481 OVER DEWITT YARDS

PIERS 7 & 8 NBL & SBL, PIER 9 NBL

DRAWING NO. 12 OF 50

F.I.S.H. 70-7

FED. RD. REG. NO.	STATE	FEDERAL AID PROJECT NO.	SHEET NO.	TOTAL SHEETS
1	NEW YORK	I-90WC-8(28) I-431-2(116.	191	302

INTERSTATE ROUTE CONNECTION 570
EXTENSION INTERCHANGE (PHASE 2)
ONONDAGA COUNTY

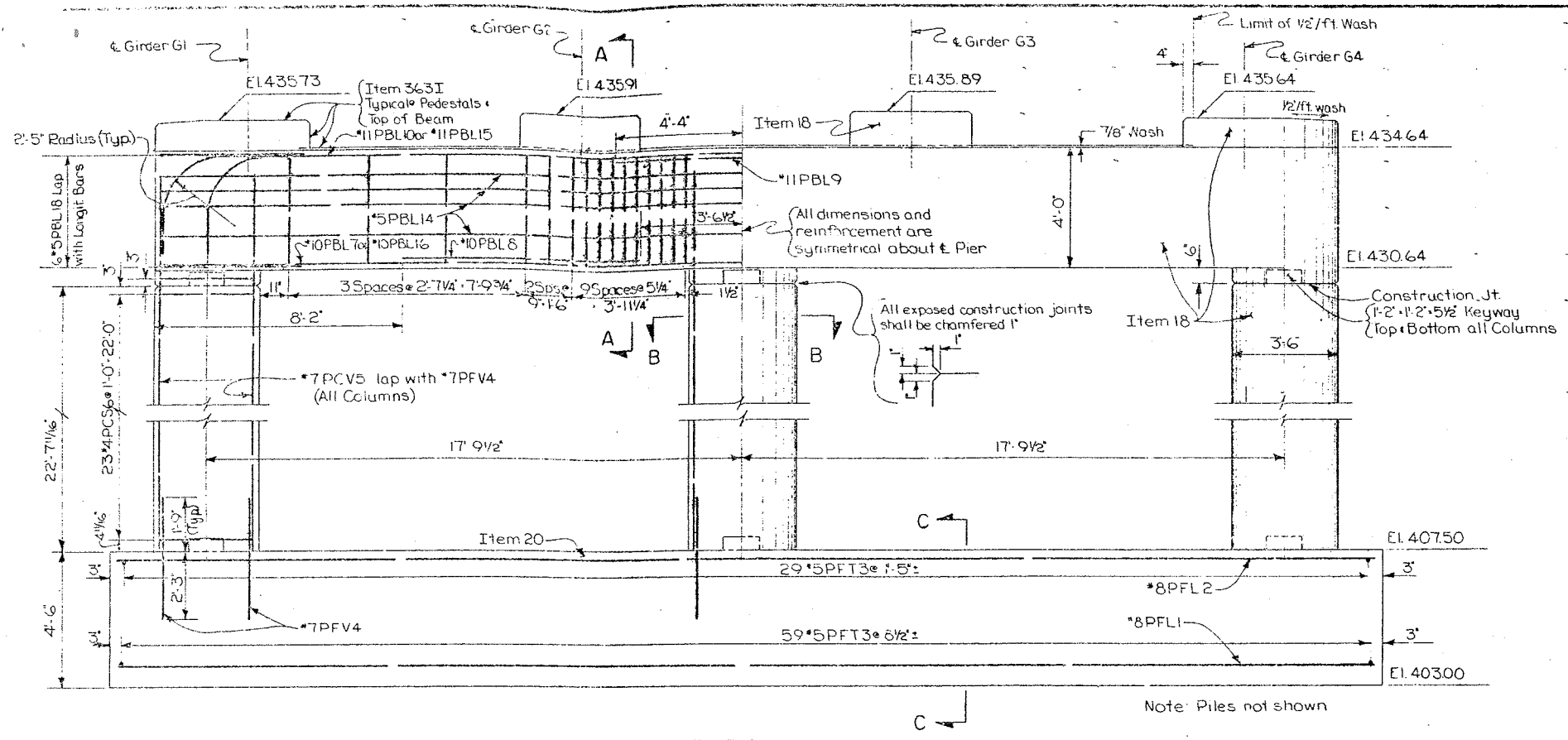

ELEVATION
Scale 3/8"=1'-0"

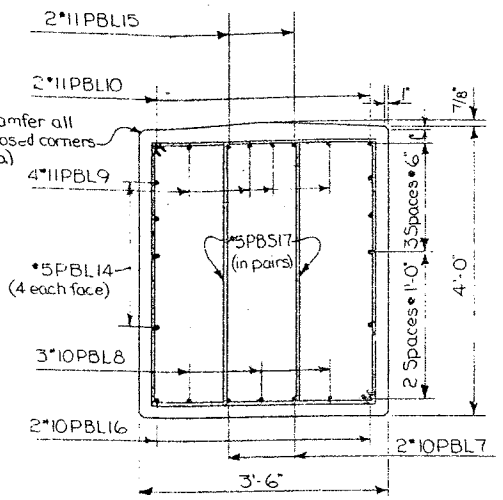

SECTION A-A
Scale 3/4"=1'-0"

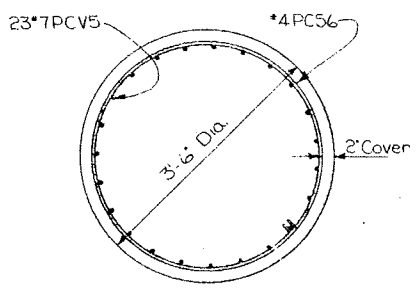

SECTION B-B
Scale 3/4"=1'-0"

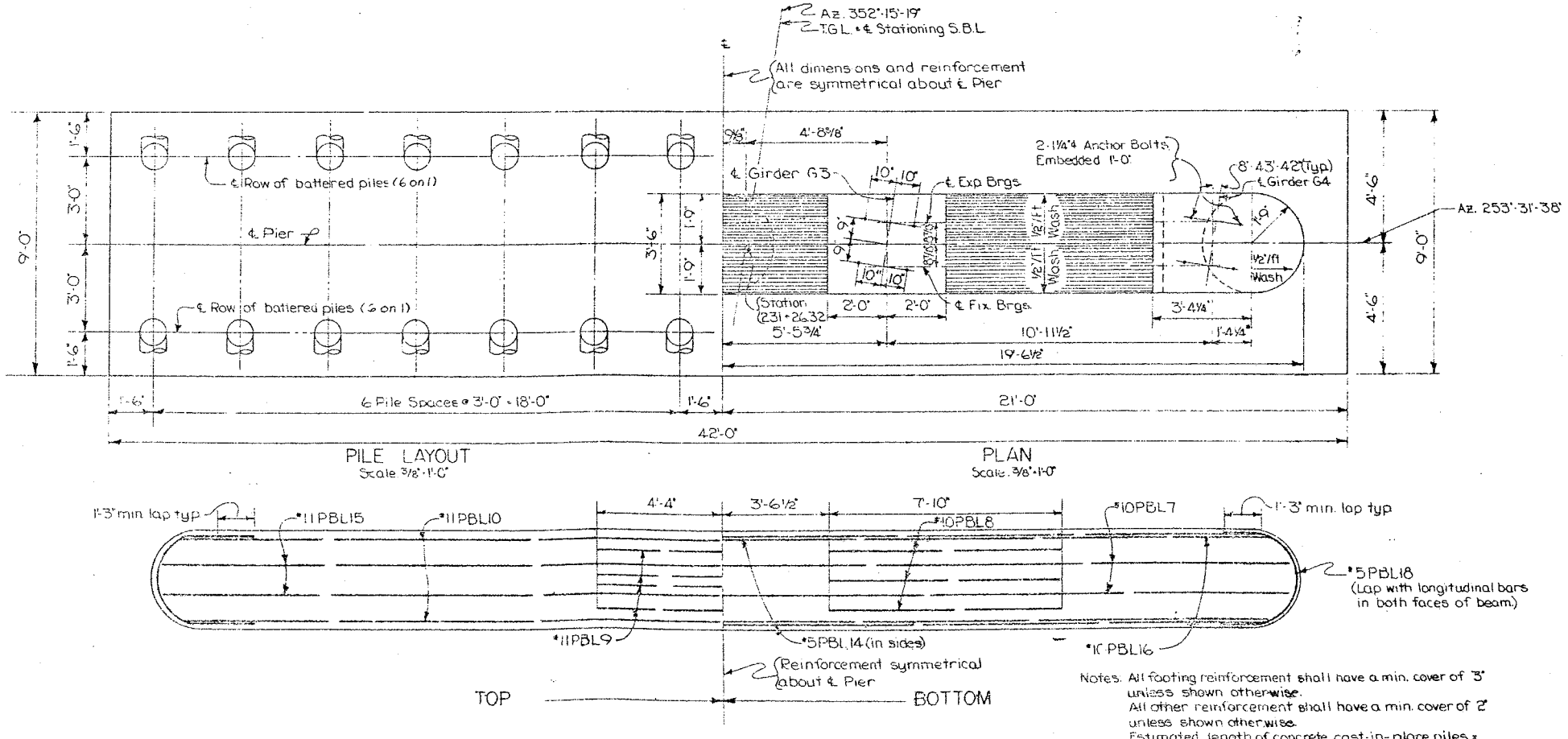

PILE LAYOUT
Scale 3/8"=1'-0"

PLAN
Scale 3/8"=1'-0"

PIER CAP REINFORCEMENT
Scale 3/8"=1'-0"

Notes: All footing reinforcement shall have a min. cover of 3" unless shown otherwise.
All other reinforcement shall have a min. cover of 2" unless shown otherwise.
Estimated length of concrete cast-in-place piles = 70'. For design purposes the pile load does not exceed 35 tons per pile.

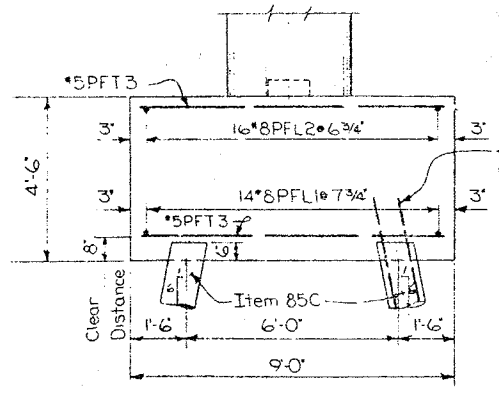

SECTION C-C
Scale 3/8"=1'-0"

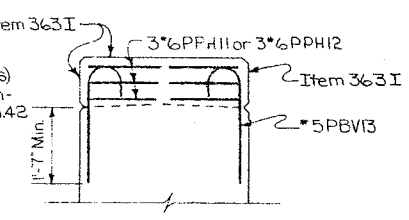

SECTION D-D
Scale: 1/2"=1'-0"

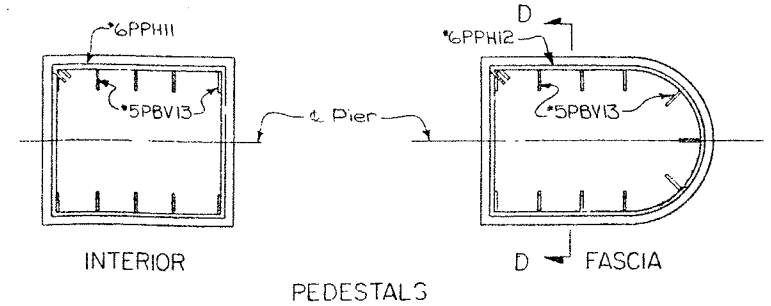

INTERIOR

PEDESTALS
Scale: 1/2"=1'-0"

D FASCIA

PROJECT ENGINEER E. L. Parker
IN CHARGE OF F. Eckel
DESIGNED BY S. Rowe
DESIGN CHECKED BY N. A. Toppres
DETAILED BY J. Darcy
DETAIL CHECKED BY S. Rowe

BRIDGE NO. 2
INTERSTATE ROUTE 481 OVER DEWITT YARDS
PIER 9 (SB)
DRAWING NO. 13 OF 50

F.I.S.H. 70-7

FED. RD. REG. NO.	STATE	FEDERAL AID PROJECT NO.	SHEET NO.	TOTAL SHEETS
1	NEW YORK	F-690-3(28) F-481-2(116)	192	309

INTERSTATE ROUTE CONNECTION 570
BUTTERNUT INTERCHANGE (PHASE 2)
ONONDAGA COUNTY

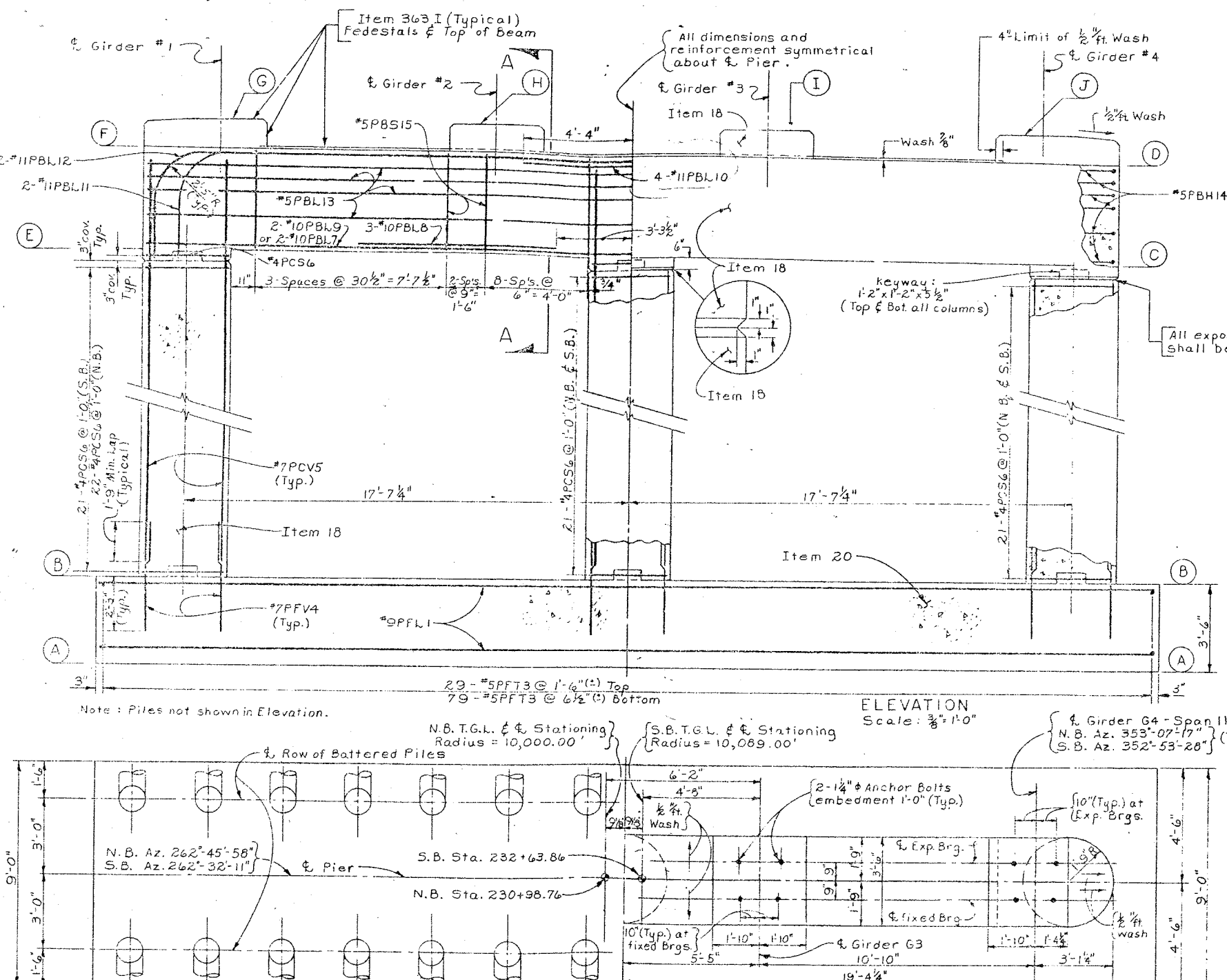

ELEVATION
Scale : ⅜" = 1'-0"

SECTION A-A
Scale : ¾" = 1'-0"

Note : Piles not shown in Elevation.

PILE LAYOUT
Scale : ⅜" = 1'-0"

PLAN
Scale : ⅜" = 1'-0"

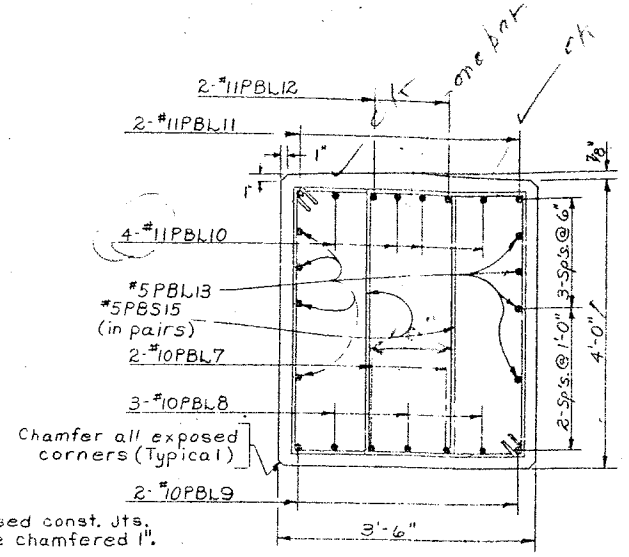

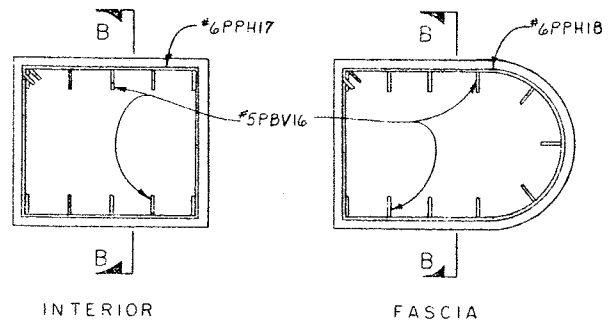

PEDESTAL REINFORCEMENT
Scale : ½" = 1'-0"

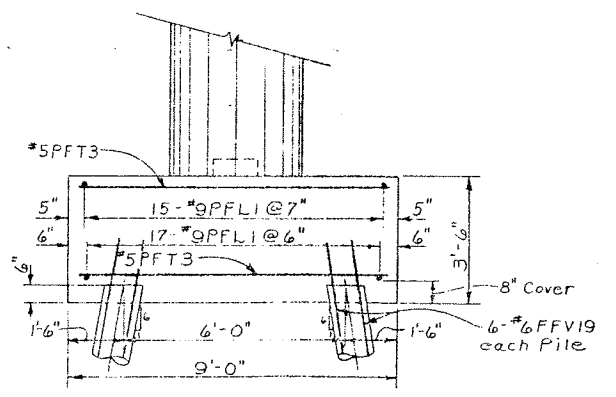

END VIEW
Scale : ⅜" = 1'-0"

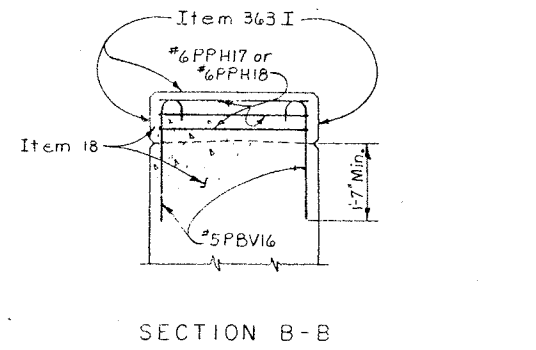

SECTION B-B
Scale : ½" = 1'-0"



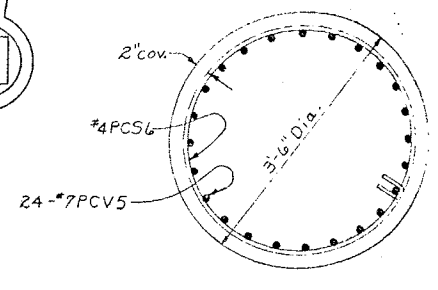

TYPICAL COLUMN SECTION
Scale : ¾" = 1'-0"

Notes :
All footing reinforcement shall have a min. cover of 3" unless otherwise shown.
All other reinforcement shall have a min. cover of 2" unless otherwise shown.
Estimated length of Cast-in-Place concrete piles = 70'-0" S.B. & 65'-0" N.B.
For Design Purposes the pile load does not exceed 35 Tons per Pile.
For details of Cast-in-Place Piles see Dwg. #42.

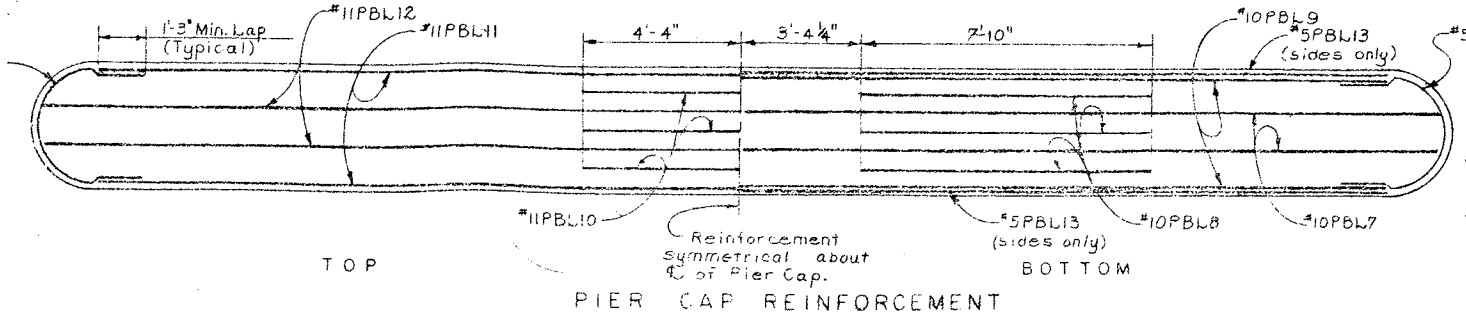

PIER CAP REINFORCEMENT

ELEVATIONS		
LOCATION	SOUTHBOUND	NORTHBOUND
A	403.20	403.00
B	406.70	406.50
C	427.85	427.83
D	431.85	431.83
E	428.35	428.48
F	432.35	432.48
G	433.42	433.55
H	433.31	433.35
I	433.15	433.13
J	432.92	432.91

PROJECT ENGINEER R. Packer
CHARGE OF F. Eckel
DESIGNED BY S. Rowe
DESIGN CHECKED BY N. A. Tappsas
DETAILED BY J.C. Thompson
DETAIL CHECKED BY Lloyd Faure

BRIDGE NO. 2
INTERSTATE ROUTE 481 OVER DEWITT YARDS
PIER 10 (SB & NB)

F.I.S.H. 70-7

FED. RD. REG. NO.	STATE	FEDERAL AID PROJECT NO.	SHEET NO.	TOTAL SHEETS
1	NEW YORK	I-690-3(28) I-481-2(116)	193	309

INTERSTATE ROUTE CONNECTION 570
BUTTERNUT INTERCHANGE (PHASE 2)
ONONDAGA COUNTY

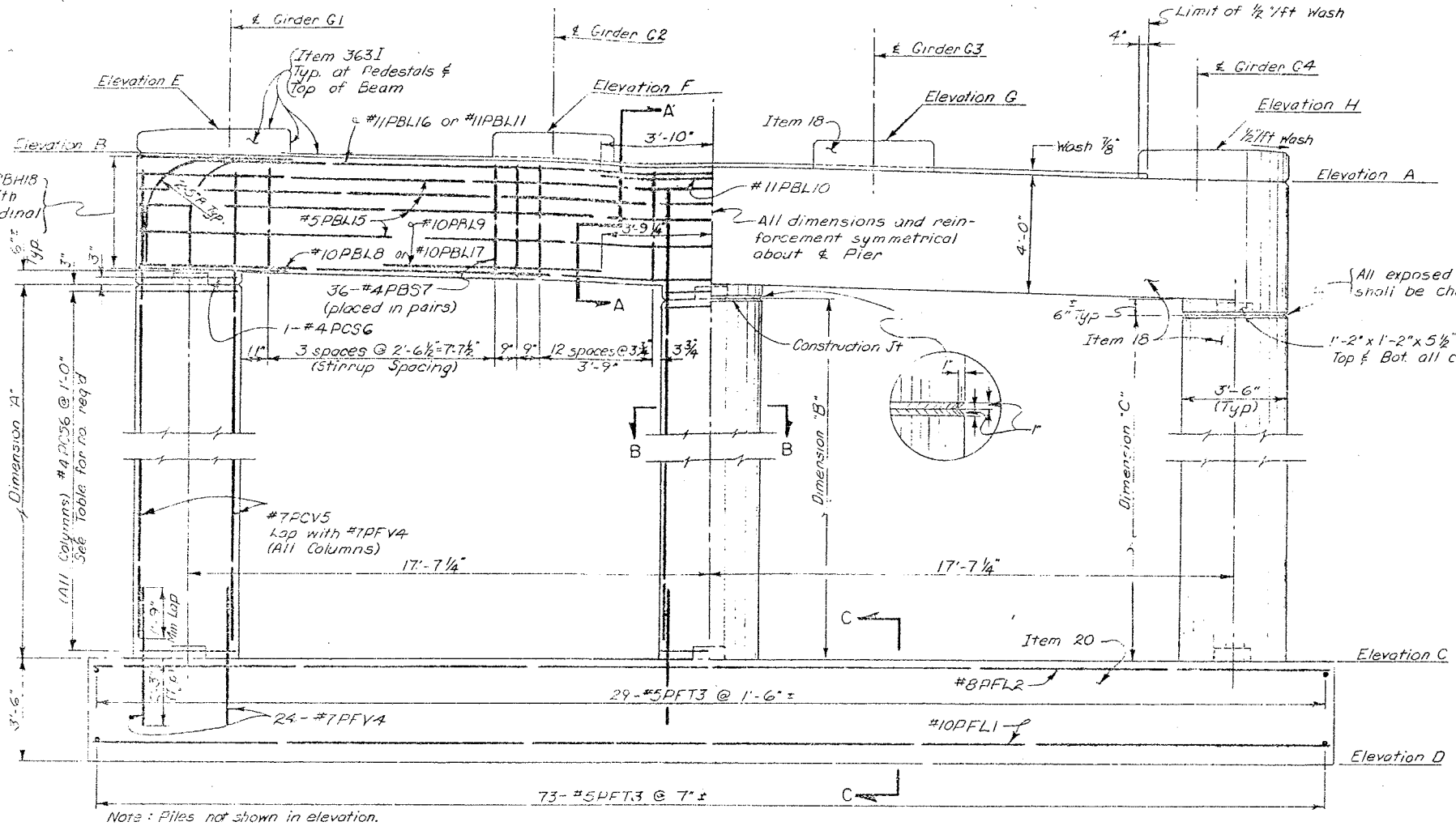

Note : Piles not shown in elevation.

ELEVATION
Scale : ⅜"=1'-0"

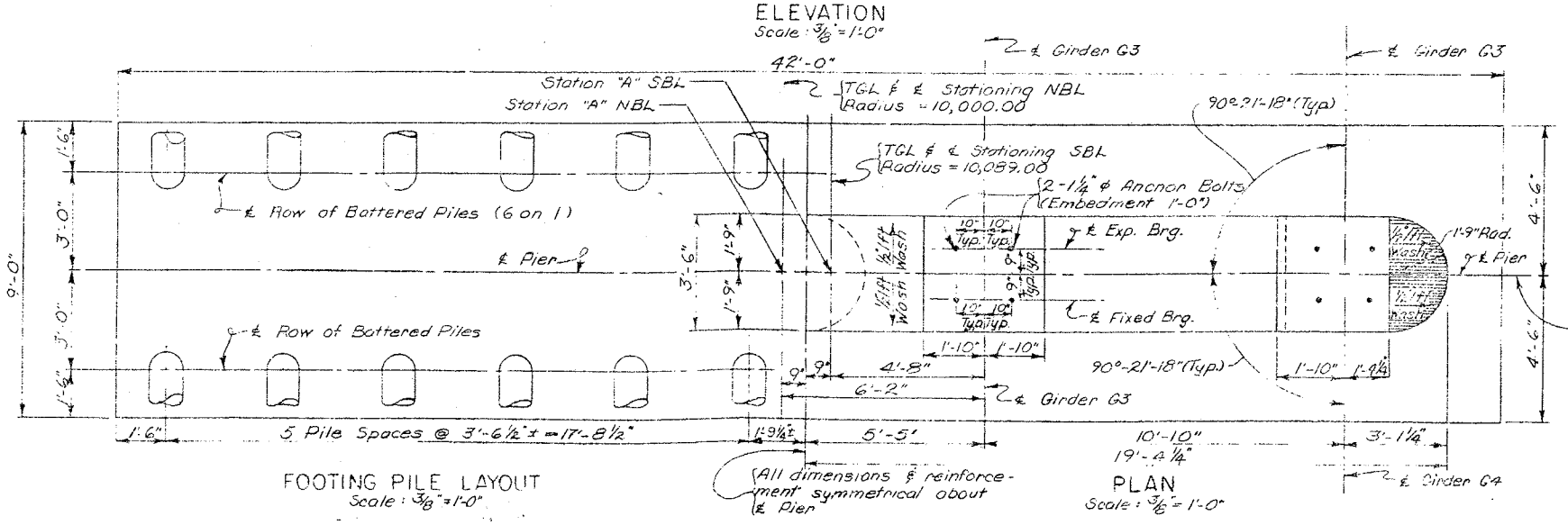

FOOTING PILE LAYOUT
Scale : ⅜"=1'-0"

(All dimensions & reinforcement symmetrical about ℄ Pier)

PLAN
Scale : ⅜"=1'-0"

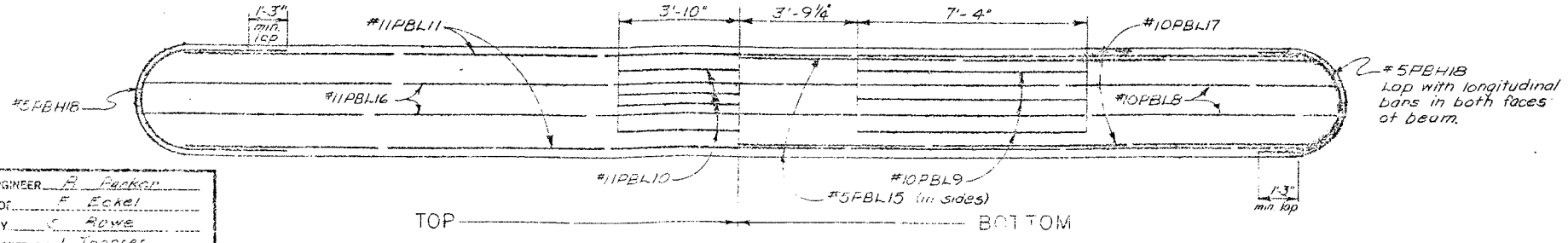

PIER CAP REINFORCEMENT
Scale : ⅜"=1'-0"

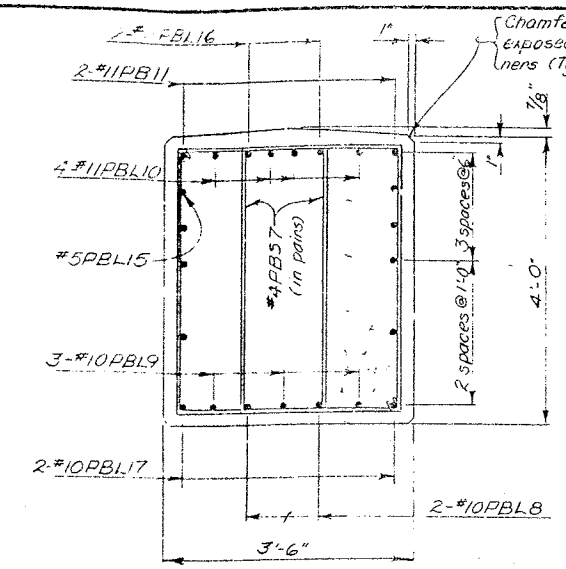

SECTION A-A
Scale : ¾"=1'-0"

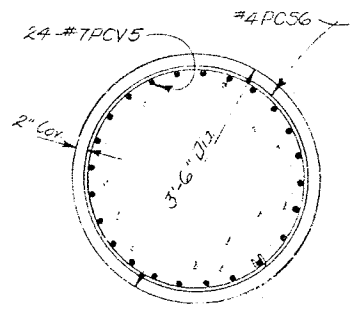

SECTION B-B
Scale : ¾"=1'-0"
Typical all columns

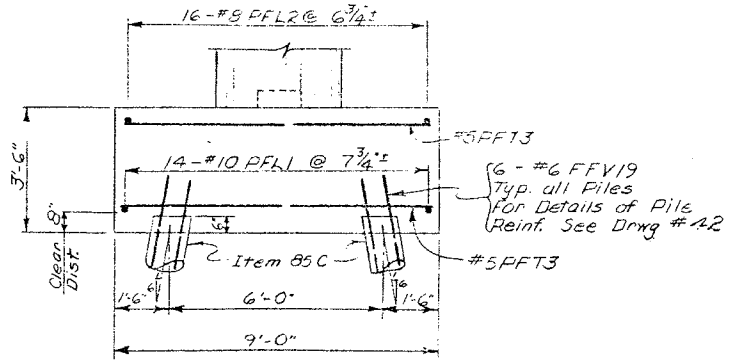

SECTION C-C
Scale : ⅜"=1'-0"

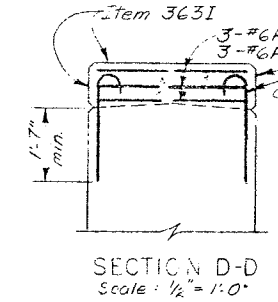

SECTION D-D
Scale : ½"=1'-0"

Note : All footing reinforcement shall have a min. cover of 3" unless otherwise shown.
All other reinforcement shall have a min. cover of 2" unless otherwise shown.
Estimated length of Cast-In-Place Concrete Piles = 65' at Piers 11 & 12 NB & SB.
For design purposes the Pile Load does not exceed 35 Tons Per Pile.



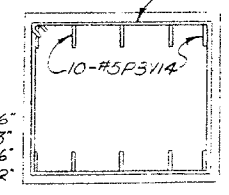

INTERIOR

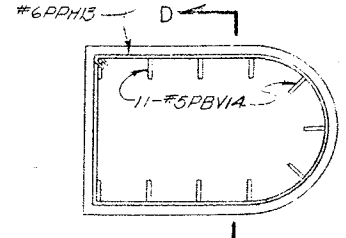

FASCIA

PEDESTALS
Scale : ½"=1'-0"

PIER DATA

DESCRIPTION	NORTHBOUND		SOUTHBOUND	
	PIER 11	PIER 12	PIER 11	PIER 12
ELEVATION A	429.04	425.81	429.03	425.77
" B	429.72	426.49	429.71	426.44
" C	406.30	406.40	406.30	406.40
" D	402.80	402.90	402.80	402.90
" E	430.72	427.49	430.71	427.45
" F	430.49	427.26	430.48	427.22
" G	430.27	427.04	430.26	427.00
" H	430.04	426.81	430.03	426.77
DIM "A"	18.92	15.59	18.91	15.54
"B"	18.58	15.25	18.57	15.21
"C"	18.24	14.91	18.23	14.87
NO. HOOPS	19 Per Col.	16 Per Col.	19 Per Col.	16 Per Col.
STATION "A"	232+22.76	233+46.76	233+88.86	235+13.86

PROJECT ENGINEER A. Farkas
CHARGE OF F. Eckel
DESIGNED BY K. Rowe
DESIGN CHECKED BY J. Toppass
DETAILED BY J. Duncant
FINAL CHECKED BY T.G. Keen

BRIDGE NO. 2
INTERSTATE ROUTE 481 OVER DEWITT YARDS

PIERS 11 & 12 (N.B. & S.B.)

DRAWING NO. 15 OF 30

F.I.S.H. 70-7

FED. RD. REG. NO.	STATE	FEDERAL AID PROJECT NO.	SHEET NO.	TOTAL SHEETS
1	NEW YORK	I-590-3(28) I-481-2(116)	194	309

INTERSTATE ROUTE CONNECTION 570
SUTTERSVILLE INTERCHANGE (PHASE 2)
ONONDAGA COUNTY

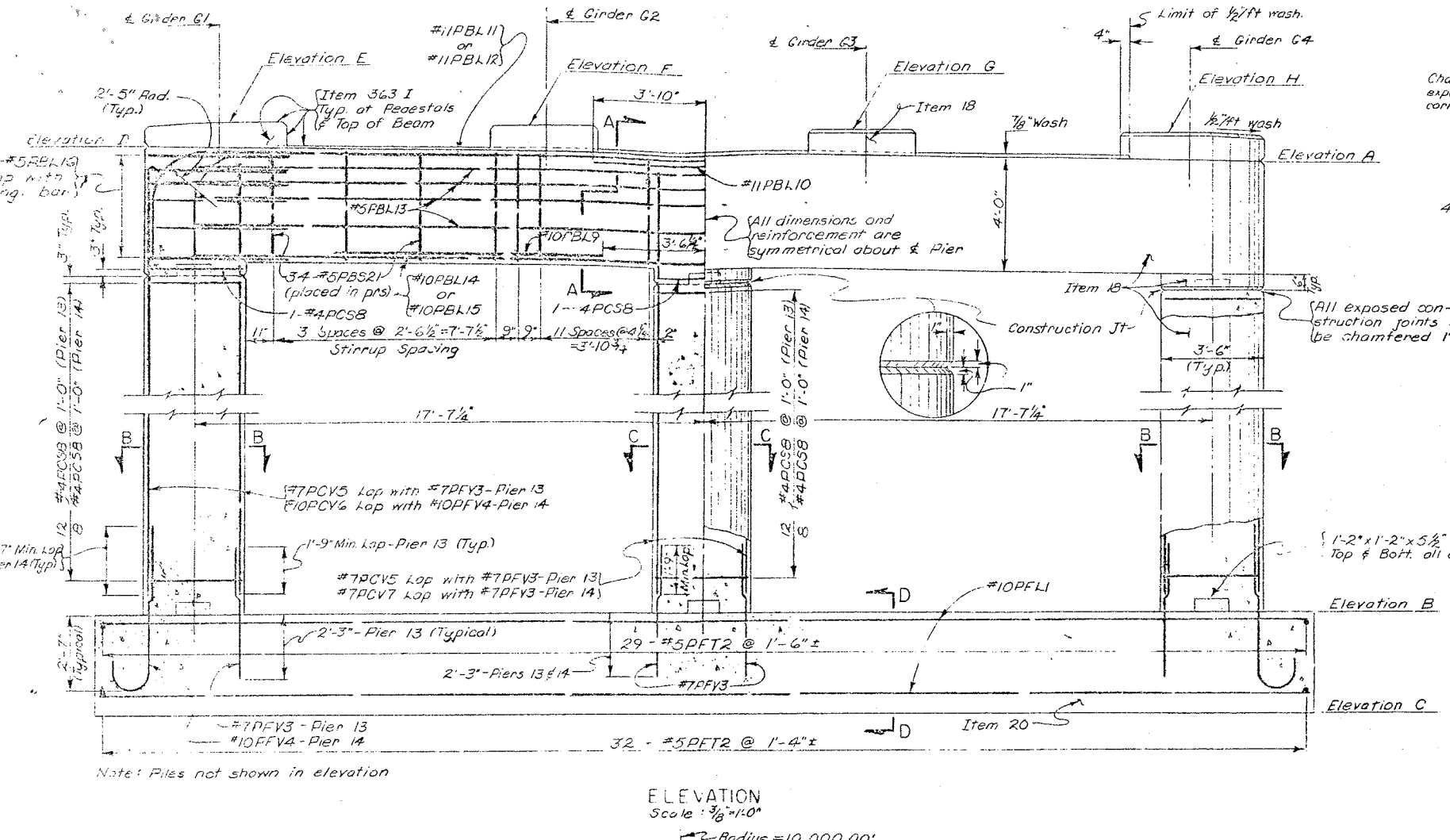

Note: Piles not shown in elevation

ELEVATION
Scale: ⅜"=1'-0"

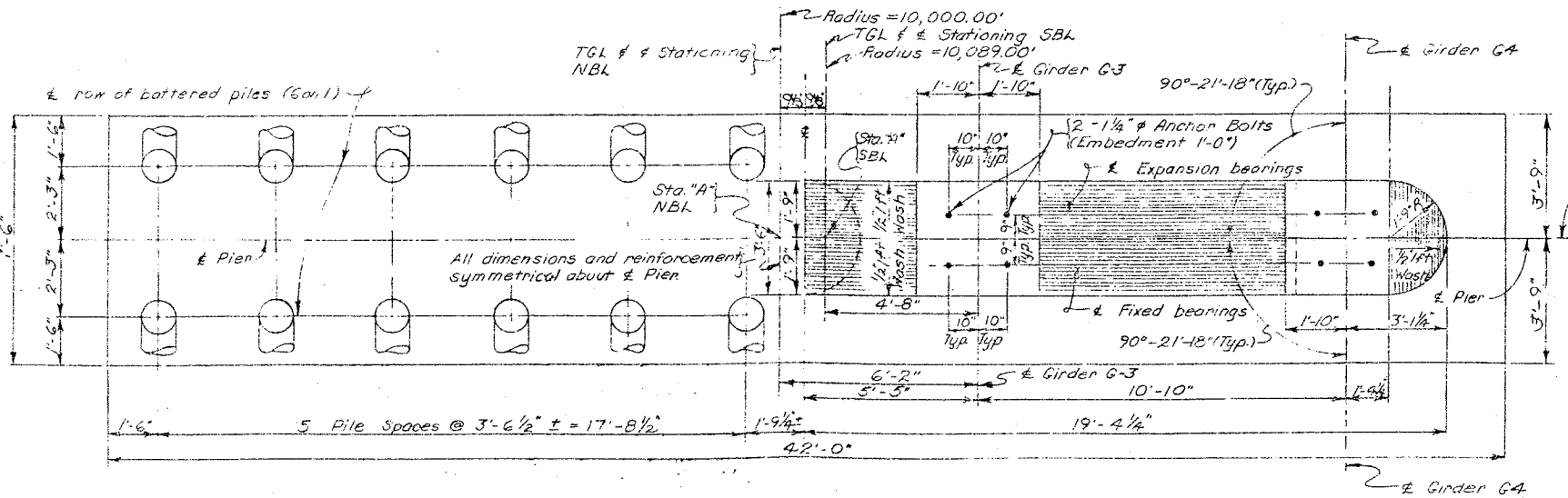

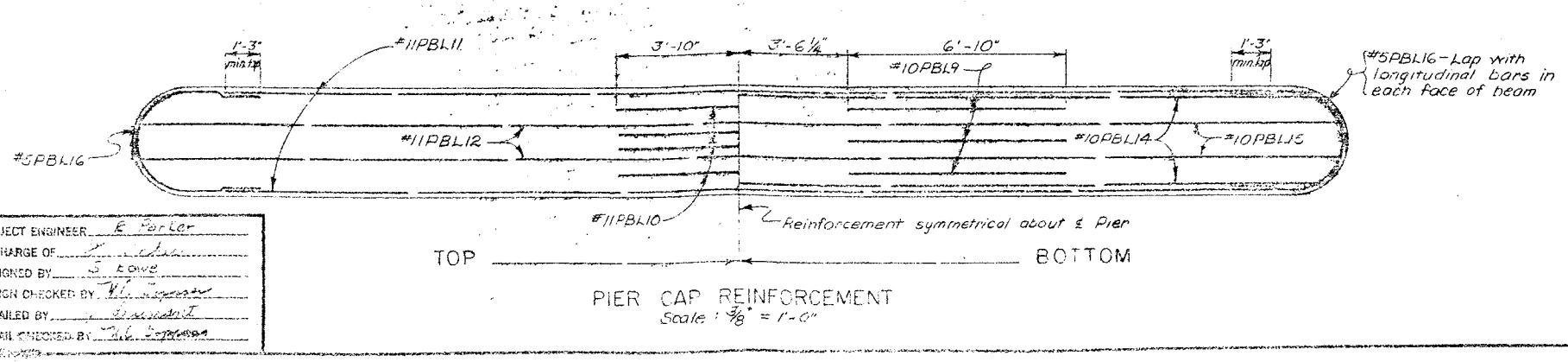

PIER CAP REINFORCEMENT
Scale: ⅜" = 1'-0"

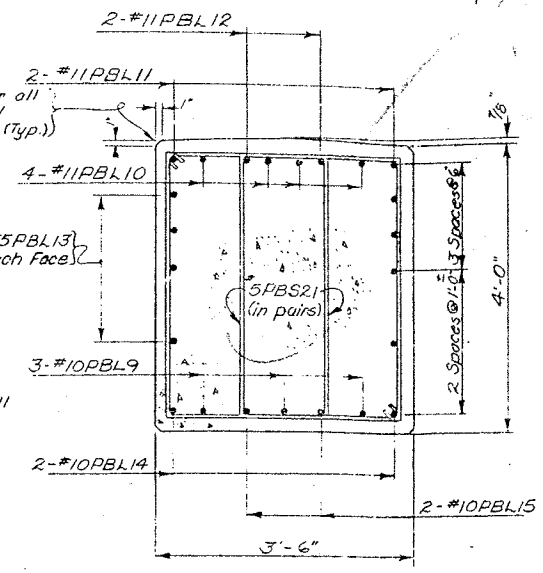

SECTION A-A
Scale: ¾"=1'-0"

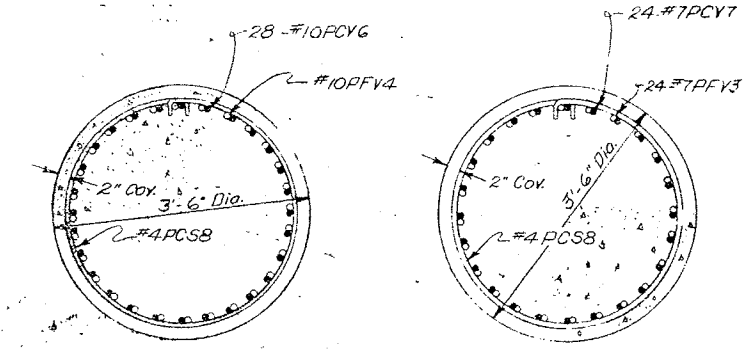

SECTION B-B, PIER 14 SECTION C-C, PIER 14
Scale: ¾"=1'-0"

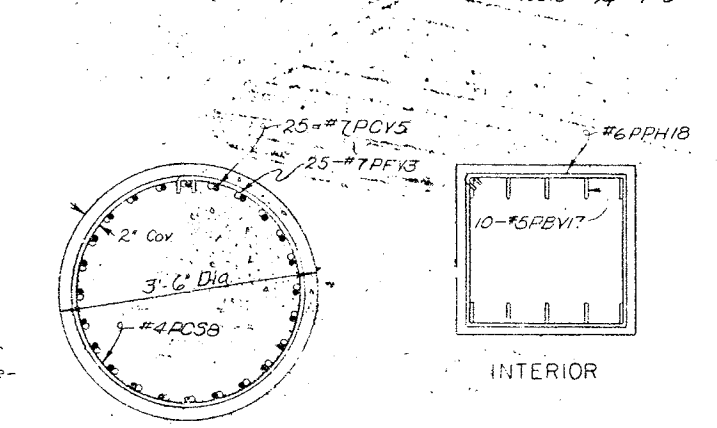

INTERIOR

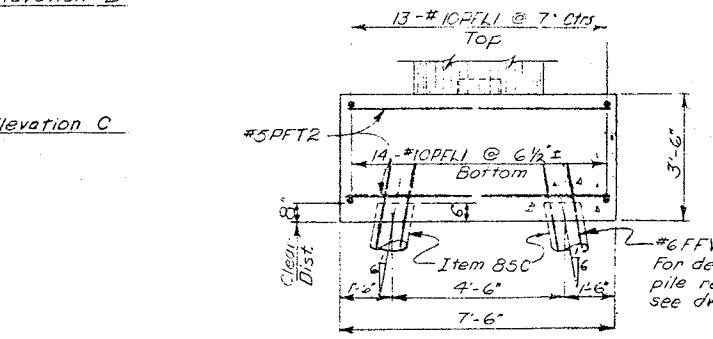

SECTION D-D
Scale: ⅜"=1'-0"

Pier 13 NB Az 264°33'51"
Pier 14 NB Az 265°36'29"
Pier 13 SB Az 264°39'57"
Pier 14 SB Az 265°22'33"

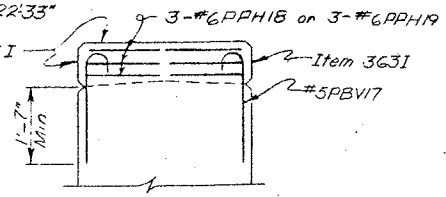

SECTION E-E
Scale: ½"=1'-0"

SECTION B-B & C-C, PIER 13
Scale: ¾"=1'-0"

STATION "A"		
PIER	NBL	SBL
#13	234+70.76	236+38.86
#14	235+94.76	237+63.86

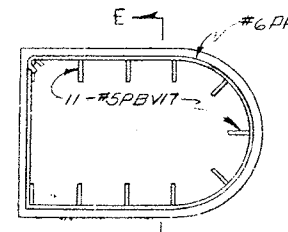

FASCIA PEDESTALS
Scale: ½"=1'-0"

Note:
All footing reinforcement shall have a min. cover of 3" unless otherwise shown.
All other reinforcement shall have a min. cover of 2" unless otherwise shown.
Estimated length of Cast-in-Place Concrete Piles = 65' Pier 13 SB, 60' Pier 13 NB & 60' Piers 14 NB & SB

For design purposes the pile load does not exceed 35 tons per pile.

PIER DATA

DESCRIPTION	NORTHBOUND		SOUTHBOUND	
	PIER 13	PIER 14	PIER 13	PIER 14
ELEVATION A	422.22	418.44	422.14	419.36
" B	406.70	407.00	406.70	407.00
" C	403.20	403.50	403.20	403.50
" D	422.90	419.12	422.81	419.03
" E	423.89	420.12	423.81	420.03
" F	423.67	419.90	423.59	419.81
" G	423.44	419.67	423.36	419.58
" H	423.22	419.44	423.14	419.36

PROJECT ENGINEER E. Porter
IN CHARGE OF [illegible]
DESIGNED BY S. Edme
DESIGN CHECKED BY W. [illegible]
DETAILED BY [illegible]
DETAIL CHECKED BY W. [illegible]

BRIDGE NO. 2
INTERSTATE ROUTE 481 OVER DEWITT YARDS

PIERS #13 & #14 (NB & SB)

DRAWING NO. 16 OF 50

F.I.S.H. 70-7

FED. RD. REG. NO.	STATE	FEDERAL AID PROJECT NO.	SHEET NO.	TOTAL SHEETS
1	NEW YORK	I-690-3(23) I-481-2(116)	195	309

INTERSTATE ROUTE CONNECTION 570
BUTTERNUT INTERCHANGE (PHASE 2)
ONONDAGA COUNTY

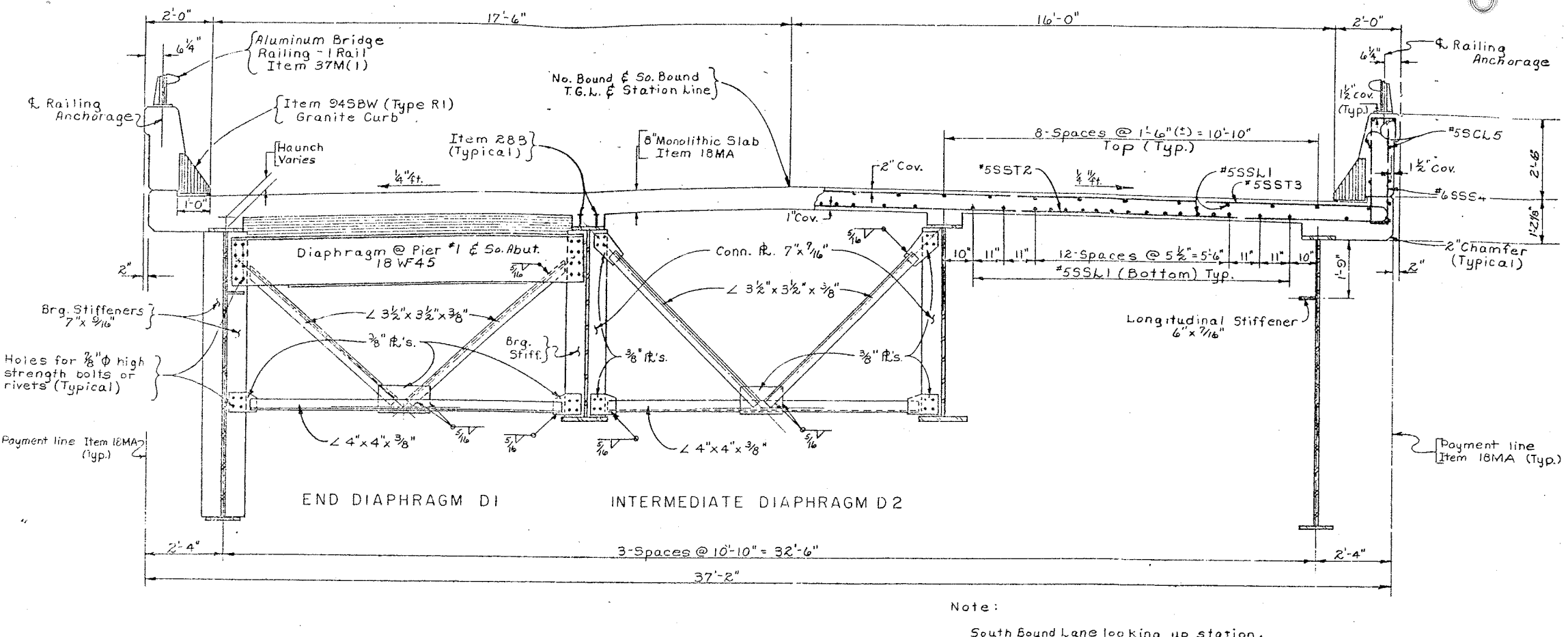

Note:

South Bound Lane looking up station.
North Bound Lane looking down station.

TRANSVERSE SECTION
Scale: ½" = 1'-0"

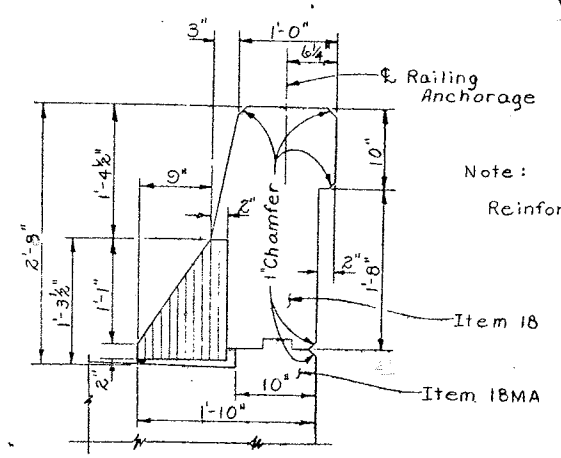

Note:

Reinforcement not shown.

PARAPET DETAIL
Scale: 1" = 1'-0"

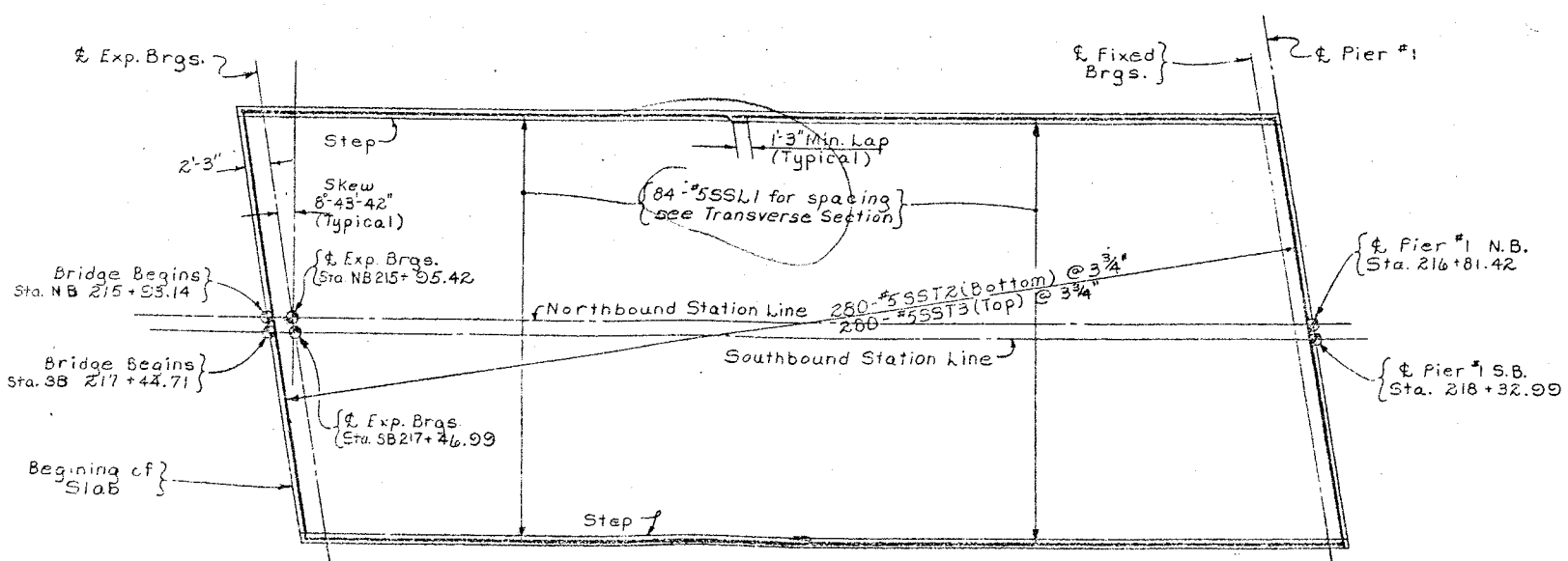

SLAB REINFORCEMENT PLAN
Scale: ⅛" = 1'-0"

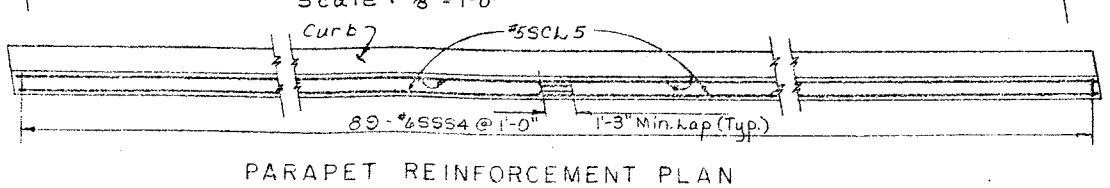

PARAPET REINFORCEMENT PLAN
Scale: ¼" = 1'-0"

Notes:

Holes for ⅞"φ rivets or high strength bolts may be omitted and welding substituted if contractor so elects. When the contractor elects to substitute the welded connection for the bolted connection shown, the amount of welding used shall be equivalent in strength to the bolts removed.

For details of Railing, Railing Anchorage and Granite Curbs see Dwg. # 35 & 36.

For Joint Details see Dwg. # 33.

PROJECT ENGINEER R. Parker
IN CHARGE OF F. Eckel
DESIGNED BY N. Toppses
DESIGN CHECKED BY R. Thimple
DETAILED BY J.C. Thompson
DETAIL CHECKED BY [illegible]

BRIDGE NO. 2
INTERSTATE ROUTE 481 OVER DEWITT YARDS

TRANSVERSE SECTION & SLAB PLAN
SPAN 1 N.B. & S.B.

DRAWING NO. 17 OF 50

FED. RD. REG. NO.	STATE	FEDERAL AID PROJECT NO.	SHEET NO.	TOTAL SHEETS
II	NEW YORK	I-690-8(28)	196	320
		I-481-2(16)		

INTERSTATE ROUTE CONNECTION 570
SYRACUSE PENETRATION (PHASE 2)
ONONDAGA COUNTY

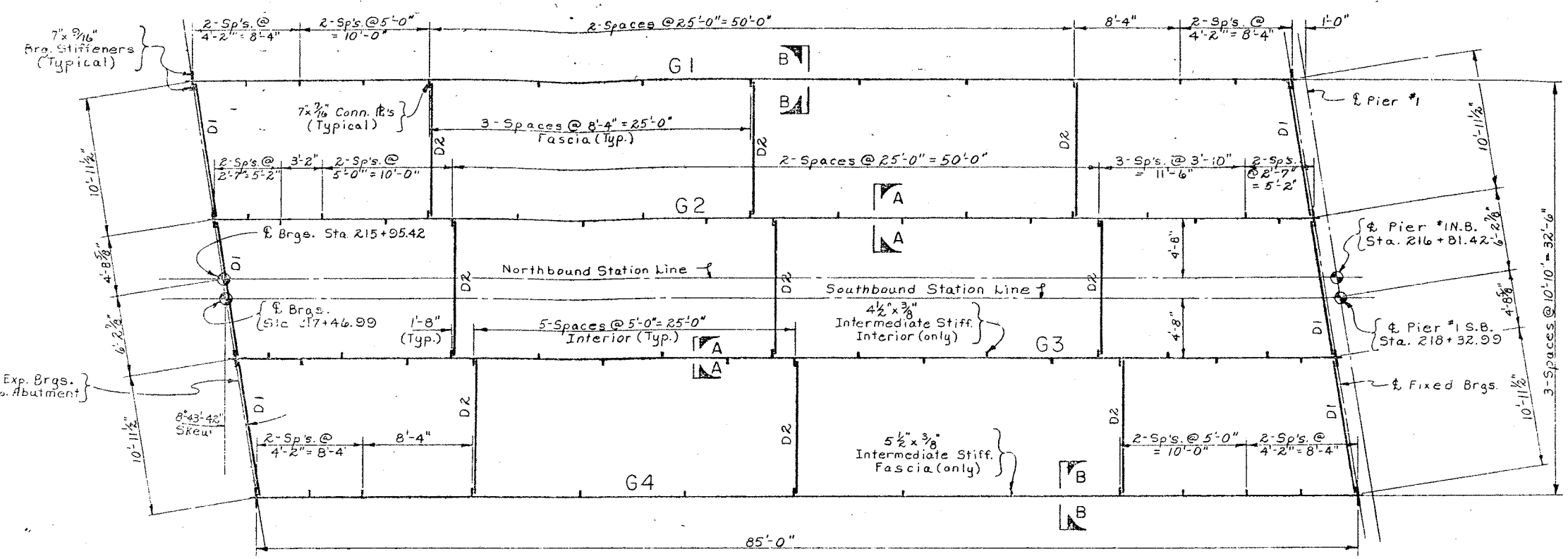

see Transverse Section for Diaphragms.

STEEL LAYOUT (S.B.&N.B.)

Scale : 3/16" = 1'-0"

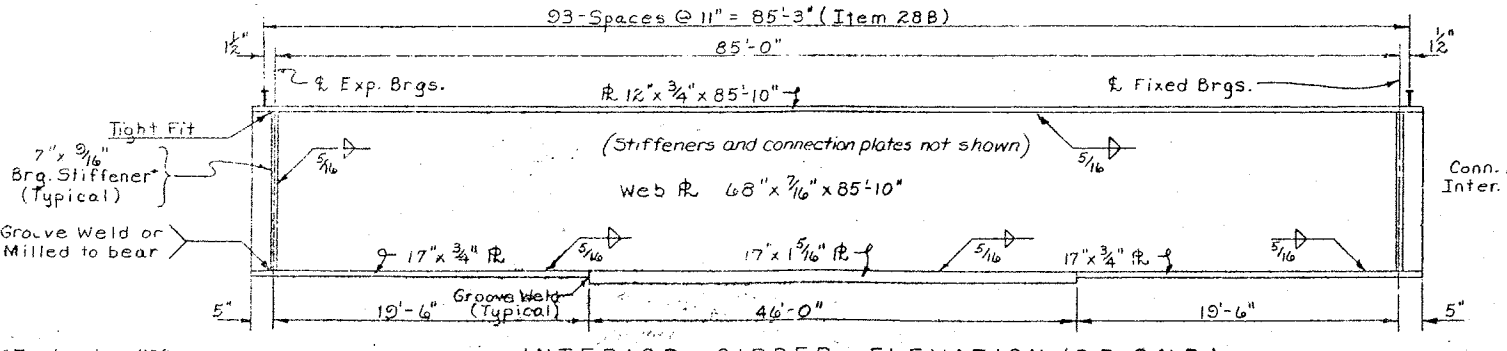

INTERIOR GIRDER ELEVATION (S.B.&N.B.)

Not to Scale

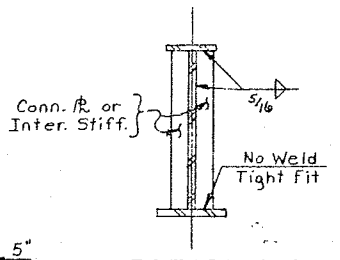

SECTION A-A

Not to Scale

*Two bearing stiffeners required at each end of girder.

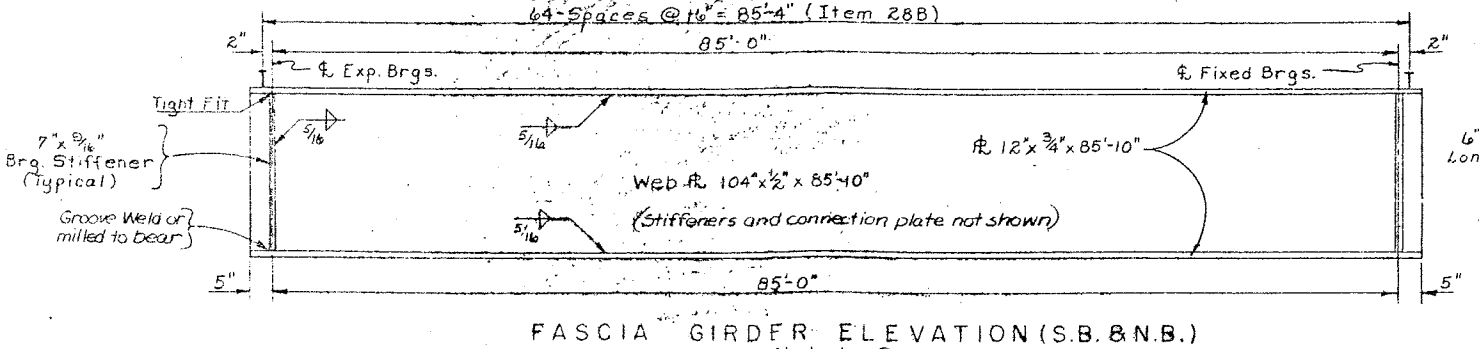

FASCIA GIRDER ELEVATION (S.B.&N.B.)

Not to Scale

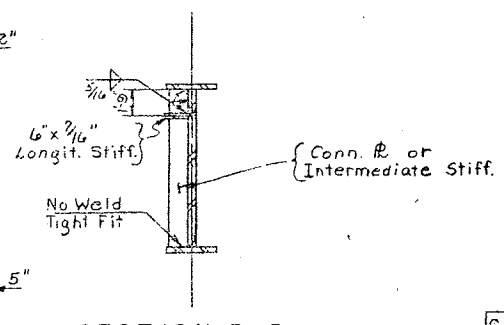

SECTION B-B

Not to Scale

Notes :

Web and flanges shall be ASTM designation A36 steel.

Stiffeners, Connection Plates, Diaphragm and Gusset Plates shall be ASTM designation A36 steel.

For Bearing Details see Drawing No's. 42 & 43.

Stud Shear Connectors shall be 6" high and placed in pairs. See Drawing No. 42 for additional details.

For Height of Haunch see Table of Haunch Heights Drawing No. 34.

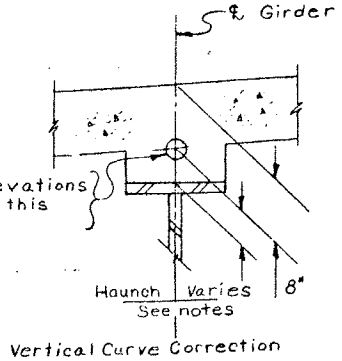

V.C.C. = Vertical Curve Correction

S.D.L. = Superimposed Dead Load, includes weight of railing.

GIRDER	SPAN	THEO. BOTTOM OF SLAB ELEVATIONS ℄ Exp. Brgs.	℄ Span	℄ Fix. Brgs.	DEFLECTIONS (FT.) STEEL	SLAB	SDL	TOTAL	CAMBER V.C.C. (ft.)	TOTAL (ft.)	TOTAL (in.)
G1 N.B.	1	446.55	447.12	447.65	.01	.03	.01	.05	.02	.07	⅞
G2 N.B.	1	446.80	447.40	447.90	.02	.08	.02	.12	.02	.14	1 11/16
G3 N.B.	1	446.79	447.36	447.89	.02	.08	.02	.12	.02	.14	1 11/16
G4 N.B.	1	446.59	447.16	447.68	.01	.03	.01	.05	.08	.07	⅞
G1 S.B.	1	446.34	446.92	447.46	.01	.03	.01	.05	.02	.07	⅞
G2 S.B.	1	446.59	447.17	447.71	.02	.08	.02	.12	.02	.14	1 11/16
G3 S.B.	1	446.64	447.22	447.76	.02	.08	.02	.12	.02	.14	1 11/16
G4 S.B.	1	446.44	447.02	447.55	.01	.03	.01	.05	.02	.07	⅞

BRIDGE NO. 2
INTERSTATE ROUTE 481 OVER DEWITT YARDS

SPAN 1 (S.B.&N.B.)

DRAWING NO. 18 OF 50

PROJECT ENGINEER F. Parker
IN CHARGE OF F. Fekel
DESIGNED BY N. Toepsee
DESIGN CHECKED BY R. Talmule
DETAILED BY J.C. Thompson
DETAILS CHECKED BY [illegible]

104
6
3

F.I.S.H. 70-7

FED. RD. REG. NO.	STATE	FEDERAL AID PROJECT NO.	SHEET NO.	TOTAL SHEETS
1	NEW YORK	I-690-3(129) I-481-2(116)	197	309

INTERSTATE ROUTE CONNECTION 570
BUTTERNUT INTERCHANGE (PHASE 2)
ONONDAGA COUNTY

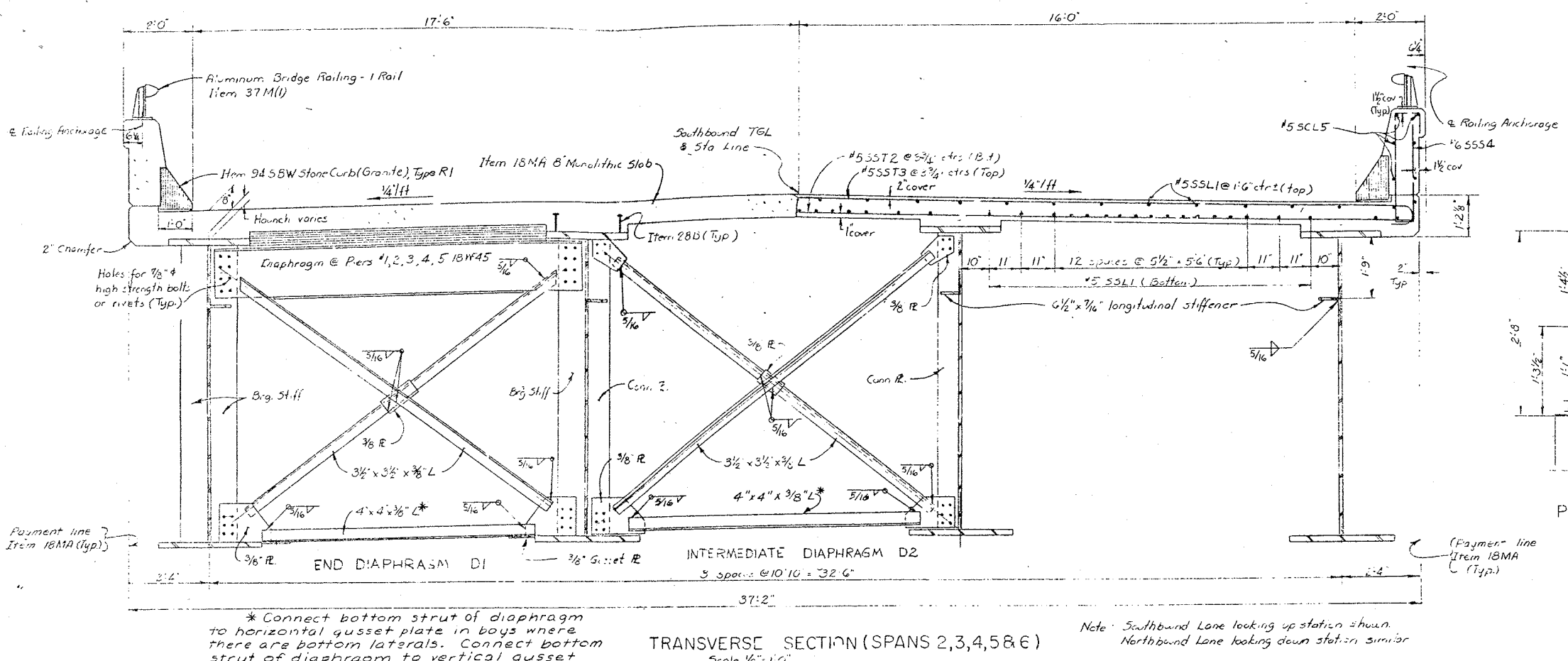

TRANSVERSE SECTION (SPANS 2,3,4,5 & 6)
Scale ½" = 1'-0"

Note: Southbound Lane looking up station shown. Northbound Lane looking down station similar

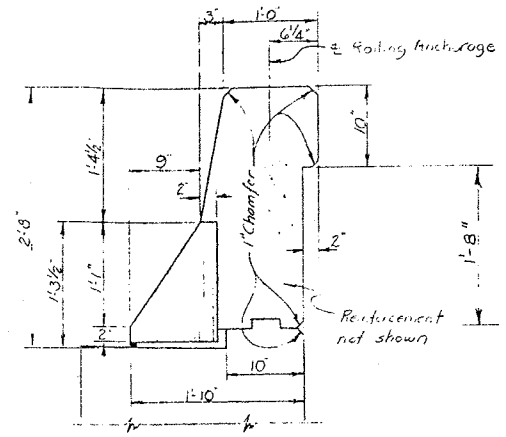

PARAPET DETAIL
Scale 1" = 1'-0"

* Connect bottom strut of diaphragm to horizontal gusset plate in bays where there are bottom laterals. Connect bottom strut of diaphragm to vertical gusset plates in bays where there are no bottom laterals.

or rivets

Note: Holes for ⅞" ϕ high strength bolts may be omitted and welding substituted if the contractor so elects. When the contractor elects to substitute the welded connection for the bolted connection shown, the amount of welding used shall be equivalent in strength to the bolts omitted.

For parapet railing details see drawing no. 35 & 36

For granite curb details see drawing no. 35

Steel meeting the minimum requirements of A.S.T.M. Designation A36 shall be used for all intermediate stiffeners, longitudinal stiffeners, connection plates, bearing stiffeners, diaphragm, bracing, & HM lateral bracing (except gusset plates), straight support angles, finger joint support plates and open armored joint support plates at the south end of span 2.

Finger joint plates, vertical side plates, and deflector plates at finger joints, and armoring angle and side plates at open joint at south end of span 2 shall be corrosion resistant steel A.S.T.M. Designation A 242.

The webs of the girders shall be A.S.T.M. Designation A441.

See details of individual spans for type of steel to be used in girder flanges and bottom lateral gusset plates.



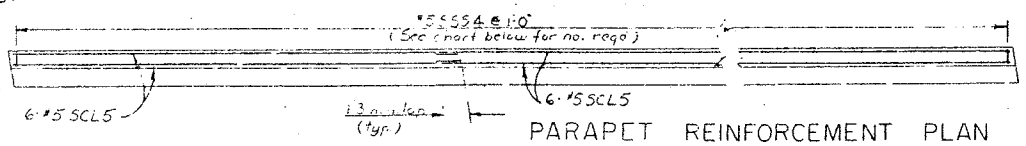

PARAPET REINFORCEMENT PLAN
No Scale

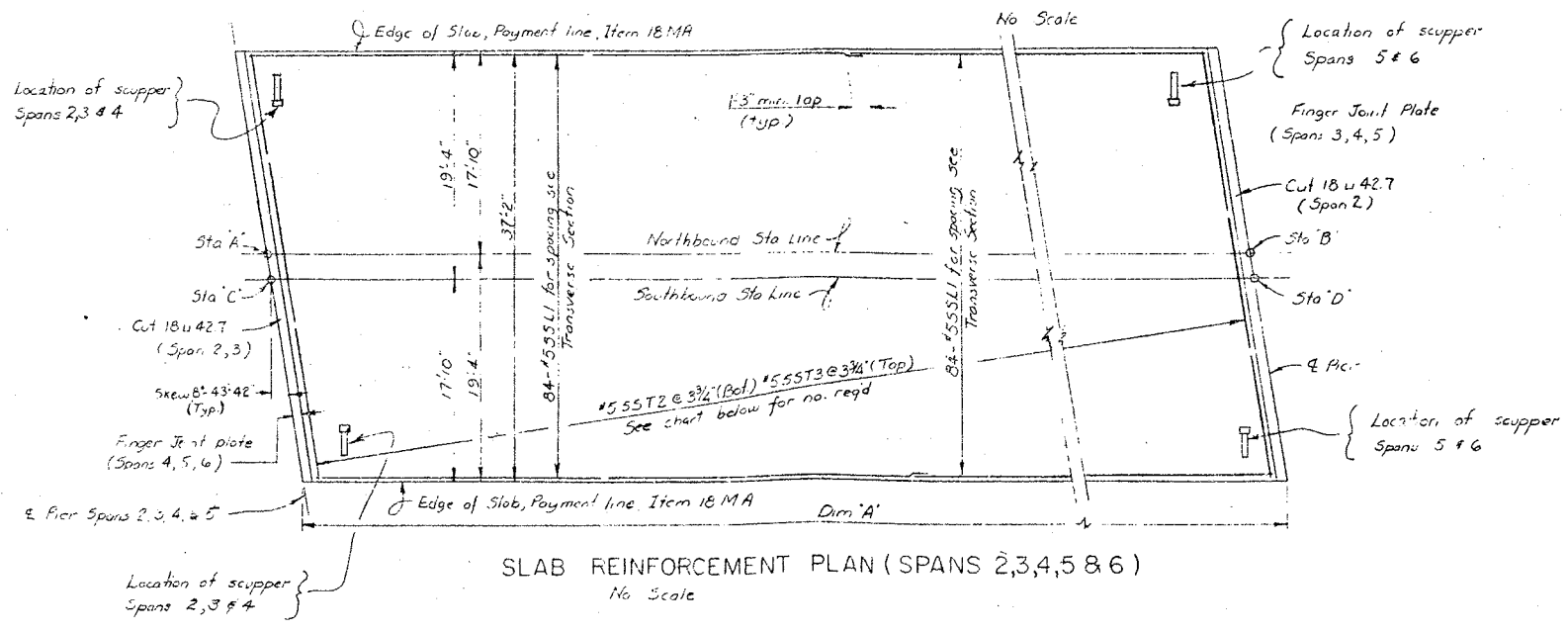

SLAB REINFORCEMENT PLAN (SPANS 2,3,4,5 & 6)
No Scale

SPAN	DIM "A"	STA 'A'	STA 'B'	STA 'C'	STA 'D'	SST2 & SST3 NO. REQ'D	SSS4 NO. REQ'D
2	156'-2" SB & NB	214+81.42	218+37.53	218+32.99	219+89.15	497	157
3	171'-2" SB & NB	218+37.59	220+08.76	219+89.15	221+60.32	544	172
4	198'-0" SB & NB	220+08.76	222+06.76	221+60.32	223+58.32	629	198
5	198'-0" SB & NB	222+06.76	224+04.76	223+58.32	225+56.32	629	198
6	198'-0" SB & NB	224+04.76	226+02.76	225+56.32	227+54.32	629	198

PROJECT ENGINEER E. Farber
IN CHARGE OF E. Farber
DESIGNED BY C. Frank
DESIGN CHECKED BY A. Tarpess
DETAILED BY C.H. Smith
DETAIL CHECKED BY T. Kelly

BRIDGE NO. 2
INTERSTATE ROUTE 481 OVER DEWITT YARDS

TRANSVERSE SECTION & SLAB PLAN
SPANS 2,3,4,5 & 6 NB & SB

DRAWING NO. 19 OF 50

F.I.S.H. 70-7

FED. RD. REG. NO.	STATE	FEDERAL AID PROJECT NO.	SHEET NO.	TOTAL SHEETS
1	NEW YORK	I-690-2(28) I-481-2(11S)	198	302

INTERSTATE ROUTE CONNECTION 690
SUPERIOR ARRANGEMENT (PHASE 2)
ONONDAGA COUNTY

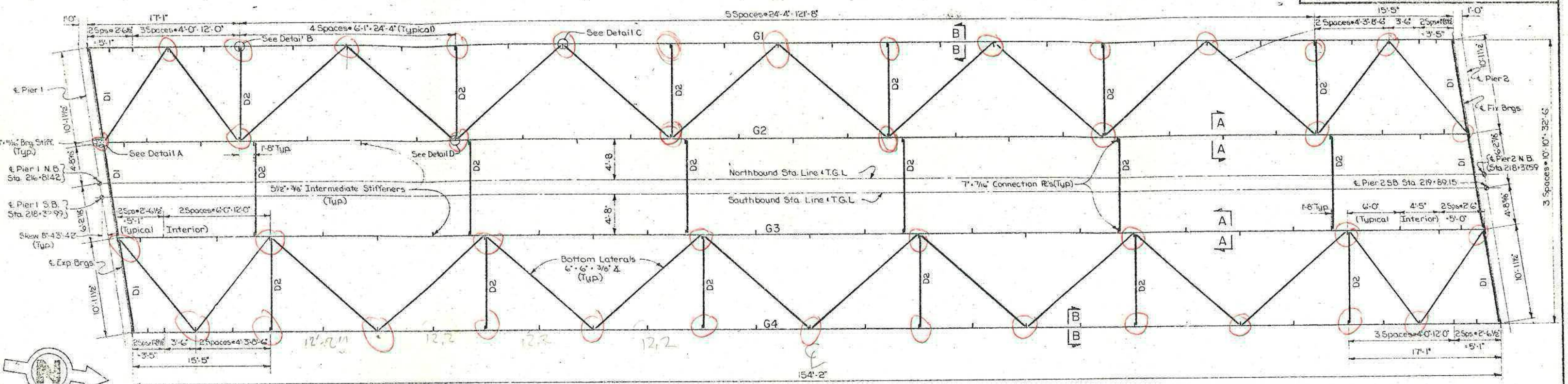

Notes: See Transverse Section for Diaphragms and Lateral Bracing.
See Drawing No. 22 for Cross Lateral Bracing Details A, B, C & D.

STEEL FRAMING PLAN NB & SB
Scale: 3/16" = 1'-0"

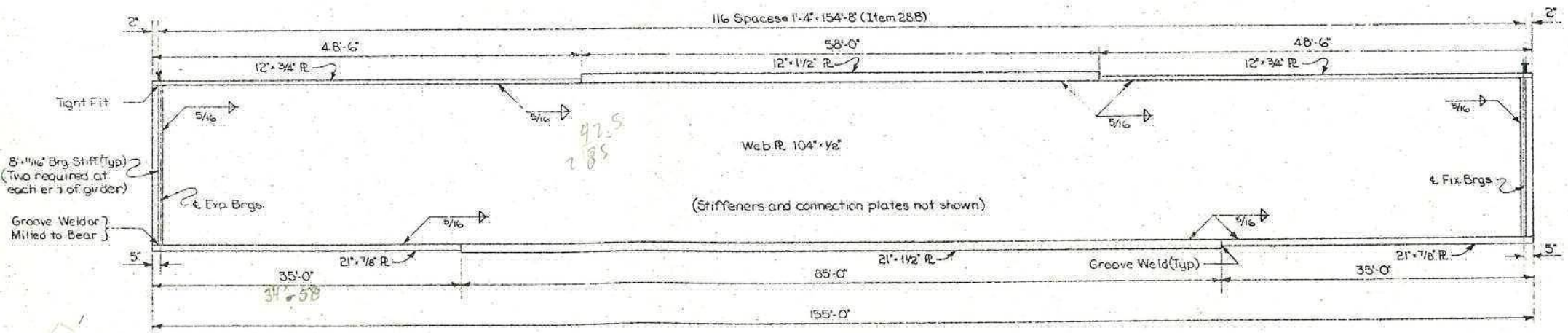

FASCIA & INTERIOR GIRDER ELEVATION NB & SB
Not to Scale

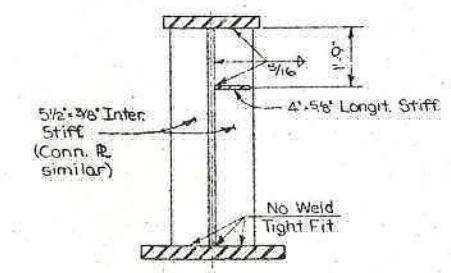

SECTION A-A
Not to Scale

Notes:
Web and flanges shall be A.S.T.M designation A 441 Steel.
Stiffeners, connection plates, diaphragms, lateral bracing and gusset plates shall be A.S.T.M. designation A36 Steel.
For details of bearings see Dwg. No. 42 & 43.
Stud Shear Connectors shall be 6" high.

GIRDER	SPAN	THEO. BOTTOM OF SLAB ELEVATIONS ℄ EXP BRGS	℄ SPAN	℄ FIX BRGS	DEFLECTIONS (FT.) STEEL	SLAB	SDL	TOT.	CAMBER V.C.C (FT.)	TOTAL (FT.)	(IN.)
G1 NB	2	447.67	448.52	449.23	.08	.16	.07	.31	.07	.38	4 5/16
G2 NB	2	447.92	448.76	449.47	.08	.24	.07	.39	.07	.46	5 ½
G3 NB	2	447.91	448.75	449.45	.08	.24	.07	.39	.07	.46	5 ½
G4 NB	2	447.70	448.54	449.24	.08	.16	.07	.31	.07	.38	4 5/16
G1 SB	2	447.48	448.35	449.08	.08	.16	.07	.31	.07	.38	4 5/16
G2 SB	2	447.73	448.60	449.32	.08	.24	.07	.39	.07	.46	5 ½
G3 SB	2	447.78	448.65	449.37	.08	.24	.07	.39	.07	.46	5 ½
G4 SB	2	447.58	448.44	449.16	.08	.16	.07	.31	.07	.38	4 5/16

V.C.C - Vertical Curve Correction
S.D.L. - Superimposed Dead Load, includes weight of railing.

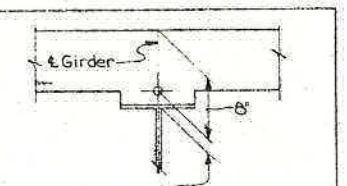

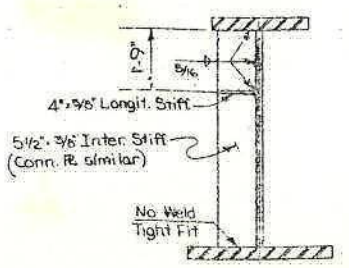

SECTION B-B
Not to Scale

PROJECT ENGINEER R. L. Parker
IN CHARGE OF F. Eckel
DESIGNED BY N. A. Tsoses
DESIGN CHECKED BY R. Thimble
DETAILED BY J. F. Darcy
FINAL CHECKED BY [illegible]

BRIDGE NO. 2
INTERSTATE ROUTE 381 OVER DEWITT YARDS

SPAN 2 FRAMING PLAN

DRAWING NO. 20 OF 50

F.I.S.H. 70-7

FED. RD. REG. NO.	STATE	FEDERAL AID PROJECT NO.	SHEET NO.	TOTAL SHEETS
1	NEW YORK	I-690-3(28) I-481-2(116)	199	309

INTERSTATE ROUTE CONNECTION 570
BUTTERNUT INTERCHANGE (PHASE 2)
ONONDAGA COUNTY

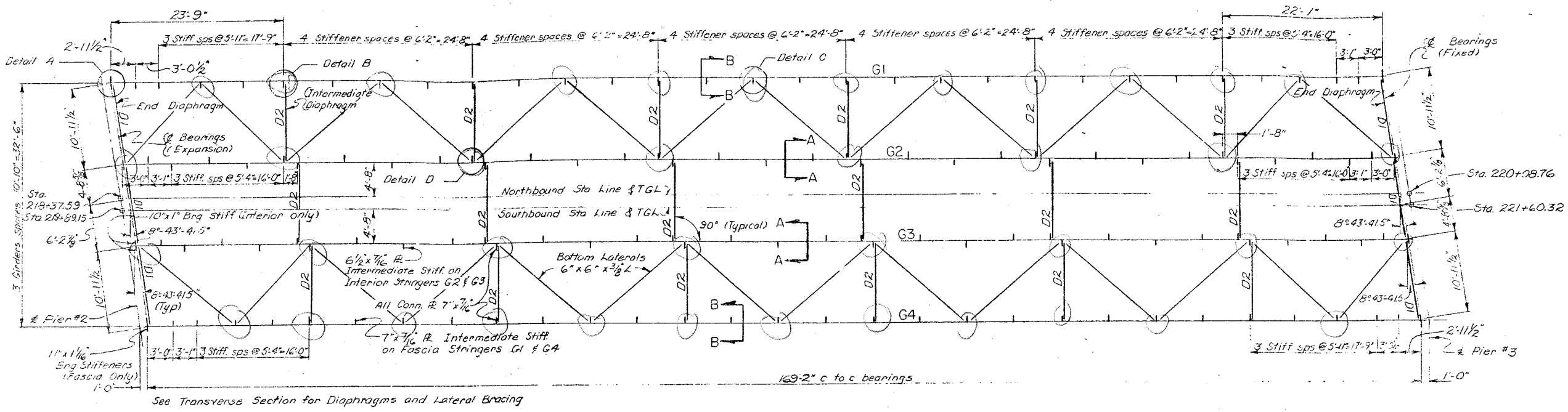

STEEL LAYOUT (SPAN #3 NB & SB)
Scale ⅛" = 1'-0"

Note: Stud Shear Connectors shall be 6" high.

For Bearings Details see Drawing # 42 and 43
For Joint Details see Drawing # 31
For Trough Details see Drawing # 39

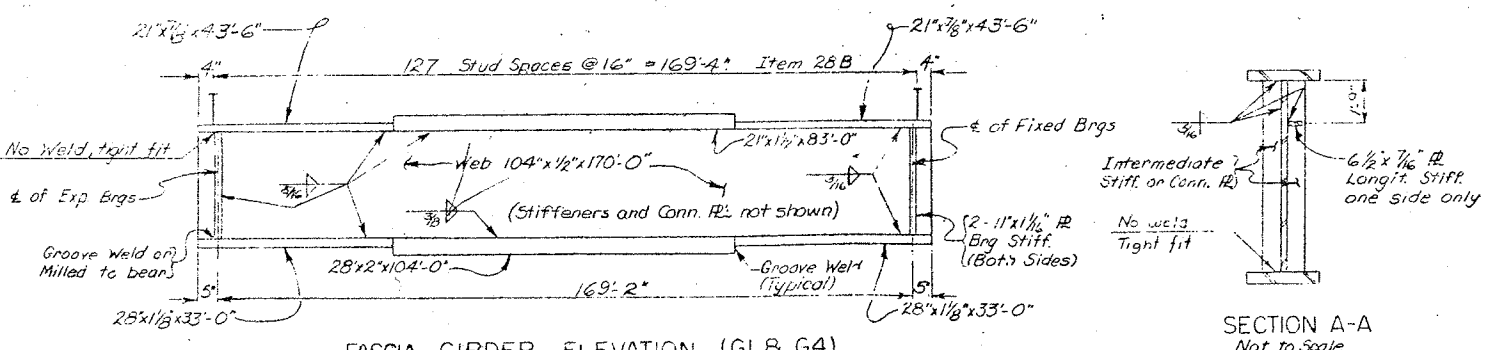

FASCIA GIRDER ELEVATION (G1 & G4)
Not to Scale

SECTION A-A
Not to Scale
Note: All Conn. Plates 7"x7/16"

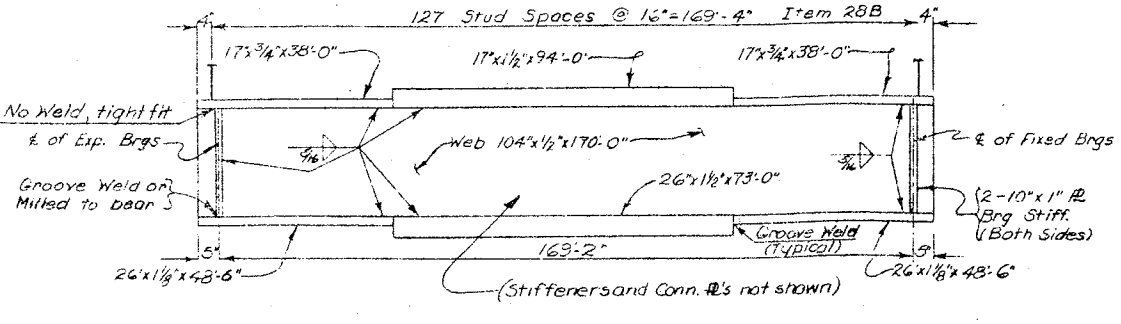

INTERIOR GIRDER ELEVATION (G2 & G3)
Not to Scale

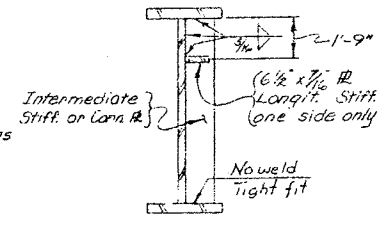

SECTION B-B
Not to Scale
Note: All Conn. Plates 7"x7/16"

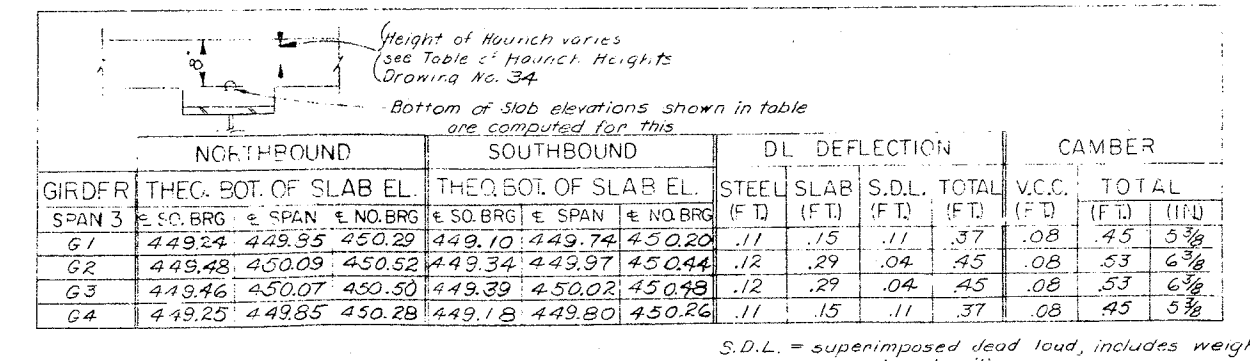

GIRDER	NORTHBOUND			SOUTHBOUND			DL DEFLECTION				CAMBER		
	THEO. BOT. OF SLAB EL.			THEO. BOT. OF SLAB EL.			STEEL	SLAB	S.D.L.	TOTAL	V.C.C.	TOTAL	
SPAN 3	℄ SO. BRG	℄ SPAN	℄ NO. BRG	℄ SO. BRG	℄ SPAN	℄ NO. BRG	(FT.)	(FT.)	(FT.)	(FT.)	(FT.)	(FT.)	(IN.)
G1	449.24	449.95	450.29	449.10	449.74	450.20	.11	.15	.11	.37	.08	.45	5⅜
G2	449.48	450.09	450.52	449.34	449.97	450.44	.12	.29	.04	.45	.08	.53	6⅜
G3	449.46	450.07	450.50	449.39	450.02	450.48	.12	.29	.04	.45	.08	.53	6⅜
G4	449.25	449.85	450.28	449.18	449.80	450.26	.11	.15	.11	.37	.08	.45	5⅜

S.D.L. = superimposed dead load, includes weight of parapet and railing.
V.C.C. = vertical curve correction

Top of Bottom Flange when bottom flange is in tension
Bottom of Top Flange when top flange is in tension

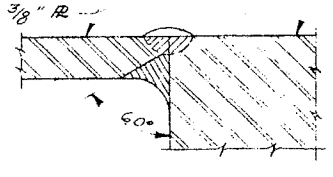

DETAIL "1

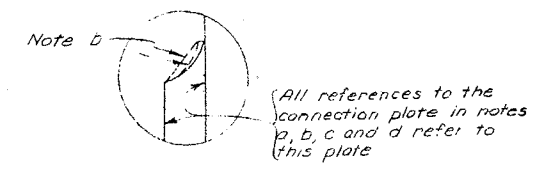

DETAIL "2

Note:
a. The connection plate shall be prepared and welded as a single bevel groove weld as shown in Detail #1. It shall then be Air Carbon-Arc gauged from the second side into sound weld metal and then welded as detailed. All welding shall be in the flat or "downhand" position.
b. The plate may be of any shape that will provide often welding, cutting, and finish grinding a smooth transition from the flange edge at a minimum radius of 12".
c. Both the connection plate and flange are to be the same type of steel.
d. Field welding to the connection plate will not be permitted.

LATERAL BRACING DETAILS
Not to Scale

The webs, flanges and gusset plates for bottom lateral bracing for the Span 3 girders shall be A.S.T.M. Designation A441 steel. Stiffeners, diaphragms, bearings, and bottom lateral bracing (except gusset plates) shall be A.S.T.M. A36 steel.

For additional details of bottom lateral bracing see drawing No. 22

PROJECT ENGINEER A. PARKER
IN CHARGE OF E.D. ECKEL
DESIGNED BY C. FANE
DESIGN CHECKED BY K. JENSEN
DETAILED BY THE Dunrel
DETAIL CHECKED BY Carl Smith

BRIDGE NO. 2
INTERSTATE ROUTE 481 OVER DEWITT YARDS

SPAN 3

DRAWING NO. 21 OF 30

F.I.S.H. 70-7

FED. RD. REG. NO.	STATE	FEDERAL AID PROJECT NO.	SHEET NO.	TOTAL SHEETS
1	NEW YORK	I-490-8(28) I-481-2(116)	200	309

INTERSTATE ROUTE 490 CONNECTION 870
EASTERN BYPASSING (PHASE 2)
ONONDAGA COUNTY

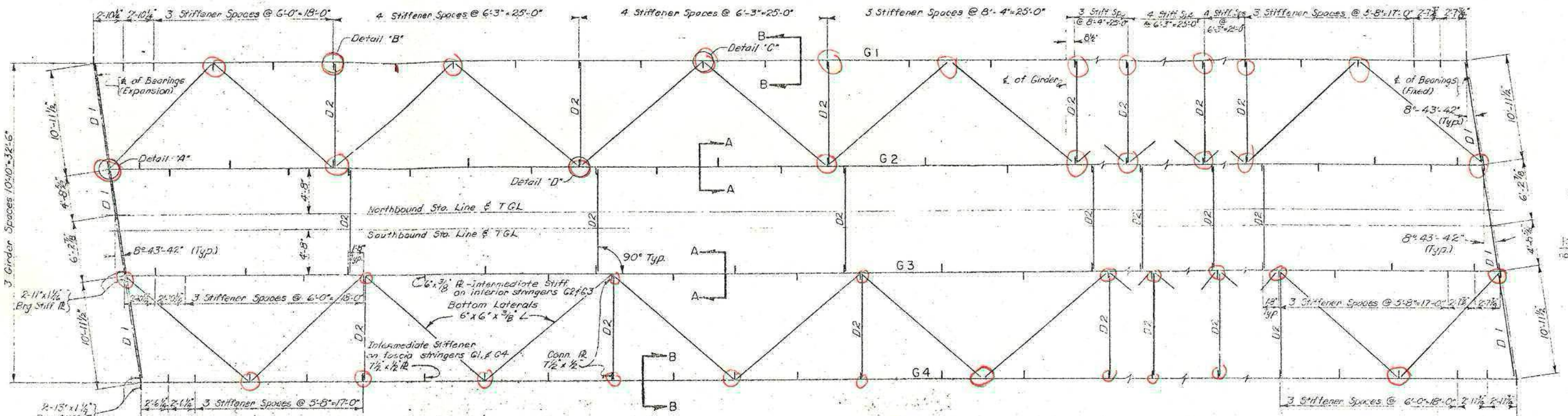

STEEL LAYOUT — SPANS 4,5 & 6 (NB & SB)
Scale: 3/16"=1'-0"

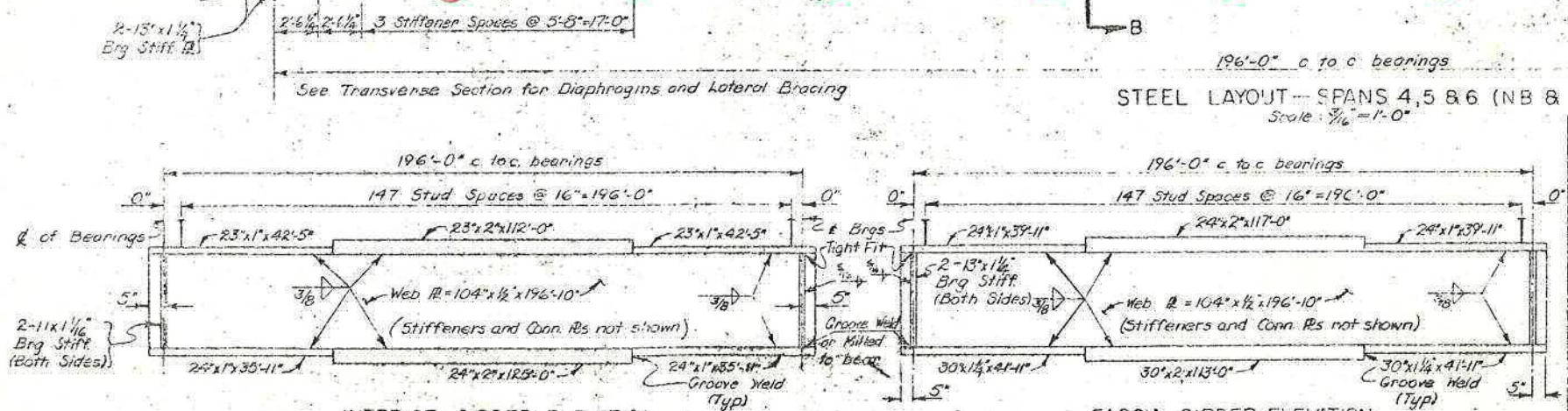

INTERIOR GIRDER ELEVATION
Not to Scale

FASCIA GIRDER ELEVATION
Not to Scale

GIRDER	SOUTHBOUND THEO. BOT. OF SLAB EL. ℄ SO. BRG	℄ SPAN	℄ NO. BRG	NORTHBOUND THEO. BOT. OF SLAB EL. ℄ SO. BRG	℄ SPAN	℄ NO. BRG	DL DEFLECTION (FT) STEEL	SLAB	SDL	TOTAL DL	CAMBER VCC(FT)	TOTAL FEET	TOTAL INCHES
SPAN 4													
G1	450.21	450.54	450.63	450.30	450.53	450.66	0.172'	0.212'	0.168'	0.552'	0.113'	0.665'	8"
G2	450.45	450.77	450.86	450.53	450.82	450.89	0.178'	0.378'	0.062'	0.618'	0.113'	0.731'	8 13/16"
G3	450.48	450.80	450.89	450.51	450.80	450.85	0.178'	0.378'	0.062'	0.618'	0.113'	0.731'	8 13/16"
G4	450.27	450.58	450.67	450.29	450.57	450.63	0.172'	0.212'	0.168'	0.552'	0.113'	0.665'	8"
SPAN 5													
G1	450.63	450.30	450.14	450.66	450.30	450.10	0.172'	0.212'	0.165'	0.552'	0.113'	0.665'	8"
G2	450.86	450.72	450.36	450.89	450.72	450.32	0.178'	0.378'	0.062'	0.618'	0.113'	0.731'	8 13/16"
G3	450.89	450.75	450.39	450.85	450.68	450.28	0.178'	0.378'	0.062'	0.618'	0.113'	0.731'	8 13/16"
G4	450.66	450.52	450.15	450.63	450.45	450.05	0.172'	0.212'	0.168'	0.552'	0.113'	0.665'	8"
SPAN 6													
G1	450.13	449.54	448.72	450.09	449.47	448.62	0.172'	0.212'	0.168'	0.552'	0.113'	0.665'	8"
G2	450.35	449.75	448.93	450.31	449.68	448.83	0.178'	0.378'	0.062'	0.618'	0.113'	0.731'	8 13/16"
G3	450.37	449.77	448.94	450.27	449.64	448.78	0.178'	0.378'	0.062'	0.618'	0.113'	0.731'	8 13/16"
G4	450.16	449.53	448.70	450.04	449.40	448.54	0.172'	0.212'	0.168'	0.552'	0.113'	0.665'	8"

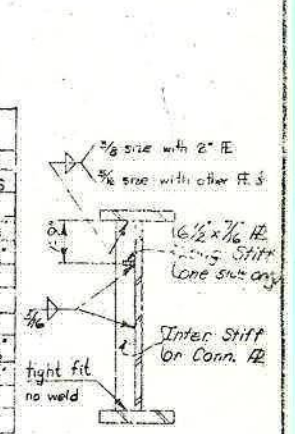

SECTION B-B
Not to Scale

SPANS 4, 5 & 6

1. The steel in the flanges and gusset plates for bottom lateral bracing shall be A.S.T.M. Designation A441 Modified.
2. The steel in the webs of the girders shall be A.S.T.M. Designation A441.
3. The steel in the stiffeners, diaphragms, bearings, and bottom lateral bracing (except gusset plates) shall be A.S.T.M. Designation A36.

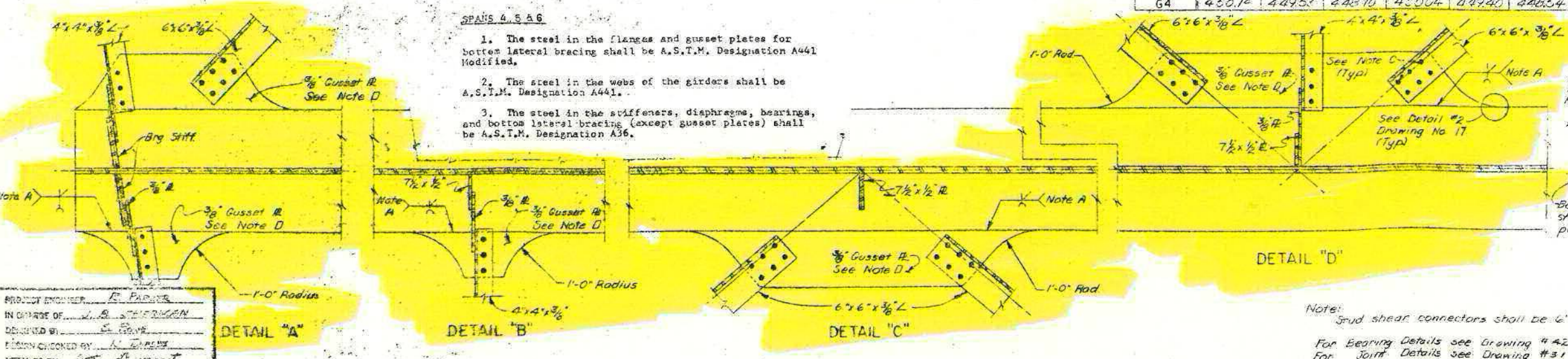

Height of Haunch varies see Table of Haunch Hgts Drg No 34

℄ Girder

Bottom of slab elevations shown in table are computed for this point.

Note:
Stud shear connectors shall be 6" high

For Bearing Details see Drawing # 42 and #43
For Joint Details see Drawing #31
For Trough Details see Drawing #33

Note:
A. The connection plate shall be prepared and welded as a single bevel groove weld as shown in Detail #1. It shall then be Air Carbon-Arc gouged from the second side into sound weld metal and then welded as detailed. All welding shall be in the flat or "downhand" position.
B. The plate may be of any shape that will provide after welding, cutting, and finish grinding a smooth transition from the flange edge of a minimum radius of 12".
C. Lateral bracing shall be attached to gusset plates with ⅞" ø high strength bolts. Field welding will not be permitted.
D. The gusset plate shall be the same type of steel as the flange to which it is welded.

PROJECT ENGINEER F. PARKER
IN CHARGE OF W. B. STEPHENSON
DESIGNED BY S. FOWLE
DESIGN CHECKED BY M. DANEVE
APPROVED BY [illegible]
DRAWN BY D.H. Smith

BRIDGE NO. 2
INTERSTATE ROUTE 481 OVER DEWITT YARDS
SPANS 4,5 & 6
DRAWING NO. 22 OF 50

F.I.S.H. 70-7

FED. RD. REG. NO.	STATE	FEDERAL AID PROJECT NO.	SHEET NO.	TOTAL SHEETS
1	NEW YORK	I-690-3(28) I-481-2(16)	201	309

INTERSTATE ROUTE CONNECTION 570
DEWITT INTERCHANGE (PHASE 2)
ONONDAGA COUNTY

Aluminum Bridge Railing - I Rail
(Item 31 M(1))

Item 28B, Stud Shear Connectors

#555L1 bottom (Typ.)

8" Monolithic Slab
Item 18MA

Granite Curb, Item 945BW
Type R1

#555T3 @ 3¾" ctrs (top)
#555T2 @ 3¾" ctrs (bottom)

varies (southbound)
⅛"/ft (northbound)

Southbound T.G.L.
℄ Sta. Line

12-Spaces @ 6½" = 5'-6"

8 - Equal spaces @ 1'-6" ± ctrs = 10'-10"

#555L1 lap (Typ.)

2" Min. haunch, varies
¼"/ft (southbound)
Varies (northbound)

#555L1

2" Cover

1" Cover

℄ Railing Anchorage

#55CL5

#555S4 @ 1'-0" ctrs

1½" Cover (Typ)

1'-2⅛" SB
varies NB

℄ Railing Anchorage
Item IB

1" Chamfer (Typ.)

1'-2⅛" NB
varies SB

2" Chamfer

Holes for ⅞" ϕ high strength bolts or rivets (Typ.)

18 WF 45

Brg Stiff.

Conn PL

L 3½ x 3½ x ⅜

L 4 x 4 x ⅜

104" web depth

Payment line (Item 18MA (Typ.))

END DIAPHRAGM—D3

INTERMEDIATE DIAPHRAGM—D4

END DIAPHRAGM—D5

2'-0" | 17'-6" | 16'-0" | 2'-0"

2'-4" | 3 Spaces @ 10'-10" = 32'-6" | 2'-4"

37'-2"

Note: S.B. looking upstation.
N.B. looking downstation.

TRANSVERSE SECTION - SPANS 7, 8 AND 9
Scale: ½" = 1'-0"

Note: Holes for ⅞" ϕ high strength bolts or rivets may be omitted and welding substituted if the contractor so elects. When the contractor elects to substitute the welded connection for the bolted connection shown, the amount of welding used shall be equivalent in strength to the bolts omitted.

For detail of Railing see Drawing #36

℄ Railing Anchorage

Reinforcement not shown

1'-0" | 6¼" | 10" | 9" | 2" | 1" Chamfer | 1'-1" | 1'-10"

PARAPET DETAIL
Scale 1" = 1'-0"

3⅛" | 1'-1" | 2'-8"

3⅛" | 66 web depth | web depth varies

3/8" PL | 5/16 | L 3½ x 3½ x ⅜ | Conn PL | L 4 x 4 x ⅜ | ℄ interior girder | ℄ fascia girder | 10'-10"

INTERMEDIATE DIAPHRAGM-D6
Scale: ½" = 1'-0"

8⅞" | ℄ of Pier | ℄ of Expansion Bearing | 9" | Step | 1'-3" min. lap (Typ.) | Edge of slab, pay line Item 18MA (Typ.) | Location of Scupper | ℄ of Fixed Bearing

Edge of Slab

Sta. 226 + 02.76 — Span 7
Sta. 227 + 26.76 — Span 8
Sta. 228 + 50.76 — Span 9

(Top & Bottom) See Transverse Section for location

N.B. T.G.L. and sta. line ℄

S.B. T.G.L. and sta. line

Sta. 227 + 54.32 -- Span 7
Sta. 228 + 78.32 — Span 8
Sta. 230 + 02.32 — Span 9

84 Bars - #555L1

17'-10" | 37'-2" | 17'-10"

390 Bars - #555T2 @ 3¾" Ctr's (Bottom)

390 Bars - #555T3 @ 3¾" Ctr's (Top)

Sta. 227 + 26.76 — Span 7
Sta. 228 + 50.76 — Span 8
Sta. 229 + 74.76 — Span 9

Sta. 228 + 78.32 — Span 7
Sta. 230 + 02.32 — Span 8
Sta. 231 + 26.32 — Span 9

8° 43'-42" Skew

Edge of Slab

℄ of Pier

9" | 8⅞" | Location of Scupper

Edge of slab, pay line Item 18MA | 122'-6" c. to c bearings

SLAB REINFORCEMENT PLAN, SPANS 7, 8 AND 9
Scale: 3/16" = 1'-0"

Note
Transverse reinforcement shall be placed parallel to skew.

6 Bars - #55CL5 | 6 Bars - #55CL5 | 6 Bars - #55CL5

1'-3" min. lap (Typical)

124 Bars - #555S4 @ 1'-0" Ctr's

PARAPET REINFORCEMENT PLAN
Not to Scale

PROJECT ENGINEER K. FASKER
IN CHARGE OF W. G. SHERMAN
DESIGNED BY C. Kaus
DESIGN CHECKED BY L. Tepper
DETAILED BY G. Sivunenko
DETAIL CHECKED BY [illegible]

BRIDGE NO. 2
INTERSTATE ROUTE 481 OVER DEWITT YARDS

SPANS 7, 8 & 9

DRAWING NO. 23 OF 30

F.I.S.H. 70-7

FED. RD. REG. NO.	STATE	FEDERAL AID PROJECT NO.	SHEET NO.	TOTAL SHEETS
I	NEW YORK	I-580-3(28) I-481-2(116)	202	309

INTERSTATE ROUTE CONSTRUCTION 970
INTERCHANGE (FORM 2)
ONONDAGA COUNTY

TABLE OF STATIONS				
SPAN	STA. A	STA. B	STA. C	STA. D
7	226+02.76	227+54.32	227+26.76	228+78.32
8	227+26.16	228.78.32	228+50.76	230+02.32
9	228+50.76	230.02.32	229+74.76	231+26.32

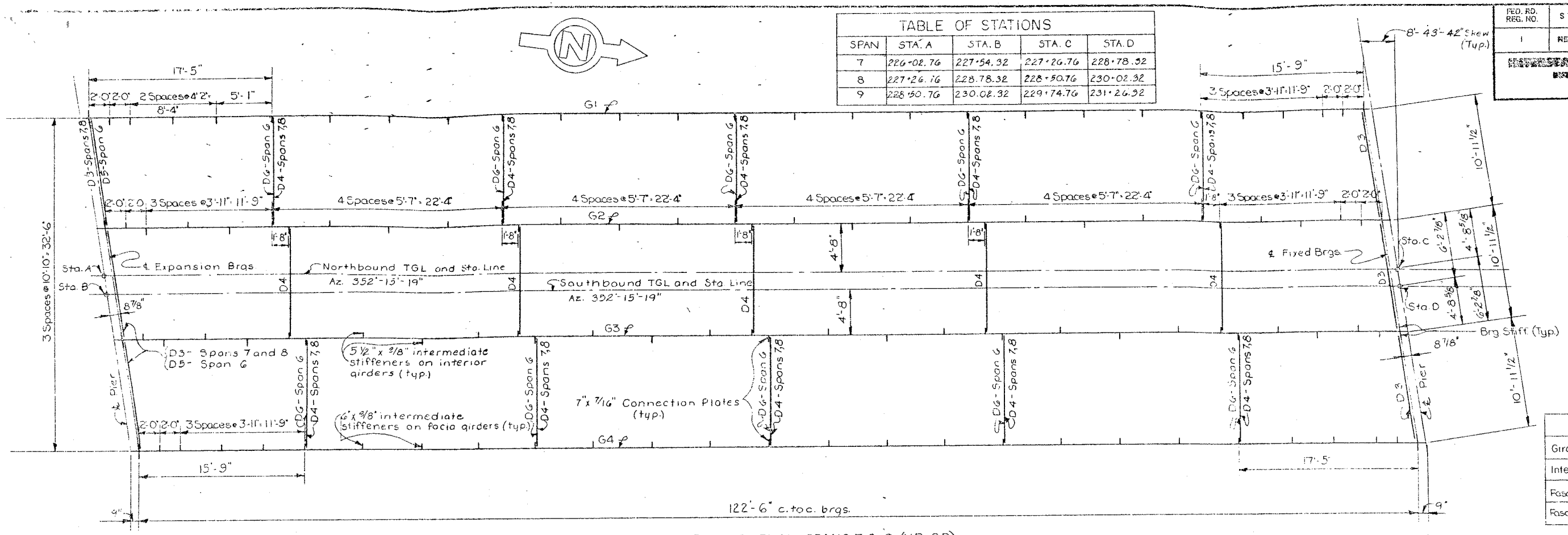

STEEL FRAMING PLAN SPANS 7, 8 & 9 (NB & SB)
Scale: 3/16" = 1'-0"

BEARING STIFFENER SIZES	
Girder	Size of each plate (2 plates @ each end of girder)
Interior spans 7,8 & 9	8" X 3/4".
Fascia span 7	8" X 3/4"
Fascia spans 8 & 9	9" X 7/8"

Steel in the girder webs and flanges shall be A.S.T.M. Designation A441 steel.
Steel in the stiffeners and diaphragms shall be A.S.T.M. Designation A36 steel.

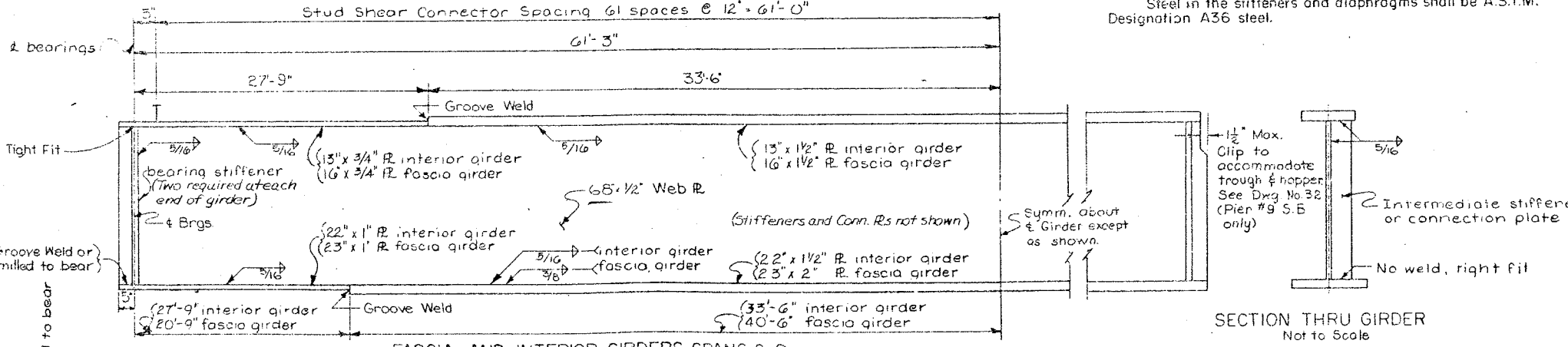

SECTION THRU GIRDER
Not to Scale

FASCIA AND INTERIOR GIRDERS SPANS 8 & 9
INTERIOR GIRDERS--SPAN 7
Not to Scale

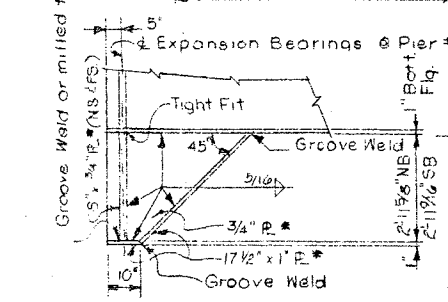

DETAIL AT SOUTH END OF INTERIOR STRINGERS--SPAN 7
Scale 3/8" = 1'-0"
* 441 Steel

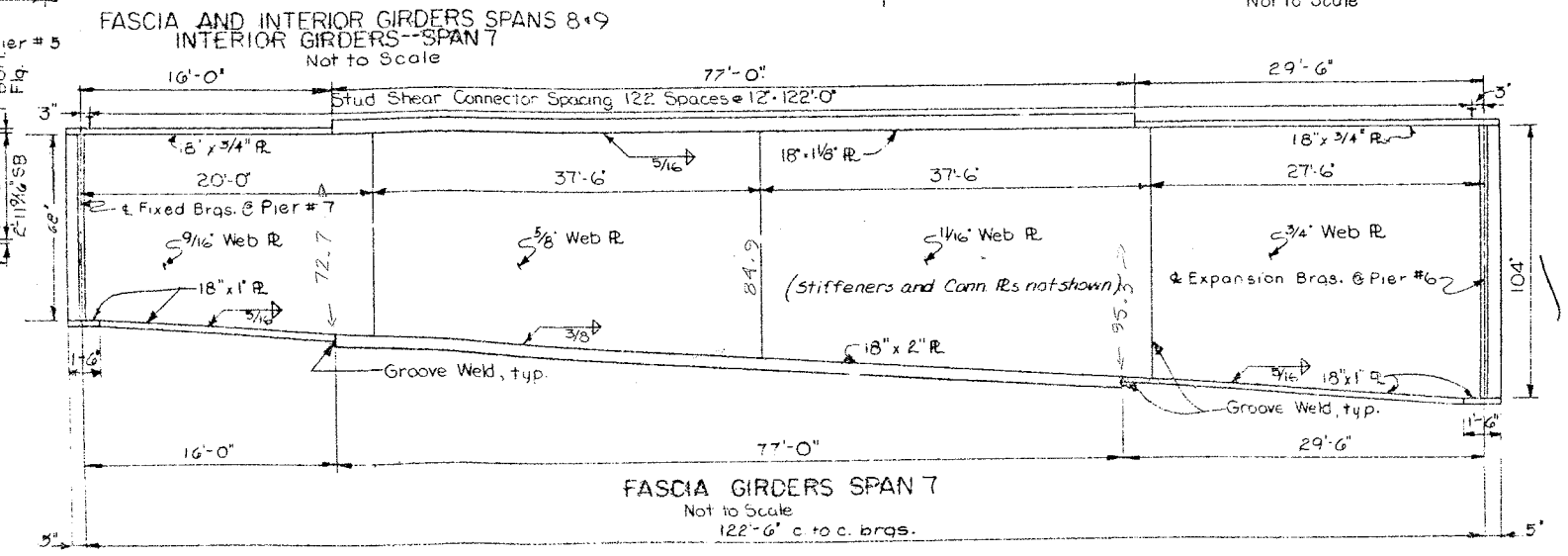

FASCIA GIRDERS SPAN 7
Not to Scale
122'-6" c. to c. brgs.

BOTTOM OF SLAB ELEVATIONS										
NORTHBOUND						SOUTHBOUND				
GIRDER	SPAN	℄ EXP BRGS	℄ SPAN	℄ FIX BRGS.		GIRDER	SPAN	℄ EXP BRGS.	℄ SPAN	℄ FIX BRGS.
G1	7	448.60	447.95	447.22		G1	7	448.70	448.07	447.35
G2	7	448.61	448.16	447.42		G2	7	448.91	448.28	447.56
G3	7	448.77	448.11	447.37		G3	7	448.93	448.29	447.57
G4	7	448.52	447.87	447.12		G4	7	448.68	448.05	447.32
G1	8	447.20	446.37	445.45		G1	8	447.33	446.52	445.63
G2	8	447.40	446.57	445.65		G2	8	447.54	446.73	445.83
G3	8	447.35	446.52	445.59		G3	8	447.55	446.73	445.83
G4	8	447.10	446.27	445.34		G4	8	447.30	446.48	445.58
G1	9	445.43	444.42	443.33		G1	9	445.60	444.61	443.67
G2	9	445.63	444.62	443.58		G2	9	445.80	444.81	443.74
G3	9	445.57	444.56	443.46		G3	9	445.81	444.81	443.73
G4	9	445.32	444.30	443.20		G4	9	445.56	444.56	443.48

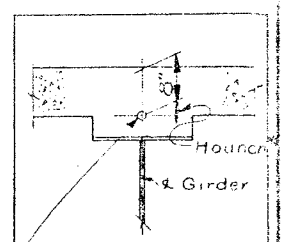

Bottom of Slab Elevations shown in table are computed for this point.

*Height of Haunch varies See Table of Haunch Heights on Drawing No. 34

		DEFLECTIONS				CAMBER		
	GIRDER	SPAN	STEEL (FT.)	SLAB (FT.)	SDL. (FT.)	TOTAL (FT.)	VCC (FT.)	TOTAL (FT.) (IN.)
NB AND SB	G1	7	.05	.09	.06	.20	.04	.24 (2 7/8)
	G2	7	.08	.24	.03	.35	.04	.31 (3 5/8)
	G3	7	.08	.24	.03	.35	.04	.39 (4 5/8)
	G4	7	.05	.09	.06	.20	.04	.24 (2 7/8)
	G1	8	.07	.12	.08	.27	.04	.31 (3 3/4)
	G2	8	.08	.24	.03	.35	.04	.39 (4 5/8)
	G3	8	.08	.24	.03	.35	.04	.39 (4 5/8)
	G4	8	.07	.12	.08	.27	.04	.31 (3 3/4)
SB	G1	9	.07	.12	.08	.27	.02	.29 (3 1/2)
	G2	9	.08	.24	.03	.35	.03	.38 (4 1/2)
	G3	9	.08	.24	.03	.35	.04	.39 (4 5/8)
	G4	9	.07	.12	.08	.27	.04	.31 (3 3/4)
NB	G1	9	.07	.12	.08	.27	-.06	.21 (2 1/2)
	G2	9	.08	.24	.03	.35	.01	.36 (4 3/8)
	G3	9	.08	.24	.03	.35	.04	.39 (4 5/8)
	G4	9	.07	.12	.08	.27	.04	.31 (3 3/4)

V.C.C. = Vertical Curve Camber
S.D.L. = Superimposed dead load, includes the weight of sidewalk & railing.

PROJECT ENGINEER R. L. Parker
IN CHARGE OF J. B. Sherman
DESIGNED BY [illegible]
DESIGN CHECKED BY [illegible]
DETAILED BY J. F. Darcy & N. L. Gallup
DETAIL CHECKED BY [illegible]

BRIDGE NO. 2
INTERSTATE ROUTE 481 OVER DEWITT YARDS
SPANS 7, 8 & 9 (NB & SB)
2939
DRAWING NO. 24 OF 56

F.I.S.H. 70-7

FED. RD. REG. NO.	STATE	FEDERAL AID PROJECT NO.	SHEET NO.	TOTAL SHEETS
1	NEW YORK	I-690-3(28) I-481-2(116)	203	309

INTERSTATE ROUTE CONNECTION 570
BUTTERNUT INTERCHANGE (STAGE 2)
ONONDAGA COUNTY

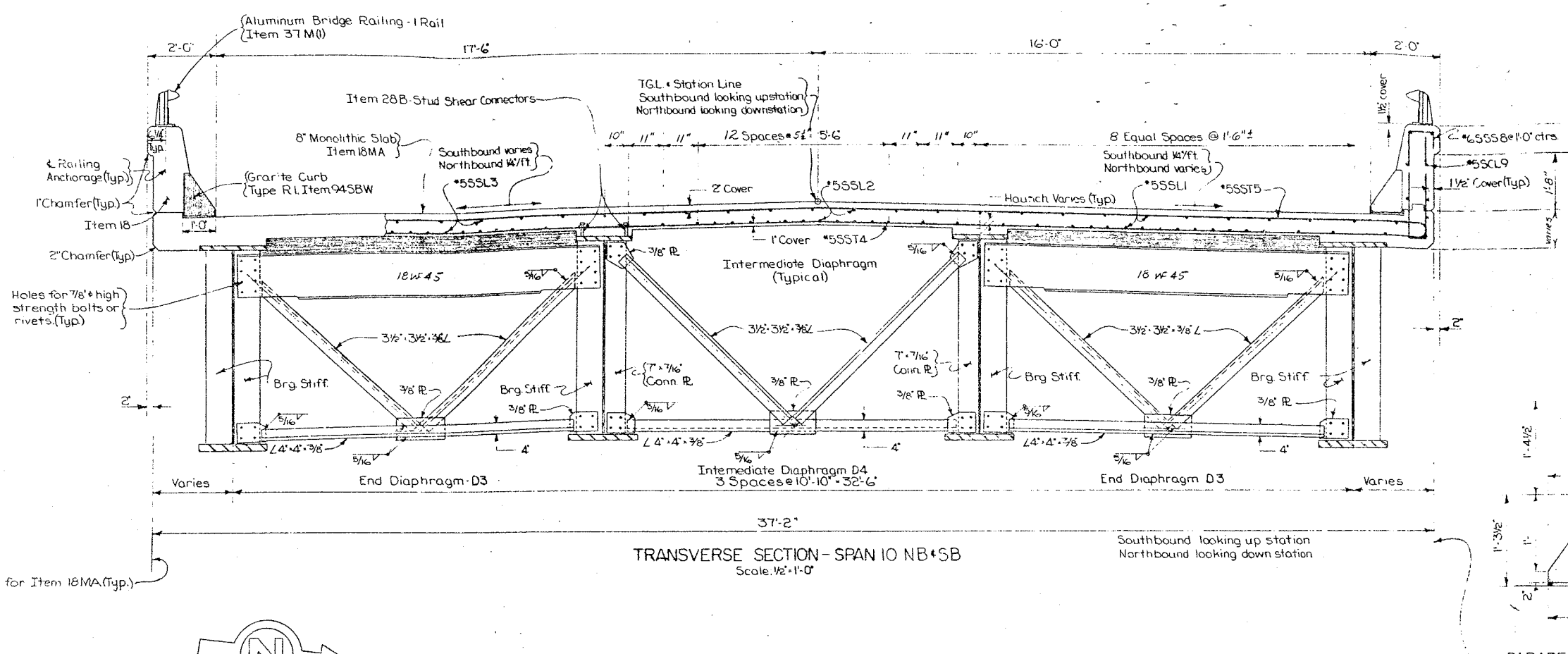

Notes: Holes for 7/8" ϕ rivets or high strength bolts may be omitted and welding substituted if the Contractor so elects. When the Contractor elects to substitute the welded connection for the bolted connection shown, the amount of welding used shall be equivalent in strength to the bolts removed.
For details of railing see Dwg No. 36 .

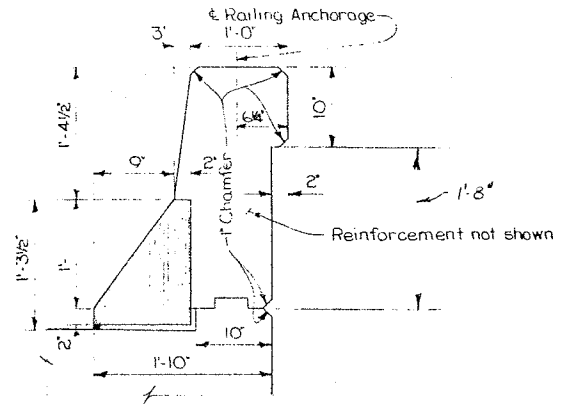

PARAPET SECTION
Scale: 1" = 1'-0"

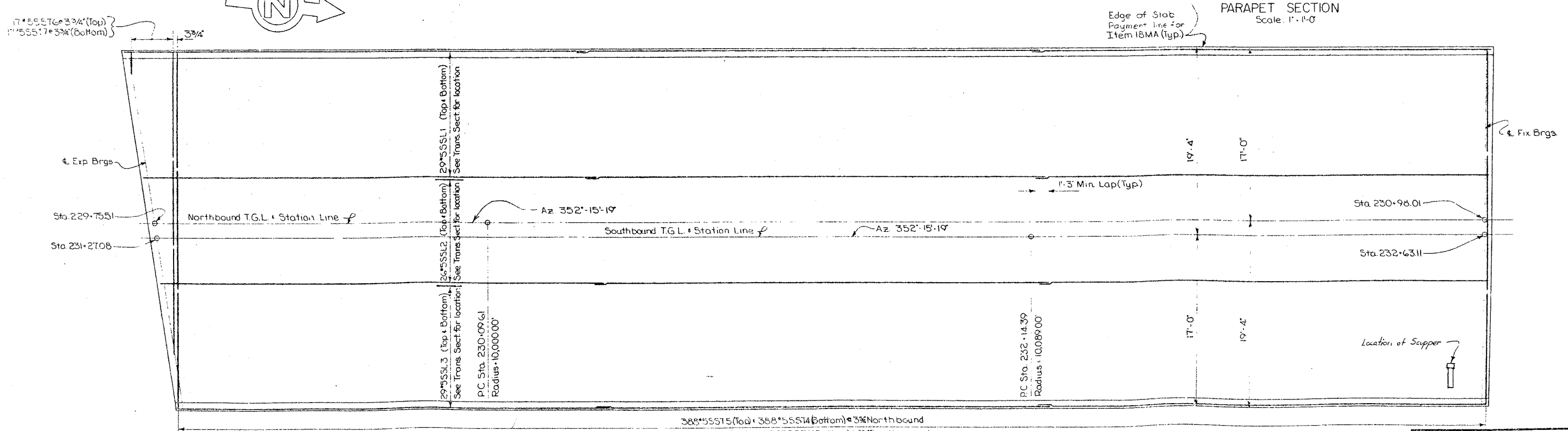

SLAB REINFORCEMENT PLAN - SPAN 10 NB ℄ SB
Scale: 3/16" = 1'-0"

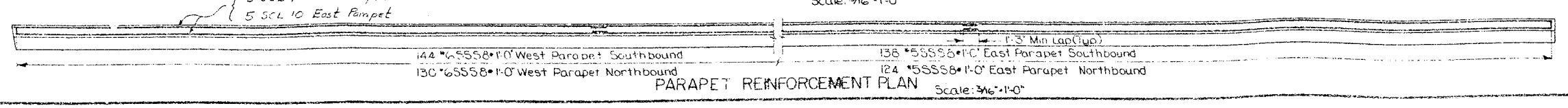

PARAPET REINFORCEMENT PLAN
Scale: 3/16" = 1'-0"

PROJECT ENGINEER E. L. Packer
IN CHARGE OF F. Eckel
DESIGNED BY E. Pawar
DESIGN CHECKED BY N. Tsipsis
DETAILED BY J. F. Darcy
DETAIL CHECKED BY [illegible]

BRIDGE NO. 2
INTERSTATE ROUTE 481 OVER DEWITT YARDS

SPAN 10 NB ℄ SB

DRAWING NO. 25 OF [illegible]

F.I.S.H. 70-7

FED. RD. REG. NO.	STATE	FEDERAL AID PROJECT NO.	SHEET NO.	TOTAL SHEETS
I	NEW YORK	I-690-3(28) I-481-2(16)	204	509

INTERSTATE ROUTE CONNECTION 690
BUTTERNUT (JUNCTION) (PHASE 2)
ONONDAGA COUNTY

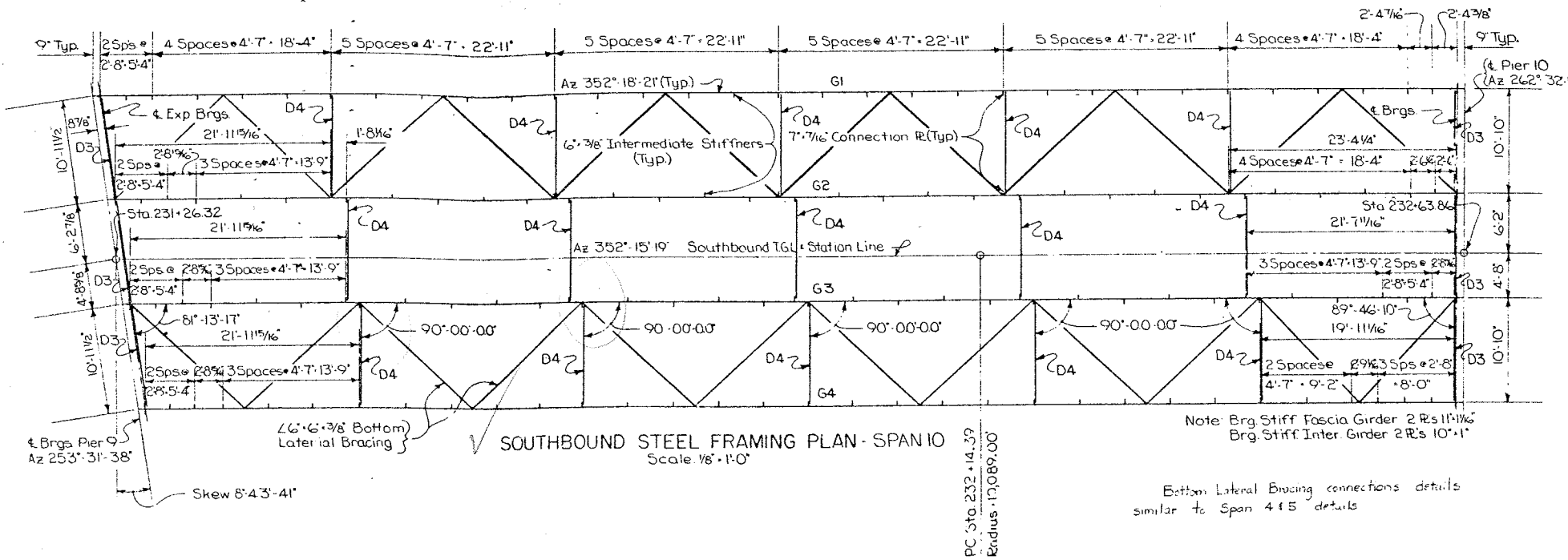

SOUTHBOUND STEEL FRAMING PLAN - SPAN 10
Scale 1/8" = 1'-0"

Note: Brg. Stiff Fascia Girder 2 Pl's 11" x 1 1/16"
Brg. Stiff Inter. Girder 2 Pl's 10" x 1"

Bottom Lateral Bracing connections details similar to Span 4 & 5 details

BOTTOM OF SLAB ELEVATIONS

SOUTHBOUND

GIRDER	SPAN	℄ EXP BRGS.	℄ SPAN	℄ FIX BRGS
G1	10	443.54	442.46	441.26
G2	10	443.72	442.49	441.15
G3	10	443.70	442.40	440.99
G4	10	443.45	442.16	440.77

NORTHBOUND

GIRDER	SPAN	℄ EXP. BRGS.	℄ SPAN	℄ FIX. BRGS.
G1	10	443.50	442.49	441.39
G2	10	443.56	442.42	441.19
G3	10	443.43	442.24	440.98
G4	10	443.17	442.00	440.75

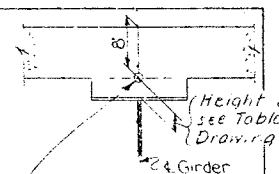

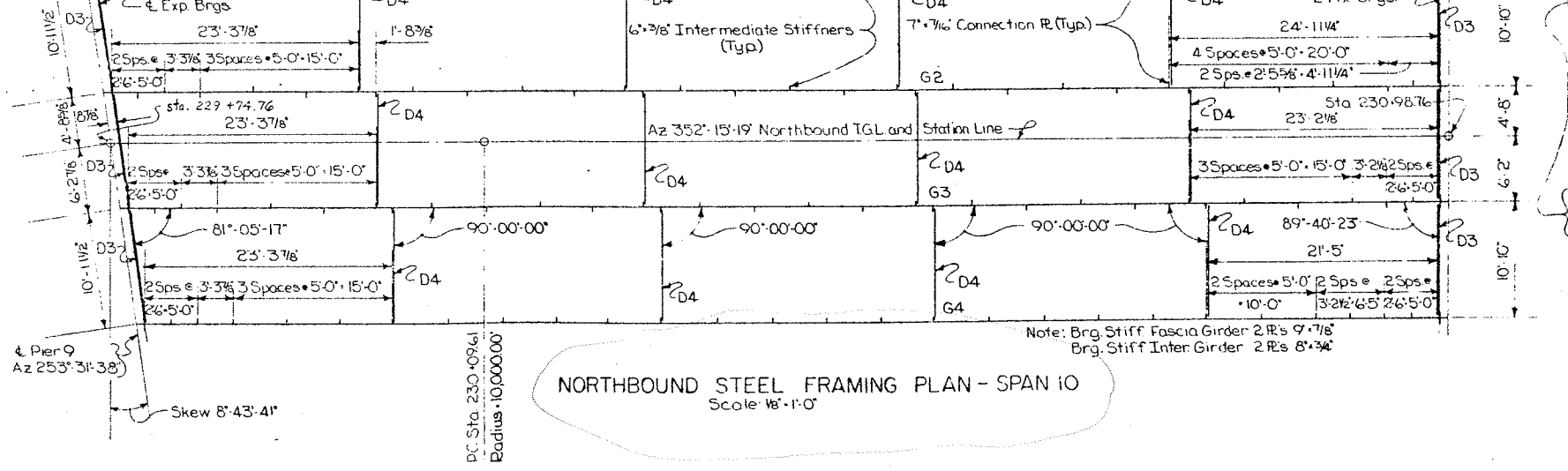

NORTHBOUND STEEL FRAMING PLAN - SPAN 10
Scale 1/8" = 1'-0"

Note: Brg. Stiff Fascia Girder 2 Pl's 9" x 7/16"
Brg. Stiff Inter. Girder 2 Pl's 8" x 3/4"

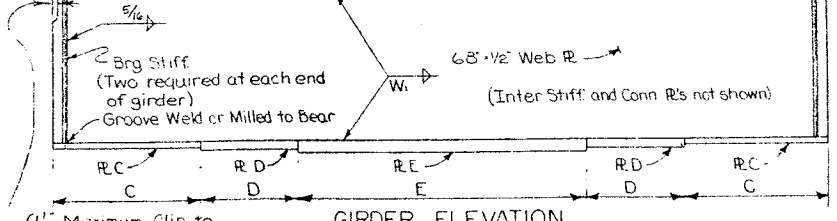

GIRDER ELEVATION
Not to Scale

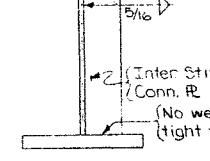

TYPICAL SECTION
Not to Scale

Notes: Flanges, webs, and gusset plates for bottom lateral bracing shall be A.S.T.M. Designation A441 Steel.
Diaphragms, stiffeners, bearings, and bottom lateral bracing (except gusset plates) shall be A.S.T.M. Designation A36 Steel.

WELD SIZE TABLE

Thickness of Flange	W1 Size of fillet weld joining web to flange
1 1/2" and under	5/16"
over 1 1/2" to 2 1/4"	3/8"
over 2 1/4"	1/2"

SPAN 10 GIRDER TABLE

	GIRDER	SPAN LENGTH ℄ TO ℄ BRGS.	FLANGE PLATE SIZES R A	R B	R C	R D	R E	FLANGE PLATE LENGTHS A	B	C	D	E	DEFLECTIONS (FT) STEEL	CONC.	S.D.L.	TOTAL	CAMBER V.C.C.(FT.)	CAMBER TOTAL (INCHES)		STUD SHEAR CONNECTOR SPACING
Northbound Southbound	G1	138'-8 15/16"	23" x 1"	23" x 1 1/2"	24" x 1"	24" x 2"	24" x 2 1/2"	36'-9 7/16"	66'-0"	20'-3 7/16"	19'-0"	61'-0"	0.10	0.15	0.11	0.36	.06	0.42'	5"	138 Spaces @ 12" = 138'-0"
	G2	137'-0 3/16"	19" x 7/8"	19" x 1 1/2"	24" x 1"	None	24" x 2"	32'-11 9/16"	72'-0"	23'-5 9/16"	0	91'-0"	0.11	0.28	0.04	0.43	.06	0.49	5 7/8"	137 Spaces @ 12" = 137'-0"
	G3	135'-3 5/8"	19" x 7/8"	19" x 1 1/2"	24" x 1"	None	24" x 2"	32'-0 9/16"	72'-0"	22'-6 9/16"	0	91'-0"	0.10	0.27	0.04	0.41	.05	0.46	5 1/2"	135 Spaces @ 12" = 135'-0"
	G4	133'-7"	23" x 1"	23" x 1 1/2"	24" x 1"	24" x 2"	24" x 2 1/2"	34'-2 1/8"	66'-0"	17'-8 1/2"	19'-0"	61'-0"	0.09	0.13	0.09	0.31	.05	0.36	4 3/8"	133 Spaces @ 12" = 133'-0"
	G1	125'-0 1/4"	17" x 3/4"	17" x 1 1/2"	24" x 1"	None	24" x 2"	28'-11 1/8"	68'-0"	21'-5 1/16"	0	83'-0"	0.07	0.12	0.09	0.28	.05	0.33	4"	125 Spaces @ 12" = 125'-0"
	G2	123'-3 1/8"	14" x 3/4"	14" x 1 1/2"	23" x 1"	None	23" x 1 1/2"	27'-6 7/16"	69'-0"	28'-0 9/16"	0	68'-0"	0.08	0.24	0.03	0.35	.05	0.40	4 3/4"	123 Spaces @ 12" = 123'-0"
	G3	121'-6"	14" x 3/4"	14" x 1 1/2"	23" x 1"	None	23" x 1 1/2"	26'-8"	69'-0"	27'-2"	0	68'-0"	0.07	0.23	0.03	0.33	.04	0.37	4 1/2"	121 Spaces @ 12" = 121'-0"
	G4	119'-8 7/8"	17" x 3/4"	17" x 1 1/2"	24" x 1"	None	24" x 2"	26'-3 7/16"	68'-0"	18'-9 7/16"	0	83'-0"	0.06	0.10	0.08	0.24	.04	0.28	3 3/8"	119 Spaces @ 12" = 119'-0"

G4 33.54 17.25
G1 28.51 21.01
G2 27.13 27.63
G3 26.25 26.75
G4 25.8698 18.3698

S.D.L. = superimposed dead load, includes weight of railing and parapet.
V.C.C. = vertical curve correction

PROJECT ENGINEER B. L. Parker
IN CHARGE OF F. Eckel
DESIGNED BY C. Rowe
DESIGN CHECKED BY Toepser & Smith
DETAILED BY J. F. Darcy
DETAIL CHECKED BY [illegible]

BRIDGE NO. 2
INTERSTATE ROUTE 481 OVER DEWITT YARDS

SPAN 10 NB & SB

DRAWING NO. 26 OF 50

F.I.S.H. 70-7

FED. RD. REG. NO.	STATE	FEDERAL AID PROJECT NO.	SHEET NO.	TOTAL SHEETS
1	NEW YORK	1-[illegible] 1-[illegible]	205	309

INTERSTATE ROUTE CONNECTION 570
BUTTERNUT INTERCHANGE (PHASE 2)
ONONDAGA COUNTY

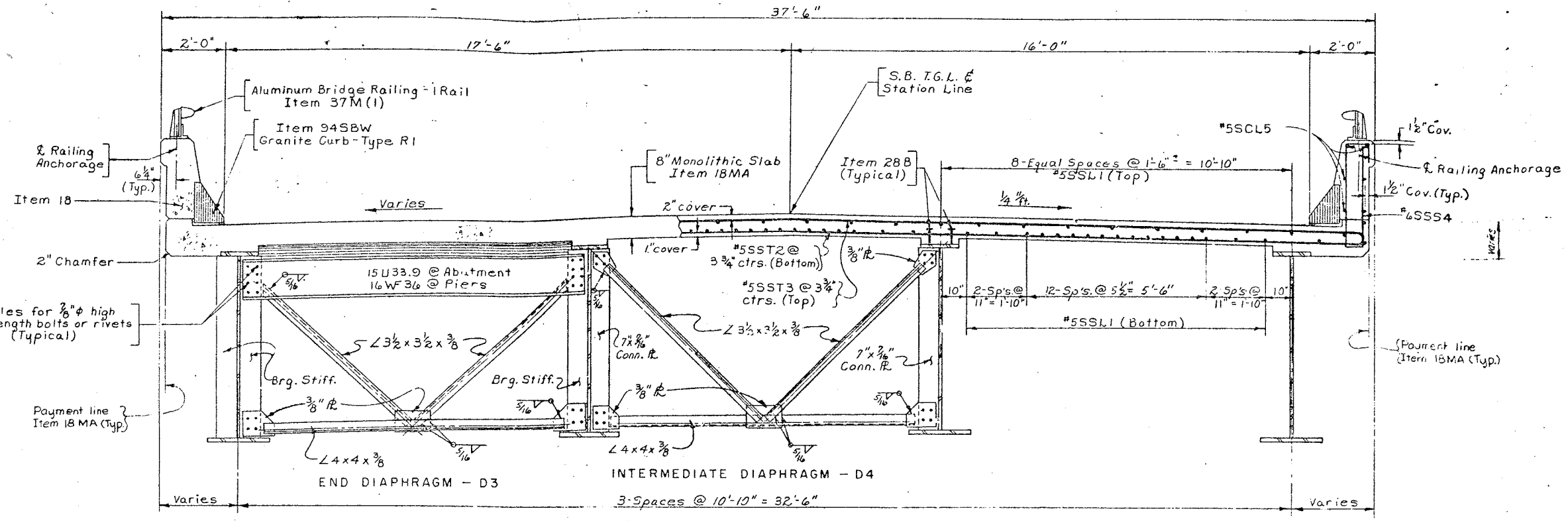

TRANSVERSE SECTION SOUTHBOUND SPANS 11,12,13,14 & 15
Scale: ½" = 1'-0"

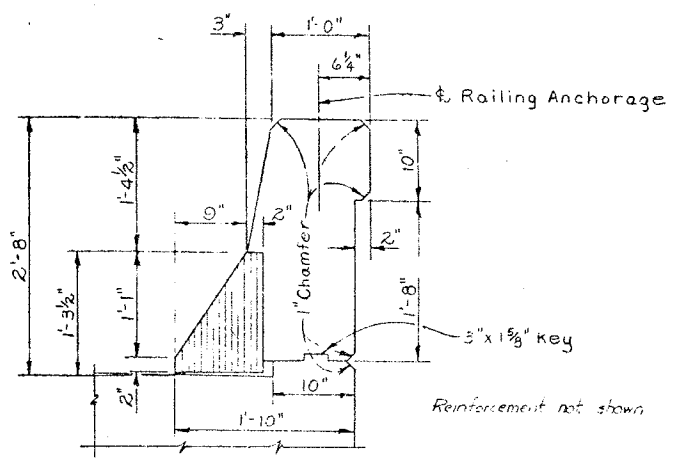

PARAPET DETAIL
Scale: 1" = 1'-0"

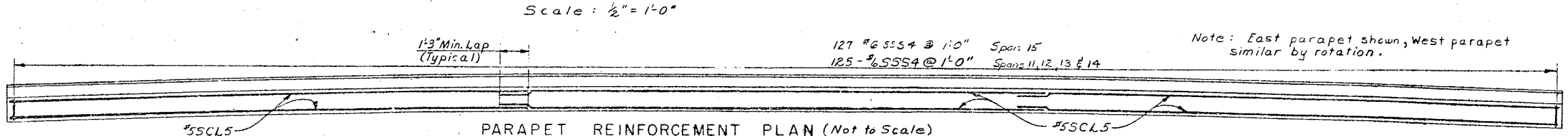

Note: East parapet shown, West parapet similar by rotation.

PARAPET REINFORCEMENT PLAN (Not to Scale)

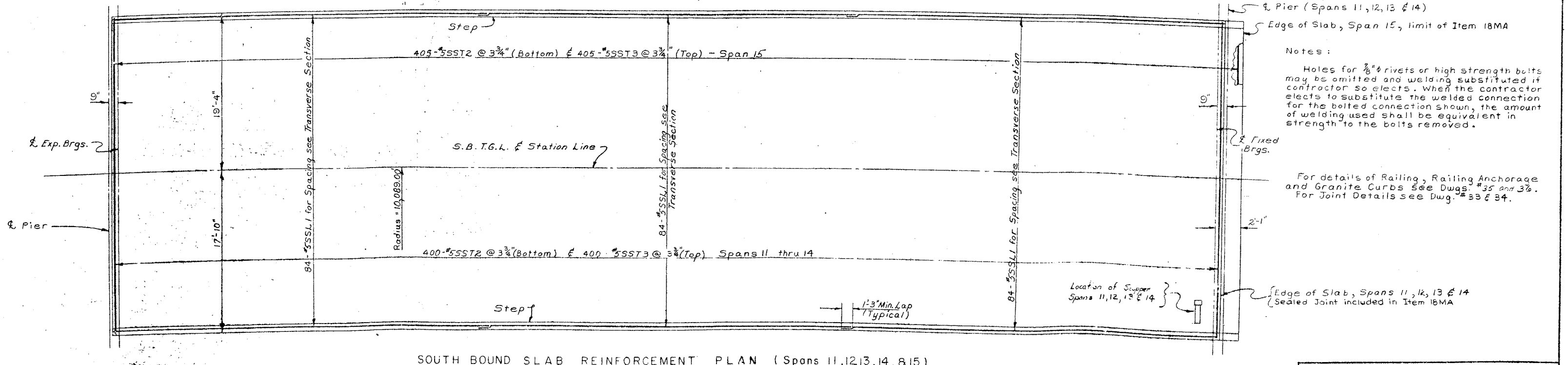

Notes:

Holes for ⅞"φ rivets or high strength bolts may be omitted and welding substituted if contractor so elects. When the contractor elects to substitute the welded connection for the bolted connection shown, the amount of welding used shall be equivalent in strength to the bolts removed.

For details of Railing, Railing Anchorage and Granite Curbs see Dwgs. #35 and 36. For Joint Details see Dwg. #33 & 34.

SOUTH BOUND SLAB REINFORCEMENT PLAN (Spans 11, 12, 13, 14, & 15)
Scale: 3/16" = 1'-0"

PROJECT ENGINEER R. Parker
IN CHARGE OF J. B. Sherman
DESIGNED BY D. H. Smith
DESIGN CHECKED BY S. Rowe
DETAILED BY J. C. Thompson
DETAIL CHECKED BY [illegible]

BRIDGE NO. 2
INTERSTATE ROUTE 481 OVER DEWITT YARDS

SPANS 11 THRU 15 SOUTHBOUND

DRAWING NO. 27 OF 5[illegible]

FED. RD. REG. NO.	STATE	FEDERAL AID PROJECT NO.	SHEET NO	TOTAL SHEETS
I	NEW YORK	I-690-3(28) I-481-2(118)	206	309

INTERSTATE ROUTE CONNECTION STS
DEWITT RECREATION (TYPE X)
ONONDAGA COUNTY

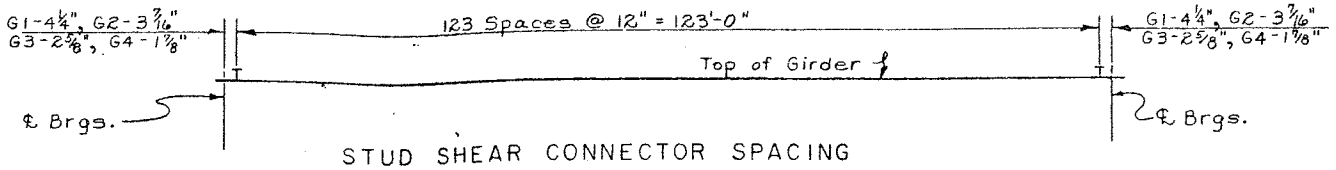

STUD SHEAR CONNECTOR SPACING
Not to Scale

TABLE OF STATIONS

SPAN	STATION "A"	℄	STATION "B"	℄	STATION "C"	℄
	STATION		STATION		STATION	
11 S.B.	232+63.86	℄ Pier #9 S.B.	233+88.86	℄ Pier #10 S.B.	—	—
12 S.B.	233+88.86	℄ Pier #10 S.B.	235+13.86	℄ Pier #11 S.B.	—	—
13 S.B.	235+13.86	℄ Pier #11 S.B.	236+38.86	℄ Pier #12 S.B.	—	—
14 S.B.	236+38.86	℄ Pier #12 S.B.	237+63.86	℄ Pier #13 S.B.	—	—
15 S.B.	237+63.86	℄ Pier #13 S.B.	—	—	238+88.11	℄ Fixed Brgs No. Abut. (S.B.)

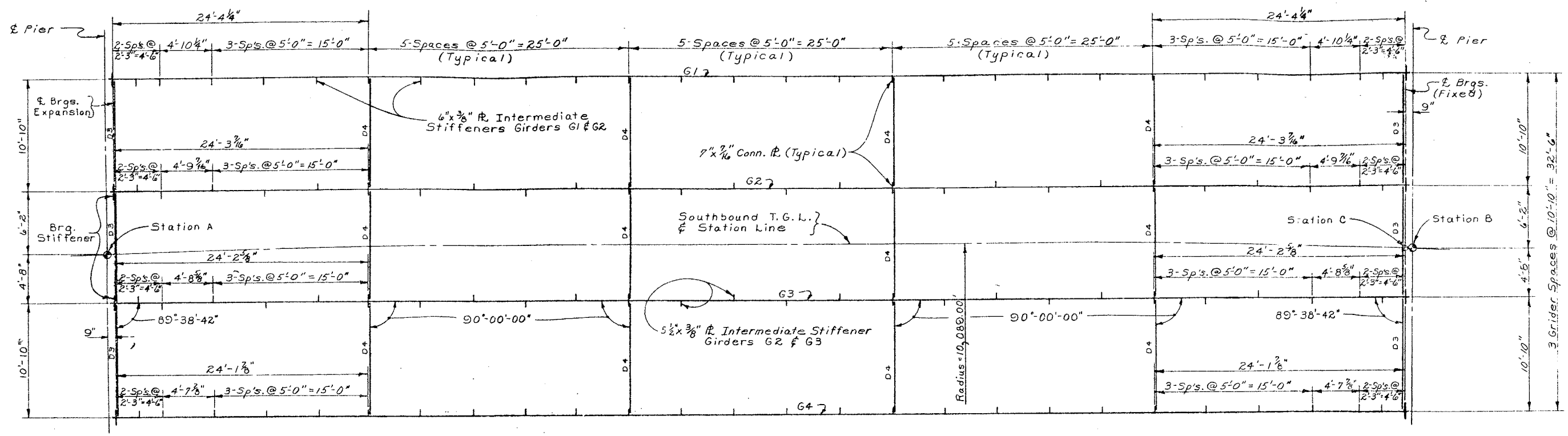

Note:
See Transverse Section for Diaphragms.

STEEL FRAMING PLAN (SPANS 11, 12, 13, 14 & 15 SOUTHBOUND)
Scale : 3/16" = 1'-0"

Notes:

Web and flanges shall be A.S.T.M. designation A441 Steel.

Stiffeners, connection plates, and diaphragms shall be A.S.T.M. designation A36 Steel.

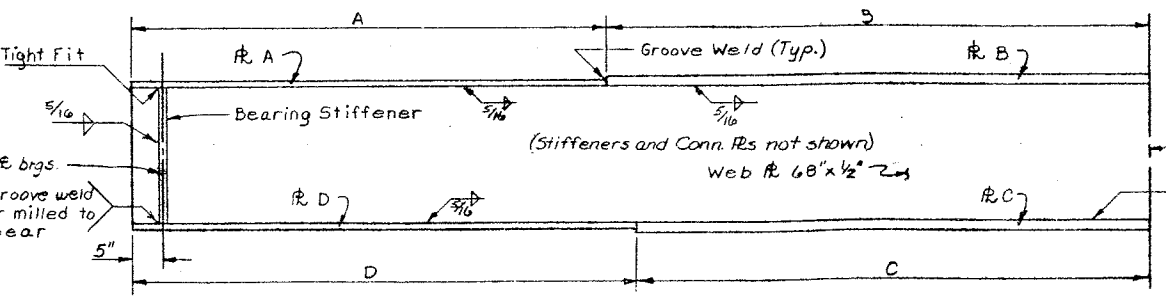

GIRDER ELEVATION
Not to Scale

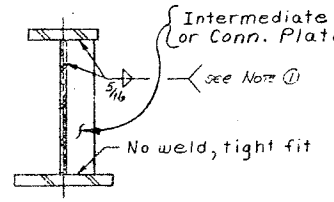

TYPICAL SECTION
Not to Scale

Note ①: Where connection plates are used in pairs, the fillet weld at top of stiffener is optional. See Note "Sup 4" in the Superstructure Notes.

SOUTHBOUND GIRDER TABLE — SPANS 11 thru 15

GIRDER	SPAN C. to C. BRGS.	FLANGE SIZES ℄ A	℄ B	℄ C	℄ D	FLANGE DIMENSIONS A	B	C	D	Brg. Stiffener 2-℄s. required each end of Girder	Intermediate Stiffener Size
G1	123'-8½"	16"x¾"	16"x1⅛"	23"x2"	23"x1"	28'-9¼"	33'-6"	40'-6"	21'-5¼"	9"x⅞"	6"x⅜"
G2	123'-6 15/16"	15"x¾"	13"x1½"	22"x1½"	22"x1"	28'-8 3/16"	33'-6"	33'-6"	28'-8 3/16"	8"x¾"	5½"x⅜"
G3	123'-5 5/16"	13"x¾"	13"x1½"	22"x1½"	22"x1"	28'-7⅝"	33'-6"	33'-6"	28'-7⅝"	8"x¾"	5½"x⅜"
G4	123'-3 11/16"	16"x¾"	16"x1½"	23"x2"	23"x1"	28'-6⅛"	33'-6"	40'-6"	21'-6⅞"	9"x⅞"	6"x⅜"

THEO. BOTTOM OF SLAB ELEV. (Southbound)

GIRDER	SPAN	℄ So. Brg.	℄ Span	℄ No. Brg.
G1	11	441.24	440.03	438.56
G2	11	441.12	439.30	438.33
G3	11	440.96	439.58	438.11
G4	11	440.74	439.35	437.88
G1	12	438.52	436.95	435.30
G2	12	438.29	436.73	435.07
G3	12	438.07	436.50	434.85
G4	12	437.84	436.27	434.62
G1	13	435.46	433.51	431.67
G2	13	435.03	433.28	431.45
G3	13	434.81	433.06	431.22
G4	13	434.58	432.83	431.00
G1	14	431.63	429.72	427.89
G2	14	431.40	429.49	427.66
G3	14	431.18	429.26	427.44
G4	14	430.95	429.04	427.21
G1	15	427.85	426.16	424.62
G2	15	427.62	425.93	424.39
G3	15	427.40	425.71	424.16
G4	15	427.17	425.48	423.94

TABLE OF AZIMUTHS

LOCATION	AZIMUTHS
℄ Pier #10 (S.B.)	262°-32'-11"
℄ Pier #11 (S.B.)	263°-14'-46"
℄ Pier #12 (S.B.)	263°-57'-22"
℄ Pier #13 (S.B.)	264°-39'-57"
℄ Pier #14 (S.B.)	265°-22'-33"
℄ Fixed Brgs. @ North Abut. (S.B.)	266°-05'-08"
℄ Girders, Span 11 (SB)	352°-53'-28"
℄ Girders, Span 12 (S.B.)	353°-36'-04"
℄ Girders, Span 13 (S.B.)	354°-18'-40"
℄ Girders, Span 14 (S.B.)	355°-01'-15"
℄ Girders, Span 15 (S.B.)	355°-43'-51"

SPAN	GIRDER	DEFLECTIONS (ft.) STEEL	SLAB	SDL	TOTAL	CAMBER VCC (ft.)	TOTAL (ft.)	TOTAL (in.)
Spans 11, 12 & 13 (S.B.)	G1 and G4	.07	.12	.08	.27	.04	.31	3¾
	G2 and G3	.08	.24	.03	.35	.04	.39	4⅝
Span 14 (S.B.)	G1 and G4	.07	.12	.08	.27	.05	.22	2⅝
	G2 and G3	.08	.24	.03	.35	-.05	.30	3⅝
Span 15 (S.B.)	G1 and G4	.07	.12	.08	.27	-.07	.20	2⅜
	G2 and G3	.08	.24	.03	.35	-.07	.28	3⅜

S.D.L. = Superimposed Dead Load (includes weight of parapet and railing.)

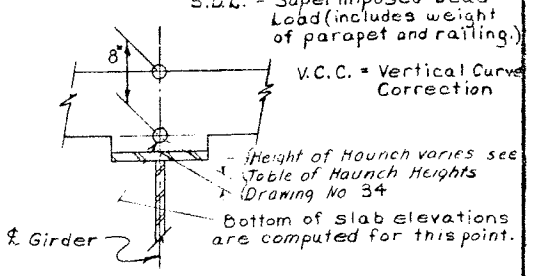

BRIDGE NO. 2
INTERSTATE ROUTE 481 OVER DEWITT YARDS

SPANS 11 THRU 15 SOUTHBOUND

DRAWING NO. 28 OF 50

PROJECT ENGINEER R. Parker
IN CHARGE OF J. B. Sherman
DESIGNED BY N. J. Toppses
DESIGN CHECKED BY S. Rowe
DETAILED BY J. C. Thompson
DETAIL CHECKED BY [illegible]

F.I.S.H. 70-7

FED. RD. REG. NO.	STATE	FEDERAL AID PROJECT NO.	SHEET NO.	TOTAL SHEETS
I	NEW YORK	I-690-3(28) I-481-2(1)22	207	309

INTERSTATE ROUTE CONNECTION 570
BUTTERNUT INTERCHANGE (PHASE 2)
ONONDAGA COUNTY

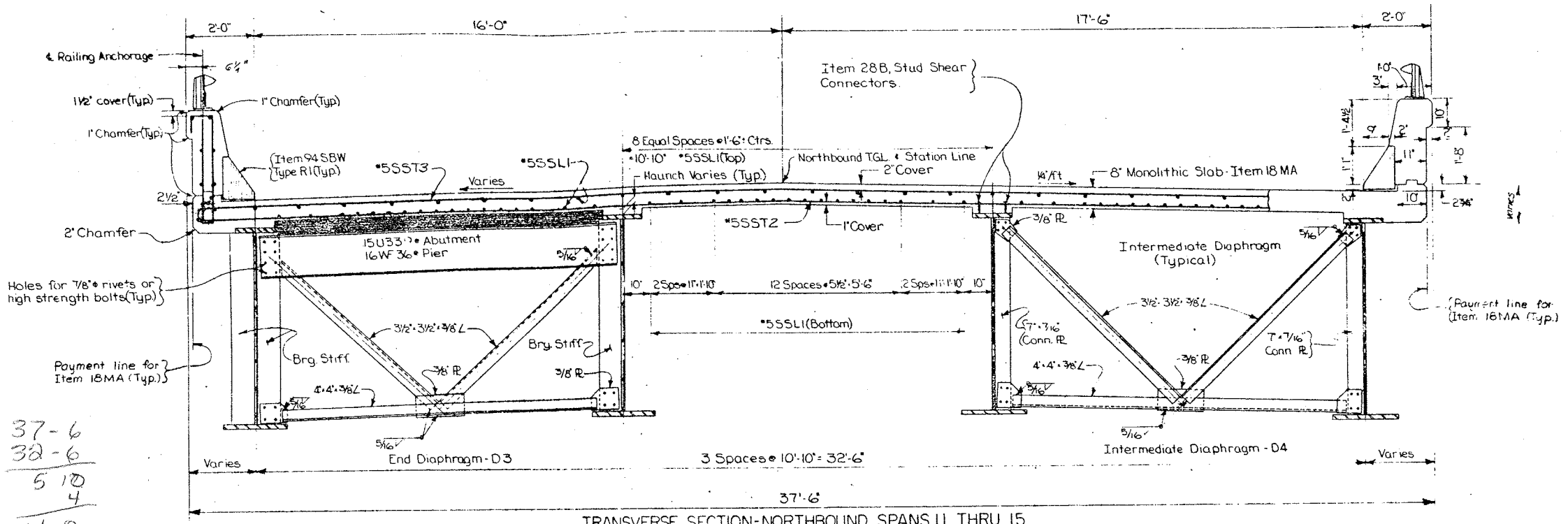

TRANSVERSE SECTION - NORTHBOUND SPANS 11 THRU 15
Scale ½" = 1'-0"

Notes:
Holes for 7/8" ø rivets or high strength bolts may be omitted and welding substituted if the contractor so elects. When the contractor elects to substitute the Welded Connection for the Bolted Connection shown, the amount of welding used shall be equivalent in strength to the bolts removed.

For details of Railing, Railing Anchorage, Granite Curbs and Joint Details, See Misc Detail Sheets.

37-6
32-6
5 10
4
4-8
2-4

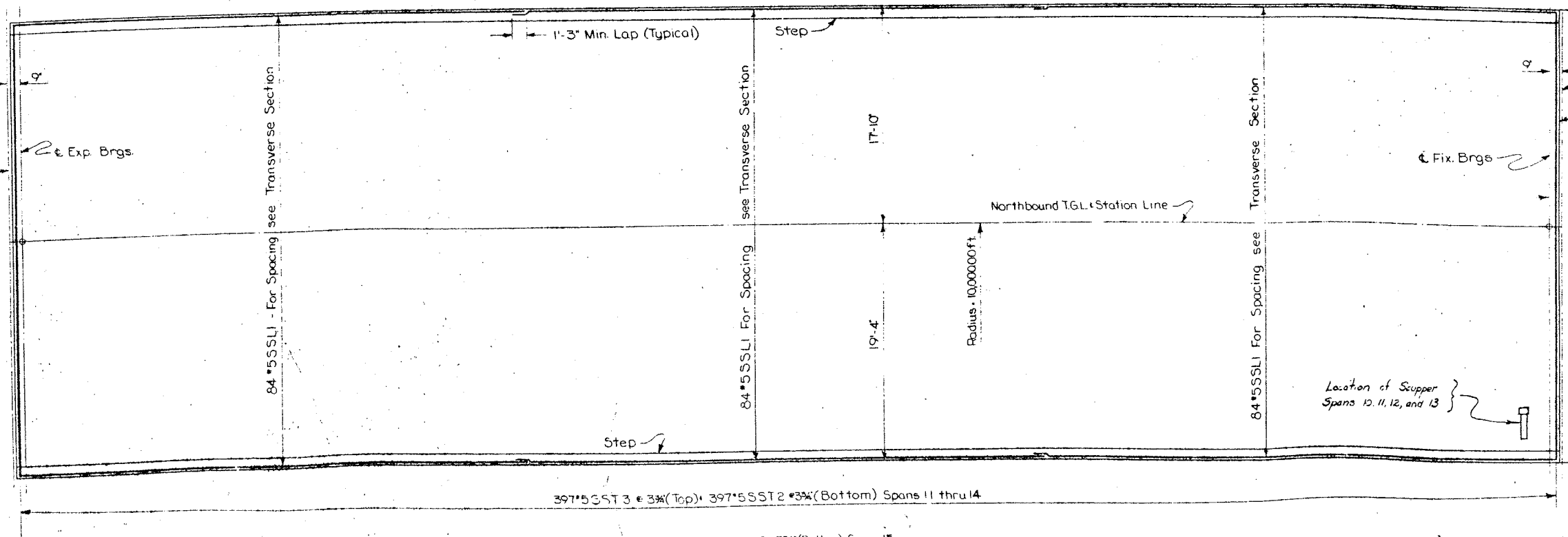

PARAPET REINFORCEMENT PLAN
Scale: 3/16" = 1'-0"

Note: West parapet shown
East parapet similar

SLAB REINFORCEMENT - SPANS 11 THRU 15 NORTHBOUND
Scale: 3/16" = 1'-0"

PROJECT ENGINEER R.L. Parker
IN CHARGE OF J.B. Sherman
DESIGNED BY N. Terpack
DESIGN CHECKED BY R. Smith
DETAILED BY J.F. Darcy
DETAIL CHECKED BY T.W. Fehl
CHECKED

BRIDGE NO. 2
INTERSTATE ROUTE 481 OVER DEWITT YARDS

SPANS 11 THRU 15 NORTHBOUND

DRAWING NO. 29 OF 50

F.I.S.H. 70-7

FED. RD. REG. NO.	STATE	FEDERAL AID PROJECT NO.	SHEET NO.	TOTAL SHEETS
I	NEW YORK	I-690-3(23) I-481-2(11)	208	308

INTERSTATE ROUTE CONNECTION 570
BUTTERNUT INTERCHANGE (PHASE 2)
ONONDAGA COUNTY

345-5584

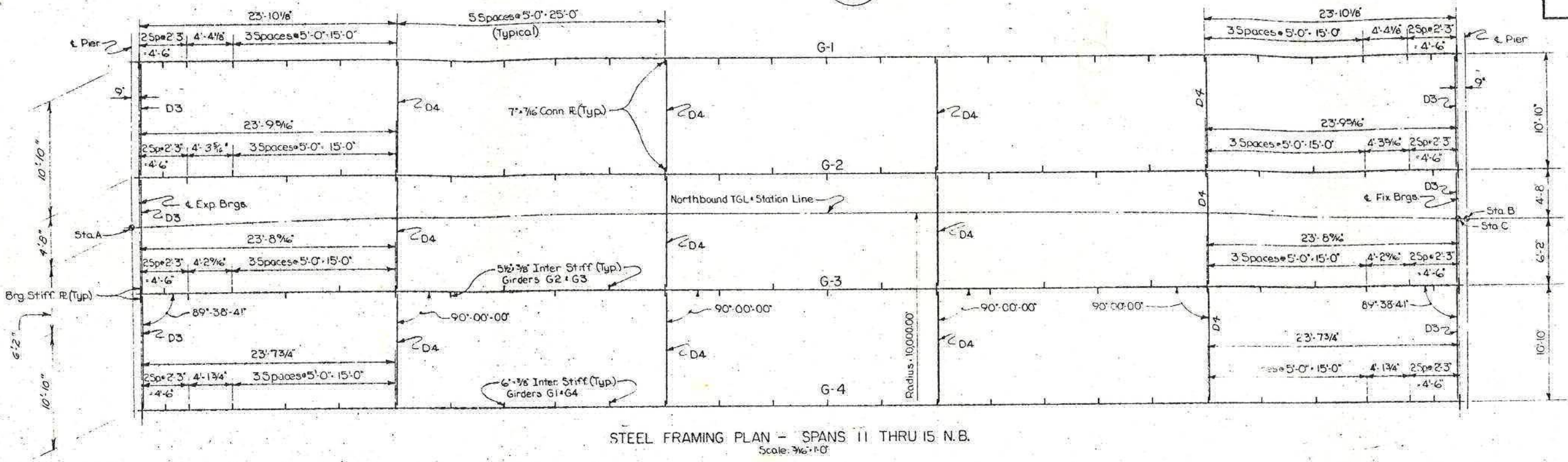

STEEL FRAMING PLAN – SPANS 11 THRU 15 N.B.
Scale: 3/16" = 1'-0"

TABLE OF AZIMUTHS	
LOCATION	AZIMUTH
℄ Pier #10 N.B.	262° 45' 57"
℄ Pier #11 N.B.	263° 28' 36"
℄ Pier #12 N.B.	264° 11' 13"
℄ Pier #13 N.B.	264° 53' 51"
℄ Pier #14 N.B.	265° 36' 28"
℄ Fixed Bearings @ North Abutment N.B.	266° 19' 06"
℄ girders, Span 11 N.B.	353° 07' 17"
℄ girders, Span 12 N.B.	353° 49' 55"
℄ girders, Span 13 N.B.	354° 32' 32"
℄ girders, Span 14 N.B.	355° 15' 10"
℄ girders, Span 15 N.B.	355° 57' 47"

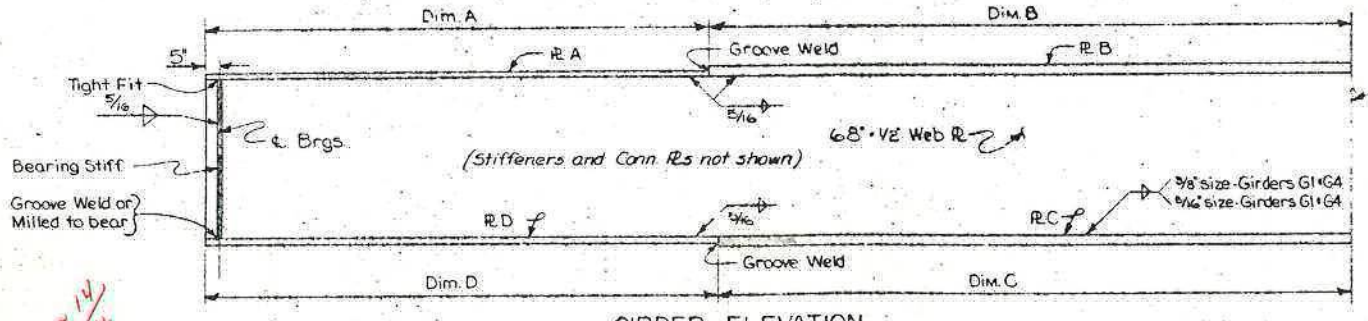

GIRDER ELEVATION
Not to Scale

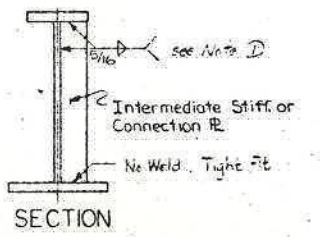

SECTION

Web and flanges shall be A.S.T.M. Designation A441 Steel. Stiffeners, connection plates and diaphragms shall be A.S.T.M. Designation A36 Steel.

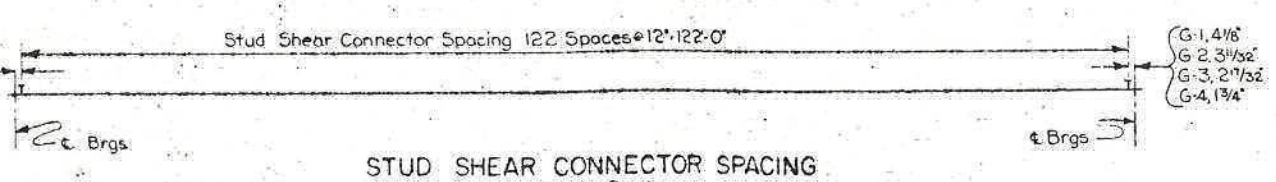

STUD SHEAR CONNECTOR SPACING
Not to Scale

Note ①: Where connection plates are used in pairs, the fillet weld at top of stiffener is optional. See Note "Sup 4." in the Superstructure Notes.

BOTTOM OF SLAB ELEVATIONS NORTHBOUND				
GIRDER	SPAN	℄ EXP BRGS	℄ SPAN	℄ FIX BRGS
G-1	11	441.36	440.02	438.57
G-2	11	441.16	439.80	438.34
G-3	11	440.94	439.57	438.12
G-4	11	440.72	439.34	437.89
G-1	12	438.53	436.98	435.34
G-2	12	438.30	436.75	435.12
G-3	12	438.08	436.52	434.89
G-4	12	437.85	436.30	434.66
G-1	13	435.30	433.57	431.75
G-2	13	435.07	433.34	431.53
G-3	13	434.85	433.12	431.30
G-4	13	434.62	432.89	431.08
G-1	14	431.71	429.80	427.98
G-2	14	431.48	429.57	427.75
G-3	14	431.26	429.34	427.53
G-4	14	431.03	429.12	427.30
G-1	15	427.93	426.25	424.71
G-2	15	427.71	426.02	424.48
G-3	15	427.48	425.80	424.26
G-4	15	427.26	425.57	424.03

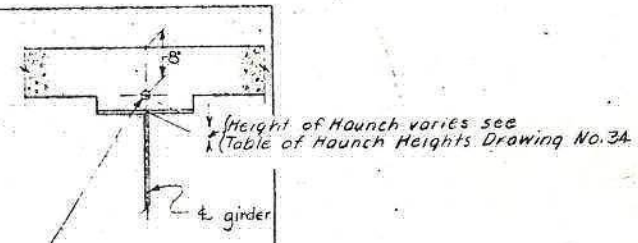

NORTHBOUND GIRDER TABLE – SPANS 10 THRU 14											
	SPAN LENGTH	FLANGE SIZE				FLANGE DIMENSIONS				BEARING STIFF. 2 PLs Required at each end of girder	INTERMEDIATE STIFFNER SIZE
RDER	℄ TO ℄ BEARINGS	PL A	PL B	PL C	PL D	Z0 A	B	C	D		
1	122'-8 5/16"	16" x ¾"	16" x 1 1/8"	23" x 2"	23" x 1"	23'-3⅛"	33'-6"	40'-6"	21'-3⅛"	9" x ⅞"	6" x ⅜"
2	122'-6 11/16"	13" x ¾"	13" x 1½"	22" x 1½"	22" x 1"	23'-2⅝"	33'-6"	33'-6"	23'-2⅝"	8" x ¾"	5½" x ⅜"
3	122'-5 1/16"	13" x ¾"	13" x 1½"	22" x 1½"	22" x 1"	23'-1⅛"	33'-6"	33'-6"	23'-1⅛"	8" x ¾"	5½" x ⅜"
4	122'-3 7/16"	16" x ¾"	16" x 1½"	23" x 2"	23" x 1"	23'-0¾"	33'-6"	40'-6"	21'-0¾"	9" x ⅞"	6" x ⅜"

DEFLECTIONS (FT.)						CAMBER		
SPAN	GIRDER	STEEL	SLAB	S.D.L.	TOTAL	V.C.C. (FT.)	TOTAL FT.	TOTAL IN.
Spans 11, 12 & 13 Northbound	G1 & G4	.07	.12	.08	.27	.04	3.1	37⅛
	G2 & G3	.08	.24	.03	.35	.04	3.9	47⅛
Span 14 Northbound	G1 & G4	.07	.12	.08	.27	-.04	2.3	27⅝
	G2 & G3	.08	.24	.03	.35	-.04	3.1	37⅛
Span 15 Northbound	G1 & G4	.07	.12	.08	.27	-.07	2.0	23⅞
	G2 & G3	.08	.24	.03	.35	-.07	2.8	33⅝

V.C.C. - Vertical Curve Camber
S.D.L. (Superimposed Dead Load): Includes weight of parapet & railing.

TABLE OF STATIONS						
SPAN	STATION A		STATION B		STATION C	
	STATION	℄	STATION	℄	STATION	℄
11 (NB)	230+98.76	℄ Pier #10 (NB)	232+22.76	℄ Pier #11 (NB)		
12 (NB)	232+22.76	℄ Pier #11 (NB)	233+46.76	℄ Pier #12 (NB)		
13 (NB)	233+46.76	℄ Pier #12 (NB)	234+70.76	℄ Pier #13 (NB)		
14 (NB)	234+70.76	℄ Pier #13 (NB)	235+94.76	℄ Pier #14 (NB)		
15 (NB)	235+94.76	℄ Pier #14 (NB)			237+18.01	℄ Fix Brgs N.A. (NB)

PROJECT ENGINEER R. L. Parker
IN CHARGE OF J. B. Sherman
DESIGNED BY J. Tapper
DESIGN CHECKED BY R. Smith
DETAILED BY J. F. Darcy
DETAIL CHECKED BY J. W. Eckel

BRIDGE NO. 2
INTERSTATE ROUTE 481 OVER DEWITT YARDS

SPANS 11 THRU 15 NORTHBOUND

DRAWING NO. 30 OF 50

F.I.S.H. 76-7

FED. NO. REG. NO.	STATE	FEDERAL AID PROJECT NO.	SHEET NO.	TOTAL SHEETS
I	NEW YORK	I-481-2(16)	209	309

INTERSTATE ROUTE CONNECTION 570
CUTTERMILL AVENUE AREA (PHASE 2)
ONONDAGA COUNTY

Note: Concrete Slab not shown.

PLAN (AT PIER # 3, 4 or 5)
Scale: 1"=1'-0"

Direction of North for Southbound Finger Plate Plan

Direction of North for Northbound Finger Plate Plan

SECTION B-B
Scale: 1"=1'-0"

	Dimension at 68° F	T
"A"	4 11/16"	5/32"
"B"	1 7/8"	5/32"

T is the decrease in the dimension for every 10° F rise in temperature (and the increase in the dimension for every 10°F fall in temperature)

* Note: These are plan dimensions and do not take into account the additional length needed due to the cross slope and profile of the roadway.

FINGER PLATE PLAN
Scale: 1"=1'-0"

SECTION X-X
No Scale

SECTION Y-Y
No Scale

FINGER DETAIL
Scale: 3"=1'-0"

SECTION A-A
Not to scale

DETAIL "A"
Scale: 3"=1'-0"

CONNECTION TO TROUGH
Full Scale

NOTES:
Finger R's shall follow slope and grade of roadway. All steel shall be Item 23 unless otherwise indicated.
The 1/2" finger plates, the 1/4" vertical side plates, and 1/4" bent deflector plates shall be corrosion resistant steel A.S.T.M. Designation A242.

PROJECT ENGINEER	R. Parker
IN CHARGE OF	V. Sherman
DESIGNED BY	N.A. Toppses
DESIGN CHECKED BY	F. Eckel
DETAILED BY	N.A. Toppses
DETAIL CHECKED BY	F. Eckel

BRIDGE NO. 2
INTERSTATE ROUTE 481 OVER DEWITT YARDS

FINGER JOINT AT PIERS 3,4+5

DRAWING NO. 31 OF 50

F.I.S.H. 70-7

FED. RD. REG. NO.	STATE	FEDERAL AID PROJECT NO.	SHEET NO.	TOTAL SHEETS
I	NEW YORK	I-690-3(23) I-481-2(116)	210	309

INTERSTATE ROUTE CONNECTION 570
BUTTERNUT INTERCHANGE (PHASE 2)
ONONDAGA COUNTY

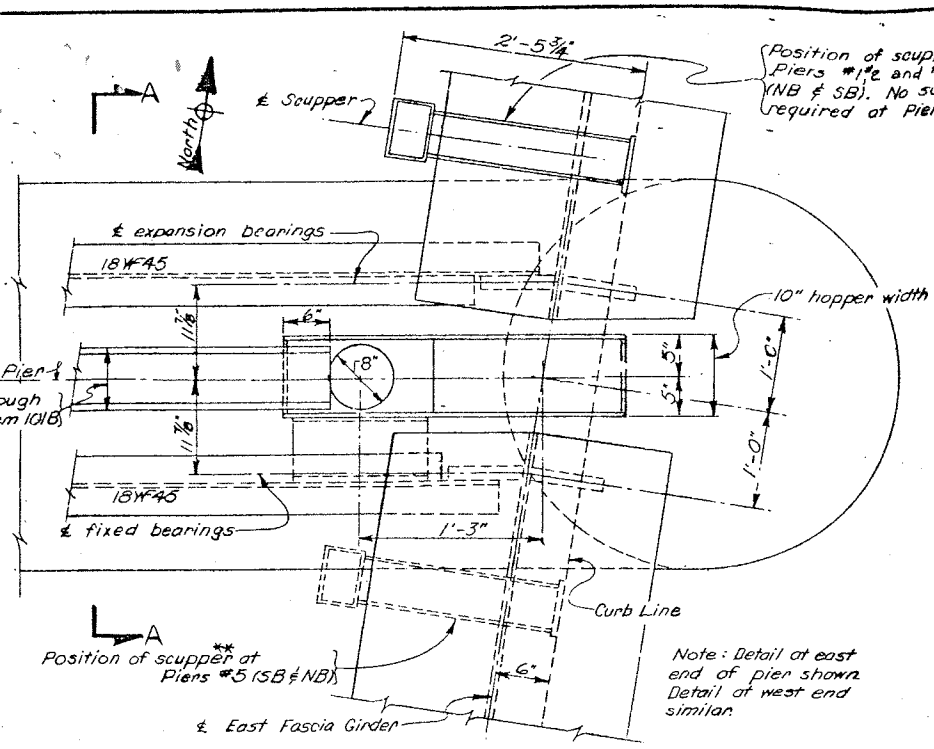

PLAN AT EAST END, PIERS 1,2,3,4 &5(NB & SB)
Scale : 1" = 1'-0"

Note : Detail at east end of pier shown. Detail at west end similar.

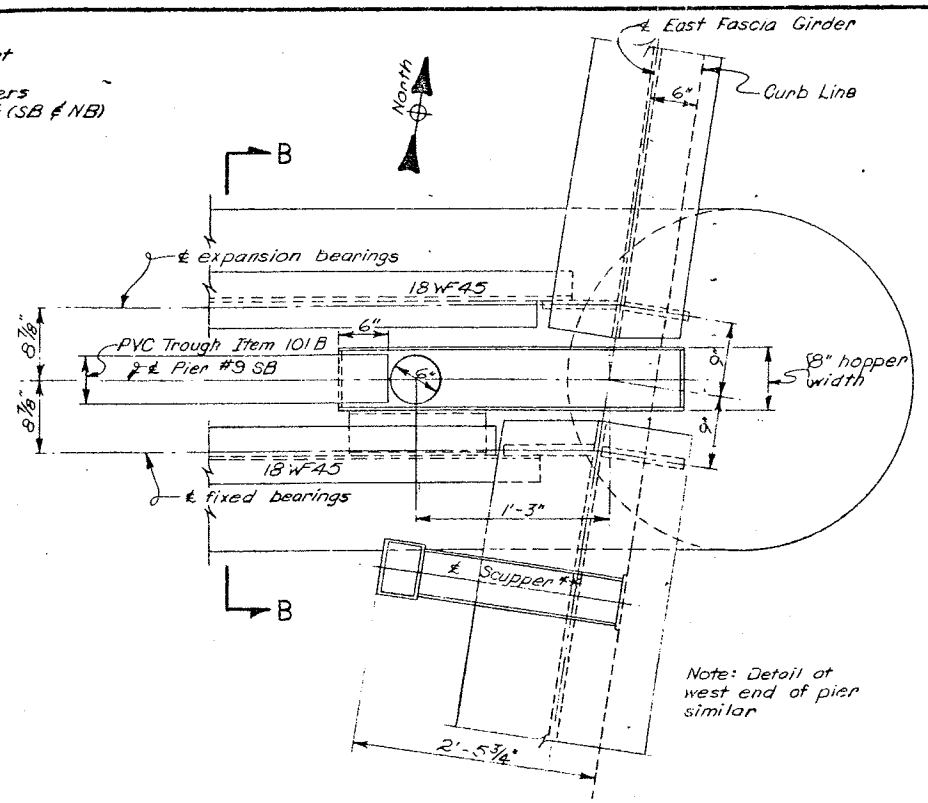

Note: Detail at west end of pier similar

PLAN AT EAST END OF PIER "9 SOUTHBOUND
Scale : 1" = 1'-0"

** Adjust exact location of scuppers which drain into downspouts systems so as to accommodate the location of the downspouts.
Adjust exact location of scuppers which drain directly onto the ground so as not to spill on piers or onto diaphragms

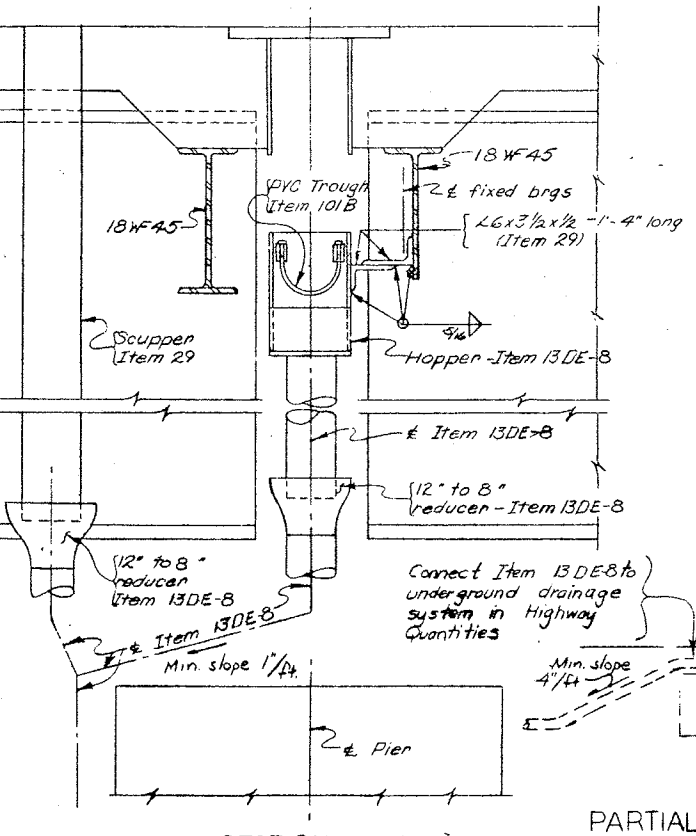

SECTION A-A
Scale : 1" = 1'-0"

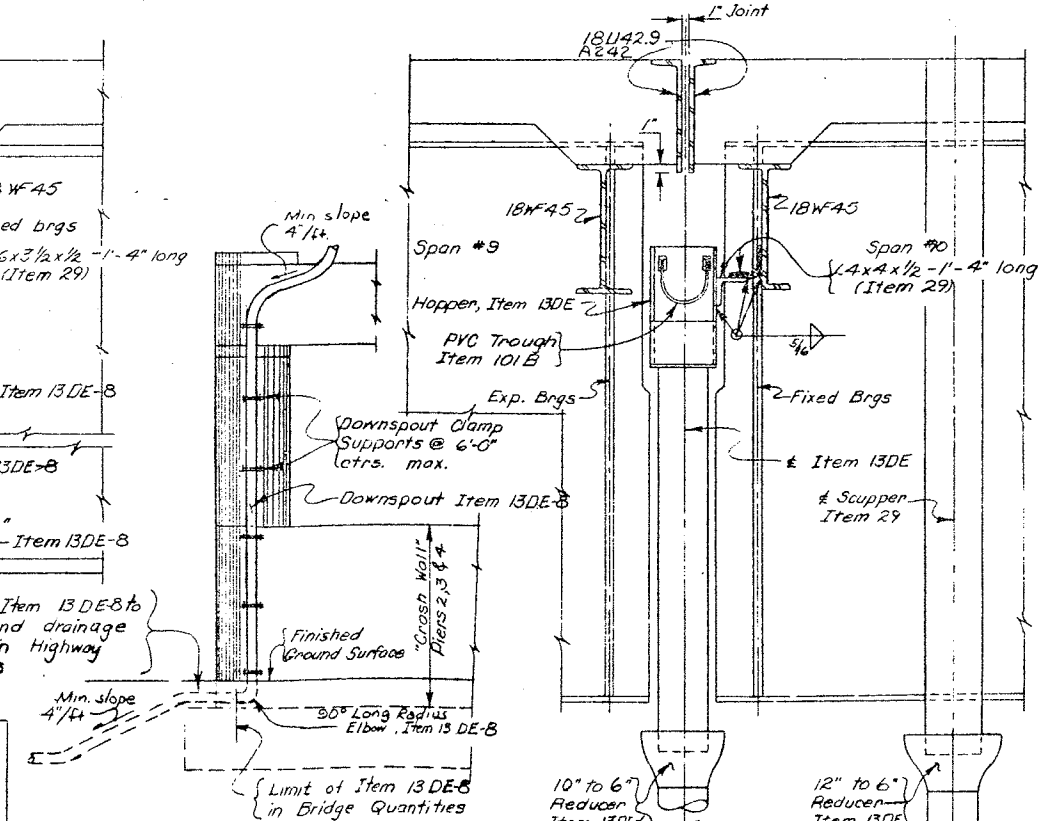

PARTIAL ELEVATION AT PIERS 1,2,3,4,5*,6 &7 (NB&SB)
Scale : 3/16" = 1'-0"

*No Hopper at Piers #6 ℄ #7 Downspout drains only the scupper.

SECTION B-B
Scale : 1" = 1'-0"

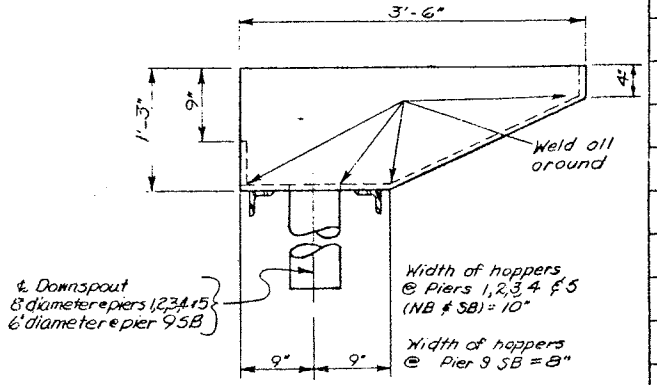

HOPPER ELEVATION
Scale : 1" = 1'-0"

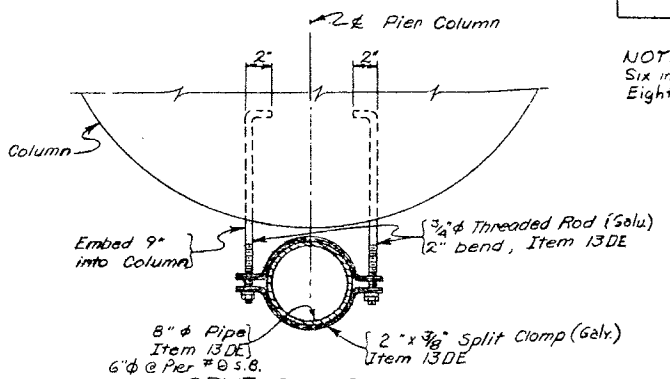

SPLIT CLAMP DETAIL
Scale : 1½" = 1'-0"

Hoppers and downspouts (including all necessary pipe supports, hangers, and fittings) shall be paid for under Item 13DE-6 & Item 13DE-8.

Hopper shall be fabricated from steel plates, 3/8 inch thick, A.S.T.M. Designation A36 Steel. Hopper shall be galvanized after fabrication is complete in accordance with M19.

All bends in downspouts will be long radius bends. All indicated slopes on horizontal pipe runs will be the minimum allowed, and the long radius bends will be fabricated to take this slope into account. All costs involved will be included in the price bid for Item 13DE-6 & Item 13DE-8

PIER NO.	JOINTS: EXP. JT. SEALED WITH PREFORMED JOINT SEALER	JOINTS: OPEN JOINT WITH HOPPER AND TROUGH	JOINTS: FINGER JOINT WITH HOPPER AND TROUGH	SCUPPER **	DOWNSPOUT
1		✓		(East ℄ West curb lines) North side of Pier	✓ (8" dia)
2		✓		(East ℄ West curb lines) North side of Pier	✓ (8" dia)
3			✓	(East ℄ West curb lines) North side of Pier	✓ (8" dia)
4			✓	None	✓ (8" dia.)
5			✓	(East ℄ West curb lines) South side of Pier	✓ (8" dia)
6	✓			(East ℄ West curb lines) South side of Pier	✓ (8" dia)
7	✓			(East ℄ West curb lines) South side of Pier	✓ (8" dia.)
8	✓			(East ℄ West curb lines) South side of Pier	
9	NB only	SB only		(East ℄ West curb lines) South side of Pier	SB only (8" dia)
10	✓			(East curb line only) South side of Pier	
11	✓			(East curb lines only) South side of pier	
12	✓			(East curb lines only) South side of pier	
13	✓			(East curb lines only) South side of pier	
14	✓			(East curb lines only) South side of pier	

NOTES:
Six inch diameter downspouts shall be paid for under Item 13 DE-6
Eight inch diameter downspouts shall be paid for under Item 13 DE-8

BRIDGE NO. 2
INTERSTATE ROUTE 481 OVER DEWITT YARDS

DOWNSPOUT DETAILS

DRAWING NO. 32 OF 50

PROJECT ENGINEER R Parker
IN CHARGE OF F.W. Eckel
DESIGNED BY
DESIGN CHECKED BY
DETAILED BY J. Dunnant
DETAIL CHECKED BY F.W. Eckel

F.I.S.H. 70-7

FED. RD. REG. NO.	STATE	FEDERAL AID PROJECT NO.	SHEET NO.	TOTAL SHEETS
1	NEW YORK	I-390-3(103) I-481-2(116)	2/3	3/3

INTERSTATE ROUTE 481 CONNECTION 370
BUTTERNUT INTERCHANGE (PHASE 2)
ONONDAGA COUNTY

Rail to be welded with full penetration groove welds and ground flush in the shop using the inert gas metal arc welding process (MIG). Wire shall be 5356 Filler Alloy. Welding of this joint will be permitted regardless of Note ① on Railing Detail Sheet.

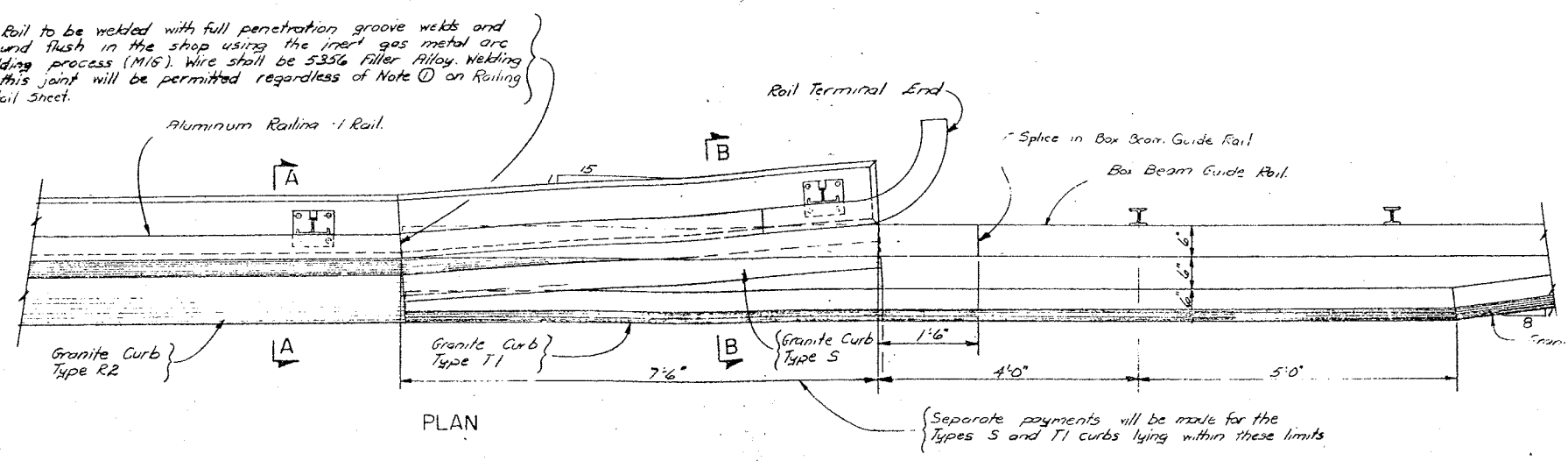

PLAN

{Separate payments will be made for the Types S and T1 curbs lying within these limits

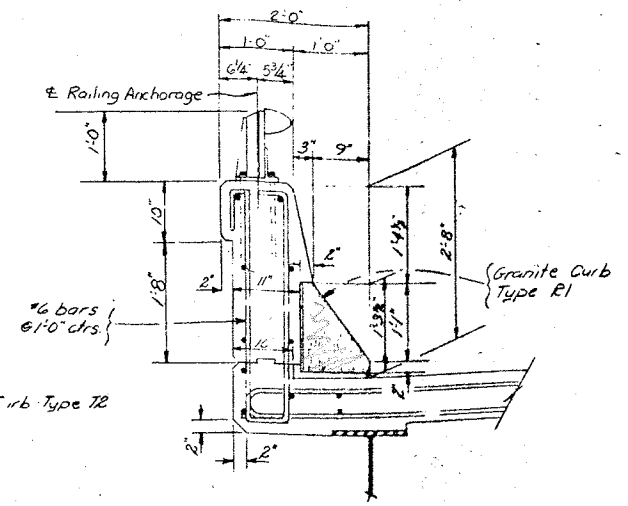

SECTION THRU SUPERSTRUCTURE

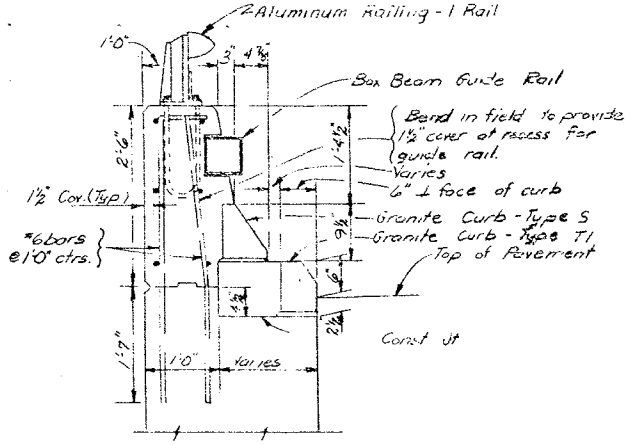

SECTION B-B

All chamfers shown on this sheet are 1" unless otherwise indicated.

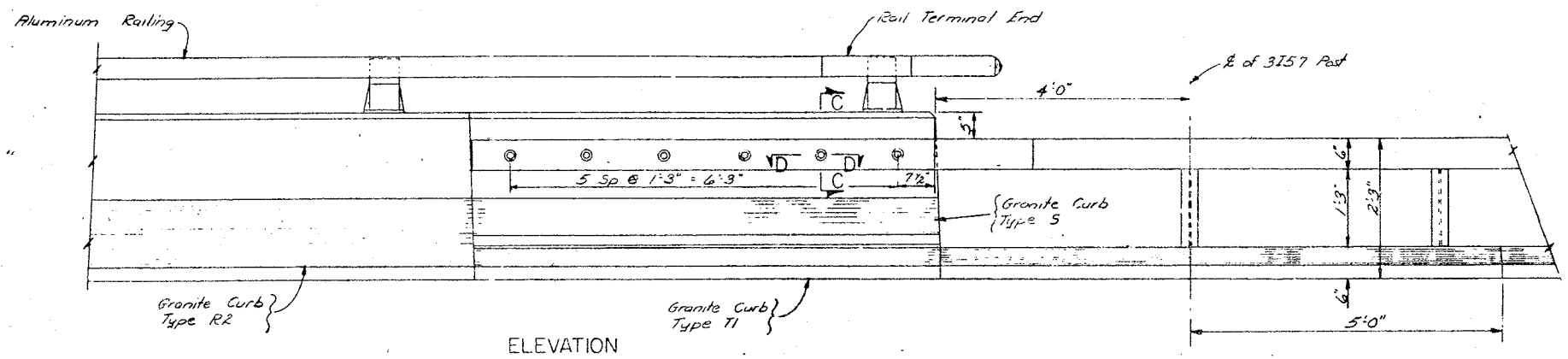

ELEVATION

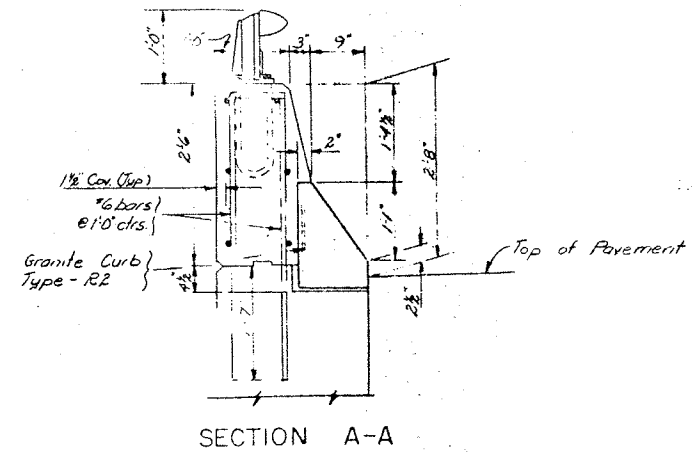

SECTION A-A

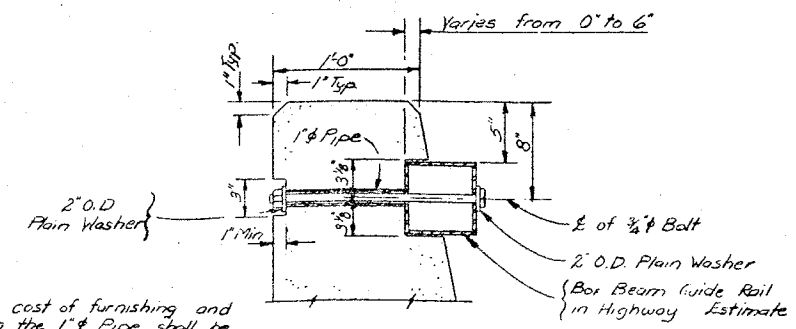

The cost of furnishing and placing the 1" ϕ Pipe shall be included in the unit price bid for the concrete in the parapet.

The cost of furnishing and placing the ⅞" ϕ Bolts with their nuts and washers shall be included in the Box Beam Guide Rail Item.

SECTION C-C

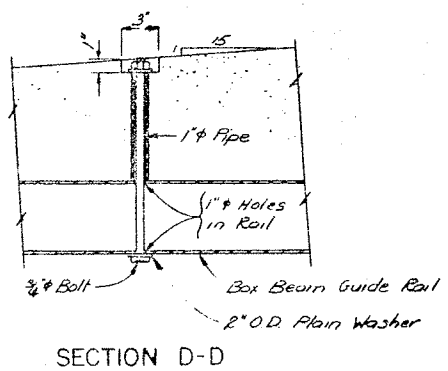

SECTION D-D

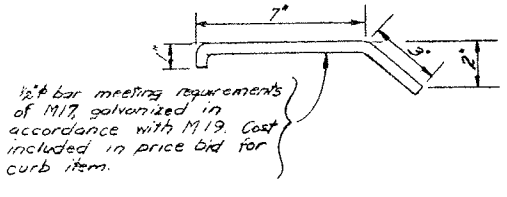

½" ϕ bar meeting requirements of M17, galvanized in accordance with M19. Cost included in price bid for curb item.

ANCHOR BAR

Note A:
Rake out joint to a depth of ¾" and tuck point flush with epoxy mortar.

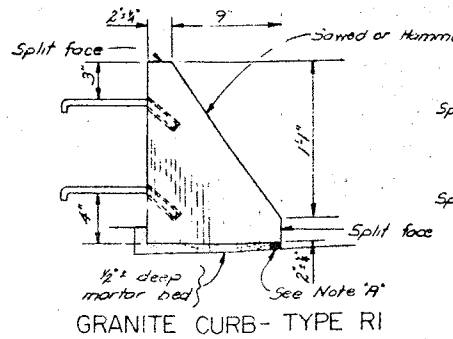

GRANITE CURB - TYPE R1

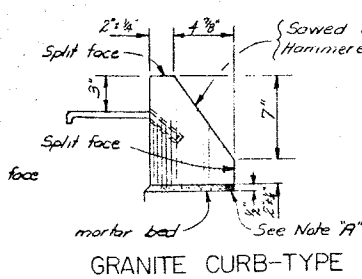

GRANITE CURB - TYPE S

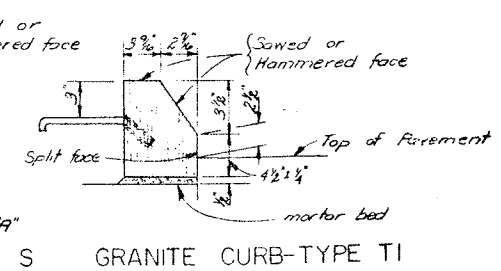

GRANITE CURB - TYPE T1

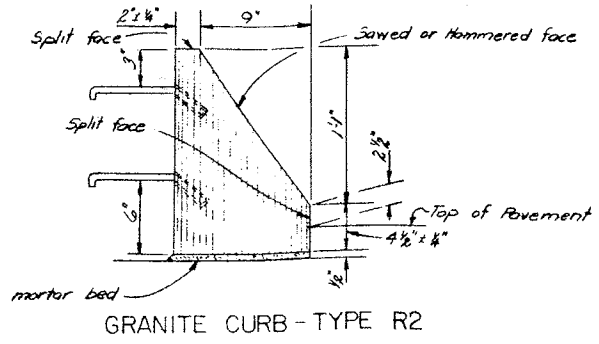

GRANITE CURB - TYPE R2

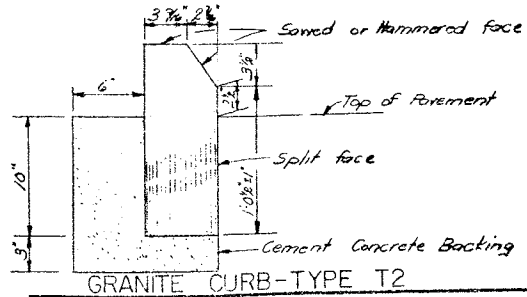

GRANITE CURB - TYPE T2

BRIDGE NO. 2
INTERSTATE ROUTE 481 OVER DEWITT YARDS

CONCRETE PARAPET

DRAWING No. 35 OF 50

DETAILED BY Vince Krzeskowiak
DETAIL CHECKED BY D. Granoff 1/1/68
REV.: D. Smith 1/ Jun. Engr.

FED. RD. REG. NO.	STATE	FEDERAL AID PROJECT NO.	SHEET NO	TOTAL SHEETS
1	NEW YORK	I-690-3(126) I-481-2(116)	214	309

INTERSTATE ROUTE CONNECTION 570
BUTTERNUT INTERCHANGE (PHASE 2)
ONONDAGA COUNTY

NOTE: See Railing Layout Sheet for post spacing

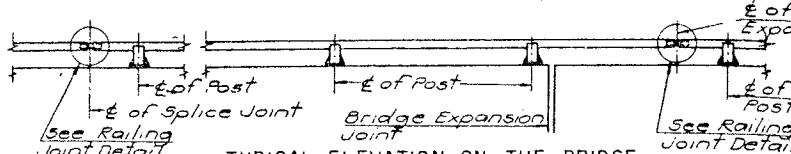

TYPICAL ELEVATION ON THE BRIDGE
Scale: 1/4" = 1'-0"

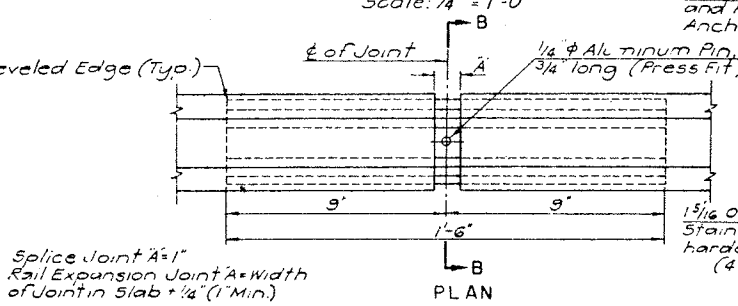

PLAN
RAILING JOINT
Scale: 3"=1'-0"

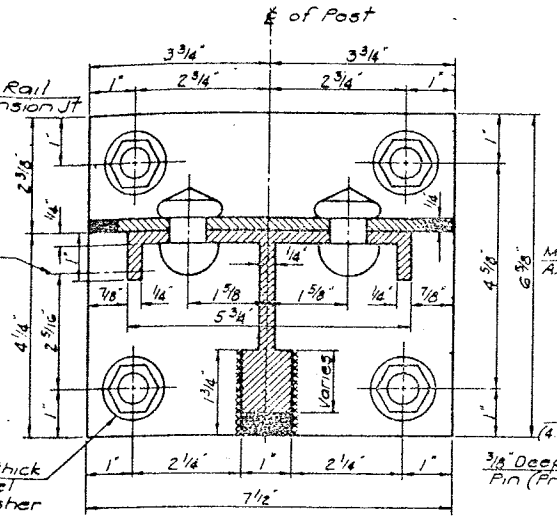

SECTION A-A
Scale: 1/2"=1"

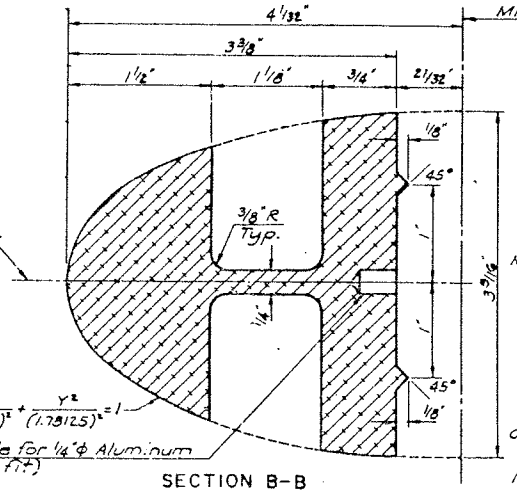

SECTION B-B
TRAFFIC RAIL SPLICE EXTRUSION
Scale: 1"=1"

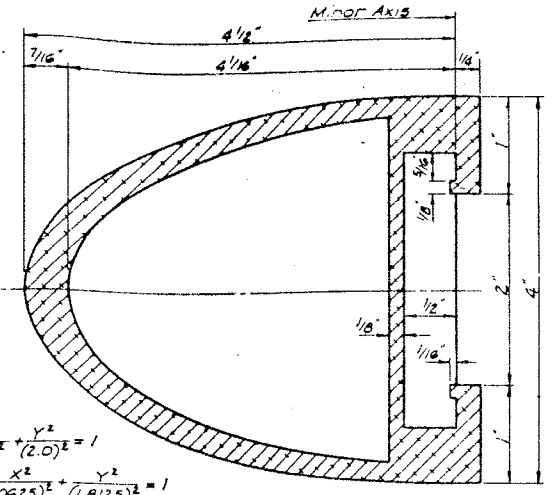

TRAFFIC RAIL EXTRUSION
Scale: 1"=1"

NOTE: Grind all corners on top of post to 1/16 Radius

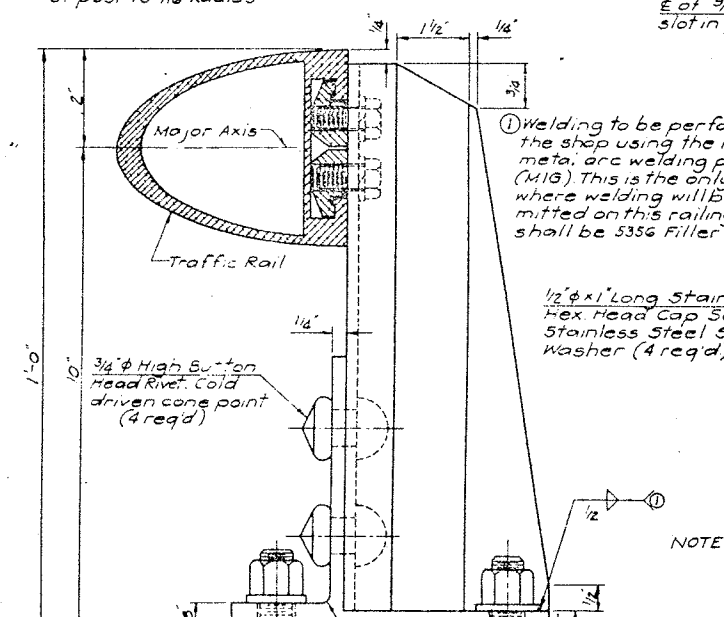

PARTIAL SECTION

① Welding to be performed in the shop using the inert gas metal arc welding process (MIG). This is the only joint where welding will be permitted on this railing. Wire shall be 5356 Filler Alloy.

1/2" ϕ x 1" Long Stainless Steel Hex. Head Cap Screw and Stainless Steel Spring Lock Washer (4 req'd)

NOTE: Nuts on top of Base Plate not shown.

5/8" ϕ U shaped Stainless Steel Anchor Bolt. Thread top 4". Anchor Bolts shall be set by template - (2 req'd)

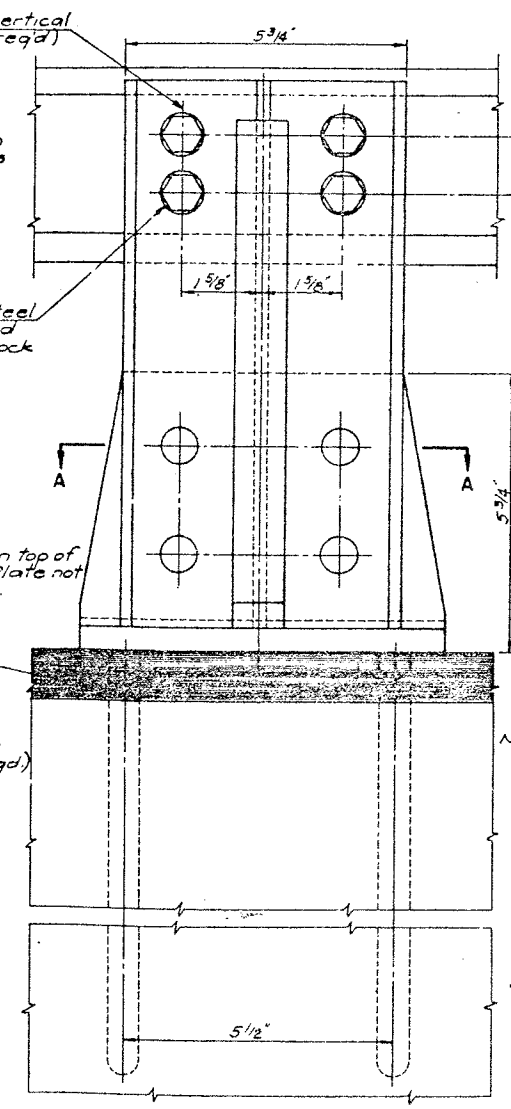

PARTIAL ELEVATION

BRIDGE RAILING DETAILS
Scale: 1/2"=1"

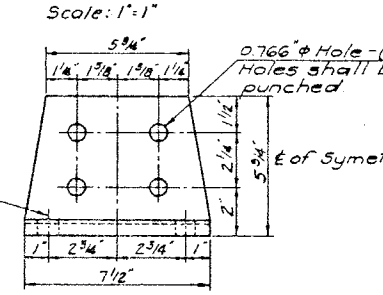

ELEVATION
BASE PLATE EXTRUSION
Scale: 1/4" = 1"

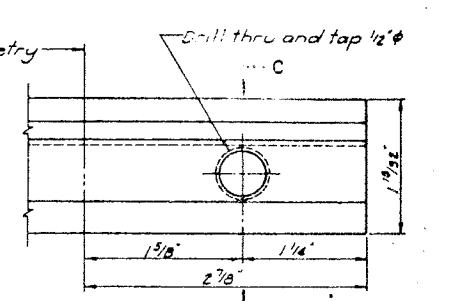

2 Clamp Bars Required per Rail at Post
TRAFFIC RAIL
CLAMP BAR DETAIL
Scale: 1"=1"

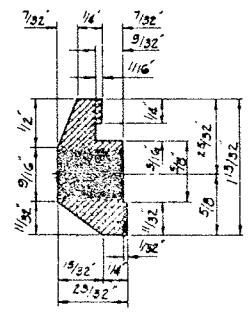

SECTION C-C
Scale: 1"=1"

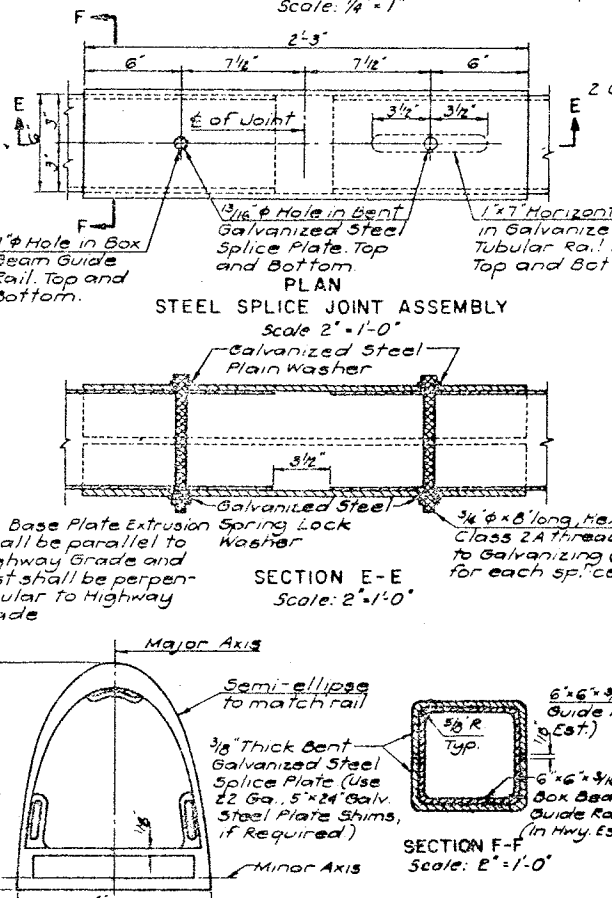

PLAN
STEEL SPLICE JOINT ASSEMBLY
Scale 2"=1'-0"

SECTION E-E
Scale: 2"=1'-0"

RAIL END TAP

SECTION F-F
Scale: 2"=1'-0"

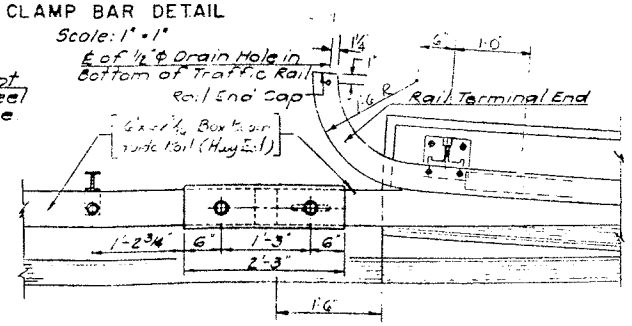

PLAN

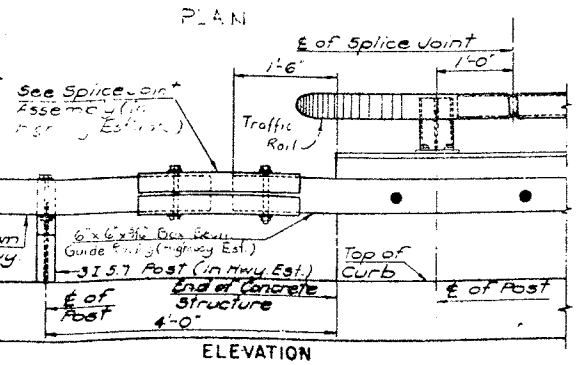

ELEVATION
PARAPET CONNECTION TO BOX BEAM GUIDE RAILING
Scale 3/4"=1'-0"

Notes:

All railing is to be fabricated and erected so that the rail is parallel to the parapet.

Since the finished railing must meet all requirements of fit, alignment and grade to the full satisfaction of the Engineer, it is suggested that complete field measurements be made before any shop fabrication is performed.

Aluminum rails, posts, post bases, clamp bars including stainless steel cap screws and lock washers, rail splices, rivets, end caps, pins, rail terminal ends, aluminum caulking compound and any necessary shims and/or pads and steel splice joint assembly between the end of the parapet and the box beam guide railing including tubular rail splice, end splice plate and anchor studs shall be paid for under the railing item.

Anchor bolts, nuts and washers shall be paid for under Item 20

After the anchor bolt nuts have been placed and tightened to the satisfaction of the Engineer, the bolts shall be cut off 1/8 inch above the nut and peened.

Rails shall be continuous over a minimum of three posts. On HPW type wingwalls the rails may be continuous over two posts.

Aluminum rivets shall be cold driven.

Galvanizing shall be done in accordance with Material Specification M19. Bolts to be galvanized shall have a Class 2A thread fit prior to galvanizing.

Materials used in the manufacture of this railing shall conform to the requirements and/or specifications listed below:

Piece	ASTM Designation	Commercial Alloy & Temper
Aluminum Extrusions (Posts, Post bases, rails, rail splices, clamp bars, pins and rail terminal ends)	B221	6061-T6
Aluminum Rivets	B316	6061-T6
Aluminum Plate Shims	B209	1100-0
Aluminum Rail End Caps	B26	43F or 356F
Steel Plate Shims	A36	
Steel Tubular Rail Splices	A500 Grade B or A501	
Steel Splice Plates	A36	
Steel Splice Bolts, Nuts and Washers	A307	
Steel Anchor Studs	A307	
Stainless Steel Anchor Bolts (100,000 psi. Min. Tensile Strength and 80,000 psi. Min. Yield Point)	A193 Grade B5 or A276 Type 304 or A276 Type 430	
Stainless Steel Cap Screws	A193 Grade B8	
Stainless Steel Spring Lock Washers shall be in accordance with the Military Standard MS3533a		
Stainless Steel Nuts for Anchor Bolts	A 194 Grade 6.	
Stainless Steel Washers for Anchor Bolts	A 167 Type 302 or 304	

Design: AASHO Interim Spec-1964

DESIGNED BY R.L. Rathbone	Rev 3	
DETAILED BY C.A. Mahoney	Rev 2	Sn - J.V.K. 11/68
DETAIL CHECKED BY James R. Wynn	Rev 1	Changed S.S. Grade 7/1/66

BRIDGE NO. 2
INTERSTATE ROUTE 481 OVER DEWITT YARDS
ALUMINUM BRIDGE RAILING - I RAIL

FED. RD. REG. NO.	STATE	FEDERAL AID PROJECT NO.	SHEET NO.	TOTAL SHEETS
1	NEW YORK	~~1-390-2(23)~~ 1-481-2(116)	220	899

INTERSTATE ROUTE CONNECTION 570
BUTTERNUT INTERCHANGE (PHASE 2)
ONONDAGA COUNTY

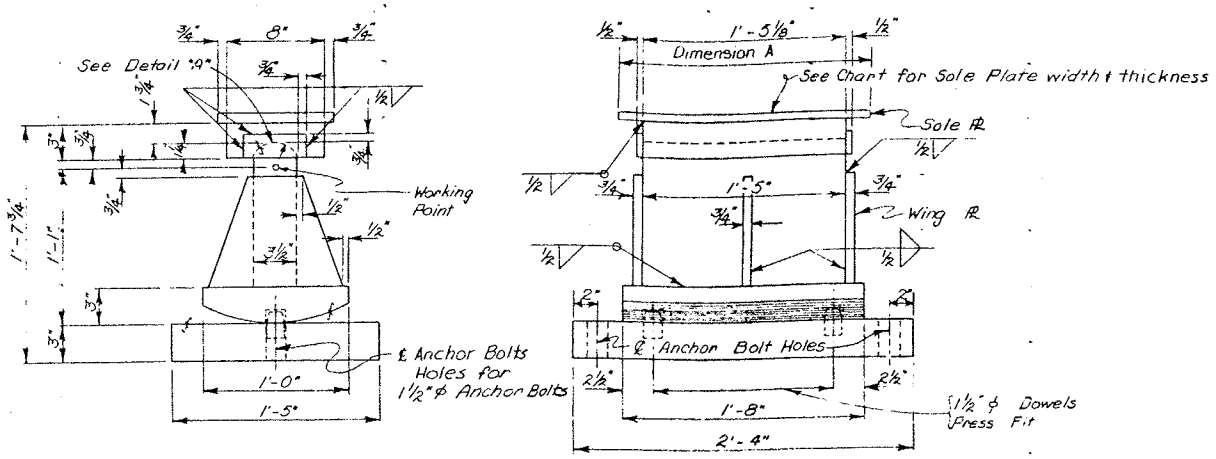

EXPANSION BEARING - TYPE II
Scale: 1½"=1'-0"

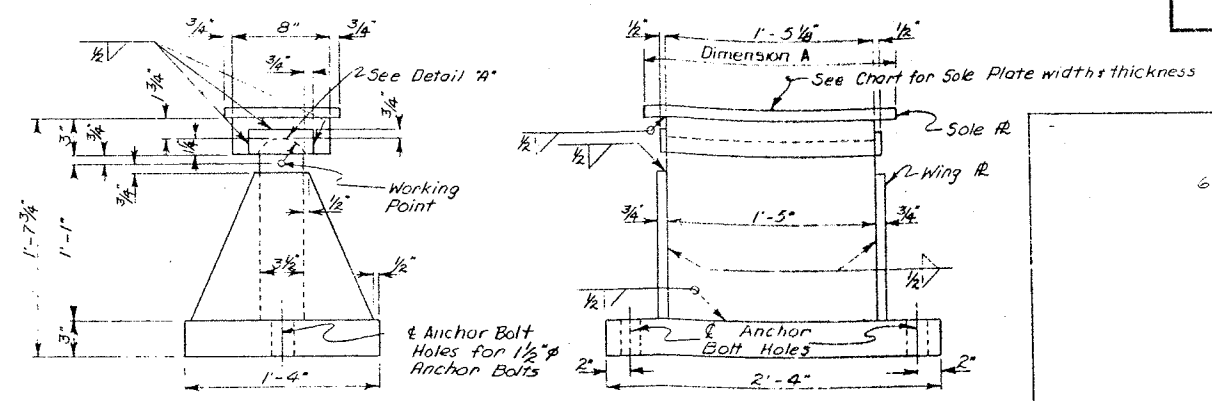

FIXED BEARING - TYPE II
Scale: 1½"=1'-0"

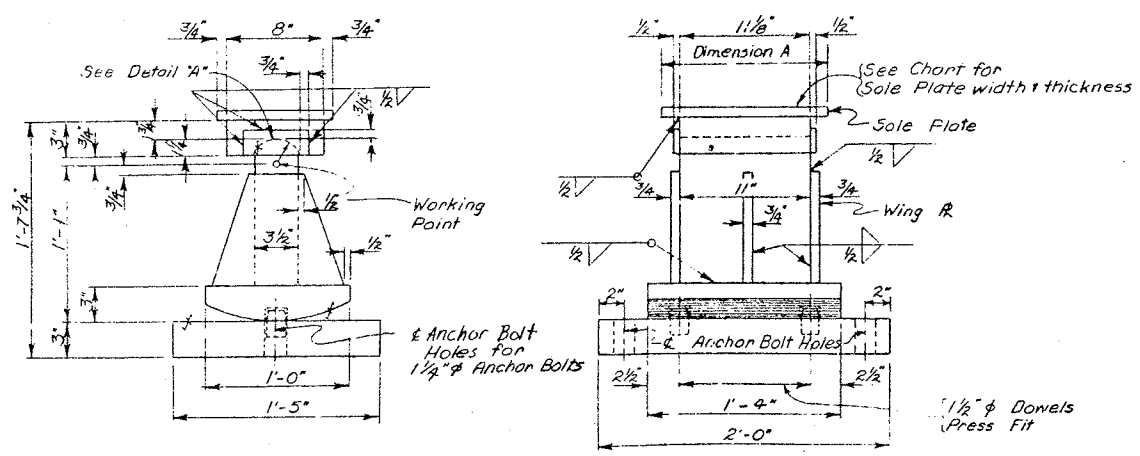

EXPANSION BEARING - TYPE I
Scale: 1½"=1'-0"

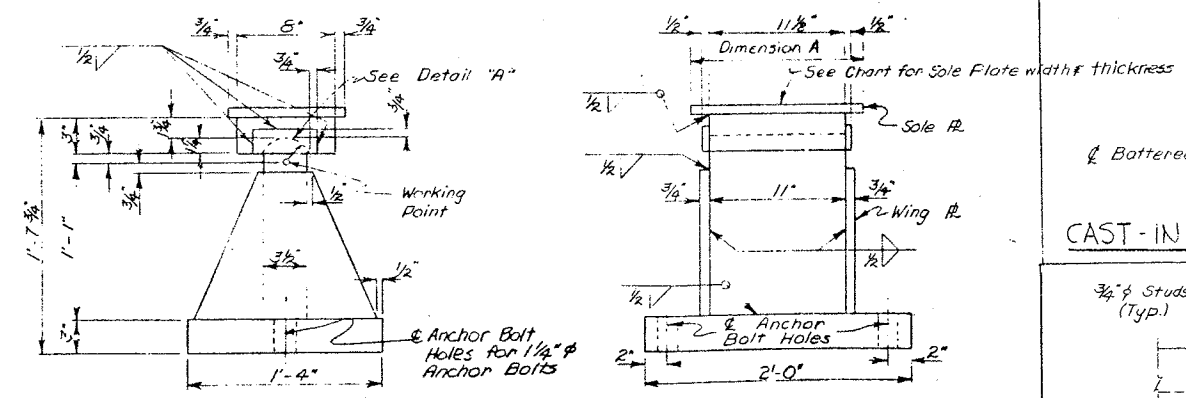

FIXED BEARING - TYPE I
Scale: 1½"=1'-0"

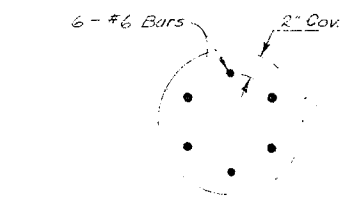

SECTION D-D
Scale: 1½"=1'-0"

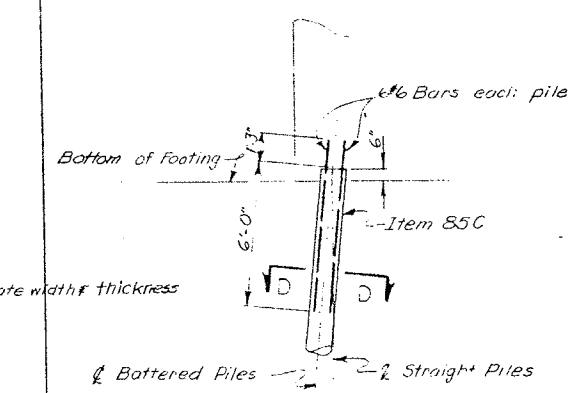

PILE ELEVATION
Scale: ¼"=1'-0"

CAST-IN-PLACE CONCRETE PILES ITEM 85C

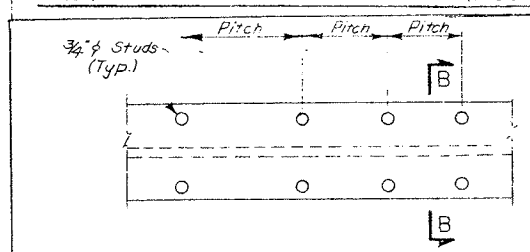

PARTIAL PLAN OF STUDS
Scale: None

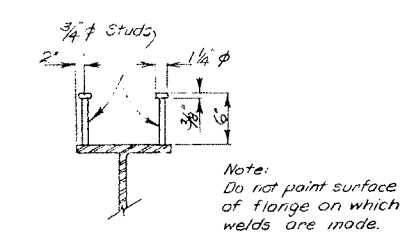

SECTION B-B
Scale: None

STUD SHEAR CONNECTORS ITEM 28B.

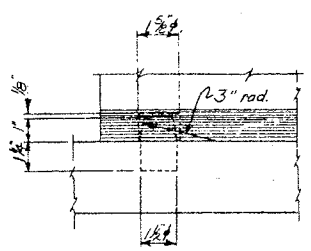

DETAIL OF DOWEL
Scale: 3"=1'-0"

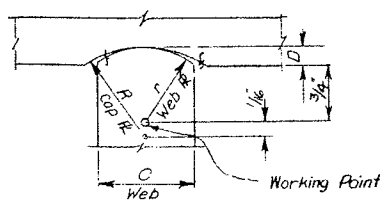

Bearing Type	R	r	C	D
Type I	2 1/16"	2"	3½"	1¼"
Type II	2 1/16"	2"	3½"	1¼"
Type III	2 1/16"	2"	3½"	1¼"

DETAIL A
No Scale

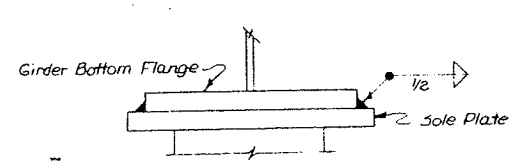

TYPICAL SOLE PLATE
TO GIRDER CONNECTION DETAIL
No Scale

PROJECT ENGINEER R. Parker
IN CHARGE OF F. Eckel
DESIGNED BY
DESIGN CHECKED BY
DETAILED BY J. Dumont
DETAIL CHECKED BY Y.C. Toppos

BRIDGE NO. 2
INTERSTATE ROUTE 481 OVER DEWITT YARDS

BEARINGS

DRAWING NO. 42 OF 50

BIN 1093571

D251438

FED. ROAD NOS. NO.	STATE	FEDERAL AID PROJECT NO.	SHEET NO.
1	N.Y.	IR-481-6(79) BH1-481-6(79)	37

INTERSTATE ROUTE CONNECTION 570
BUTTERNUT INTERCHANGE - PHASE 2
BUTTERNUT INTERCHANGE TO COLLAMER,
SH TO I-7 ONONDAGA COUNTY

DJ Hann 7/5/11
T.W. Gongwer 7-9-13
Pete Kiehlbaugh 10/4/89
9/23/93
9/25/95
02/09/97
08/09/99
12/07/02
11/19/01
8/11/03
P.E.R. 10/13

DRAFTED BY Thomas L. Sayer DATE 11/24/85
CHECKED BY
CHECKED BY
ESTIMATED BY Rick DeLisle
DESIGNED BY Thomas L. Sayer CHECKED BY Rick DeLisle
IN CHARGE OF Rick DeLisle

LOCATION PLAN
Not to scale

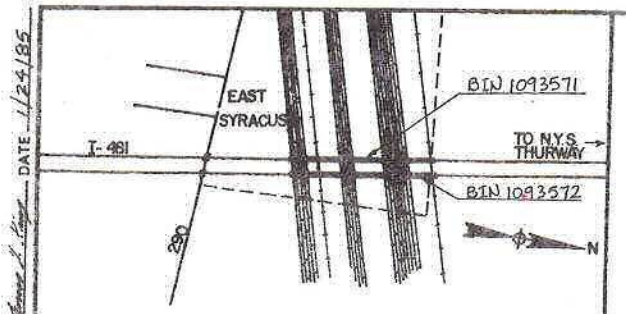

LOAD RATING	H-S LOADING
INVENTORY	OPERATING
H-S 21.7 (39T) L.F. *	H-S 36.3 (65T) L.F. *

Northbound and Southbound Bridges
* L.F. = Load Factor

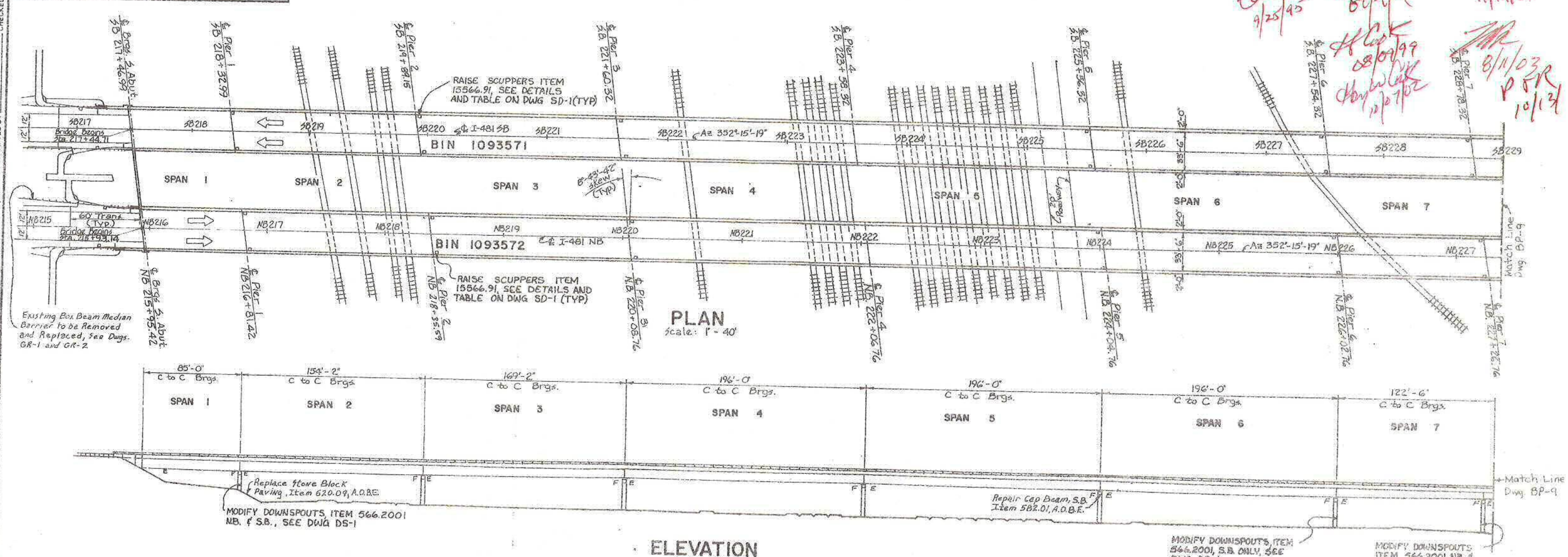

PLAN
Scale: 1" = 40'

ELEVATION
Scale: 1" = 40'

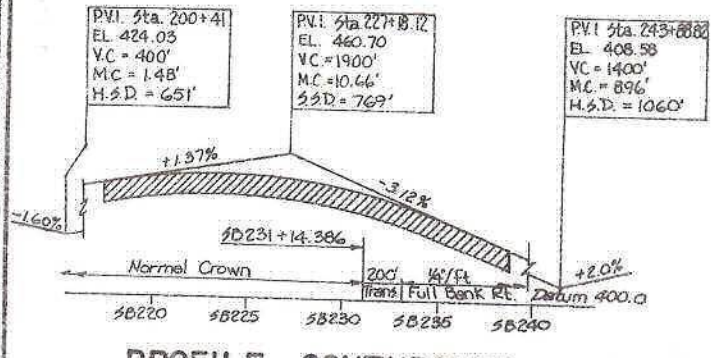

PROFILE SOUTHBOUND
Scale: Horiz. 1" = 500'
Vert. 1" = 40'

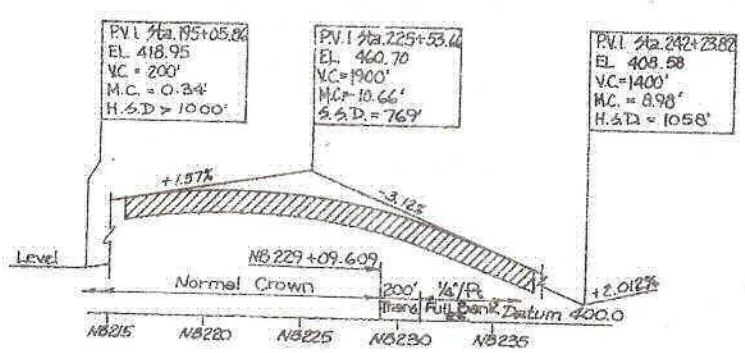

PROFILE NORTHBOUND
Scale: Horiz. 1" = 500'
Vert. 1" = 40'

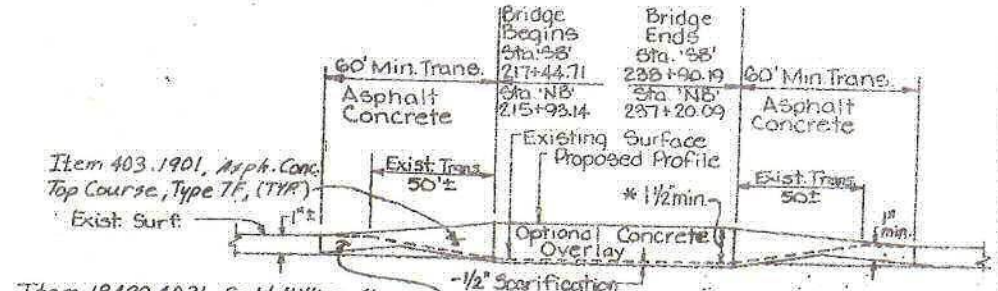

PROPOSED PROFILE
Not to Scale

AS - BUILT REVISIONS

SIGNATURE DATE

BIN 1093571 AND 1093572
SB AND NB OVER CONRAIL

STATE OF NEW YORK
DEPARTMENT OF TRANSPORTATION

DRAWING NO. SCALE DATE SHEET NO.

FED. ROAD REG. NO.	STATE	FEDERAL AID PROJECT NO.	SHEET NO.	TOTAL SHEETS
1	N.Y.	IR-431-(174) BHI 481-0176	39	66

INTERSTATE ROUTE CONNECTION 570
BUTTERNUT INTERCHANGE - PHASE 2
BUTTERNUT INTERCHANGE TO COLLAMER,
SH 70-7 ONONDAGA COUNTY

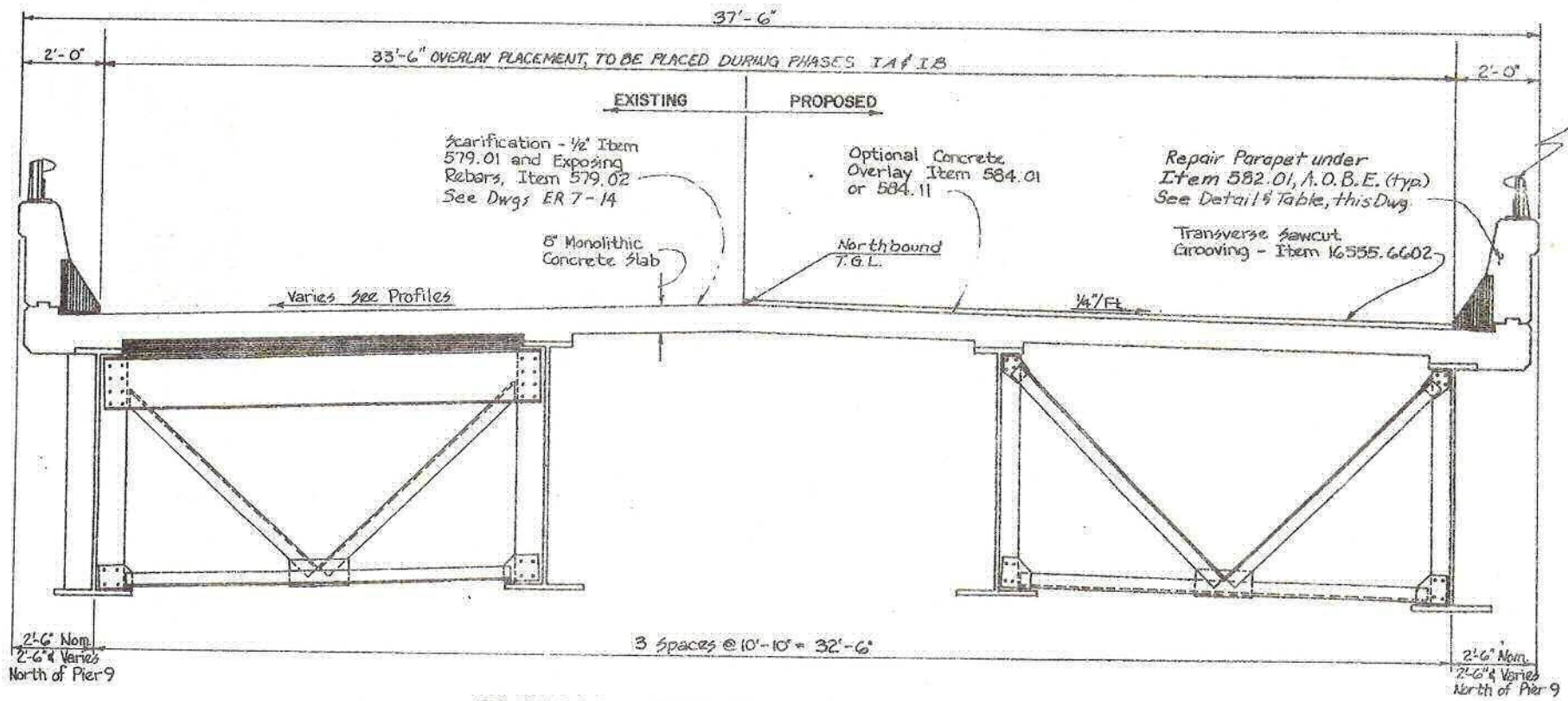

TYPICAL BRIDGE SECTION
(N.B. Bridge Looking North)
Scale: ½" = 1'-0"

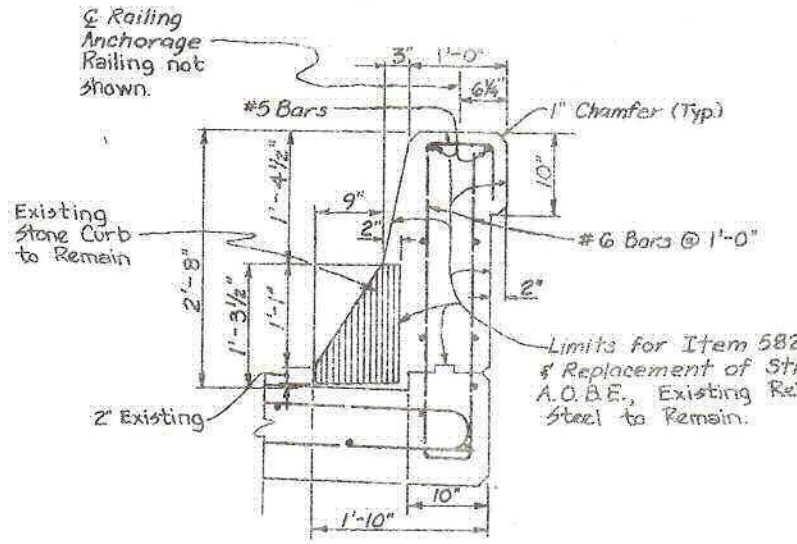

PARAPET REPAIR DETAIL
Scale: 1" = 1'-0"

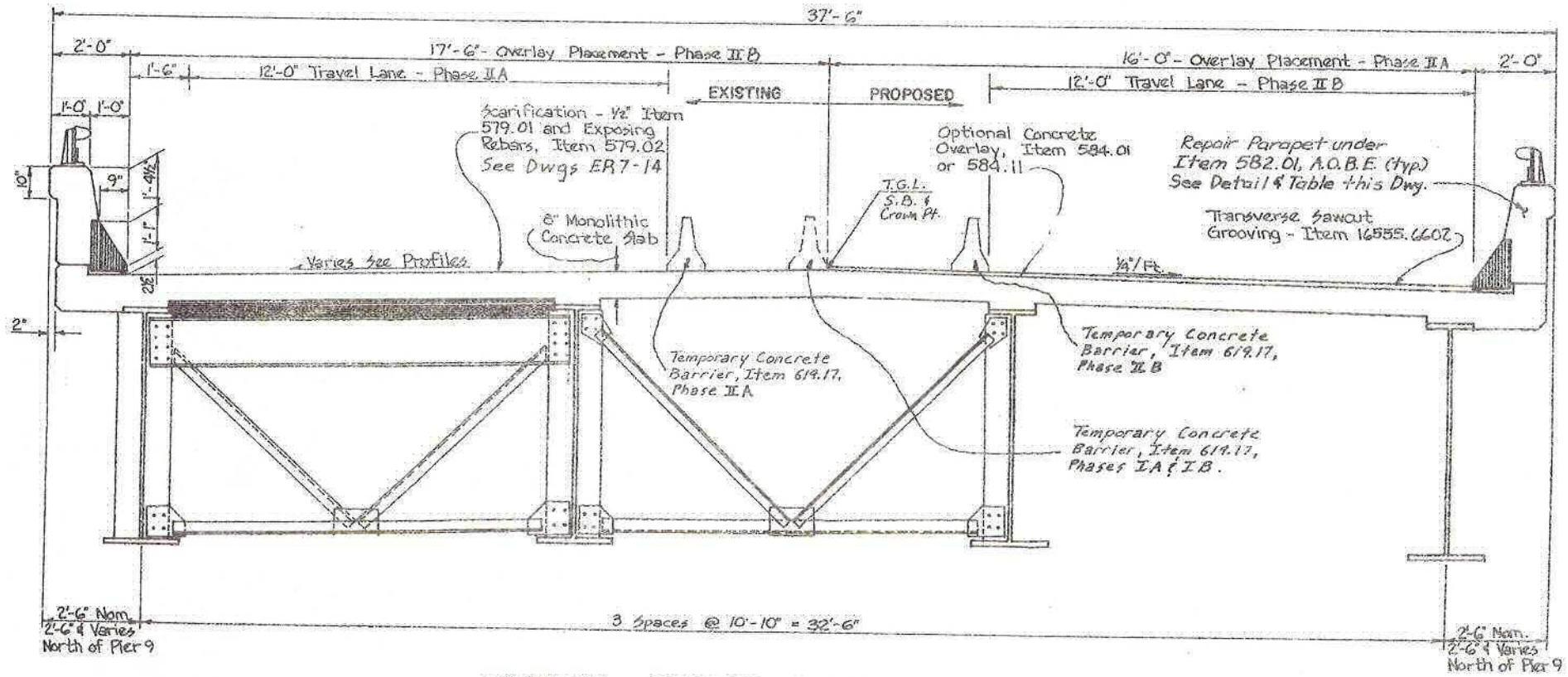

TYPICAL BRIDGE SECTION
(S.B. Bridge Looking North)
Scale: ½" = 1'-0"

REPAIR OF PARAPET WALL Item 582.01			
BIN 1093571		BIN 1093572	
SPAN #	EST. LENGTH	SPAN #	EST. LENGTH
4, Rt. Side	170 Ft.	10, Rt. Side	55'
4, Lt. Side	70 Ft.	15, Lt. Side	20'

AS - BUILT REVISIONS

SIGNATURE DATE

BIN 1093571 AND 1093572
SB AND NB OVER CONRAIL

STATE OF NEW YORK
DEPARTMENT OF TRANSPORTATION

DRAWING NO.	SCALE	DATE	REGION	SHEET NO.
BP10	As shown		3	39

DESIGNED BY _____ DRAFTED BY _____ CHECKED BY _____ ESTIMATED BY _____ CHECKED BY _____ DATE 4/24/85

FED. ROAD REG. NO.	STATE	FEDERAL AID PROJECT NO.	SHEET NO.	TOTAL SHEETS
1	N.Y.	IR-481-(174) BH1 481-(174)	58	66

INTERSTATE ROUTE CONNECTION 570
BUTTERNUT INTERCHANGE - PHASE 2
BUTTERNUT INTERCHANGE TO COLLAMER,
SH 70-7 ONONDAGA COUNTY

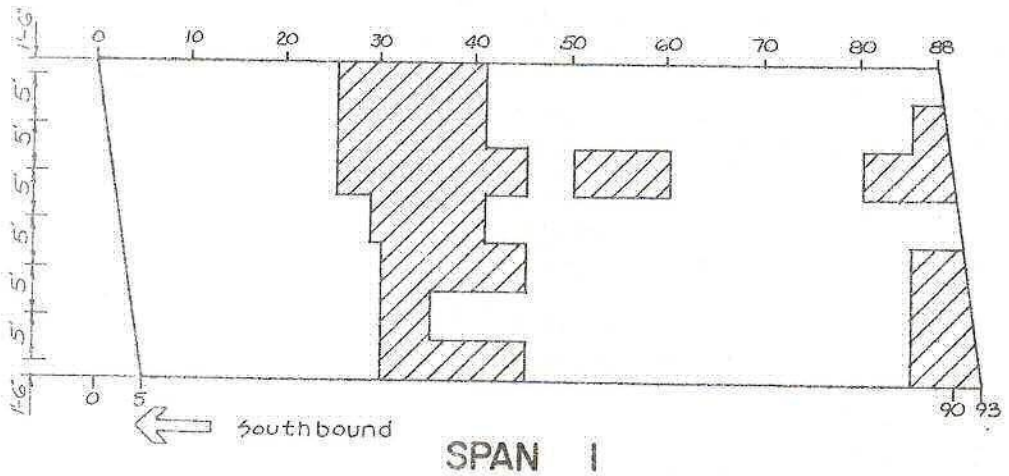

SPAN 1

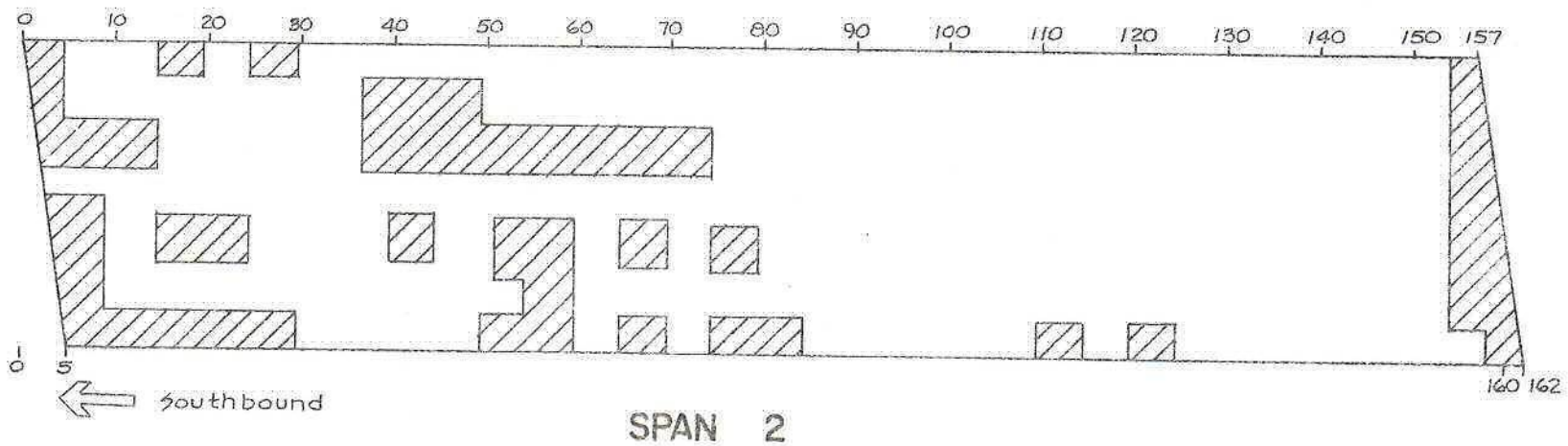

SPAN 2

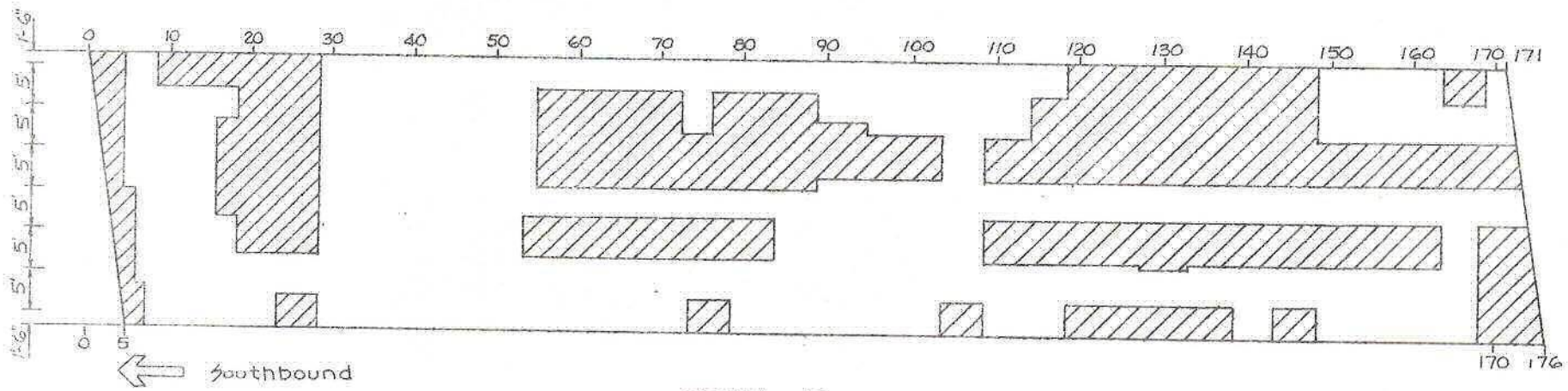

SPAN 3

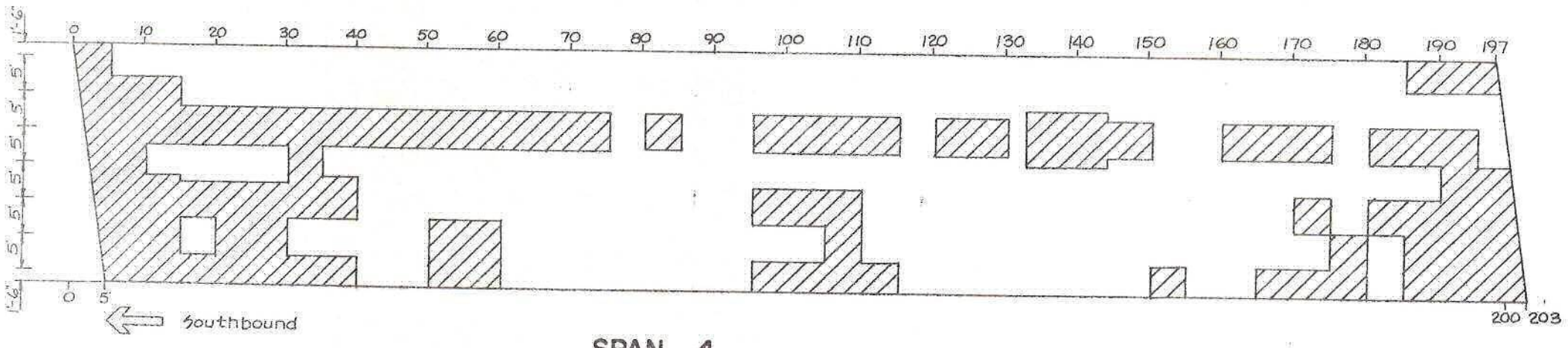

SPAN 4

Approximate Area for Exposing Reinforcing Bars, Item 579.02

AS - BUILT REVISIONS

SIGNATURE DATE

BIN 1093571 I-481 SOUTHBOUND OVER CONRAIL

STATE OF NEW YORK
DEPARTMENT OF TRANSPORTATION

DRAWING No.	SCALE	DATE	REGION	SHEET NO.
ER-7			3	58

D251436

FED. ROAD REG. NO.	STATE	FEDERAL AID PROJECT NO.	SHEET NO.	TOTAL SHEETS
1	N.Y.	[illegible]	60	66

INTERSTATE ROUTE CONNECTION 570
BUTTERNUT INTERCHANGE - PHASE 2
BUTTERNUT INTERCHANGE TO COLLAMER,
SH 70-7 ONONDAGA COUNTY

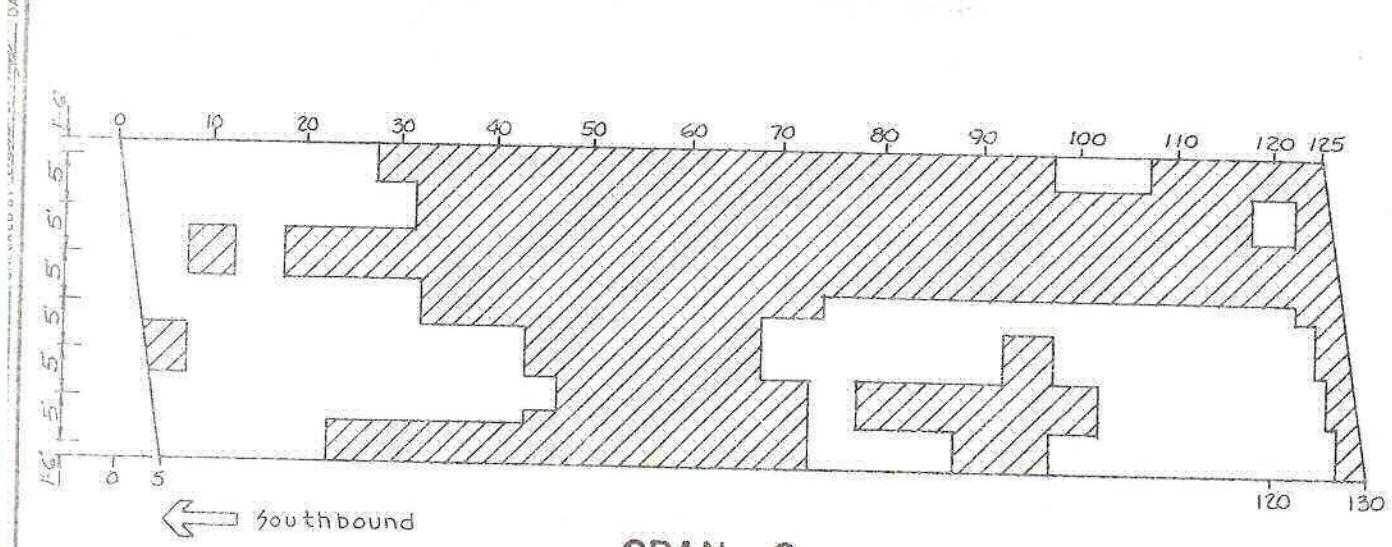

SPAN 9

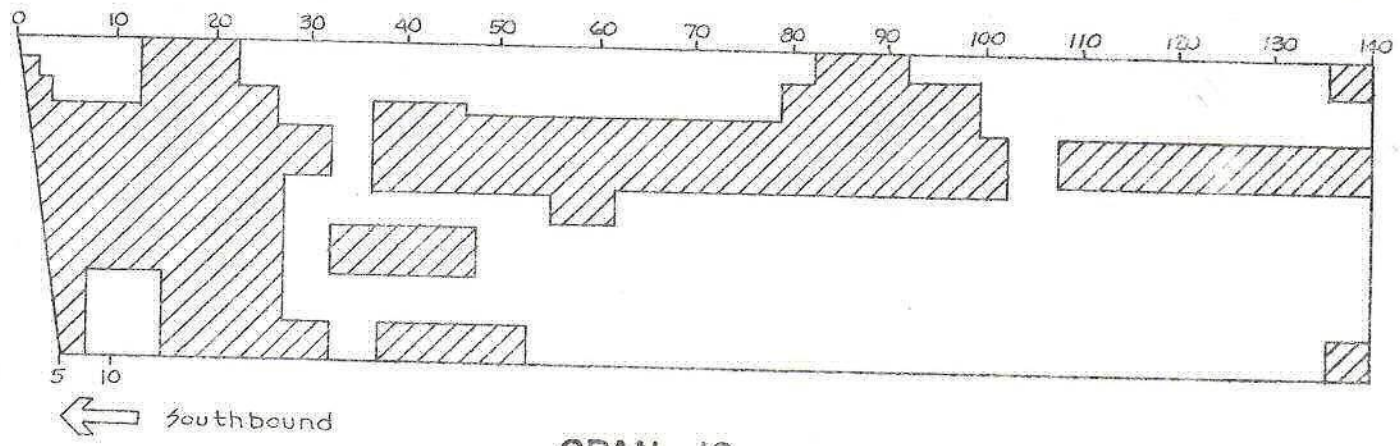

SPAN 10

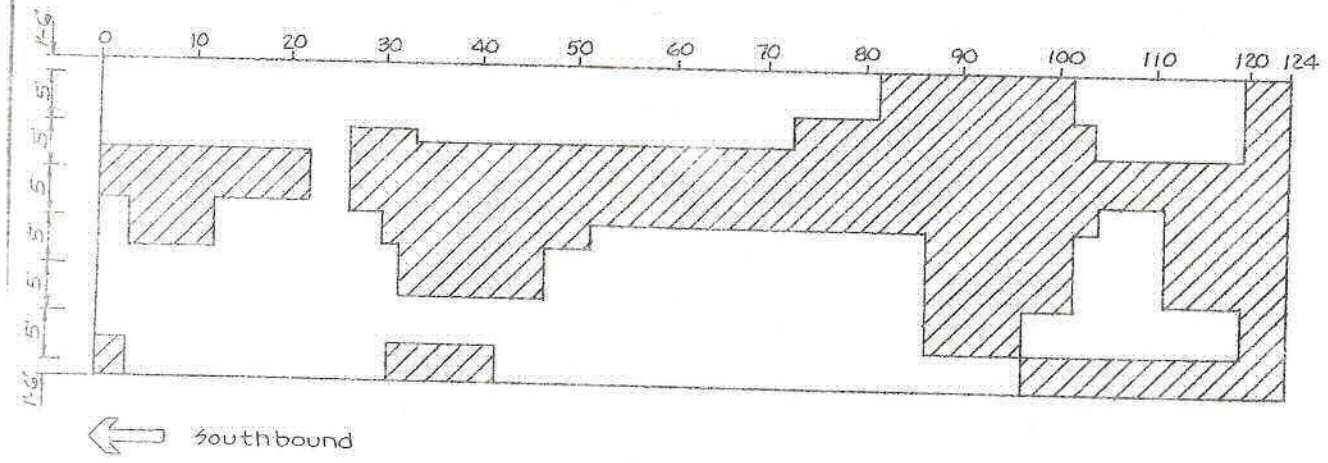

SPAN 11

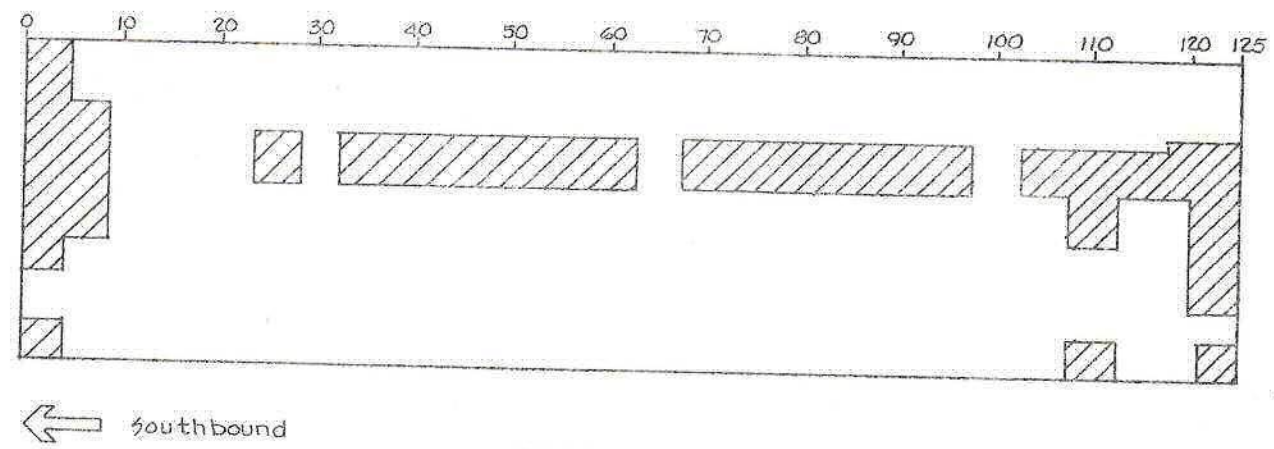

SPAN 12

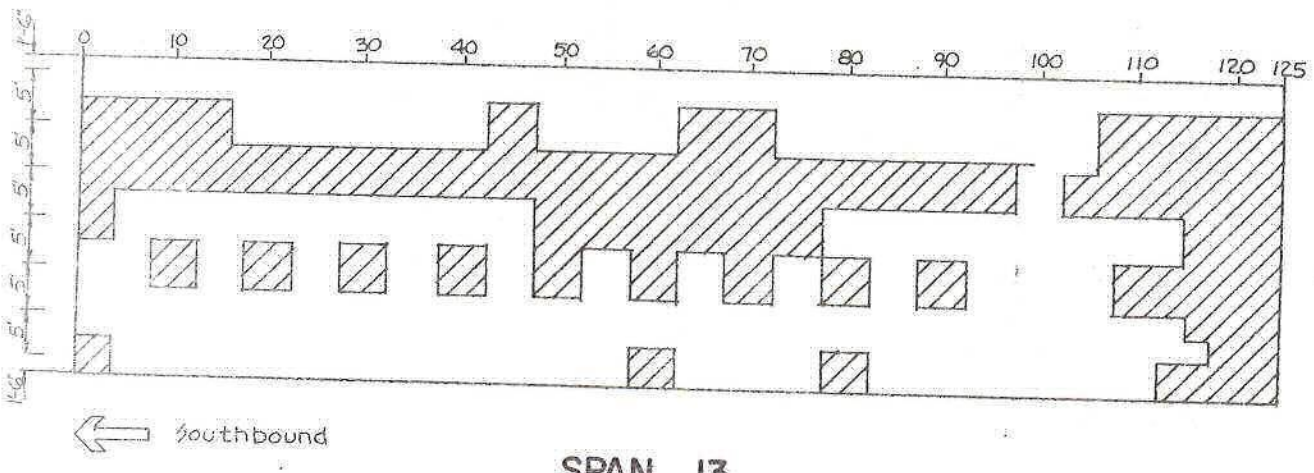

SPAN 13

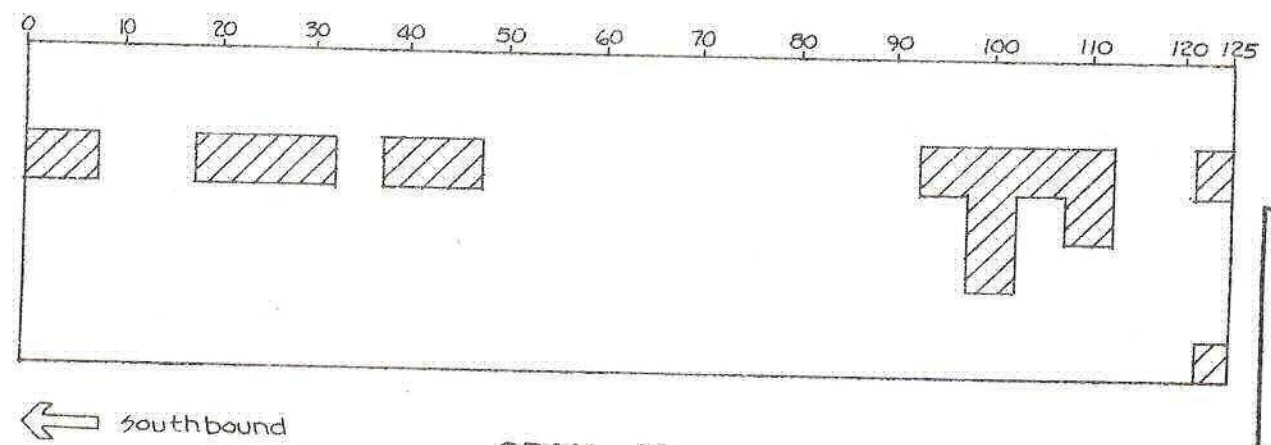

SPAN 14

Approximate Area for Exposing Reinforcing Bars, Item 579.02

AS - BUILT REVISIONS

SIGNATURE DATE

BIN 1093571 I-481 SOUTHBOUND OVER CONRAIL

STATE OF NEW YORK
DEPARTMENT OF TRANSPORTATION

DRAWING No.	SCALE	DATE	REGION	SHEET NO.
ER-9			3	60

D251430

FED. ROAD REG. NO.	STATE	FEDERAL AID PROJECT NO.	SHEET NO.
1	N.Y.	[illegible]	59

INTERSTATE ROUTE CONNECTION 570
BUTTERNUT INTERCHANGE - PHASE 2
BUTTERNUT INTERCHANGE TO COLLAMER
SH 70-7 ONONDAGA COUNTY

DRAFTED BY [illegible] CHECKED BY [illegible] DATE 11/24/85
DESIGNED BY [illegible] CHECKED BY Mark DeCicco ESTIMATED BY [illegible] CHECKED BY [illegible]
CHARGE OF Mark DeCicco 7-2 (5/76)

N

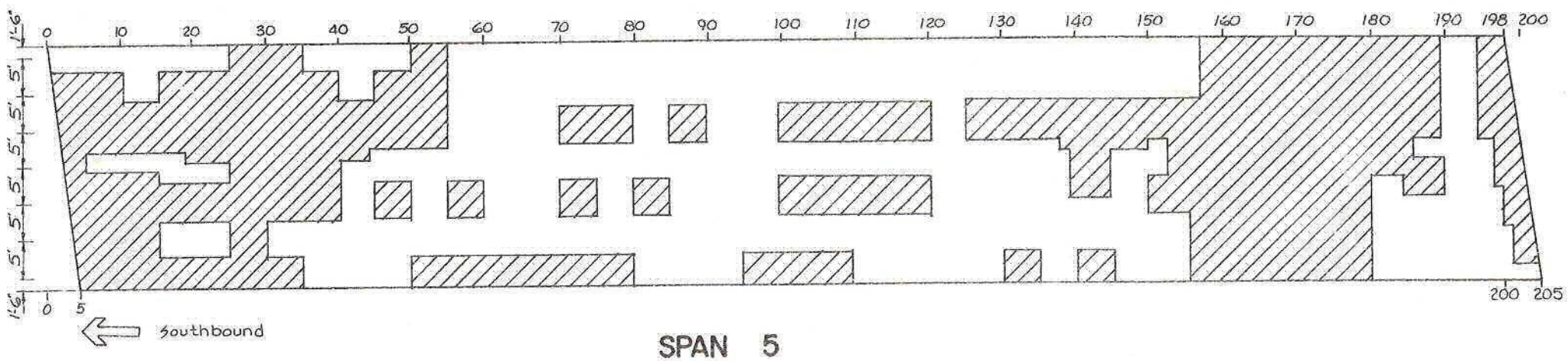

SPAN 5

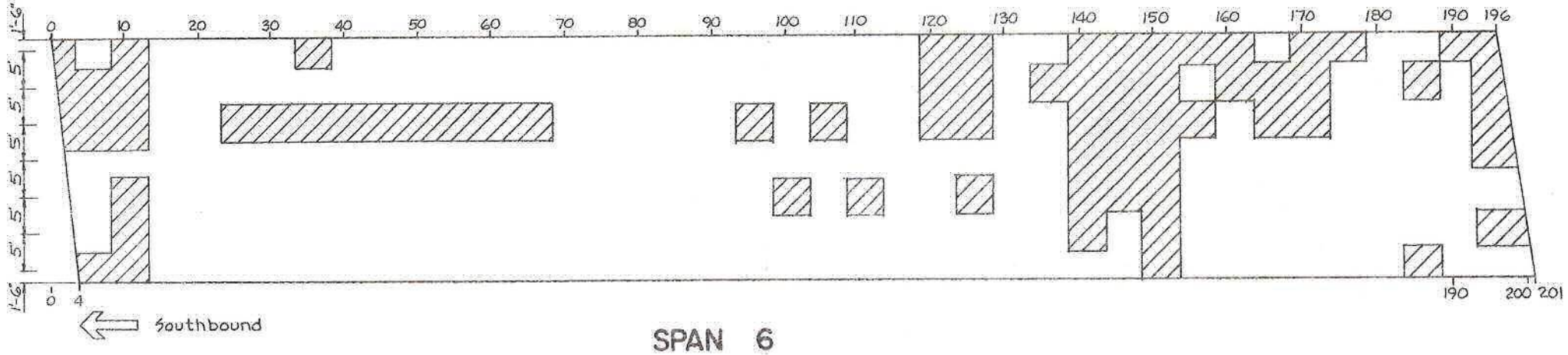

SPAN 6

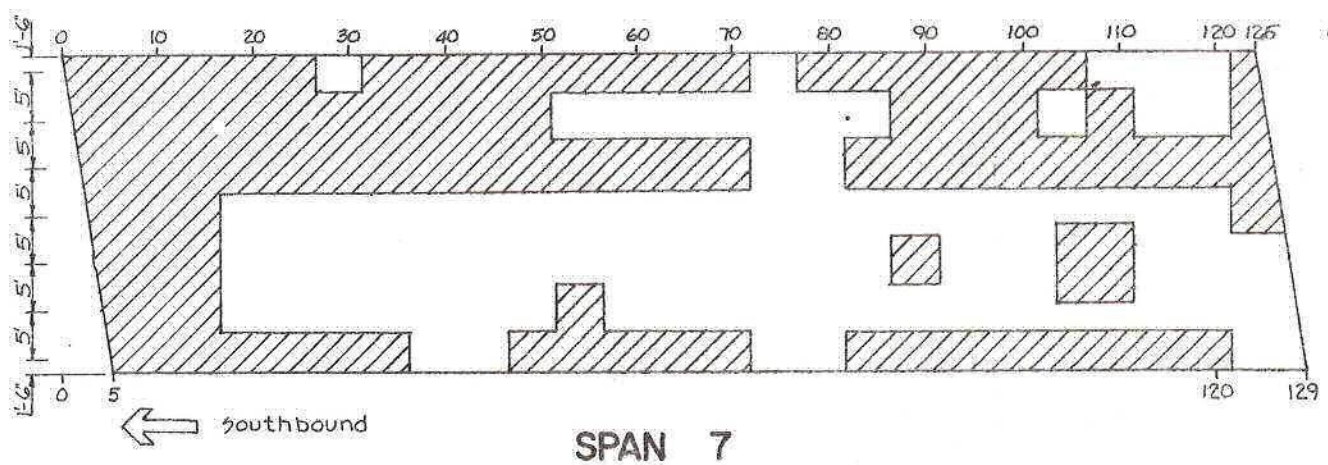

SPAN 7

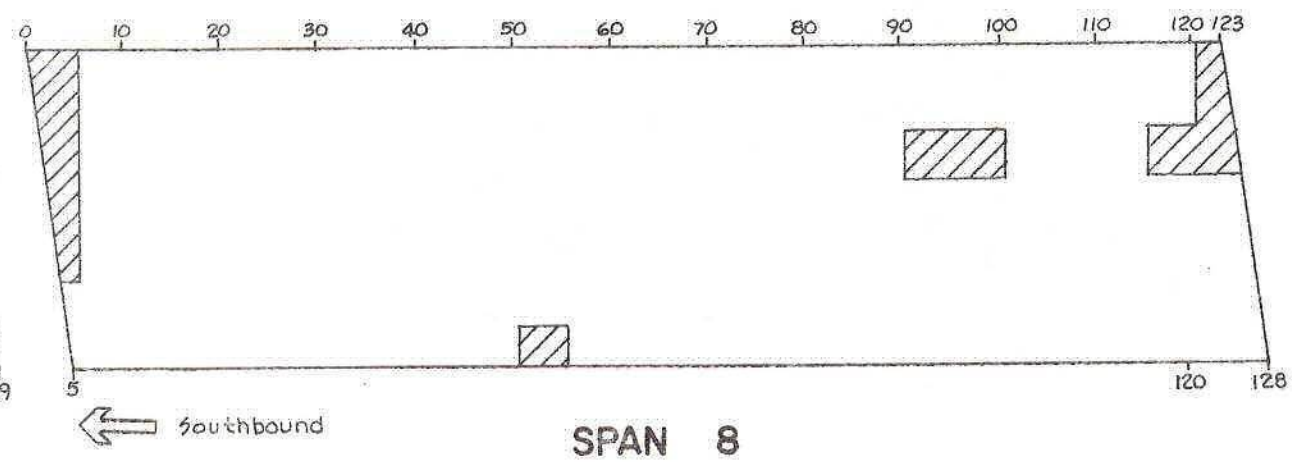

SPAN 8

Approximate Area for Exposing Reinforcing Bars, Item 579.02

AS - BUILT REVISIONS

SIGNATURE DATE

BIN 1093571 I-481 SOUTHBOUN
OVER CONRAIL

STATE OF NEW YORK
DEPARTMENT OF TRANSPORTATIC

DRAWING No. | SCALE | DATE

D251488

FED. ROAD REG. NO.	STATE	FEDERAL AID PROJECT NO.	SHEET NO.
1	N.Y.	IR-481-(179) BHI-481-(178)	61

INTERSTATE ROUTE CONNECTION 370
BUTTERNUT INTERCHANGE - PHASE 2
BUTTERNUT INTERCHANGE TO COLLAMER
SH 70-7 ONONDAGA COUNTY

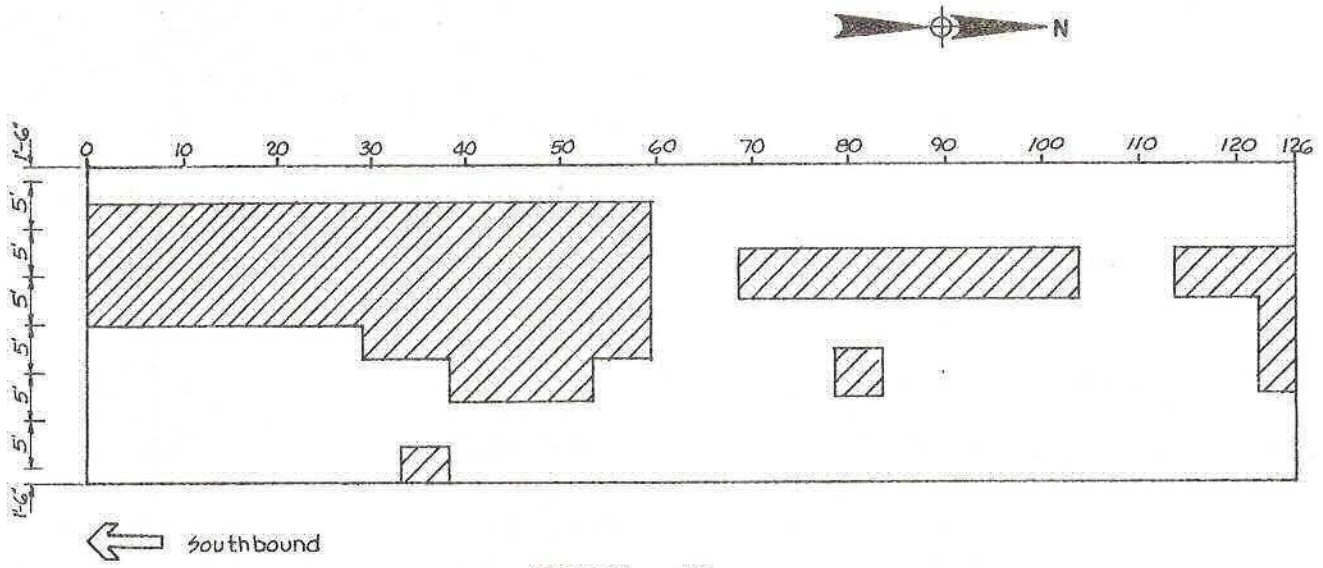

SPAN 15

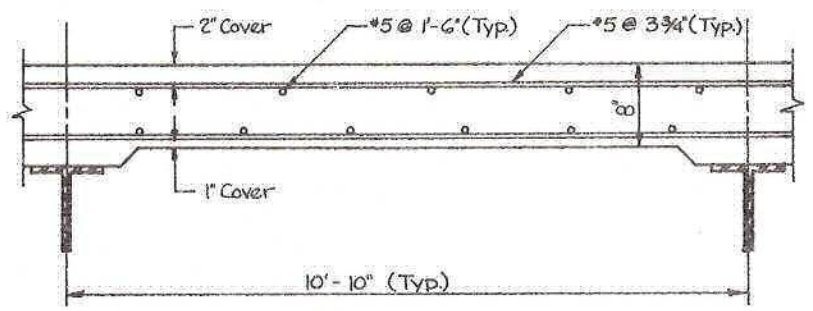

TOP BAR REINFORCEMENT
Not to scale

Approximate Area for Exposing Reinforcing Bars, Item 579.02

AS - BUILT REVISIONS

SIGNATURE DATE

BIN 1093571 I-481 SOUTHBOUN
OVER CONRAIL

STATE OF NEW YORK
DEPARTMENT OF TRANSPORTATIO

DRAWING No.	SCALE	DATE	REGION	SH
ER-10			3	

IN CHARGE OF Mark DeCicco DESIGNED BY Thomas A. Hayes CHECKED BY Mark DeCicco ESTIMATED BY Thomas A. Hayes CHECKED BY DRAFTED BY CHECKED BY DATE 1/24/85

NC 47-2 (5/76)
39783

FED ROAD REG. NO.	STATE	CONTRACT NO.	SHEET NO.	TOTAL SHEETS
1	N.Y.	D259214	296	432

BRIDGE REHABILITATION PROJECT (ELEMENT SPECIFIC)

VARIOUS BRIDGES ON INTERSTATE 481

TOWNS OF DEWITT AND CICERO

ONONDAGA COUNTY

P.I.N. 305613 | B.I.N. 1093571 & 1093572

DRAFTED BY ____ CHECKED BY ____

ESTIMATED BY ____

DESIGNED BY ____

JOB MANAGER ____

DESIGN SUPERVISOR ____

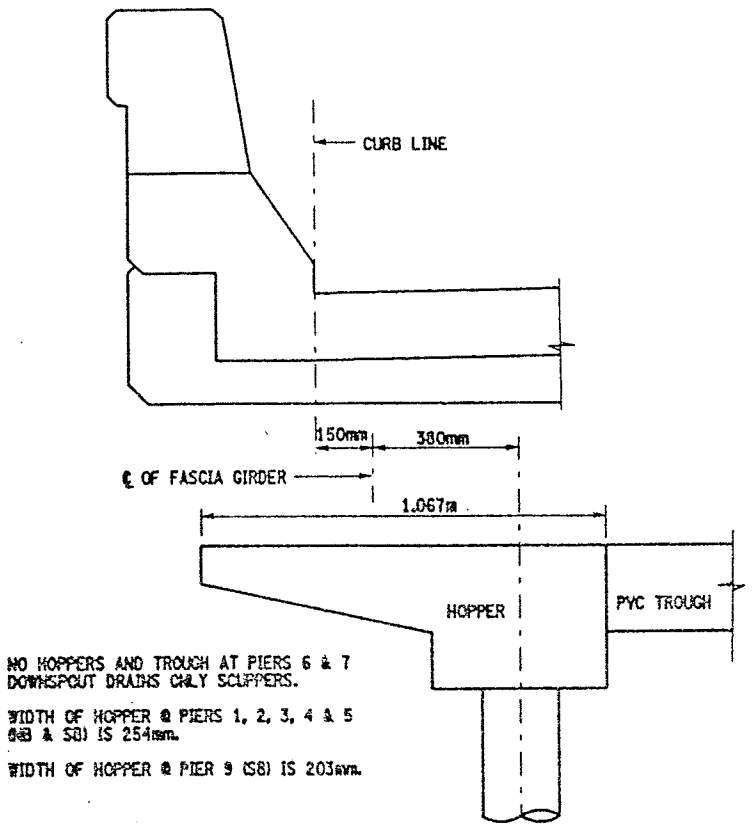

NO HOPPERS AND TROUGH AT PIERS 6 & 7 DOWNSPOUT DRAINS ONLY SCUPPERS.

WIDTH OF HOPPER @ PIERS 1, 2, 3, 4 & 5 (NB & SB) IS 254mm.

WIDTH OF HOPPER @ PIER 9 (SB) IS 203mm.

DRAINAGE SYSTEM HOPPER DETAIL
ELEVATION VIEW

NOT TO SCALE

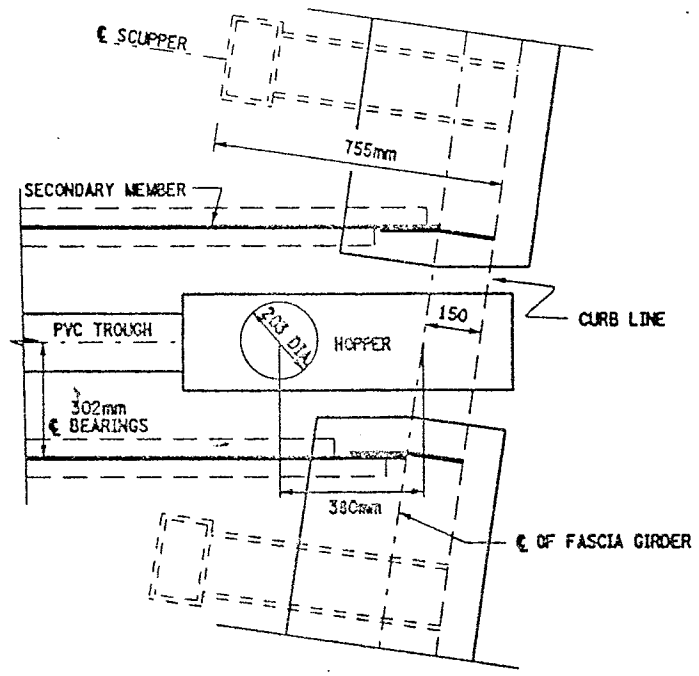

PLAN VIEW OF DRAINAGE DETAIL

NOT TO SCALE

NOTES:

SPLASH PAD & STONE FILLING TO BE PLACED AT EACH MODIFIED DOWNSPOUT LOCATION (PIER'S 2 & 3). STONE FILL SHALL BE PLACED FROM SPLASH PAD TO ℄ OF DITCH LINE.

TYPICAL WIDTH OF STONE FILLING 900mm.

PROPOSED STONE FILL SLOPE TO MATCH EXISTING SLOPE.

PLACEMENT OF SPLASH PAD AND STONE FILL SHALL INCLUDE ITEM 206.02M.

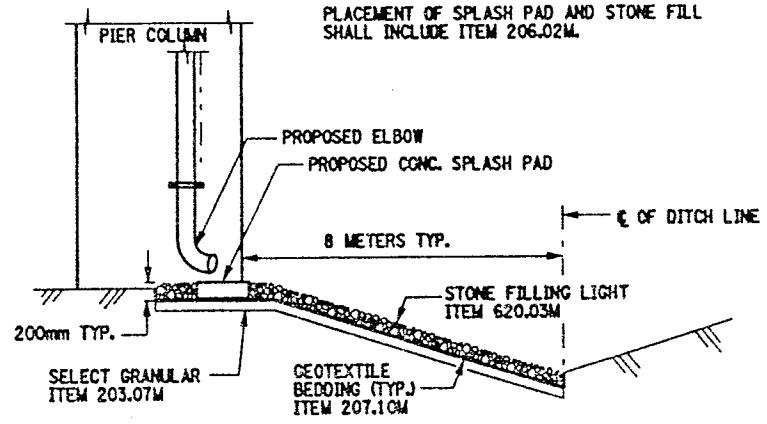

MISC. SPLASH PAD AND STONE FILL DETAIL

NOT TO SCALE

CLEAN DRAINAGE SYSTEM NOTE:

THE FOLLOWING CLOSED DRAINAGE SYSTEMS SHALL BE CLEANED UNDER THIS CONTRACT.

BIN 1093571 - PIERS 1, 2, 3, 4, 5, 6 & 9
BIN 1093572 - PIERS 1, 2, 3, 4, 5 & 6

NOTE, PIER #6 (BOTH STRUCTURES) THE TYPE OF BRIDGE JOINT IS AN ARMORED JOINT WITH COMPRESSION SEAL. THE DOWNSPOUTS ARE CONNECTED TO THE BRIDGE SCUPPERS.

THE CLEANING OF THE EXISTING DRAINAGE SYSTEM (ITEM 203.18M) SHALL BE FROM HOPPER (FASCIA GIRDER) TO HOPPER (FASCIA GIRDER) AND SHALL INCLUDE THE PVC TROUGH AND THE ENTIRE DOWNSPOUT SYSTEM (DIA. OF DOWNSPOUTS VARY) FROM HOPPERS TO OUTLET. REFER TO DWG. NO. D017-1 THRU DWG. NO. D017-4 FOR DRAINAGE DETAILS AND PROPOSED MODIFICATIONS TO PIER DOWNSPOUTS.

FOR QUANTITIES OF ITEMS SEE DRAINAGE RUN TABLE ON DRAWING NO. D017-3.

CONTRACTOR SHALL TAKE CARE WHEN PERFORMING CLEANING OPERATION NOT TO DAMAGE THE EXISTING DRAINAGE SYSTEM. ANY DAMAGE CAUSED BY CONTRACTOR'S OPERATIONS SHALL BE REPAIRED OR REPLACED AS DEEMED NECESSARY BY THE ENGINEER AT NO ADDITIONAL COST TO THE STATE.

DRAINAGE RUN TABLE ON DWG. NO. D017-3, THE DRAINAGE TROUGHS ARE DIVIDED AT MID-PINT OF PIER.

SEE ORIGINAL CONTRACT PLANS F.I.S.H. 70-7 FOR EXISTING PIER ELEVATIONS.

SEE DRAWING NO. D017-4 FOR PROPOSED PIER DOWNSPOUT DETAILS.

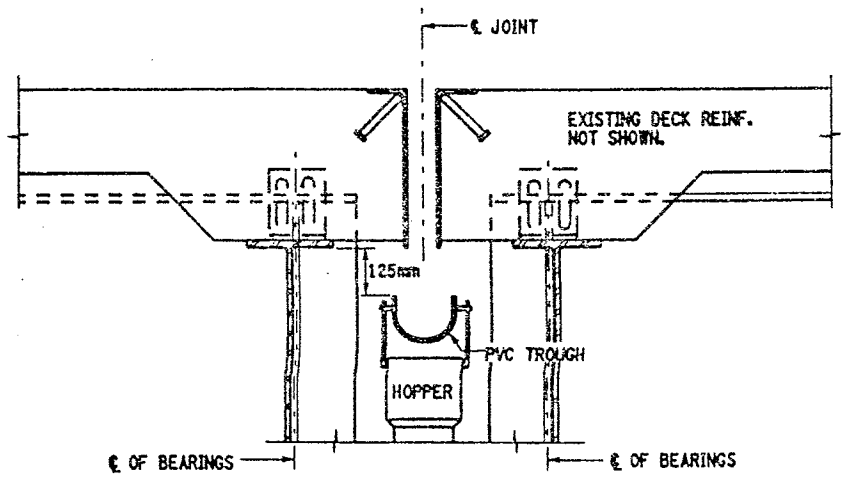

EXISTING PIER
OPEN JOINT TYPICAL

BIN 1093571 - PIERS 1, 2, 3, 4, 5 & 9
BIN 1093572 - PIERS 1, 2, 3, 4 & 5

NOT TO SCALE

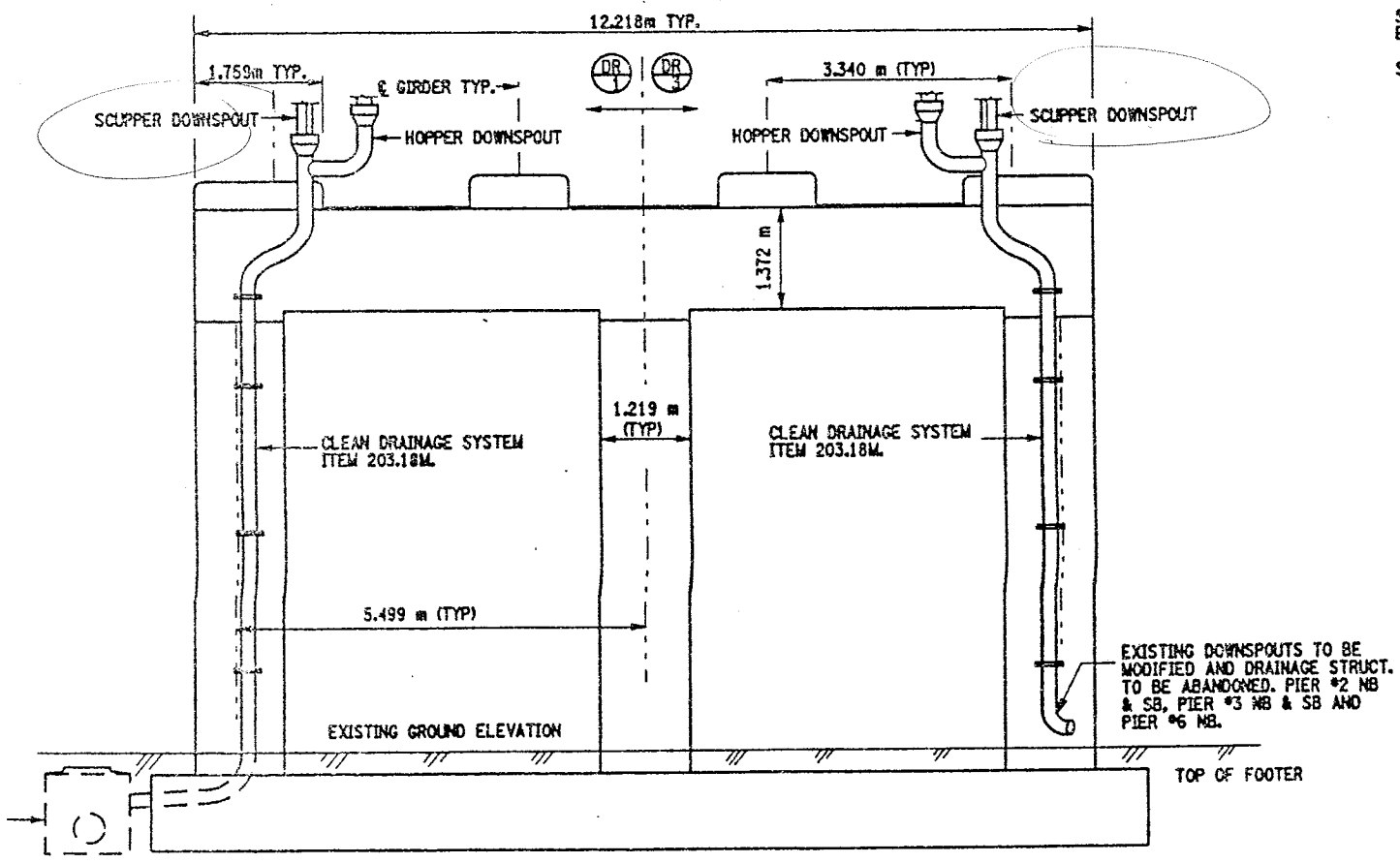

TYPICAL PIER DETAIL

NOT TO SCALE

ITEMS USED:

ITEM 203.07M - SELECT GRANULAR FILL, (CM)
ITEM 207.10M - GEOTEXILE BEDDING, (SM)
ITEM 203.18M - CLEAN CLOSED DRAINAGE SYSTEMS (M)
ITEM 203.19M - CLEAN DRAINAGE STRUCTURES & MANHOLES (EA)
ITEM 620.03M - STONE FILL, LIGHT, (CM)

ALL DIMENSIONS ARE IN mm UNLESS OTHERWISE NOTED

AS BUILT REVISIONS

SIGNATURE ____ DATE ____

INTERSTATE 481 OVER CSX RR YARD

DRAINAGE CLEANING DETAILS

STATE OF NEW YORK
DEPARTMENT OF TRANSPORTATION

FILENAME	REGION	DATE	DRAWING NO.
305613AE.DS1	3	10/02	D017-8

FED ROAD REG. NO.	STATE	CONTRACT NO.	SHEET NO.	TOTAL SHEETS
1	N.Y.	D259214	297	432

BRIDGE REHABILITATION PROJECT (ELEMENT SPECIFIC)
VARIOUS BRIDGES ON INTERSTATE 481
TOWNS OF DEWITT AND CICERO
ONONDAGA COUNTY
P.I.N. 305613 B.I.N. 1093571

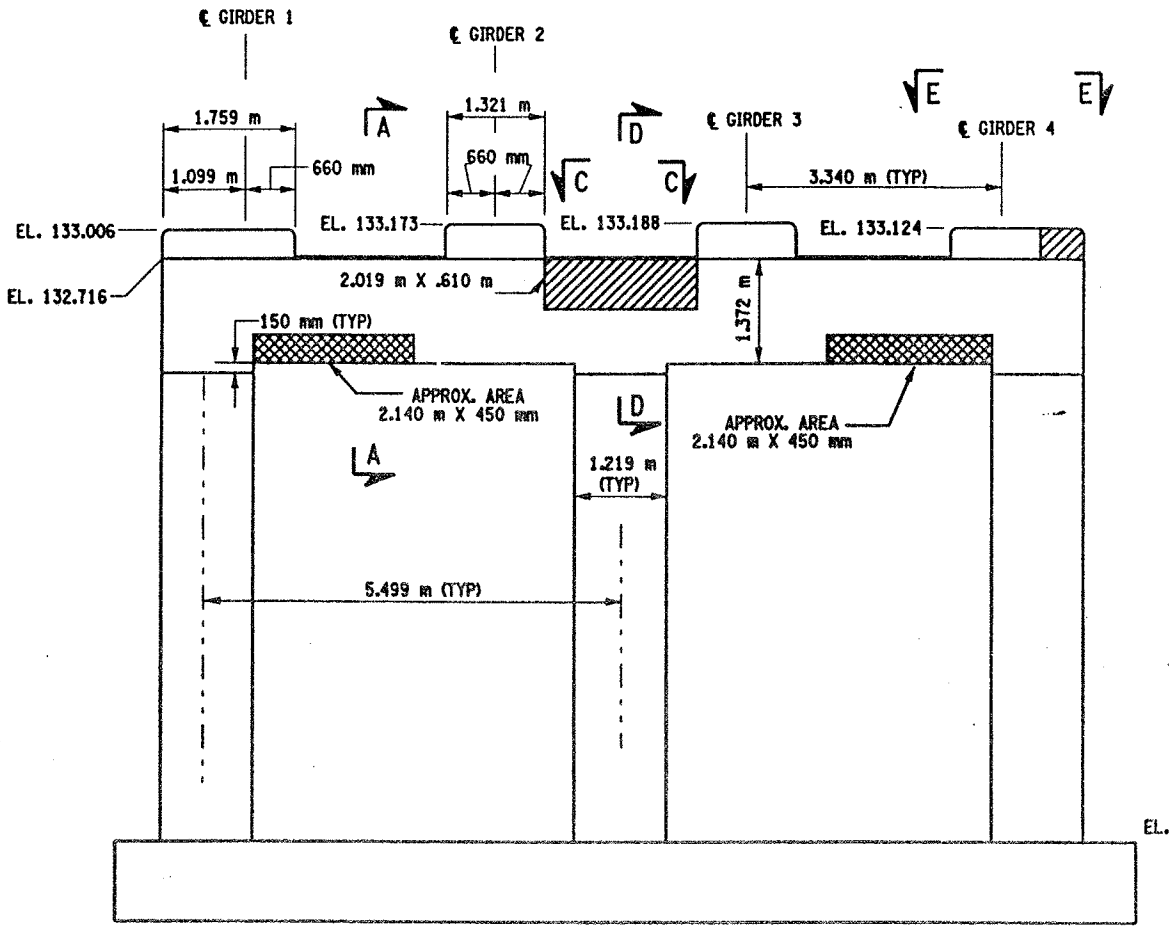

PIER 1 - FRONT FACE (LOOKING NORTH)
BIN 1093571
SCALE: 1 TO 50

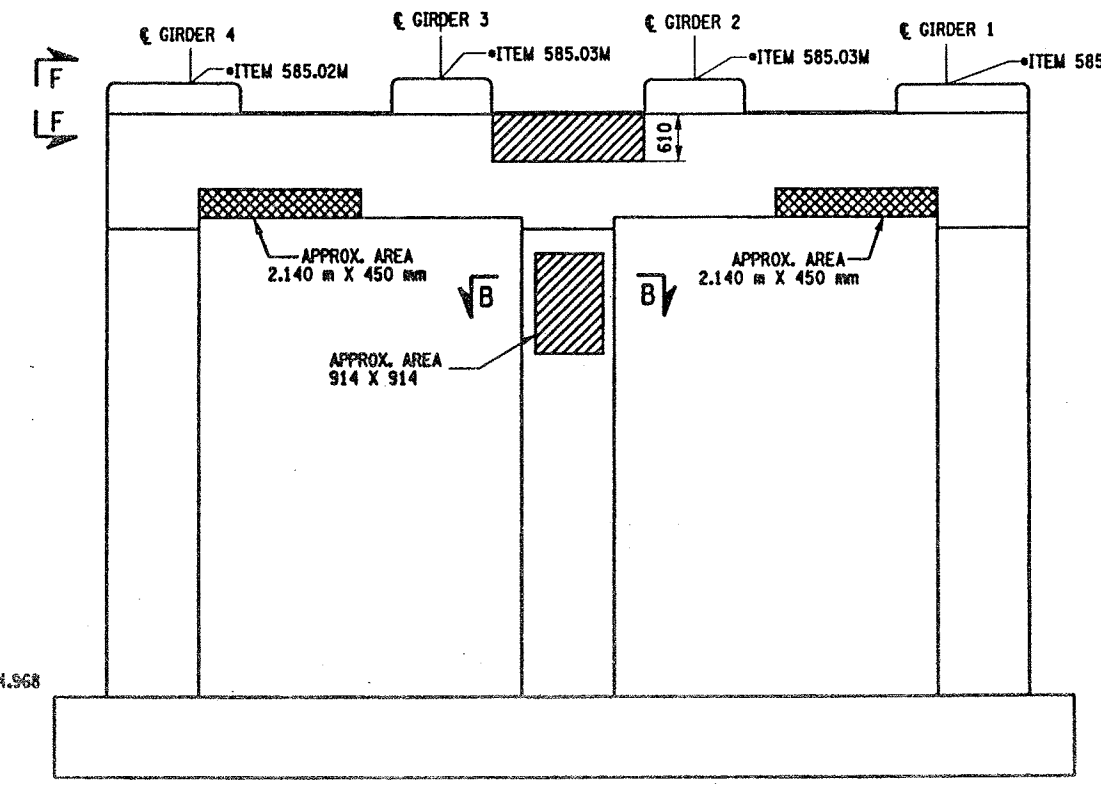

PIER 1- BACK FACE (LOOKING SOUTH)
BIN 1093571
SCALE: 1 TO 50

NOTES:

1. ALL REINFORCEMENT TO REMAIN.
2. RESTORE TO ORIGINAL DIMENSIONS.
3. PEDESTALS NUMERICALLY NUMBERED FROM WEST TO EAST.
4. FOR THE CONCRETE REPAIR AREAS, THE CONCRETE SHALL BE REMOVED TO AT LEAST 40mm MIN. BEYOND THE ENCOUNTERED REINFORCEMENT AND TO SOUND CONCRETE, A.O.B.E.
5. ELEVATIONS SHOWN ARE FROM ORIGINAL CONTRACT PLANS F.I.S.H. 70-7 AND ARE FOR REFERENCE ONLY.
6. REMOVAL DIMENSIONS SHOWN ON PLANS ARE ESTIMATED AND SHALL BE FIELD VERIFIED BY THE CONTRACTOR PRIOR TO BEGINNING OF REMOVAL OPERATIONS A.O.B.E.
7. PERFORM BEARING RESTORATION TO ALL EXPANSION BEARINGS (TO INCLUDE RESETTING OF UNDEREXTENDED OR OVEREXTENDED BEARINGS). SEE DWG. BR-10 & BR-11 FOR BEARING RESTORATION DETAILS.
8. SEE DWG. PR17-2S FOR SECTIONS A-A, B-B, D-D, E-E AND F-F.
9. ALL CONCRETE REMOVAL SHALL BE SAWCUT TO PRODUCE NEAT REMOVAL LINES. COST TO BE INCLUDED IN THE PRICE BID FOR ITEM 582.05M AND ITEM 582.07M.
10. CONTRACTOR SHALL REMOVE DEBRIS FROM TOP OF PEDESTALS AND TOP OF CAP BEAM. COST TO BE INCLUDED IN THE PRICE BID FOR VARIOUS OTHER ITEMS OF CONTRACT.

LEGEND:

ITEM 582.05M - REMOVAL OF STRUCTURAL CONCRETE- REPLACE WITH CLASS A CONCRETE. (CM)

ITEM 582.07M - REMOVAL OF STRUCTURAL CONCRETE - REPLACE WITH VERTICAL OVER-HEAD PATCH MATERIAL. (SM)

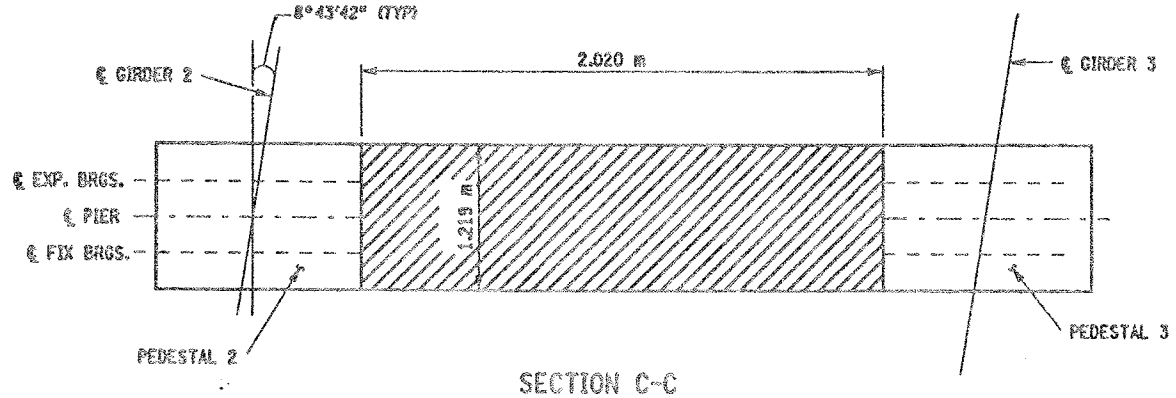

SECTION C-C
NOT TO SCALE

JACKING NOTES:

THE METHOD OF LIFTING SHALL BE APPROVED BY THE DEPUTY CHEIF ENGINEER (STRUCTURES), DSES, TWO WEEKS PRIOR TO THE START OF THE WORK.

NO LIFTING WILL BE ALLOWED UNTIL ALL TEMPORARY SUPPORTS ARE SECURED.

WHEN POSSIBLE, THERE WILL BE NO LIVE LOAD DURING LIFTING.

LIFTING SHALL BE CONFINED TO ONE END OF A SPAN AT ANY ONE TIME.

IF THE CONTRACTOR ELECTS TO LIFT ONLY ONE GIRDER AT A TIME PER PIER (TO A MAXIMUM OF 3 mm TO REMOVE LOAD FROM BEARING), NO VEHICULAR TRAFFIC RESTRICTIONS WILL BE REQUIRED AS STATED IN THE SPECIFICATION SECTION 585-STRUCTURAL LIFTING OPERATIONS.

WHERE THE CONTRACTOR IS REQUIRED TO PERFORM BEARING RESTORATION (SEE BR-11) AS WELL AS CONCRETE REPAIRS REQUIRING STRUCTURAL LIFTING, ONLY ONE STRUCTURAL LIFTING PAYMENT WILL BE MADE.

• PERFORM STRUCTURAL LIFTING UNDER ITEM 585.02M - STRUCTURAL LIFTING OPERATIONS - TYPE B (LIFTING AT A PIER) OR ITEM 585.03M - STRUCTURAL LIFTING OPERATIONS - TYPE C (LIFTING AT A PIER WHERE THE CONTRACTOR SHALL BE REQUIRED TO LIFT OFF THE FOOTING AND/OR GROUND LEVEL.

JACKING LOADS:

D.L. = 75 MT
L.L. = 50 MT
TOTAL = 125 MT

BRIDGE BEARING RESTORATION NOTES:

1. BRIDGE BEARING RESTORATION ITEM 15565.4302M SHALL INCLUDE ALL DESIGNATED WORK AS PER THE SPECIFICATION.
2. STRUCTURAL LIFTING SHALL BE USED WITH ALL EXPANSION BEARING RESTORATION.
3. IF THE CONTRACTOR ELECTS TO LIFT ONLY ONE GIRDER AT A TIME PER SPAN (TO A MAXIMUM OF 3 mm TO REMOVE LOAD FROM BEARINGS), NO VEHICULAR TRAFFIC RESTRICTIONS WILL BE REQUIRED AS STATED IN SPECIFICATIONS SECTON 585-STRUCTURAL LIFTING OPERATIONS.
4. BEARING RESTORATION SHALL AS A MINIMUM, AND IN ALL CASES INCLUDE REPLACEMENT OF BRONZE PLATE.
5. FIXED BEARING TO BE CLEANED IN PLACE. DO NOT DISASSEMBLE.

LIST OF ITEMS USED:

ITEM 15565.4302M	- BRIDGE BEARING RESTORATION (EA)
ITEM 582.05M	- REMOVAL OF STRUCTURAL CONCRETE - REPLACE WITH CLASS A CONCRETE (CM)
ITEM 582.07M	- REMOVAL OF STRUCTURAL CONCRETE - REPLACE WITH VERTICAL OVERHEAD PATCH MATERIAL (SM)
ITEM 585.02M	- STRUCTURAL LIFTING OPERATIONS - TYPE B (EA)
ITEM 585.03M	- STRUCTURAL LIFTING OPERATION - TYPE C (EA)

ALL DIMENSIONS ARE IN mm UNLESS OTHERWISE NOTED

AS BUILT REVISIONS

SIGNATURE DATE

INTERSTATE 481 SB
OVER
CSX RAILROAD YARD
PIER 1

STATE OF NEW YORK
DEPARTMENT OF TRANSPORTATION

FILENAME	REGION	DATE	DRAWING NO.
305613AE.P1A	3	10/02	PR17-1S

DESIGNED BY ____ CHECKED BY ____
DRAFTED BY ____
ESTIMATED BY ____
JOB MANAGER ____
DESIGN SUPERVISOR ____
CHECKED BY ____

FED ROAD REG. NO.	STATE	CONTRACT NO.	SHEET NO.	TOTAL SHEETS
1	N.Y.	D259214	298	432

BRIDGE REHABILITATION PROJECT (ELEMENT SPECIFIC)

VARIOUS BRIDGES ON INTERSTATE 481

TOWNS OF DEWITT AND CICERO

ONONDAGA COUNTY

P.I.N. 305613 | B.I.N. 1093571

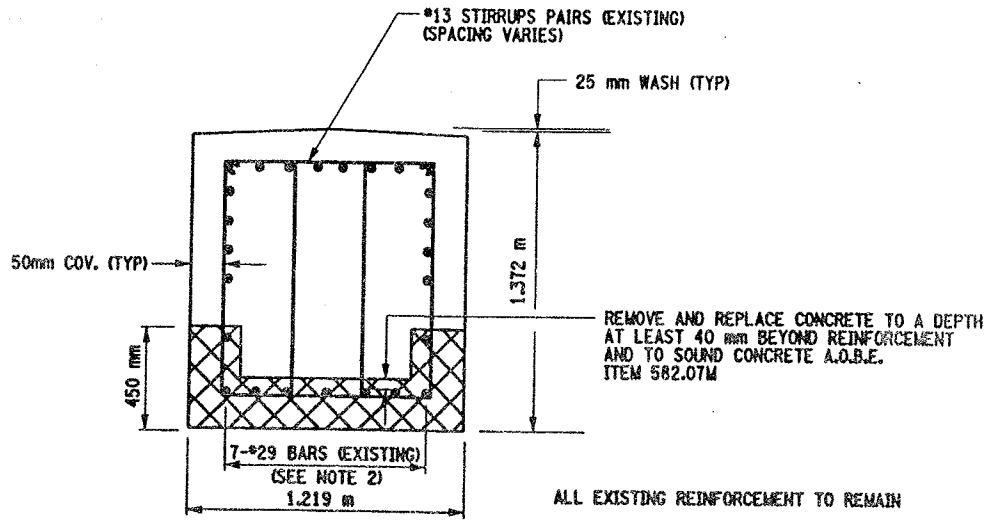

ALL EXISTING REINFORCEMENT TO REMAIN

SECTION A-A

NOT TO SCALE

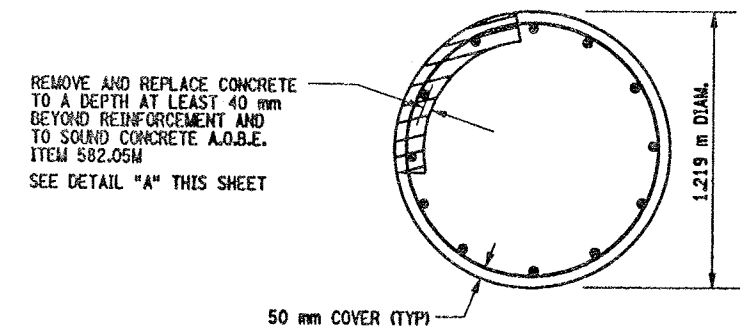

THE CONTRACTOR SHALL ONLY REMOVE AND REPLACE CONCRETE ON 1/4 OF THE CIRCUMFERENCE OF THE COLUMN SIMULTANEOUSLY, FOR THE FULL CURING PERIOD.

SECTION B-B

NOT TO SCALE

NOTES:

1. ALL CONCRETE REMOVAL OPERATIONS SHALL INCLUDE SAW CUTTING TO PRODUCE NEAT REMOVAL LINES. COST TO BE INCLUDED IN PRICE BID FOR THE APPROPRIATE REMOVAL ITEM.
2. THE REINFORCEMENT SHOWN IS TYPICAL FOR PIER #1. THE NUMBER AND OR SIZE OF REINFORCEMENT IN OTHER PIERS MAY VARY.
3. CONTRACTOR SHALL REMOVE DEBRIS FROM TOP OF PEDESTALS AND TOP OF CAP BEAM. COST TO BE INCLUDED IN THE PRICE BID FOR VARIOUS OTHER ITEMS OF CONTRACT.
4. CONTRACTOR SHALL REMOVE DEBRIS FROM TOP OF PEDESTALS AND TOP OF CAP BEAM. COST TO BE INCLUDED IN THE PRICE BID FOR VARIOUS OTHER ITEMS OF CONTRACT.

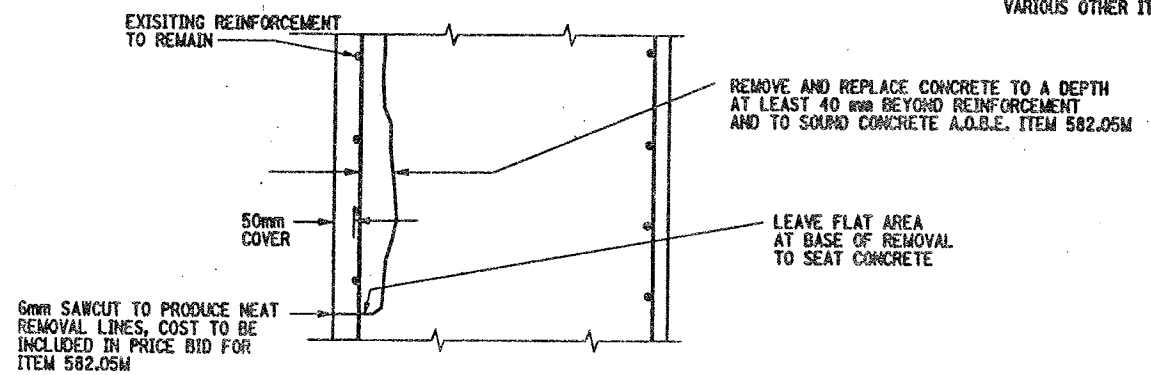

DETAIL "A"

NOT TO SCALE

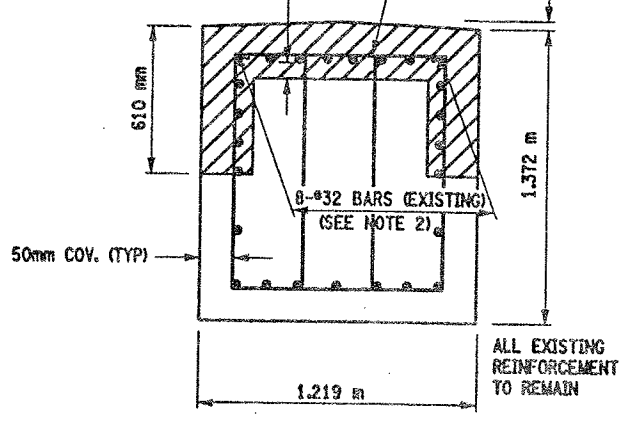

SECTION D-D

NOT TO SCALE

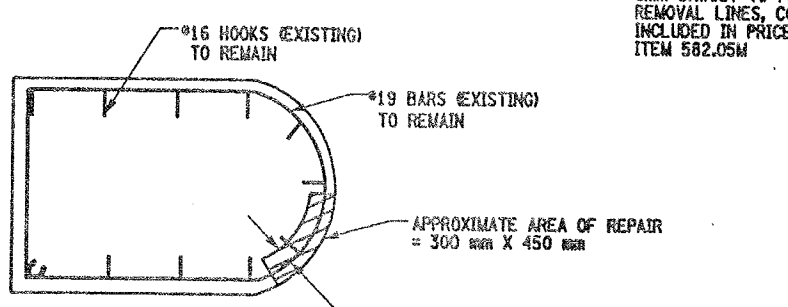

SECTION E-E

NOT TO SCALE

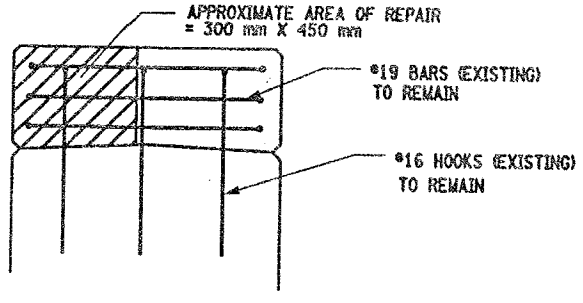

SECTION F-F

NOT TO SCALE

LEGEND:

ITEM 582.05M - REMOVAL OF STRUCTURAL CONCRETE- REPLACE WITH CLASS A CONCRETE. (CM)

ITEM 582.07M - REMOVAL OF STRUCTURAL CONCRETE - REPLACE WITH VERTICAL OVERHEAD PATCH MATERIAL. (SM)

LIST OF ITEMS USED:

ITEM 582.05M - REM. OF STRUC. CONC. - REPLACE WITH CLASS A CONCRETE (CM)
ITEM 582.07M - REM. OF STRUC. CONC. - REPL. W/ VERT. OVERHEAD PATCH MAT'L (SM)

ALL DIMENSIONS ARE IN mm UNLESS OTHERWISE NOTED

AS BUILT REVISIONS

SIGNATURE DATE

INTERSTATE 481 SB
OVER
CSX RAILROAD YARD
PIER 1

STATE OF NEW YORK
DEPARTMENT OF TRANSPORTATION

FILENAME	REGION	DATE	DRAWING NO.
305613AE.P1A	3	10/02	PR17-2S

ESTIMATED BY ____ DRAFTED BY ____ CHECKED BY ____ DESIGNED BY ____ JOB MANAGER ____ DESIGN SUPERVISOR ____

FED ROAD REG. NO.	STATE	CONTRACT NO.	SHEET NO.	TOTAL SHEETS
1	N.Y.	D259214	299	432

BRIDGE REHABILITATION PROJECT (ELEMENT SPECIFIC)
VARIOUS BRIDGES ON INTERSTATE 481
TOWNS OF DEWITT AND CICERO
ONONDAGA COUNTY
P.I.N. 305613 | B.I.N. 1093571

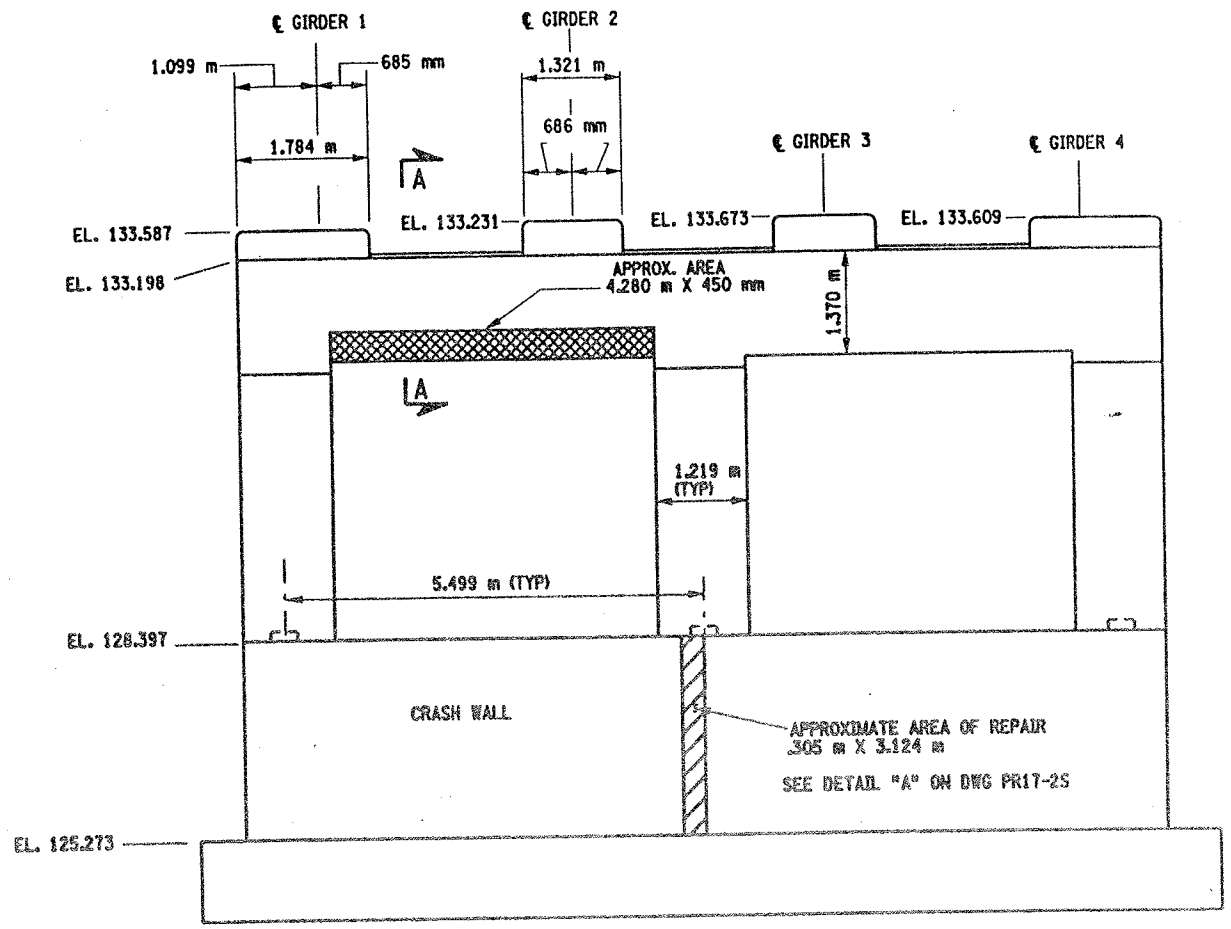

PIER 2 - FRONT FACE (LOOKING NORTH)
BIN 1093571
SCALE: 1 TO 50

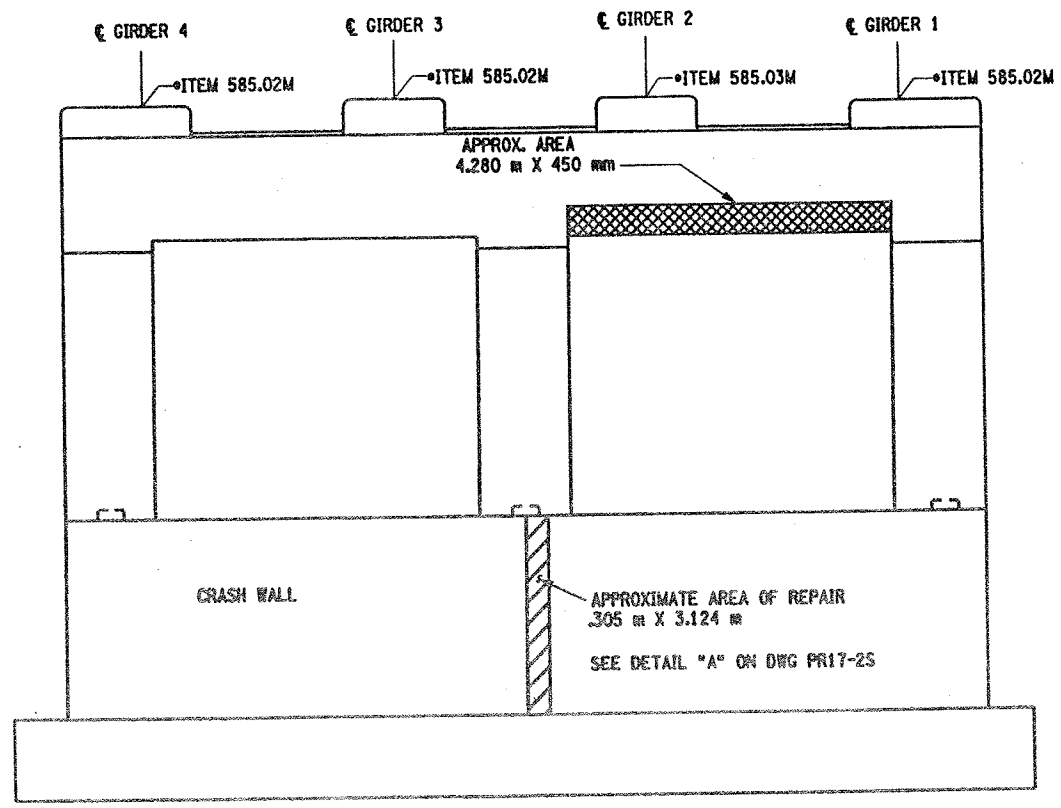

PIER 2- BACK FACE (LOOKING SOUTH)
BIN 1093571
SCALE: 1 TO 50

NOTES:

1. ALL REINFORCEMENT TO REMAIN.
2. RESTORE TO ORIGINAL DIMENSIONS.
3. PEDESTALS NUMERICALLY NUMBERED FROM WEST TO EAST.
4. FOR THE CONCRETE REPAIR AREAS, THE CONCRETE SHALL BE REMOVED TO AT LEAST 40mm MIN. BEYOND THE ENCOUNTERED REINFORCEMENT AND TO SOUND CONCRETE, A.O.B.E.
5. ELEVATIONS SHOWN ARE FROM ORIGINAL CONTRACT PLANS F.I.S.H. 70-7 AND ARE FOR REFERENCE ONLY.
6. REMOVAL DIMENSIONS SHOWN ON PLANS ARE ESTIMATED AND SHALL BE FIELD VERIFIED BY THE CONTRACTOR PRIOR TO BEGINNING OF REMOVAL OPERATIONS A.O.B.E.
7. PERFORM BEARING RESTORATION TO ALL EXPANSION BEARINGS (TO INCLUDE RESETTING OF UNDEREXTENDED OR OVEREXTENDED BEARINGS), SEE DWG. BR-10 & BR-11 FOR BEARING RESTORATION DETAILS. SEE DWG. PR17-1S FOR BEARING RESTORATION NOTES.
8. SEE DWG. PR17-2S FOR SECTION A-A AND DETAIL "A".
9. ALL CONCRETE REMOVAL SHALL BE SAWCUT TO PRODUCE NEAT REMOVAL LINES. COST TO BE INCLUDED IN THE PRICE BID FOR ITEM 582.05M AND ITEM 582.07M.
10. FOR JACKING NOTES SEE DWG. PR17-1S
11. CONTRACTOR WHALL REMOVE DEBRIS FROM TOP OF PEDESTALS AND TOP OF CAP BEAM. COST TO BE INCLUDED IN THE PRICE BE FOR VARIOUS OTHER ITEMS OF CONTRACT.

• PERFORM STRUCTURAL LIFTING UNDER ITEM 585.02M - STRUCTURAL LIFTING OPERATIONS - TYPE B (LIFTING AT A PIER) OR ITEM 585.03M - STRUCTURAL LIFTING OPERATIONS - TYPE C (LIFTING AT A PIER WHERE THE CONTRACTOR SHALL BE REQUIRED TO LIFT OFF THE FOOTING AND/OR GROUND LEVEL.

JACKING LOADS:

D.L. = 75 MT
L.L. = 50 MT
TOTAL = 125 MT

LEGEND:

ITEM 582.05M - REMOVAL OF STRUCTURAL CONCRETE- REPLACE WITH CLASS A CONCRETE (CU)

ITEM 582.07M - REMOVAL OF STRUCTURAL CONCRETE - REPLACE WITH VERTICAL OVER-HEAD PATCH MATERIAL. (SM)

LIST OF ITEMS USED

ITEM 15565.4302M - BRIDGE BEARING RESTORATION (EA)
ITEM 582.05M - REM. OF STRUC. CONC. - REPLACE WITH CLASS A CONCRETE (CU)
ITEM 582.07M - REM. OF STRUC. CONC. - REPL. W/ VERT. OVERHEAD PATCH MAT'L (SM)
ITEM 585.02M - STRUCTURAL LIFTING OPERATIONS - TYPE B (EA)
ITEM 585.03M - STRUCTURAL LIFTING OPERATION - TYPE C (EA)

ALL DIMENSIONS ARE IN mm UNLESS OTHERWISE NOTED

AS BUILT REVISIONS

SIGNATURE DATE

INTERSTATE 481 SB
OVER
CSX RAILROAD YARD
PIER 2

STATE OF NEW YORK
DEPARTMENT OF TRANSPORTATION

FILENAME	REGION	DATE	DRAWING NO.
305613AE_P2A	3	10/02	PR17-3S

DESIGN SUPERVISOR ____ JOB MANAGER ____ DESIGNED BY ____ DRAFTED BY ____ ESTIMATED BY ____ CHECKED BY ____ CHECKED BY ____

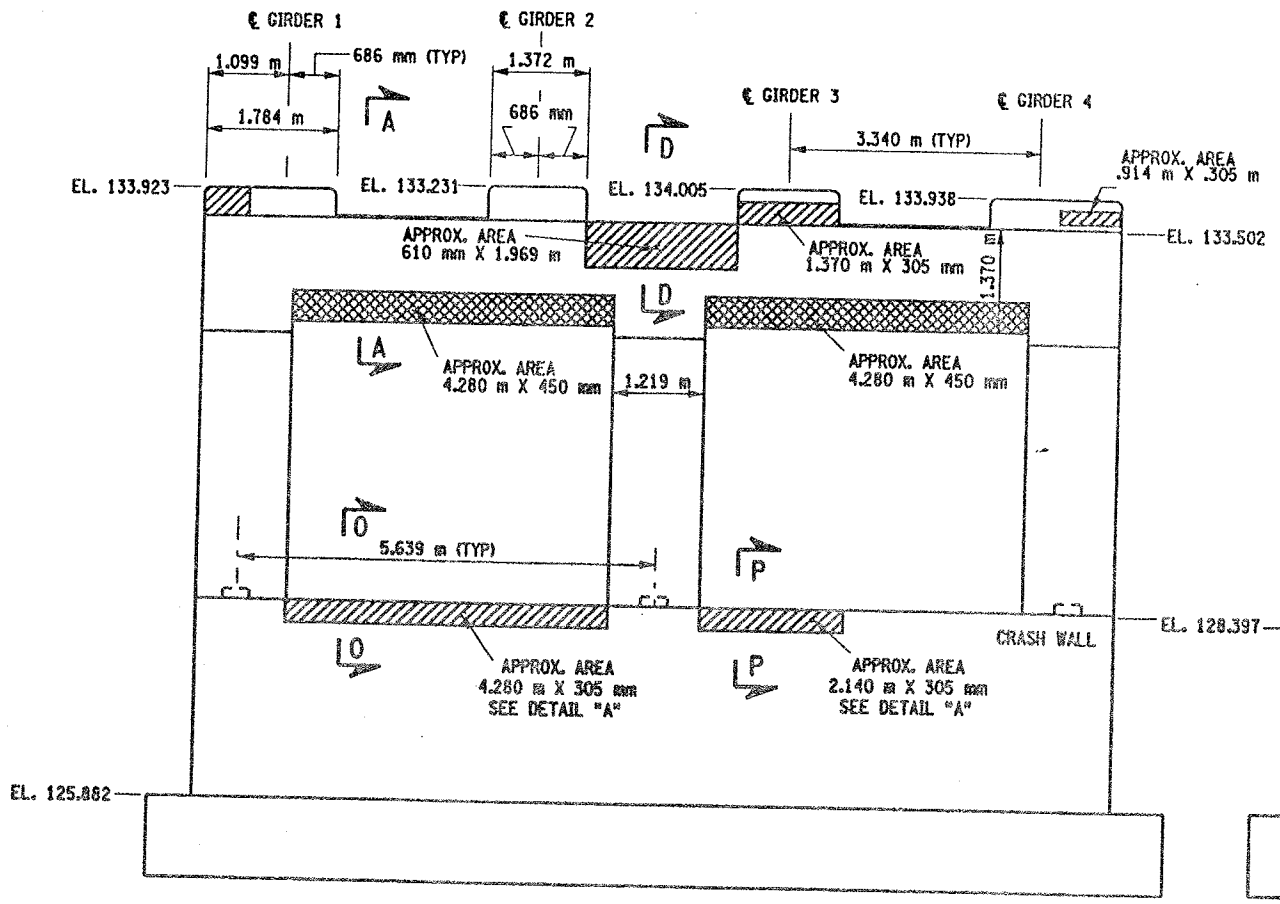

PIER 3 - FRONT FACE (LOOKING NORTH)

BIN 1093571

SCALE: 1 TO 50

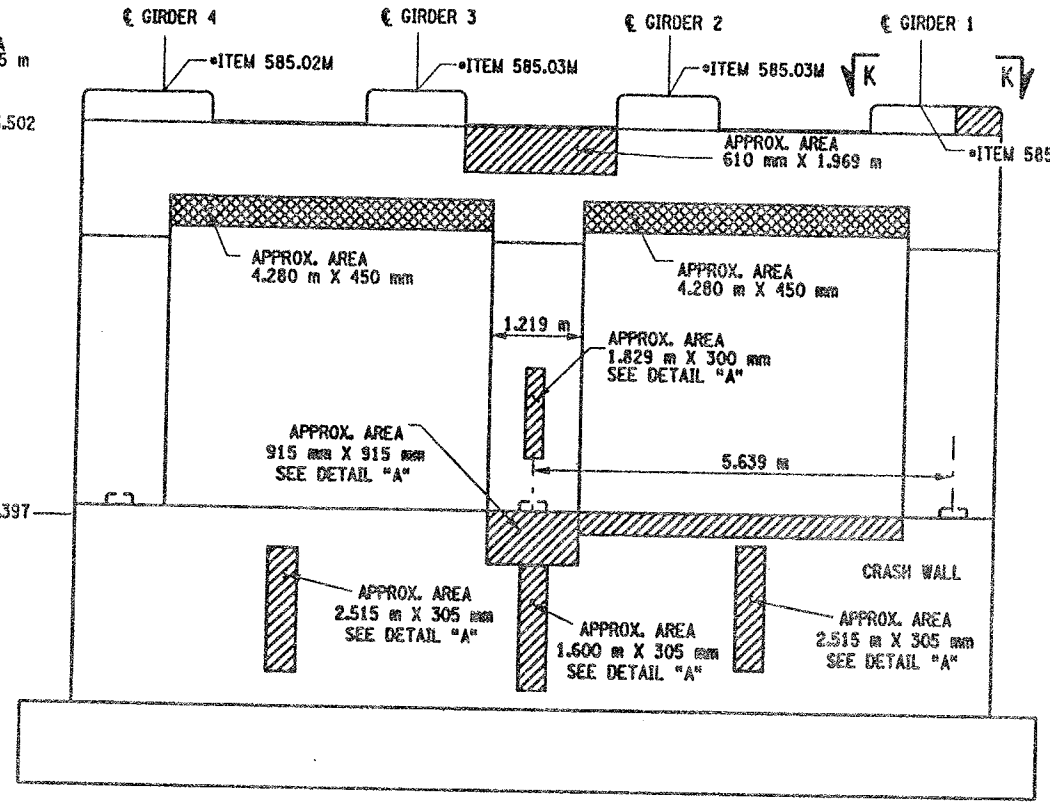

PIER 3 - BACK FACE (LOOKING SOUTH)

BIN 1093571

SCALE: 1 TO 50

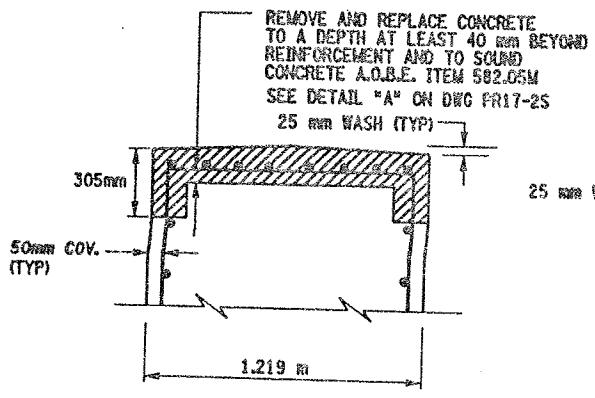

ALL EXISTING REINFORCEMENT TO REMAIN

SECTION O-O

NOT TO SCALE

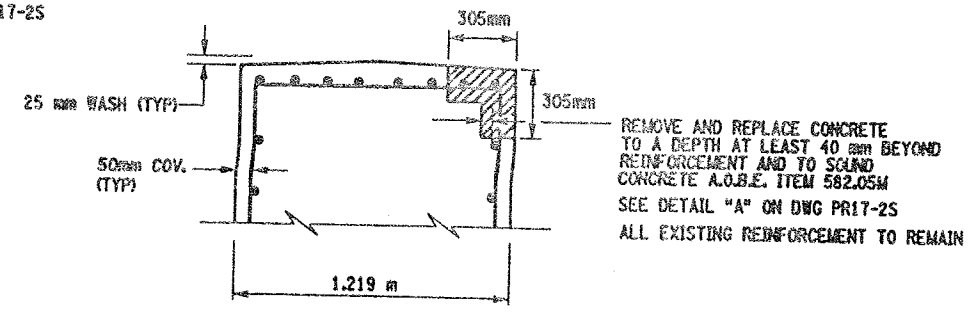

SECTION P-P

NOT TO SCALE

LIST OF ITEMS USED:

ITEM 15565.4302M - BRIDGE BEARING RESTORATION (EA)
ITEM 582.05M - REM. OF STRUC. CONC. - REPLACE WITH CLASS A CONCRETE (CM)
ITEM 582.07M - REM. OF STRUC. CONC. - REPL. W/ VERT. OVERHEAD PATCH MATL. (SM)
ITEM 585.02M - STRUCTURAL LIFTING OPERATIONS - TYPE B (EA)
ITEM 585.03M - STRUCTURAL LIFTING OPERATION - TYPE C (EA)

• PERFORM STRUCTURAL LIFTING UNDER ITEM 585.02M - STRUCTURAL LIFTING OPERATIONS - TYPE B (LIFTING AT A PIER) OR ITEM 585.03M - STRUCTURAL LIFTING OPERATIONS - TYPE C (LIFTING AT A PIER WHERE THE CONTRACTOR SHALL BE REQUIRED TO LIFT OFF THE FOOTING AND/OR GROUND LEVEL.

JACKING LOADS:

D.L. = 100 MT
L.L. = 50 MT
TOTAL = 150 MT

FED ROAD REG. NO.	STATE	CONTRACT NO.	SHEET NO.	TOTAL SHEETS
1	N.Y.	D259214	300	432

BRIDGE REHABILITATION PROJECT (ELEMENT SPECIFIC)
VARIOUS BRIDGES ON INTERSTATE 481
TOWNS OF DEWITT AND CICERO
ONONDAGA COUNTY
P.I.N. 305613 | B.I.N. 1093571

NOTES:

1. ALL REINFORCEMENT TO REMAIN.
2. RESTORE TO ORIGINAL DIMENSIONS.
3. PEDESTALS NUMERICALLY NUMBERED FROM WEST TO EAST.
4. FOR THE CONCRETE REPAIR AREAS, THE CONCRETE SHALL BE REMOVED TO AT LEAST 40mm MIN. BEYOND THE ENCOUNTERED REINFORCEMENT AND TO SOUND CONCRETE, A.O.B.E.
5. ELEVATIONS SHOWN ARE FROM ORIGINAL CONTRACT PLANS F.I.S.H. 70-7 AND ARE FOR REFERENCE ONLY.
6. REMOVAL DIMENSIONS SHOWN ON PLANS ARE ESTIMATED AND SHALL BE FIELD VERIFIED BY THE CONTRACTOR PRIOR TO BEGINNING OF REMOVAL OPERATIONS A.O.B.E.
7. PERFORM BEARING RESTORATION TO ALL EXPANSION BEARINGS (TO INCLUDE RESETTING OF UNDEREXTENDED OR OVEREXTENDED BEARINGS). SEE DWG BR-10 & BR-11 FOR BEARING RESTORATION DETAILS. SEE DWG. PR17-1S FOR BEARING RESTORATION NOTES.
8. SEE DWG. PR17-2S FOR SECTIONS A-A, D-D AND DETAIL "A".
9. SEE DWG. PR17-2N FOR SECTION K-K.
10. ALL CONCRETE REMOVAL SHALL BE SAWCUT TO PRODUCE NEAT REMOVAL LINES. COST TO BE INCLUDED IN THE PRICE BID FOR ITEM 582.05M AND ITEM 582.07M.
11. FOR JACKING NOTES SEE DWG. PR17-1S.
12. CONTRACTOR SHALL REMOVE DEBRIS FROM TOP OF PEDISTALS AND TOP OF CAPBEAM. COST TO BE INCLUDED IN THE PRICE BID FOR VARIOUS OTHER ITEMS OF CONTRACT.

LEGEND:

ITEM 582.05M - REMOVAL OF STRUCTURAL CONCRETE- REPLACE WITH CLASS A CONCRETE (CM)

ITEM 582.07M - REMOVAL OF STRUCTURAL CONCRETE - REPLACE WITH VERTICAL OVERHEAD PATCH MATERIAL. (SM)

ALL DIMENSIONS ARE IN mm UNLESS OTHERWISE NOTED

AS BUILT REVISIONS

SIGNATURE DATE

INTERSTATE 481 SB
OVER
CSX RAIROAD YARD
PIER 3

STATE OF NEW YORK
DEPARTMENT OF TRANSPORTATION

FILENAME	REGION	DATE	DRAWING NO.
305613AE.P3A	3	10/02	PR17-4S

DESIGN SUPERVISOR ____ JOB MANAGER ____ DESIGNED BY ____ DRAFTED BY ____ ESTIMATED BY ____ CHECKED BY ____

FED ROAD REG. NO.	STATE	CONTRACT NO.	SHEET NO.	TOTAL SHEETS
1	N.Y.	D259214	301	432

BRIDGE REHABILITATION PROJECT (ELEMENT SPECIFIC)
VARIOUS BRIDGES ON INTERSTATE 481
TOWNS OF DEWITT AND CICERO
ONONDAGA COUNTY
P.I.N. 305613 B.I.N. 1093571

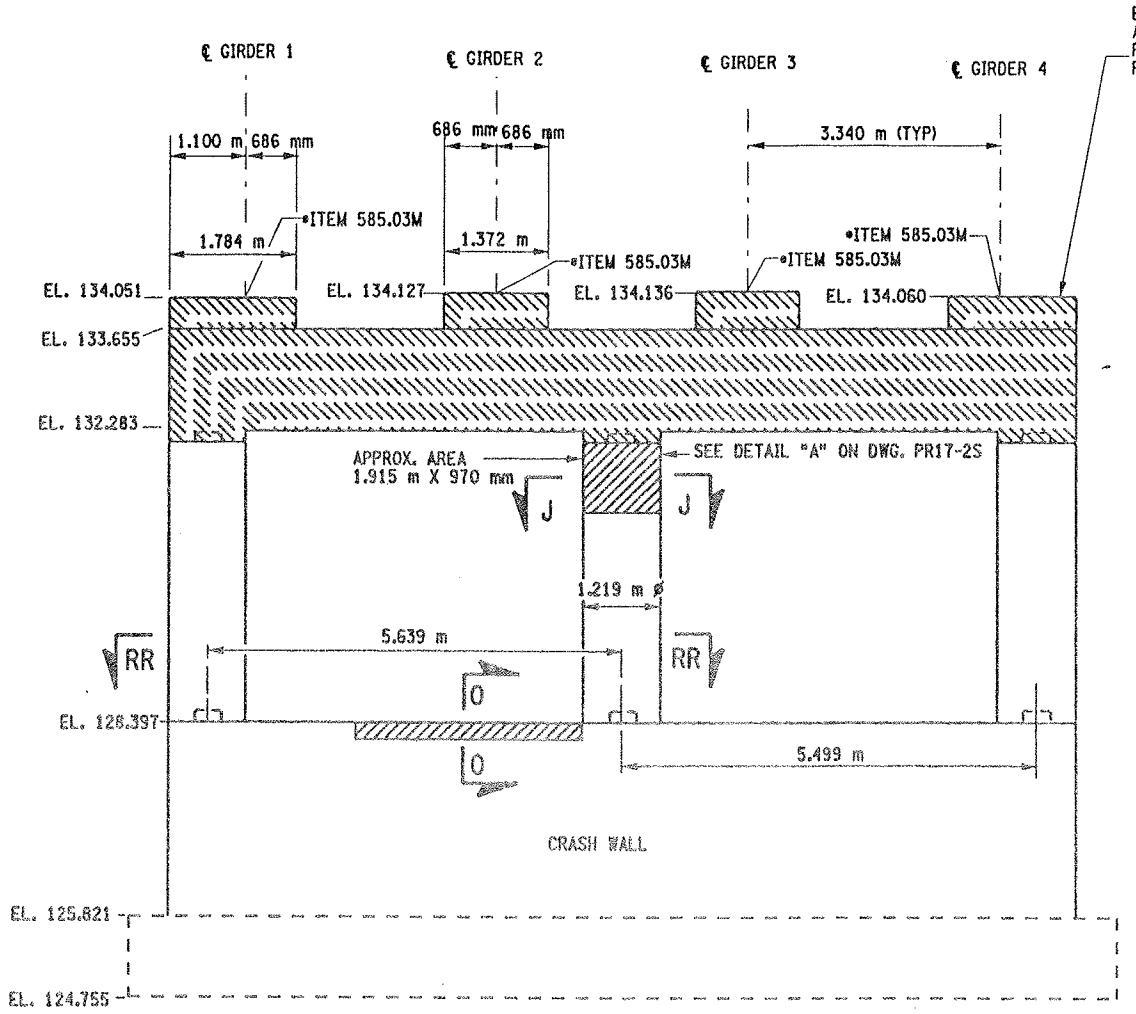

PIER 4 - FRONT FACE (LOOKING NORTH)
BIN 1093571 REMOVAL
SCALE: 1 TO 50

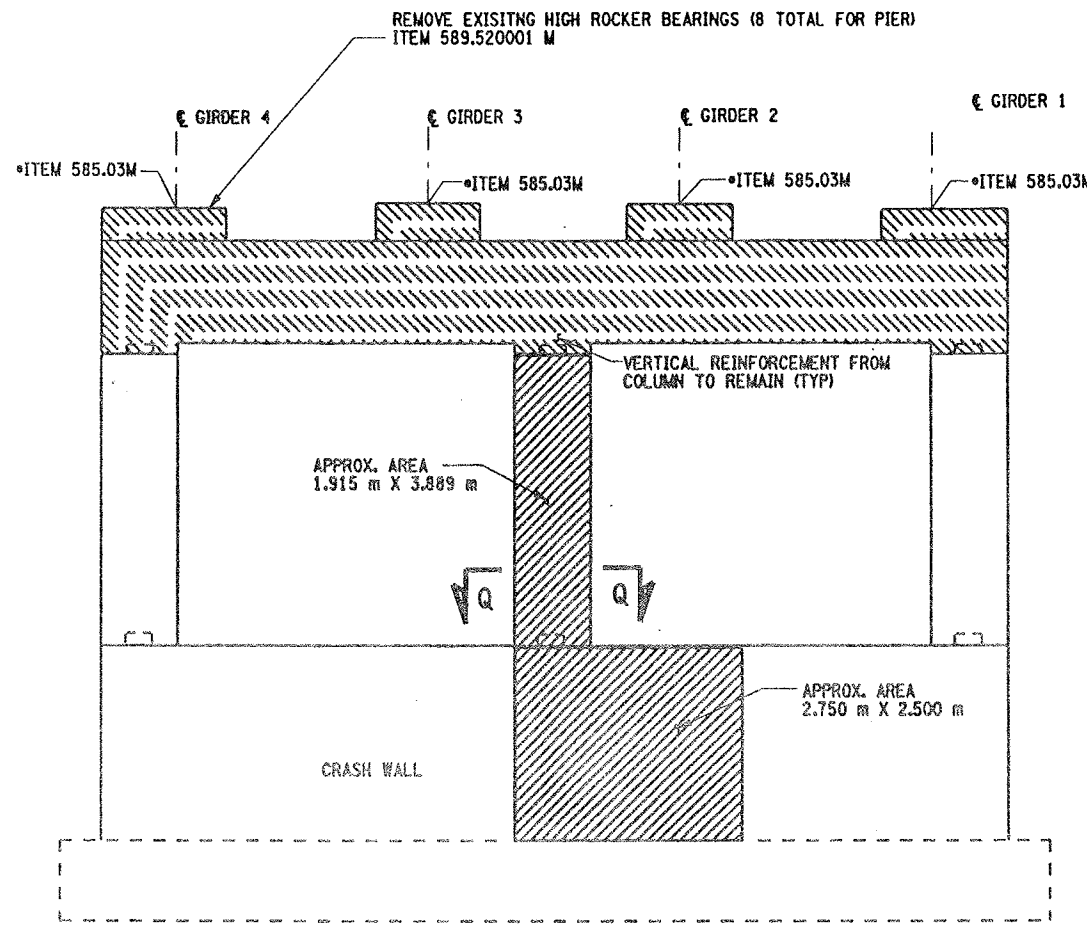

PIER 4 - BACKFACE (LOOKING SOUTH)
BIN 1093571 REMOVAL
SCALE: 1 TO 50

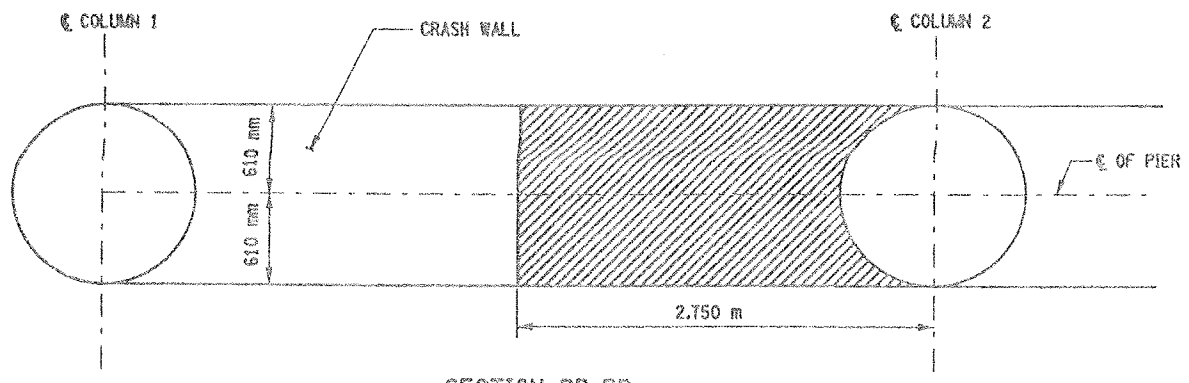

SECTION RR-RR
SCALE 1:25

• PERFORM STRUCTURAL LIFTING UNDER ITEM 585.02M - STRUCTURAL LIFTING OPERATIONS - TYPE B (LIFTING AT A PIER) OR ITEM 585.03M - STRUCTURAL LIFTING OPERATIONS - TYPE C (LIFTING AT A PIER WHERE THE CONTRACTOR SHALL BE REQUIRED TO LIFT OFF THE FOOTING AND/OR GROUND LEVEL.

JACKING LOADS:

D.L. = 100 MT
L.L. = 50 MT
TOTAL = 150 MT

LIST OF ITEMS USED:

ITEM 580.01M	- REMOVAL OF STRUCTURAL CONCRETE (CM)
ITEM 582.05M	- REM. OF STRUC. CONC. - REPLACE WITH CLASS A CONCRETE (CM)
ITEM 585.03M	- STRUCTURAL LIFTING OPERATION - TYPE C (EA)
ITEM 589.520001M	- REMOVAL OF EXISTING STEEL (EA)

NOTES:

1. ALL REINFORCEMENT TO REMAIN, (EXCEPT PEDESTAL REINFORCEMENT AND CAPBEAM REINFORCEMENT). THE VERTICAL REINFORCEMENT IN THE CAPBEAMS-ORIGINATING FROM THE COLUMNS SHALL REMAIN.
2. PEDESTALS NUMERICALLY NUMBERED FROM WEST TO EAST.
3. FOR THE CONCRETE REPAIR AREAS, THE CONCRETE SHALL BE REMOVED TO AT LEAST 40mm MIN. BEYOND THE ENCOUNTERED REINFORCEMENT AND TO SOUND CONCRETE, A.O.B.E.
4. ELEVATIONS SHOWN ARE FROM ORIGINAL CONTRACT PLANS F.I.S.H. 70-7 AND ARE FOR REFERENCE ONLY.
5. REMOVAL DIMENSIONS SHOWN ON PLANS ARE ESTIMATED AND SHALL BE FIELD VERIFIED BY THE CONTRACTOR AND ENGINEER PRIOR TO BEGINNING OF REMOVAL OPERATIONS A.O.B.E.
6. SEE DWG. PR17-4N FOR SECTION Q-Q.
7. SEE DWG. PR17-2N FOR SECTION J-J.
8. SEE DWG. PR17-4S FOR SECTION O-O.
9. ALL CONCRETE REMOVAL SHALL BE SAWCUT TO PRODUCE NEAT REMOVAL LINES. COST TO BE INCLUDED IN THE PRICE BID FOR ITEM 582.05M AND ITEM 582.07M.
10. FOR JACKING NOTES SEE DWG. PR17-1S
11. CONTRACTOR SHALL REMOVE DEBRIS FROM TOP OF PEDESTALS AND TOP OF CAP BEAM. COST TO BE INCLUDED IN THE PRICE BID FOR VARIOUS OTHER ITEMS OF CONTRACT.
12. SEE BR-1 AND BR-2 FOR BEARING TABLE AND BEARING DETAILS.

LEGEND:

REPAIR: ITEM 582.05M - REMOVAL OF STRUCTURAL CONCRETE- REPLACE WITH CLASS A CONCRETE (CM)

REPLACEMENT: ITEM 580.01M - REMOVAL OF STRUCTURAL CONCRETE - (CM) (COMPLETE REMOVAL)

ALL DIMENSIONS ARE IN mm UNLESS OTHERWISE NOTED

AS BUILT REVISIONS

SIGNATURE DATE

INTERSTATE 481 SB
OVER
CSX RAILROAD YARD
PIER 4
REMOVAL DETAILS

STATE OF NEW YORK
DEPARTMENT OF TRANSPORTATION

FILENAME	REGION	DATE	DRAWING NO.
305613AE.P4A	3	10/02	PR17-5S

CHECKED BY
DRAFTED BY
ESTIMATED BY
CHECKED BY
DESIGNED BY
JOB MANAGER
DESIGN SUPERVISOR

FED ROAD REG. NO.	STATE	CONTRACT NO.	SHEET NO.	TOTAL SHEETS
1	N.Y.	D259214	302	432

BRIDGE REHABILITATION PROJECT (ELEMENT SPECIFIC)
VARIOUS BRIDGES ON INTERSTATE 481
TOWNS OF DEWITT AND CICERO
COUNTY OF ONONDAGA
P.I.N. 305613 | B.I.N. 1093571

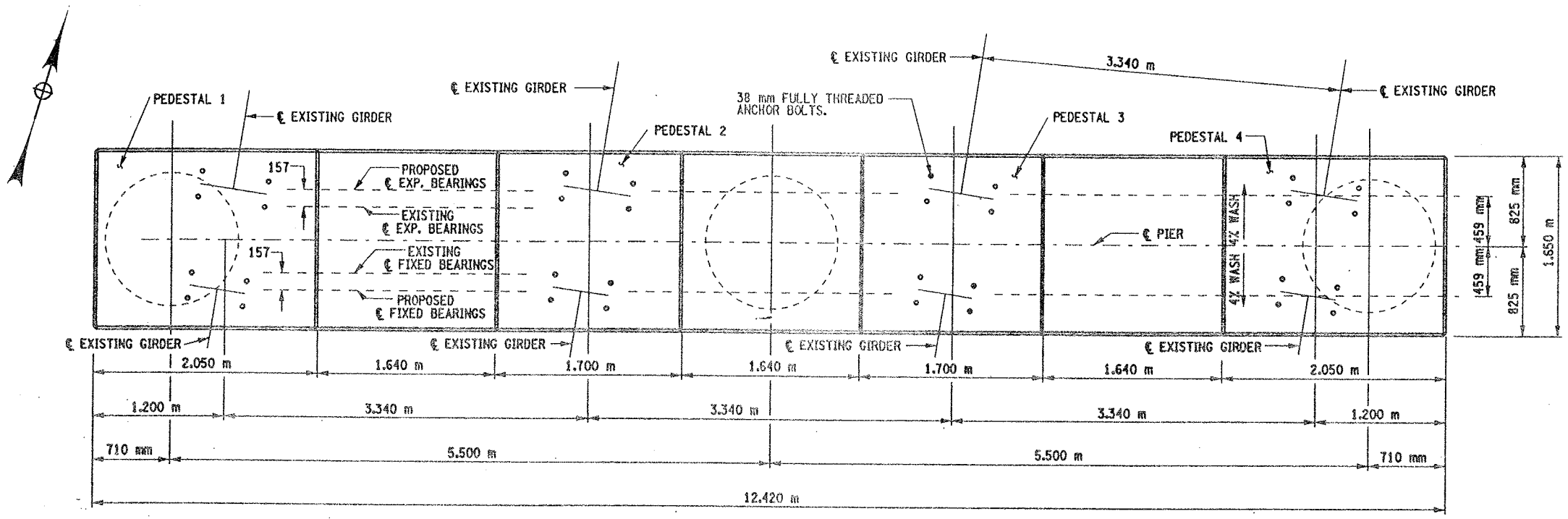

PROPOSED PLAN
SCALE 1:25

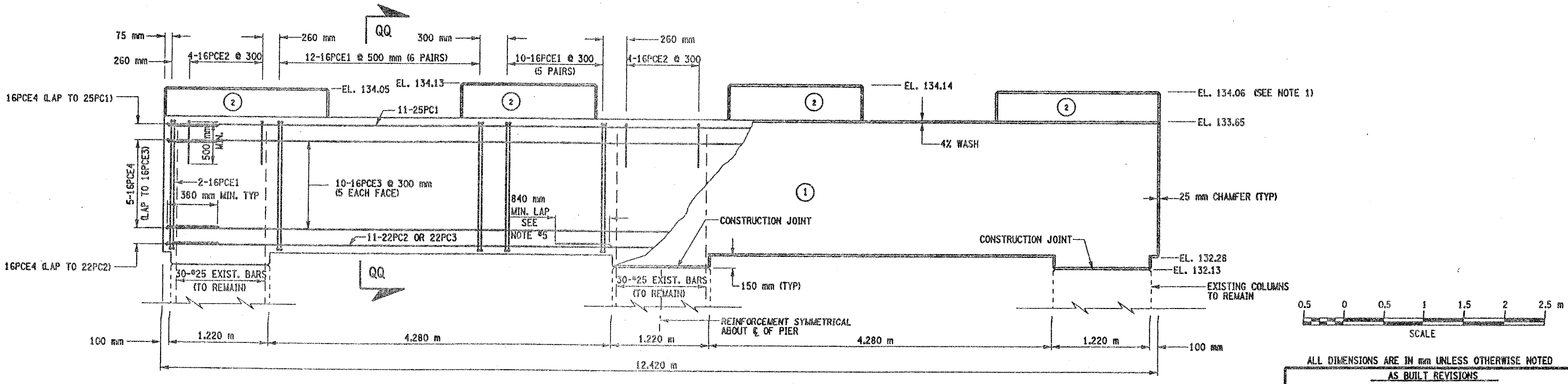

(NO.) INDICATES CONCRETE PLACEMENT NUMBER

PROPOSED ELEVATION
SCALE 1:25

CONCRETE TABLE (m^3)		
PLACEMENT	QUANTITY	ITEM NO.
1	5.46	555.09M
2	28.60	555.09M

LIST OF ITEMS USED:

ITEM 555.09M - CONCRETE FOR STRUCTURES, CLASS HP (CM)
ITEM 556.0201M - UNCOATED BAR REINFORCEMENT FOR CONCRETE STRUC. (KG)
ITEM 556.0202M - EPOXY-COATED BAR REINFORCEMENT FOR STRUC. (KG)

NOTES:

1. THESE ELEVATIONS MAY HAVE TO BE ADJUSTED TO ACCOMMODATE THE ACTUAL BEARINGS FURNISHED. IT IS THE RESPONSIBILITY OF THE CONTRACTOR TO COORDINATE ANY CHANGES IN THE BEARINGS WHICH MAY AFFECT THE PEDESTAL ELEVATIONS OR DIMENSIONS.
2. SEE DWG PR17-7S FOR ANCHOR BOLT LAYOUT, PEDESTAL REINFORCEMENT DETAILS, SECTION QQ-QQ, AND CHAMFER DETAIL.
3. SEE DWG. NO. BL-6 FOR BAR LIST AND BAR BENDING DIAGRAMS.
4. SEE BR-1 AND BR-2 FOR BEARING DETAILS.
5. REINF. BAR LAPS, IF REQUIRED SHALL BE STAGGERED SO NO MORE THAN 50% OF THE BARS ARE LAPPED AT ANY ONE LOCATION.

0.5 0 0.5 1 1.5 2 2.5 m
SCALE

ALL DIMENSIONS ARE IN mm UNLESS OTHERWISE NOTED

AS BUILT REVISIONS

SIGNATURE DATE

INTERSTATE 481 SB
OVER
CSX RAILROAD YARD
PIER 4

STATE OF NEW YORK
DEPARTMENT OF TRANSPORTATION

FILENAME	REGION	DATE	DRAWING NO.
305613AE.P4A	3	10/02	PR17-6S

ESTIMATED BY ____ DRAFTED BY ____ CHECKED BY ____
DESIGN SUPERVISOR ____ JOB MANAGER ____ DESIGNED BY ____ CHECKED BY ____

FED ROAD REG. NO.	STATE	CONTRACT NO.	SHEET NO.	TOTAL SHEETS
1	N.Y.	D259214	303	432

BRIDGE REHABILITATION PROJECT (ELEMENT SPECIFIC)
VARIOUS BRIDGES ON INTERSTATE 481
TOWNS OF DEWITT AND CICERO
COUNTY OF ONONDAGA
P.I.N. 305613 B.I.N. 1093571

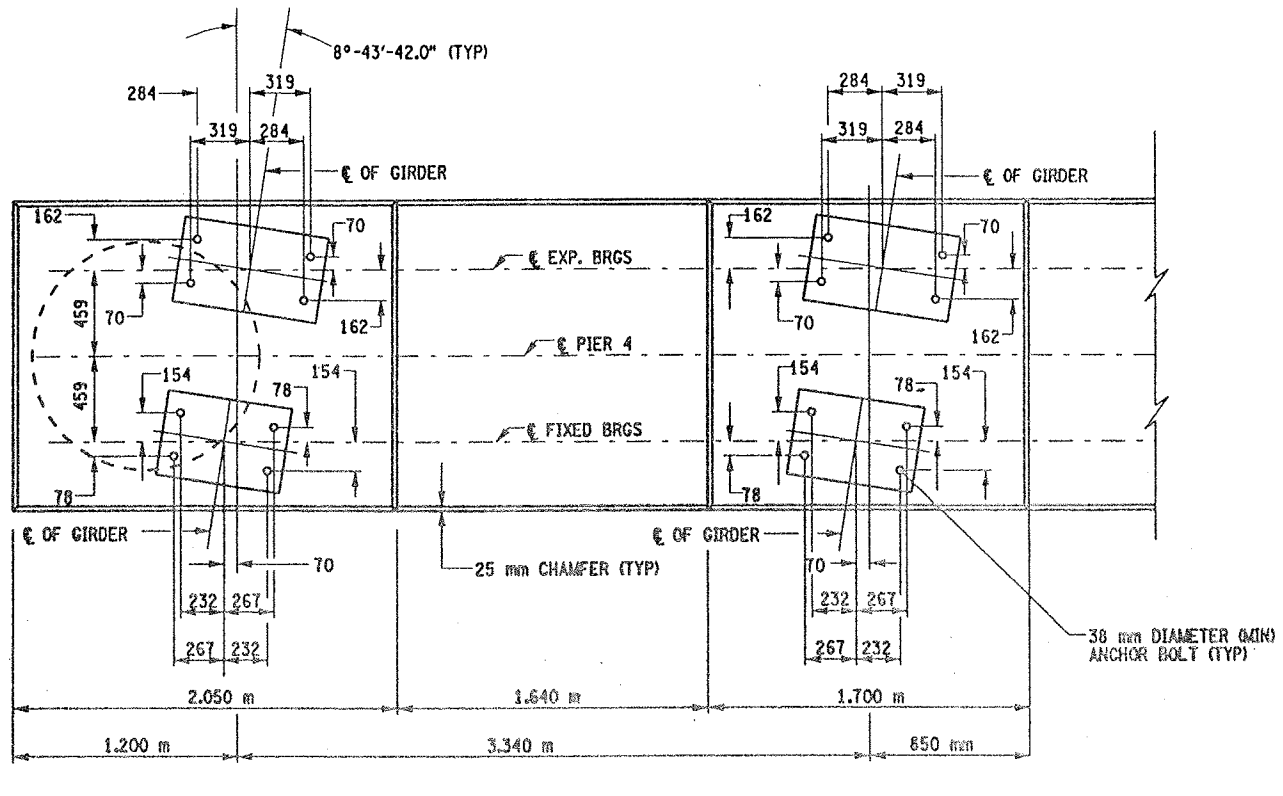

ANCHOR BOLT LAYOUT

SCALE 1:20

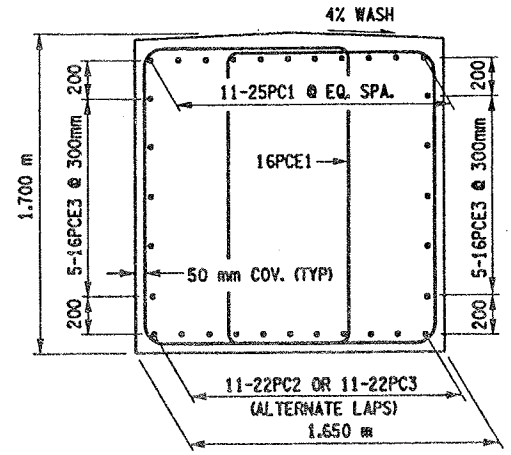

SECTION QQ-QQ

SCALE 1 TO 20

NOTES:

1. SEE DWG. NO. BL-6 FOR BAR LIST AND BAR BENDING DIAGRAM.
2. CONTRACTOR SHALL REMOVE DEBRIS FROM TOP OF PEDESTALS AND TOP OF CAP BEAM. COST TO BE INCLUDED IN THE PRICE BID FOR VARIOUS OTHER ITEMS OF CONTRACT.
3. SEE BR-1 AND BR-2 FOR BEARING DETAILS.
4. SAME BAR MARKS SHALL APPLY FOR BOTH PIERS.

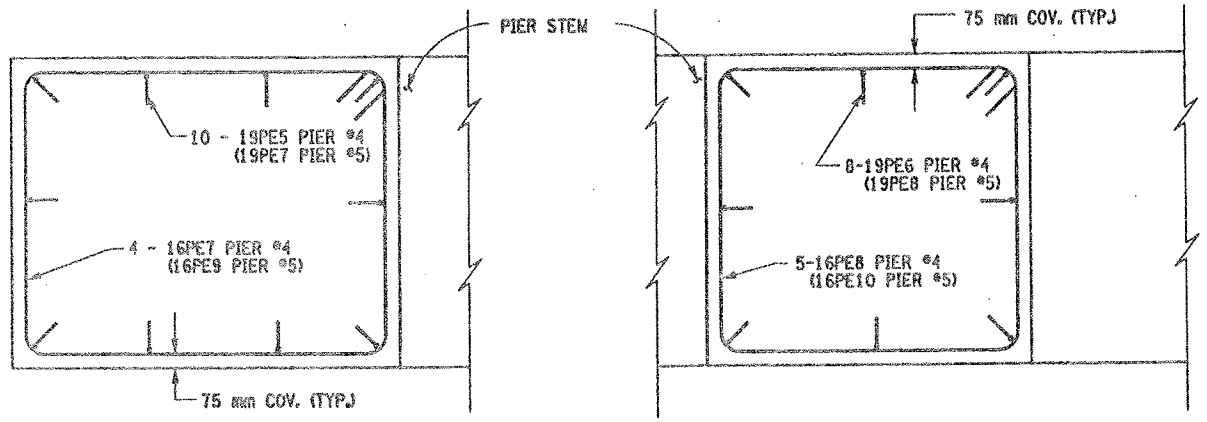

PEDESTALS 1 & 4 PEDESTALS 2 & 3

PEDESTAL REINFORCEMENT (PLAN)

SCALE 1:20

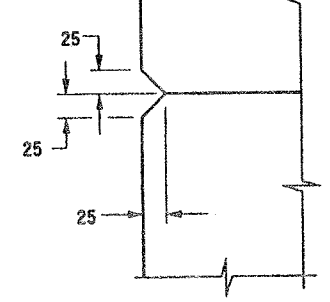

CHAMFER DETAIL

NOT TO SCALE

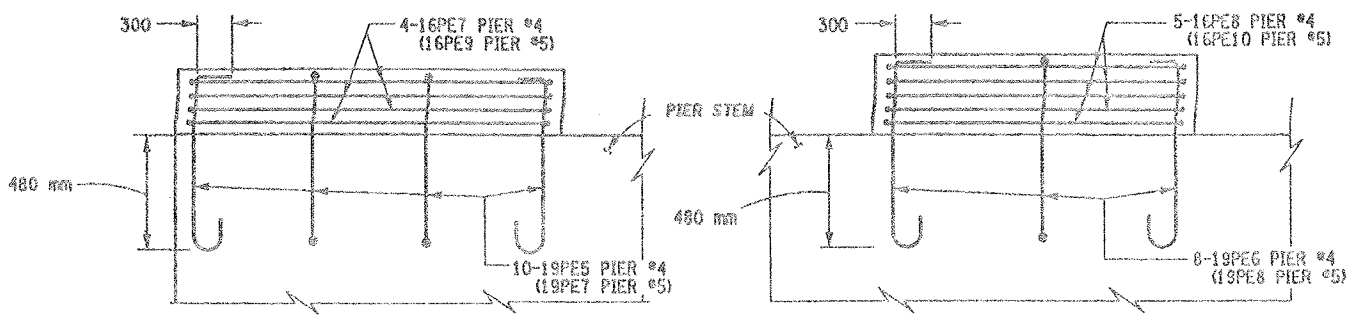

PEDESTALS 1 (PEDESTAL 4 SIMILAR) PEDESTALS 2 & 3

PEDESTAL REINFORCEMENT (ELEVATION)

SCALE 1:20

LIST OF ITEMS USED:

ITEM 555.09M - CONCRETE FOR STRUCTURES, CLASS HP (CM)
ITEM 555.0201M - UNCOATED BAR REINFORCEMENT FOR CONCRETE STRUC. (KG)
ITEM 555.0202M - EPOXY-COATED BAR REINFORCEMENT FOR STRUC. (KG)
ITEM 580.01M - REMOVAL OF STRUCTURAL CONCRETE (CM)

0.5 0 0.5 1 1.5 2 m
SCALE

ALL DIMENSIONS ARE IN mm UNLESS OTHERWISE NOTED

AS BUILT REVISIONS

SIGNATURE DATE

INTERSTATE 481 SB
OVER
CSX RAILROAD YARD
PIERS 4 & 5

STATE OF NEW YORK
DEPARTMENT OF TRANSPORTATION

FILENAME	REGION	DATE	DRAWING NO.
305613AE.P4A	3	10/02	PR17-7S

DESIGN SUPERVISOR ____ JOB MANAGER ____ DESIGNED BY ____ CHECKED BY ____
ESTIMATED BY ____ DRAFTED BY ____ CHECKED BY ____

FED ROAD REG. NO.	STATE	CONTRACT NO.	SHEET NO.	TOTAL SHEETS
1	N.Y.	D259214	304	432

BRIDGE REHABILITATION PROJECT (ELEMENT SPECIFIC)

VARIOUS BRIDGES ON INTERSTATE 481

TOWNS OF DEWITT AND CICERO

ONONDAGA COUNTY

P.I.N. 305613 | B.I.N. 1093571

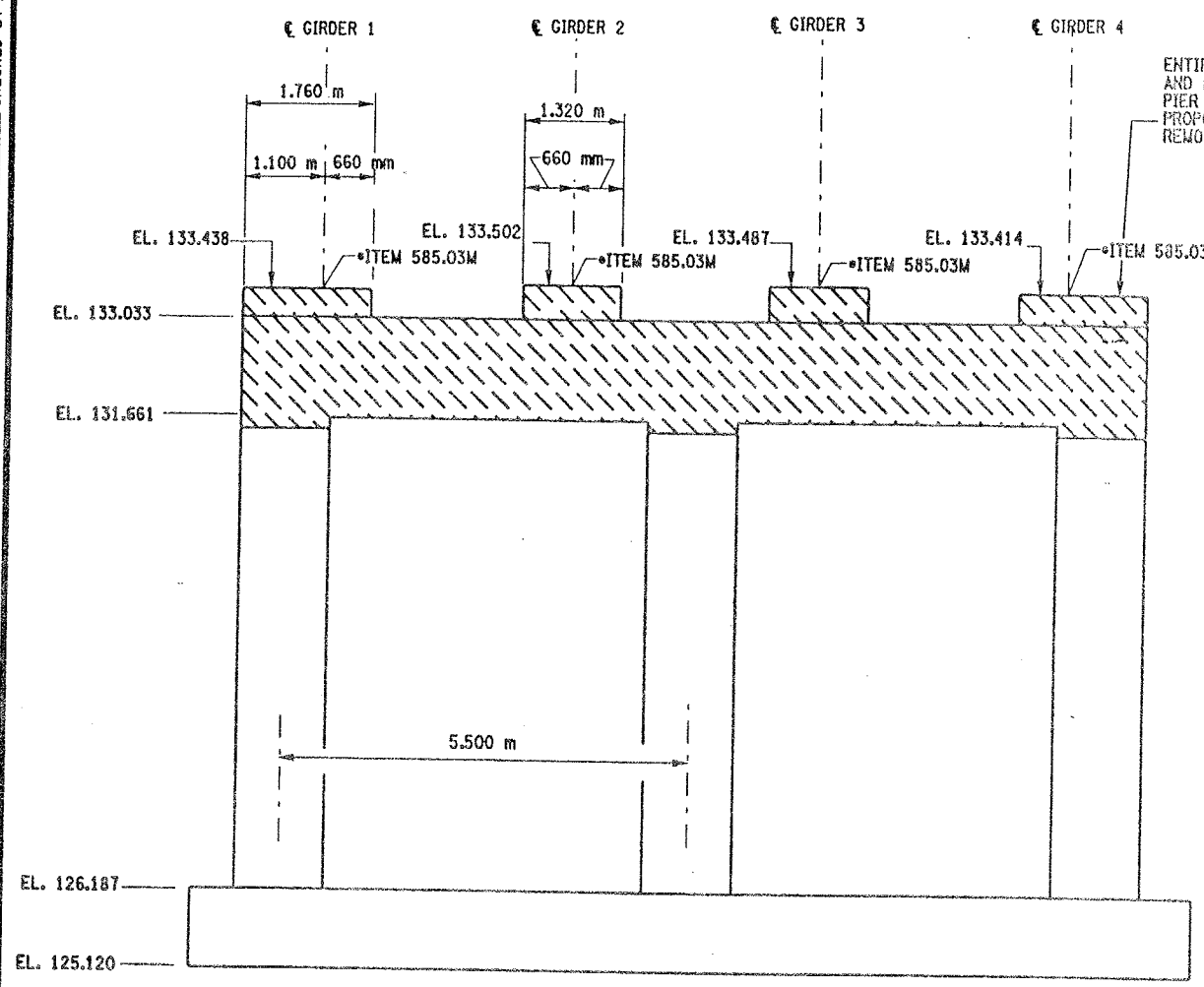

PIER 5 - FRONT FACE (LOOKING NORTH)
BIN 1093571 (REMOVAL)
SCALE: 1 TO 50

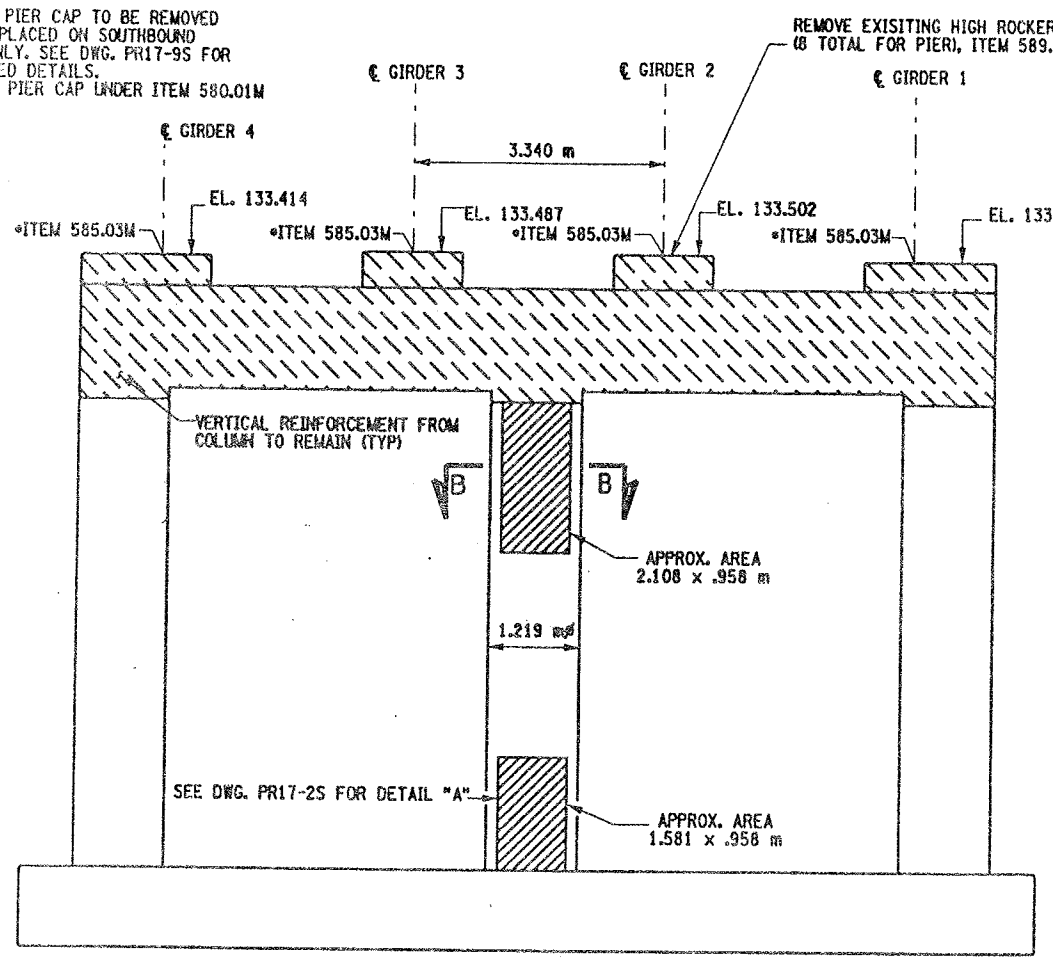

PIER 5 - BACK FACE (LOOKING SOUTH)
BIN 1093571 (REMOVAL)
SCALE: 1 TO 50

NOTES:

1. ALL REINFORCEMENT TO REMAIN, (EXCEPT PEDESTAL REINFORCEMENT AND CAPBEAM REINFORCEMENT), THE VERTICAL REINFORCEMENT IN THE CAPBEAMS ORIGINATING FROM THE COLUMNS SHALL REMAIN.
2. PEDESTALS NUMERICALLY NUMBERED FROM WEST TO EAST.
3. FOR THE CONCRETE REPAIR AREAS, THE CONCRETE SHALL BE REMOVED TO AT LEAST 40mm MIN. BEYOND THE ENCOUNTERED REINFORCEMENT AND TO SOUND CONCRETE, A.O.B.E.
4. ELEVATIONS SHOWN ARE FROM ORIGINAL CONTRACT PLANS F.I.S.H. 70-7 AND ARE FOR REFERENCE ONLY.
5. REMOVAL DIMENSIONS SHOWN ON PLANS ARE ESTIMATED AND SHALL BE FIELD VERIFIED BY THE CONTRACTOR AND ENGINEER PRIOR TO BEGINNING OF REMOVAL OPERATIONS A.O.B.E.
6. SEE DWG. PR17-2S FOR SECTION B-B AND DETAIL "A".
7. ALL CONCRETE REMOVAL SHALL BE SAWCUT TO PRODUCE NEAT REMOVAL LINES. COST TO BE INCLUDED IN THE PRICE BID FOR ITEM 582.05M AND ITEM 582.07M
8. FOR JACKING LOADS SEE DWG. PR17-1S
9. SEE BR-1 AND BR-2 FOR BEARING TABLE AND BEARING DETAIL

* PERFORM STRUCTURAL LIFTING UNDER ITEM 585.02M - STRUCTURAL LIFTING OPERATIONS - TYPE B LIFTING AT A PIER) OR ITEM 585.03M - STRUCTURAL LIFTING OPERATIONS - TYPE C LIFTING AT A PIER WHERE THE CONTRACTOR SHALL BE REQUIRED TO LIFT OFF THE FOOTING AND/OR GROUND LEVEL.

JACKING LOADS:

D.L. = 100 MT
L.L. = 50 MT
TOTAL = 150 MT

LEGEND:

REPAIR: ITEM 582.05M - REMOVAL OF STRUCTURAL CONCRETE- REPLACE WITH CLASS A CONCRETE (CM)

REPLACEMENT: *ITEM 580.01M - REMOVAL OF STRUCTURAL* CONCRETE - (CM) (COMPLETE REMOVAL)

LIST OF ITEMS USED:

ITEM 580.01M - REMOVAL OF STRUCTURAL CONCRETE (CM)
ITEM 582.05M - REM. OF STRUC. CONC. - REPLACE WITH CLASS A CONCRETE (CM)
ITEM 585.02M - STRUCTURAL LIFTING OPERATION - TYPE C (EACH)
ITEM 589.520001M - REMOVAL OF EXISITING STEEL (EACH)

ALL DIMENSIONS ARE IN mm UNLESS OTHERWISE NOTED

AS BUILT REVISIONS

SIGNATURE DATE

INTERSTATE 481 SB
OVER
CSX RAILROAD YARD
PIER 5

STATE OF NEW YORK
DEPARTMENT OF TRANSPORTATION

FILENAME	REGION	DATE	DRAWING NO.
305613AE.P5A	3	10/02	PR17-8S

DESIGN SUPERVISOR ____ JOB MANAGER ____ DESIGNED BY ____ DRAFTED BY ____ CHECKED BY ____ ESTIMATED BY ____ CHECKED BY ____

FED ROAD REG. NO.	STATE	CONTRACT NO.	SHEET NO.	TOTAL SHEETS
1	N.Y.	D259214	305	432

BRIDGE REHABILITATION PROJECT (ELEMENT SPECIFIC)
VARIOUS BRIDGES ON INTERSTATE 481
TOWNS OF DEWITT AND CICERO
COUNTY OF ONONDAGA
P.I.N. 305613 B.I.N. 1093571

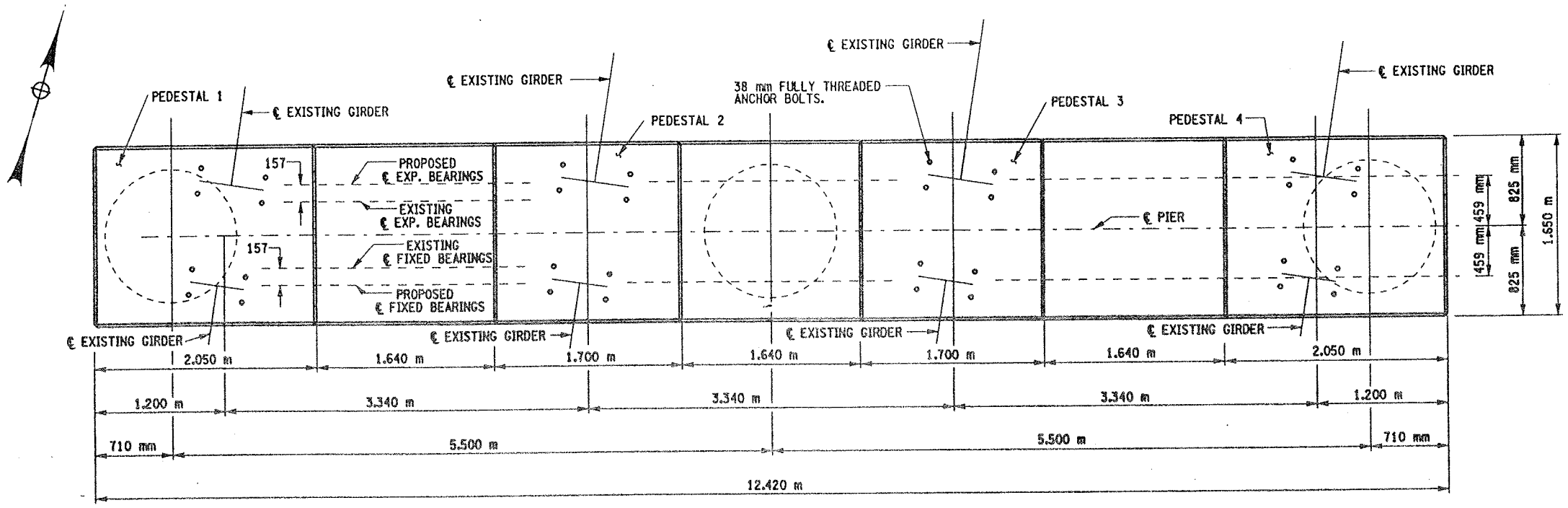

PROPOSED
PLAN
SCALE 1:25

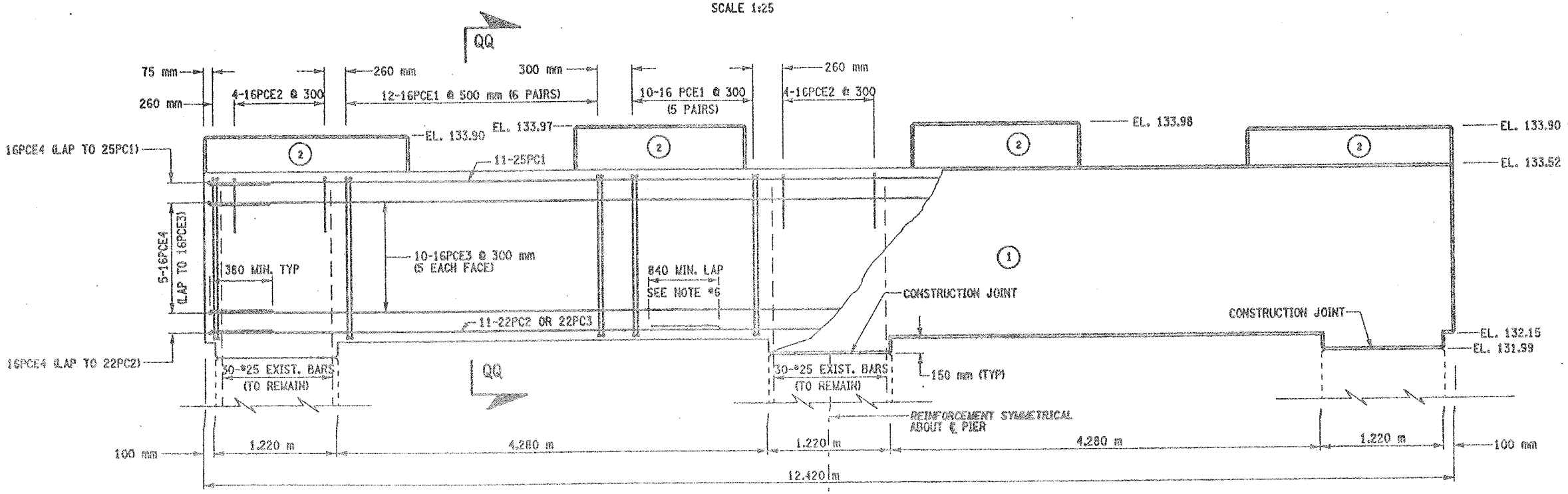

(NO.) INDICATES CONCRETE PLACEMENT NUMBER

PROPOSED
ELEVATION
SCALE 1:25

CONCRETE TABLE (m³)		
PLACEMENT	QUANTITY	ITEM NO.
1	5.12	555.09M
2	28.60	555.09M

NOTES:

1. THESE ELEVATIONS MAY HAVE TO BE ADJUSTED TO ACCOMMODATE THE ACTUAL BEARINGS FURNISHED. IT IS THE RESPONSIBILITY OF THE CONTRACTOR TO COORDINATE ANY CHANGES IN THE BEARINGS WHICH MAY AFFECT THE PEDESTAL ELEVATIONS OR DIMENSIONS.
2. SEE DWG. NO. PR17-7S FOR ANCHOR BOLT LAYOUT, PEDESTAL REINFORCEMENT DETAIL AND SECTION Q-Q FOR CHAMFER DETAIL.
3. SEE DWG. NO. BL-6 FOR BARLIST AND BAR BENDING DIAGRAMS.
4. SEE BR-1 AND BR-2 FOR BEARING DETAILS.
5. CONTRACTOR SHALL REMOVE DEBRIS FROM TOP OF PEDESTALS AND TOP OF CAP BEAM. COST TO BE INCLUDED IN THE PRICE BID FOR VARIOUS OTHER ITEMS OF CONTRACT.
6. REINFORCING BAR LAPS, IF REQUIRED, SHALL BE STAGGERED SO THAT NO MORE THAN 50% OF THE BARS ARE LAPPED AT ANY ONE LOCATION.

LIST OF ITEMS USED:

ITEM 555.09M - CONCRETE FOR STRUCTURES, CLASS HP (CM)
ITEM 556.0201M - UNCOATED BAR REINFORCEMENT FOR CONCRETE STRUC. (KG)
ITEM 556.0202M - EPOXY-COATED BAR REINFORCEMENT FOR STRUC. (KG)

0.5 0 0.5 1 1.5 2 2.5 m
SCALE

ALL DIMENSIONS ARE IN mm UNLESS OTHERWISE NOTED

AS BUILT REVISIONS

SIGNATURE DATE

INTERSTATE 481 SB
OVER
CSX RAILROAD YARD
PIER 5

STATE OF NEW YORK
DEPARTMENT OF TRANSPORTATION

FILENAME	REGION	DATE	DRAWING NO.
305613AE.P5A	3	10/02	PR17-9S

DESIGN SUPERVISOR JOB MANAGER DESIGNED BY DRAFTED BY ESTIMATED BY CHECKED BY

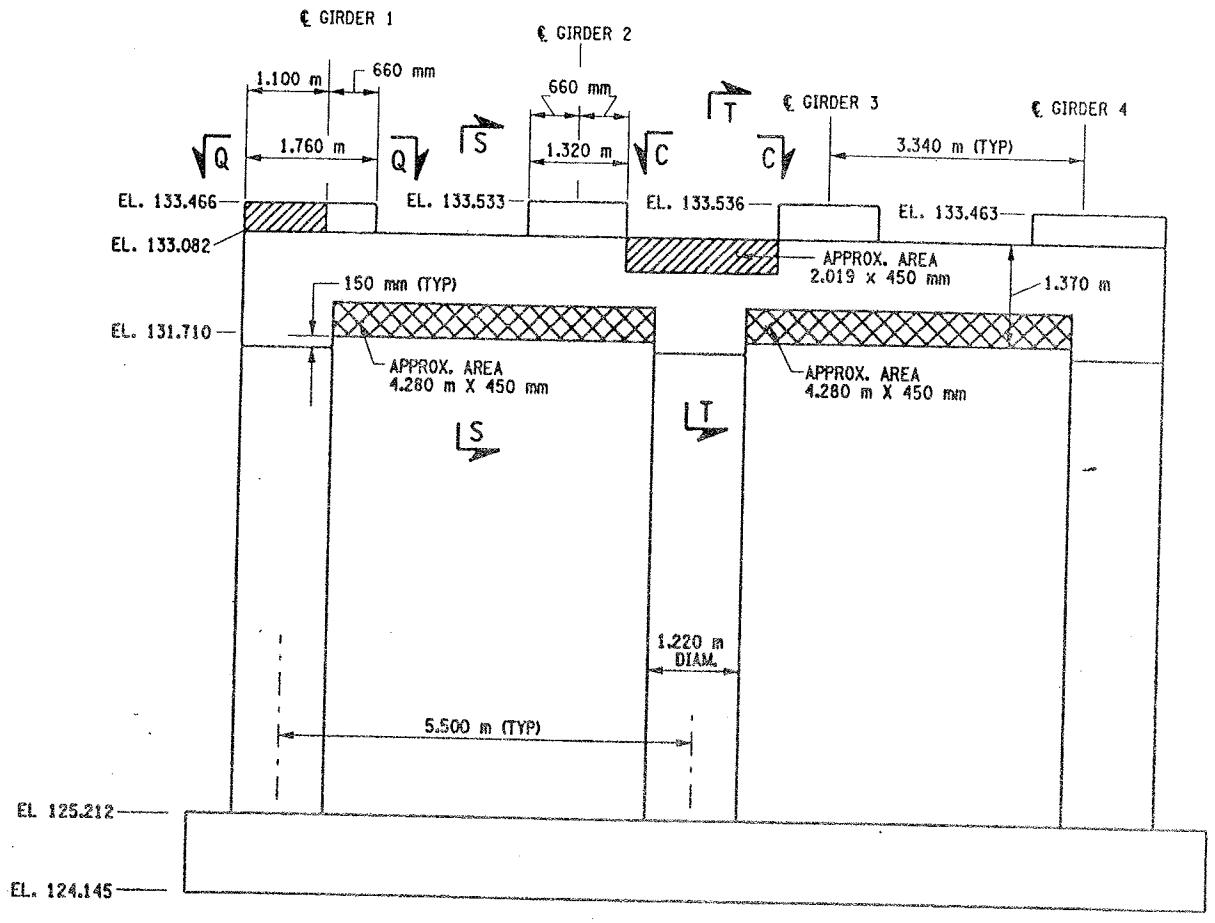

PIER 6 - FRONT FACE (LOOKING NORTH)

BIN 1093571

SCALE: 1 TO 50

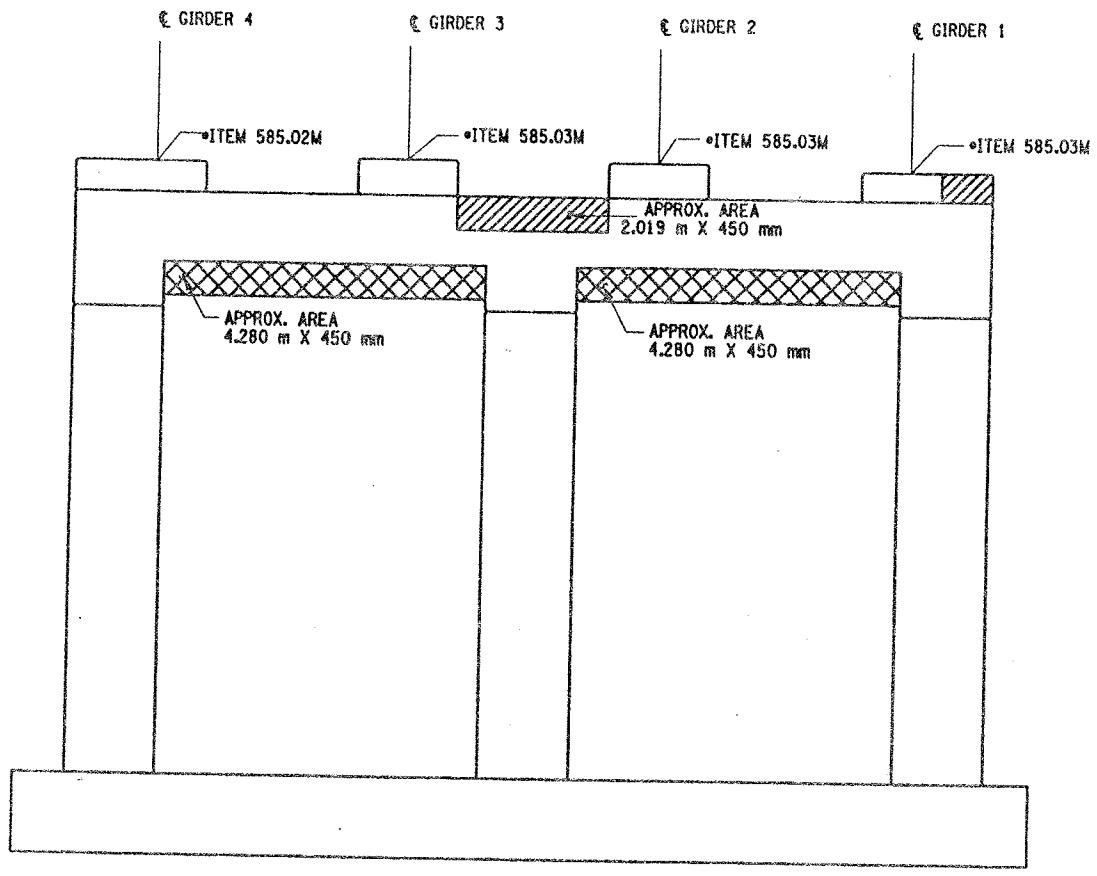

PIER 6- BACK FACE (LOOKING SOUTH)

BIN 1093571

SCALE: 1 TO 50

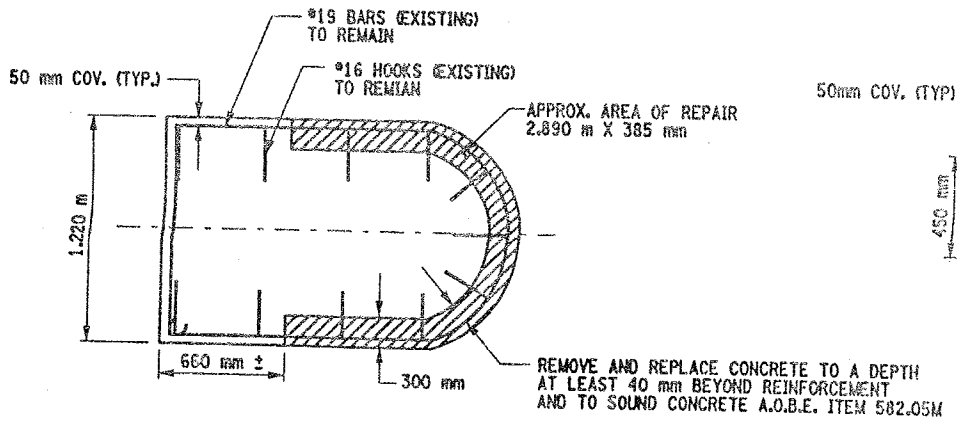

SECTION Q-Q

NOT TO SCALE

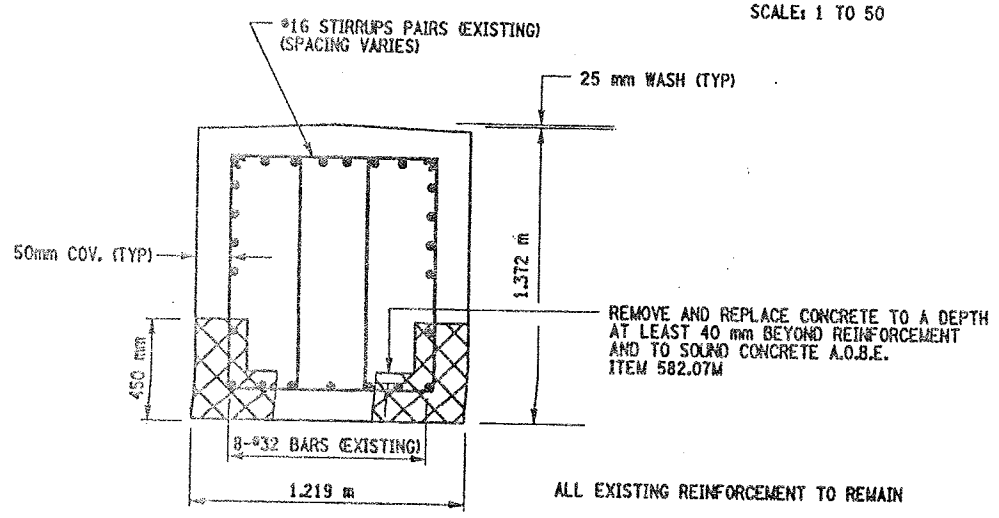

SECTION S-S

NOT TO SCALE

ALL EXISTING REINFORCEMENT TO REMAIN

LIST OF ITEMS USED:

ITEM 15565.4302M - BRIDGE BEARING RESTORATION (EA)
ITEM 582.05M - REM. OF STRUC. CONC. - REPLACE WITH CLASS A CONCRETE (CM)
ITEM 582.07M - REM. OF STRUC. CONC. - REPL. W/ VERT. OVERHEAD PATCH MAT'L (SM)
ITEM 585.02M - STRUCTURAL LIFTING OPERATIONS - TYPE B (EA)
ITEM 585.03M - STRUCTURAL LIFTING OPERATION - TYPE C (EA)

FED ROAD REG. NO.	STATE	CONTRACT NO.	SHEET NO.	TOTAL SHEETS
1	N.Y.	D259214	306	432

BRIDGE REHABILITATION PROJECT (ELEMENT SPECIFIC)

VARIOUS BRIDGES ON INTERSTATE 481

TOWNS OF DEWITT AND CICERO

ONONDAGA COUNTY

P.I.N. 305613 | B.I.N. 1093571

NOTES:

1. ALL REINFORCEMENT TO REMAIN.
2. RESTORE TO ORIGINAL DIMENSIONS.
3. PEDESTALS NUMERICALLY NUMBERED FROM WEST TO EAST.
4. FOR THE CONCRETE REPAIR AREAS, THE CONCRETE SHALL BE REMOVED TO AT LEAST 40mm MIN. BEYOND THE ENCOUNTERED REINFORCEMENT AND TO SOUND CONCRETE, A.O.B.E.
5. ELEVATIONS SHOWN ARE FROM ORIGINAL CONTRACT PLANS F.I.S.H. 70-7 AND ARE FOR REFERENCE ONLY.
6. REMOVAL DIMENSIONS SHOWN ON PLANS ARE ESTIMATED AND SHALL BE FIELD VERIFIED BY THE CONTRACTOR AND ENGINEER PRIOR TO BEGINNING OF REMOVAL OPERATIONS A.O.B.E.
7. PERFORM BEARING RESTORATION TO ALL EXPANSION BEARINGS (TO INCLUDE RESETTING OF UNDEREXTENDED OR OVEREXTENDED BEARINGS). SEE DWG. BR-10 & BR-11 FOR BEARING RESTORATION DETAILS. SEE DWG. PR17-1S FOR BEARING RESTORATION NOTES.
8. SEE DWG. PR17-1S FOR SECTION C-C.
9. SEE DWG. PR17-5N FOR SECTION T-T.
10. ALL CONCRETE REMOVAL SHALL BE SAWCUT TO PRODUCE NEAT REMOVAL LINES. COST TO BE INCLUDED IN THE PRICE BID FOR ITEM 582.05M AND 582.07M.
11. FOR JACKING NOTES SEE DWG PR17-1S.

• PERFORM STRUCTURAL LIFTING UNDER ITEM 585.02M - STRUCTURAL LIFTING OPERATIONS - TYPE B (LIFTING AT A PIER) OR ITEM 585.03M - STRUCTURAL LIFTING OPERATIONS - TYPE C (LIFTING AT A PIER WHERE THE CONTRACTOR SHALL BE REQUIRED TO LIFT OFF THE FOOTING AND/OR GROUND LEVEL.

JACKING LOADS:

D.L. = 75 MT
L.L. = 50 MT
TOTAL = 125 MT

LEGEND:

ITEM 582.05M - REMOVAL OF STRUCTURAL CONCRETE- REPLACE WITH CLASS A CONCRETE (CM)

ITEM 582.07M - REMOVAL OF STRUCTURAL CONCRETE - REPLACE WITH VERTICAL OVERHEAD PATCH MATERIAL. (SM)

ALL DIMENSIONS ARE IN mm UNLESS OTHERWISE NOTED

AS BUILT REVISIONS

SIGNATURE DATE

INTERSTATE 481 SB
OVER
CSX RAILROAD YARD
PIER 6

STATE OF NEW YORK
DEPARTMENT OF TRANSPORTATION

FILENAME	REGION	DATE	DRAWING NO.
305613AE_P6A	3	10/02	PR17-10S

DESIGN SUPERVISOR — JOB MANAGER — DESIGNED BY — CHECKED BY — ESTIMATED BY — DRAFTED BY — CHECKED BY

FED ROAD REG. NO.	STATE	CONTRACT NO.	SHEET NO.	TOTAL SHEETS
1	N.Y.	D259214	307	432

BRIDGE REHABILITATION PROJECT (ELEMENT SPECIFIC)
VARIOUS BRIDGES ON INTERSTATE 481
TOWNS OF DEWITT AND CICERO
ONONDAGA COUNTY
P.I.N. 305613 B.I.N. 1093571

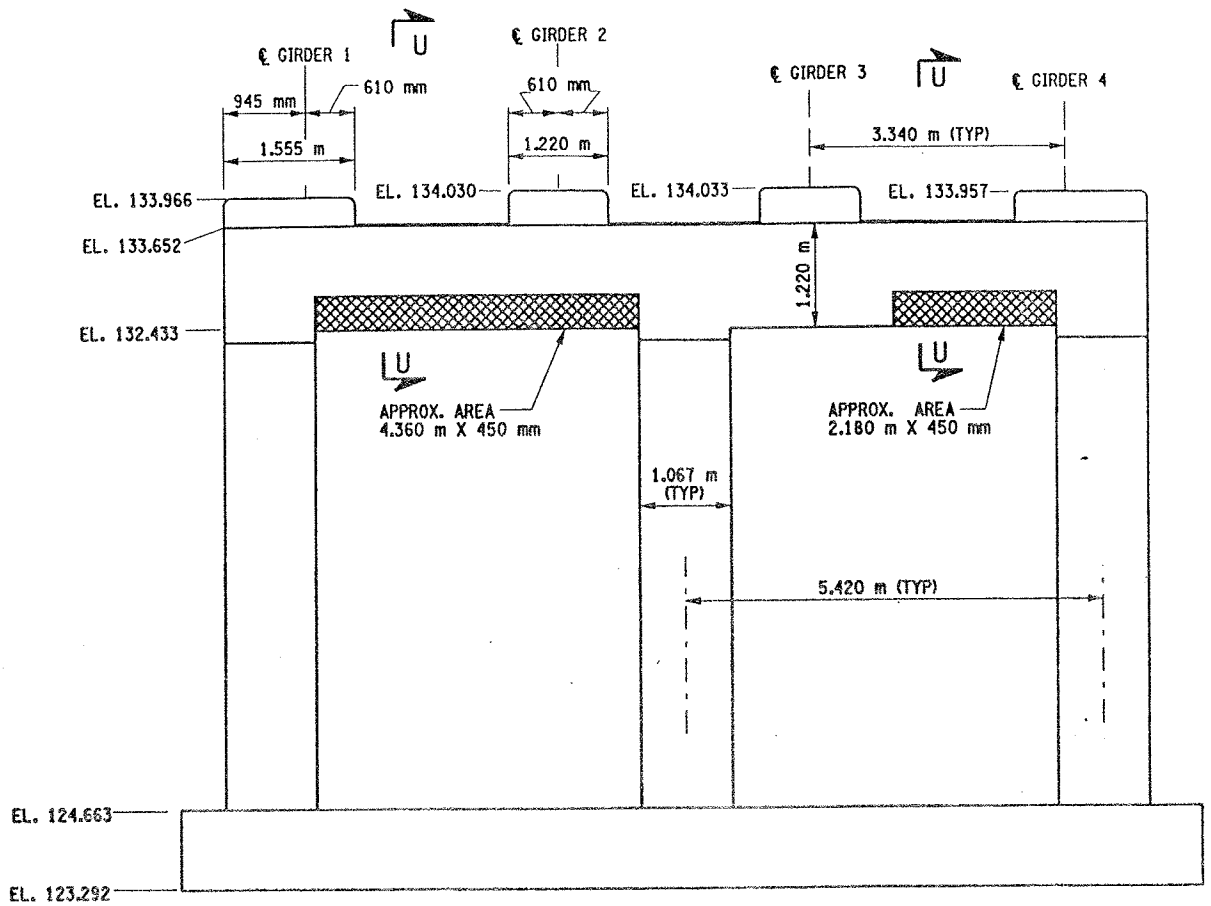

PIER 7 - FRONT FACE LOOKING NORTH
BIN 1093571
SCALE: 1 TO 50

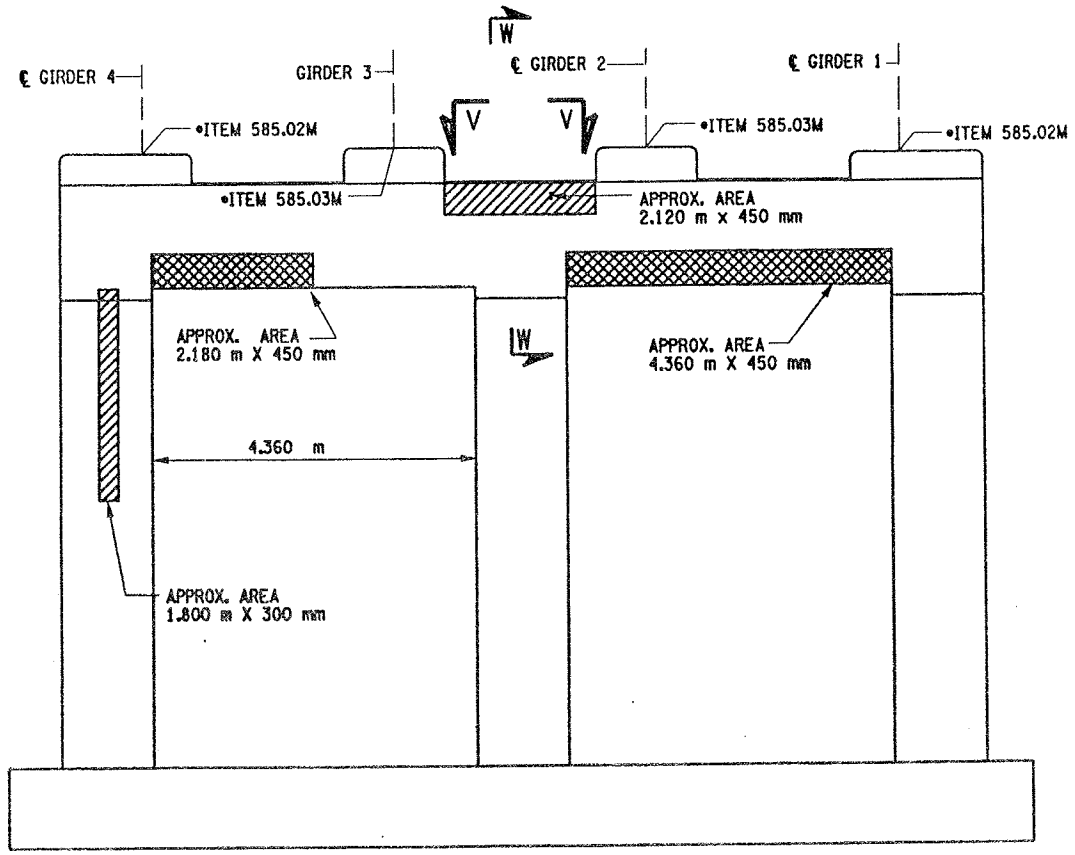

PIER 7 - BACK FACE LOOKING SOUTH
BIN 1093571
SCALE: 1 TO 50

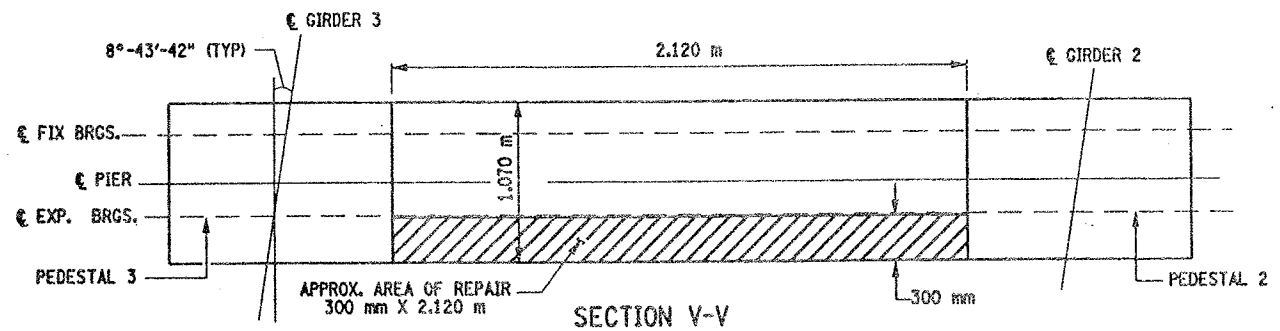

SECTION V-V
NOT TO SCALE

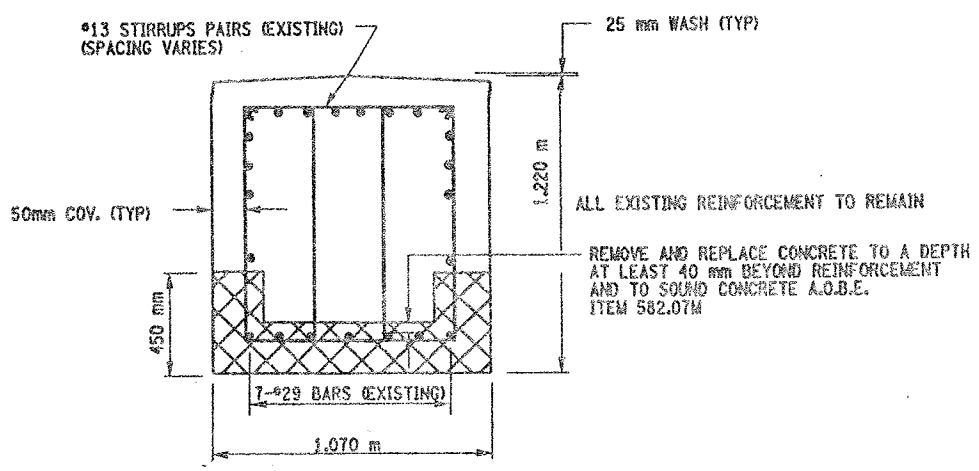

SECTION U-U
NOT TO SCALE

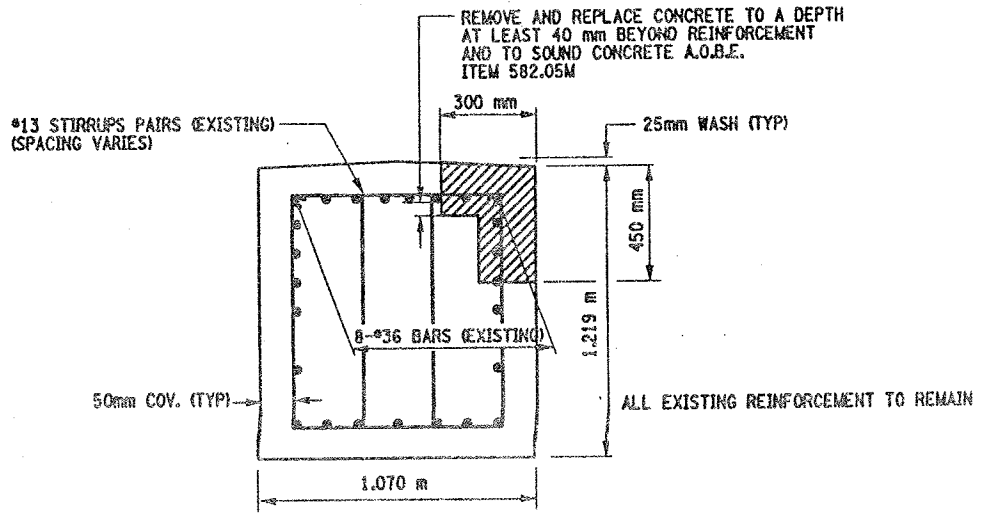

SECTION W-W
NOT TO SCALE

NOTES:

1. ALL REINFORCEMENT TO REMAIN.
2. RESTORE TO ORIGINAL DIMENSIONS.
3. PEDESTALS NUMERICALLY NUMBERED FROM WEST TO EAST.
4. FOR THE CONCRETE REPAIR AREAS, THE CONCRETE SHALL BE REMOVED TO AT LEAST 40mm MIN. BEYOND THE ENCOUNTERED REINFORCEMENT AND TO SOUND CONCRETE, A.O.B.E.
5. ELEVATIONS SHOWN ARE FROM ORIGINAL CONTRACT PLANS F.I.S.H. 70-7 AND ARE FOR REFERENCE ONLY.
6. REMOVAL DIMENSIONS SHOWN ON PLANS ARE ESTIMATED AND SHALL BE FIELD VERIFIED BY THE CONTRACTOR PRIOR TO BEGINNING OF REMOVAL OPERATIONS A.O.B.E.
7. PERFORM BEARING RESTORATION TO ALL EXPANSION BEARINGS (TO INCLUDE RESETTING OF UNDEREXTENDED OR OVEREXTENDED BEARINGS). SEE DWG. PR17-1S FOR BEARING RESTORATION NOTES. SEE DWG. BR-10 & BR-11 FOR BEARING RESTORATION DETAILS.
8. ALL CONCRETE REMOVAL SHALL BE SAWCUT TO PRODUCE NEAT REMOVAL LINES. COST TO BE INCLUDED IN THE PRICE BID FOR ITEM 582.05M AND 582.07M.
9. FOR JACKING NOTES SEE DWG PR17-1S.

• PERFORM STRUCTURAL LIFTING UNDER ITEM 585.02M - STRUCTURAL LIFTING OPERATIONS - TYPE B (LIFTING AT A PIER) OR ITEM 585.03M - STRUCTURAL LIFTING OPERATIONS - TYPE C (LIFTING AT A PIER WHERE THE CONTRACTOR SHALL BE REQUIRED TO LIFT OFF THE FOOTING AND/OR GROUND LEVEL.

JACKING LOADS:

D.L. = 75 MT
L.L. = 50 MT
TOTAL = 125 MT

LEGEND:

ITEM 582.05M - REMOVAL OF STRUCTURAL CONCRETE- REPLACE WITH CLASS A CONCRETE (CM)

ITEM 582.07M - REMOVAL OF STRUCTURAL CONCRETE - REPLACE WITH VERTICAL OVERHEAD PATCH MATERIAL, (SM)

LIST OF ITEMS USED:

ITEM 15565.4302M - BRIDGE BEARING RESTORATION
ITEM 582.05M - REM. OF STRUC. CONC. - REPLACE WITH CLASS A CONCRETE (CM)
ITEM 582.07M - REM. OF STRUC. CONC. - REPL. W/ VERT. OVERHEAD PATCH MAT'L (SM)
ITEM 585.02M - STRUCTURAL LIFTING OPERATIONS - TYPE B (EA)
ITEM 585.03M - STRUCTURAL LIFTING OPERATION - TYPE C (EA)

ALL DIMENSIONS ARE IN mm UNLESS OTHERWISE NOTED

AS BUILT REVISIONS

SIGNATURE DATE

INTERSTATE 481 SB
OVER
CSX RAILROAD YARD
PIER 7

STATE OF NEW YORK
DEPARTMENT OF TRANSPORTATION

FILENAME	REGION	DATE	DRAWING NO.
305613AEJP7A	3	10/02	PR17-11S

DESIGN SUPERVISOR ___ JOB MANAGER ___ DESIGNED BY ___ CHECKED BY ___ DRAFTED BY ___ ESTIMATED BY ___

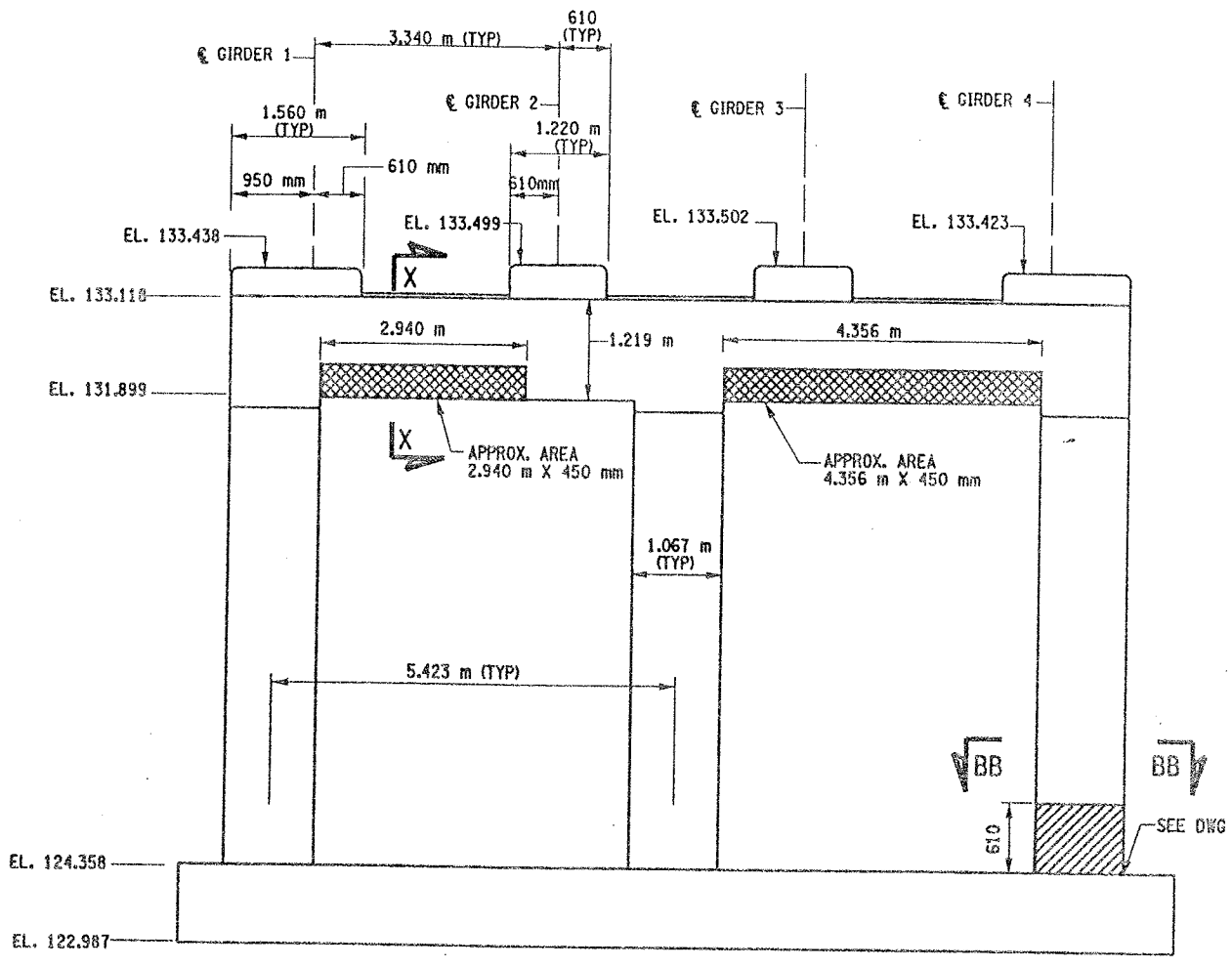

PIER 8 - FRONT FACE (LOOKING NORTH)

BIN 1093571

SCALE: 1 TO 50

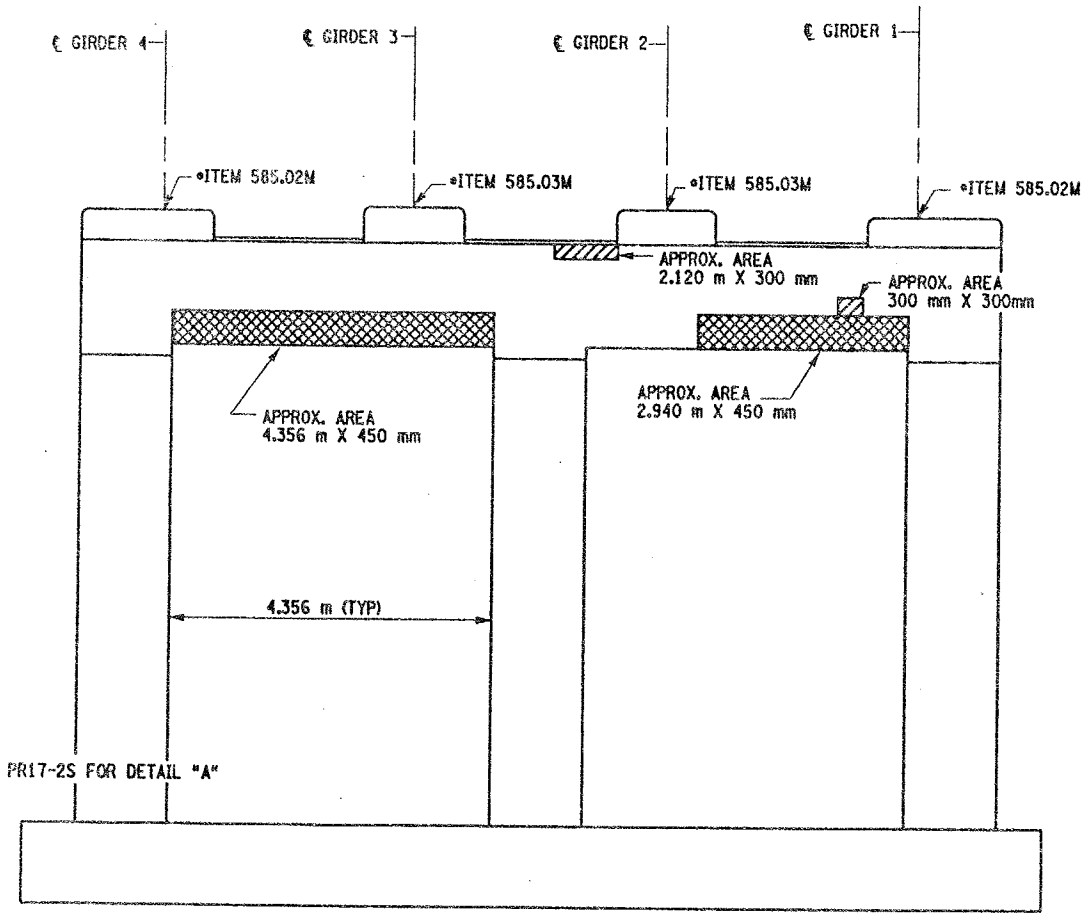

PIER 8 - BACK FACE (LOOKING SOUTH)

BIN 1093571

SCALE: 1 TO 50

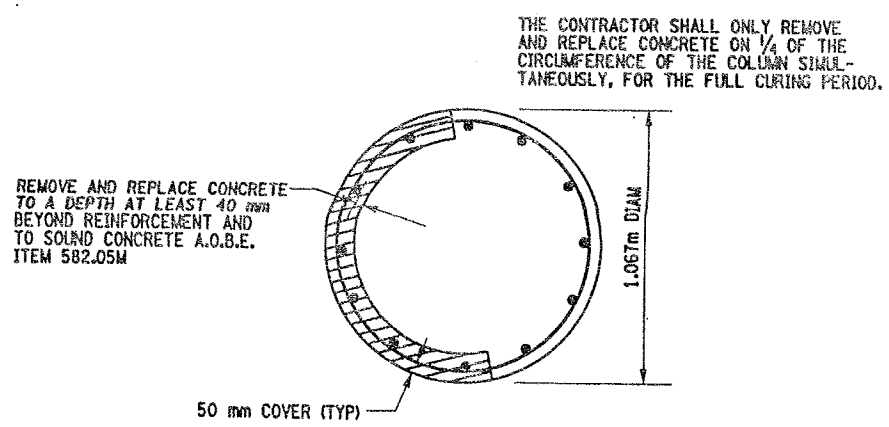

SECTION BB-BB

NOT TO SCALE

LIST OF ITEMS USED:

ITEM 582.05M - REM. OF STRUC. CONC. - REPLACE WITH CLASS A CONCRETE (CM)
ITEM 582.07M - REM. OF STRUC. CONC. - REPL. W/ VERT. OVERHEAD PATCH MAT'L (SM)
ITEM 585.02M - STRUCTURAL LIFTING OPERATIONS - TYPE B (EA)
ITEM 585.03M - STRUCTURAL LIFTING OPERATION - TYPE C (EA)

FED ROAD REG. NO.	STATE	CONTRACT NO.	SHEET NO.	TOTAL SHEETS
1	N.Y.	D259214	308	432

BRIDGE REHABILITATION PROJECT (ELELMENT SPECIFIC)

VARIOUS BRIDGES ON INTERSTATE 481

TOWNS OF DEWITT AND CICERO

ONONDAGA COUNTY

P.I.N. 305613 | B.I.N. 1093571

NOTES:

1. ALL REINFORCEMENT TO REMAIN.
2. RESTORE TO ORIGINAL DIMENSIONS.
3. PEDESTALS NUMERICALLY NUMBERED FROM WEST TO EAST.
4. FOR THE CONCRETE REPAIR AREAS, THE CONCRETE SHALL BE REMOVED TO AT LEAST 40mm MIN. BEYOND THE ENCOUNTERED REINFORCEMENT AND TO SOUND CONCRETE, A.O.B.E.
5. ELEVATIONS SHOWN ARE FROM ORIGINAL CONTRACT PLANS F.I.S.H. 70-7 AND ARE FOR REFERENCE ONLY.
6. REMOVAL DIMENSIONS SHOWN ON PLANS ARE ESTIMATED AND SHALL BE FIELD VERIFIED BY THE CONTRACTOR AND ENGINEER PRIOR TO BEGINNING OF REMOVAL OPERATIONS A.O.B.E.
7. SEE DWG. PR17-7N FOR SECTIONS X-X.
8. ALL CONCRETE REMOVAL SHALL BE SAWCUT TO PRODUCE NEAT REMOVAL LINES. COST TO BE INCLUDED IN THE PRICE BID FOR ITEM 582.05M AND ITEM 582.07M.
9. FOR JACKING NOTES SEE DWG. PR17-1S
10. CONTRACTOR SHALL REMOVE DEBRIS FROM TOP OF PEDESTALS AND TOP OF CAP BEAM. COST TO BE INCLUDED IN THE PRICE BID FOR VARIOUS OTHER ITEMS OF THE CONTRACT.

LEGEND:

ITEM 582.05M - REMOVAL OF STRUCTURAL CONCRETE- REPLACE WITH CLASS A CONCRETE (CM)

ITEM 582.07M - REMOVAL OF STRUCTURAL CONCRETE - REPLACE WITH VERTICAL OVERHEAD PATCH MATERIAL. (SM)

• PERFORM STRUCTURAL LIFTING UNDER ITEM 585.02M - STRUCTURAL LIFTING OPERATIONS - TYPE B (LIFTING AT A PIER) OR ITEM 585.03M - STRUCTURAL LIFTING OPERATIONS - TYPE C (LIFTING AT A PIER WHERE THE CONTRACTOR SHALL BE REQUIRED TO LIFT OFF THE FOOTING AND/OR GROUND LEVEL.

JACKING LOADS:

D.L. = 75 MT
L.L. = 50 MT
TOTAL = 125 MT

ALL DIMENSIONS ARE IN mm UNLESS OTHERWISE NOTED

AS BUILT REVISIONS

SIGNATURE DATE

INTERSTATE 481 SB
OVER
CSX RAILROAD
PIER 8

STATE OF NEW YORK
DEPARTMENT OF TRANSPORTATION

FILENAME	REGION	DATE	DRAWING NO.
305613AE_P8A	3	10/02	PR17-12S

DESIGN SUPERVISOR ____ JOB MANAGER ____ DESIGNED BY ____ CHECKED BY ____ ESTIMATED BY ____ DRAFTED BY ____ CHECKED BY

FED ROAD REG. NO.	STATE	CONTRACT NO.	SHEET NO.	TOTAL SHEETS
1	N.Y.	D259214	309	432

BRIDGE REHABILITATION PROJECT (ELEMENT SPECIFIC)
VARIOUS BRIDGES ON INTERSTATE 481
TOWNS OF DEWITT AND CICERO
ONONDAGA COUNTY
P.I.N. 305613 B.I.N. 1093571

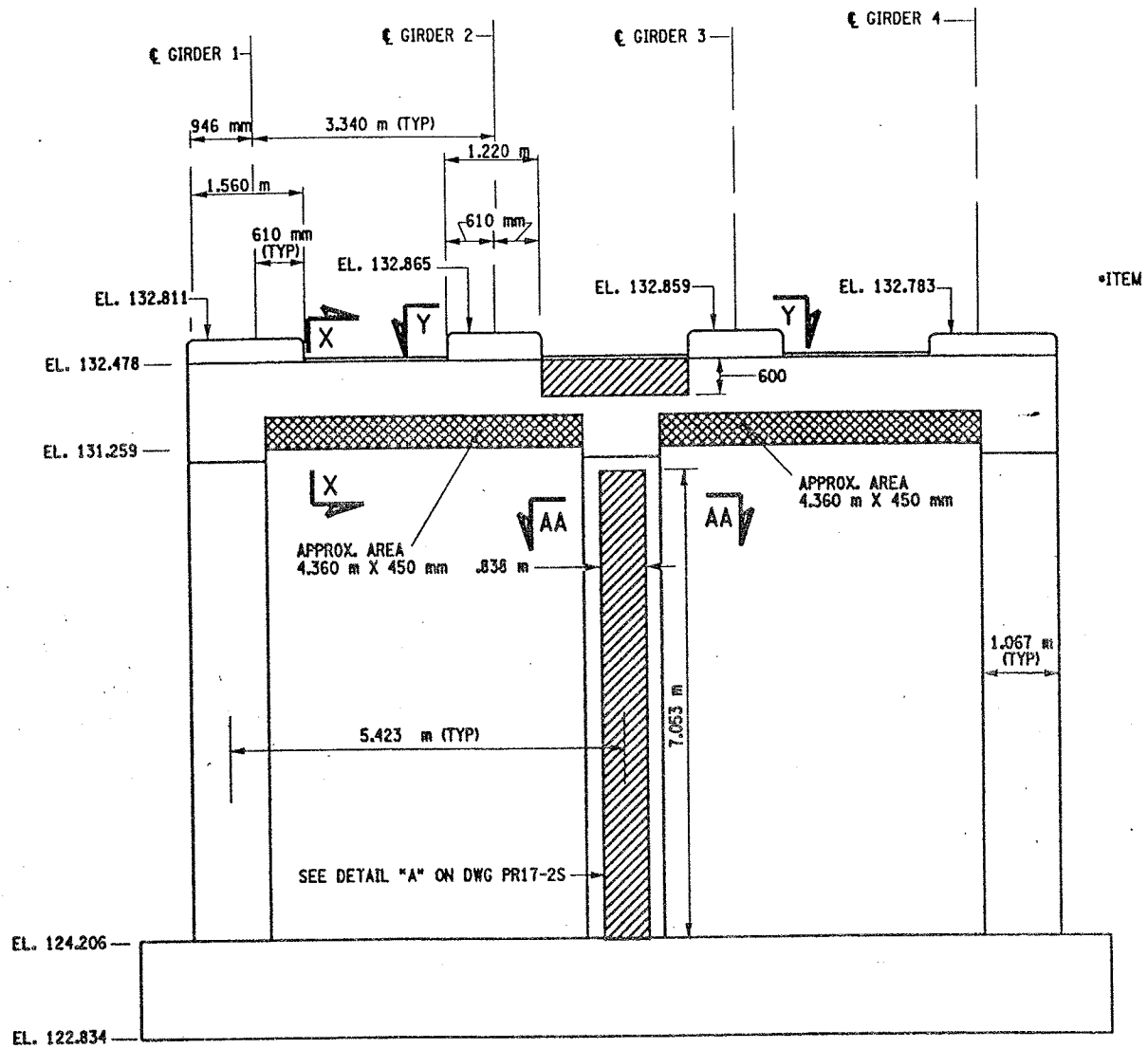

PIER 9 - FRONT FACE (LOOKING NORTH)
BIN 1093571
SCALE: 1 TO 50

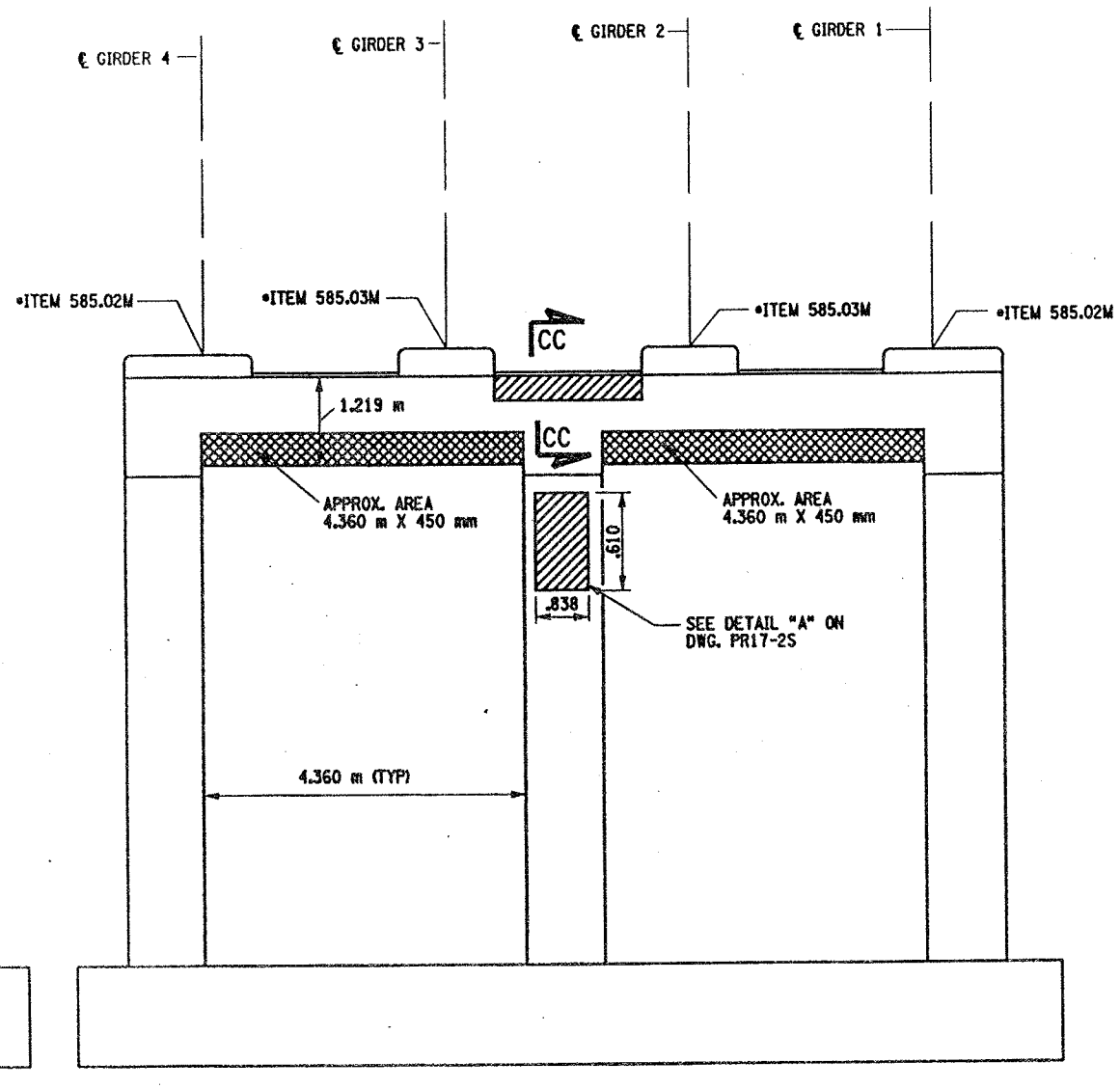

PIER 9 - BACK FACE (LOOKING SOUTH)
BIN 1093571
SCALE: 1 TO 50

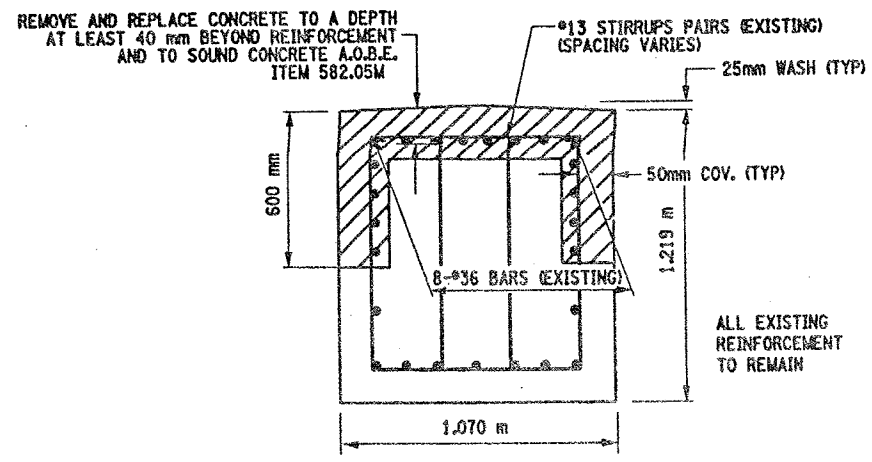

SECTION CC-CC
NOT TO SCALE

NOTES:

1. ALL REINFORCEMENT TO REMAIN.
2. RESTORE TO ORIGINAL DIMENSIONS.
3. PEDESTALS NUMERICALLY NUMBERED FROM WEST TO EAST.
4. FOR THE CONCRETE REPAIR AREAS, THE CONCRETE SHALL BE REMOVED TO AT LEAST 40mm MIN. BEYOND THE ENCOUNTERED REINFORCEMENT AND TO SOUND CONCRETE, A.O.B.E.
5. ELEVATIONS SHOWN ARE FROM ORIGINAL CONTRACT PLANS F.I.S.H. 70-7 AND ARE FOR REFERENCE ONLY.
6. REMOVAL DIMENSIONS SHOWN ON PLANS ARE ESTIMATED AND SHALL BE FIELD VERIFIED BY THE CONTRACTOR PRIOR TO BEGINNING OF REMOVAL OPERATIONS A.O.B.E.
7. PERFORM BEARING RESTORATION TO ALL EXPANSION BEARINGS (TO INCLUDE RESETTING OF UNDEREXTENDED OR OVEREXTENDED BEARINGS). SEE DWG. PR17-1S FOR BEARING RESTORATION NOTES. SEE DWG. BR-10 & BR-11 FOR BEARING RESTORATION DETAILS.
8. SEE DWG. PR17-7N FOR SECTIONS AA-AA, Y-Y AND X-X.
9. ALL CONCRETE REMOVAL SHALL BE SAWCUT TO PRODUCE NEAT REMOVAL LINES. COST TO BE INCLUDED IN THE PRICE BID FOR ITEM 582.05M AND 582.07M.
10. FOR JACKING NOTES SEE DWG PR17-1S
11. CONTRACTOR SHALL REMOVE DEBRIS FROM TOP OF CAP BEAM. COST TO BE INCLUDED IN THE PRICE BID FOR VARIOUS OTHER ITEMS OF CONTRACT.

• PERFORM STRUCTURAL LIFTING UNDER ITEM 585.02M - STRUCTURAL LIFTING OPERATIONS - TYPE B (LIFTING AT A PIER) OR ITEM 585.03M - STRUCTURAL LIFTING OPERATIONS - TYPE C (LIFTING AT A PIER WHERE THE CONTRACTOR SHALL BE REQUIRED TO LIFT OFF THE FOOTING AND/OR GROUND LEVEL.

JACKING LOADS:

D.L. = 75 MT
L.L. = 50 MT
TOTAL = 125 MT

LEGEND:

ITEM 582.05M - REMOVAL OF STRUCTURAL CONCRETE- REPLACE WITH CLASS A CONCRETE. (CM)

ITEM 582.07M - REMOVAL OF STRUCTURAL CONCRETE - REPLACE WITH VERTICAL OVERHEAD PATCH MATERIAL. (SM)

LIST OF ITEMS USED:

ITEM 15565.4302M - BRIDGE BEARING RESTORATION (EA)
ITEM 582.05M - REM. OF STRUC. CONC. - REPLACE WITH CLASS A CONCRETE (CM)
ITEM 582.07M - REM. OF STRUC. CONC. - REPL. W/ VERT. OVERHEAD PATCH MAT'L. (SM)
ITEM 585.02M - STRUCTURAL LIFTING OPERATIONS - TYPE B (EA)
ITEM 585.03M - STRUCTURAL LIFTING OPERATION - TYPE C (EA)

ALL DIMENSIONS ARE IN mm UNLESS OTHERWISE NOTED

AS BUILT REVISIONS

SIGNATURE DATE

INTERSTATE 481 SB
OVER
CSX RAILROAD YARD
PIER 9

STATE OF NEW YORK
DEPARTMENT OF TRANSPORTATION

FILENAME	REGION	DATE	DRAWING NO.
305613AE.P9A	3	10/02	PR17-13S

DESIGN SUPERVISOR ____ JOB MANAGER ____ DESIGNED BY ____ ESTIMATED BY ____ DRAFTED BY ____ CHECKED BY ____

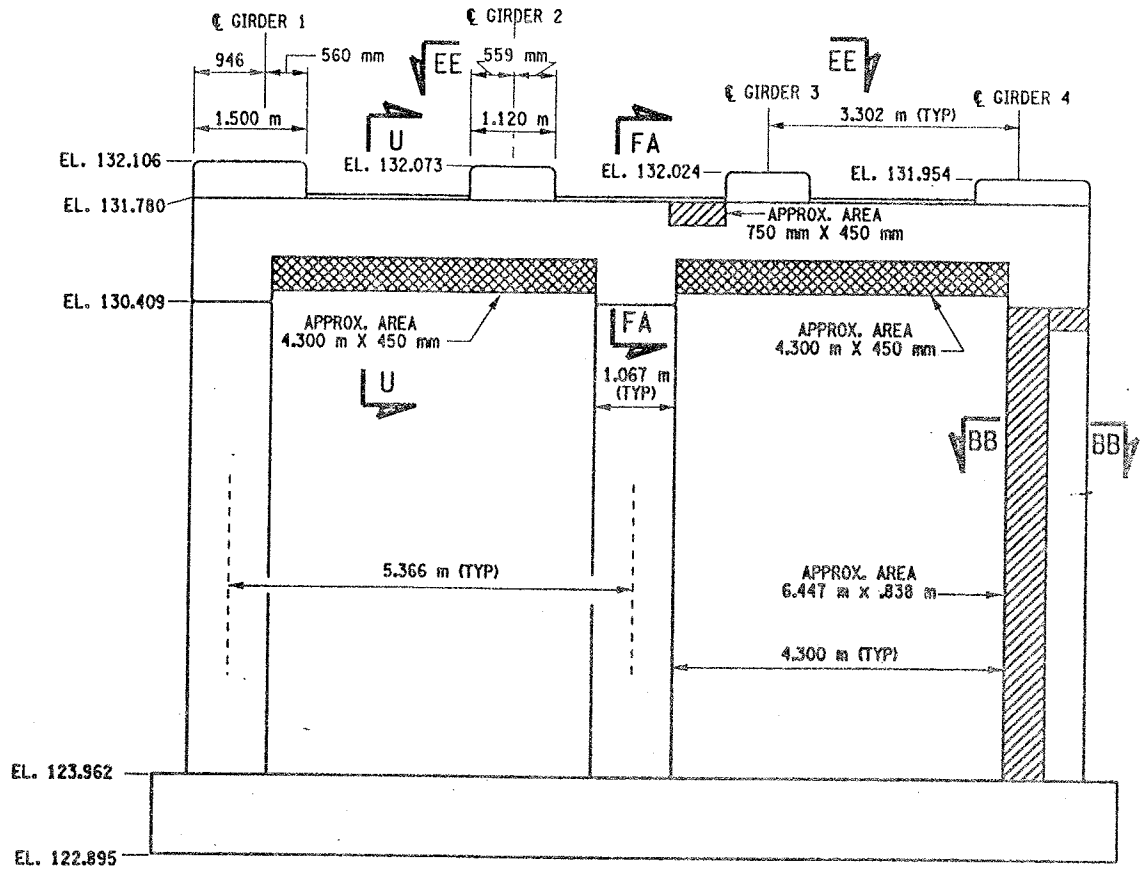

PIER 10 - FRONT FACE (LOOKING NORTH)
BIN 1093571
SCALE: 1 TO 50

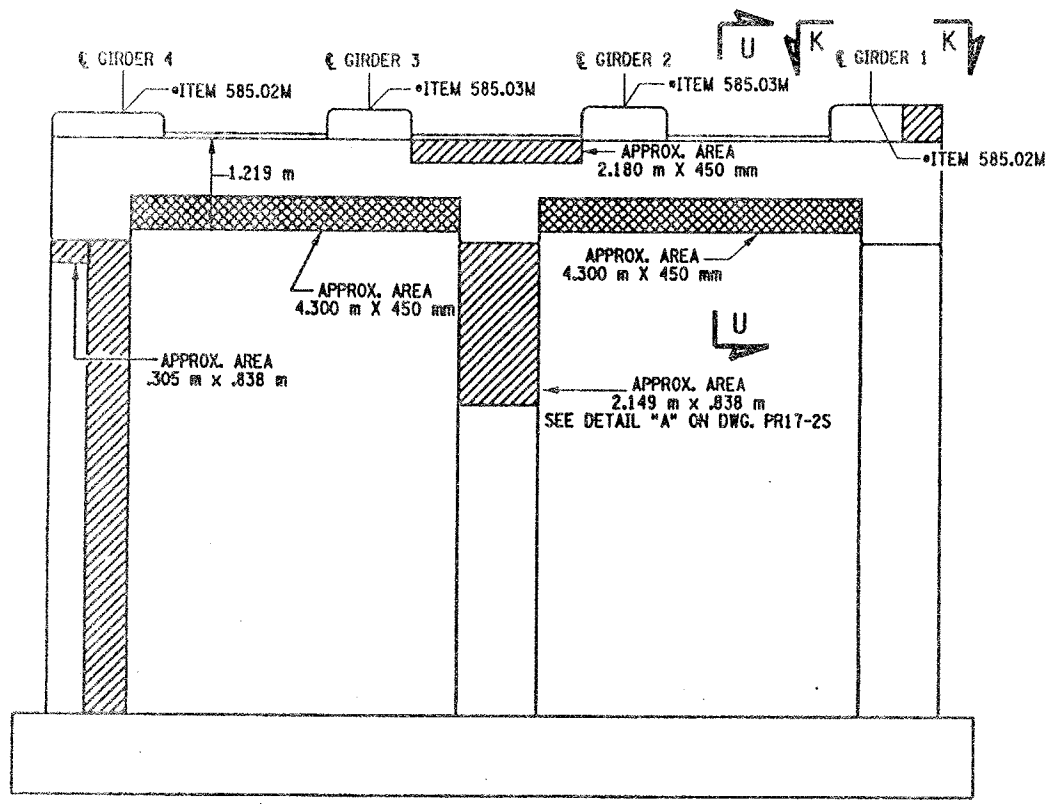

PIER 10 - BACK FACE (LOOKING SOUTH)
BIN 1093571
SCALE: 1 TO 50

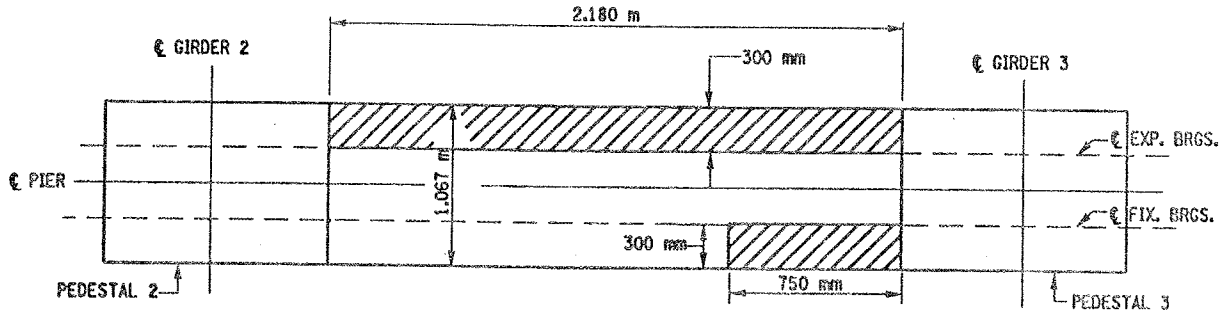

SECTION EE-EE
NOT TO SCALE

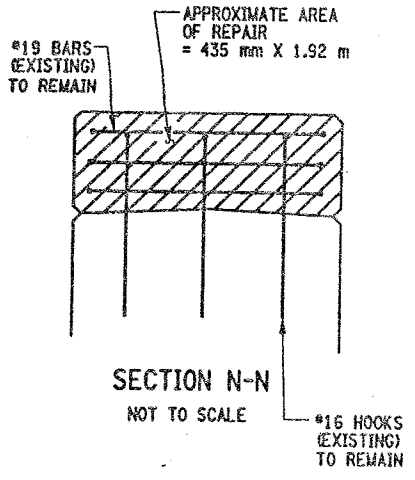

SECTION N-N
NOT TO SCALE

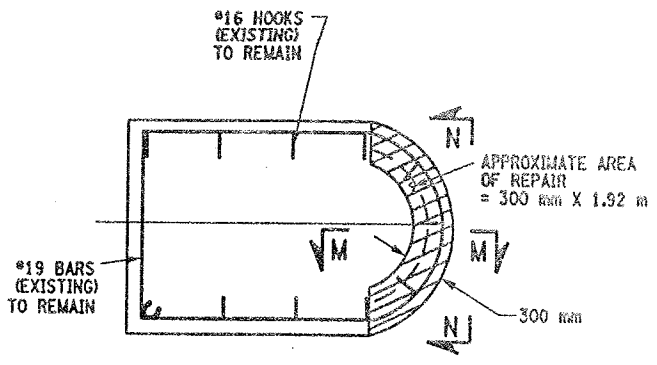

SECTION K-K
NOT TO SCALE

REMOVE AND REPLACE CONCRETE TO A DEPTH
AT LEAST 40 mm BEYOND REINFORCEMENT
AND TO SOUND CONCRETE A.O.B.E.
ITEM 582.05M

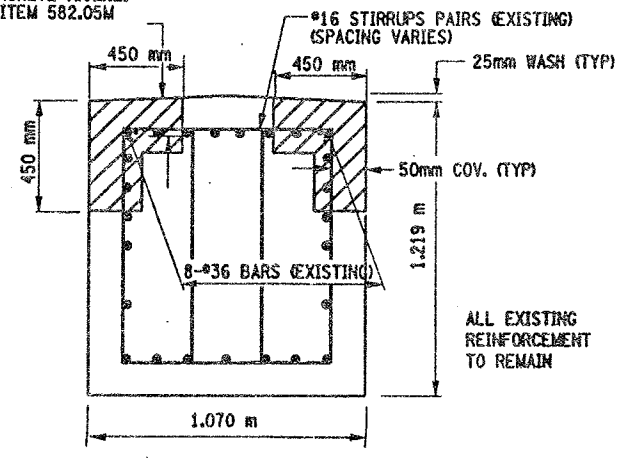

SECTION FA-FA
NOT TO SCALE

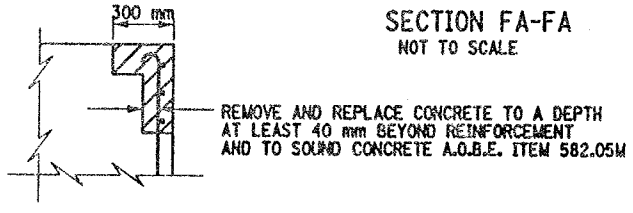

SECTION M-M
NOT TO SCALE

LIST OF ITEMS USED:

ITEM 15565.4302M - BRIDGE BEARING RESTORATION (EA)
ITEM 582.05M - REM. OF STRUC. CONC. - REPLACE WITH CLASS A CONCRETE (CM)
ITEM 582.07M - REM. OF STRUC. CONC. - REPL. W/ VERT. OVERHEAD PATCH MAT'L (SM)
ITEM 585.02M - STRUCTURAL LIFTING OPERATIONS - TYPE B (EA)
ITEM 585.03M - STRUCTURAL LIFTING OPERATION - TYPE C (EA)

FED ROAD REG. NO.	STATE	CONTRACT NO.	SHEET NO.	TOTAL SHEETS
1	N.Y.	D259214	310	432

BRIDGE REHABILITATION PROJECT (ELEMENT SPECIFIC)
VARIOUS BRIDGES ON INTERSTATE 481
TOWNS OF DEWITT AND CICERO
ONONDAGA COUNTY
P.I.N. 305613 B.I.N. 1093571

NOTES:

1. ALL REINFORCEMENT TO REMAIN.
2. RESTORE TO ORIGINAL DIMENSIONS.
3. PEDESTALS NUMERICALLY NUMBERED FROM WEST TO EAST.
4. FOR THE CONCRETE REPAIR AREAS, THE CONCRETE SHALL BE REMOVED TO AT LEAST 40mm MIN. BEYOND THE ENCOUNTERED REINFORCEMENT AND TO SOUND CONCRETE, A.O.B.E.
5. ELEVATIONS SHOWN ARE FROM ORIGINAL CONTRACT PLANS F.I.S.H. 70-7 AND ARE FOR REFERENCE ONLY.
6. REMOVAL DIMENSIONS SHOWN ON PLANS ARE ESTIMATED AND SHALL BE FIELD VERIFIED BY THE CONTRACTOR PRIOR TO BEGINNING OF REMOVAL OPERATIONS A.O.B.E.
7. PERFORM BEARING RESTORATION TO ALL EXPANSION BEARINGS (TO INCLUDE RESETTING OF UNDEREXTENDED OR OVEREXTENDED BEARINGS). SEE DWG. PR17-1S FOR BEARING RESTORATION NOTES. SEE DWG. BR-10 & BR-11 FOR BEARING RESTORATION DETAILS.
8. SEE DWG. PR17-12S FOR SECTION BB-BB.
9. ALL CONCRETE REMOVAL SHALL BE SAWCUT TO PRODUCE NEAT REMOVAL LINES. COST TO BE INCLUDED IN THE PRICE BID FOR ITEM 582.05M AND 582.07M.
10. FOR JACKING NOTES SEE DWG PR17-1S.
11. SEE DWG. PR-17-11S FOR SECTION U-U.

• PERFORM STRUCTURAL LIFTING UNDER ITEM 585.02M - STRUCTURAL LIFTING OPERATIONS - TYPE B (LIFTING AT A PIER) OR ITEM 585.03M - STRUCTURAL LIFTING OPERATIONS - TYPE C (LIFTING AT A PIER WHERE THE CONTRACTOR SHALL BE REQUIRED TO LIFT OFF THE FOOTING AND/OR GROUND LEVEL.

JACKING LOADS:

D.L. = 75 MT
L.L. = 50 MT
TOTAL = 125 MT

LEGEND:

ITEM 582.05M - REMOVAL OF STRUCTURAL CONCRETE- REPLACE WITH CLASS A CONCRETE (CM)

ITEM 582.07M - REMOVAL OF STRUCTURAL CONCRETE - REPLACE WITH VERTICAL OVER-HEAD PATCH MATERIAL. (SM)

ALL DIMENSIONS ARE IN mm UNLESS OTHERWISE NOTED

AS BUILT REVISIONS

SIGNATURE DATE

INTERSTATE 481 SB
OVER
CSX RAILROAD YARD
PIER 10

STATE OF NEW YORK
DEPARTMENT OF TRANSPORTATION

FILENAME	REGION	DATE	DRAWING NO.
305613AE.P10	3	10/02	PR17-14S

DESIGN SUPERVISOR ____ JOB MANAGER ____ DESIGNED BY ____ ESTIMATED BY ____ DRAFTED BY ____ CHECKED BY ____ CHECKED BY ____

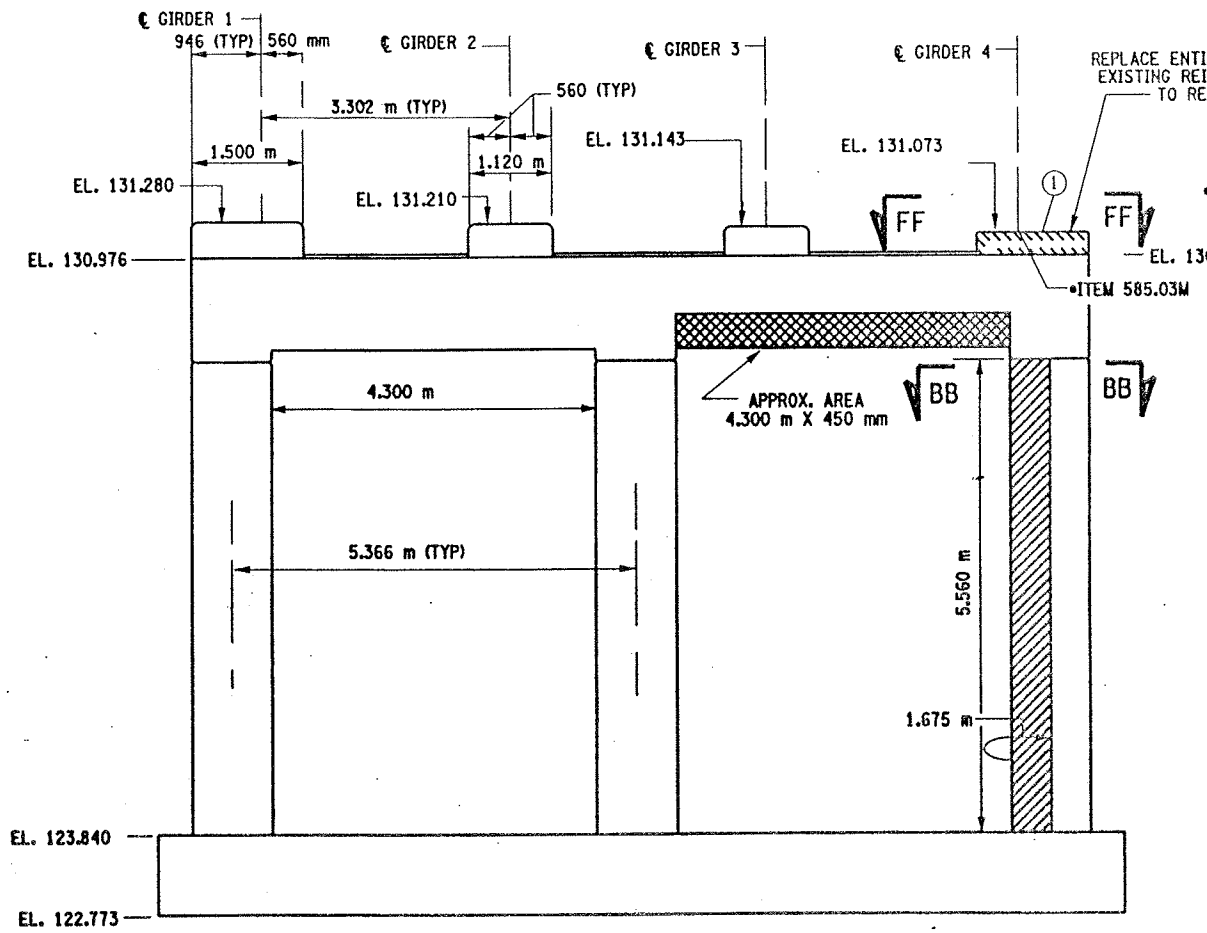

PIER 11 - FRONT FACE (LOOKING NORTH)
BIN 1093571

SCALE: 1 TO 50

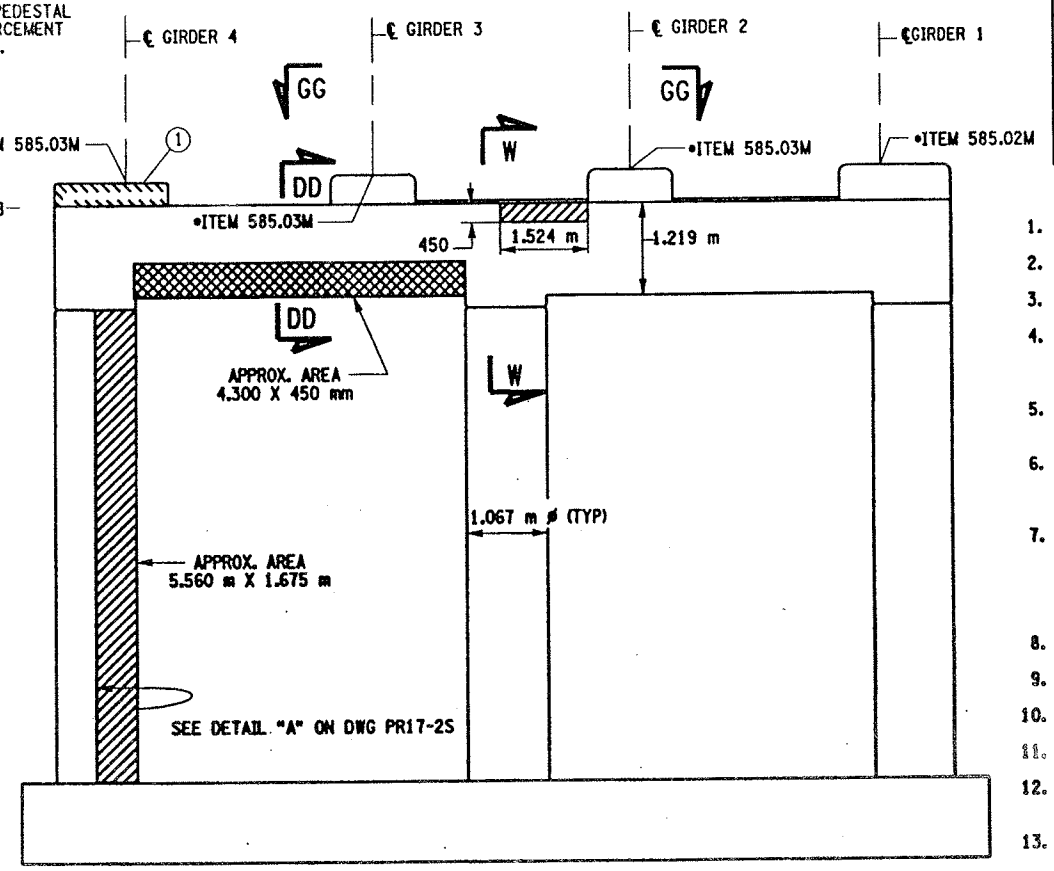

PIER 11 - BACK FACE (LOOKING SOUTH)
BIN 1093571

SCALE: 1 TO 50

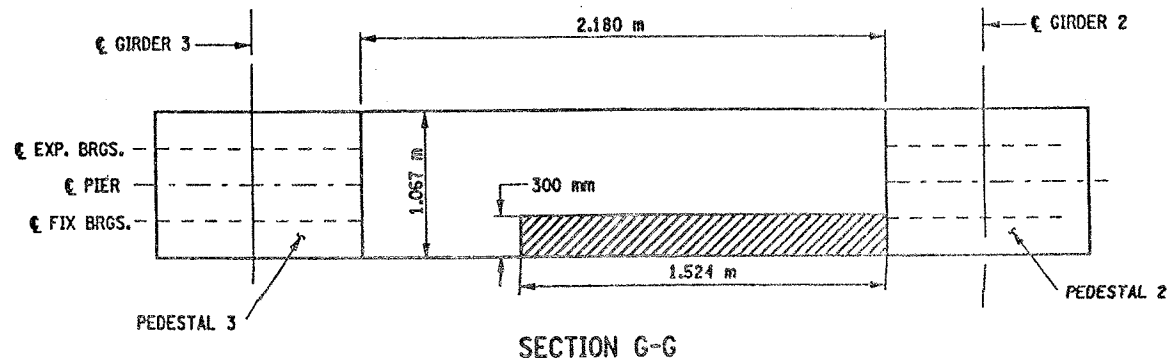

SECTION G-G
NOT TO SCALE

CONCRETE TABLE (m³)		
PLACEMENT	QUANTITY	ITEM NO.
1	0.49	555.0105M

① INDICATES CONCRETE PLACEMENT NUMBER

LIST OF ITEMS USED

ITEM 15565.4302M - BRIDGE BEARING RESTORATION (EA)
ITEM 555.0105M - CONCRETE FOR STRUCTURES, CLASS A (CM)
ITEM 580.01M - REMOVAL OF STRUCTURAL CONCRETE (CM)
ITEM 582.05M - REM. OF STRUC. CONC. - REPLACE WITH CLASS A CONCRETE (CM)
ITEM 582.07M - REM. OF STRUC. CONC. - REPL. W/ VERT. OVERHEAD PATCH MAT.L. (SM)
ITEM 585.02M - STRUCTURAL LIFTING OPERATIONS - TYPE B (EA)
ITEM 585.03M - STRUCTURAL LIFTING OPERATION - TYPE (EA)

FED ROAD REG. NO.	STATE	CONTRACT NO.	SHEET NO.	TOTAL SHEETS
1	N.Y.	D259214	311	432

BRIDGE REHABILITATION PROJECT (ELEMENT SPECIFIC)
VARIOUS BRIDGES ON INTERSTATE 481
TOWNS OF DEWITT AND CICERO
ONONDAGA COUNTY
P.I.N. 305613 B.I.N. 1093571

NOTES:

1. ALL REINFORCEMENT TO REMAIN.
2. RESTORE TO ORIGINAL DIMENSIONS.
3. PEDESTALS NUMERICALLY NUMBERED FROM WEST TO EAST.
4. FOR THE CONCRETE REPAIR AREAS, THE CONCRETE SHALL BE REMOVED TO AT LEAST 40mm MIN. BEYOND THE ENCOUNTERED REINFORCEMENT AND TO SOUND CONCRETE, A.O.B.E.
5. ELEVATIONS SHOWN ARE FROM ORIGINAL CONTRACT PLANS F.I.S.H. TO-7 AND ARE FOR REFERENCE ONLY.
6. REMOVAL DIMENSIONS SHOWN ON PLANS ARE ESTIMATED AND SHALL BE FIELD VERIFIED BY THE CONTRACTOR PRIOR TO BEGINNING OF REMOVAL OPERATIONS A.O.B.E.
7. PERFORM BEARING RESTORATION TO ALL EXPANSION BEARINGS (TO INCLUDE RESETTING OF UNDEREXTENDED OR OVEREXTENDED BEARINGS). SEE DWG. PR17-1S FOR BEARING RESTORATION NOTES. SEE DWG. BR-10 & BR-11 FOR BEARING RESTORATION DETAILS.
8. SEE DWG. PR17-12S FOR SECTION BB-BB.
9. SEE DWG PR17-10N FOR SECTION DD-DD.
10. SEE DWG PR17-11N FOR SECTION FF-FF.
11. SEE DWG. PR17-11S FOR SECTION W-W.
12. PEDESTAL 4 SHALL BE REPLACED TO EXISITING DIMENSIONS, ITEM 555.0105 M.
13. ALL CONCRETE REMOVAL SHALL BE SAWCUT TO PRODUCE NEAT REMOVAL LINES. COST TO BE INCLUDED IN THE PRICE BID FOR ITEM 582.05M AND ITEM 582.07M.
14. FOR JACKING NOTES SEE DWG. PR17-1S

• PERFORM STRUCTURAL LIFTING UNDER ITEM 585.02M - STRUCTURAL LIFTING OPERATIONS - TYPE B (LIFTING AT A PIER) OR ITEM 585.03M - STRUCTURAL LIFTING OPERATIONS - TYPE C (LIFTING AT A PIER WHERE THE CONTRACTOR SHALL BE REQUIRED TO LIFT OFF THE FOOTING AND/OR GROUND LEVEL.

JACKING LOADS:

D.L. = 75 MT
L.L. = 50 MT
TOTAL = 125 MT

LEGEND:

ITEM 582.05M - REMOVAL OF STRUCTURAL CONCRETE- REPLACE WITH CLASS A CONCRETE. (CM)

ITEM 582.07M - REMOVAL OF STRUCTURAL CONCRETE - REPLACE WITH VERTICAL OVERHEAD PATCH MATERIAL. (SM)

ITEM 580.01 M - REMOVAL OF STRUCTURAL CONCRETE. (CM) AND ITEM 555.0105 M - CONCRETE FOR STRUCTURES CLASS A. (CM)

ALL DIMENSIONS ARE IN mm UNLESS OTHERWISE NOTED

AS BUILT REVISIONS

SIGNATURE DATE

INTERSTATE 481 SB
OVER
CSX RAILROAD YARD
PIER 11

STATE OF NEW YORK
DEPARTMENT OF TRANSPORTATION

FILENAME	REGION	DATE	DRAWING NO.
305613AE.P11	3	10/02	PR17-15S

DESIGN SUPERVISOR ____ JOB MANAGER ____ DESIGNED BY ____ DRAFTED BY ____ CHECKED BY ____ ESTIMATED BY ____

FED ROAD REG. NO.	STATE	CONTRACT NO.	SHEET NO.	TOTAL SHEETS
1	N.Y.	D259214	314	432

BRIDGE REHABILITATION PROJECT (ELEMENT SPECIFIC)
VARIOUS BRIDGES ON INTERSTATE 481
TOWNS OF DEWITT AND CICERO
ONONDAGA COUNTY
P.I.N. 305613 B.I.N. 1093571

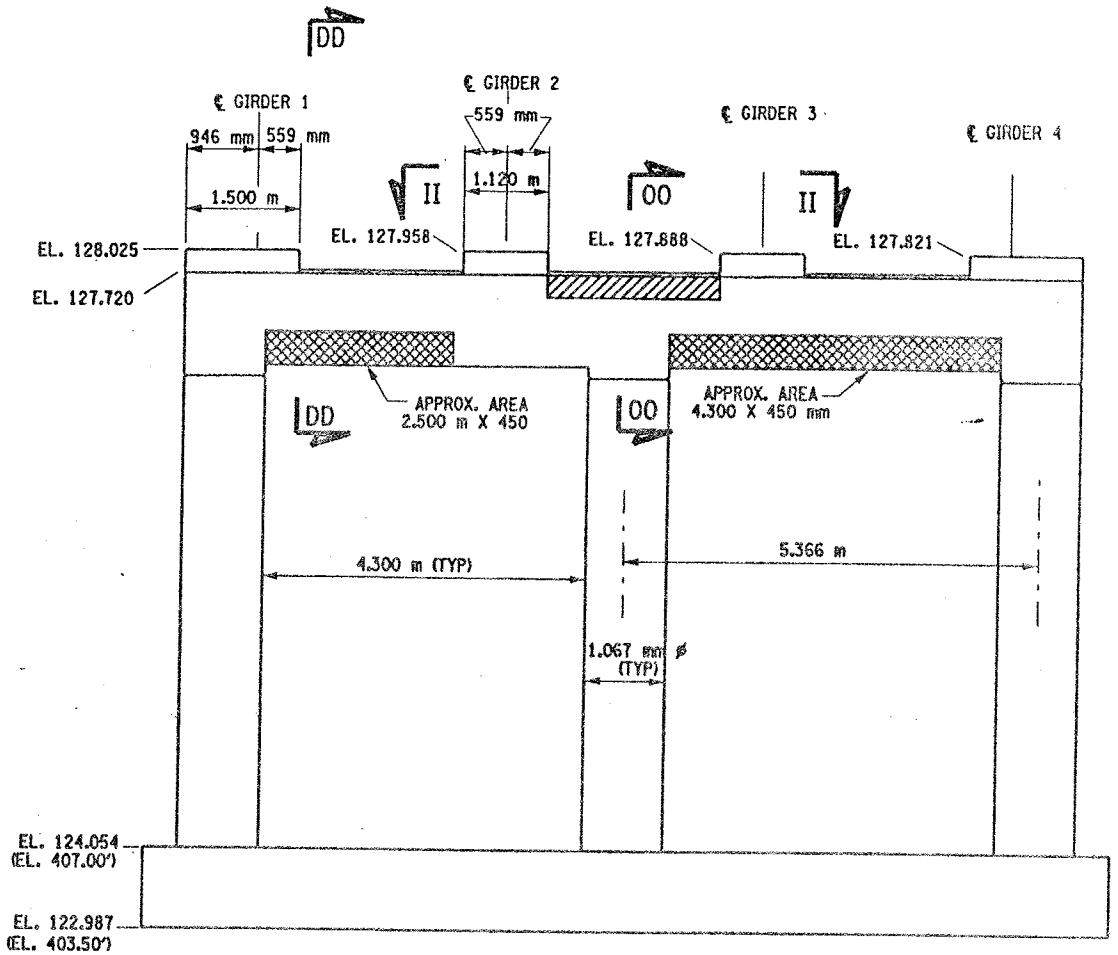

PIER 14 - FRONT FACE (LOOKING NORTH)
BIN 1093571
SCALE: 1 TO 50

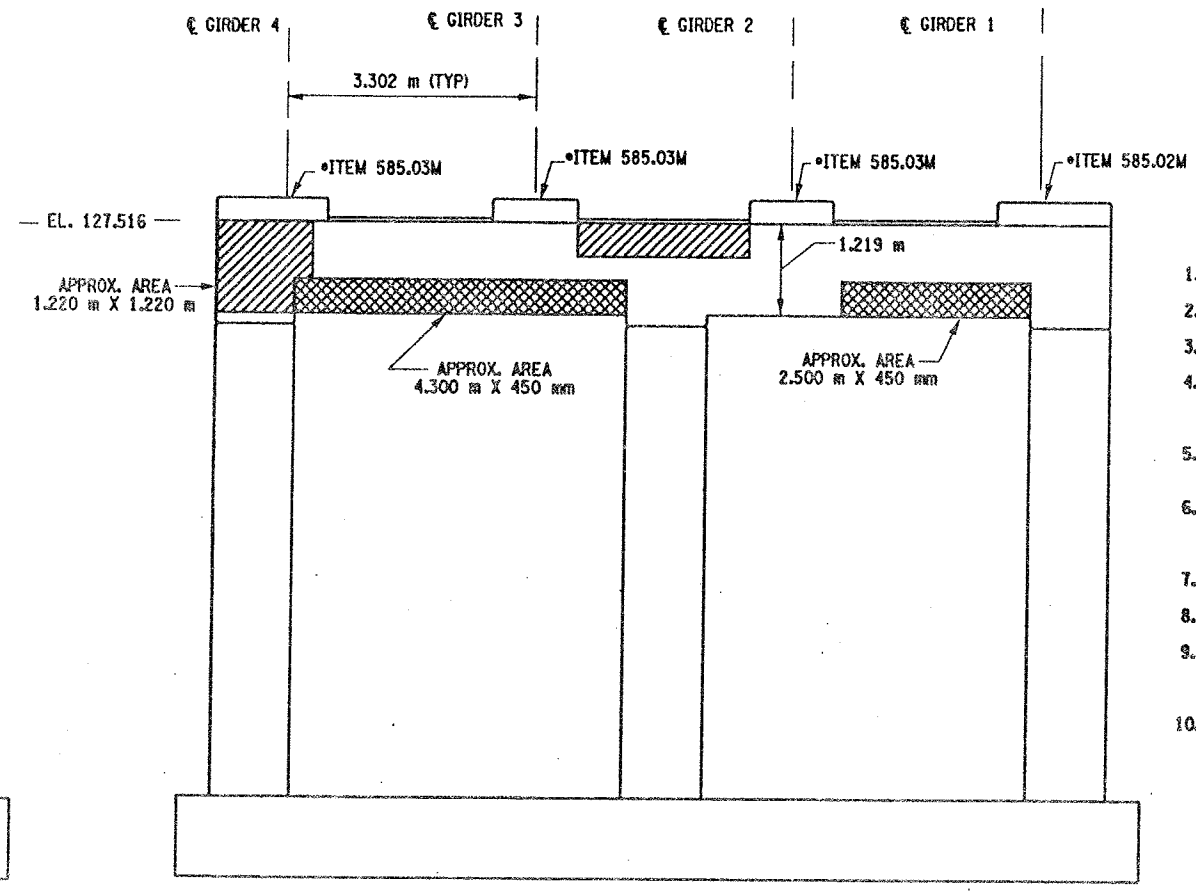

PIER 14 - BACK FACE (LOOKING SOUTH)
BIN 1093571
SCALE: 1 TO 50

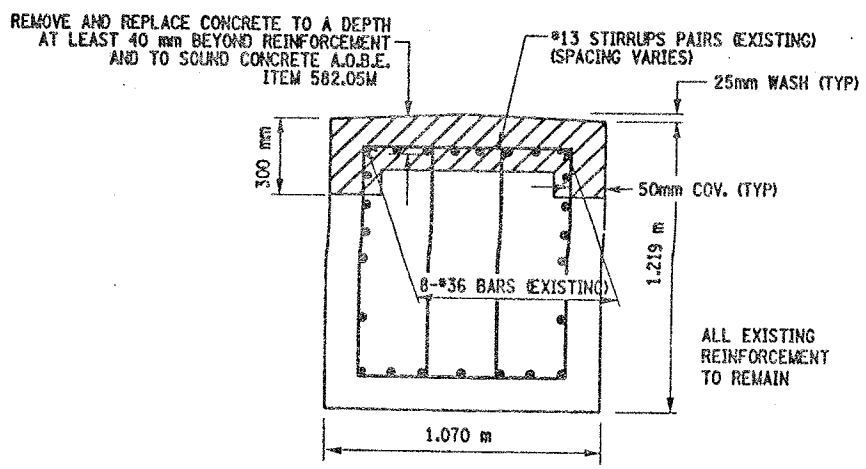

SECTION 00-00
NOT TO SCALE

NOTES:

1. ALL REINFORCEMENT TO REMAIN.
2. RESTORE TO ORIGINAL DIMENSIONS.
3. PEDESTALS NUMERICALLY NUMBERED FROM WEST TO EAST.
4. FOR THE CONCRETE REPAIR AREAS, THE CONCRETE SHALL BE REMOVED TO AT LEAST 40mm MIN. BEYOND THE ENCOUNTERED REINFORCEMENT AND TO SOUND CONCRETE, A.O.B.E.
5. ELEVATIONS SHOWN ARE FROM ORIGINAL CONTRACT PLANS F.I.S.H. 70-7 AND ARE FOR REFERENCE ONLY.
6. REMOVAL DIMENSIONS SHOWN ON PLANS ARE ESTIMATED AND SHALL BE FIELD VERIFIED BY THE CONTRACTOR PRIOR TO BEGINNING OF REMOVAL OPERATIONS A.O.B.E.
7. SEE DWG. PR17-10N FOR SECTION DD-DD.
8. SEE DWG. PR17-16S FOR SECTION II-II.
9. ALL CONCRETE REMOVAL SHALL BE SAWCUT TO PRODUCE NEAT REMOVAL LINES. COST TO BE INCLUDED IN THE PRICE BID FOR ITEM 582.05M AND 582.07M.
10. FOR JACKING NOTES SEE DWG PR17-1S.

• PERFORM STRUCTURAL LIFTING UNDER ITEM 585.02M - STRUCTURAL LIFTING OPERATIONS - TYPE B (LIFTING AT A PIER) OR ITEM 585.03M - STRUCTURAL LIFTING OPERATIONS - TYPE C (LIFTING AT A PIER WHERE THE CONTRACTOR SHALL BE REQUIRED TO LIFT OFF THE FOOTING AND/OR GROUND LEVEL.

JACKING LOADS:

D.L. = 75 MT
L.L. = 50 MT
TOTAL = 125 MT

LEGEND:

ITEM 582.05M - REMOVAL OF STRUCTURAL CONCRETE- REPLACE WITH CLASS A CONCRETE. (CM)

ITEM 582.07M - REMOVAL OF STRUCTURAL CONCRETE - REPLACE WITH VERTICAL OVERHEAD PATCH MATERIAL. (SM)

LIST OF ITEMS USED:

ITEM 582.05M - REM. OF STRUC. CONC. - REPLACE WITH CLASS A CONCRETE (CM)
ITEM 582.07M - REM. OF STRUC. CONC. - REPL. W/ VERT. OVERHEAD PATCH MAT'L (SM)
ITEM 585.02M - STRUCTURAL LIFTING OPERATIONS - TYPE B (EA)
ITEM 585.03M - STRUCTURAL LIFTING OPERATION - TYPE C (EA)

ALL DIMENSIONS ARE IN mm UNLESS OTHERWISE NOTED

AS BUILT REVISIONS

SIGNATURE DATE

INTERSTATE 481 SB
OVER
CSX RAILROAD YARD
PIER 14

STATE OF NEW YORK
DEPARTMENT OF TRANSPORTATION

FILENAME	REGION	DATE	DRAWING NO.
305613AE.P14	3	10/02	PR17-18S

DESIGN SUPERVISOR ____ JOB MANAGER ____ DESIGNED BY ____ DRAFTED BY ____ ESTIMATED BY ____ CHECKED BY ____

FED ROAD REG. NO.	STATE	CONTRACT NO.	SHEET NO.	TOTAL SHEETS
1	N.Y.	D259214	315	432

BRIDGE REHABILITATION PROJECT (ELEMENT SPECIFIC)
VARIOUS BRIDGES ON INTERSTATE 481
TOWN OF DEWITT AND CICERO
ONONDAGA COUNTY
P.I.N. 305613 B.I.N. 1093572

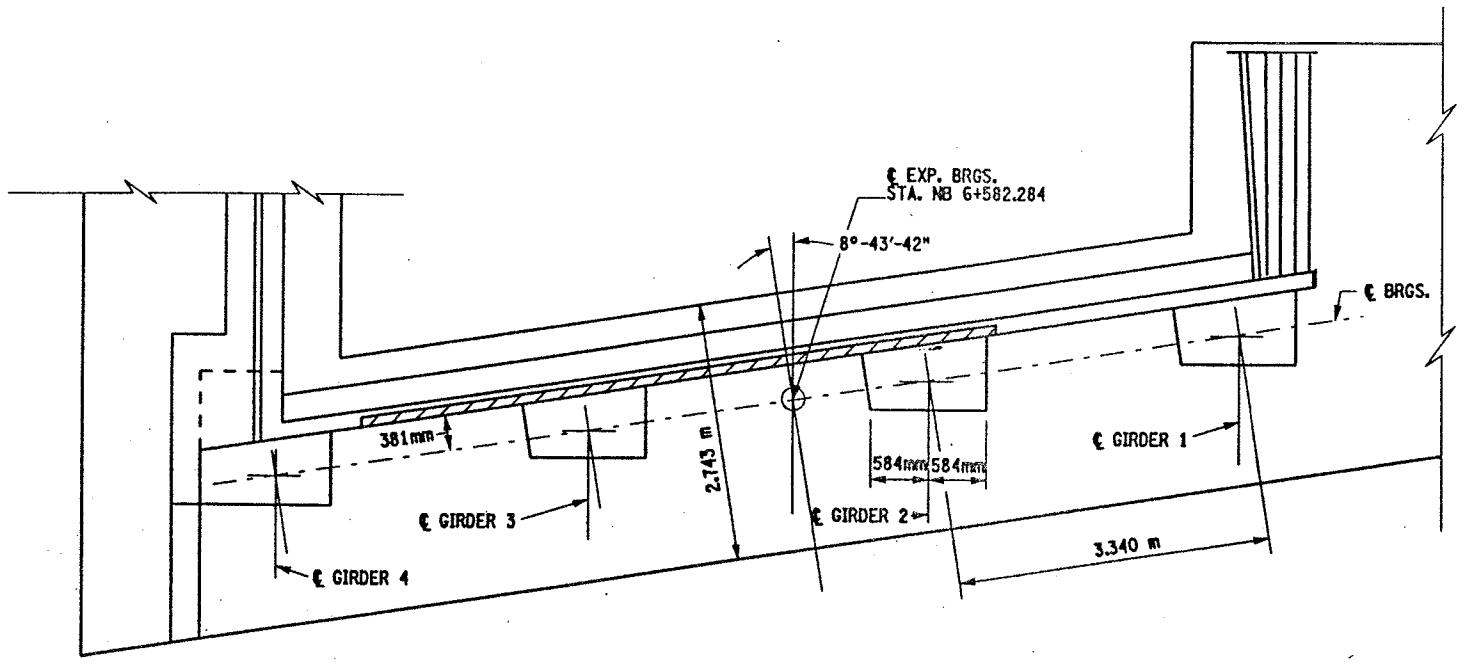

SOUTH ABUTMENT
PLAN

SCALE 1:40

NOTES:

1. ALL DIMENSIONS SHOWN FOR CONCRETE REMOVAL ARE APPROXIMATE AND SHALL BE FIELD VERIFIED BY THE CONTRACTOR AND EIC.
2. REMOVE CONCRETE TO LIMITS SHOWN AS WELL AS TO SOUND CONCRETE, A.O.B.E.
3. WHEN REMOVING EXISTING CONCRETE, SAWCUT 5 mm MIN. TO PRODUCE NEAT REMOVAL LINES. ANY COST TO BE
4. INCLUDED IN THE BID PRICE FOR ITEM 582.05M.
5. ALL EXISTING REINFORCEMENT TO REMAIN.
6. ELEVATIONS ARE GIVEN FOR QUANTITY ESTIMATES ONLY.
7. REFER TO CONTRACT D250094 FOR ORIGINAL CONSTRUCTION DETAILS.

AREAS OF PROPOSED WORK: ITEM 582.05M
REMOVAL OF STRUCTURAL CONCRETE-
REPLACEMENT WITH CLASS A CONCRETE (CM)

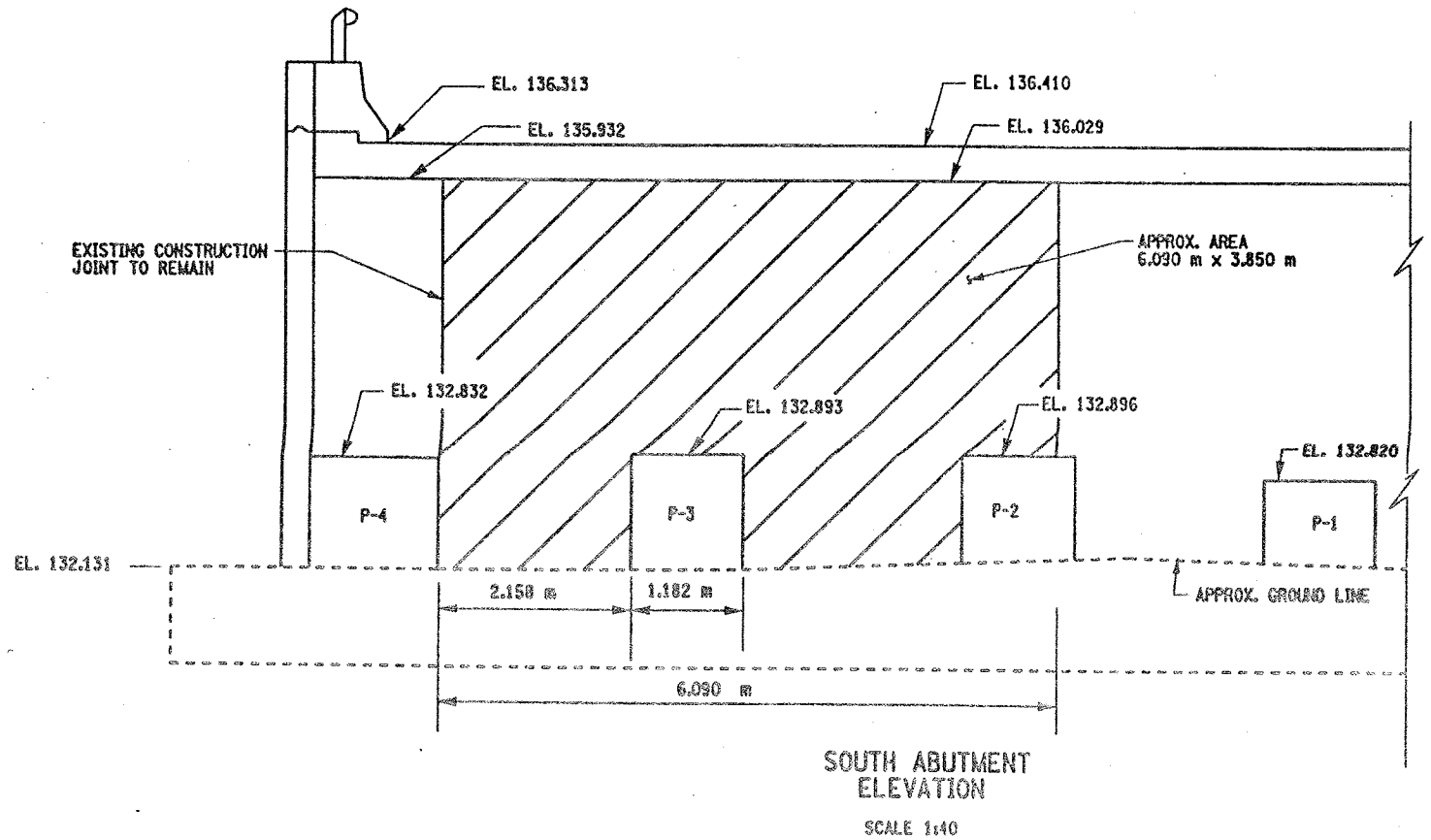

SOUTH ABUTMENT
ELEVATION

SCALE 1:40

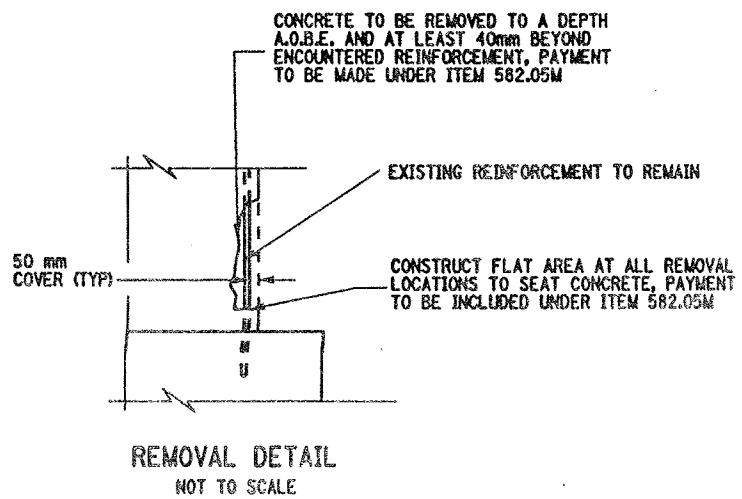

REMOVAL DETAIL
NOT TO SCALE

LIST OF ITEMS USED:

ITEM 582.05M - REMOVE STRUCTURAL CONCRETE WITH CLASS A CONCRETE (CM)

ALL DIMENSIONS ARE IN m UNLESS OTHERWISE NOTED

AS BUILT REVISIONS

SIGNATURE DATE

INTERSTATE 481 NB
OVER
CSX RAILROAD
SOUTH ABUTMENT

STATE OF NEW YORK
DEPARTMENT OF TRANSPORTATION

FILENAME	REGION	DATE	DRAWING NO.
305613AE.A1B	3	10/02	AB17-1

DESIGNED BY ____ CHECKED BY ____
DRAFTED BY ____ CHECKED BY ____
ESTIMATED BY ____
JOB MANAGER ____
DESIGN SUPERVISOR ____

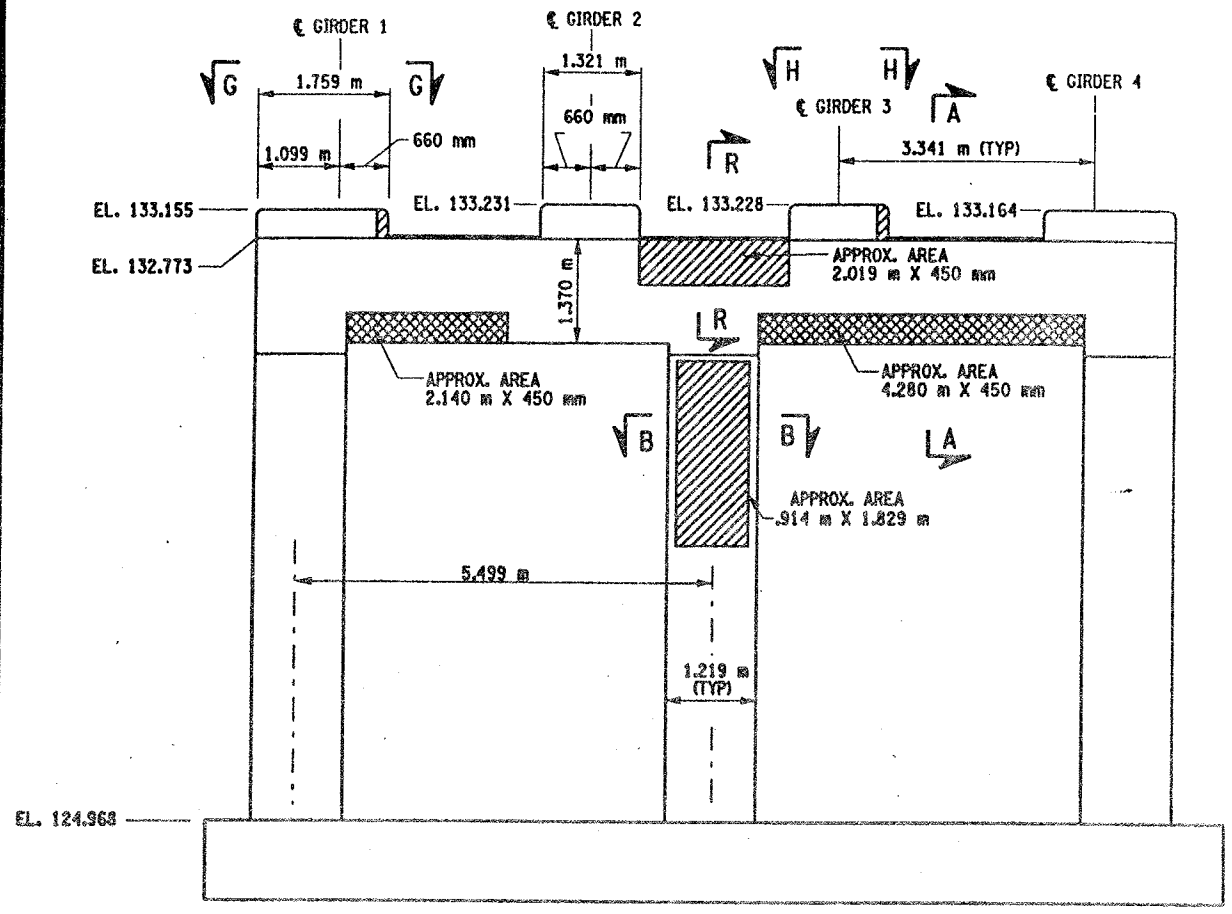

PIER 1 - FRONT FACE (LOOKING NORTH)

BIN 1093572

SCALE: 1 TO 50

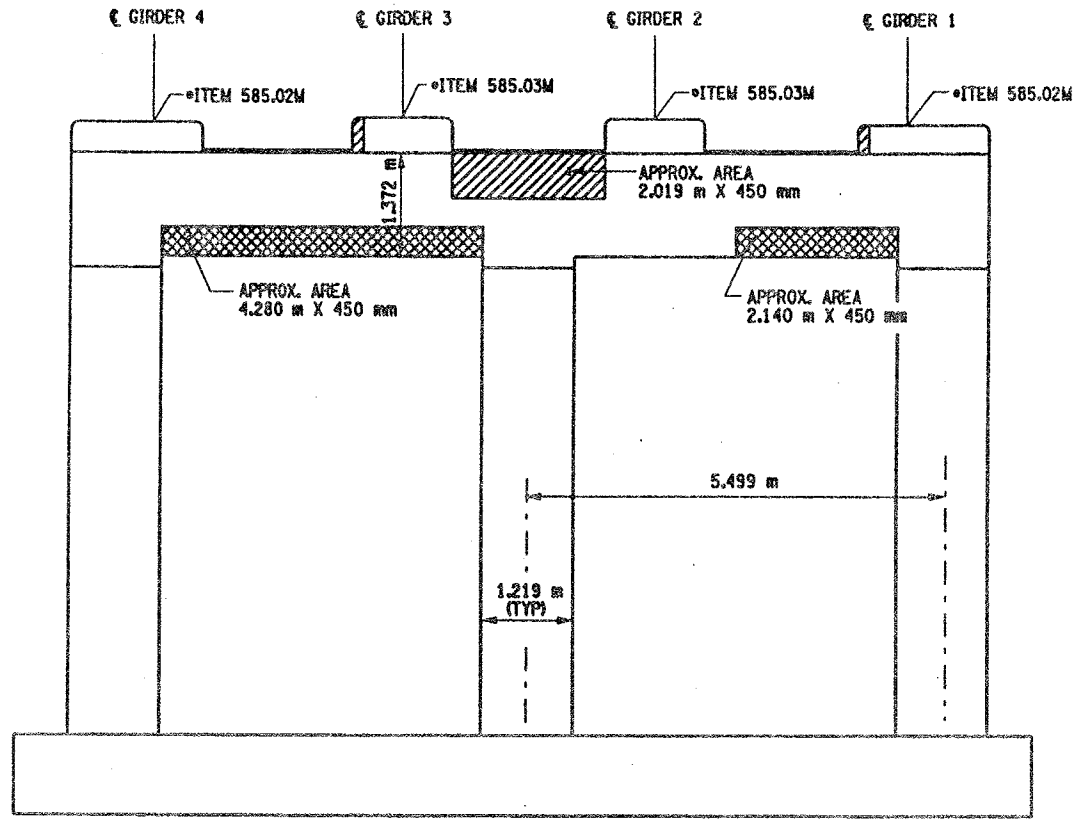

PIER 1- BACK FACE (LOOKING SOUTH)

BIN 1093572

SCALE: 1 TO 50

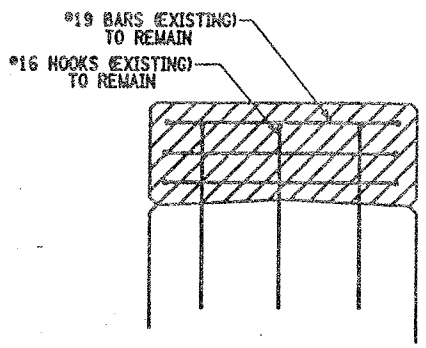

SECTION I-I

NOT TO SCALE

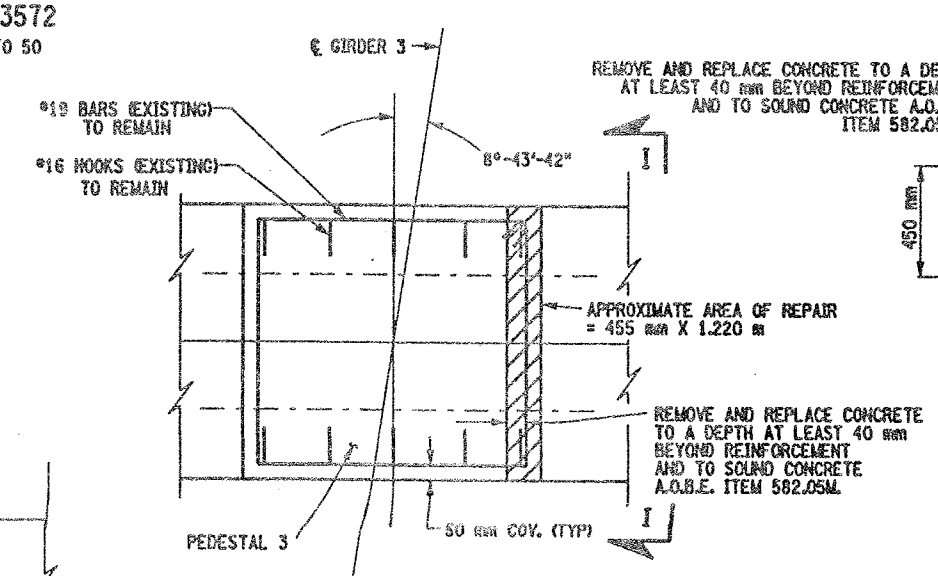

SECTION H-H

NOT TO SCALE

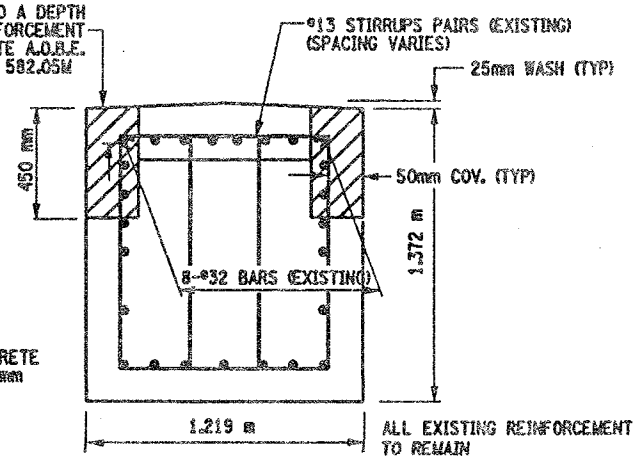

SECTION R-R

NOT TO SCALE

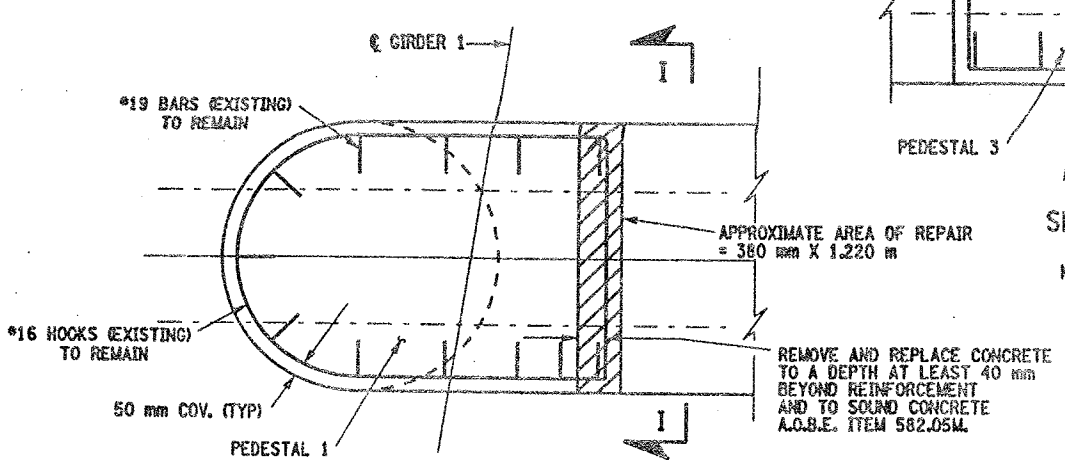

SECTION G-G

NOT TO SCALE

LIST OF ITEMS USED:

ITEM 15565.4302 - BRIDGE BEARING RESTORATION
ITEM 582.05M - REM. OF STRUC. CONC. - REPLACE WITH CLASS A CONCRETE (CM)
ITEM 582.07M - REM. OF STRUC. CONC. - REPL. W/ VERT. OVERHEAD PATCH MAT'L. (SM)
ITEM 585.02M - STRUCTURAL LIFTING OPERATIONS - TYPE B (EA)
ITEM 585.03M - STRUCTURAL LIFTING OPERATION - TYPE C (EA)

FED ROAD REG. NO.	STATE	CONTRACT NO.	SHEET NO.	TOTAL SHEETS
1	N.Y.	D259214	316	432

BRIDGE REHABILITATION PROJECT (ELEMENT SPECIFIC)

VARIOUS BRIDGES ON INTERSTATE 481

TOWNS OF DEWITT AND CICERO

ONONDAGA COUNTY

P.I.N. 305613 | B.I.N. 1093572

NOTES:

1. ALL REINFORCEMENT TO REMAIN.
2. RESTORE TO ORIGINAL DIMENSIONS.
3. PEDESTALS NUMERICALLY NUMBERED FROM WEST TO EAST.
4. FOR THE CONCRETE REPAIR AREAS, THE CONCRETE SHALL BE REMOVED TO AT LEAST 40mm MIN. BEYOND THE ENCOUNTERED REINFORCEMENT AND TO SOUND CONCRETE, A.O.B.E.
5. ELEVATIONS SHOWN ARE FROM ORIGINAL CONTRACT PLANS F.I.S.H. 70-7 AND ARE FOR REFERENCE ONLY.
6. REMOVAL DIMENSIONS SHOWN ON PLANS ARE ESTIMATED AND SHALL BE FIELD VERIFIED BY THE CONTRACTOR PRIOR TO BEGINNING OF REMOVAL OPERATIONS A.O.B.E.
7. PERFORM BEARING RESTORATION TO ALL EXPANSION BEARINGS (TO INCLUDE RESETTING OF UNDEREXTENDED OR OVEREXTENDED BEARINGS). SEE DWG. BR-10 & BR-11 FOR BEARING RESTORATION DETAILS. SEE DWG. PR17-1S FOR BEARING RESTORATION NOTES.
8. FOR SECTION A-A AND B-B SEE DWG. PR17-2S.
9. ALL CONCRETE REMOVAL SHALL BE SAWCUT TO PRODUCE NEAT REMOVAL LINES. COST TO BE INCLUDED IN THE PRICE BID FOR ITEM 582.05M AND ITEM 582.07M
10. CONTRACTOR SHALL REMOVE DEBRIS FROM TOP OF PEDESTALS AND TOP OF CAP BEAM. COST TO BE INCLUDED IN THE PRICE BID FOR VARIOUS OTHER ITEMS OF CONTRACT.
11. FOR JACKING NOTES SEE DWG. PR17-1S.

• PERFORM STRUCTURAL LIFTING UNDER ITEM 585.02M - STRUCTURAL LIFTING OPERATIONS - TYPE B (LIFTING AT A PIER) OR ITEM 585.03M - STRUCTURAL LIFTING OPERATIONS - TYPE C (LIFTING AT A PIER WHERE THE CONTRACTOR SHALL BE REQUIRED TO LIFT OFF THE FOOTING AND/OR GROUND LEVEL.

JACKING LOADS:

D.L. = 75 MT
L.L. = 50 MT
TOTAL = 125 MT

LEGEND:

ITEM 582.05M - REMOVAL OF STRUCTURAL CONCRETE- REPLACE WITH CLASS A CONCRETE (CM)

ITEM 582.07M - REMOVAL OF STRUCTURAL CONCRETE - REPLACE WITH VERTICAL OVERHEAD PATCH MATERIAL. (SM)

ALL DIMENSIONS ARE IN mm UNLESS OTHERWISE NOTED

AS BUILT REVISIONS

SIGNATURE DATE

INTERSTATE 481 NB
OVER
CSX RAILROAD YARD
PIER 1

STATE OF NEW YORK
DEPARTMENT OF TRANSPORTATION

FILENAME	REGION	DATE	DRAWING NO.
305613AE.P1A	3	10/02	PR17-1N

ESTIMATED BY ____ DRAFTED BY ____ CHECKED BY ____

DESIGN SUPERVISOR ____ JOB MANAGER ____ DESIGNED BY ____

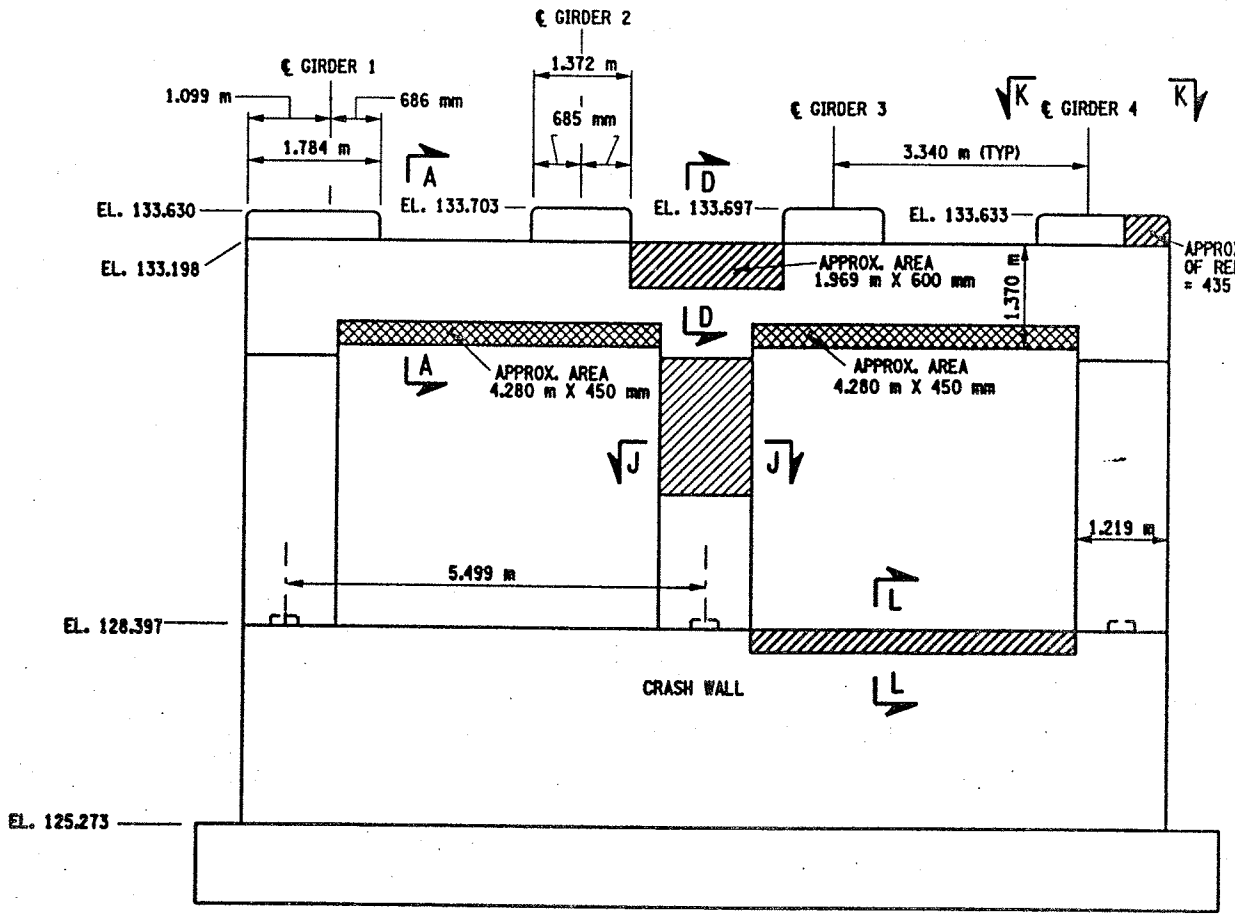

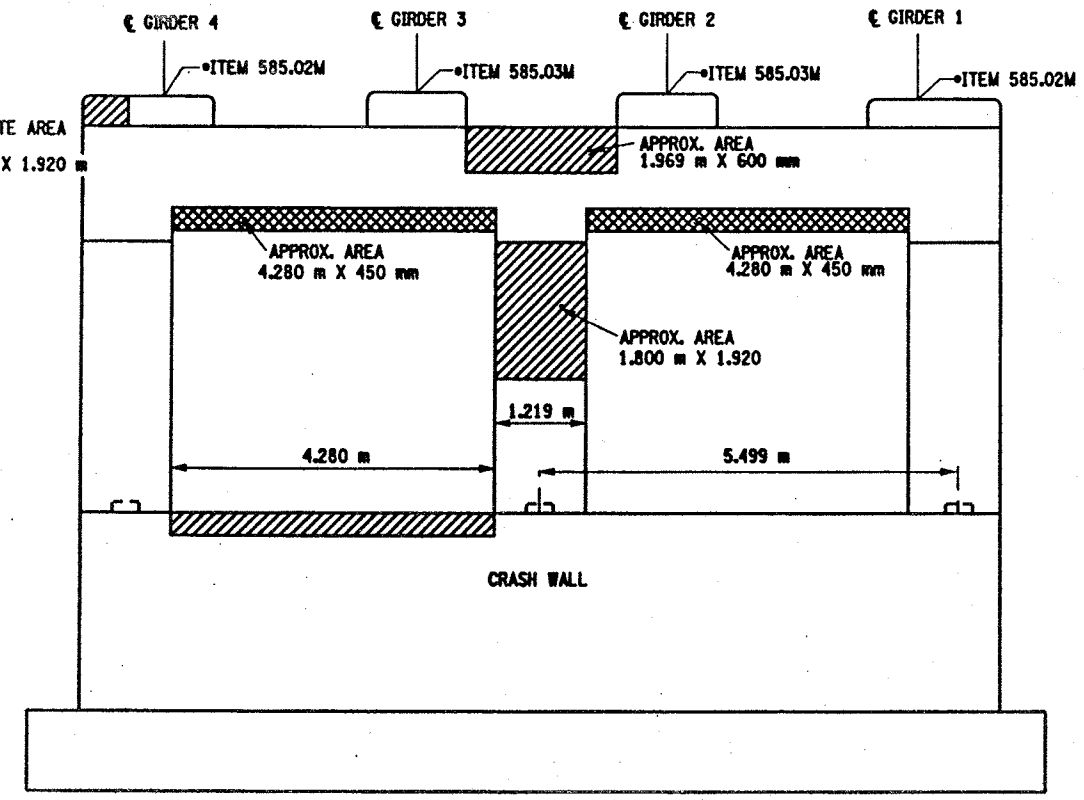

FED ROAD REG. NO.	STATE	CONTRACT NO.	SHEET NO.	TOTAL SHEETS
1	N.Y.	D259214	317	432

BRIDGE REHABILITAITON PROJECT (ELEMENT SPECIFIC)
VARIOUS BRIDGES ON INTERSTATE 481
TOWNS OF DEWITT AND CICERO
ONONDAGA COUNTY
P.I.N. 305613 B.I.N. 1093572

NOTES:

1. ALL REINFORCEMENT TO REMAIN.
2. RESTORE TO ORIGINAL DIMENSIONS.
3. PEDESTALS NUMERICALLY NUMBERED FROM WEST TO EAST.
4. FOR THE CONCRETE REPAIR AREAS, THE CONCRETE SHALL BE REMOVED TO AT LEAST 40mm MIN. BEYOND THE ENCOUNTERED REINFORCEMENT AND TO SOUND CONCRETE, A.O.B.E.
5. ELEVATIONS SHOWN ARE FROM ORIGINAL CONTRACT PLANS F.I.S.H. 70-7 AND ARE FOR REFERENCE ONLY.
6. REMOVAL DIMENSIONS SHOWN ON PLANS ARE ESTIMATED AND SHALL BE FIELD VERIFIED BY THE CONTRACTOR PRIOR TO BEGINNING OF REMOVAL OPERATIONS A.O.B.E.
7. PERFORM BEARING RESTORATION TO ALL EXPANSION BEARINGS (TO INCLUDE RESETTING OF UNDEREXTENDED OR OVEREXTENDED BEARINGS). SEE DWG. BR-10 & BR-11 FOR BEARING RESTORATION DETAILS. SEE DWG PR17-1S FOR BEARING RESTORATION NOTES.
8. SEE DWG. PR17-2S FOR SECTION A-A, D-D AND DETAIL "A".
9. ALL CONCRETE REMOVAL SHALL BE SAWCUT TO PRODUCE NEAT REMOVAL LINES. COST TO BE INCLUDED IN THE PROCE BID FOR ITEM 582.05M AND ITEM 582.07M.
10. FOR JACKING NOTES SEE DWG. PR17-1S
11. CONTRACTOR SHALL REMOVE DEBRIS FROM TOP OF PEDESTALS AND TOP OF CAP BEAM. COST TO BE INCLUDED IN THE PRICE BID FOR VARIOUS OTHER ITEMS OF CONTRACT.

PIER 2 - FRONT FACE (LOOKING NORTH)
BIN 1093572
SCALE: 1 TO 50

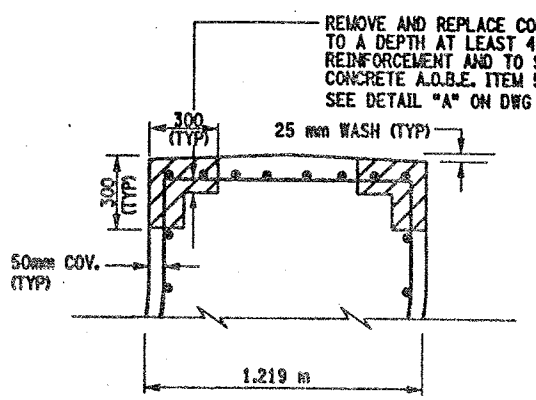

ALL EXISTING REINFORCEMENT TO REMAIN

SECTION L-L
NOT TO SCALE

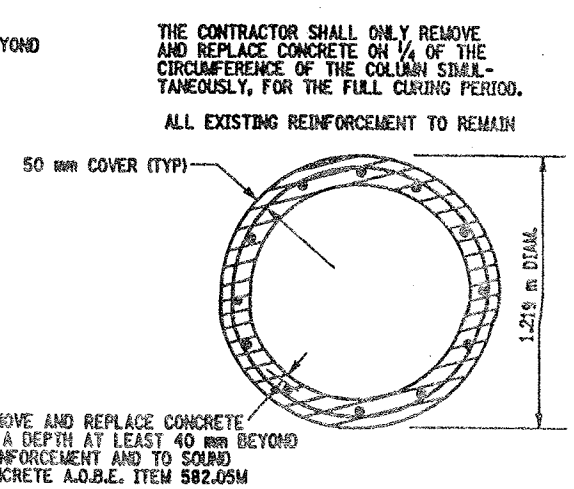

SECTION J-J
NOT TO SCALE

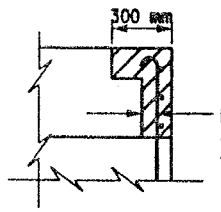

SECTION M-M
NOT TO SCALE

PIER 2- BACK FACE (LOOKING SOUTH)
BIN 1093572
SCALE: 1 TO 50

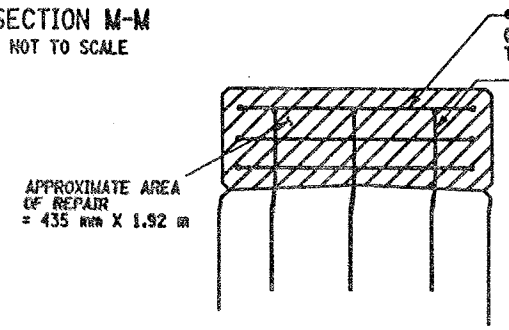

SECTION N-N
NOT TO SCALE

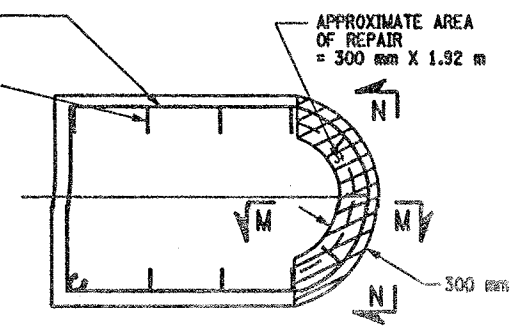

SECTION K-K
NOT TO SCALE

LIST OF ITEMS USED:

ITEM 15565.4302M - BRIDGE BEARING RESTORATION (EA)
ITEM 582.05M - REM. OF STRUC. CONC. - REPLACE WITH CLASS A CONCRETE (CM)
ITEM 582.07M - REM. OF STRUC. CONC. - REPL. W/ VERT. OVERHEAD PATCH MAT'L (SM)
ITEM 585.02M - STRUCTURAL LIFTING OPERATIONS - TYPE B (EA)
ITEM 585.03M - STRUCTURAL LIFTING OPERATION - TYPE C (EA)

• PERFORM STRUCTURAL LIFTING UNDER ITEM 585.02M - STRUCTURAL LIFTING OPERATIONS - TYPE B (LIFTING AT A PIER) OR ITEM 585.03M - STRUCTURAL LIFTING OPERATIONS - TYPE C (LIFTING AT A PIER WHERE THE CONTRACTOR SHALL BE REQUIRED TO LIFT OFF THE FOOTING AND/OR GROUND LEVEL.

JACKING LOADS:

D.L. = 75 MT
L.L. = 50 MT
TOTAL = 125 MT

LEGEND:

ITEM 582.05M - REMOVAL OF STRUCTURAL CONCRETE- REPLACE WITH CLASS A CONCRETE (CM)

ITEM 582.07M - REMOVAL OF STRUCTURAL CONCRETE - REPLACE WITH VERTICAL OVERHEAD PATCH MATERIAL. (SM)

ALL DIMENSIONS ARE IN mm UNLESS OTHERWISE NOTED

AS BUILT REVISIONS

SIGNATURE DATE

INTERSTATE 481 NB
OVER
CSX RAILROAD YARD
PIER 2

STATE OF NEW YORK
DEPARTMENT OF TRANSPORTATION

FILENAME	REGION	DATE	DRAWING NO.
305613AE_P2A	3	10/02	PR17-2N

DESIGNED BY ____ CHECKED BY ____
DRAFTED BY ____ CHECKED BY ____
ESTIMATED BY ____
JOB MANAGER ____
DESIGN SUPERVISOR ____

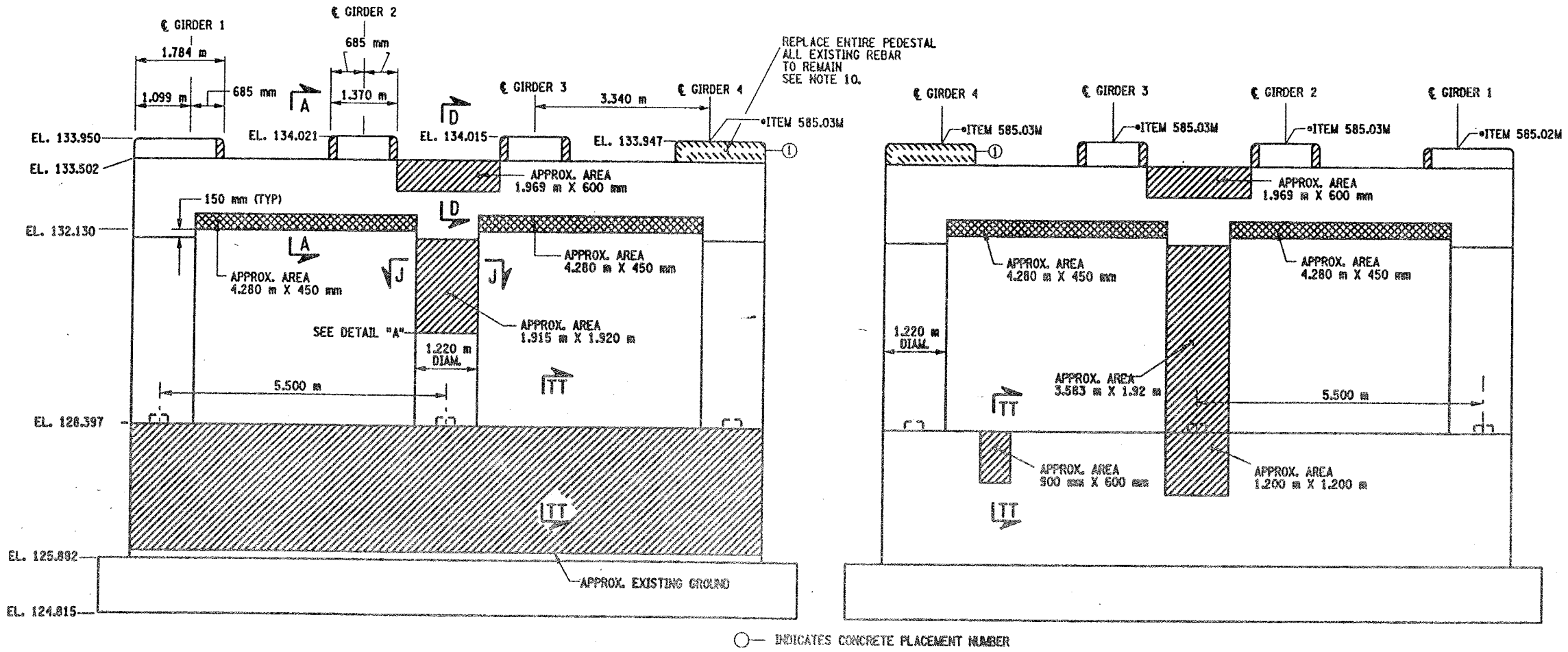

○— INDICATES CONCRETE PLACEMENT NUMBER

PIER 3 - FRONT FACE (LOOKING NORTH)

BIN 1093572

SCALE: 1 TO 50

PIER 3 - BACK FACE (LOOKING SOUTH)

BIN 1093572

SCALE: 1 TO 50

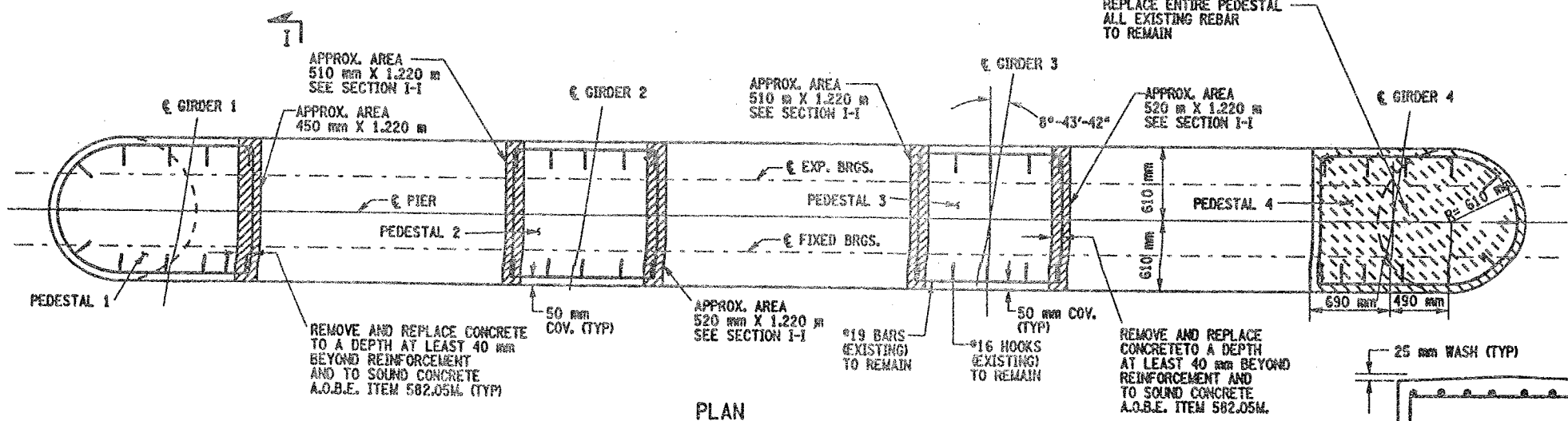

PLAN

SCALE: 1 TO 25

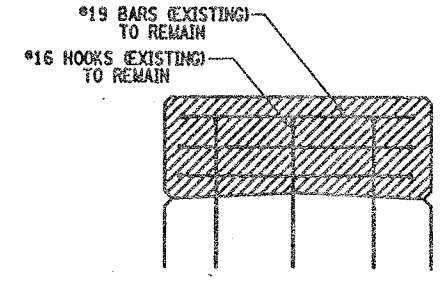

SECTION I-I

NOT TO SCALE

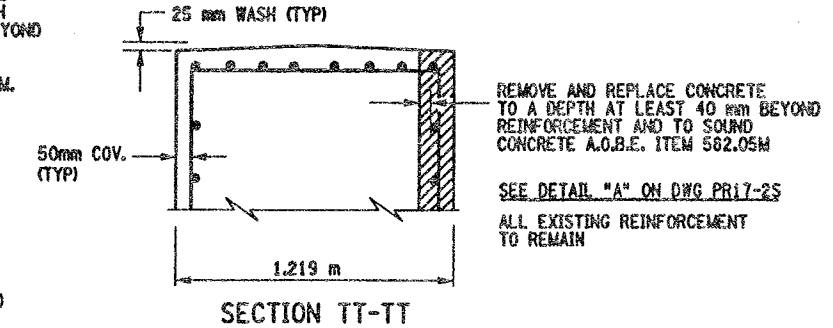

SECTION TT-TT

NOT TO SCALE

CONCRETE TABLE (m³)		
PLACEMENT	QUANTITY	ITEM NO.
1	0.90	555.0105M

LIST OF ITEMS USED:

ITEM 15565.4302M - BRIDGE BEARING RESTORATION (EA)
ITEM 555.0105M - CONCRETE FOR STRUCTURES CLASS A (CM)
ITEM 580.01M - REMOVAL OF STRUCTURAL CONCRETE (CM)
ITEM 582.05M - REM. OF STRUC. CONC. - REPLACE WITH CLASS A CONCRETE (CM)
ITEM 582.07M - REM. OF STRUC. CONC. - REPL. W/ VERT. OVERHEAD PATCH MAT.L (SM)
ITEM 585.02M - STRUCTURAL LIFTING OPERATIONS - TYPE B (EA)
ITEM 585.03M - STRUCTURAL LIFTING OPERATION - TYPE C (EA)

FED ROAD REG. NO.	STATE	CONTRACT NO.	SHEET NO.	TOTAL SHEETS
1	N.Y.	D259214	318	432

BRIDGE REHABILITATION PROJECT (ELEMENT SPECIFIC)

VARIOUS BRIDGES ON INTERSTATE 481

TOWNS OF DEWITT AND CICERO

ONONDAGA COUNTY

P.I.N. 305613 | B.I.N. 1093572

NOTES:

1. ALL REINFORCEMENT TO REMAIN.
2. RESTORE TO ORIGINAL DIMENSIONS.
3. PEDESTALS NUMERICALLY NUMBERED FROM WEST TO EAST.
4. FOR THE CONCRETE REPAIR AREAS, THE CONCRETE SHALL BE REMOVED TO AT LEAST 40mm MIN. BEYOND THE ENCOUNTERED REINFORCEMENT AND TO SOUND CONCRETE, A.O.B.E.
5. ELEVATIONS SHOWN ARE FROM ORIGINAL CONTRACT PLANS F.I.S.H. 70-7 AND ARE FOR REFERENCE ONLY.
6. REMOVAL DIMENSIONS SHOWN ON PLANS ARE ESTIMATED AND SHALL BE FIELD VERIFIED BY THE CONTRACTOR PRIOR TO BEGINNING OF REMOVAL OPERATIONS A.O.B.E.
7. PERFORM BEARING RESTORATION TO ALL EXPANSION BEARINGS (TO INCLUDE RESETTING OF UNDEREXTENDED OR OVEREXTENDED BEARINGS). SEE DWG BR-10 & BR-11 FOR BEARING RESTORATION DETAILS. SEE DWG. PR17-1S FOR BEARING RESTORATION NOTES.
8. SEE DWG. PR17-2S FOR SECTIONS A-A, D-D AND DETAIL "A"
9. SEE DWG. PR17-2N FOR SECTION J-J
10. PEDESTAL 4 SHALL BE REPLACED TO EXISTING DIMENSIONS. ITEM 555.0105 M
11. ALL CONCRETE REMOVAL SHALL BE SAWCUT TO PRODUCE NEAT REMOVAL LINES. COST TO BE INCLUDED IN THE PRICE BID FOR ITEM 582.05M AND ITEM 582.07M.
12. FOR JACKING NOTES SEE DWG. PR17-1S
13. CONTRACTOR SHALL REMOVE DEBRIS FROM TOP OF PEDESTALS AND TOP OF CAPBEAM. COST TO BE INCLUDED IN THE PRICE BID FOR VARIOUS OTHER ITEMS OF CONTRACT.

• PERFORM STRUCTURAL LIFTING UNDER ITEM 585.02M - STRUCTURAL LIFTING OPERATIONS - TYPE B (LIFTING AT A PIER) OR ITEM 585.03M - STRUCTURAL LIFTING OPERATIONS - TYPE C (LIFTING AT A PIER WHERE THE CONTRACTOR SHALL BE REQUIRED TO LIFT OFF THE FOOTING AND/OR GROUND LEVEL.

JACKING LOADS:

D.L. = 100 MT
L.L. = 50 MT
TOTAL = 150 MT

LEGEND:

ITEM 582.05M - REMOVAL OF STRUCTURAL CONCRETE- REPLACE WITH CLASS A CONCRETE (CM)

ITEM 582.07M - REMOVAL OF STRUCTURAL CONCRETE - REPLACE WITH VERTICAL OVERHEAD PATCH MATERIAL. (SM)

ITEM 580.01 M - REMOVAL OF STRUCTURAL CONCRETE. (CM) AND ITEM 555.0105 M - CONCRETE FOR STRUCTURES CLASS A. (CM)

ALL DIMENSIONS ARE IN mm UNLESS OTHERWISE NOTED

AS BUILT REVISIONS

SIGNATURE DATE

INTERSTATE 481 NB
OVER
CSX RAILROAD YARD
PIER 3

STATE OF NEW YORK
DEPARTMENT OF TRANSPORTATION

FILENAME	REGION	DATE	DRAWING NO.
305613AE.P3A	3	10/02	PR17-3N

DESIGN SUPERVISOR ____ JOB MANAGER ____ DESIGNED BY ____ DRAFTED BY ____ CHECKED BY ____ ESTIMATED BY ____

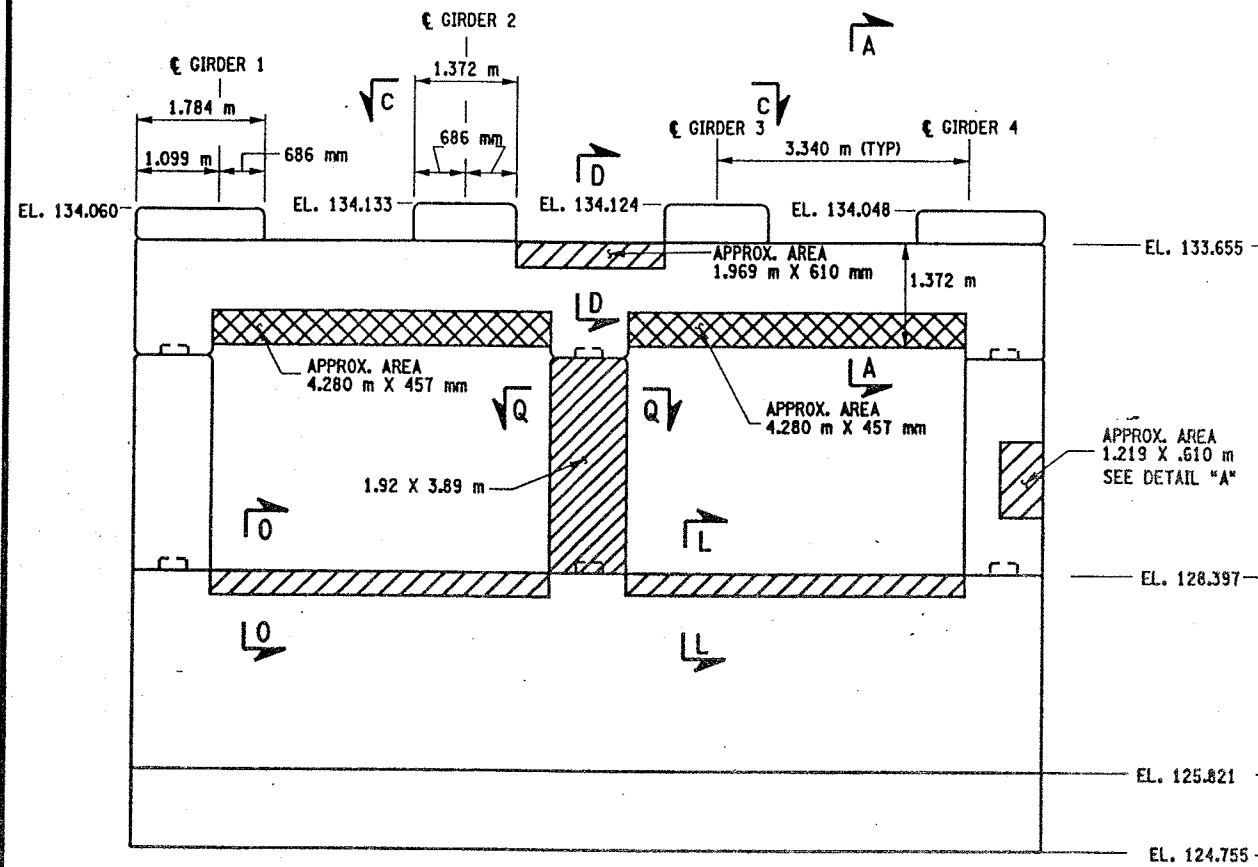

PIER 4 - FRONT FACE (LOOKING NORTH)
BIN 1093572
SCALE: 1 TO 50

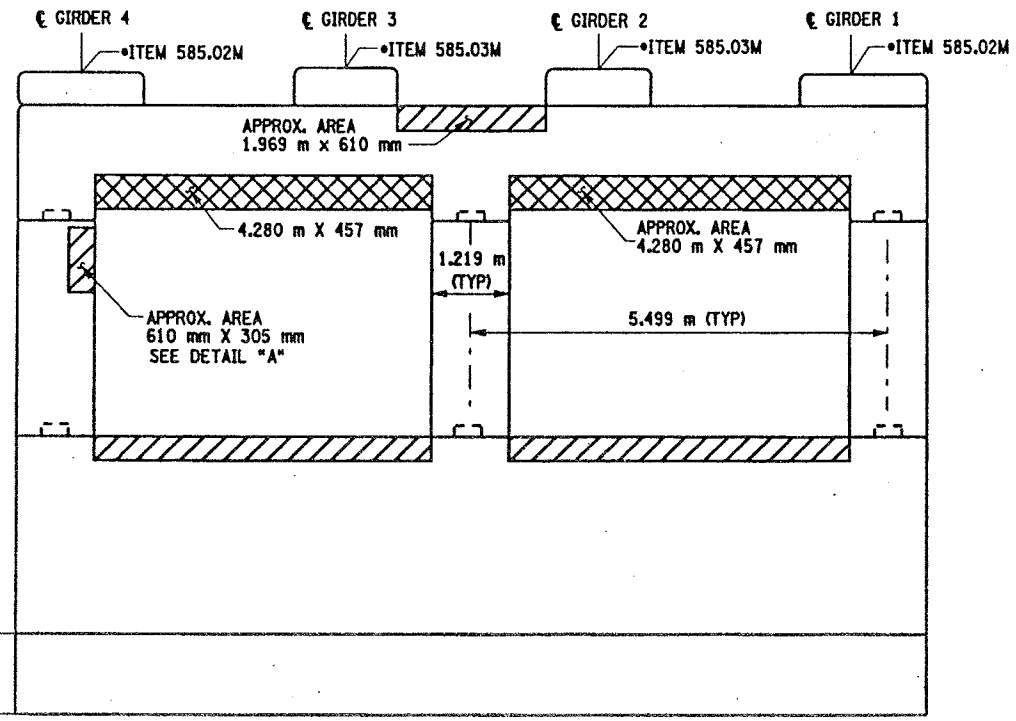

PIER 4 - BACK FACE (LOOKING SOUTH)
BIN 1093572
SCALE: 1 TO 50

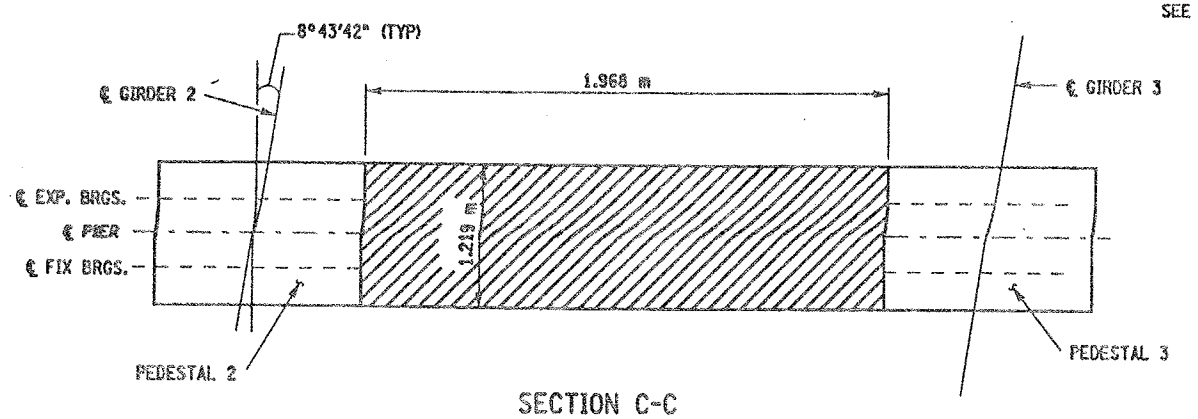

SECTION C-C
NOT TO SCALE

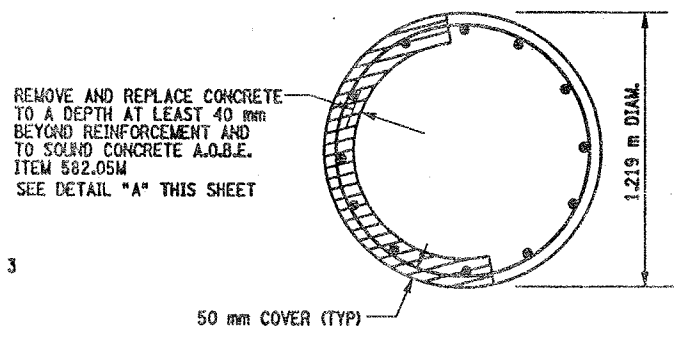

THE CONTRACTOR SHALL ONLY REMOVE AND REPLACE CONCRETE ON 1/4 OF THE CIRCUMFERENCE OF THE COLUMN SIMULTANEOUSLY, FOR THE FULL CURING PERIOD.

SECTION Q-Q
NOT TO SCALE

LIST OF ITEMS USED:

ITEM 15565.4302M - BRIDGE BEARING RESTORATION (EA)
ITEM 582.05M - REM. OF STRUC. CONC. - REPLACE WITH CLASS A CONCRETE (CM)
ITEM 582.07M - REM. OF STRUC. CONC. - REPL. W/VERT. OVERHEAD PATCH MAT'L (SM)
ITEM 585.02M - STRUCTURAL LIFTING OPERATIONS - TYPE B (EA)
ITEM 585.03M - STRUCTURAL LIFTING OPERATION - TYPE C (EA)

FED ROAD REG. NO.	STATE	CONTRACT NO.	SHEET NO.	TOTAL SHEETS
1	N.Y.	D259214	319	432

BRIDGE REHABILITATION PROJECT (ELEMENT SPECIFIC)
VARIOUS BRIDGES ON INTERSTATE 481
TOWNS OF DEWITT AND CICERO
ONONDAGA COUNTY
P.I.N. 305613 B.I.N. 1093572

NOTES:

1. ALL REINFORCEMENT TO REMAIN.
2. RESTORE TO ORIGINAL DIMENSIONS.
3. PEDESTALS NUMERICALLY NUMBERED FROM WEST TO EAST.
4. FOR THE CONCRETE REPAIR AREAS, THE CONCRETE SHALL BE REMOVED TO AT LEAST 40mm MIN. BEYOND THE ENCOUNTERED REINFORCEMENT AND TO SOUND CONCRETE, A.O.B.E.
5. ELEVATIONS SHOWN ARE FROM ORIGINAL CONTRACT PLANS F.I.S.H. 70-7 AND ARE FOR REFERENCE ONLY.
6. REMOVAL DIMENSIONS SHOWN ON PLANS ARE ESTIMATED AND SHALL BE FIELD VERIFIED BY THE CONTRACTOR AND ENGINEER PRIOR TO BEGINNING OF REMOVAL OPERATIONS A.O.B.E.
7. PERFORM BEARING RESTORATION TO ALL EXPANSION BEARINGS (TO INCLUDE RESETTING OF UNDEREXTENDED OR OVEREXTENDED BEARINGS). SEE DWG. BR-10 AND BR-11 FOR BEARING RESTORATION DETAILS. SEE DWG. PR17-1S FOR BEARING RESTORATION NOTES.
8. SEE DWG. PR17-2S FOR SECTIONS A-A, D-D AND DETAIL "A".
9. SEE DWG. PR17-4S FOR SECTION O-O.
10. SEE DWG. PR17-2N FOR SECTION L-L.
11. ALL CONCRETE REMOVAL SHALL BE SAWCUT TO PRODUCE NEAT REMOVAL LINES. COST TO BE INCLUDED IN THE PRICE BID FOR ITEM 582.05M AND ITEM 582.07M.
12. FOR JACKING NOTES SEE DWG PR17-1S.
13. CONTRACTOR SHALL REMOVE DEBRIS FROM TOP OF PEDESTALS AND TOP OF CAP BEAM. COST TO BE INCLUDED IN THE PRICE BID FOR VARIOUS OTHER ITEMS OF CONTRACT.

• PERFORM STRUCTURAL LIFTING UNDER ITEM 585.02M - STRUCTURAL LIFTING OPERATIONS - TYPE B (LIFTING AT A PIER) OR ITEM 585.03M - STRUCTURAL LIFTING OPERATIONS - TYPE C (LIFTING AT A PIER WHERE THE CONTRACTOR SHALL BE REQUIRED TO LIFT OFF THE FOOTING AND/OR GROUND LEVEL.

JACKING LOADS:

D.L. = 100 MT
L.L. = 50 MT
TOTAL = 150 MT

LEGEND:

ITEM 582.05M - REMOVAL OF STRUCTURAL CONC. REPLACE WITH CLASS A CONCRETE (CM)

ITEM 582.07M - REMOVAL OF STRUCTURAL CONCRETE - REPLACE WITH VERTICAL OVERHEAD PATCH MATERIAL. (SM)

ALL DIMENSIONS ARE IN mm UNLESS OTHERWISE NOTED

AS BUILT REVISIONS

SIGNATURE DATE

INTERSTATE 481 NB
OVER
CSX RAILROAD
PIER 4

STATE OF NEW YORK
DEPARTMENT OF TRANSPORTATION

FILENAME	REGION	DATE	DRAWING NO.
305613AE.P4A	3	10/02	PR17-4N

DESIGN SUPERVISOR ____ JOB MANAGER ____ DESIGNED BY ____ CHECKED BY ____ ESTIMATED BY ____ DRAFTED BY ____ CHECKED BY

FED ROAD REG. NO.	STATE	CONTRACT NO.	SHEET NO.	TOTAL SHEETS
1	N.Y.	D259214	320	432

BRIDGE REHABILITATION PROJECT (ELEMENT SPECIFIC)
VARIOUS BRIDGES ON INTERSTATE 481
TOWNS OF DEWITT AND CICERO
ONONDAGA COUNTY
P.I.N. 305613 B.I.N. 1093572

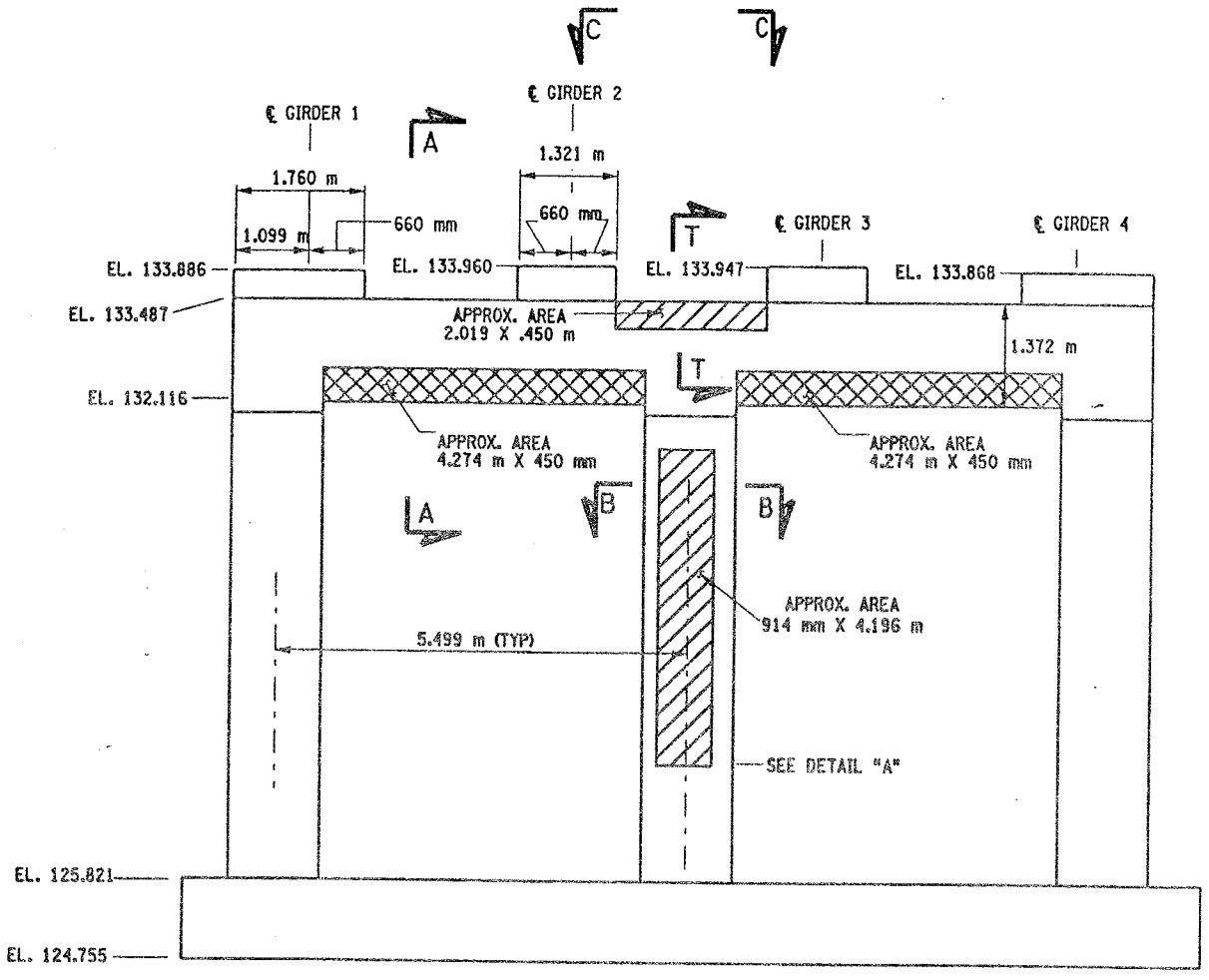

PIER 5 - FRONT FACE (LOOKING NORTH)
BIN 1093572
SCALE: 1 TO 50

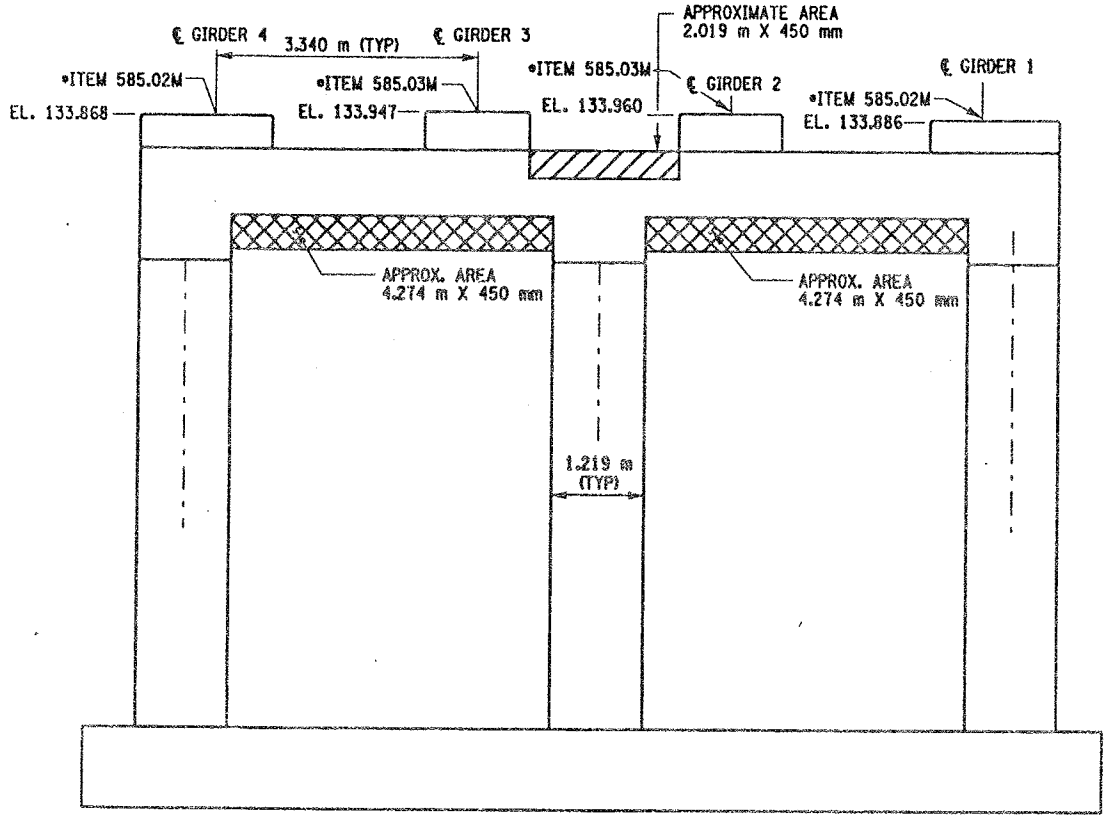

PIER 5 - BACK FACE (LOOKING SOUTH)
BIN 1093572
SCALE: 1 TO 50

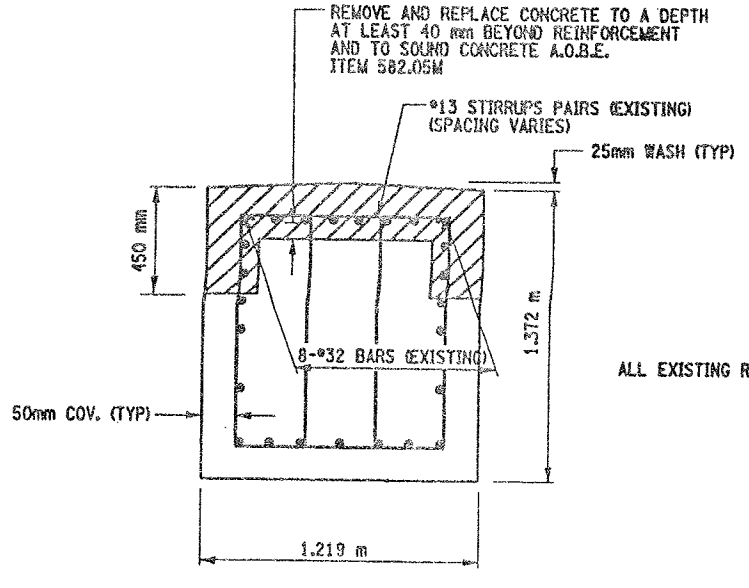

SECTION T-T
NOT TO SCALE

ALL EXISTING REINFORCEMENT TO REMAIN

• PERFORM STRUCTURAL LIFTING UNDER ITEM 585.02M - STRUCTURAL LIFTING OPERATIONS - TYPE B (LIFTING AT A PIER) OR ITEM 585.03M - STRUCTURAL LIFTING OPERATIONS - TYPE C (LIFTING AT A PIER WHERE THE CONTRACTOR SHALL BE REQUIRED TO LIFT OFF THE FOOTING AND/OR GROUND LEVEL.

JACKING LOADS:

D.L. = 100 MT
L.L. = 50 MT
TOTAL = 150 MT

LIST OF ITEMS USED:
ITEM 15565.4302M - BRIDGE BEARING RESTORATION (EA)
ITEM 582.05M - REM. OF STRUC. CONC. - REPLACE WITH CLASS A CONCRETE (CM)
ITEM 582.07M - REM. OF STRUC. CONC. - REPL. W/ VERT. OVERHEAD PATCH MATL. (SM)
ITEM 585.02M - STRUCTURAL LIFTING OPERATIONS - TYPE B (EA)
ITEM 585.03M - STRUCTURAL LIFTING OPERATION - TYPE C (EA)

NOTES:

1. ALL REINFORCEMENT TO REMAIN.
2. RESTORE TO ORIGINAL DIMENSIONS.
3. PEDESTALS NUMERICALLY NUMBERED FROM WEST TO EAST.
4. FOR THE CONCRETE REPAIR AREAS, THE CONCRETE SHALL BE REMOVED TO AT LEAST 40mm MIN. BEYOND THE ENCOUNTERED REINFORCEMENT AND TO SOUND CONCRETE, A.O.B.E.
5. ELEVATIONS SHOWN ARE FROM ORIGINAL CONTRACT PLANS F.I.S.H. 70-7 AND ARE FOR REFERENCE ONLY.
6. REMOVAL DIMENSIONS SHOWN ON PLANS ARE ESTIMATED AND SHALL BE FIELD VERIFIED BY THE CONTRACTOR AND ENGINEER PRIOR TO BEGINNING OF REMOVAL OPERATIONS A.O.B.E.
7. PERFORM BEARING RESTORATION TO ALL EXPANSION BEARINGS (TO INCLUDE RESETTING OF UNDEREXTENDED OR OVEREXTENDED BEARINGS). SEE DWG. BR-10 & BR-11 FOR BEARING RESTORATION DETAILS. SEE DWG. PR17-1S FOR BEARING RESTORATION NOTES.
8. SEE DWG. PR17-2S FOR SECTION A-A AND B-B AND DETAIL "A".
9. SEE DWG PR17-1S FOR SECTION C-C.
10. ALL CONCRET REMOVAL SHALL BE SAWCUT TO PRODUCE NEAT REMOVAL LINES. COST TO BE INCLUDED IN THE PRICE BID FOR ITEM 582.05M AND ITEM 582.07M.
11. FOR JACKING NOTES SEE DWG. PR17-1S.
12. CONTRACTOR SHALL REMOVE DEBRIS FROM TOP OF CAP BEAM. COST TO BE INCLUDED IN THE PRICE BID FOR VARIOUS ITEMS OF CONTRACT.

LEGEND:

ITEM 582.05M - REMOVAL OF STRUCTURAL CONCRETE- REPLACE WITH CLASS A CONCRETE (CM)

ITEM 582.07M - REMOVAL OF STRUCTURAL CONCRETE - REPLACE WITH VERTICAL OVER-HEAD PATCH MATERIAL. (SM)

ALL DIMENSIONS ARE IN mm UNLESS OTHERWISE NOTED

AS BUILT REVISIONS

SIGNATURE DATE

INTERSTATE 481 NB
OVER
CSX RAILROAD YARD
PIER 5

STATE OF NEW YORK
DEPARTMENT OF TRANSPORTATION

FILENAME	REGION	DATE	DRAWING NO.
305613AE.P5A	3	10/02	PR17-5N

DESIGN SUPERVISOR ____ JOB MANAGER ____ DESIGNED BY ____ ESTIMATED BY ____ DRAFTED BY ____ CHECKED BY ____

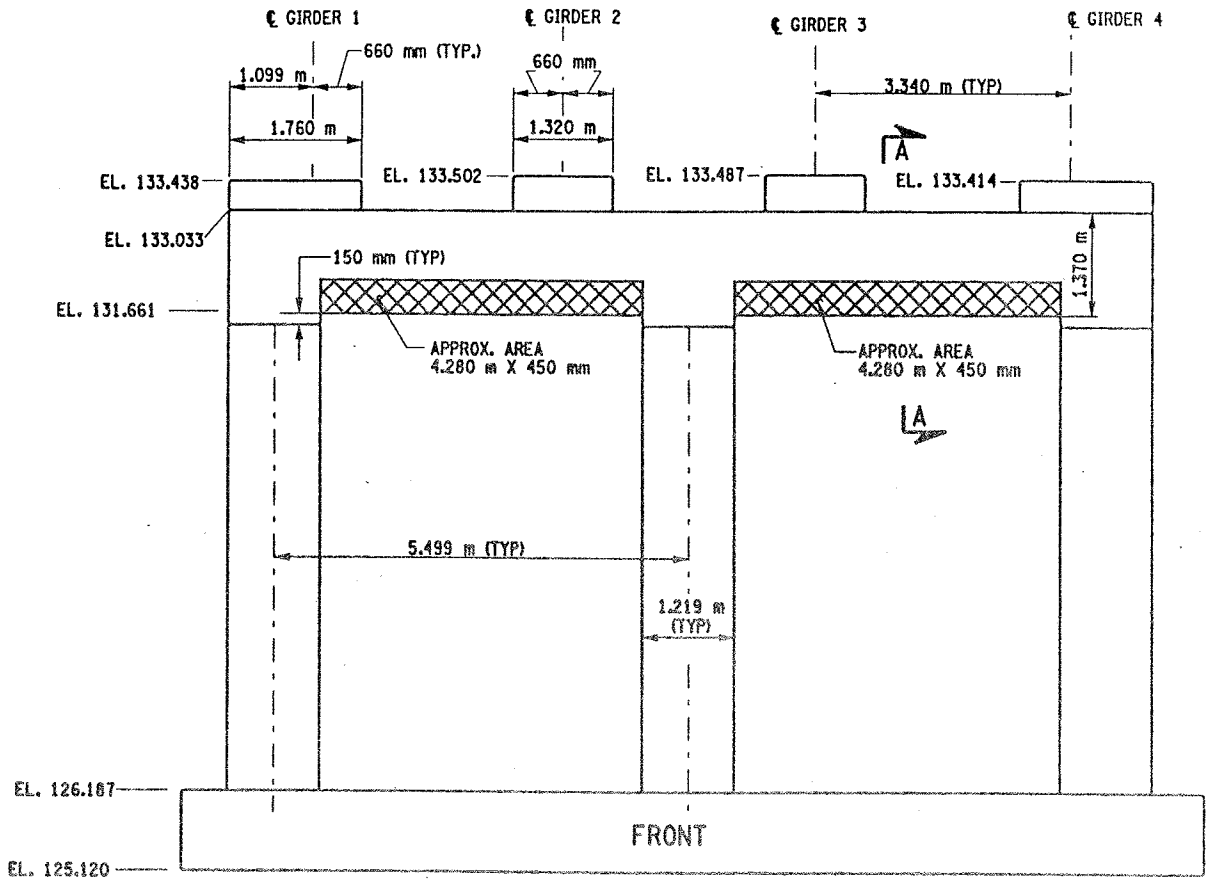

PIER 6 -FRONT FACE (LOOKING NORTH)

BIN 1093572

SCALE: 1 TO 50

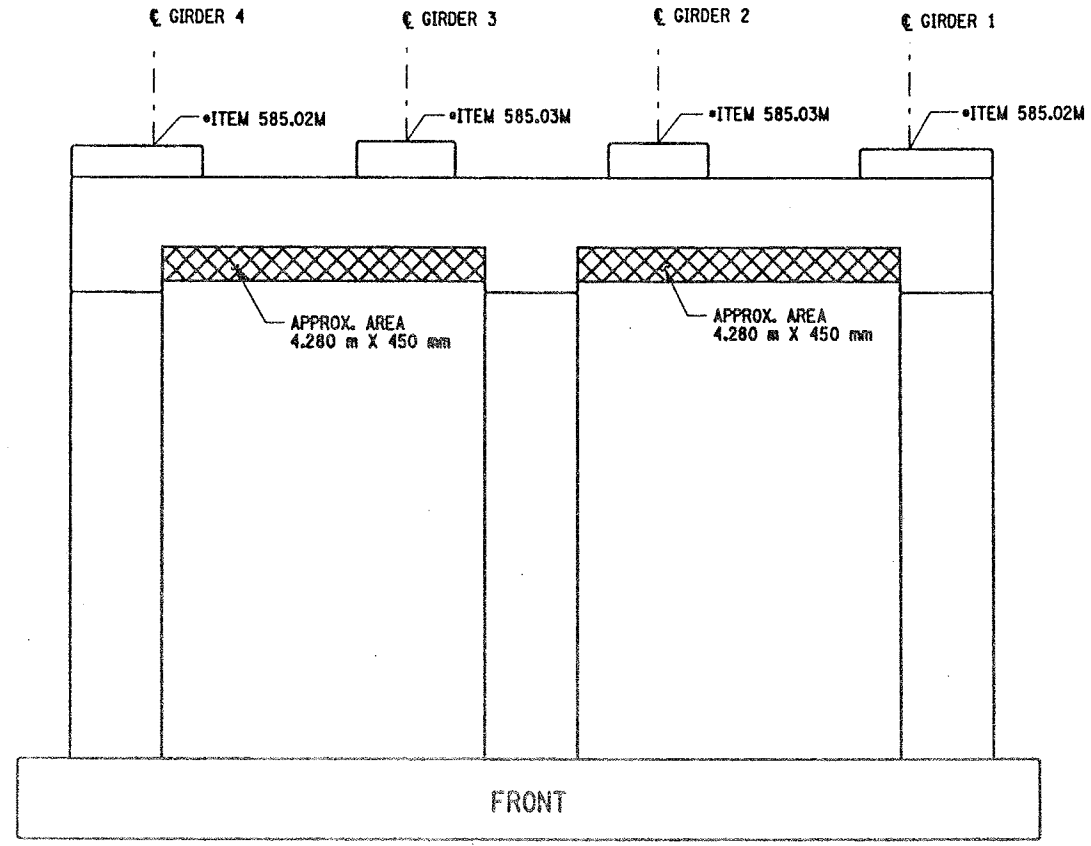

PIER 6 BACK FACE (LOOKING SOUTH)

BIN 1093572

SCALE: 1 TO 50

LIST OF ITEMS USED:

ITEM 15565.4302M- BRIDGE BEARING RESTORATION (EA)
ITEM 582.07M - REM. OF STRUC. CONC. - REPL. W/ VERT. OVERHEAD PATCH MATL. (SM)
ITEM 585.02M - STRUCTURAL LIFTING OPERATIONS - TYPE B (EA)
ITEM 585.03M - STRUCTURAL LIFTING OPERATION - TYPE C (EA)

FED ROAD REG. NO.	STATE	CONTRACT NO.	SHEET NO.	TOTAL SHEETS
1	N.Y.	D259214	321	432

BRIDGE REHABILITATION PROJECT (ELEMENT SPECIFIC)
VARIOUS BRIDGES ON INTERSTATE 481
TOWNS OF DEWITT AND CICERO
ONONDAGA COUNTY
P.I.N. 305613 B.I.N. 1093572

NOTES:

1. ALL REINFORCEMENT TO REMAIN.
2. RESTORE TO ORIGINAL DIMENSIONS.
3. PEDESTALS NUMERICALLY NUMBERED FROM WEST TO EAST.
4. FOR THE CONCRETE REPAIR AREAS, THE CONCRETE SHALL BE REMOVED TO AT LEAST 40mm MIN. BEYOND THE ENCOUNTERED REINFORCEMENT AND TO SOUND CONCRETE, A.O.B.E.
5. ELEVATIONS SHOWN ARE FROM ORIGINAL CONTRACT PLANS F.I.S.H. 70-7 AND ARE FOR REFERENCE ONLY.
6. REMOVAL DIMENSIONS SHOWN ON PLANS ARE ESTIMATED AND SHALL BE FIELD VERIFIED BY THE CONTRACTOR AND ENGINEER PRIOR TO BEGINNING OF REMOVAL OPERATIONS A.O.B.E.
7. PERFORM BEARING RESTORATION TO ALL EXPANSION BEARINGS (TO INCLUDE RESETTING OF UNDEREXTENDED OR OVEREXTENDED BEARINGS). SEE DWG. BR-10 & BR-11 FOR BEARING RESTORATION DETAILS. SEE DWG. PR17-1S FOR BEARING RESTORATION NOTES.
8. SEE DWG. PR17-2S FOR SECTION "A-A".
9. ALL CONCRETE REMOVAL SHALL BE SAWCUT TO PRODUCE NEAT REMOVAL LINES. COST TO BE INCLUDED IN THE PRICE BID FOR ITEM 582.05M AND 582.07M.
10. FOR JACKING NOTES SEE DWG. PR17-1S.

• PERFORM STRUCTURAL LIFTING UNDER ITEM 585.02M - STRUCTURAL LIFTING OPERATIONS - TYPE B (LIFTING AT A PIER) OR ITEM 585.03M - STRUCTURAL LIFTING OPERATIONS - TYPE C (LIFTING AT A PIER WHERE THE CONTRACTOR SHALL BE REQUIRED TO LIFT OFF THE FOOTING AND/OR GROUND LEVEL.

JACKING LOADS:

D.L. = 75 MT
L.L. = 50 MT
TOTAL = 125 MT

LEGEND

ITEM 582.07M - REMOVAL OF STRUCTURAL CONCRETE - REPLACE WITH VERTICAL OVERHEAD PATCH MATERIAL. (SM)

ALL DIMENSIONS ARE IN mm UNLESS OTHERWISE NOTED

AS BUILT REVISIONS

SIGNATURE DATE

INTERSTATE 481 NB
OVER
CSX RAILROAD YARD
PIER 6

STATE OF NEW YORK
DEPARTMENT OF TRANSPORTATION

FILENAME	REGION	DATE	DRAWING NO.
305613AEP6A	3	10/02	PR17-6N

DESIGN SUPERVISOR ____ JOB MANAGER ____ DESIGNED BY ____ DRAFTED BY ____ ESTIMATED BY ____ CHECKED BY ____ CHECKED BY

FED ROAD REG. NO.	STATE	CONTRACT NO.	SHEET NO.	TOTAL SHEETS
1	N.Y.	D259214	322	432

BRIDGE REHABILITATION PROJECT (ELEMENT SPECIFIC)
VARIOUS BRIDGES ON INTERSTATE 481
TOWNS OF DEWITT AND CICERO
ONONDAGA COUNTY
P.I.N. 305613 B.I.N. 1093572

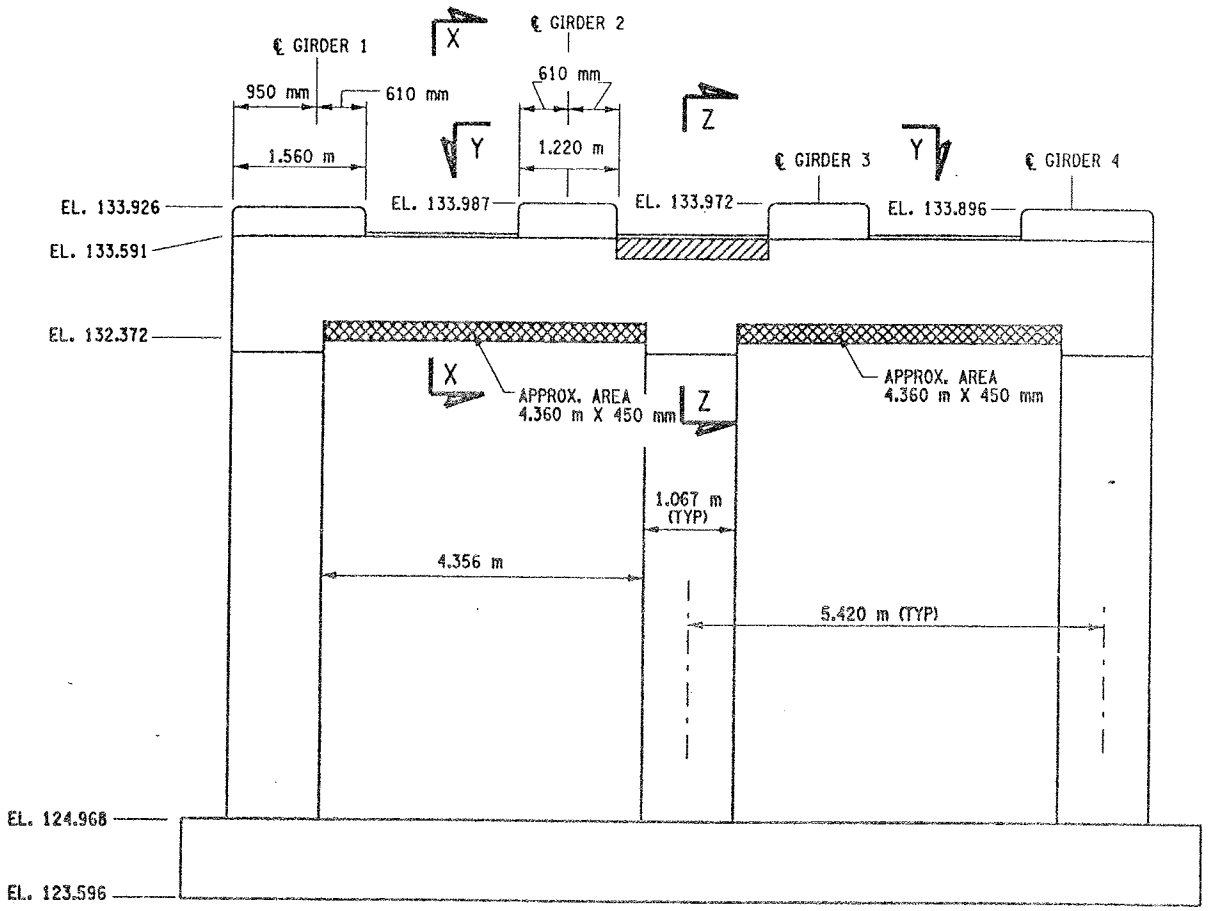

PIER 7 - FRONT FACE (LOOKING NORTH)
BIN 1093572
SCALE: 1 TO 50

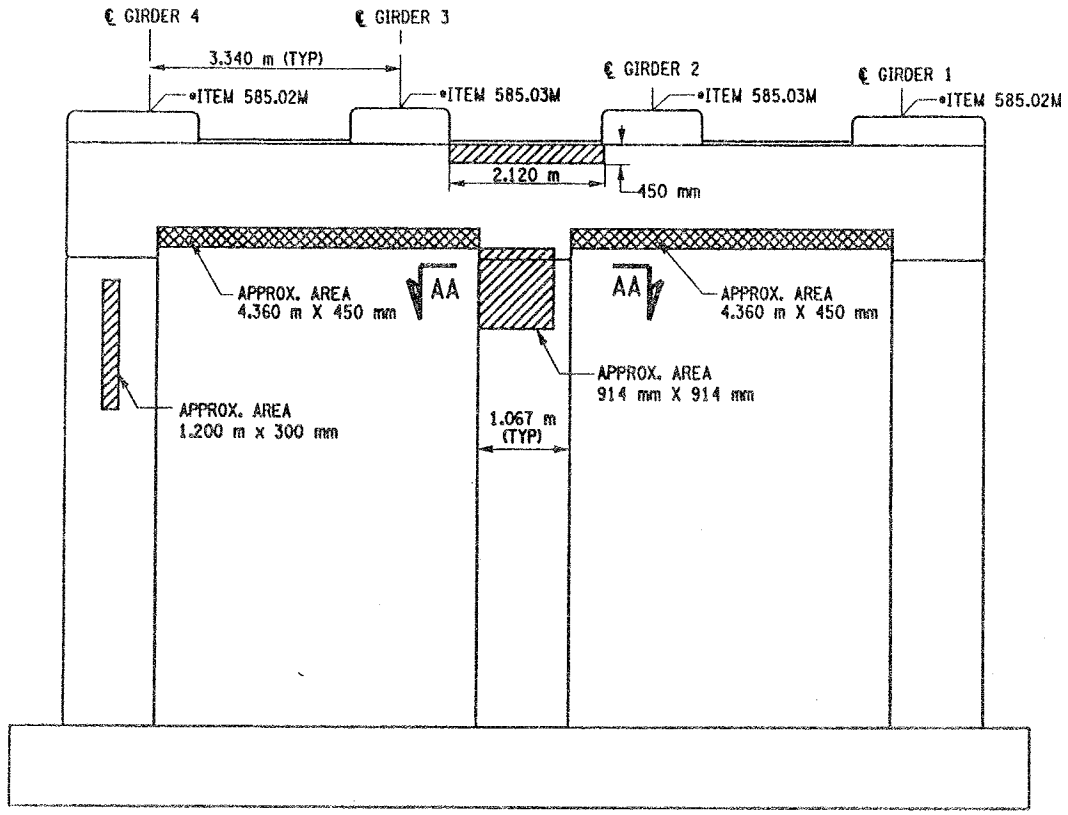

PIER 7 - BACK FACE (LOOKING SOUTH)
BIN 1093572
SCALE: 1 TO 50

NOTES:

1. ALL REINFORCEMENT TO REMAIN.
2. RESTORE TO ORIGINAL DIMENSIONS.
3. PEDESTALS NUMERICALLY NUMBERED FROM WEST TO EAST.
4. FOR THE CONCRETE REPAIR AREAS, THE CONCRETE SHALL BE REMOVED TO AT LEAST 40mm MIN. BEYOND THE ENCOUNTERED REINFORCEMENT AND TO SOUND CONCRETE, A.O.B.E.
5. ELEVATIONS SHOWN ARE FROM ORIGINAL CONTRACT PLANS F.I.S.H. 70-7 AND ARE FOR REFERENCE ONLY.
6. REMOVAL DIMENSIONS SHOWN ON PLANS ARE ESTIMATED AND SHALL BE FIELD VERIFIED BY THE CONTRACTOR PRIOR TO BEGINNING OF REMOVAL OPERATIONS A.O.B.E.
7. PERFORM BEARING RESTORATION TO ALL EXPANSION BEARINGS (TO INCLUDE RESETTING OF UNDEREXTENDED OR OVEREXTENDED BEARINGS). SEE DWG. PR17-1S FOR BEARING RESTORATION NOTES. SEE DWG. BR-10 & BR-11 FOR BEARING RESTORATION DETAILS.
8. ALL CONCRETE REMOVAL SHALL BE SAWCUT TO PRODUCE NEAT REMOVAL LINES. COST TO BE INCLUDED IN THE PRICE BID FOR ITEM 582.05M AND 582.07M.
9. FOR JACKING NOTES SEE DWG PR17-1S.

* PERFORM STRUCTURAL LIFTING UNDER ITEM 585.02M - STRUCTURAL LIFTING OPERATIONS - TYPE B (LIFTING AT A PIER) OR ITEM 585.03M - STRUCTURAL LIFTING OPERATIONS - TYPE C (LIFTING AT A PIER WHERE THE CONTRACTOR SHALL BE REQUIRED TO LIFT OFF THE FOOTING AND/OR GROUND LEVEL.

JACKING LOADS:

D.L. = 75 MT
L.L. = 50 MT
TOTAL = 125 MT

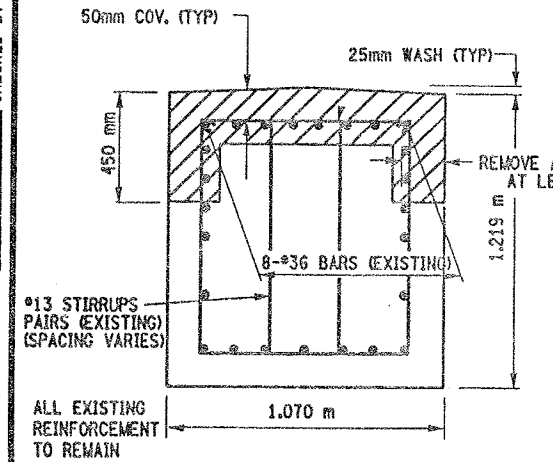

SECTION Z-Z
NOT TO SCALE

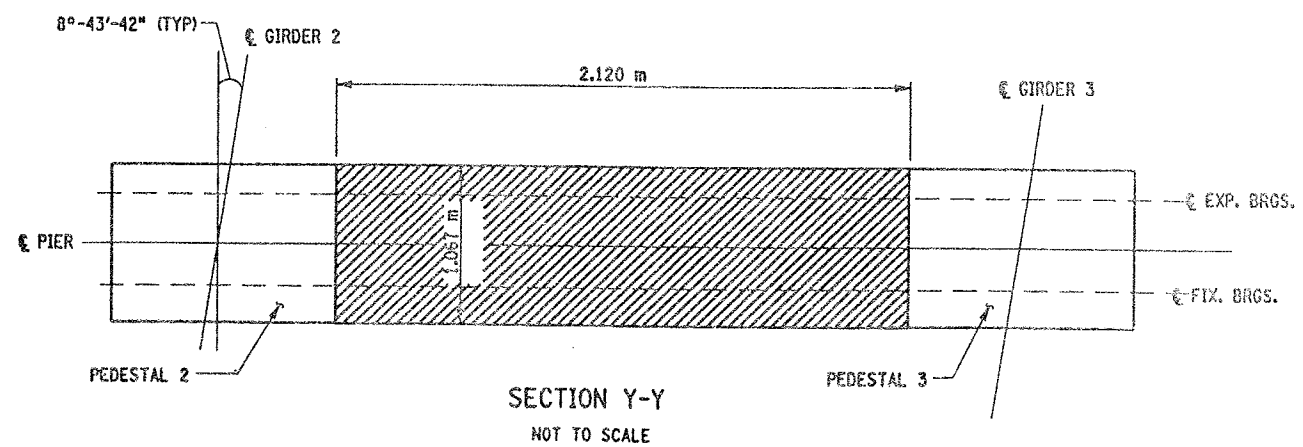

SECTION Y-Y
NOT TO SCALE

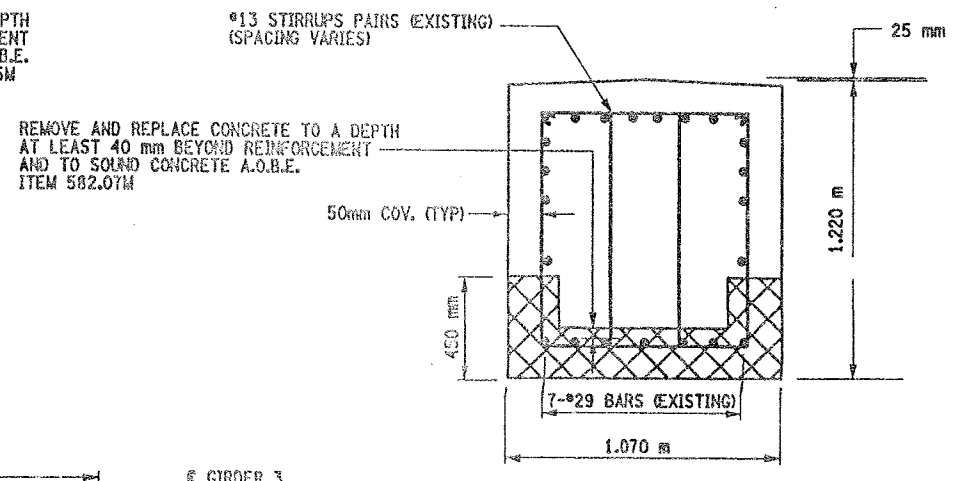

ALL EXISTING REINFORCEMENT TO REMAIN

SECTION X-X
NOT TO SCALE

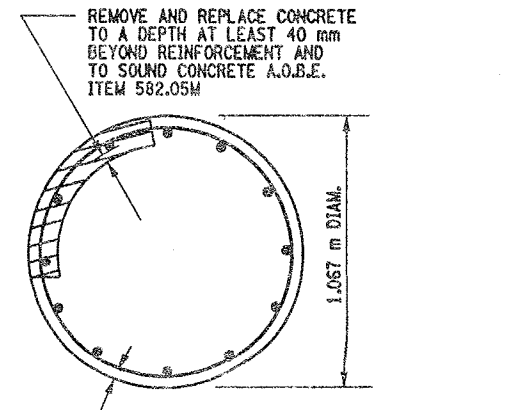

THE CONTRACTOR SHALL ONLY REMOVE AND REPLACE CONCRETE ON 1/4 OF THE CIRCUMFERENCE OF THE COLUMN SIMULTANEOUSLY, FOR THE FULL CURING PERIOD. SEE DETAIL "A" ON DWG. PR17-2S

SECTION AA-AA

NOT TO SCALE

LEGEND:

ITEM 582.05M - REMOVAL OF STRUCTURAL CONCRETE- REPLACE WITH CLASS A CONCRETE. (CM)

ITEM 582.07M - REMOVAL OF STRUCTURAL CONCRETE - REPLACE WITH VERTICAL OVERHEAD PATCH MATERIAL. (SM)

LIST OF ITEMS USED:

ITEM 15565.4302M - BRIDGE BEARING RESTORATION (EA)
ITEM 582.05M - REM. OF STRUC. CONC. - REPLACE WITH CLASS A CONCRETE (CM)
ITEM 582.07M - REM. OF STRUC. CONC. - REPL. W/ VERT. OVERHEAD PATCH MAT'L (SM)
ITEM 585.02M - STRUCTURAL LIFTING OPERATIONS - TYPE B (EA)
ITEM 585.03M - STRUCTURAL LIFTING OPERATION - TYPE C (EA)

ALL DIMENSIONS ARE IN mm UNLESS OTHERWISE NOTED

AS BUILT REVISIONS

SIGNATURE DATE

INTERSTATE 481 NB
OVER
CSX RAILROAD YARD
PIER 7

STATE OF NEW YORK
DEPARTMENT OF TRANSPORTATION

FILENAME	REGION	DATE	DRAWING NO.
305613AE.PTA	3	10/02	PR17-7N

DESIGN SUPERVISOR ____ JOB MANAGER ____ DESIGNED BY ____ ESTIMATED BY ____ DRAFTED BY ____ CHECKED BY ____

FED ROAD REG. NO.	STATE	CONTRACT NO.	SHEET NO.	TOTAL SHEETS
1	N.Y.	D259214	323	432

BRIDGE REHABILITATION PROJECT (ELEMENT SPECIFIC)
VARIOUS BRIDGES ON INTERSTATE 481
TOWNS OF DEWITT AND CICERO
ONONDAGA COUNTY
P.I.N. 305613 B.I.N. 1093572

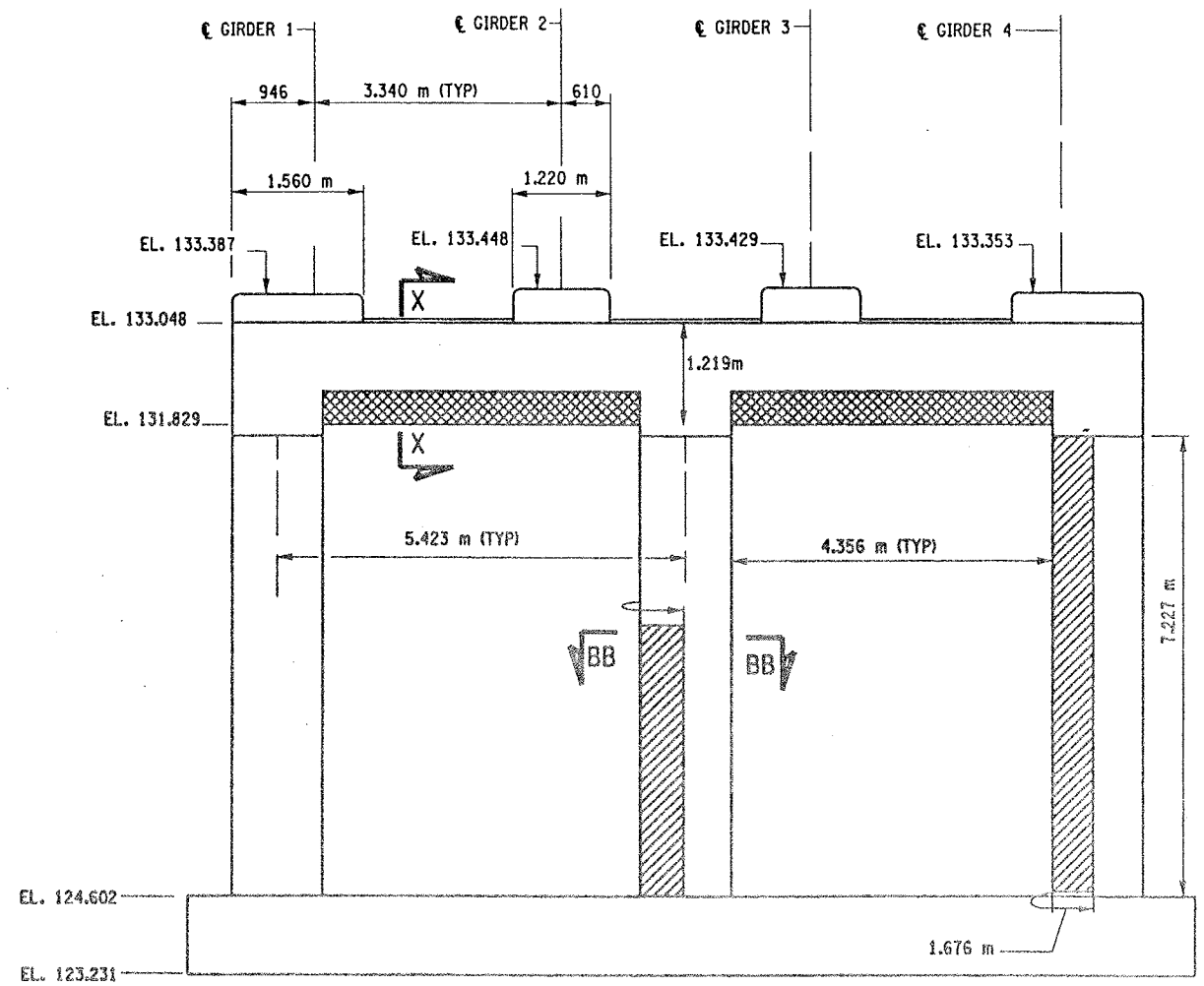

PIER 8 - FRONT FACE (LOOKING NORTH)
BIN 1093572
SCALE: 1 TO 50

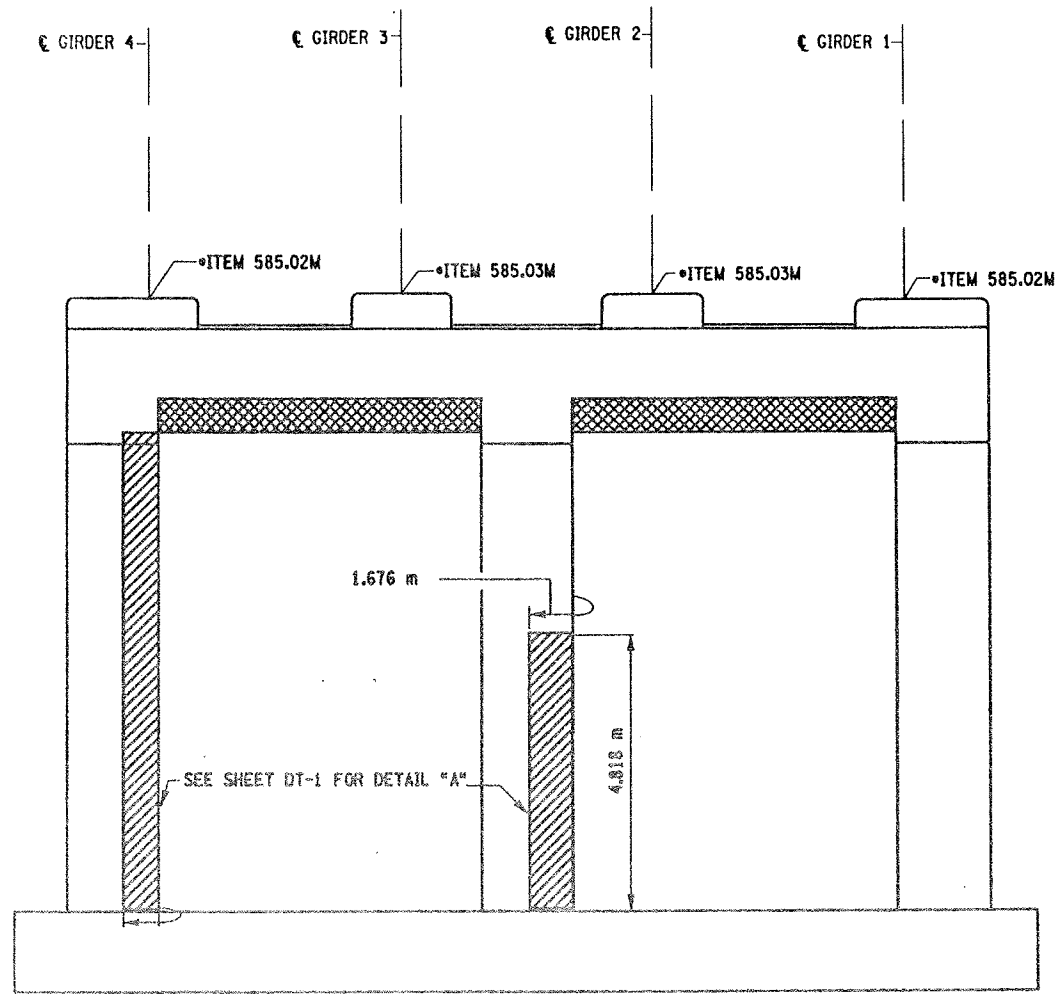

PIER 8 - BACK FACE (LOOKING SOUTH)
BIN 1093572
SCALE: 1 TO 50

NOTES:

1. ALL REINFORCEMENT TO REMAIN.
2. RESTORE TO ORIGINAL DIMENSIONS.
3. PEDESTALS NUMERICALLY NUMBERED FROM WEST TO EAST.
4. FOR THE CONCRETE REPAIR AREAS, THE CONCRETE SHALL BE REMOVED TO AT LEAST 40mm MIN. BEYOND THE ENCOUNTERED REINFORCEMENT AND TO SOUND CONCRETE, A.O.B.E.
5. ELEVATIONS SHOWN ARE FROM ORIGINAL CONTRACT PLANS F.I.S.H. 70-7 AND ARE FOR REFERENCE ONLY.
6. REMOVAL DIMENSIONS SHOWN ON PLANS ARE ESTIMATED AND SHALL BE FIELD VERIFIED BY THE CONTRACTOR AND ENGINEER PRIOR TO BEGINNING OF REMOVAL OPERATIONS A.O.B.E.
7. PERFORM BEARING RESTORATION TO ALL EXPANSION BEARINGS (TO INCLUDE RESETTING OF UNDEREXTENDED OR OVEREXTENDED BEARINGS). SEE DWG. BR-10 & BR-11 FOR BEARING RESTORATION DETAILS. SEE DWG. PR17-1S FOR BEARING RESTORATION NOTES.
8. SEE DWG. PR17-12S FOR SECTION BB-BB.
9. SEE DWG. PR17-7N FOR SECTION X-X.
10. ALL CONCRETE REMOVAL SHALL BE SAWCUT TO PRODUCE NEAT REMOVAL LINES. COST TO BE INCLUDED IN THE PRICE BID FOR ITEM 582.05M AND 582.07M.
11. FOR JACKING NOTES SEE DWG PR17-1S.

• PERFORM STRUCTURAL LIFTING UNDER ITEM 585.02M - STRUCTURAL LIFTING OPERATIONS - TYPE B (LIFTING AT A PIER) OR ITEM 585.03M - STRUCTURAL LIFTING OPERATIONS - TYPE C (LIFTING AT A PIER WHERE THE CONTRACTOR SHALL BE REQUIRED TO LIFT OFF THE FOOTING AND/OR GROUND LEVEL.

JACKING LOADS:

D.L. = 75 MT
L.L. = 50 MT
TOTAL = 125 MT

LEGEND:

ITEM 582.05M - REMOVAL OF STRUCTURAL CONCRETE- REPLACE WITH CLASS A CONCRETE (CM)

ITEM 582.07M - REMOVAL OF STRUCTURAL CONCRETE - REPLACE WITH VERTICAL OVERHEAD PATCH MATERIAL. (SM)

ALL DIMENSIONS ARE IN mm UNLESS OTHERWISE NOTED

LIST OF ITEMS USED:

ITEM 19565.4302M - BRIDGE BEARING RESTORATION (EA)
ITEM 582.05M - REM. OF STRUC. CONC. - REPLACE WITH CLASS A CONCRETE (CM)
ITEM 582.07M - REM. OF STRUC. CONC. - REPL. W/ VERT. OVERHEAD PATCH MATL. (SM)
ITEM 585.02M - STRUCTURAL LIFTING OPERATIONS - TYPE B (EA)
ITEM 585.03M - STRUCTURAL LIFTING OPERATION - TYPE C (EA)

AS BUILT REVISIONS

SIGNATURE DATE

INTERSTATE 481 NB
OVER
CSX RAILROAD YARD
PIER 8

STATE OF NEW YORK
DEPARTMENT OF TRANSPORTATION

FILENAME	REGION	DATE	DRAWING NO.
305613AE.P8A	3	10/02	PR17-8N

DESIGN SUPERVISOR ____ JOB MANAGER ____ DESIGNED BY ____ ESTIMATED BY ____ DRAFTED BY ____ CHECKED BY ____

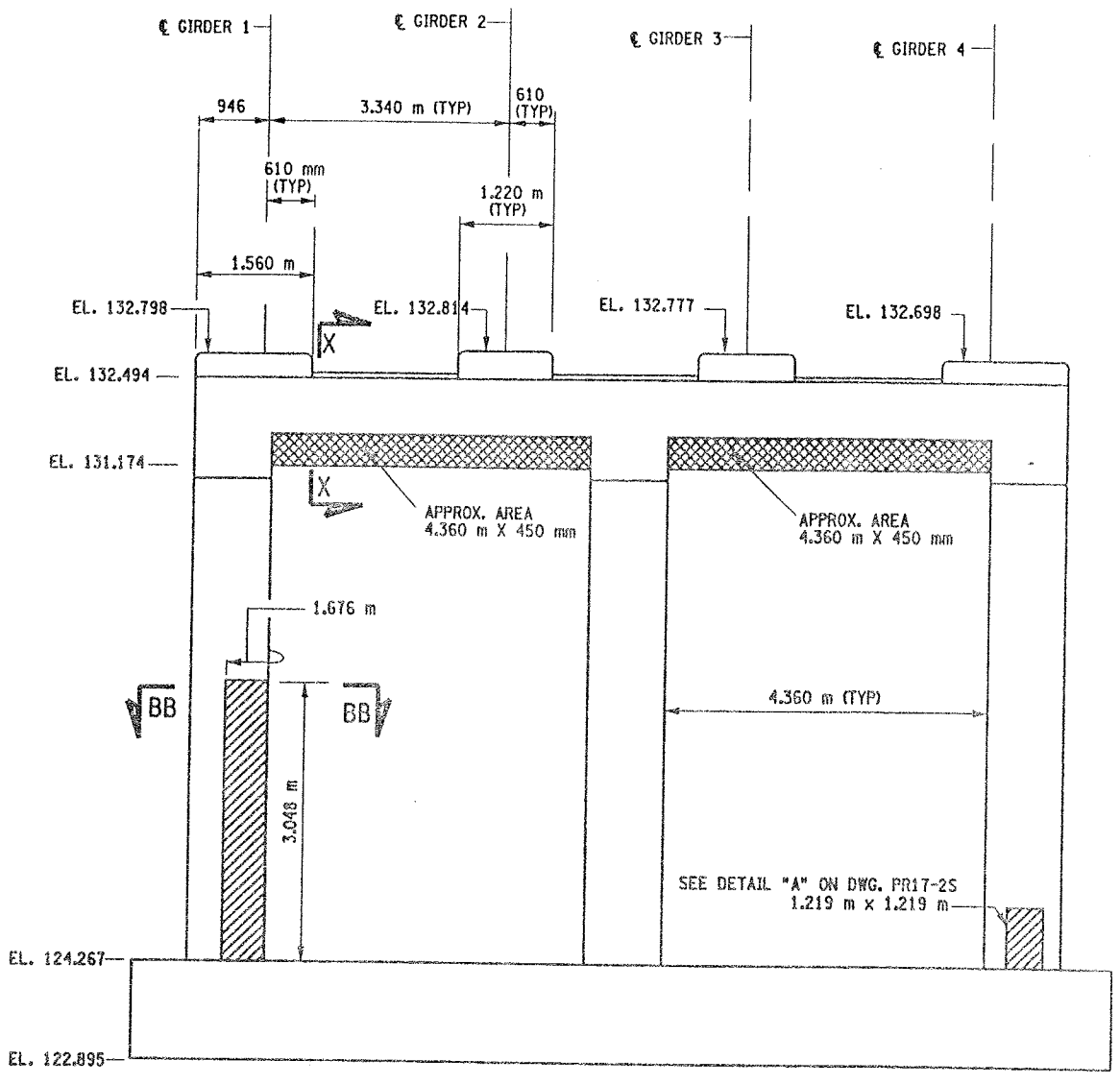

PIER 9 - FRONT FACE (LOOKING NORTH)

BIN 1093572

SCALE: 1 TO 50

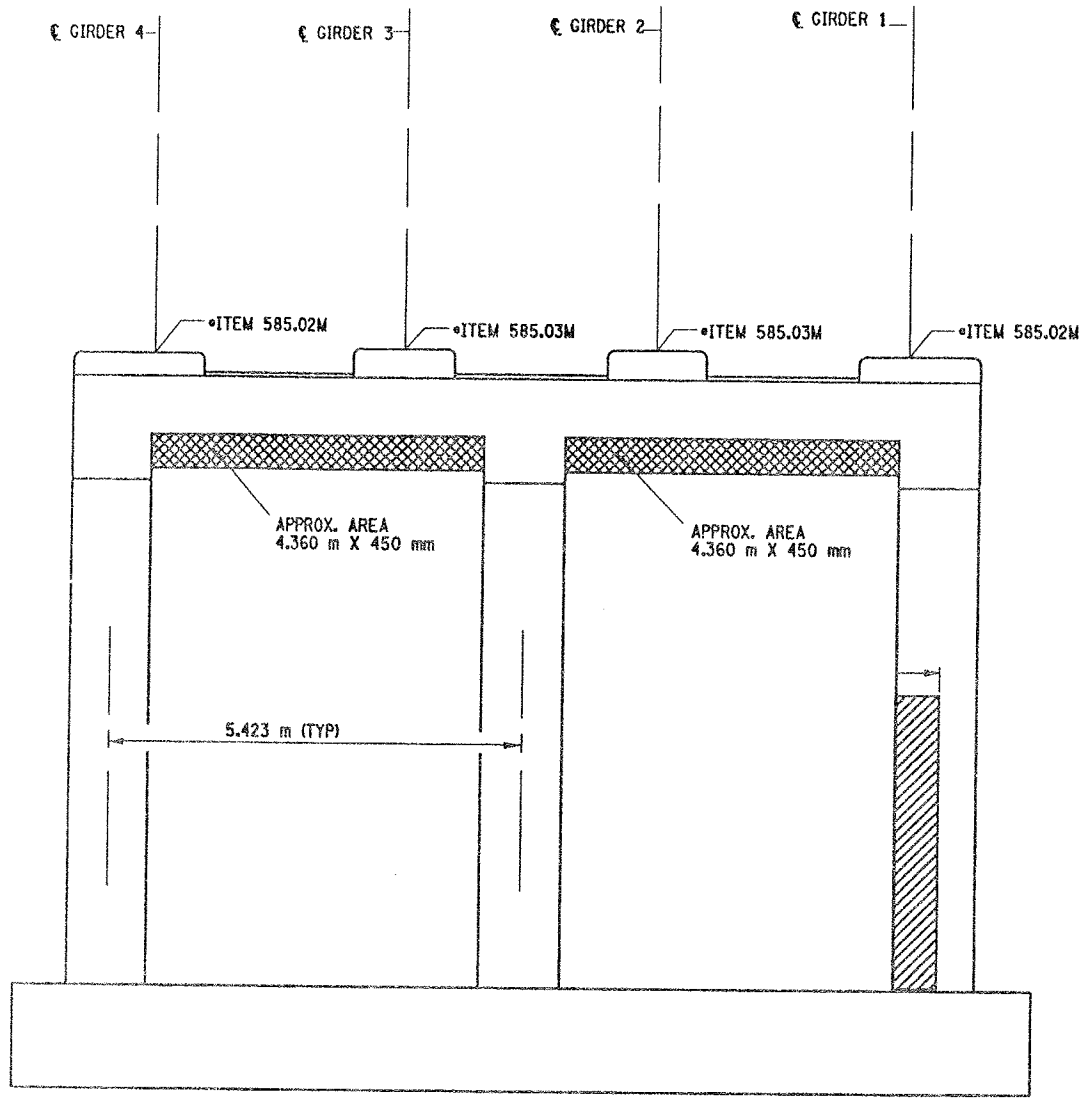

PIER 9 - BACK FACE (LOOKING SOUTH)

BIN 1093572

SCALE: 1 TO 50

LIST OF ITEMS USED:

ITEM 15565.4302M - BRIDGE BEARING RESTORATION (EA)
ITEM 582.05M - REM. OF STRUC. CONC. - REPLACE WITH CLASS A CONCRETE (CM)
ITEM 582.07M - REM. OF STRUC. CONC. - REPL. W/ VERT. OVERHEAD PATCH MAT.L (SM)
ITEM 585.02M - STRUCTURAL LIFTING OPERATIONS - TYPE B (EA)
ITEM 585.03M - STRUCTURAL LIFTING OPERATION - TYPE C (EA)

FED ROAD REC. NO.	STATE	CONTRACT NO.	SHEET NO.	TOTAL SHEETS
1	N.Y.	D259214	324	432

BRIDGE REHABILITATION PROJECT (ELEMENT SPECIFIC)

VARIOUS BRIDGES ON INTERSTATE 481

TOWNS OF DEWITT AND CICERO

ONONDAGA COUNTY

P.I.N. 305613 | B.I.N. 1093572

NOTES:

1. ALL REINFORCEMENT TO REMAIN.
2. RESTORE TO ORIGINAL DIMENSIONS.
3. PEDESTALS NUMERICALLY NUMBERED FROM WEST TO EAST.
4. FOR THE CONCRETE REPAIR AREAS, THE CONCRETE SHALL BE REMOVED TO AT LEAST 40mm MIN. BEYOND THE ENCOUNTERED REINFORCEMENT AND TO SOUND CONCRETE, A.O.B.E.
5. ELEVATIONS SHOWN ARE FROM ORIGINAL CONTRACT PLANS F.I.S.H. 70-7 AND ARE FOR REFERENCE ONLY.
6. REMOVAL DIMENSIONS SHOWN ON PLANS ARE ESTIMATED AND SHALL BE FIELD VERIFIED BY THE CONTRACTOR PRIOR TO BEGINNING OF REMOVAL OPERATIONS A.O.B.E.
7. PERFORM BEARING RESTORATION TO ALL EXPANSION BEARINGS (TO INCLUDE RESETTING OF UNDEREXTENDED OR OVEREXTENDED BEARINGS). SEE DWG. PR-1S FOR BEARING RESTORATION NOTES. SEE DWG. BR-10 & BR-11 FOR BEARING RESTORATION DETAILS.
8. SEE DWG. PR17- 12S FOR SECTION BB-BB.
9. ALL CONCRETE REMOVAL SHALL BE SAWCUT TO PRODUCE NEAT REMOVAL LINES. COST TO BE INCLUDED IN THE PRICE BID FOR ITEM 582.05M AND 582.07M.
10. FOR JACKING NOTES SEE DWG PR17-1S
11. SEE DWG. PR17-7N FOR SECTION X - X.

• PERFORM STRUCTURAL LIFTING UNDER ITEM 585.02M - STRUCTURAL LIFTING OPERATIONS - TYPE B (LIFTING AT A PIER) OR ITEM 585.03M - STRUCTURAL LIFTING OPERATIONS - TYPE C (LIFTING AT A PIER WHERE THE CONTRACTOR SHALL BE REQUIRED TO LIFT OFF THE FOOTING AND/OR GROUND LEVEL.

JACKING LOADS:

D.L. = 75 MT
L.L. = 50 MT
TOTAL = 125 MT

LEGEND:

ITEM 582.05M - REMOVAL OF STRUCTURAL CONCRETE- REPLACE WITH CLASS A CONCRETE. (CM)

ITEM 582.07M - REMOVAL OF STRUCTURAL CONCRETE - REPLACE WITH VERTICAL OVER-HEAD PATCH MATERIAL. (SM)

ALL DIMENSIONS ARE IN mm UNLESS OTHERWISE NOTED

AS BUILT REVISIONS

SIGNATURE DATE

INTERSTATE ROUTE 481 NB
OVER CSX RAILROAD YARD
PIER 9

STATE OF NEW YORK
DEPARTMENT OF TRANSPORTATION

FILENAME	REGION	DATE	DRAWING NO.
305613AE.P9A	3	10/02	PR17-9N

DESIGN SUPERVISOR ____ JOB MANAGER ____ ESTIMATED BY ____ DESIGNED BY ____ DRAFTED BY ____ CHECKED BY ____ CHECKED BY ____

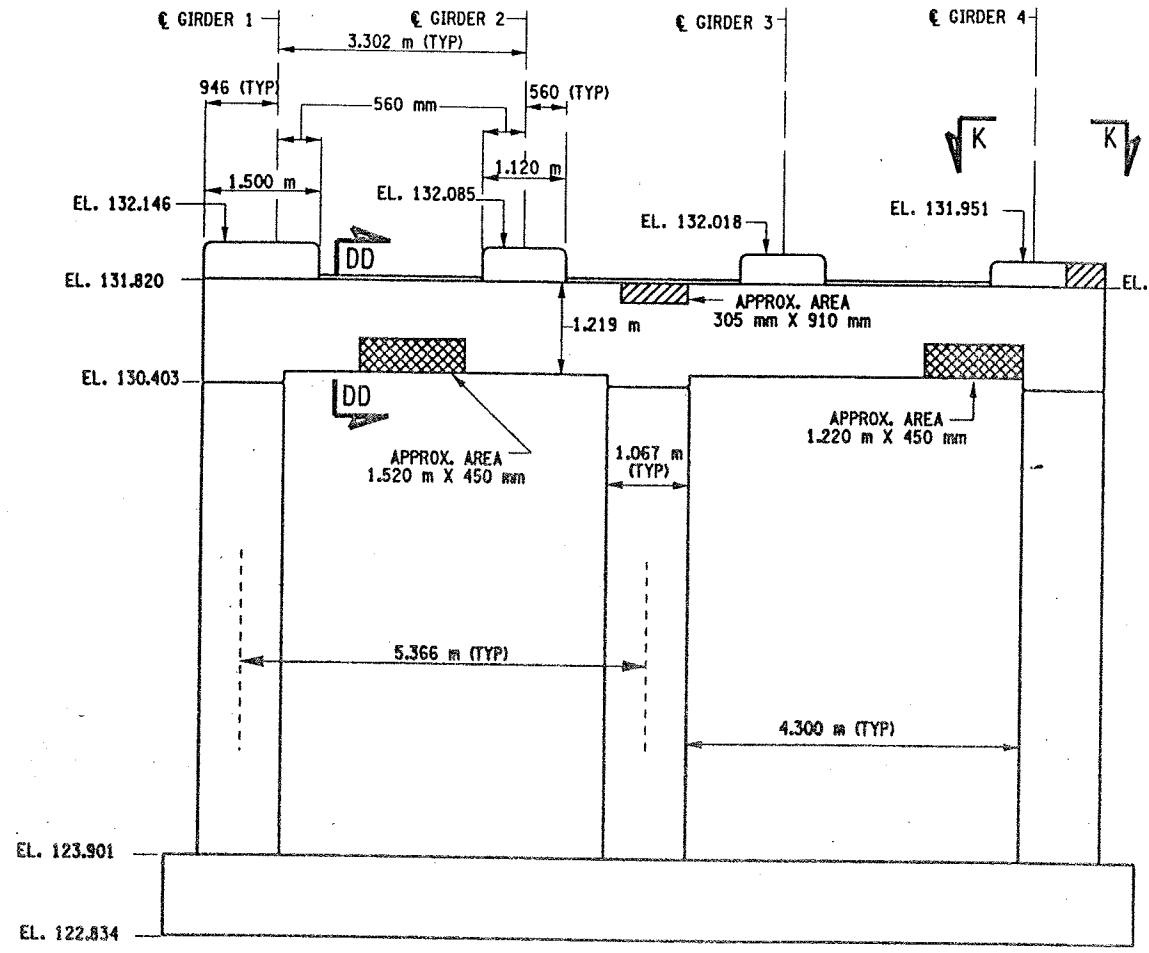

PIER 10 - FRONT FACE (LOOKING NORTH)
BIN 1093572
SCALE: 1 TO 50

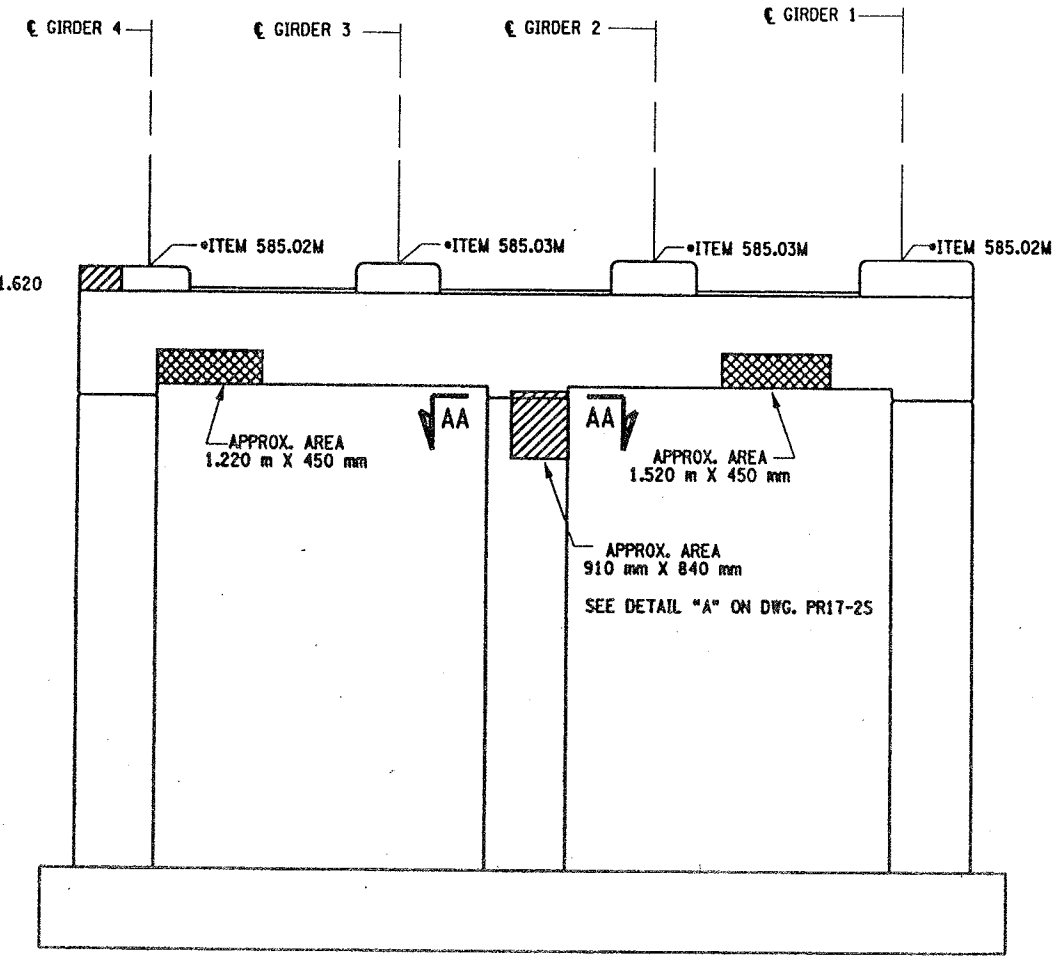

PIER 10 - BACK FACE (LOOKING SOUTH)
BIN 1093572
SCALE: 1 TO 50

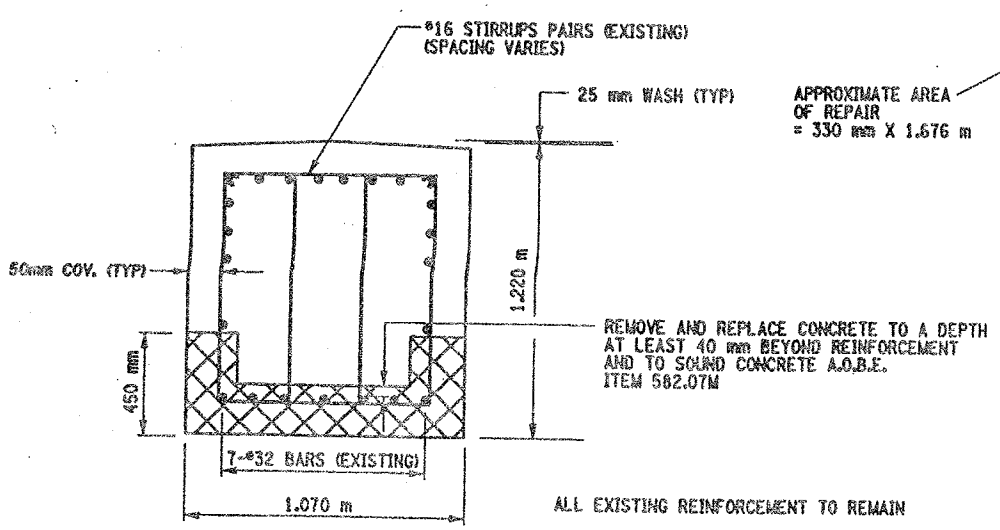

SECTION DD-DD
NOT TO SCALE

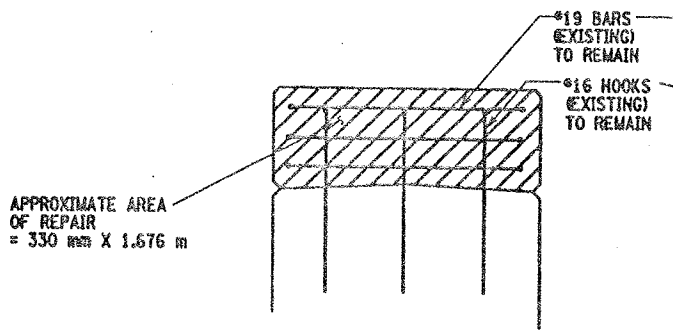

SECTION N-N
NOT TO SCALE

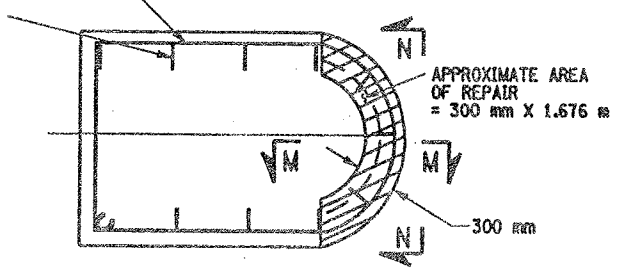

SECTION K-K
NOT TO SCALE

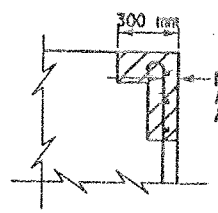

SECTION M-M
NOT TO SCALE

LIST OF ITEMS USED:

ITEM 15565.4302M - BRIDGE BEARING RESTORATION (EA)
ITEM 582.05M - REM. OF STRUC. CONC. - REPLACE WITH CLASS A CONCRETE (CM)
ITEM 582.07M - REM. OF STRUC. CONC. - REPL. W/ VERT. OVERHEAD PATCH MATL. (SM)
ITEM 585.02M - STRUCTURAL LIFTING OPERATIONS - TYPE B (EA)
ITEM 585.03M - STRUCTURAL LIFTING OPERATION - TYPE C (EA)

FED ROAD REG. NO.	STATE	CONTRACT NO.	SHEET NO.	TOTAL SHEETS
1	N.Y.	D259214	325	432

BRIDGE REHABILITATION PROJECT (ELEMENT SPECIFIC)
VARIOUS BRIDGES ON INTERSTATE 481
TOWNS OF DEWITT AND CICERO
ONONDAGA COUNTY
P.I.N. 305613 B.I.N. 1093572

NOTES:

1. ALL REINFORCEMENT TO REMAIN.
2. RESTORE TO ORIGINAL DIMENSIONS.
3. PEDESTALS NUMERICALLY NUMBERED FROM WEST TO EAST.
4. FOR THE CONCRETE REPAIR AREAS, THE CONCRETE SHALL BE REMOVED TO AT LEAST 40mm MIN. BEYOND THE ENCOUNTERED REINFORCEMENT AND TO SOUND CONCRETE, A.O.B.E.
5. ELEVATIONS SHOWN ARE FROM ORIGINAL CONTRACT PLANS F.I.S.H. 70-7 AND ARE FOR REFERENCE ONLY.
6. REMOVAL DIMENSIONS SHOWN ON PLANS ARE ESTIMATED AND SHALL BE FIELD VERIFIED BY THE CONTRACTOR PRIOR TO BEGINNING OF REMOVAL OPERATIONS A.O.B.E.
7. PERFORM BEARING RESTORATION TO ALL EXPANSION BEARINGS (TO INCLUDE RESETTING OF UNDEREXTENDED OR OVEREXTENDED BEARINGS). SEE DWG. PR17-1S FOR BEARING RESTORATION NOTES. SEE DWG. BR-10 & BR-11 FOR BEARING RESTORATION DETAILS.
8. FOR SECTION AA-AA SEE DWG. PR17-7N.
9. ALL CONCRETE REMOVAL SHALL BE SAWCUT TO PRODUCE NEAT REMOVAL LINES. COST TO BE INCLUDED IN THE PRICE BID FOR ITEM 582.05M AND ITEM 582.07M.
10. FOR JACKING NOTES SEE DWG PR17-1S.

• PERFORM STRUCTURAL LIFTING UNDER ITEM 585.02M - STRUCTURAL LIFTING OPERATIONS - TYPE B LIFTING AT A PIER) OR ITEM 585.03M - STRUCTURAL LIFTING OPERATIONS - TYPE C LIFTING AT A PIER WHERE THE CONTRACTOR SHALL BE REQUIRED TO LIFT OFF THE FOOTING AND/OR GROUND LEVEL.

JACKING LOADS:

D.L. = 75 MT
L.L. = 50 MT
TOTAL = 125 MT

LEGEND:

ITEM 582.05M - REMOVAL OF STRUCTURAL CONCRETE- REPLACE WITH CLASS A CONCRETE (CM)

ITEM 582.07M - REMOVAL OF STRUCTURAL CONCRETE - REPLACE WITH VERTICAL OVER-HEAD PATCH MATERIAL. (SM)

ALL DIMENSIONS ARE IN mm UNLESS OTHERWISE NOTED

AS BUILT REVISIONS

SIGNATURE DATE

INTERSTATE 481 NB
OVER
CSX RAILROAD YARD
PIER 10

STATE OF NEW YORK
DEPARTMENT OF TRANSPORTATION

FILENAME	REGION	DATE	DRAWING NO.
305613AE.P10	3	10/02	PR17-10N

DESIGNED BY
DRAFTED BY
CHECKED BY
ESTIMATED BY
JOB MANAGER
DESIGN SUPERVISOR

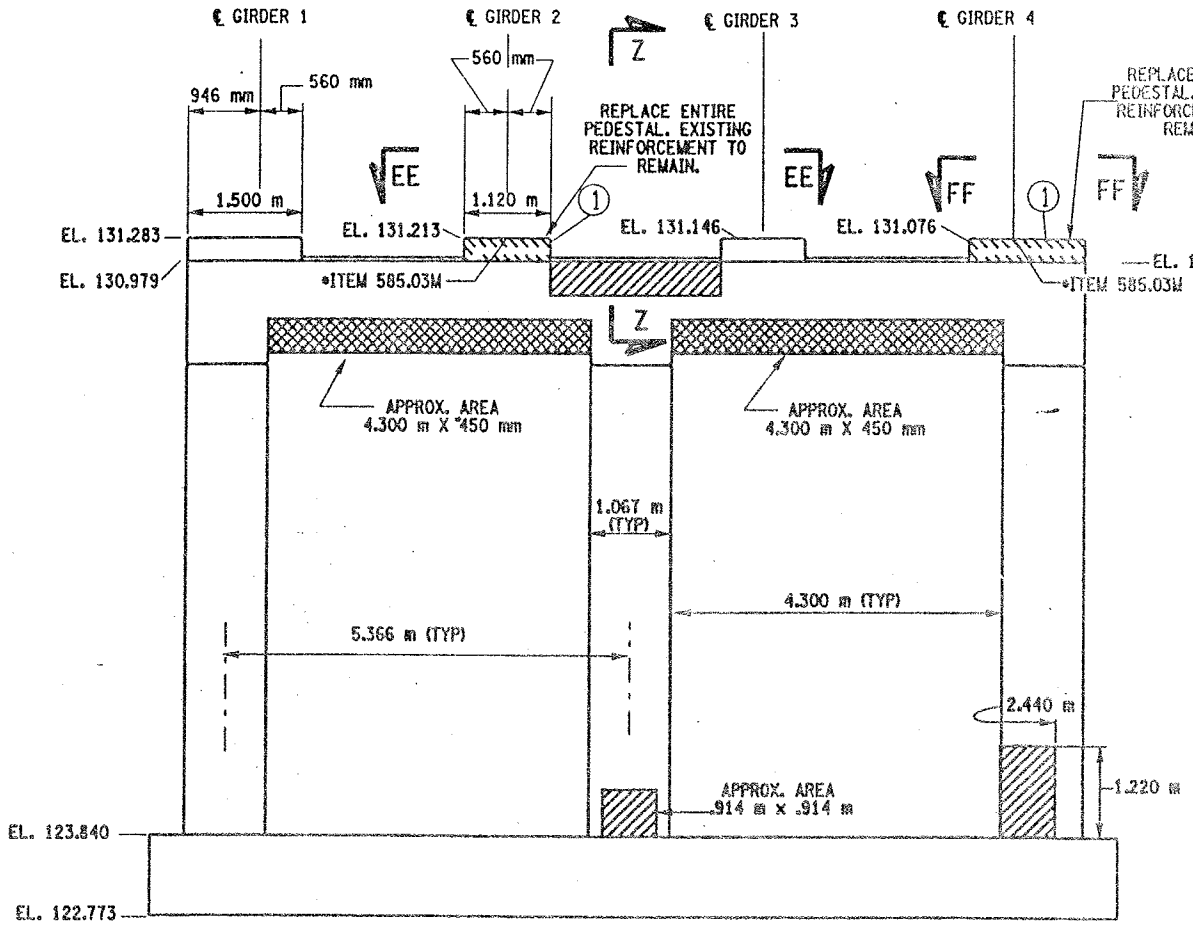

PIER 11 - FRONT FACE (LOOKING NORTH)
BIN 1093572
SCALE: 1 TO 50

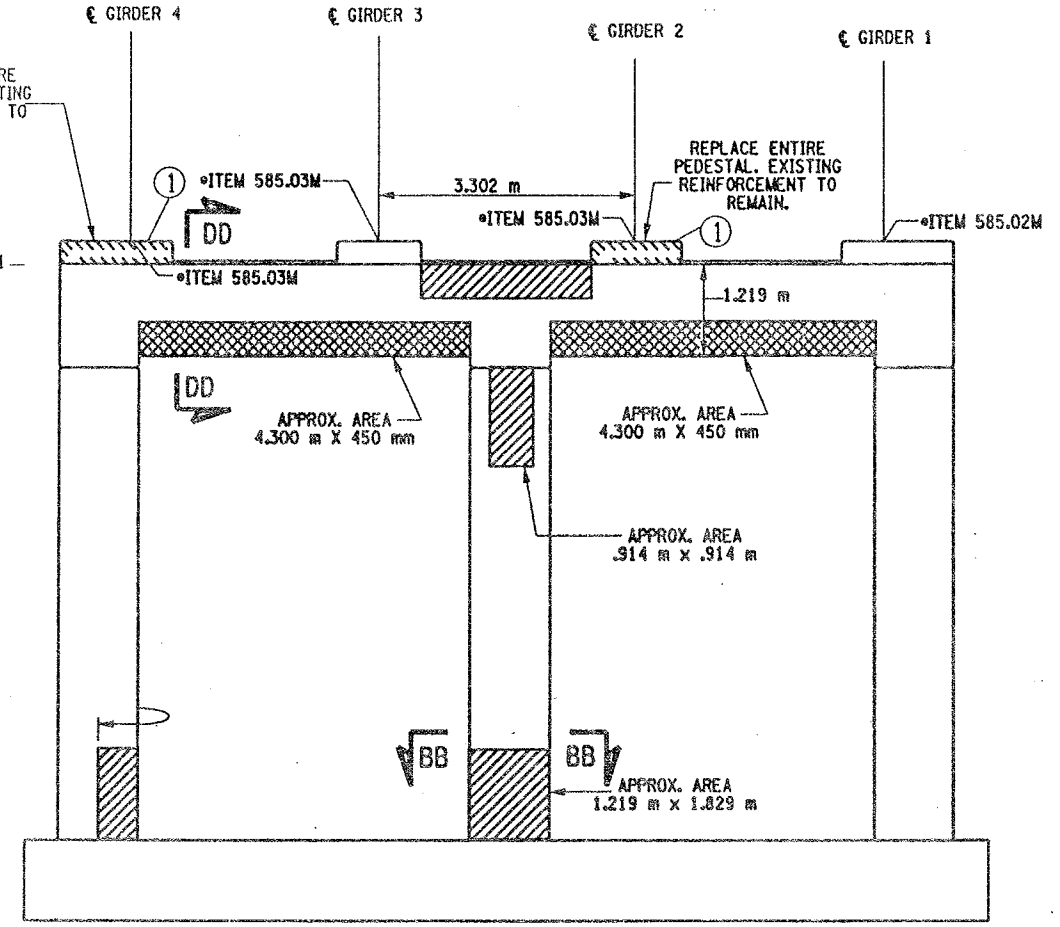

PIER 11- BACK FACE (LOOKING SOUTH)
BIN 1093572
SCALE: 1 TO 50

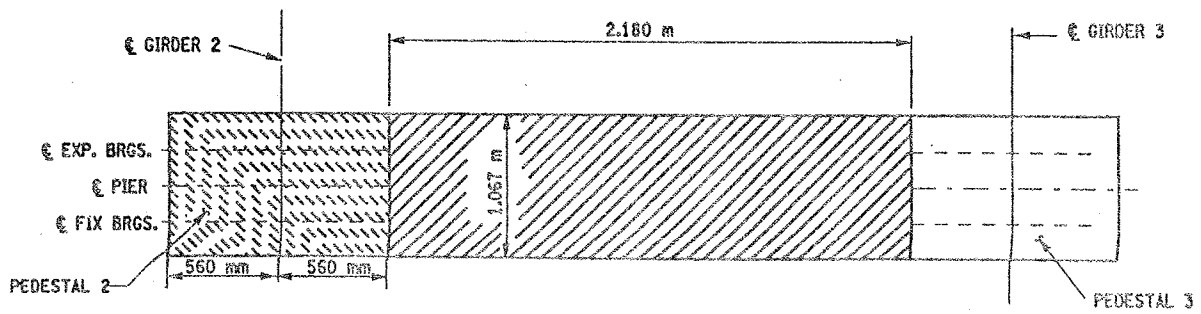

SECTION EE-EE
NOT TO SCALE

CONCRETE TABLE (m³)		
PLACEMENT	QUANTITY	ITEM NO.
1	0.80	555.0105M

(1) INDICATES CONCRETE PLACEMENT NUMBER

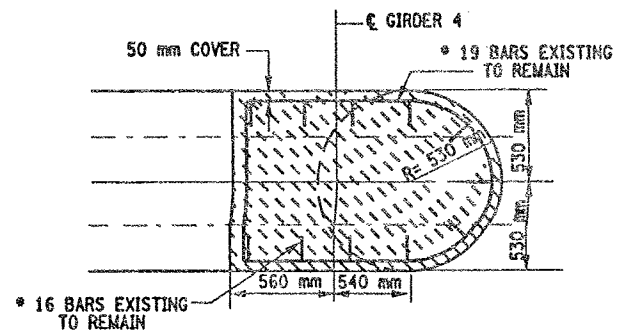

SECTION FF-FF
NOT TO SCALE

LIST OF ITEMS USED

ITEM 555.0105M - CONCRETE FOR STRUCTURES, CLASS A (CM)
ITEM 15565.4302M - BRIDGE BEARING RESTORATION (EA)
ITEM 580.01M - REMOVAL OF STRUCTURAL CONCRETE (CM)
ITEM 582.05M - REM. OF STRUC. CONC. - REPLACE WITH CLASS A CONCRETE (CM)
ITEM 582.07M - REM. OF STRUC. CONC. - REPL. W/ VERT. OVERHEAD PATCH MAT'L (SM)
ITEM 585.02M - STRUCTURAL LIFTING OPERATIONS - TYPE B (EA)
ITEM 585.03M - STRUCTURAL LIFTING OPERATION - TYPE C (EA)

FED ROAD REG. NO.	STATE	CONTRACT NO.	SHEET NO.	TOTAL SHEETS
1	N.Y.	D259214	326	432

BRIDGE REHABILITATION PROJECT (ELEMENT SPECIFIC)
VARIOUS BRIDGES ON INTERSTATE 481
TOWNS OF DEWITT AND CICERO
ONONDAGA COUNTY
P.I.N. 305613 | B.I.N. 1093572

NOTES:

1. ALL REINFORCEMENT TO REMAIN.
2. RESTORE TO ORIGINAL DIMENSIONS.
3. PEDESTALS NUMERICALLY NUMBERED FROM WEST TO EAST.
4. FOR THE CONCRETE REPAIR AREAS, THE CONCRETE SHALL BE REMOVED TO AT LEAST 40mm MIN. BEYOND THE ENCOUNTERED REINFORCEMENT AND TO SOUND CONCRETE, A.O.B.E.
5. ELEVATIONS SHOWN ARE FROM ORIGINAL CONTRACT PLANS F.I.S.H. 70-7 AND ARE FOR REFERENCE ONLY.
6. REMOVAL DIMENSIONS SHOWN ON PLANS ARE ESTIMATED AND SHALL BE FIELD VERIFIED BY THE CONTRACTOR PRIOR TO BEGINNING OF REMOVAL OPERATIONS A.O.B.E.
7. PERFORM BEARING RESTORATION TO ALL EXPANSION BEARINGS (TO INCLUDE RESETTING OF UNDEREXTENDED OR OVEREXTENDED BEARINGS). SEE DWG. PR17-1S FOR BEARING RESTORATION NOTES. SEE DWG. BR-10 & BR-11 FOR BEARING RESTORATION DETAILS.
8. SEE DWG PR17-10N FOR SECTION DD-DD.
9. SEE DWG. PR17-12S FOR SECTION BB-BB.
10. SEE DWG. PR17-7N FOR SECTION Z-Z.
11. PEDESTALS 2 AND 4 SHALL BE REPLACED TO EXISTING DIMENSIONS, ITEM 555.0105 M
12. ALL CONCRETE REMOVAL SHALL BE SAWCUT TO PRODUCE NEAT REMOVAL LINES. COST TO BE INCLUDED IN THE PRICE BID FOR ITEM 582.05M AND ITEM 582.07M.
13. FOR JACKING NOTES SEE DWG PR17-1S.

* PERFORM STRUCTURAL LIFTING UNDER ITEM 585.02M - STRUCTURAL LIFTING OPERATIONS - TYPE B (LIFTING AT A PIER) OR ITEM 585.03M - STRUCTURAL LIFTING OPERATIONS - TYPE C (LIFTING AT A PIER WHERE THE CONTRACTOR SHALL BE REQUIRED TO LIFT OFF THE FOOTING AND/OR GROUND LEVEL.

JACKING LOADS:

D.L. = 75 MT
L.L. = 50 MT
TOTAL = 125 MT

LEGEND:

ITEM 582.05M - REMOVAL OF STRUCTURAL CONCRETE- REPLACE WITH CLASS A CONCRETE. (CM)

ITEM 582.07M - REMOVAL OF STRUCTURAL CONCRETE - REPLACE WITH VERTICAL OVERHEAD PATCH MATERIAL. (SM)

ITEM 580.01 M - REMOVAL OF STRUCTURAL CONCRETE. (CM) AND ITEM 555.0105 M - CONCRETE FOR STRUCTURES CLASS A. (CM)

ALL DIMENSIONS ARE IN mm UNLESS OTHERWISE NOTED

AS BUILT REVISIONS

SIGNATURE DATE

INTERSTATE 481 NB
OVER
CSX RAILROAD YARD
PIER 11

STATE OF NEW YORK
DEPARTMENT OF TRANSPORTATION

FILENAME	REGION	DATE	DRAWING NO.
305613AE_P11	3	10/02	PR17-11N

DESIGN SUPERVISOR ____ JOB MANAGER ____ DESIGNED BY ____ ESTIMATED BY ____ DRAFTED BY ____ CHECKED BY ____ CHECKED BY

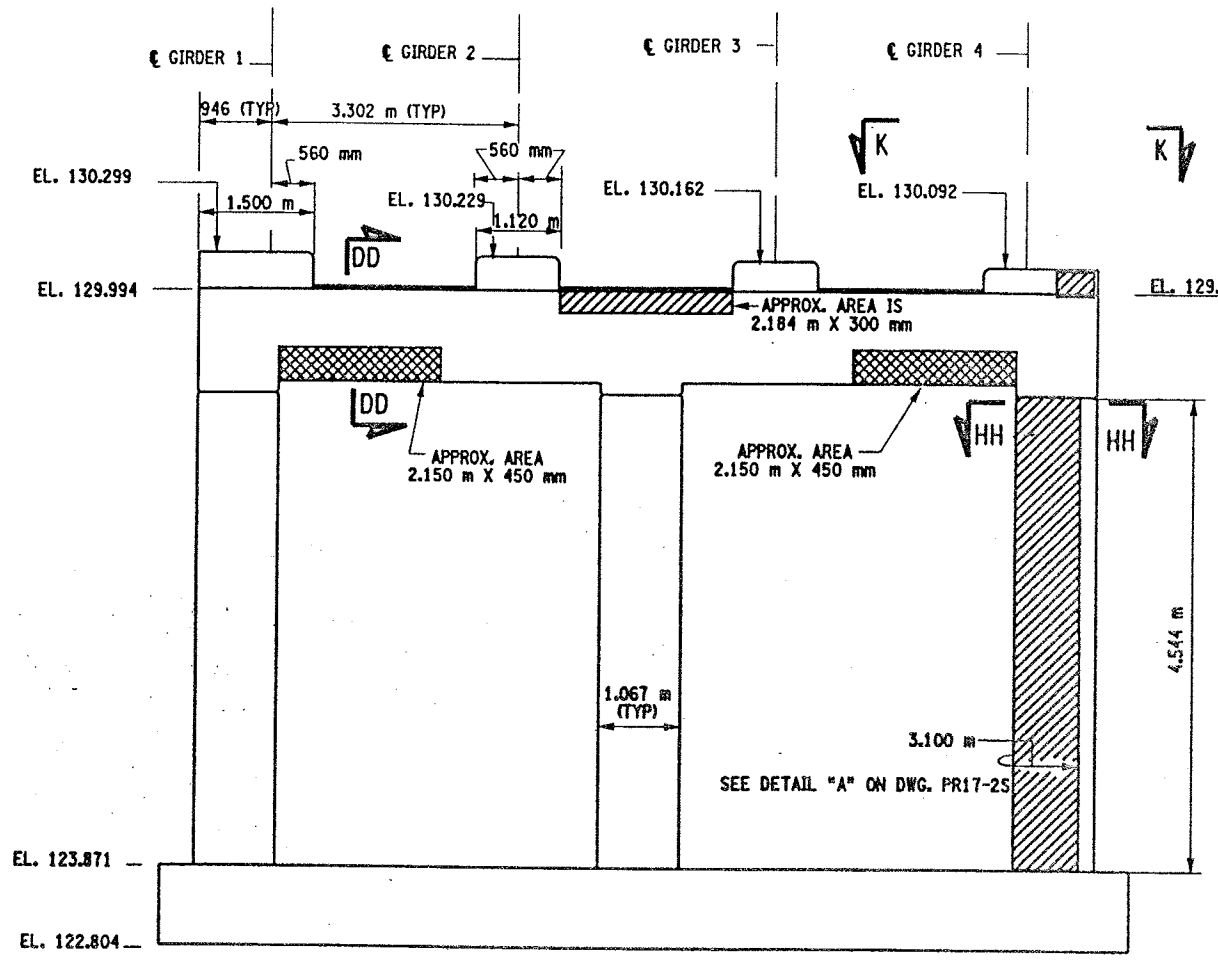

PIER 12 - FRONT FACE (LOOKING NORTH)

BIN 1093572

SCALE: 1 TO 50

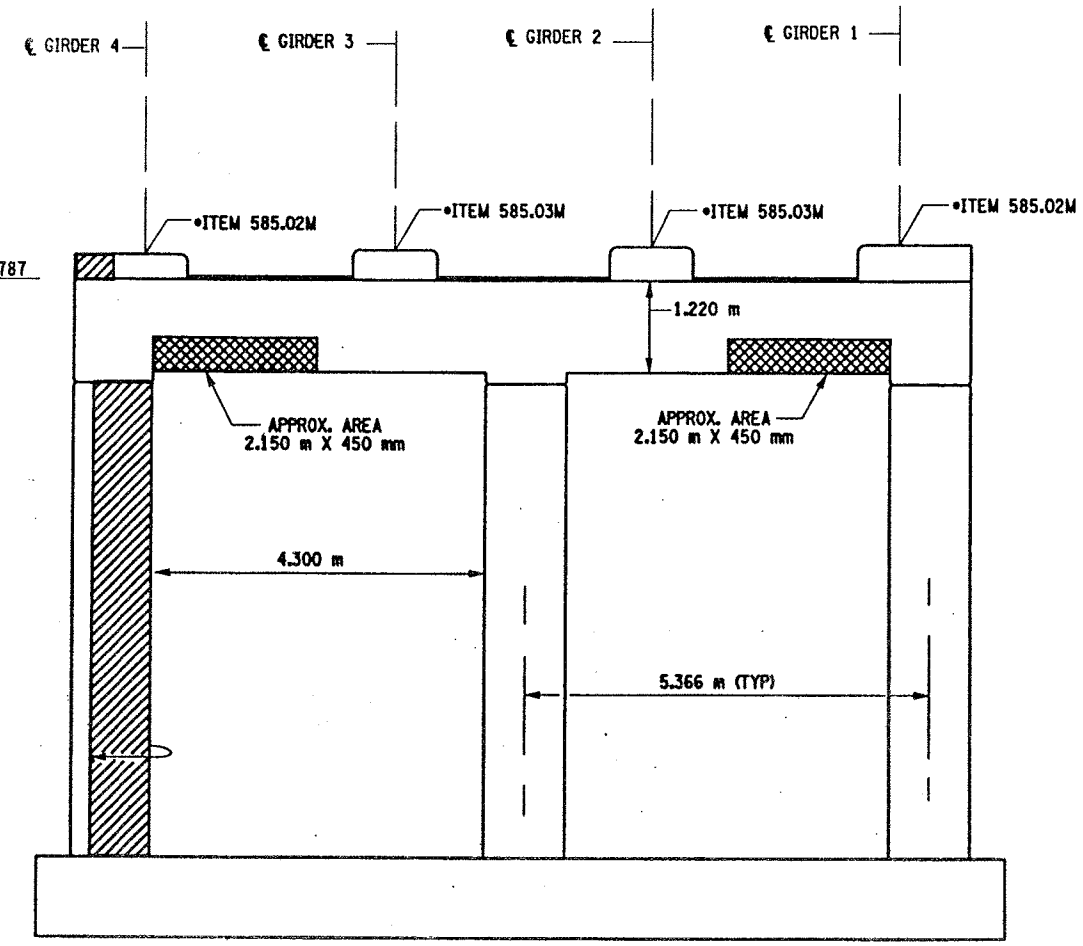

PIER 12 - BACK FACE (LOOKING SOUTH)

BIN 1093572

SCALE: 1 TO 50

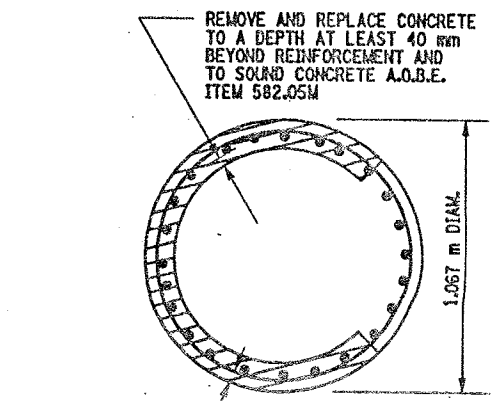

SECTION HH-HH

NOT TO SCALE

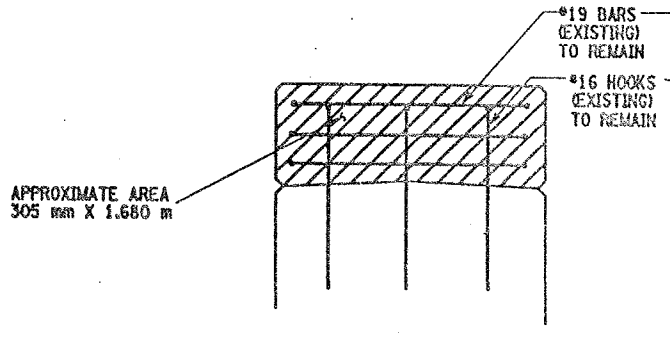

SECTION N-N

NOT TO SCALE

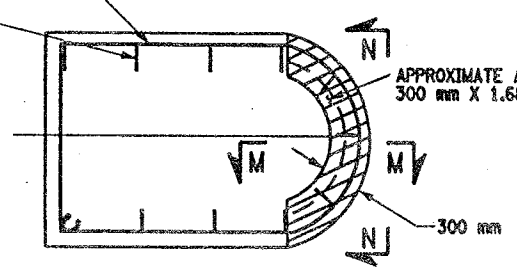

SECTION K-K

NOT TO SCALE

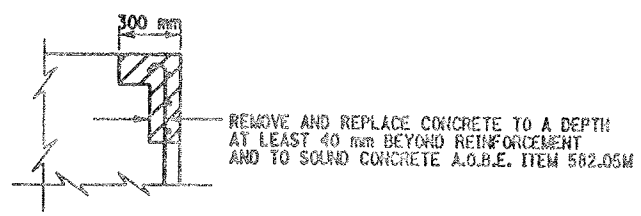

SECTION M-M

NOT TO SCALE

LIST OF ITEMS USED:

ITEM 15565.4302M - BRIDGE BEARING RESTORATION (EA)
ITEM 582.05M - REM. OF STRUC. CONC. - REPLACE WITH CLASS A CONCRETE (CM)
ITEM 582.07M - REM. OF STRUC. CONC. - REPL. W/ VERT. OVERHEAD PATCH MAT'L (SM)
ITEM 585.02M - STRUCTURAL LIFTING OPERATIONS - TYPE B (EA)
ITEM 585.03M - STRUCTURAL LIFTING OPERATION - TYPE C (EA)

FED ROAD REG. NO.	STATE	CONTRACT NO.	SHEET NO.	TOTAL SHEETS
1	N.Y.	D259214	327	432

BRIDGE REHABILITATION PROJECT (ELEMENT SPECIFIC)
VARIOUS BRIDGES ON INTERSTATE 481
TOWNS OF DEWITT AND CICERO
ONONDAGA COUNTY
P.I.N. 305613 B.I.N. 1093572

NOTES:

1. ALL REINFORCEMENT TO REMAIN.
2. RESTORE TO ORIGINAL DIMENSIONS.
3. PEDESTALS NUMERICALLY NUMBERED FROM WEST TO EAST.
4. FOR THE CONCRETE REPAIR AREAS, THE CONCRETE SHALL BE REMOVED TO AT LEAST 40mm MIN. BEYOND THE ENCOUNTERED REINFORCEMENT AND TO SOUND CONCRETE, A.O.B.E.
5. ELEVATIONS SHOWN ARE FROM ORIGINAL CONTRACT PLANS F.I.S.H. 70-7 AND ARE FOR REFERENCE ONLY.
6. REMOVAL DIMENSIONS SHOWN ON PLANS ARE ESTIMATED AND SHALL BE FIELD VERIFIED BY THE CONTRACTOR PRIOR TO BEGINNING OF REMOVAL OPERATIONS A.O.B.E.
7. PERFORM BEARING RESTORATION TO ALL EXPANSION BEARINGS (TO INCLUDE RESETTING OF UNDEREXTENDED OR OVEREXTENDED BEARINGS). SEE DWG. PR17-1S FOR BEARING RESTORATION NOTES. SEE DWG. BR-10 & BR-11 FOR BEARING RESTORATION DETAILS.
8. SEE DWG PR17-10N FOR SECTION DD-DD.
9. ALL CONCRETE REMOVAL SHALL BE SAWCUT TO PRODUCE NEAT REMOVAL LINES. COST TO BE INCLUDED IN THE PRICE BID FOR ITEM 582.05M AND 582.07M.
10. FOR JACKING NOTES SEE DWG PR17-1S.

• PERFORM STRUCTURAL LIFTING UNDER ITEM 585.02M - STRUCTURAL LIFTING OPERATIONS - TYPE B (LIFTING AT A PIER) OR ITEM 585.03M - STRUCTURAL LIFTING OPERATIONS - TYPE C (LIFTING AT A PIER WHERE THE CONTRACTOR SHALL BE REQUIRED TO LIFT OFF THE FOOTING AND/OR GROUND LEVEL.

JACKING LOADS:

D.L. = 75 MT
L.L. = 50 MT
TOTAL = 125 MT

LEGEND:

ITEM 582.05M - REMOVAL OF STRUCTURAL CONCRETE- REPLACE WITH CLASS A CONCRETE. (CM)

ITEM 582.07M - REMOVAL OF STRUCTURAL CONCRETE - REPLACE WITH VERTICAL OVER-HEAD PATCH MATERIAL. (SM)

ALL DIMENSIONS ARE IN mm UNLESS OTHERWISE NOTED

AS BUILT REVISIONS

SIGNATURE DATE

INTERSTATE 481 NB
OVER
CSX RAILROAD YARD
PIER 12

STATE OF NEW YORK
DEPARTMENT OF TRANSPORTATION

FILENAME	REGION	DATE	DRAWING NO.
305613AE.P12	3	10/02	PR17-12N

DESIGN SUPERVISOR ____ JOB MANAGER ____ DESIGNED BY ____ DRAFTED BY ____ ESTIMATED BY ____ CHECKED BY ____ CHECKED BY

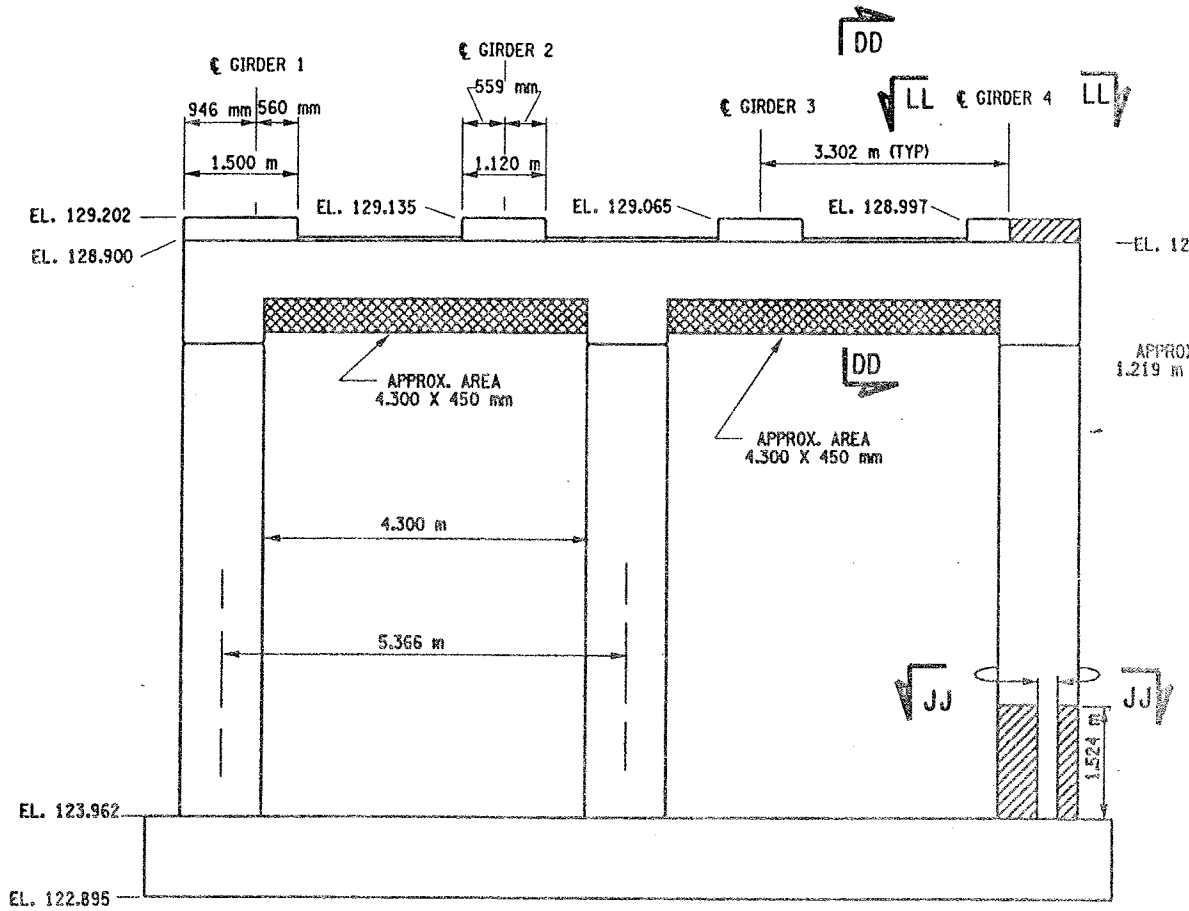

PIER 13 - FRONT FACE (LOOKING NORTH)
BIN 1093572
SCALE: 1 TO 50

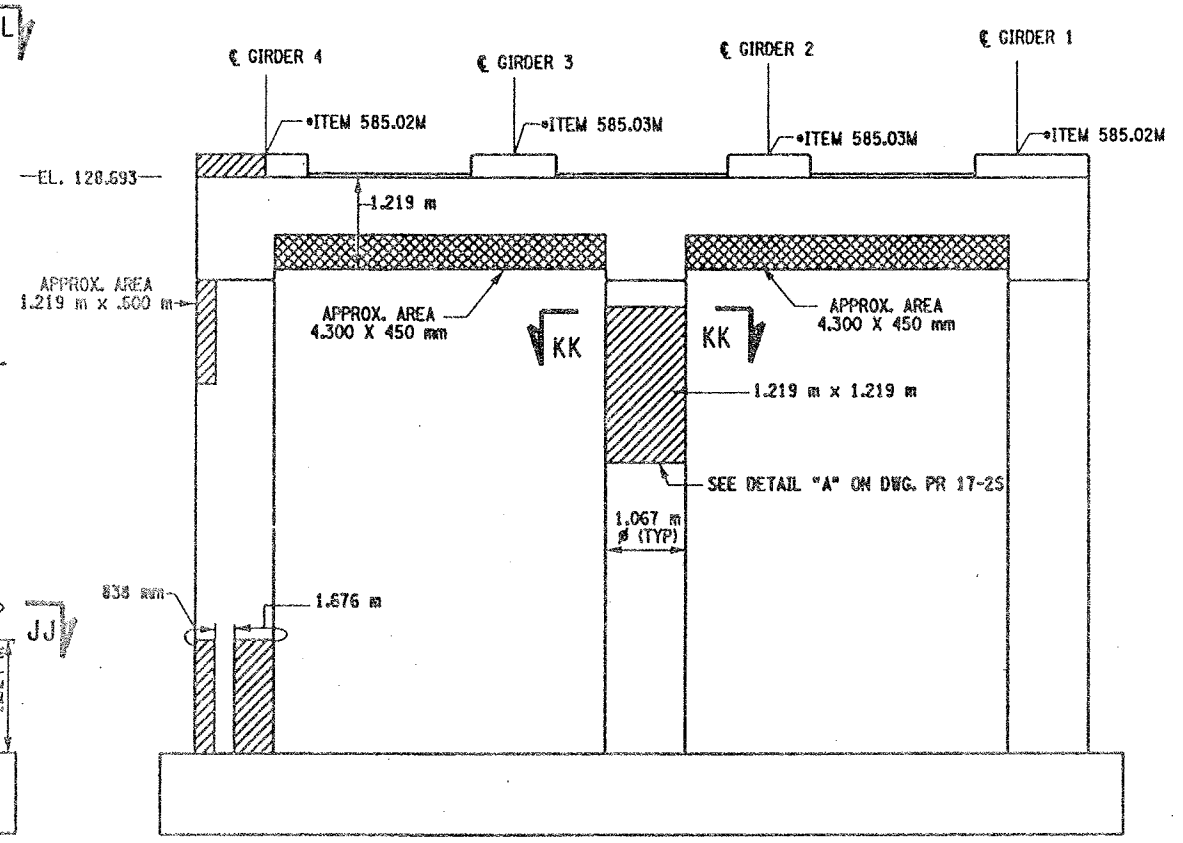

PIER 13- BACK FACE (LOOKING SOUTH)
BIN 1093572
SCALE: 1 TO 50

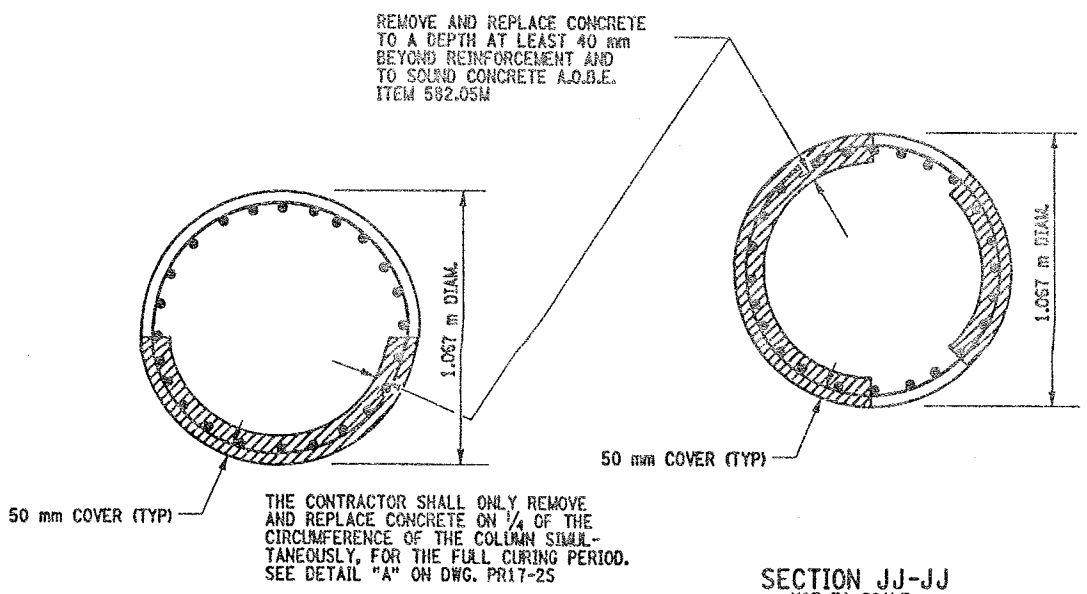

SECTION KK-KK

NOT TO SCALE

SECTION JJ-JJ
NOT TO SCALE

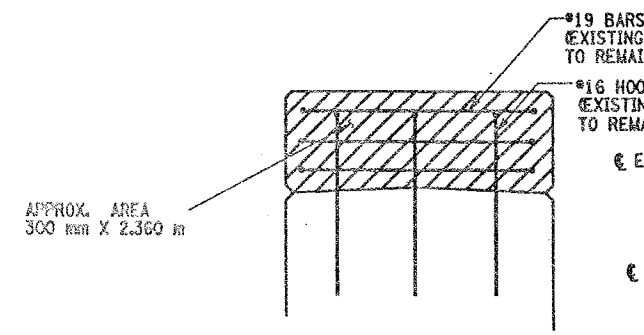

SECTION N-N
NOT TO SCALE

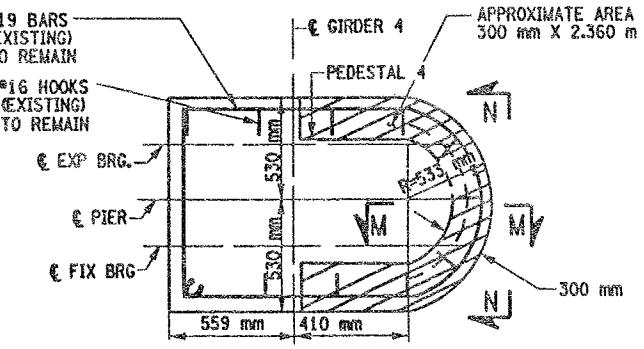

SECTION LL- LL
NOT TO SCALE

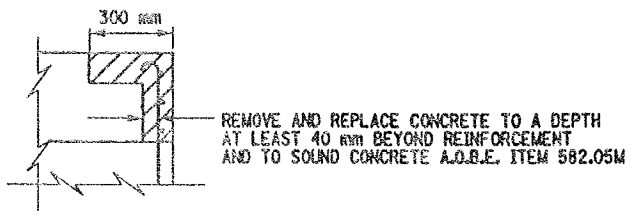

SECTION M-M
NOT TO SCALE

LIST OF ITEMS USED:

ITEM 15565.4302M - BRIDGE BEARING RESTORATION (EA)
ITEM 582.05M - REM. OF STRUC. CONC. - REPLACE WITH CLASS A CONCRETE (CM)
ITEM 582.07M - REM. OF STRUC. CONC. - REPL. W/ VERT. OVERHEAD PATCH MAT'L (SM)
ITEM 585.02M - STRUCTURAL LIFTING OPERATIONS - TYPE B (EA)
ITEM 585.03M - STRUCTURAL LIFTING OPERATION - TYPE C (EA)

FED ROAD REG. NO.	STATE	CONTRACT NO.	SHEET NO.	TOTAL SHEETS
1	N.Y.	D259214	328	432

BRIDGE REHABILITATION PROJECT (ELEMENT SPECIFIC)
VARIOUS BRIDGES ON INTERSTATE 481
TOWNS OF DEWITT AND CICERO
ONONDAGA COUNTY
P.I.N. 305613 B.I.N. 1093572

NOTES:

1. ALL REINFORCEMENT TO REMAIN.
2. RESTORE TO ORIGINAL DIMENSIONS.
3. PEDESTALS NUMERICALLY NUMBERED FROM WEST TO EAST.
4. FOR THE CONCRETE REPAIR AREAS, THE CONCRETE SHALL BE REMOVED TO AT LEAST 40mm MIN. BEYOND THE ENCOUNTERED REINFORCEMENT AND TO SOUND CONCRETE, A.O.B.E.
5. ELEVATIONS SHOWN ARE FROM ORIGINAL CONTRACT PLANS F.I.S.H. 70-7 AND ARE FOR REFERENCE ONLY.
6. REMOVAL DIMENSIONS SHOWN ON PLANS ARE ESTIMATED AND SHALL BE FIELD VERIFIED BY THE CONTRACTOR PRIOR TO BEGINNING OF REMOVAL OPERATIONS A.O.B.E.
7. PERFORM BEARING RESTORATION TO ALL EXPANSION BEARINGS (TO INCLUDE RESETTING OF UNDEREXTENDED OR OVEREXTENDED BEARINGS). SEE DWG. PR17-1S FOR BEARING RESTORATION NOTES. SEE DWG. BR-10 & BR-11 FOR BEARING RESTORATION DETAILS.
8. SEE DWG. PR 17-10N FOR SECTION DD-DD.
9. ALL CONCRETE REMOVAL SHALL BE SAWCUT TO PRODUCE NEAT REMOVAL LINES. COST TO BE INCLUDED IN THE PRICE BID FOR ITEM 582.05M AND 582.07M.
10. FOR JACKING NOTES SEE DWG PR17-1S.

• PERFORM STRUCTURAL LIFTING UNDER ITEM 585.02M - STRUCTURAL LIFTING OPERATIONS - TYPE B (LIFTING AT A PIER) OR ITEM 585.03M - STRUCTURAL LIFTING OPERATIONS - TYPE C (LIFTING AT A PIER WHERE THE CONTRACTOR SHALL BE REQUIRED TO LIFT OFF THE FOOTING AND/OR GROUND LEVEL.

JACKING LOADS:

D.L. = 75 MT
L.L. = 50 MT
TOTAL = 125 MT

LEGEND:

ITEM 582.05M - REMOVAL OF STRUCTURAL CONCRETE- REPLACE WITH CLASS A CONCRETE. (CM)

ITEM 582.07M - REMOVAL OF STRUCTURAL CONCRETE - REPLACE WITH VERTICAL OVER-HEAD PATCH MATERIAL. (SM)

ALL DIMENSIONS ARE IN mm UNLESS OTHERWISE NOTED

AS BUILT REVISIONS

SIGNATURE DATE

INTERSTATE 481 NB
OVER
CSX RAILROAD YARD
PIER 13

STATE OF NEW YORK
DEPARTMENT OF TRANSPORTATION

FILENAME	REGION	DATE	DRAWING NO.
305613AE.P13	3	10/02	PR17-13N

DESIGN SUPERVISOR ____ JOB MANAGER ____ DESIGNED BY ____ CHECKED BY ____ ESTIMATED BY ____ DRAFTED BY ____ CHECKED BY ____

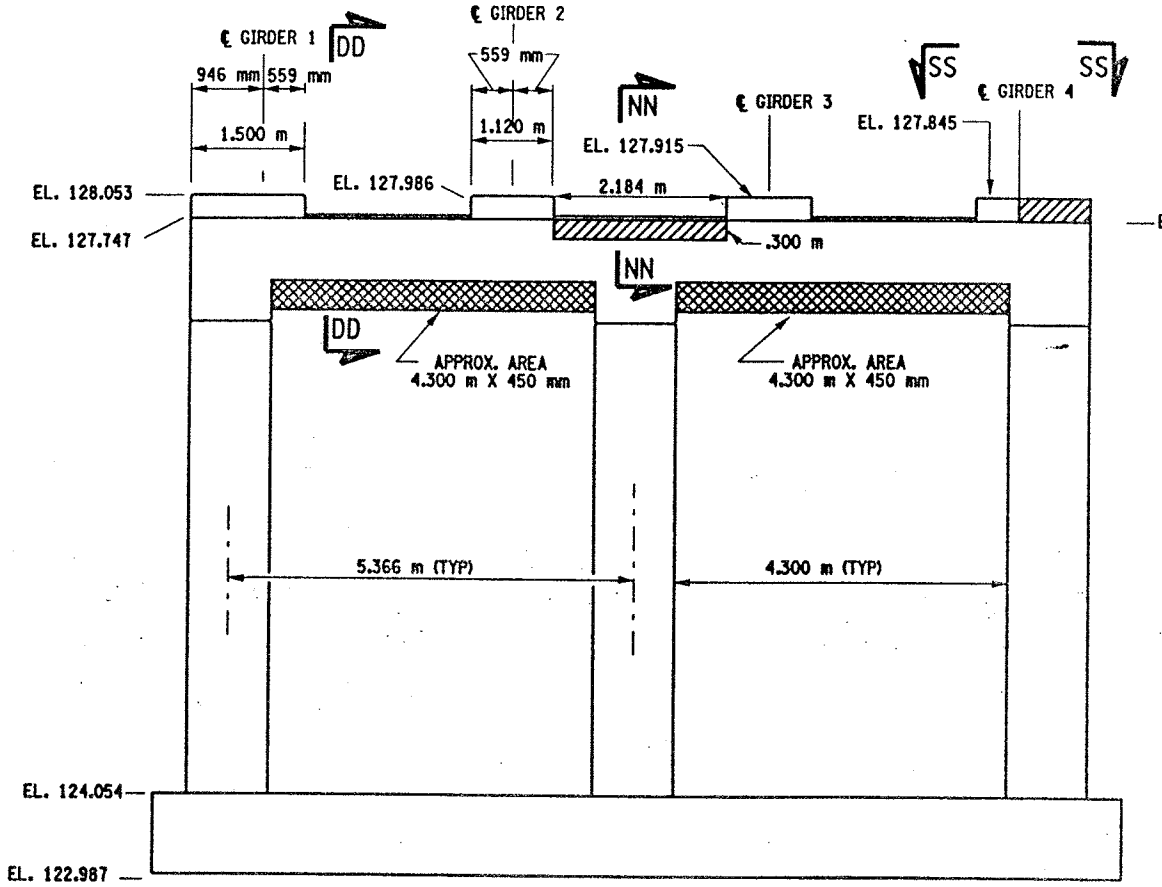

PIER 14 - FRONT FACE (LOOKING NORTH)
BIN 1093572
SCALE: 1 TO 50

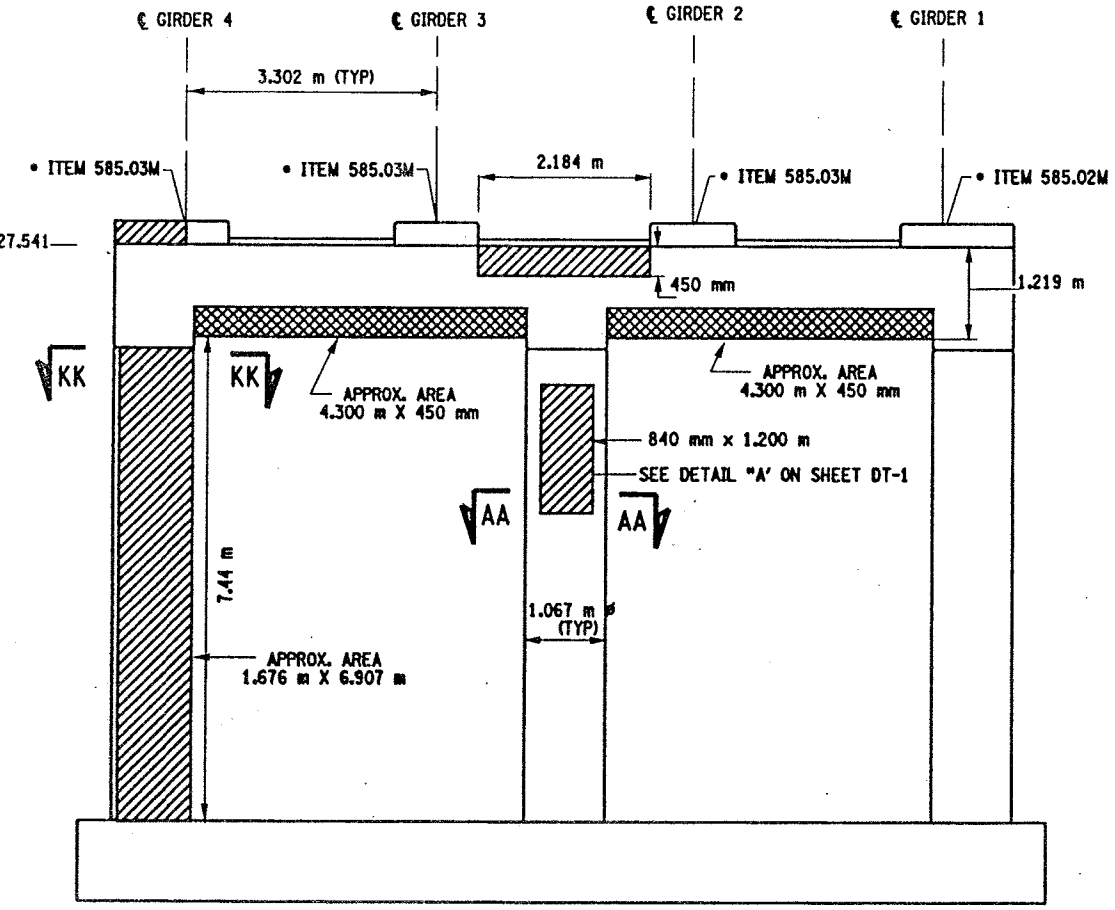

PIER 14 - BACK FACE (LOOKING SOUTH)
BIN 1093572
SCALE: 1 TO 50

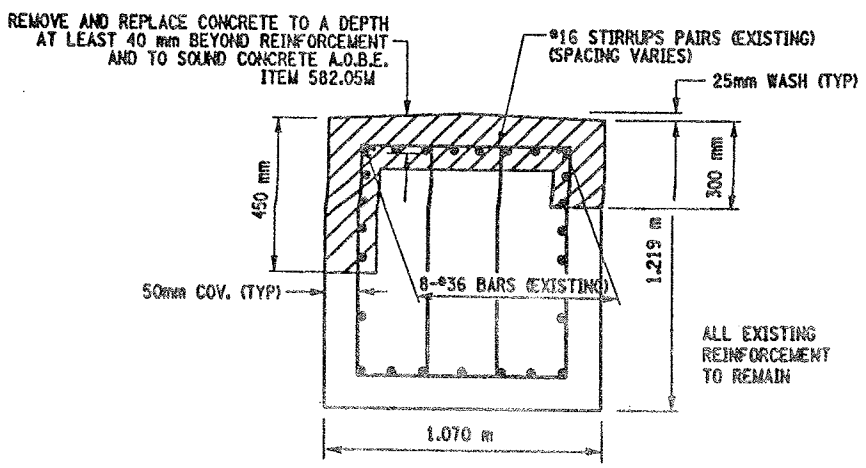

SECTION NN-NN
NOT TO SCALE

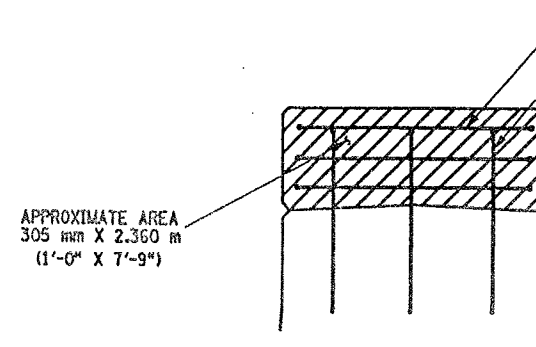

SECTION N-N
NOT TO SCALE

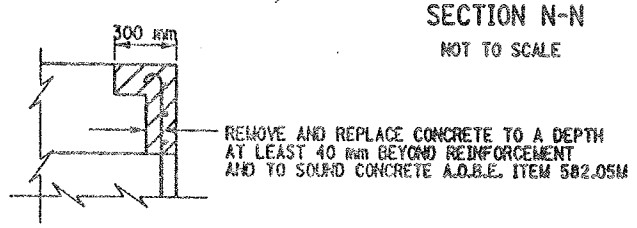

SECTION M-M
NOT TO SCALE

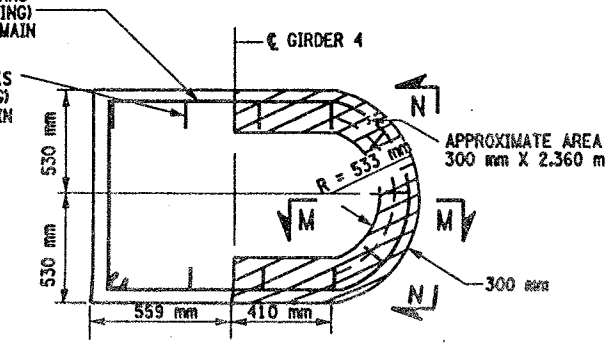

SECTION SS-SS
NOT TO SCALE

LIST OF ITEMS USED:

ITEM 15565.4302M - BRIDGE BEARING RESTORATION (EA)
ITEM 582.05M - REM. OF STRUC. CONC. - REPLACE WITH CLASS A CONCRETE (CM)
ITEM 582.07M - REM. OF STRUC. CONC. - REPL. W/ VERT. OVERHEAD PATCH MAT'L (SM)
ITEM 585.02M - STRUCTURAL LIFTING OPERATIONS - TYPE B (EA)
ITEM 585.03M - STRUCTURAL LIFTING OPERATION - TYPE C (EA)

FED ROAD REG. NO.	STATE	CONTRACT NO.	SHEET NO.	TOTAL SHEETS
1	N.Y.	D259214	329	432

BRIDGE REHABILITATION PROJECT (ELEMENT SPECIFIC)
VARIOUS BRIDGES ON INTERSTATE 481
TOWNS OF DEWITT AND CICERO
ONONDAGA COUNTY
P.I.N. 305613 B.I.N. 1093572

NOTES:

1. ALL REINFORCEMENT TO REMAIN.
2. RESTORE TO ORIGINAL DIMENSIONS.
3. PEDESTALS NUMERICALLY NUMBERED FROM WEST TO EAST.
4. FOR THE CONCRETE REPAIR AREAS, THE CONCRETE SHALL BE REMOVED TO AT LEAST 40mm MIN. BEYOND THE ENCOUNTERED REINFORCEMENT AND TO SOUND CONCRETE, A.O.B.E.
5. ELEVATIONS SHOWN ARE FROM ORIGINAL CONTRACT PLANS F.I.S.H. 70-7 AND ARE FOR REFERENCE ONLY.
6. REMOVAL DIMENSIONS SHOWN ON PLANS ARE ESTIMATED AND SHALL BE FIELD VERIFIED BY THE CONTRACTOR PRIOR TO BEGINNING OF REMOVAL OPERATIONS A.O.B.E.
7. PERFORM BEARING RESTORATION TO ALL EXPANSION BEARINGS (TO INCLUDE RESETTING OF UNDEREXTENDED OR OVEREXTENDED BEARINGS). SEE DWG. PR17-1S FOR BEARING RESTORATION NOTES. SEE DWG. BR-10 & BR-11 FOR BEARING RESTORATION DETAILS.
8. SEE DWG. PR17-10N FOR SECTION DD-DD.
9. SEE DWG. PR17-7N FOR SECTION AA-AA.
10. SEE DWG. PR17-13N FOR SECTION KK-KK.
11. ALL CONCRETE REMOVAL SHALL BE SAWCUT TO PRODUCE NEAT REMOVAL LINES. COST TO BE INCLUDED IN THE PRICE BID FOR ITEM 582.05M AND ITEM 582.07M.
12. FOR JACKING NOTES SEE DWG PR17-1S.

• PERFORM STRUCTURAL LIFTING UNDER ITEM 585.02M - STRUCTURAL LIFTING OPERATIONS - TYPE B (LIFTING AT A PIER) OR ITEM 585.03M - STRUCTURAL LIFTING OPERATIONS - TYPE C (LIFTING AT A PIER WHERE THE CONTRACTOR SHALL BE REQUIRED TO LIFT OFF THE FOOTING AND/OR GROUND LEVEL.

JACKING LOADS:

D.L. = 75 MT
L.L. = 50 MT
TOTAL = 125 MT

LEGEND:

ITEM 582.05M - REMOVAL OF STRUCTURAL CONCRETE- REPLACE WITH CLASS A CONCRETE. (CM)

ITEM 582.07M - REMOVAL OF STRUCTURAL CONCRETE - REPLACE WITH VERTICAL OVERHEAD PATCH MATERIAL. (SM)

ALL DIMENSIONS ARE IN mm UNLESS OTHERWISE NOTED

AS BUILT REVISIONS

SIGNATURE DATE

INTERSTATE 481 NB
OVER
CSX RAILROAD YARD
PIER 14

STATE OF NEW YORK
DEPARTMENT OF TRANSPORTATION

FILENAME	REGION	DATE	DRAWING NO.
305613AE_P14	3	10/02	PR17-14N

DESIGN SUPERVISOR ____ JOB MANAGER ____ DESIGNED BY ____ ESTIMATED BY ____ DRAFTED BY ____ CHECKED BY ____ CHECKED BY

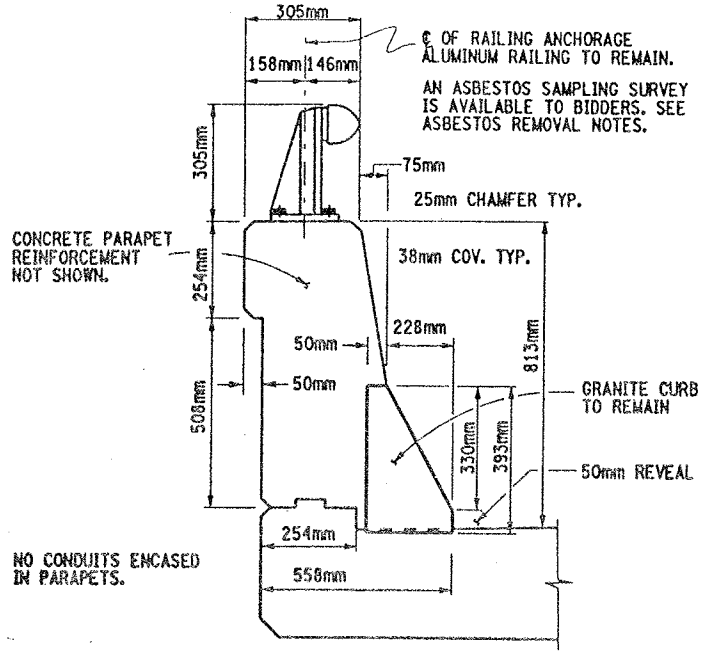

TYPICAL SECTION THRU SUPERSTRUCTURE
PARAPET CONCRETE DETAILS

NOT TO SCALE

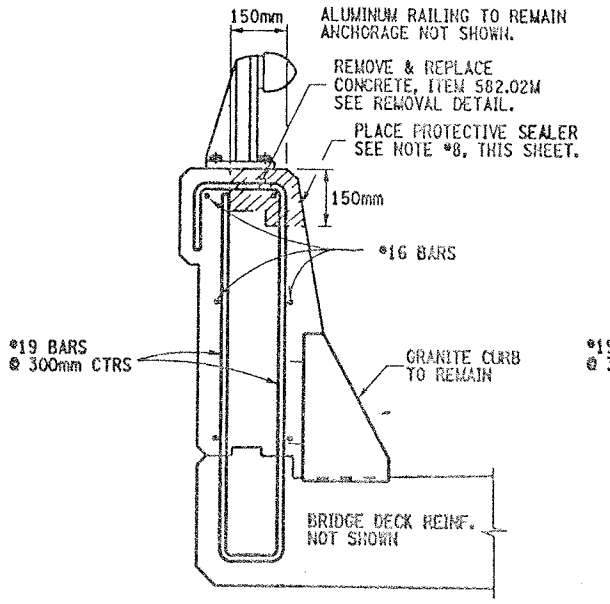

(I) REPAIR DETAILS
150mmX150mm TOP

NOT TO SCALE

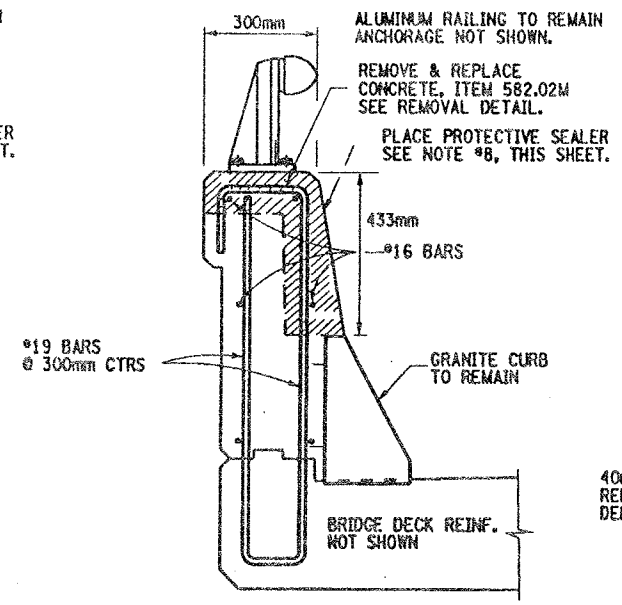

(II) REPAIR DETAILS
FULL TOP & FRONT FACE

NOT TO SCALE

CONCRETE REMOVAL NOTES:

REMOVE ALL DETERIORATED CONCRETE TO SOUND CONCRETE AND AT LEAST 40mm BEYOND ENCOUNTERED REINFORCEMENT BARS, AOBE. PAYMENT TO BE PAID UNDER ITEM 582.05M.

CONCRETE REMOVAL, SAWCUT 6mm DEPTH MINIMUM TO PRODUCE NEAT REMOVAL LINES, ALL COSTS SHALL BE INCLUDED IN PRICE BID FOR ITEM 582.05M.

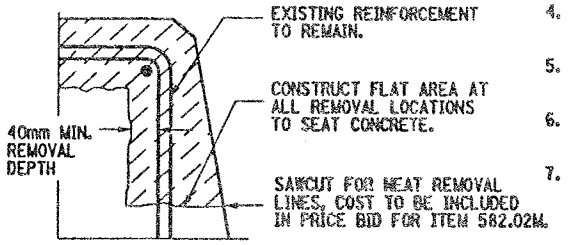

TYPICAL REMOVAL DETAIL

NOT TO SCALE

FED ROAD REG. NO.	STATE	CONTRACT NO.	SHEET NO.	TOTAL SHEETS
1	N.Y.	D259214	330	432

BRIDGE REHABILITATION PROJECT (ELEMENT SPECIFIC)
VARIOUS BRIDGES ON INTERSTATE 481
TOWNS OF DEWITT AND CICERO
ONONDAGA COUNTY
P.I.N. 305613 B.I.N. 1093571 & 1093572

CONCRETE PARAPET REPAIR NOTES:

1. ALUMINUM RAILING TO REMAIN, ANCHORAGE NOT SHOWN.
2. EXISTING PARAPET REINFORCEMENT TO REMAIN.
3. GRANITE CURB TO REMAIN, ANCHOR BARS NOT SHOWN.
4. REMOVAL OF CONCRETE TO LIMITS SHOWN, AOBE. SEE TYPICAL REMOVAL DETAIL, THIS SHEET.
5. ALL DIMENSIONS SHOWN FOR CONCRETE REMOVAL ARE APPROXIMATE AND SHALL BE FIELD VERIFIED.
6. CONTRACTOR SHALL RESTORE CONCRETE PARAPET TO ORIGINAL DIMENSIONS.
7. IT IS DESIRABLE TO RETAIN ALL EXISTING GRANITE CURB, BUT AT SOME LOCATIONS ADJACENT TO THE JOINT BLOCK-OUTS IT MAY BE NECESSARY TO REPLACE OR REPAIR THE SECTION OF CURB, TO THE SATISFACTION OF THE ENGINEER. COST TO BE INCLUDE IN PRICE BID FOR ITEM 582.05M.
8. AFTER PARAPET REPAIRS ARE COMPLETED AND SUFFICIENT CURE TIME AS DECIDED BY ENGINEER, APPLY A COATING TYPE PROTECTIVE SEALERS WHICH MEETS MATERIAL SPECIFICATION 717-04. THIS PROTECTIVE SEALER SHALL BE APPLIED TO THE FRONT FACE AND TOP OF ALL PARAPETS (REPAIRED AREAS & ORIGINAL AREAS) TO ENSURE A UNIFORMED APPEARANCE. COST OF THIS SEALER TO BE INCLUDED IN PRICE BID FOR ITEM 18559.1696 M.

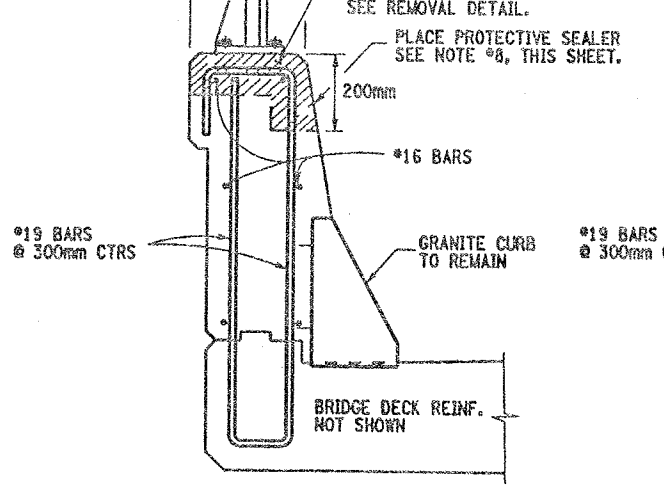

(III) REPAIR DETAILS
FULL TOP & 200mm FACE

NOT TO SCALE

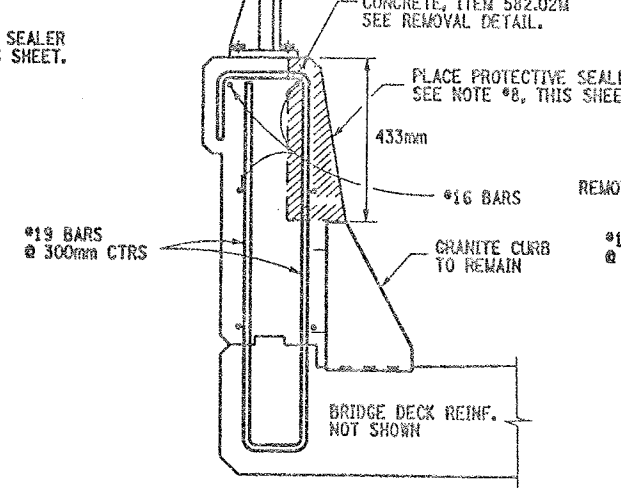

(IV) REPAIR DETAILS
FRONT FACE

NOT TO SCALE

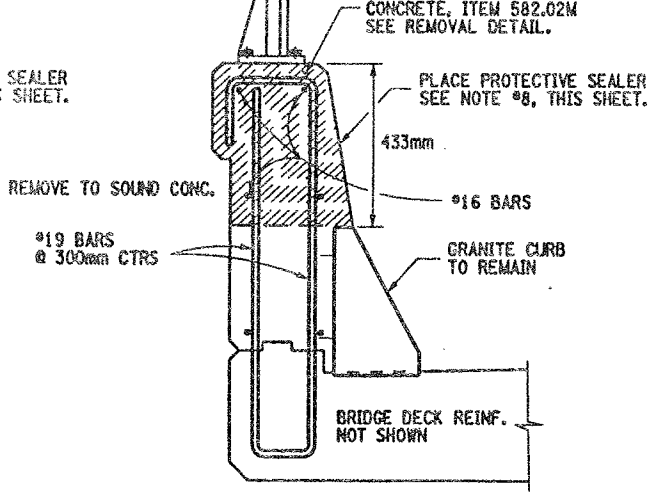

(V) REPAIR DETAILS
FULL SECTION

NOT TO SCALE

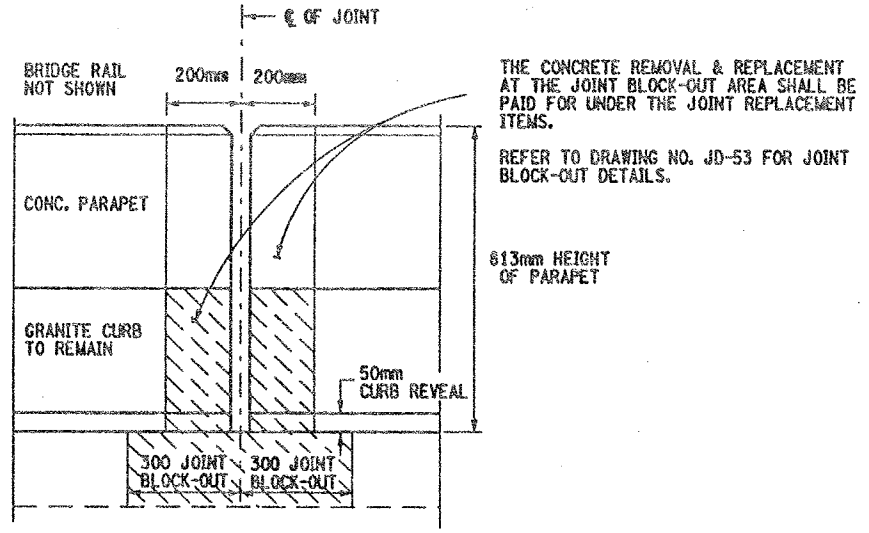

FRONT FACE PARAPET CONCRETE DETAIL
SHOWS TYPICAL CONC. REMOVAL AT JOINT

NOT TO SCALE

ASBESTOS MATERIAL REMOVAL NOTES:

THE REMOVAL OF ALL ASBESTOS CONTAINING CAULK (ITEM 210.5433M) SHALL BE COMPLETED PRIOR TO COMMENCEMENT OF ANY PARAPET REPAIR WORK.

THIS REMOVAL OF THE ASBESTOS CAULK SHALL BE PERFORMED AT EACH BRIDGE RAIL BASE PLATE ON BOTH N.B. & S.B. BRIDGES. (REMOVE ASBESTOS CALKING AT ALL RAIL BASE PLATES BOTH BRIDGES)

AFTER COMPLETION OF THE PARAPET REPAIRS INSTALL A CAULKING COMPOUND AROUND THE BASE PLATES OF THE RAILING WHICH MEETS MATERIAL SPECIF. 705-06 AND IS ACCEPTABLE TO THE ENGINEER. PAID UNDER ITEM 210.5433M.

REFER TO ORIGINAL CONTRACT PLANS F.I.S.H. 70-7 FOR RAIL LAY-OUT DETAILS.

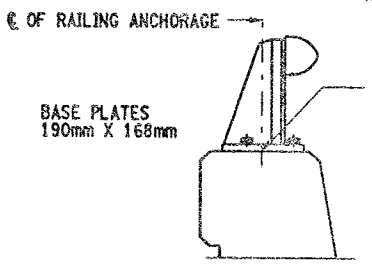

REMOVE EXISTING GRAY ASBESTOS CAULKING COMPOUND AT THE ALUMINUM RAILING BASE PLATES, IT IS ASSUMED THAT THE CAULK COMPOUND IS SURROUNDING (PERIMETER) THE RAILING BASE PLATES. THIS PERIMETER REMOVAL OPERATION SHALL BE PERFORM AT EACH RAILING BASE PLATE ON BOTH STRUCTURES.

HOWEVER, SOME CAULK MATERIAL MAY BE FOUND UNDER THE RAILING BASE PLATES. THIS CAULKING COMPOUND UNDER THE BASE PLATES SHALL BE REMOVED ONLY AT LOCATIONS WHERE THE PARAPET CONCRETE REPAIRS WILL DISTRUB THE MATERIAL (REMOVAL AS ENCOUNTERED).

ALL COSTS TO BE PAID UNDER ITEM 210.5433M. SEE ASBESTOS MATERIAL REMOVAL NOTES, THIS SHEET.

TYPICAL BRIDGE RAIL DETAIL

NOT TO SCALE

ITEMS USED:

ITEM 582.05M - REMOVAL OF STRUCTURAL CONCRETE REPLACE WITH CLASS "A" CONCRETE (CM)

ITEM 210.5433M - REMOVAL & DISPOSAL OF ASBESTOS CONTAINING CAULK (BV 12) (LS)

ITEM 18559.1696M - PROTECTIVE SEALING OF STRUCTURAL CONCRETE (SM)

ALL DIMENSIONS ARE IN mm UNLESS OTHERWISE NOTED

AS BUILT REVISIONS

SIGNATURE DATE

INTERSTATE 481 OVER CSX RR YARD

PARAPET REPAIR DETAILS

STATE OF NEW YORK
DEPARTMENT OF TRANSPORTATION

FILENAME	REGION	DATE	DRAWING NO.
305613AB.R1A	3	10/02	PW17-1

ESTIMATED BY ____ DRAFTED BY ____ CHECKED BY ____
DESIGN SUPERVISOR ____ JOB MANAGER ____ DESIGNED BY ____

FED ROAD REG. NO.	STATE	CONTRACT NO.	SHEET NO.	TOTAL SHEETS
1	N.Y.	D259214	332	432

BRIDGE REHABILITATION PROJECT (ELEMENT SPECIFIC)
VARIOUS BRIDGES ON INTERSTATE 481
TOWNS OF DEWITT AND CICERO
ONONDAGA COUNTY
P.I.N. 305613 B.I.N. 1093572

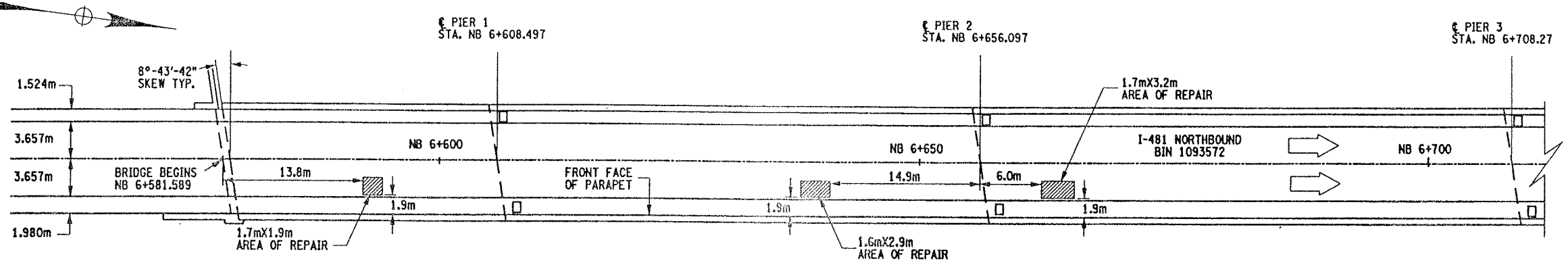

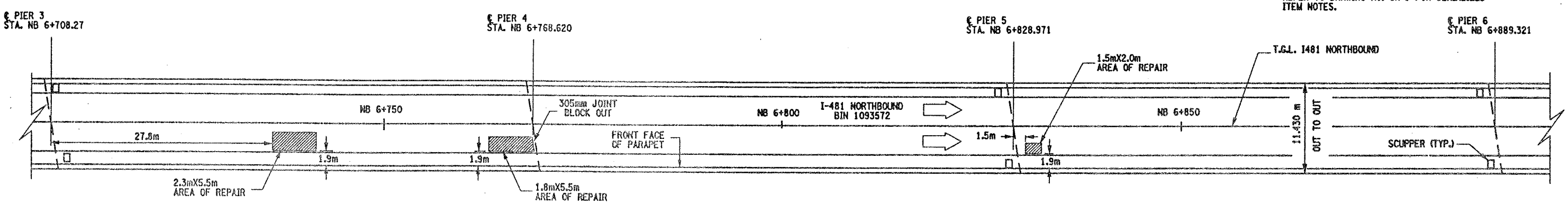

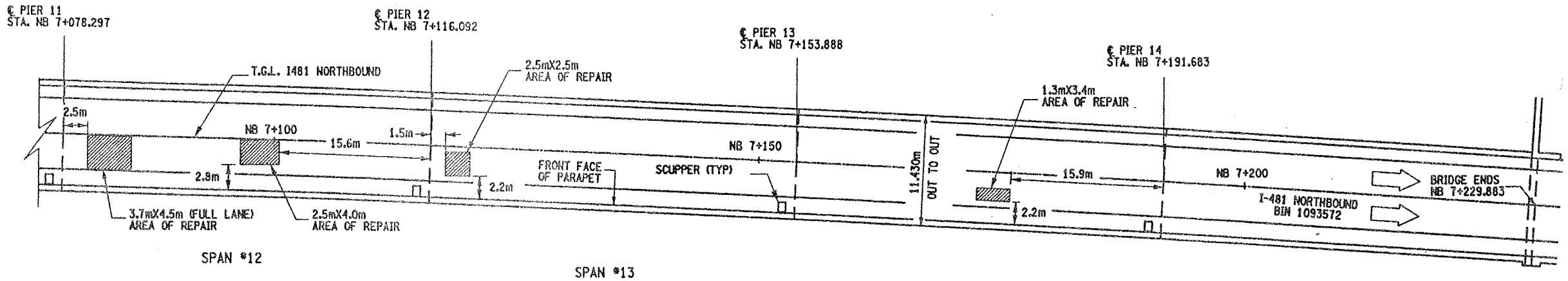

PLAN VIEW OF SPOT DECK REPAIRS

NOT TO SCALE

GENERAL NOTES:

THIS WORK ONLY PERTAINS TO BIN 1093572 NB.

THE AREAS SHOWN ARE THE RESULTS OF FIELD INVESTIGATIONS AND ARE ONLY APPROXIMATE. THE ACTUAL LIMITS SHALL BE AS DIRECTED BY ENGINEER.

NO FULL DEPTH SLAB REPAIRS ARE EXPECTED AT THESE LOCATIONS.

REFER TO DRAWING NO. GN-1 FOR SERIALIZED ITEM NOTES.

REMOVAL NOTES:

ORIGINAL BRIDGE DECK 203mm MONOLITHIC SLAB. A 38mm CONC. OVERLAY HAS BEEN ADDED.

THESE LOCATIONS ARE CURRENTLY FILLED WITH ASPHALT (BLACKTOP). DEPTH OF ASPHALT IS UNKNOWN, ESTIMATED AT @ 38mm. THE REMOVAL OF THE ASPHALT AND CONCRETE TO LIMITS SHOWN TO BE PAID UNDER ITEM 579.02M.

REMOVE CONCRETE TO LIMITS SHOWN AND TO SOUND CONCRETE, AS ORDER BY ENGINEER.

ALL AREAS THAT ARE REPAIRED SHALL ALSO RECEIVE ITEM 558.01 - TRANSVERSE SAWCUT GROOVING AND ITEM 18559.1896M - PROTECTIVE SEALING.

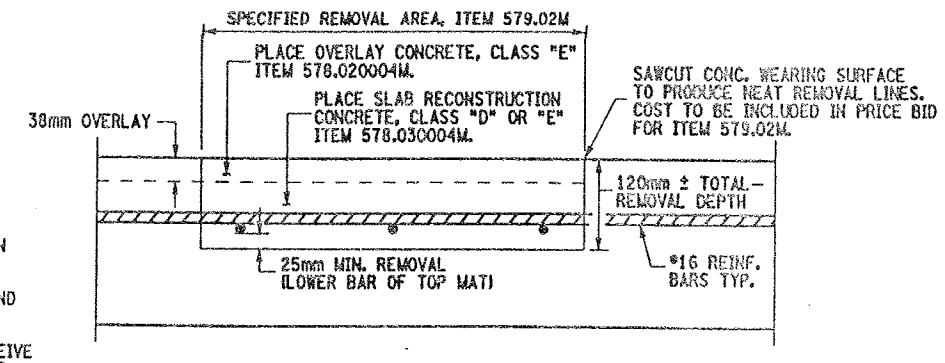

CROSS SECTION VIEW THROUGH REPAIR LOCATION

NOT TO SCALE

ITEMS USED:

ITEM 558.01M - TRANSVERSE SAWCUT GROOVING (SM)
ITEM 18559.1896M - PROTECTIVE SEALING FOR STRUCT. CONC. (SM)
ITEM 578.020004M - OVERLAY CONCRETE, CLASS "E" (SM)
ITEM 578.030004M - SLAB RECONSTRUCTION CONCRETE, CLASS "D" OR "E" (SM)
ITEM 579.02M - REINFORCING BAR EXPOSURE (SM)

ALL DIMENSIONS ARE IN m UNLESS OTHERWISE NOTED

AS BUILT REVISIONS

SIGNATURE DATE

INTERSTATE 481
OVER
CSX RAILROAD YARD
BRIDGE DECK REPAIRS

STATE OF NEW YORK
DEPARTMENT OF TRANSPORTATION

FILENAME	REGION	DATE	DRAWING NO.
305613AB.R1A	3	10/02	DR17-1

DESIGN SUPERVISOR — JOB MANAGER — ESTIMATED BY — DESIGNED BY — DRAFTED BY — CHECKED BY

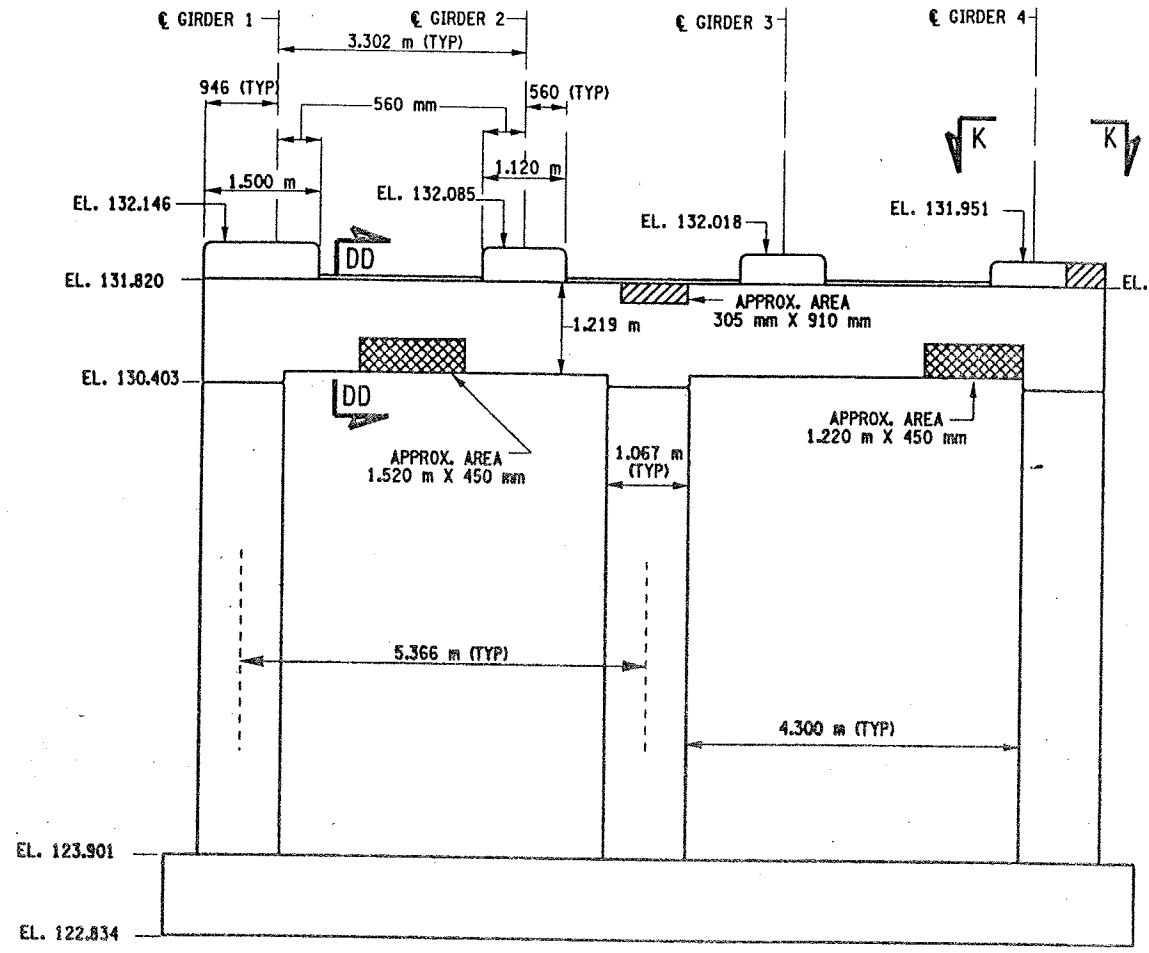

PIER 10 - FRONT FACE (LOOKING NORTH)
BIN 1093572
SCALE: 1 TO 50

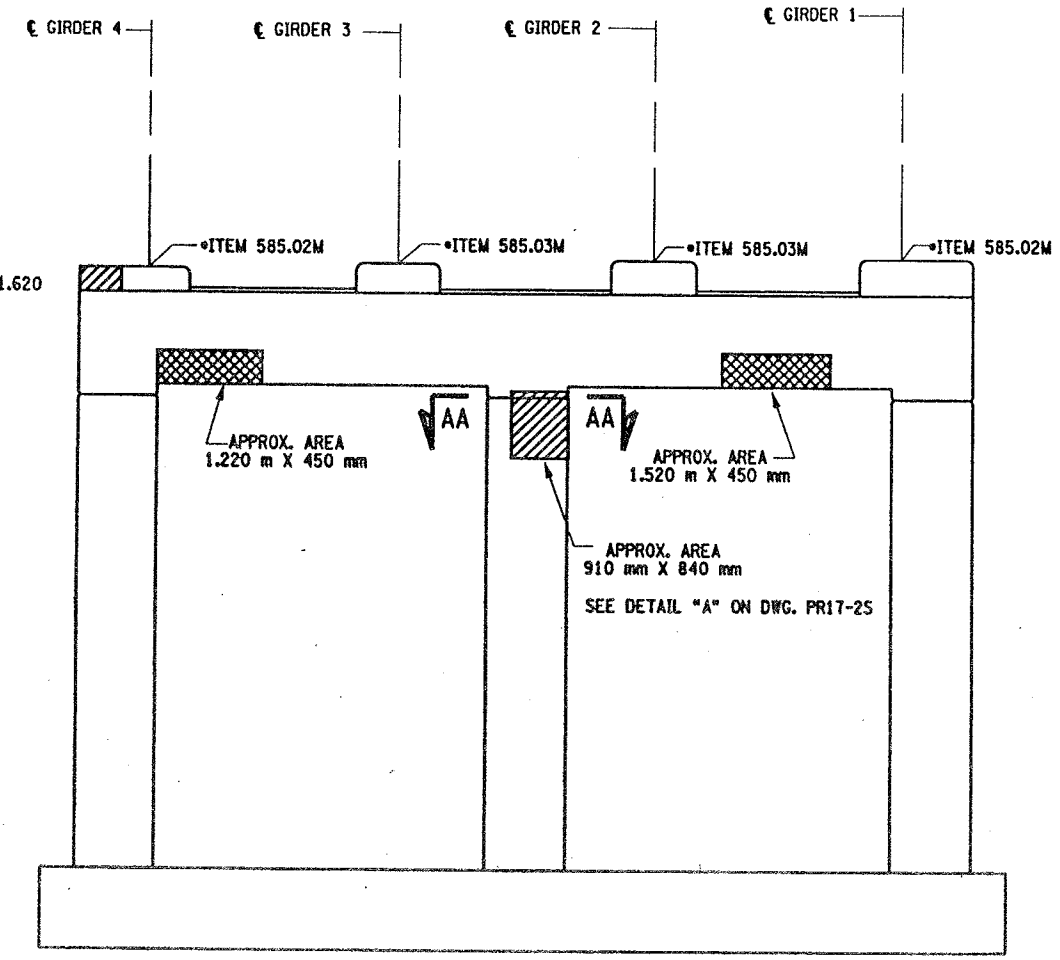

PIER 10 - BACK FACE (LOOKING SOUTH)
BIN 1093572
SCALE: 1 TO 50

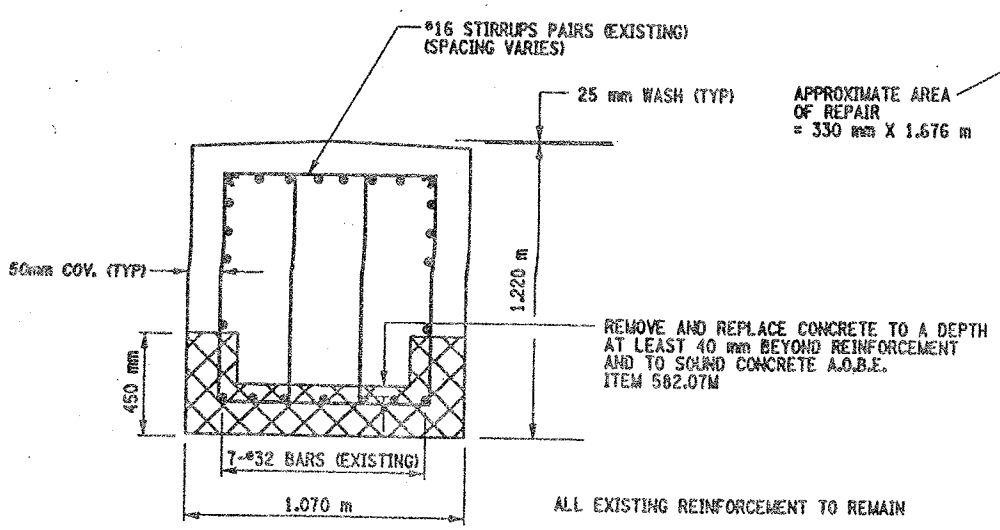

SECTION DD-DD
NOT TO SCALE

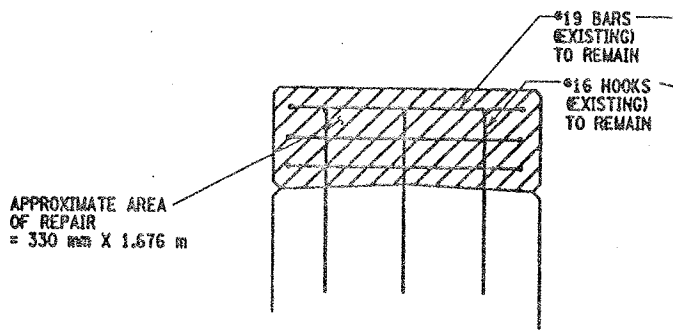

SECTION N-N
NOT TO SCALE

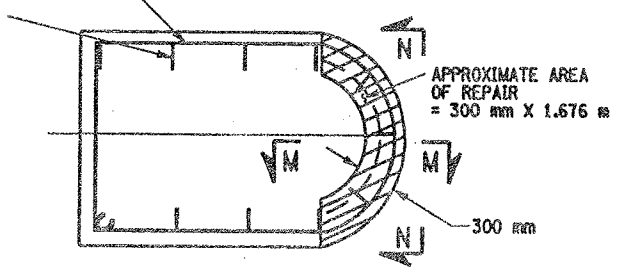

SECTION K-K
NOT TO SCALE

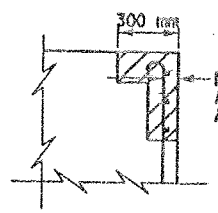

SECTION M-M
NOT TO SCALE

LIST OF ITEMS USED:

ITEM 15565.4302M - BRIDGE BEARING RESTORATION (EA)
ITEM 582.05M - REM. OF STRUC. CONC. - REPLACE WITH CLASS A CONCRETE (CM)
ITEM 582.07M - REM. OF STRUC. CONC. - REPL. W/ VERT. OVERHEAD PATCH MATL. (SM)
ITEM 585.02M - STRUCTURAL LIFTING OPERATIONS - TYPE B (EA)
ITEM 585.03M - STRUCTURAL LIFTING OPERATION - TYPE C (EA)

FED ROAD REG. NO.	STATE	CONTRACT NO.	SHEET NO.	TOTAL SHEETS
1	N.Y.	D259214	325	432

BRIDGE REHABILITATION PROJECT (ELEMENT SPECIFIC)
VARIOUS BRIDGES ON INTERSTATE 481
TOWNS OF DEWITT AND CICERO
ONONDAGA COUNTY
P.I.N. 305613 B.I.N. 1093572

NOTES:

1. ALL REINFORCEMENT TO REMAIN.
2. RESTORE TO ORIGINAL DIMENSIONS.
3. PEDESTALS NUMERICALLY NUMBERED FROM WEST TO EAST.
4. FOR THE CONCRETE REPAIR AREAS, THE CONCRETE SHALL BE REMOVED TO AT LEAST 40mm MIN. BEYOND THE ENCOUNTERED REINFORCEMENT AND TO SOUND CONCRETE, A.O.B.E.
5. ELEVATIONS SHOWN ARE FROM ORIGINAL CONTRACT PLANS F.I.S.H. 70-7 AND ARE FOR REFERENCE ONLY.
6. REMOVAL DIMENSIONS SHOWN ON PLANS ARE ESTIMATED AND SHALL BE FIELD VERIFIED BY THE CONTRACTOR PRIOR TO BEGINNING OF REMOVAL OPERATIONS A.O.B.E.
7. PERFORM BEARING RESTORATION TO ALL EXPANSION BEARINGS (TO INCLUDE RESETTING OF UNDEREXTENDED OR OVEREXTENDED BEARINGS). SEE DWG. PR17-1S FOR BEARING RESTORATION NOTES. SEE DWG. BR-10 & BR-11 FOR BEARING RESTORATION DETAILS.
8. FOR SECTION AA-AA SEE DWG. PR17-7N.
9. ALL CONCRETE REMOVAL SHALL BE SAWCUT TO PRODUCE NEAT REMOVAL LINES. COST TO BE INCLUDED IN THE PRICE BID FOR ITEM 582.05M AND ITEM 582.07M.
10. FOR JACKING NOTES SEE DWG PR17-1S.

• PERFORM STRUCTURAL LIFTING UNDER ITEM 585.02M - STRUCTURAL LIFTING OPERATIONS - TYPE B LIFTING AT A PIER) OR ITEM 585.03M - STRUCTURAL LIFTING OPERATIONS - TYPE C LIFTING AT A PIER WHERE THE CONTRACTOR SHALL BE REQUIRED TO LIFT OFF THE FOOTING AND/OR GROUND LEVEL.

JACKING LOADS:

D.L. = 75 MT
L.L. = 50 MT
TOTAL = 125 MT

LEGEND:

ITEM 582.05M - REMOVAL OF STRUCTURAL CONCRETE- REPLACE WITH CLASS A CONCRETE (CM)

ITEM 582.07M - REMOVAL OF STRUCTURAL CONCRETE - REPLACE WITH VERTICAL OVER-HEAD PATCH MATERIAL. (SM)

ALL DIMENSIONS ARE IN mm UNLESS OTHERWISE NOTED

AS BUILT REVISIONS

SIGNATURE DATE

INTERSTATE 481 NB
OVER
CSX RAILROAD YARD
PIER 10

STATE OF NEW YORK
DEPARTMENT OF TRANSPORTATION

FILENAME	REGION	DATE	DRAWING NO.
305613AE.P10	3	10/02	PR17-10N

DESIGNED BY
DRAFTED BY
CHECKED BY
ESTIMATED BY
JOB MANAGER
DESIGN SUPERVISOR

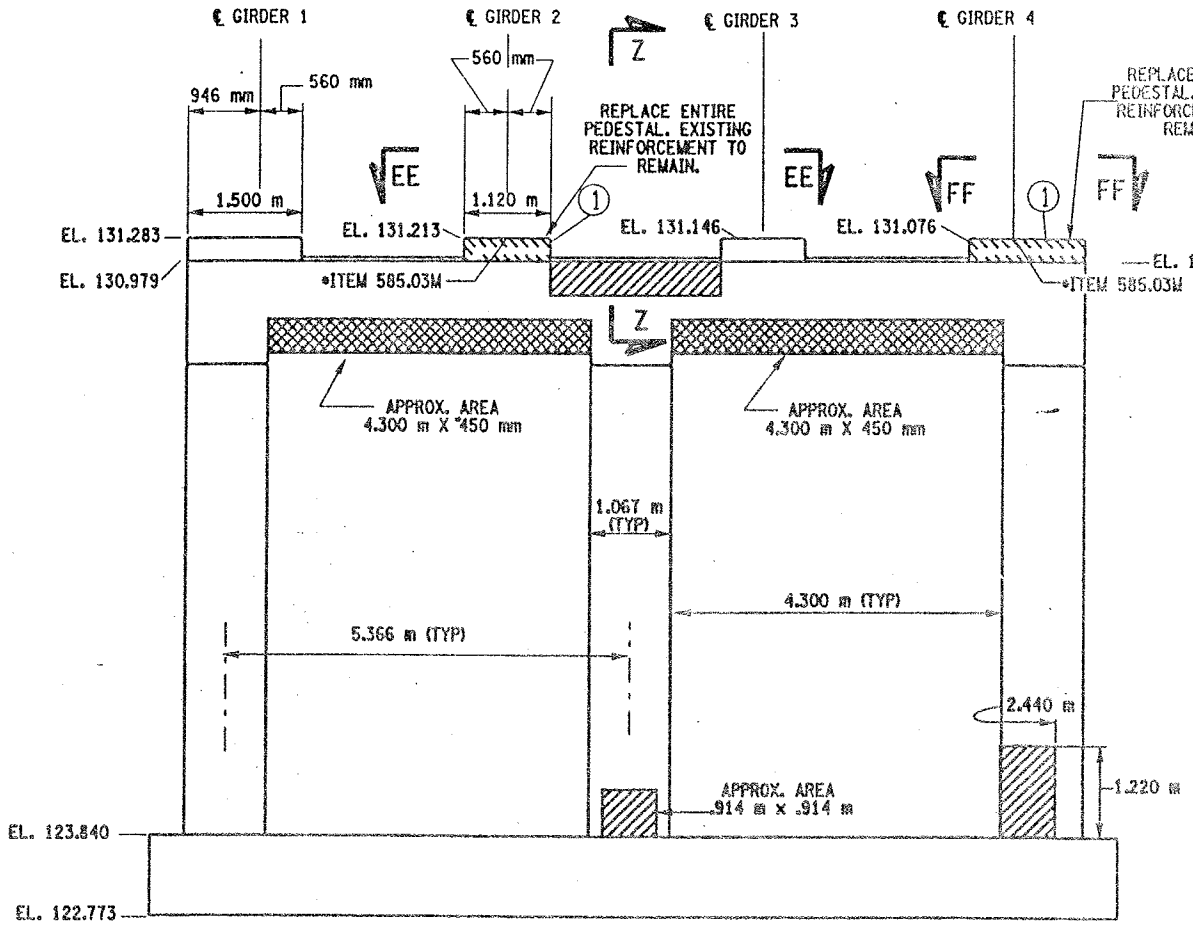

PIER 11 - FRONT FACE (LOOKING NORTH)
BIN 1093572
SCALE: 1 TO 50

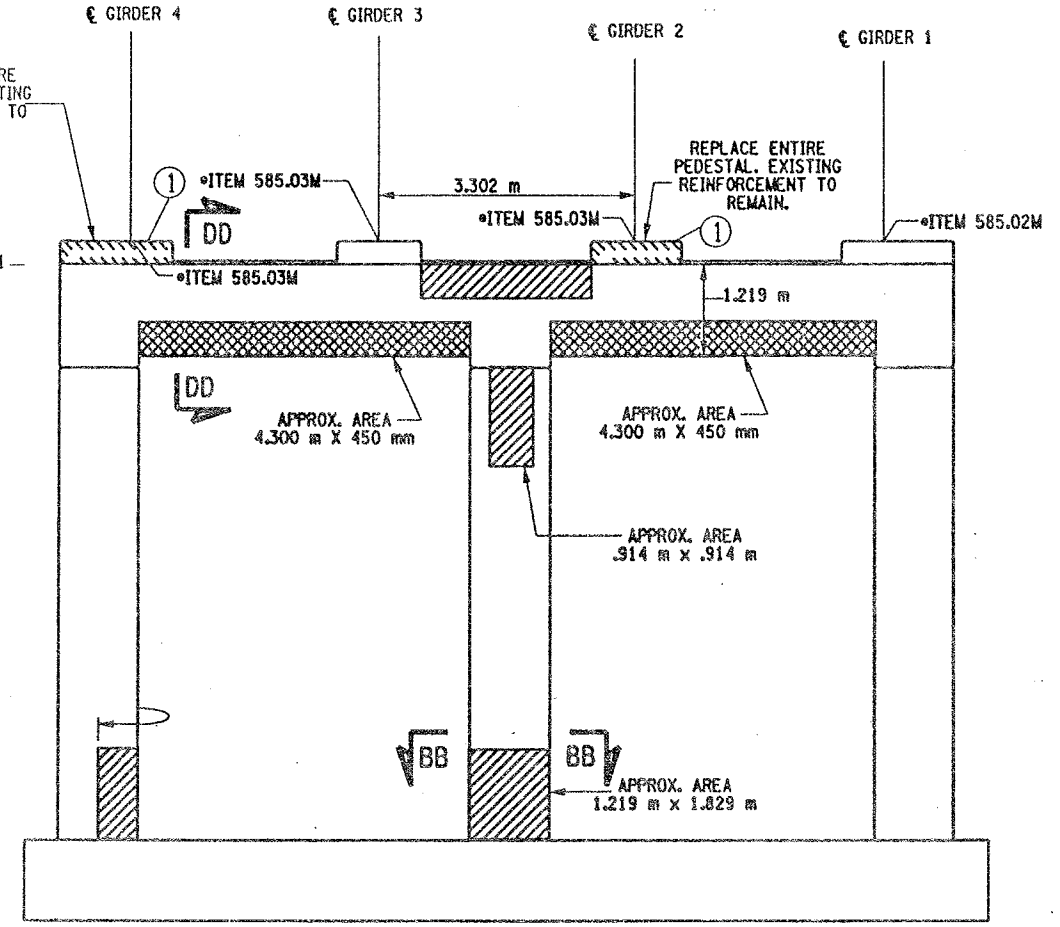

PIER 11- BACK FACE (LOOKING SOUTH)
BIN 1093572
SCALE: 1 TO 50

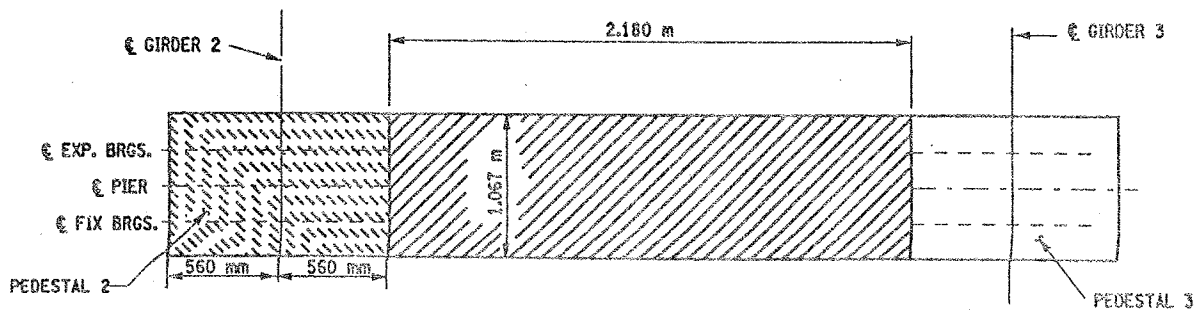

SECTION EE-EE
NOT TO SCALE

CONCRETE TABLE (m³)		
PLACEMENT	QUANTITY	ITEM NO.
1	0.80	555.0105M

(1) INDICATES CONCRETE PLACEMENT NUMBER

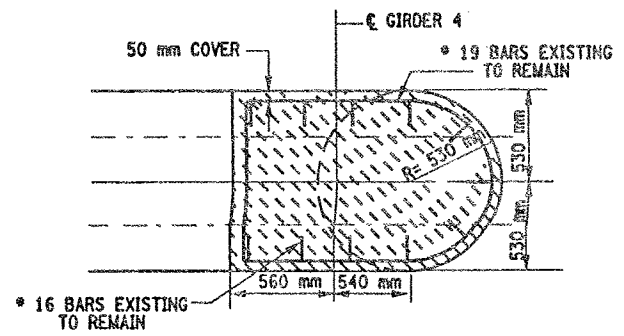

SECTION FF-FF
NOT TO SCALE

LIST OF ITEMS USED

ITEM 555.0105M - CONCRETE FOR STRUCTURES, CLASS A (CM)
ITEM 15565.4302M - BRIDGE BEARING RESTORATION (EA)
ITEM 580.01M - REMOVAL OF STRUCTURAL CONCRETE (CM)
ITEM 582.05M - REM. OF STRUC. CONC. - REPLACE WITH CLASS A CONCRETE (CM)
ITEM 582.07M - REM. OF STRUC. CONC. - REPL. W/ VERT. OVERHEAD PATCH MAT'L (SM)
ITEM 585.02M - STRUCTURAL LIFTING OPERATIONS - TYPE B (EA)
ITEM 585.03M - STRUCTURAL LIFTING OPERATION - TYPE C (EA)

FED ROAD REG. NO.	STATE	CONTRACT NO.	SHEET NO.	TOTAL SHEETS
1	N.Y.	D259214	326	432

BRIDGE REHABILITATION PROJECT (ELEMENT SPECIFIC)
VARIOUS BRIDGES ON INTERSTATE 481
TOWNS OF DEWITT AND CICERO
ONONDAGA COUNTY
P.I.N. 305613 | B.I.N. 1093572

NOTES:

1. ALL REINFORCEMENT TO REMAIN.
2. RESTORE TO ORIGINAL DIMENSIONS.
3. PEDESTALS NUMERICALLY NUMBERED FROM WEST TO EAST.
4. FOR THE CONCRETE REPAIR AREAS, THE CONCRETE SHALL BE REMOVED TO AT LEAST 40mm MIN. BEYOND THE ENCOUNTERED REINFORCEMENT AND TO SOUND CONCRETE, A.O.B.E.
5. ELEVATIONS SHOWN ARE FROM ORIGINAL CONTRACT PLANS F.I.S.H. 70-7 AND ARE FOR REFERENCE ONLY.
6. REMOVAL DIMENSIONS SHOWN ON PLANS ARE ESTIMATED AND SHALL BE FIELD VERIFIED BY THE CONTRACTOR PRIOR TO BEGINNING OF REMOVAL OPERATIONS A.O.B.E.
7. PERFORM BEARING RESTORATION TO ALL EXPANSION BEARINGS (TO INCLUDE RESETTING OF UNDEREXTENDED OR OVEREXTENDED BEARINGS). SEE DWG. PR17-1S FOR BEARING RESTORATION NOTES. SEE DWG. BR-10 & BR-11 FOR BEARING RESTORATION DETAILS.
8. SEE DWG PR17-10N FOR SECTION DD-DD.
9. SEE DWG. PR17-12S FOR SECTION BB-BB.
10. SEE DWG. PR17-7N FOR SECTION Z-Z.
11. PEDESTALS 2 AND 4 SHALL BE REPLACED TO EXISTING DIMENSIONS, ITEM 555.0105 M
12. ALL CONCRETE REMOVAL SHALL BE SAWCUT TO PRODUCE NEAT REMOVAL LINES. COST TO BE INCLUDED IN THE PRICE BID FOR ITEM 582.05M AND ITEM 582.07M.
13. FOR JACKING NOTES SEE DWG PR17-1S.

* PERFORM STRUCTURAL LIFTING UNDER ITEM 585.02M - STRUCTURAL LIFTING OPERATIONS - TYPE B (LIFTING AT A PIER) OR ITEM 585.03M - STRUCTURAL LIFTING OPERATIONS - TYPE C (LIFTING AT A PIER WHERE THE CONTRACTOR SHALL BE REQUIRED TO LIFT OFF THE FOOTING AND/OR GROUND LEVEL.

JACKING LOADS:

D.L. = 75 MT
L.L. = 50 MT
TOTAL = 125 MT

LEGEND:

ITEM 582.05M - REMOVAL OF STRUCTURAL CONCRETE- REPLACE WITH CLASS A CONCRETE. (CM)

ITEM 582.07M - REMOVAL OF STRUCTURAL CONCRETE - REPLACE WITH VERTICAL OVERHEAD PATCH MATERIAL. (SM)

ITEM 580.01 M - REMOVAL OF STRUCTURAL CONCRETE. (CM) AND ITEM 555.0105 M - CONCRETE FOR STRUCTURES CLASS A. (CM)

ALL DIMENSIONS ARE IN mm UNLESS OTHERWISE NOTED

AS BUILT REVISIONS

SIGNATURE DATE

INTERSTATE 481 NB
OVER
CSX RAILROAD YARD
PIER 11

STATE OF NEW YORK
DEPARTMENT OF TRANSPORTATION

FILENAME	REGION	DATE	DRAWING NO.
305613AE_P11	3	10/02	PR17-11N

DESIGN SUPERVISOR ____ JOB MANAGER ____ DESIGNED BY ____ ESTIMATED BY ____ DRAFTED BY ____ CHECKED BY ____ CHECKED BY

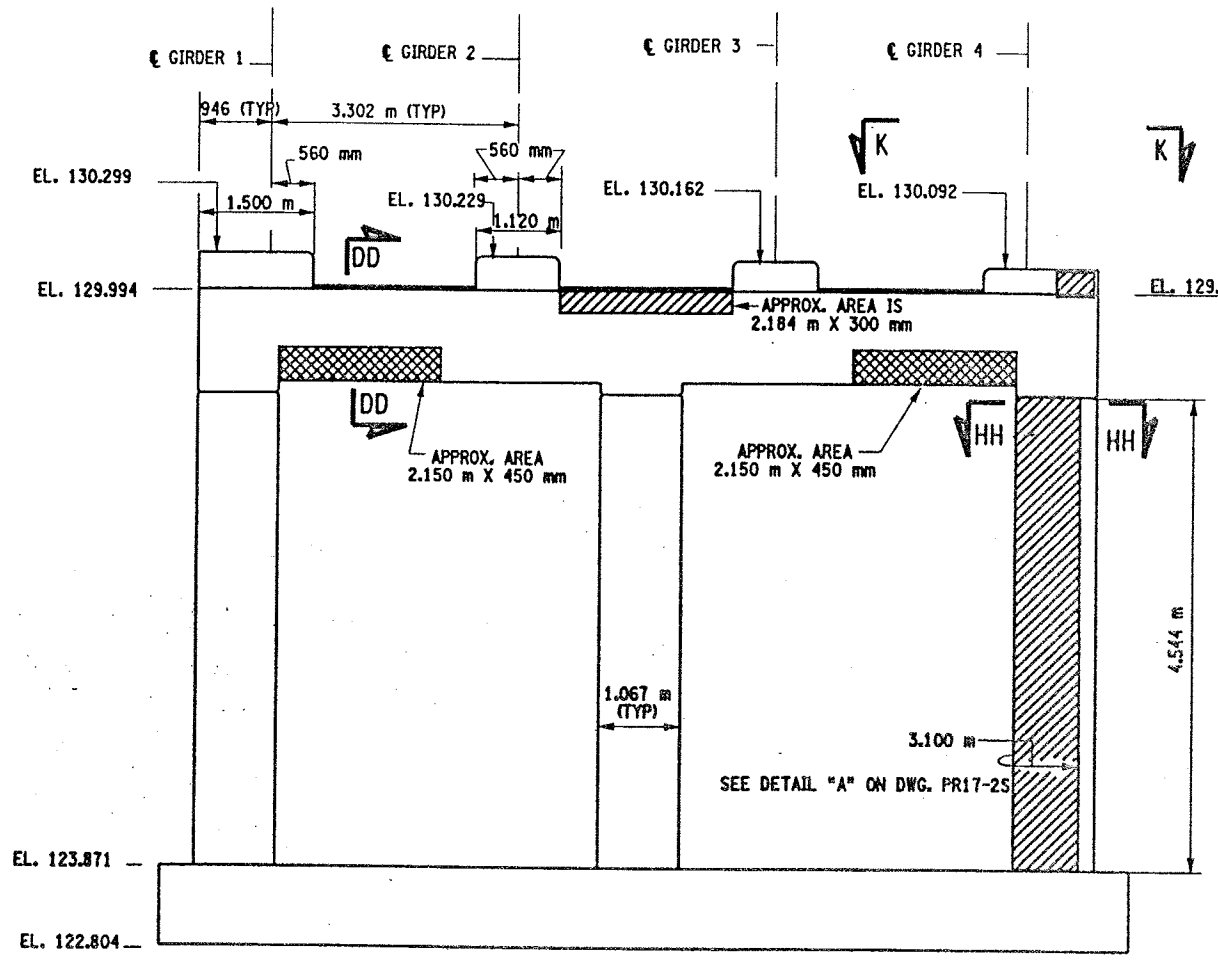

PIER 12 - FRONT FACE (LOOKING NORTH)

BIN 1093572

SCALE: 1 TO 50

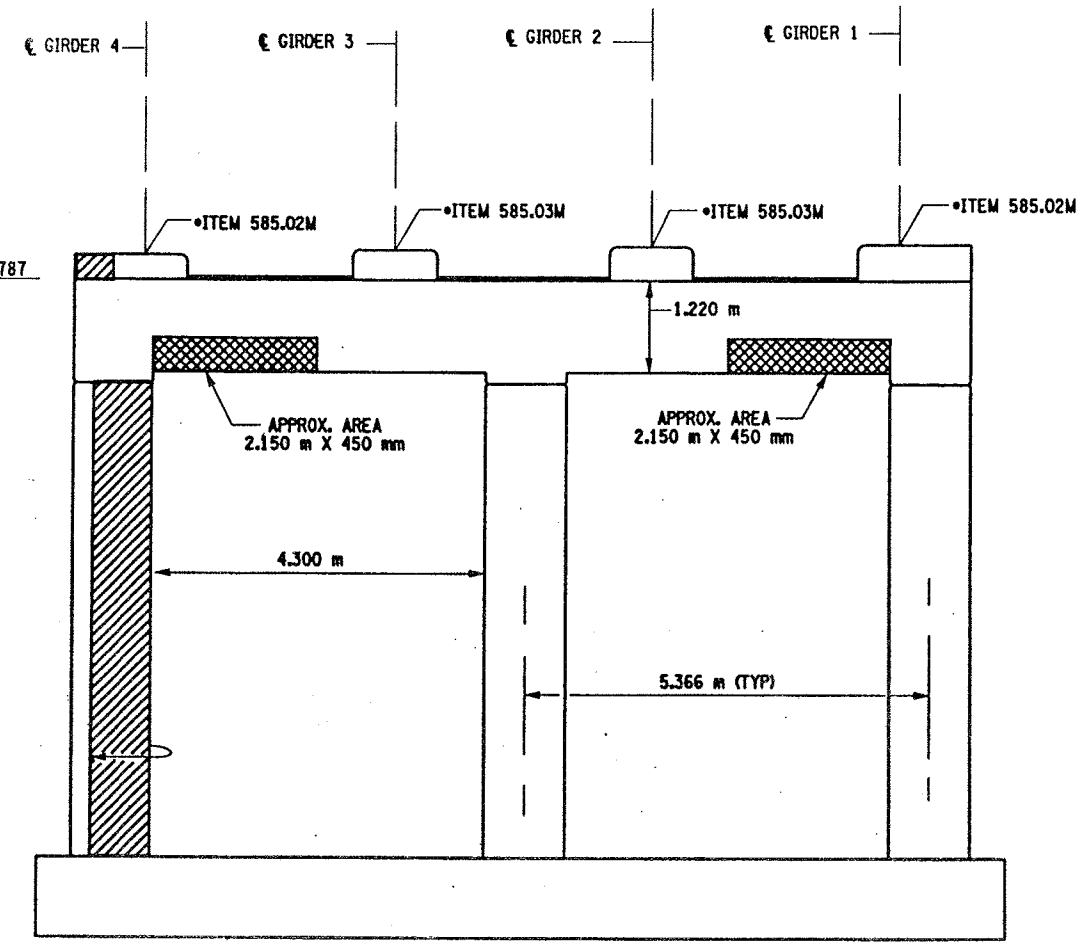

PIER 12 - BACK FACE (LOOKING SOUTH)

BIN 1093572

SCALE: 1 TO 50

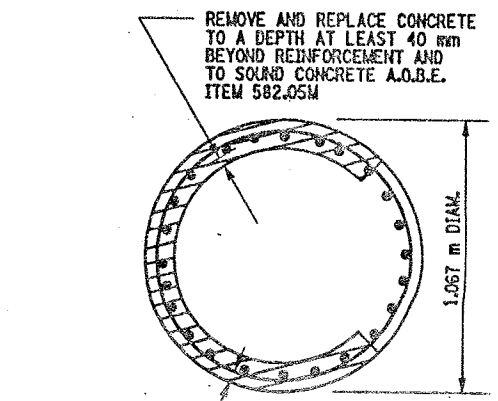

SECTION HH-HH

NOT TO SCALE

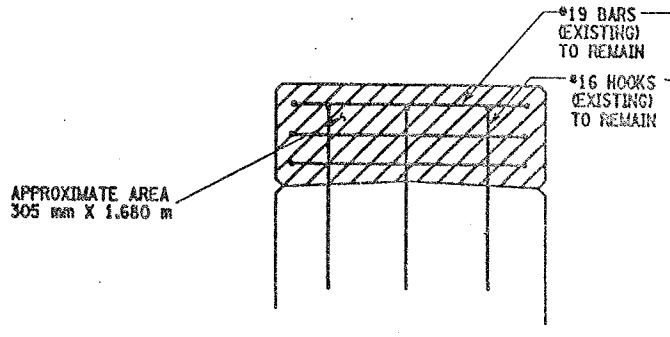

SECTION N-N

NOT TO SCALE

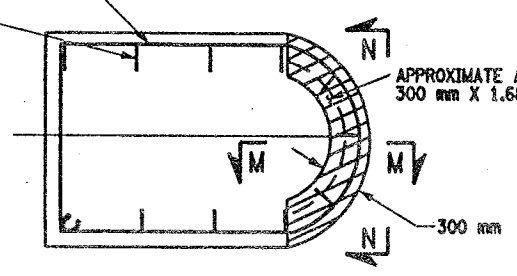

SECTION K-K

NOT TO SCALE

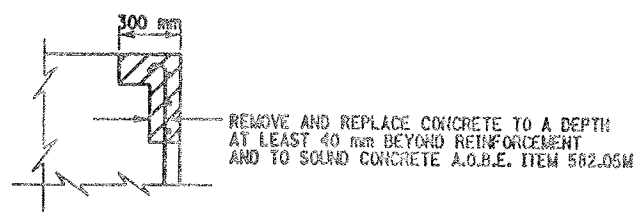

SECTION M-M

NOT TO SCALE

LIST OF ITEMS USED:

ITEM 15565.4302M - BRIDGE BEARING RESTORATION (EA)
ITEM 582.05M - REM. OF STRUC. CONC. - REPLACE WITH CLASS A CONCRETE (CM)
ITEM 582.07M - REM. OF STRUC. CONC. - REPL. W/ VERT. OVERHEAD PATCH MAT'L (SM)
ITEM 585.02M - STRUCTURAL LIFTING OPERATIONS - TYPE B (EA)
ITEM 585.03M - STRUCTURAL LIFTING OPERATION - TYPE C (EA)

FED ROAD REG. NO.	STATE	CONTRACT NO.	SHEET NO.	TOTAL SHEETS
1	N.Y.	D259214	327	432

BRIDGE REHABILITATION PROJECT (ELEMENT SPECIFIC)
VARIOUS BRIDGES ON INTERSTATE 481
TOWNS OF DEWITT AND CICERO
ONONDAGA COUNTY
P.I.N. 305613 B.I.N. 1093572

NOTES:

1. ALL REINFORCEMENT TO REMAIN.
2. RESTORE TO ORIGINAL DIMENSIONS.
3. PEDESTALS NUMERICALLY NUMBERED FROM WEST TO EAST.
4. FOR THE CONCRETE REPAIR AREAS, THE CONCRETE SHALL BE REMOVED TO AT LEAST 40mm MIN. BEYOND THE ENCOUNTERED REINFORCEMENT AND TO SOUND CONCRETE, A.O.B.E.
5. ELEVATIONS SHOWN ARE FROM ORIGINAL CONTRACT PLANS F.I.S.H. 70-7 AND ARE FOR REFERENCE ONLY.
6. REMOVAL DIMENSIONS SHOWN ON PLANS ARE ESTIMATED AND SHALL BE FIELD VERIFIED BY THE CONTRACTOR PRIOR TO BEGINNING OF REMOVAL OPERATIONS A.O.B.E.
7. PERFORM BEARING RESTORATION TO ALL EXPANSION BEARINGS (TO INCLUDE RESETTING OF UNDEREXTENDED OR OVEREXTENDED BEARINGS). SEE DWG. PR17-1S FOR BEARING RESTORATION NOTES. SEE DWG. BR-10 & BR-11 FOR BEARING RESTORATION DETAILS.
8. SEE DWG PR17-10N FOR SECTION DD-DD.
9. ALL CONCRETE REMOVAL SHALL BE SAWCUT TO PRODUCE NEAT REMOVAL LINES. COST TO BE INCLUDED IN THE PRICE BID FOR ITEM 582.05M AND 582.07M.
10. FOR JACKING NOTES SEE DWG PR17-1S.

• PERFORM STRUCTURAL LIFTING UNDER ITEM 585.02M - STRUCTURAL LIFTING OPERATIONS - TYPE B (LIFTING AT A PIER) OR ITEM 585.03M - STRUCTURAL LIFTING OPERATIONS - TYPE C (LIFTING AT A PIER WHERE THE CONTRACTOR SHALL BE REQUIRED TO LIFT OFF THE FOOTING AND/OR GROUND LEVEL.

JACKING LOADS:

D.L. = 75 MT
L.L. = 50 MT
TOTAL = 125 MT

LEGEND:

ITEM 582.05M - REMOVAL OF STRUCTURAL CONCRETE- REPLACE WITH CLASS A CONCRETE. (CM)

ITEM 582.07M - REMOVAL OF STRUCTURAL CONCRETE - REPLACE WITH VERTICAL OVER-HEAD PATCH MATERIAL. (SM)

ALL DIMENSIONS ARE IN mm UNLESS OTHERWISE NOTED

AS BUILT REVISIONS

SIGNATURE DATE

INTERSTATE 481 NB
OVER
CSX RAILROAD YARD
PIER 12

STATE OF NEW YORK
DEPARTMENT OF TRANSPORTATION

FILENAME	REGION	DATE	DRAWING NO.
305613AE.P12	3	10/02	PR17-12N

DESIGN SUPERVISOR ____ JOB MANAGER ____ DESIGNED BY ____ DRAFTED BY ____ ESTIMATED BY ____ CHECKED BY ____ CHECKED BY

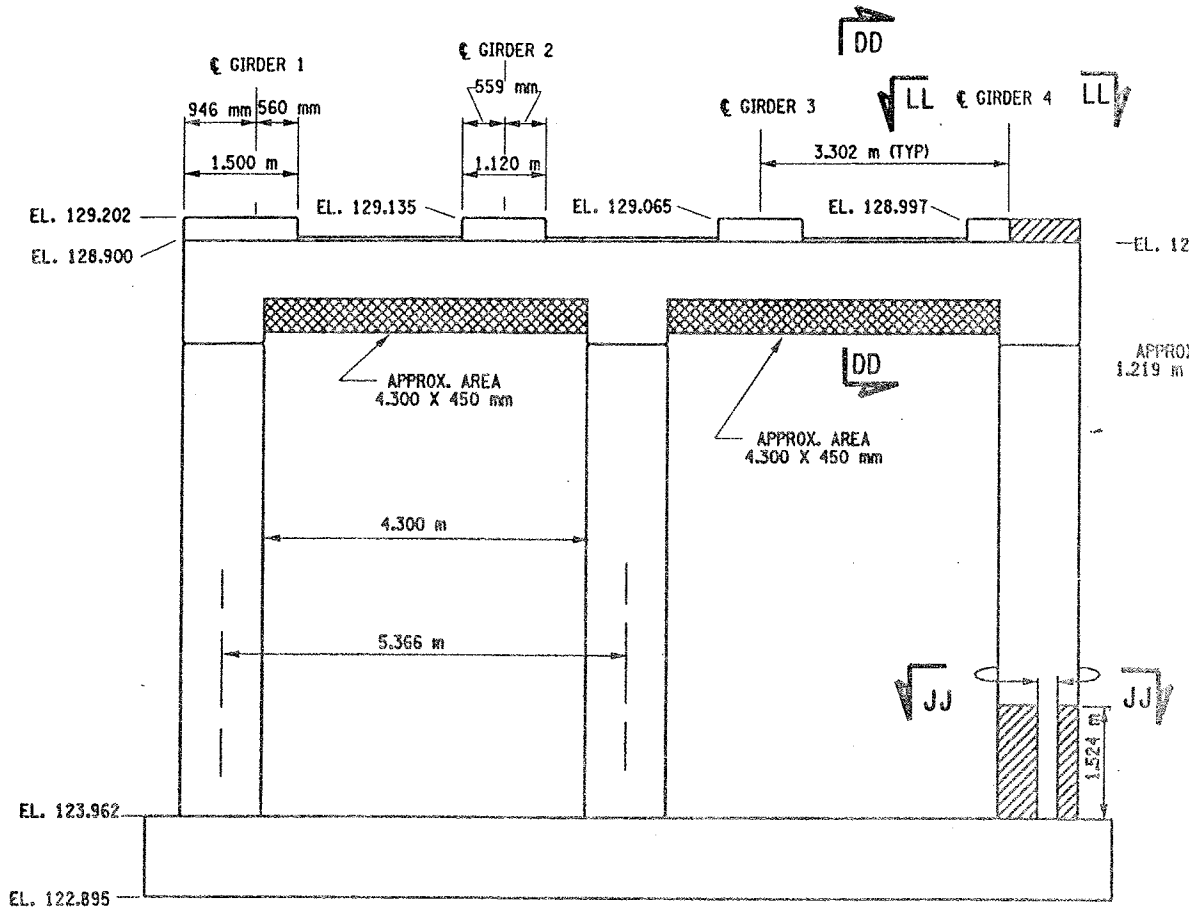

PIER 13 - FRONT FACE (LOOKING NORTH)
BIN 1093572
SCALE: 1 TO 50

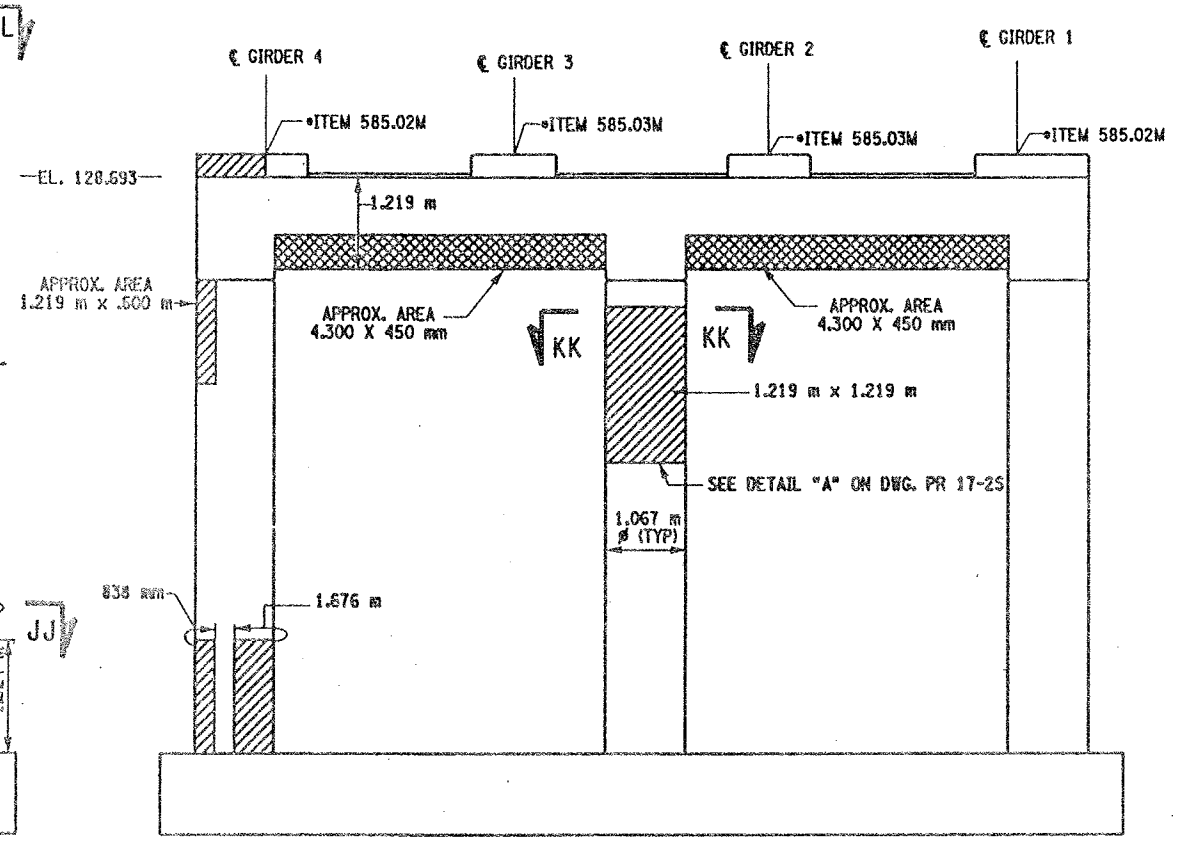

PIER 13- BACK FACE (LOOKING SOUTH)
BIN 1093572
SCALE: 1 TO 50

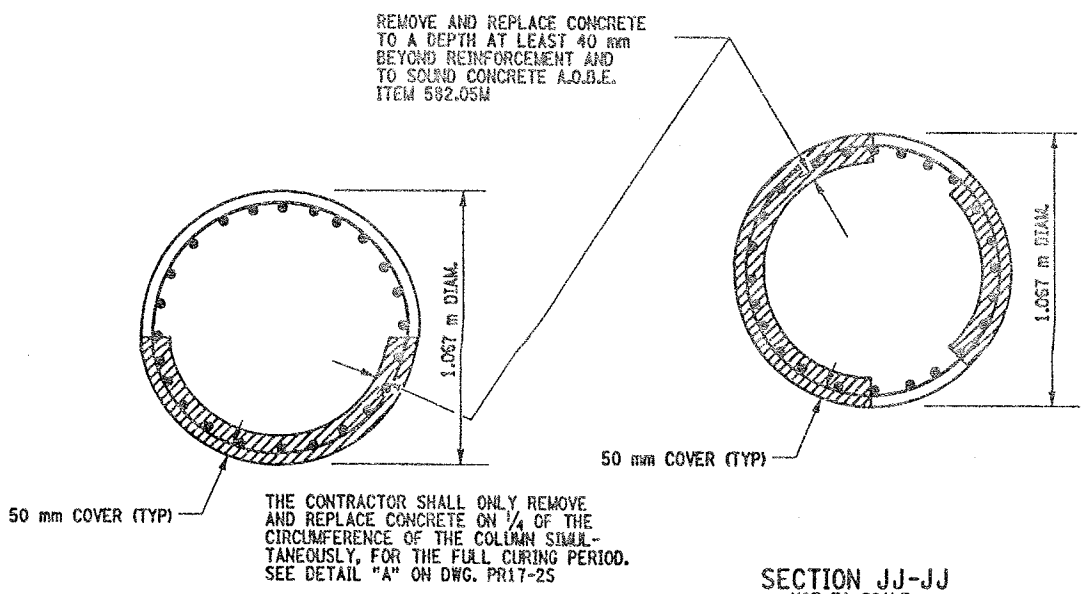

SECTION KK-KK

NOT TO SCALE

SECTION JJ-JJ
NOT TO SCALE

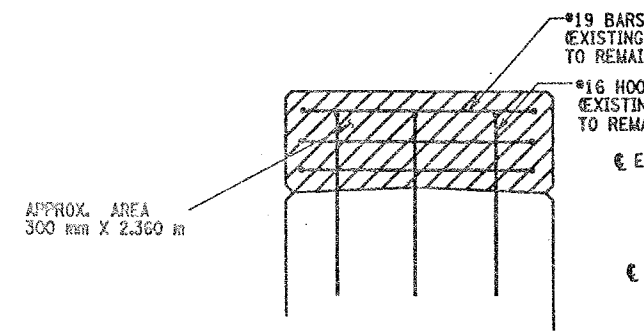

SECTION N-N
NOT TO SCALE

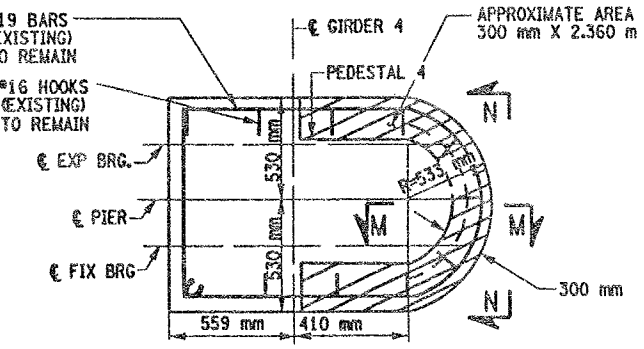

SECTION LL- LL
NOT TO SCALE

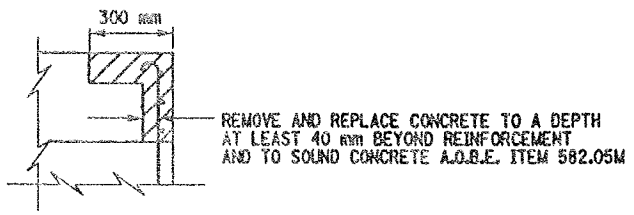

SECTION M-M
NOT TO SCALE

LIST OF ITEMS USED:

ITEM 15565.4302M - BRIDGE BEARING RESTORATION (EA)
ITEM 582.05M - REM. OF STRUC. CONC. - REPLACE WITH CLASS A CONCRETE (CM)
ITEM 582.07M - REM. OF STRUC. CONC. - REPL. W/ VERT. OVERHEAD PATCH MAT'L (SM)
ITEM 585.02M - STRUCTURAL LIFTING OPERATIONS - TYPE B (EA)
ITEM 585.03M - STRUCTURAL LIFTING OPERATION - TYPE C (EA)

FED ROAD REG. NO.	STATE	CONTRACT NO.	SHEET NO.	TOTAL SHEETS
1	N.Y.	D259214	328	432

BRIDGE REHABILITATION PROJECT (ELEMENT SPECIFIC)
VARIOUS BRIDGES ON INTERSTATE 481
TOWNS OF DEWITT AND CICERO
ONONDAGA COUNTY
P.I.N. 305613 B.I.N. 1093572

NOTES:

1. ALL REINFORCEMENT TO REMAIN.
2. RESTORE TO ORIGINAL DIMENSIONS.
3. PEDESTALS NUMERICALLY NUMBERED FROM WEST TO EAST.
4. FOR THE CONCRETE REPAIR AREAS, THE CONCRETE SHALL BE REMOVED TO AT LEAST 40mm MIN. BEYOND THE ENCOUNTERED REINFORCEMENT AND TO SOUND CONCRETE, A.O.B.E.
5. ELEVATIONS SHOWN ARE FROM ORIGINAL CONTRACT PLANS F.I.S.H. 70-7 AND ARE FOR REFERENCE ONLY.
6. REMOVAL DIMENSIONS SHOWN ON PLANS ARE ESTIMATED AND SHALL BE FIELD VERIFIED BY THE CONTRACTOR PRIOR TO BEGINNING OF REMOVAL OPERATIONS A.O.B.E.
7. PERFORM BEARING RESTORATION TO ALL EXPANSION BEARINGS (TO INCLUDE RESETTING OF UNDEREXTENDED OR OVEREXTENDED BEARINGS). SEE DWG. PR17-1S FOR BEARING RESTORATION NOTES. SEE DWG. BR-10 & BR-11 FOR BEARING RESTORATION DETAILS.
8. SEE DWG. PR 17-10N FOR SECTION DD-DD.
9. ALL CONCRETE REMOVAL SHALL BE SAWCUT TO PRODUCE NEAT REMOVAL LINES. COST TO BE INCLUDED IN THE PRICE BID FOR ITEM 582.05M AND 582.07M.
10. FOR JACKING NOTES SEE DWG PR17-1S.

• PERFORM STRUCTURAL LIFTING UNDER ITEM 585.02M - STRUCTURAL LIFTING OPERATIONS - TYPE B (LIFTING AT A PIER) OR ITEM 585.03M - STRUCTURAL LIFTING OPERATIONS - TYPE C (LIFTING AT A PIER WHERE THE CONTRACTOR SHALL BE REQUIRED TO LIFT OFF THE FOOTING AND/OR GROUND LEVEL.

JACKING LOADS:

D.L. = 75 MT
L.L. = 50 MT
TOTAL = 125 MT

LEGEND:

ITEM 582.05M - REMOVAL OF STRUCTURAL CONCRETE- REPLACE WITH CLASS A CONCRETE. (CM)

ITEM 582.07M - REMOVAL OF STRUCTURAL CONCRETE - REPLACE WITH VERTICAL OVER-HEAD PATCH MATERIAL. (SM)

ALL DIMENSIONS ARE IN mm UNLESS OTHERWISE NOTED

AS BUILT REVISIONS

SIGNATURE DATE

INTERSTATE 481 NB
OVER
CSX RAILROAD YARD
PIER 13

STATE OF NEW YORK
DEPARTMENT OF TRANSPORTATION

FILENAME	REGION	DATE	DRAWING NO.
305613AE.P13	3	10/02	PR17-13N

DESIGN SUPERVISOR ____ JOB MANAGER ____ DESIGNED BY ____ CHECKED BY ____ ESTIMATED BY ____ DRAFTED BY ____ CHECKED BY ____

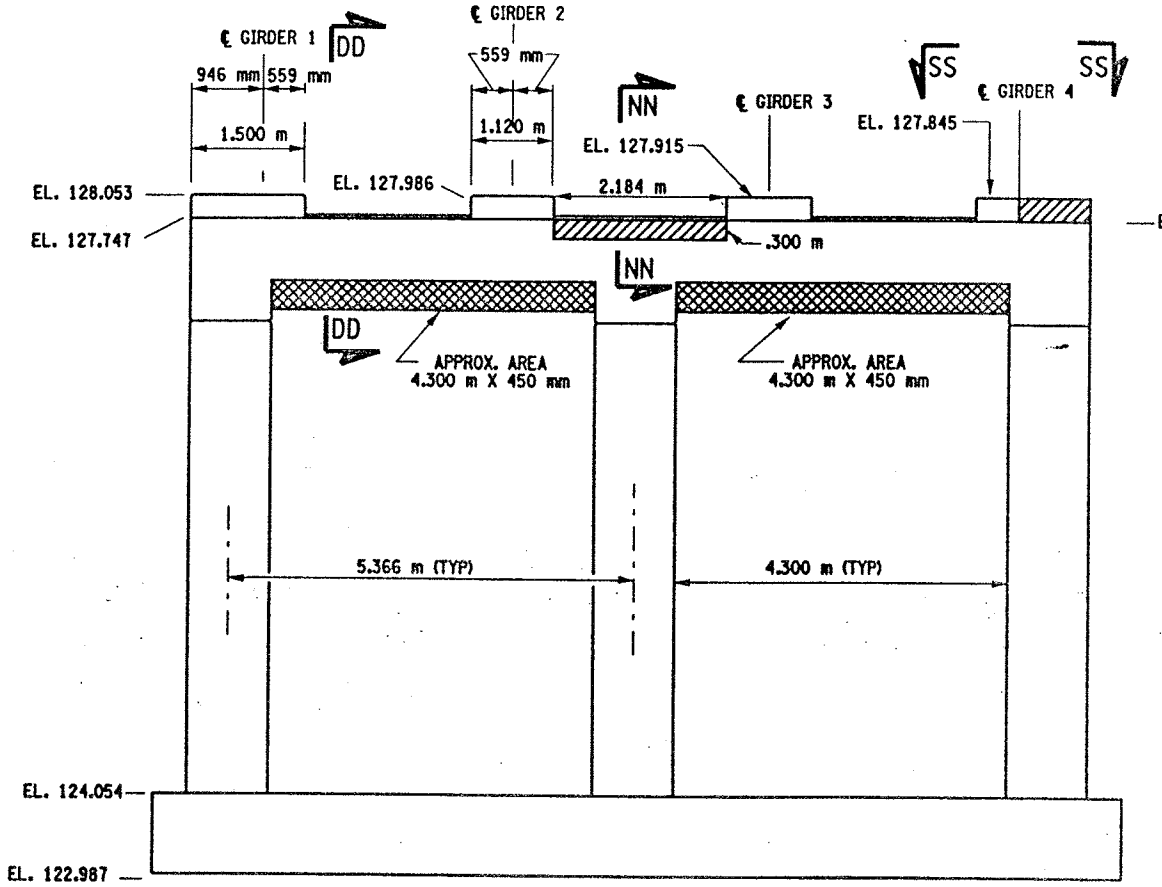

PIER 14 - FRONT FACE (LOOKING NORTH)
BIN 1093572
SCALE: 1 TO 50

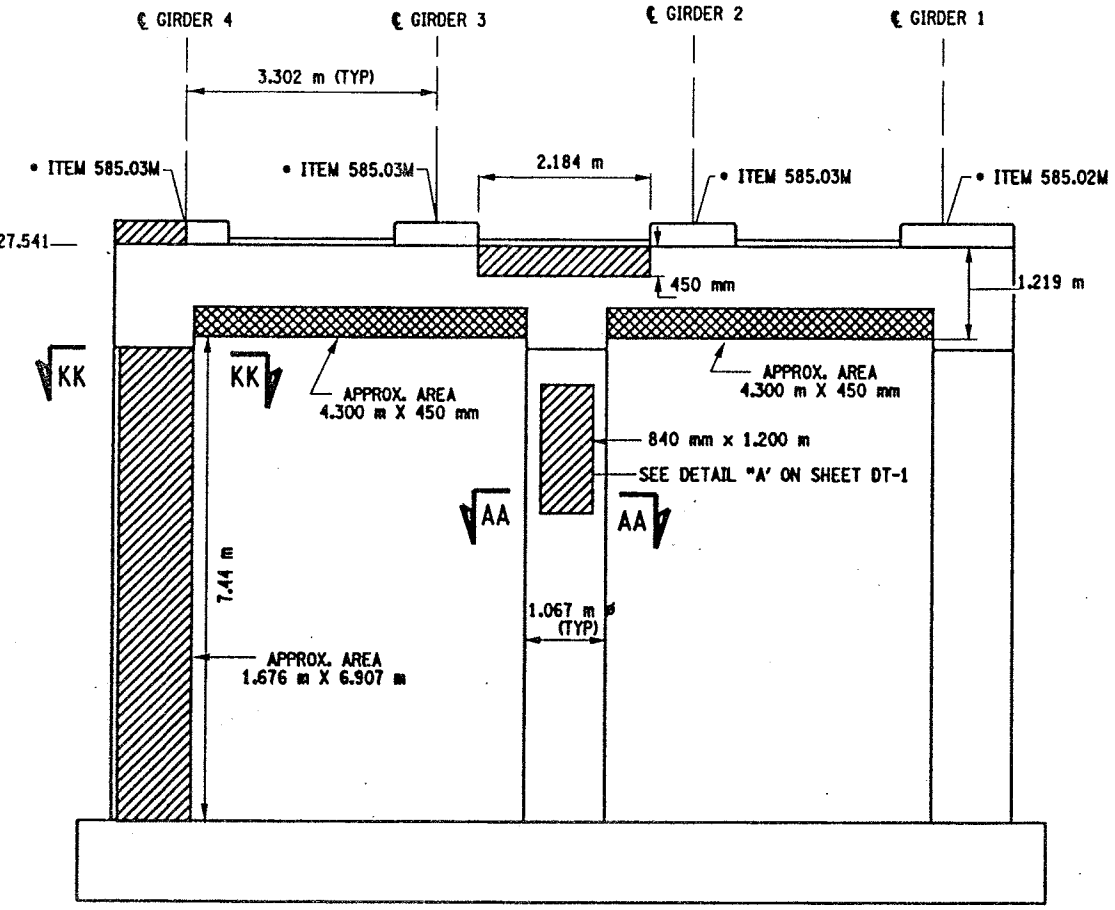

PIER 14 - BACK FACE (LOOKING SOUTH)
BIN 1093572
SCALE: 1 TO 50

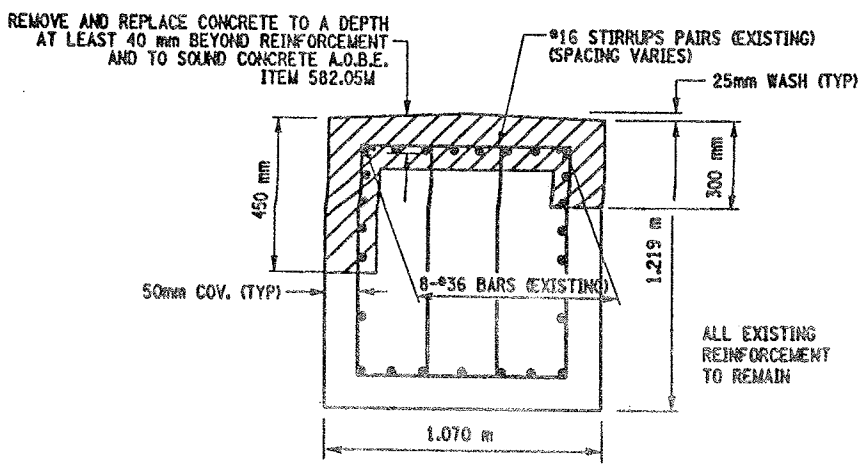

SECTION NN-NN
NOT TO SCALE

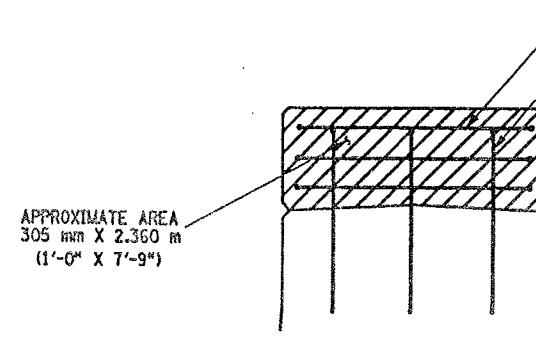

SECTION N-N
NOT TO SCALE

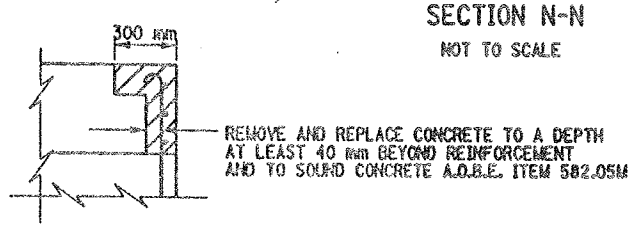

SECTION M-M
NOT TO SCALE

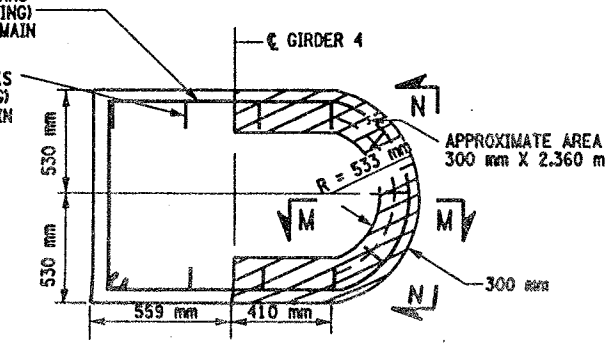

SECTION SS-SS
NOT TO SCALE

LIST OF ITEMS USED:

ITEM 15565.4302M - BRIDGE BEARING RESTORATION (EA)
ITEM 582.05M - REM. OF STRUC. CONC. - REPLACE WITH CLASS A CONCRETE (CM)
ITEM 582.07M - REM. OF STRUC. CONC. - REPL. W/ VERT. OVERHEAD PATCH MAT'L (SM)
ITEM 585.02M - STRUCTURAL LIFTING OPERATIONS - TYPE B (EA)
ITEM 585.03M - STRUCTURAL LIFTING OPERATION - TYPE C (EA)

FED ROAD REG. NO.	STATE	CONTRACT NO.	SHEET NO.	TOTAL SHEETS
1	N.Y.	D259214	329	432

BRIDGE REHABILITATION PROJECT (ELEMENT SPECIFIC)
VARIOUS BRIDGES ON INTERSTATE 481
TOWNS OF DEWITT AND CICERO
ONONDAGA COUNTY
P.I.N. 305613 B.I.N. 1093572

NOTES:

1. ALL REINFORCEMENT TO REMAIN.
2. RESTORE TO ORIGINAL DIMENSIONS.
3. PEDESTALS NUMERICALLY NUMBERED FROM WEST TO EAST.
4. FOR THE CONCRETE REPAIR AREAS, THE CONCRETE SHALL BE REMOVED TO AT LEAST 40mm MIN. BEYOND THE ENCOUNTERED REINFORCEMENT AND TO SOUND CONCRETE, A.O.B.E.
5. ELEVATIONS SHOWN ARE FROM ORIGINAL CONTRACT PLANS F.I.S.H. 70-7 AND ARE FOR REFERENCE ONLY.
6. REMOVAL DIMENSIONS SHOWN ON PLANS ARE ESTIMATED AND SHALL BE FIELD VERIFIED BY THE CONTRACTOR PRIOR TO BEGINNING OF REMOVAL OPERATIONS A.O.B.E.
7. PERFORM BEARING RESTORATION TO ALL EXPANSION BEARINGS (TO INCLUDE RESETTING OF UNDEREXTENDED OR OVEREXTENDED BEARINGS). SEE DWG. PR17-1S FOR BEARING RESTORATION NOTES. SEE DWG. BR-10 & BR-11 FOR BEARING RESTORATION DETAILS.
8. SEE DWG. PR17-10N FOR SECTION DD-DD.
9. SEE DWG. PR17-7N FOR SECTION AA-AA.
10. SEE DWG. PR17-13N FOR SECTION KK-KK.
11. ALL CONCRETE REMOVAL SHALL BE SAWCUT TO PRODUCE NEAT REMOVAL LINES. COST TO BE INCLUDED IN THE PRICE BID FOR ITEM 582.05M AND ITEM 582.07M.
12. FOR JACKING NOTES SEE DWG PR17-1S.

• PERFORM STRUCTURAL LIFTING UNDER ITEM 585.02M - STRUCTURAL LIFTING OPERATIONS - TYPE B (LIFTING AT A PIER) OR ITEM 585.03M - STRUCTURAL LIFTING OPERATIONS - TYPE C (LIFTING AT A PIER WHERE THE CONTRACTOR SHALL BE REQUIRED TO LIFT OFF THE FOOTING AND/OR GROUND LEVEL.

JACKING LOADS:

D.L. = 75 MT
L.L. = 50 MT
TOTAL = 125 MT

LEGEND:

ITEM 582.05M - REMOVAL OF STRUCTURAL CONCRETE- REPLACE WITH CLASS A CONCRETE. (CM)

ITEM 582.07M - REMOVAL OF STRUCTURAL CONCRETE - REPLACE WITH VERTICAL OVERHEAD PATCH MATERIAL. (SM)

ALL DIMENSIONS ARE IN mm UNLESS OTHERWISE NOTED

AS BUILT REVISIONS

SIGNATURE DATE

INTERSTATE 481 NB
OVER
CSX RAILROAD YARD
PIER 14

STATE OF NEW YORK
DEPARTMENT OF TRANSPORTATION

FILENAME	REGION	DATE	DRAWING NO.
305613AE_P14	3	10/02	PR17-14N

DESIGN SUPERVISOR ____ JOB MANAGER ____ DESIGNED BY ____ ESTIMATED BY ____ DRAFTED BY ____ CHECKED BY ____ CHECKED BY

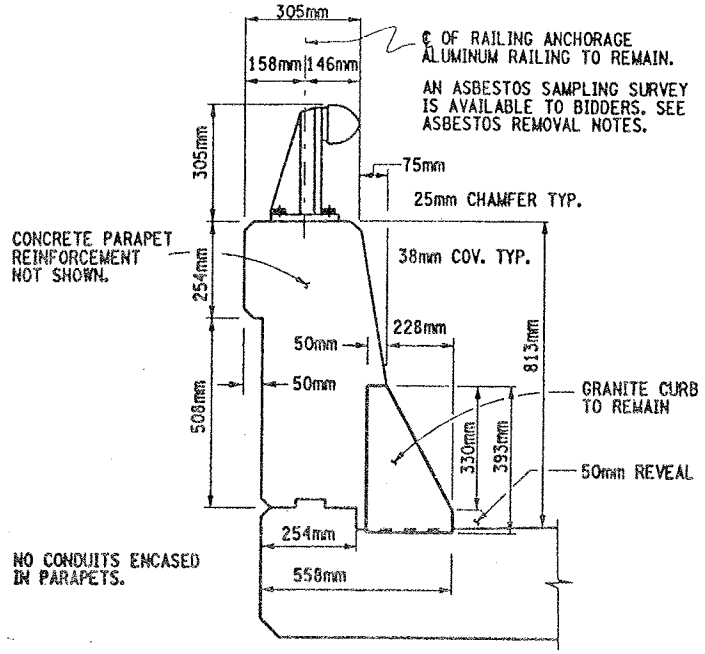

TYPICAL SECTION THRU SUPERSTRUCTURE
PARAPET CONCRETE DETAILS

NOT TO SCALE

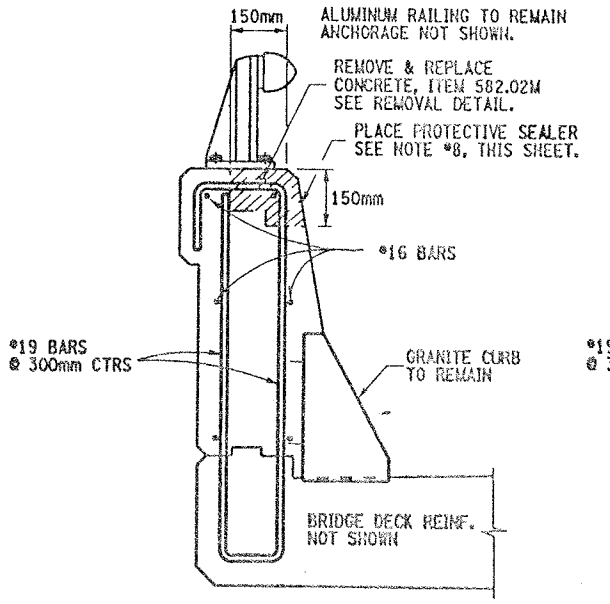

(I) REPAIR DETAILS
150mmX150mm TOP

NOT TO SCALE

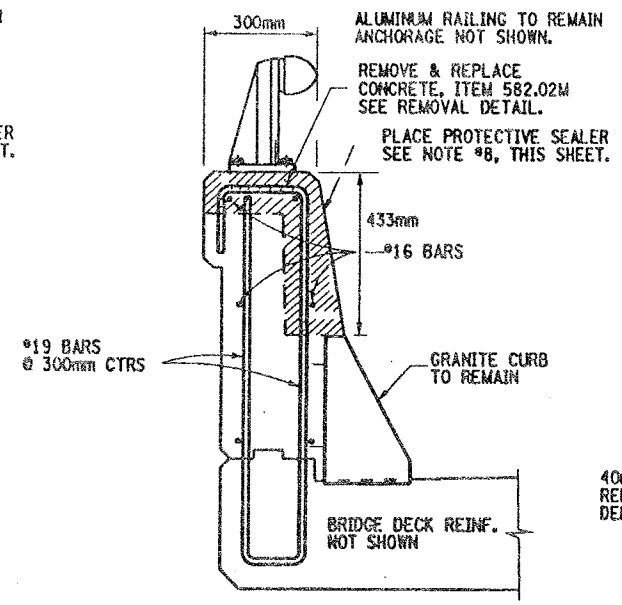

(II) REPAIR DETAILS
FULL TOP & FRONT FACE

NOT TO SCALE

CONCRETE REMOVAL NOTES:

REMOVE ALL DETERIORATED CONCRETE TO SOUND CONCRETE AND AT LEAST 40mm BEYOND ENCOUNTERED REINFORCEMENT BARS, AOBE. PAYMENT TO BE PAID UNDER ITEM 582.05M.

CONCRETE REMOVAL, SAWCUT 6mm DEPTH MINIMUM TO PRODUCE NEAT REMOVAL LINES, ALL COSTS SHALL BE INCLUDED IN PRICE BID FOR ITEM 582.05M.

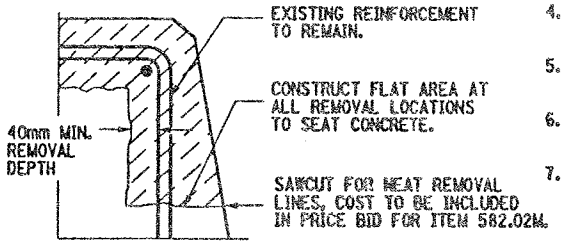

TYPICAL REMOVAL DETAIL

NOT TO SCALE

FED ROAD REG. NO.	STATE	CONTRACT NO.	SHEET NO.	TOTAL SHEETS
1	N.Y.	D259214	330	432

BRIDGE REHABILITATION PROJECT (ELEMENT SPECIFIC)
VARIOUS BRIDGES ON INTERSTATE 481
TOWNS OF DEWITT AND CICERO
ONONDAGA COUNTY
P.I.N. 305613 B.I.N. 1093571 & 1093572

CONCRETE PARAPET REPAIR NOTES:

1. ALUMINUM RAILING TO REMAIN, ANCHORAGE NOT SHOWN.
2. EXISTING PARAPET REINFORCEMENT TO REMAIN.
3. GRANITE CURB TO REMAIN, ANCHOR BARS NOT SHOWN.
4. REMOVAL OF CONCRETE TO LIMITS SHOWN, AOBE. SEE TYPICAL REMOVAL DETAIL, THIS SHEET.
5. ALL DIMENSIONS SHOWN FOR CONCRETE REMOVAL ARE APPROXIMATE AND SHALL BE FIELD VERIFIED.
6. CONTRACTOR SHALL RESTORE CONCRETE PARAPET TO ORIGINAL DIMENSIONS.
7. IT IS DESIRABLE TO RETAIN ALL EXISTING GRANITE CURB, BUT AT SOME LOCATIONS ADJACENT TO THE JOINT BLOCK-OUTS IT MAY BE NECESSARY TO REPLACE OR REPAIR THE SECTION OF CURB, TO THE SATISFACTION OF THE ENGINEER. COST TO BE INCLUDE IN PRICE BID FOR ITEM 582.05M.
8. AFTER PARAPET REPAIRS ARE COMPLETED AND SUFFICIENT CURE TIME AS DECIDED BY ENGINEER, APPLY A COATING TYPE PROTECTIVE SEALERS WHICH MEETS MATERIAL SPECIFICATION 717-04. THIS PROTECTIVE SEALER SHALL BE APPLIED TO THE FRONT FACE AND TOP OF ALL PARAPETS (REPAIRED AREAS & ORIGINAL AREAS) TO ENSURE A UNIFORMED APPEARANCE. COST OF THIS SEALER TO BE INCLUDED IN PRICE BID FOR ITEM 18559.1696 M.

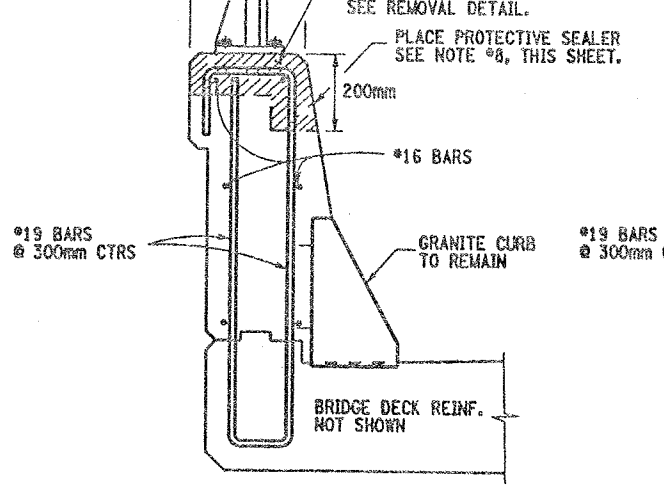

(III) REPAIR DETAILS
FULL TOP & 200mm FACE

NOT TO SCALE

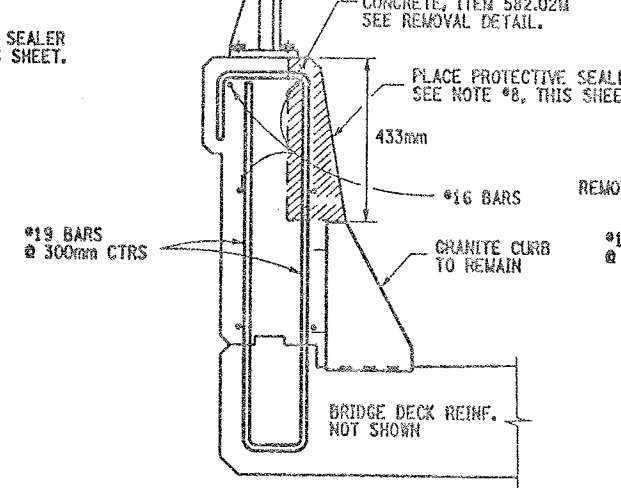

(IV) REPAIR DETAILS
FRONT FACE

NOT TO SCALE

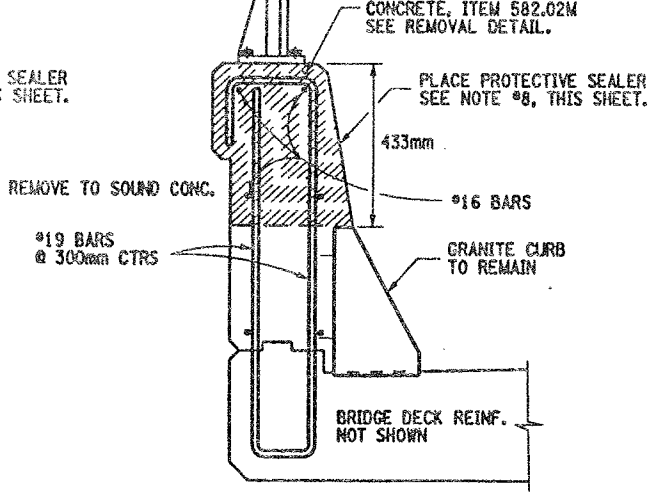

(V) REPAIR DETAILS
FULL SECTION

NOT TO SCALE

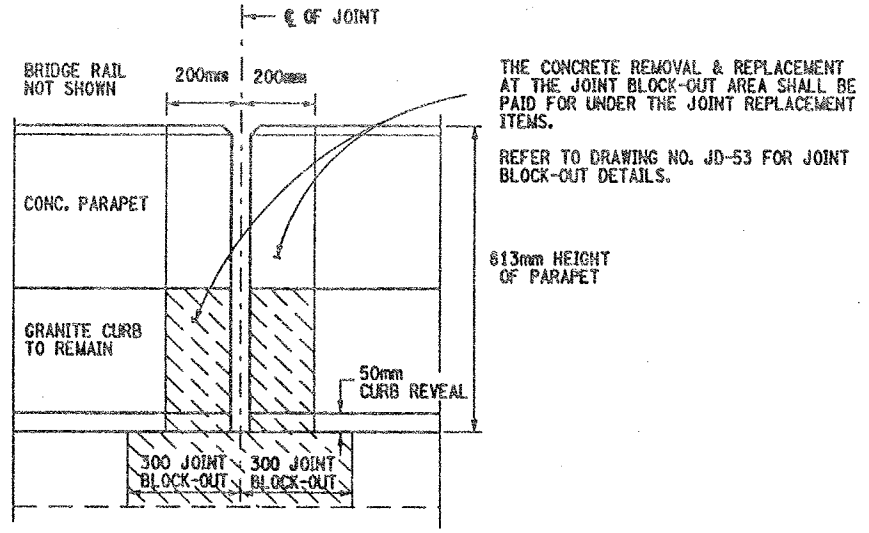

FRONT FACE PARAPET CONCRETE DETAIL
SHOWS TYPICAL CONC. REMOVAL AT JOINT

NOT TO SCALE

ASBESTOS MATERIAL REMOVAL NOTES:

THE REMOVAL OF ALL ASBESTOS CONTAINING CAULK (ITEM 210.5433M) SHALL BE COMPLETED PRIOR TO COMMENCEMENT OF ANY PARAPET REPAIR WORK.

THIS REMOVAL OF THE ASBESTOS CAULK SHALL BE PERFORMED AT EACH BRIDGE RAIL BASE PLATE ON BOTH N.B. & S.B. BRIDGES. (REMOVE ASBESTOS CALKING AT ALL RAIL BASE PLATES BOTH BRIDGES)

AFTER COMPLETION OF THE PARAPET REPAIRS INSTALL A CAULKING COMPOUND AROUND THE BASE PLATES OF THE RAILING WHICH MEETS MATERIAL SPECIF. 705-06 AND IS ACCEPTABLE TO THE ENGINEER. PAID UNDER ITEM 210.5433M.

REFER TO ORIGINAL CONTRACT PLANS F.I.S.H. 70-7 FOR RAIL LAY-OUT DETAILS.

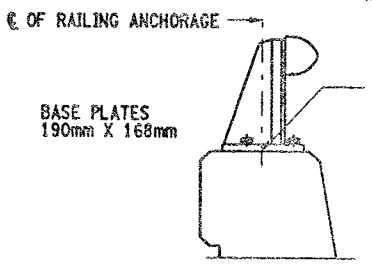

REMOVE EXISTING GRAY ASBESTOS CAULKING COMPOUND AT THE ALUMINUM RAILING BASE PLATES, IT IS ASSUMED THAT THE CAULK COMPOUND IS SURROUNDING (PERIMETER) THE RAILING BASE PLATES. THIS PERIMETER REMOVAL OPERATION SHALL BE PERFORM AT EACH RAILING BASE PLATE ON BOTH STRUCTURES.

HOWEVER, SOME CAULK MATERIAL MAY BE FOUND UNDER THE RAILING BASE PLATES. THIS CAULKING COMPOUND UNDER THE BASE PLATES SHALL BE REMOVED ONLY AT LOCATIONS WHERE THE PARAPET CONCRETE REPAIRS WILL DISTRUB THE MATERIAL (REMOVAL AS ENCOUNTERED).

ALL COSTS TO BE PAID UNDER ITEM 210.5433M. SEE ASBESTOS MATERIAL REMOVAL NOTES, THIS SHEET.

TYPICAL BRIDGE RAIL DETAIL

NOT TO SCALE

ITEMS USED:

ITEM 582.05M - REMOVAL OF STRUCTURAL CONCRETE REPLACE WITH CLASS "A" CONCRETE (CM)

ITEM 210.5433M - REMOVAL & DISPOSAL OF ASBESTOS CONTAINING CAULK (BV 12) (LS)

ITEM 18559.1696M - PROTECTIVE SEALING OF STRUCTURAL CONCRETE (SM)

ALL DIMENSIONS ARE IN mm UNLESS OTHERWISE NOTED

AS BUILT REVISIONS

SIGNATURE DATE

INTERSTATE 481 OVER CSX RR YARD

PARAPET REPAIR DETAILS

STATE OF NEW YORK
DEPARTMENT OF TRANSPORTATION

FILENAME	REGION	DATE	DRAWING NO.
305613AB.R1A	3	10/02	PW17-1

ESTIMATED BY ____ DRAFTED BY ____ CHECKED BY ____
DESIGN SUPERVISOR ____ JOB MANAGER ____ DESIGNED BY ____

FED ROAD REG. NO.	STATE	CONTRACT NO.	SHEET NO.	TOTAL SHEETS
1	N.Y.	D259214	332	432

BRIDGE REHABILITATION PROJECT (ELEMENT SPECIFIC)
VARIOUS BRIDGES ON INTERSTATE 481
TOWNS OF DEWITT AND CICERO
ONONDAGA COUNTY
P.I.N. 305613 B.I.N. 1093572

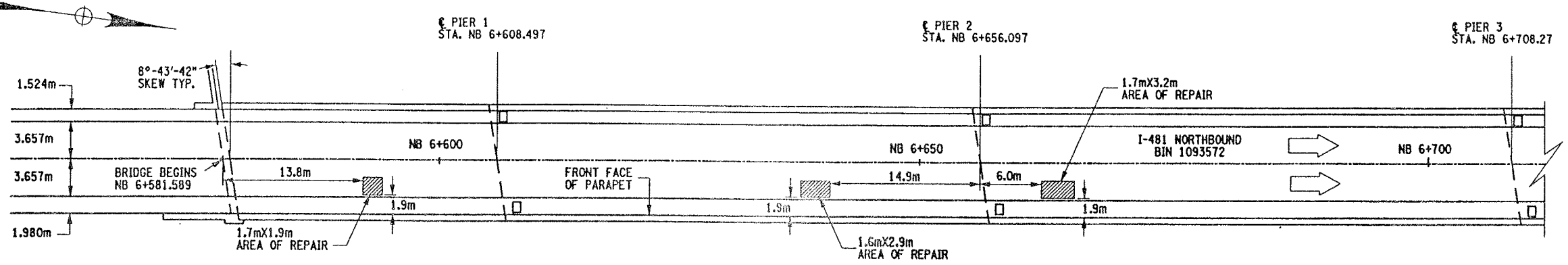

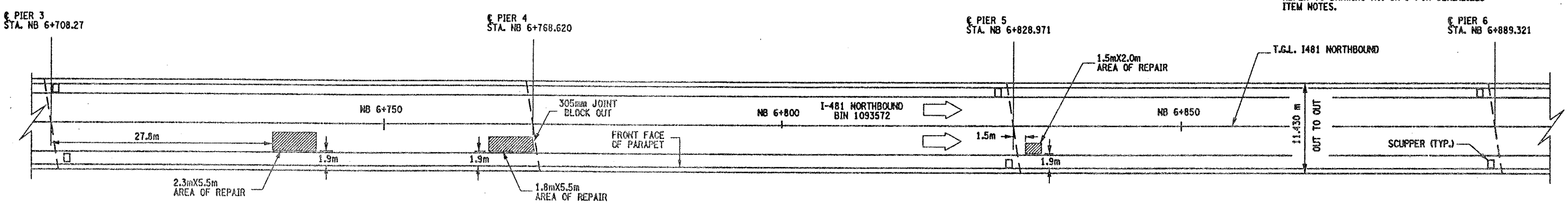

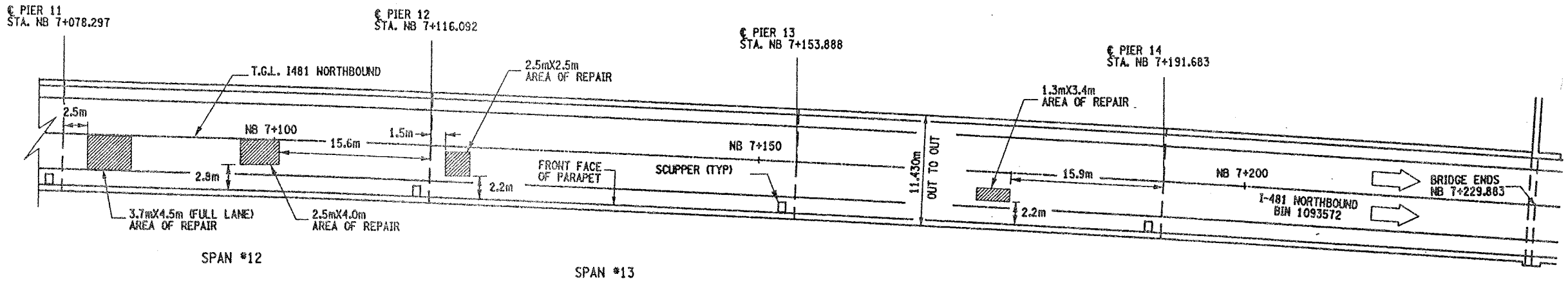

PLAN VIEW OF SPOT DECK REPAIRS

NOT TO SCALE

GENERAL NOTES:

THIS WORK ONLY PERTAINS TO BIN 1093572 NB.

THE AREAS SHOWN ARE THE RESULTS OF FIELD INVESTIGATIONS AND ARE ONLY APPROXIMATE. THE ACTUAL LIMITS SHALL BE AS DIRECTED BY ENGINEER.

NO FULL DEPTH SLAB REPAIRS ARE EXPECTED AT THESE LOCATIONS.

REFER TO DRAWING NO. GN-1 FOR SERIALIZED ITEM NOTES.

REMOVAL NOTES:

ORIGINAL BRIDGE DECK 203mm MONOLITHIC SLAB. A 38mm CONC. OVERLAY HAS BEEN ADDED.

THESE LOCATIONS ARE CURRENTLY FILLED WITH ASPHALT (BLACKTOP). DEPTH OF ASPHALT IS UNKNOWN, ESTIMATED AT @ 38mm. THE REMOVAL OF THE ASPHALT AND CONCRETE TO LIMITS SHOWN TO BE PAID UNDER ITEM 579.02M.

REMOVE CONCRETE TO LIMITS SHOWN AND TO SOUND CONCRETE, AS ORDER BY ENGINEER.

ALL AREAS THAT ARE REPAIRED SHALL ALSO RECEIVE ITEM 558.01 - TRANSVERSE SAWCUT GROOVING AND ITEM 18559.1896M - PROTECTIVE SEALING.

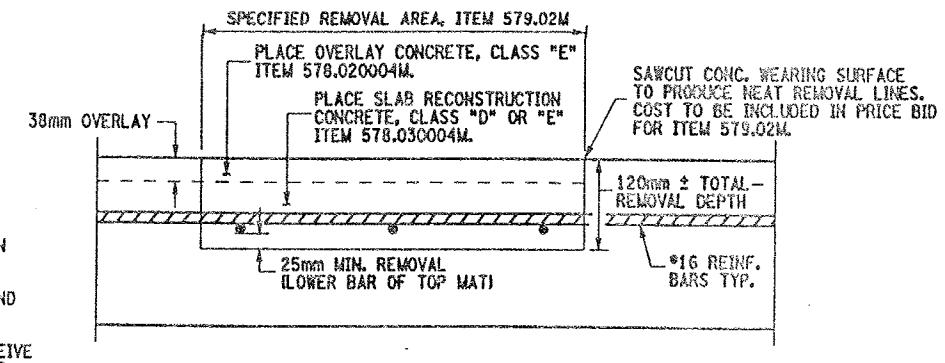

CROSS SECTION VIEW THROUGH REPAIR LOCATION

NOT TO SCALE

ITEMS USED:

ITEM 558.01M - TRANSVERSE SAWCUT GROOVING (SM)
ITEM 18559.1896M - PROTECTIVE SEALING FOR STRUCT. CONC. (SM)
ITEM 578.020004M - OVERLAY CONCRETE, CLASS "E" (SM)
ITEM 578.030004M - SLAB RECONSTRUCTION CONCRETE, CLASS "D" OR "E" (SM)
ITEM 579.02M - REINFORCING BAR EXPOSURE (SM)

ALL DIMENSIONS ARE IN m UNLESS OTHERWISE NOTED

AS BUILT REVISIONS

SIGNATURE DATE

INTERSTATE 481
OVER
CSX RAILROAD YARD
BRIDGE DECK REPAIRS

STATE OF NEW YORK
DEPARTMENT OF TRANSPORTATION

FILENAME	REGION	DATE	DRAWING NO.
305613AB.R1A	3	10/02	DR17-1

DESIGN SUPERVISOR — JOB MANAGER — ESTIMATED BY — DESIGNED BY — DRAFTED BY — CHECKED BY

10935 71

FED ROAD REG. NO.	STATE	CONTRACT NO.	SHEET NO.	TOTAL SHEETS
1	N.Y.	D259214	341	432

BRIDGE REHABILITATION PROJECT (ELEMENT SPECIFIC)
VARIOUS BRIDGES ON INTERSTATE 481
TOWNS OF DEWITT AND CICERO
ONONDAGA COUNTY
P.I.N. 305613 B.I.N. VARIOUS

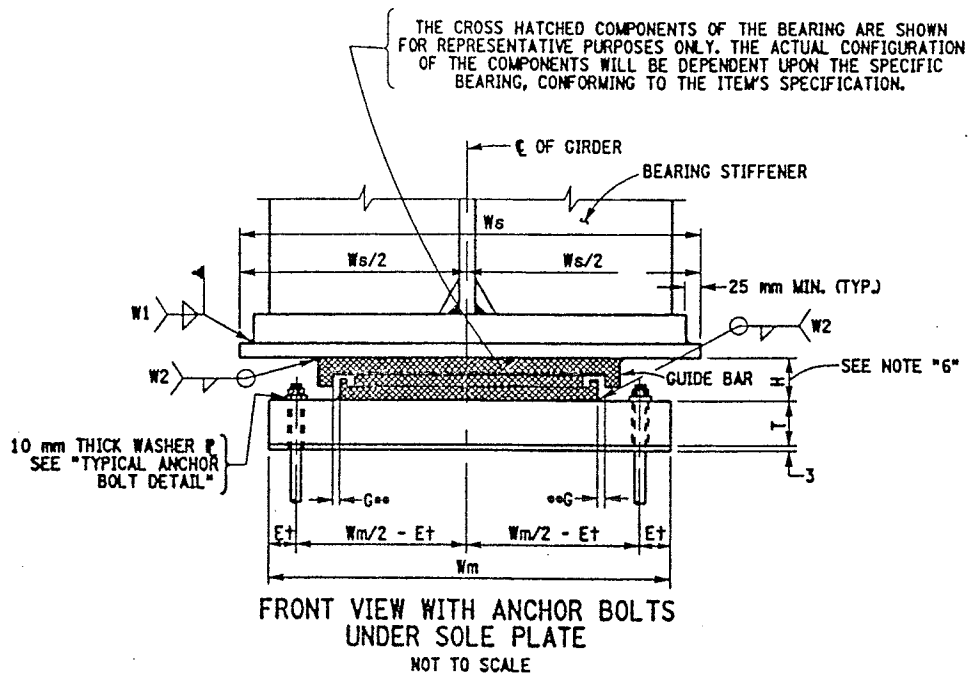

FRONT VIEW WITH ANCHOR BOLTS UNDER SOLE PLATE
NOT TO SCALE

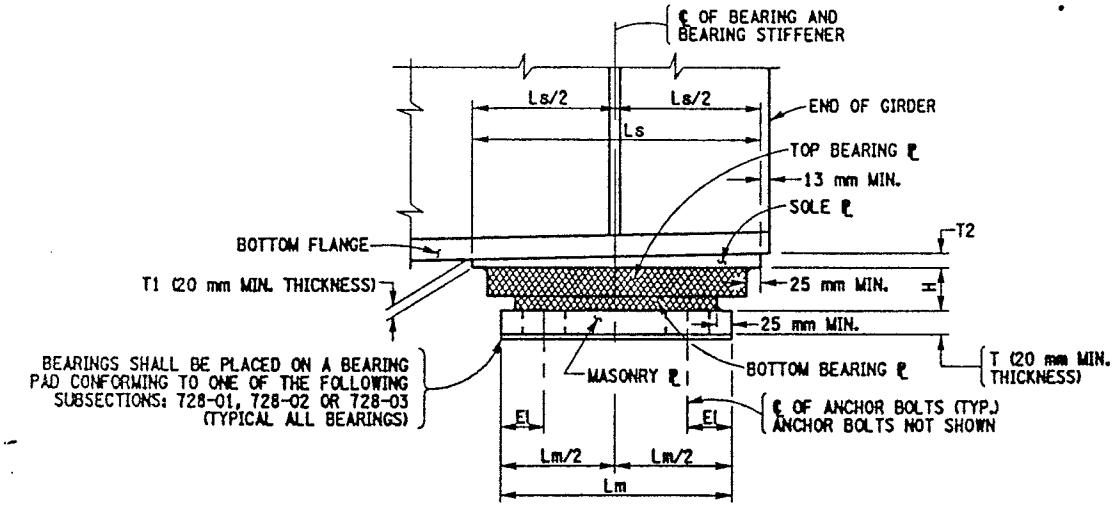

SIDE VIEW AT END OF GIRDER
NOT TO SCALE

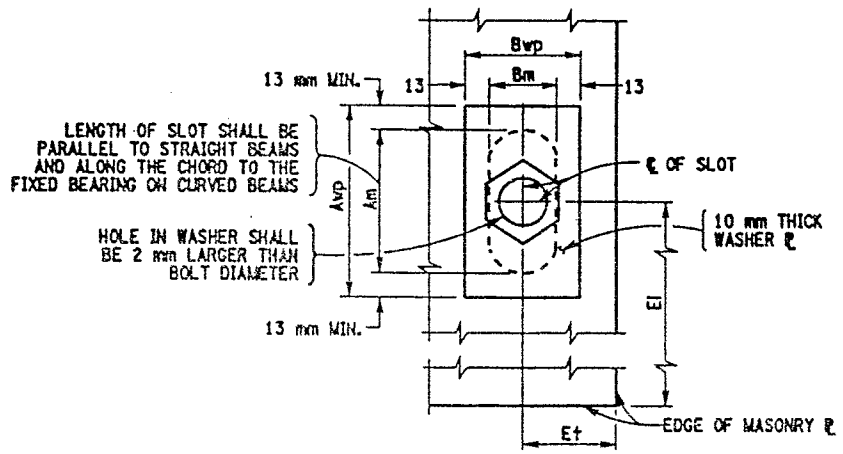

TYPICAL ANCHOR BOLT DETAIL
NOT TO SCALE

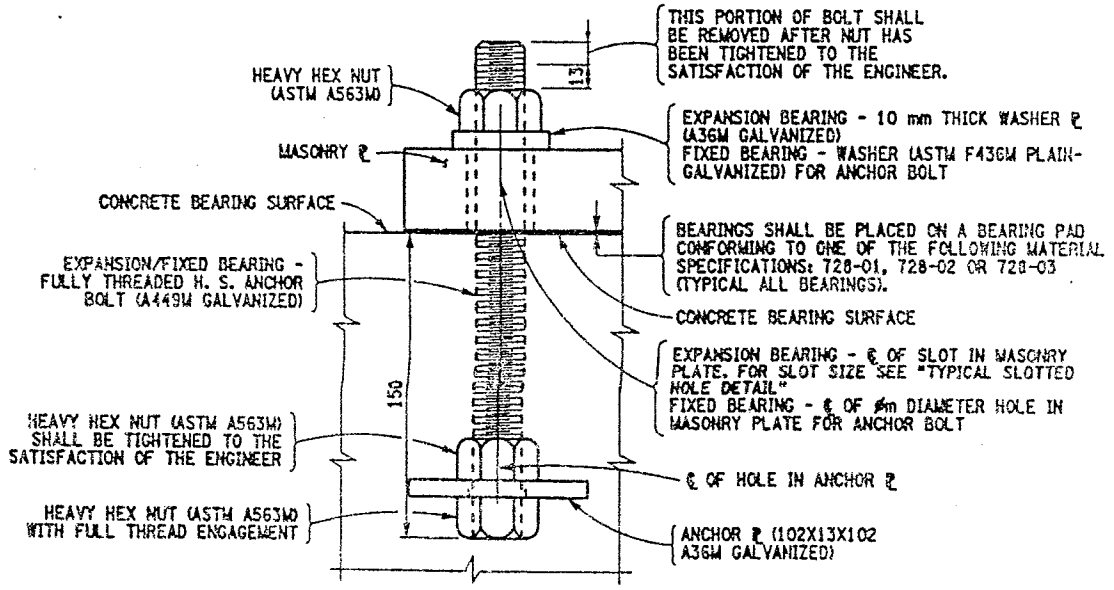

OPTIONAL ANCHOR BOLT DETAIL WITH ANCHOR PLATE ON NEW PEDESTALS
NOT TO SCALE

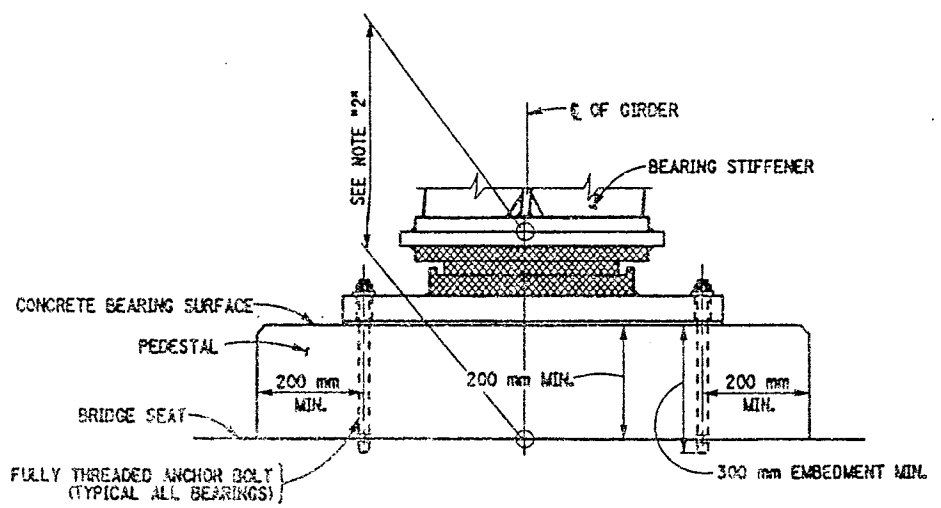

TYPICAL PEDESTAL DETAIL FIXED BEARING SHOWN - EXPANSION BEARING SIMILAR
NOT TO SCALE

NOTES:

THE CONTRACTOR SHALL SUPPLY MULTI-ROTATIONAL STRUCTURAL BRIDGE BEARINGS CONFORMING TO THE REQUIREMENTS OF STANDARD SPECIFICATION SECTION 565 AND SUBJECT TO THE FOLLOWING CONDITIONS:

1. THE BEARING DEVICES SUPPLIED SHALL BE CAPABLE OF TRANSMITTING THE LOADS AND MOVEMENT SHOWN ON THESE PLANS.
2. THE DIMENSION "H" IN THE BEARING TABLE REPRESENTS THE ASSUMED TOTAL HEIGHT OF BEARING MECHANISM BETWEEN THE SOLE PLATE AND MASONRY PLATE USED BY THE DESIGNER TO ESTABLISH THE PEDESTAL ELEVATIONS. THE MINIMUM PEDESTAL HEIGHT SHALL NOT BE CHANGED WITHOUT WRITTEN APPROVAL OF THE DEPUTY CHIEF ENGINEER (STRUCTURES).
3. MASONRY PLATES ARE TO BE DESIGNED. THE MINIMUM CONCRETE EDGE DISTANCE SHALL BE 75 mm AND THE MINIMUM ANCHOR BOLT COVER SHALL BE 200 mm.
4. THE BEARING DEVICE, MASONRY PLATE, SOLE PLATE, ANCHOR BOLTS, NUTS, WASHER PLATES AND BEARING PAD SHALL BE INCLUDED IN THE UNIT PRICE BID FOR THE BEARING ITEMS.
5. ALL EXPANSION BEARINGS SHALL HAVE A MAXIMUM FRICTION COEFFICIENT OF 3%.
6. IF THE ANCHOR BOLTS ARE SET UNDER THE SOLE PLATE, A MINIMUM CLEARANCE EQUAL TO TWO TIMES THE THICKNESS OF ANCHOR NUT PLUS 25 mm SHALL BE MAINTAINED BETWEEN THE TOP OF MASONRY PLATE AND BOTTOM OF THE SOLE PLATE.
7. ALL STEEL SHALL CONFORM TO ASTM A588M.
8. ALL METAL COMPONENTS OF THE BEARING SYSTEM WHICH ARE LIABLE TO COME INTO CONTACT DURING THE TRANSLATION SHALL HAVE A TEFLON SLIDING SURFACE FINISH.
9. ALL STEEL FABRICATION SHALL CONFORM TO THE PROVISIONS OF THE LATEST EDITION OF THE NEW YORK STATE STEEL CONSTRUCTION MANUAL.

WHENEVER JACKING OF THE SUPERSTRUCTURE IS NEEDED TO RESET THE BEARINGS, THE CONTRACTOR SHALL SUBMIT A JACKING SEQUENCE TO THE E.I.C. FOR APPROVAL.

LIST OF ITEMS USED:

ITEM 565.1522M - TYPE M.R. EXPANSION BEARING (1001 TO 2000KN) (EA)
ITEM 565.1722M - TYPE M.R. FIXED BEARING (1001 TO 2000KN) (EA)

*ONE WAY LONGITUDINAL MOVEMENT IS THE MAXIMUM ONE WAY MOVEMENT (EXPANSION OR CONTRACTION) OF THE SUPERSTRUCTURE WHEN BEARINGS ARE SET @ 20°C PLUS 25 MILLIMETERS OF TOLERANCE.

**ON WIDE STRUCTURES AND ON CURVED STRUCTURES PROVISIONS SHALL BE MADE FOR LIMITED LATERAL MOVEMENT.

ALL DIMENSIONS ARE IN m UNLESS OTHERWISE NOTED

AS BUILT REVISIONS

SIGNATURE DATE

MULTI ROTATIONAL BEARINGS

STATE OF NEW YORK
DEPARTMENT OF TRANSPORTATION

FILENAME	REGION	DATE	DRAWING NO.
305613AE.M1A	3	10/02	BR-1

DESIGN SUPERVISOR ____ JOB MANAGER ____ DESIGNED BY ____ DRAFTED BY ____ ESTIMATED BY ____ CHECKED BY ____ CHECKED BY ____

10935 72

FED ROAD REG. NO.	STATE	CONTRACT NO.	SHEET NO.	TOTAL SHEETS
1	N.Y.	D259214	350	432

BRIDGE REHABILITATION PROJECT (ELEMENT SPECIFIC)
VARIOUS BRIDGES ON INTERSTATE 481
TOWNS OF DEWITT AND CICERO
ONONDAGA COUNTY
P.I.N. 305613 | B.I.N. 1093571 & 1093572

DRAFTED BY ____ CHECKED BY ____
ESTIMATED BY ____ DESIGNED BY ____
JOB MANAGER ____
DESIGN SUPERVISOR ____

PIER	SPAN-GIRDER	EXP. BRG. TYPE	SOLE ℄ DIM. "A"
SB-P1	2 - ALL	III	584
SB-P3	4 - 1&4	II	813
SB-P3	4 - 2&3	II	660
SB-P6	7 - 1&4	II	508
SB-P6	7 - 2&3	I	610
SB-P7	8 - 1&4	I	635
SB-P7	8 - 2&3	I	610
SB-P9	10 - ALL	I	660
SB-P10	11 - 1&4	I	635
SB-P10	11 - 2&3	I	610
SB-P11	12 - 1&4	I	635
SB-P11	12 - 2&3	I	610
SB-P13	14 - 1&4	I	635
SB-P13	14 - 2&3	I	610
NB-P1	1 - ALL	III	584
NB-P2	3 - 1&4	III	762
NB-P2	3 - 2&3	III	711
NB-P3	4 - 1&4	II	813
NB-P3	4 - 2&3	II	660
NB-P4	5 - 1&4	II	813
NB-P4	5 - 2&3	II	660
NB-P6	7 - 1&4	II	508
NB-P6	7 - 2&3	II	610
NB-P7	8 - 1&4	II	635
NB-P7	8 - 2&3	I	610
NB-P8	9 - 1&4	I	635
NB-P8	9 - 2&3	I	610
NB-P10	11 - 1&4	I	635
NB-P10	11 - 2&3	I	610
NB-P11	12 - 1&4	I	635
NB-P11	12 - 2&3	I	610

ITEM CLARIFICATION NOTE:

ITEM 589.52NNNNM, REMOVAL OF EXISTING STEEL IS A SERIALIZED ITEM AND THE FOLLOWING PAY ITEMS SHALL BE INCORPORATED BY BRIDGE:
BIN 1093571 SB SHALL USE ITEM 589.520001M
BIN 1093572 NB SHALL USE ITEM 589.520002M

ITEM 571.01NNNNM - THE TREATMENT AND DISPOSAL OF PAINT REMOVAL WASTE IS A SERIALIZED ITEM AND THE FOLLOWING PAY ITEMS SHALL BE INCORPORATED BY BRIDGE:
BIN 1093571 SB SHALL USE ITEM 571.010001M
BIN 1093572 NB SHALL USE ITEM 571.010002M

ITEM 570.10NNNNM - ENVIRONMENTAL GROUND PROTECTION IS A SERIALIZED ITEM AND THE FOLLOWING PAY ITEMS SHALL BE INCORPORATED BY BRIDGE.
BIN 1093571 SB SHALL USE ITEM 570.090001M
BIN 1093572 NB SHALL USE ITEM 570.090002M

ITEM 570.09NNNNM - ENVIRONMENTAL WATER PROTECTION IS A SERIALIZED ITEM AND THE FOLLOWING PAY ITEMS SHALL BE INCORPORATED BY BRIDGE
BIN 1093571 SB SHALL USE ITEM 570.100001M
BIN 1093572 NB SHALL USE ITEM 570.100002M

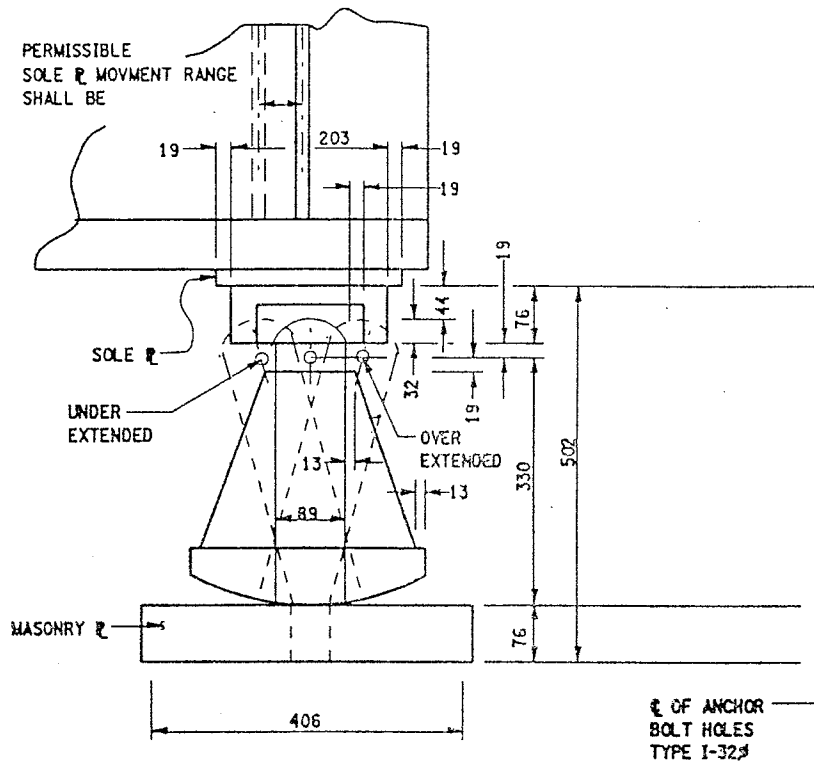

SIDE ELEVATION

NOT TO SCALE

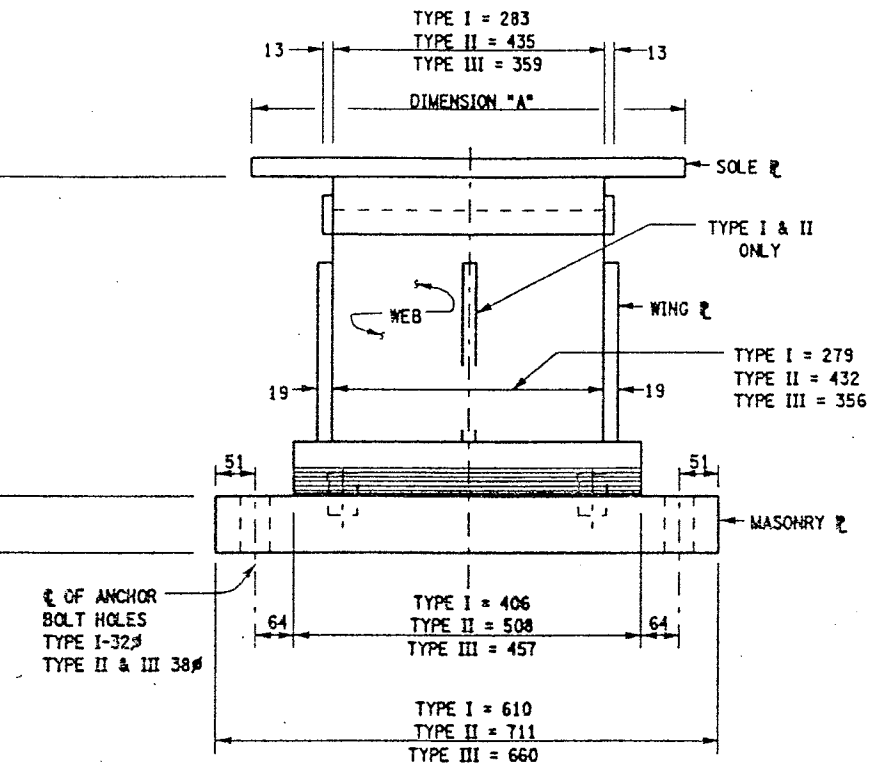

END ELEVATION

NOT TO SCALE

EXISTING HIGH ROCKER EXPANSION BEARING
BIN 1093571 & BIN 1093572

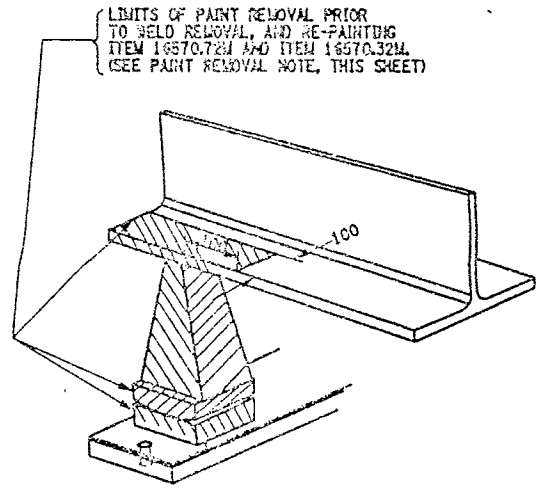

PAINT REMOVAL DETAIL

SCALE: 1 TO 5

PAINT REMOVAL NOTE:

1. IN CONJUNCTION WITH THE USE OF ITEM 16570.32M AND ITEM 16570.76M. ITEM 571.01NNNNM - TREATMENT & DISPOSAL OF PAINT REMOVAL WASTE AND EITHER ITEM 570.10NNNNM - ENVIRONMENTAL GROUND PROTECTION OR ITEM 570.09NNNNM - ENVIRONMENTAL WATER PROTECTION SHALL ALSO BE INCORPORATED DURING THE PAINT REMOVAL OPERATIONS.
2. ALL NEW PARTS INSTALLED AT THIS LOCATION SHALL BE INCLUDED IN THE UNIT PRICE BID FOR ITEM 15565.4302. THE CONTRACTOR WILL BE PAID FOR A QUANTITY OF ONE FOR ALL NEW MATERIALS AT THIS LOCATION.
3. ALL EXISTING SURFACES SHALL BE CLEANED AND LUBRICATED TO ENSURE FREE MOVEMENT, ITEM 15565.4302M.

LIST OF ITEMS USED:

ITEM 571.010001M - TREATMENT AND DISPOSAL OF PAINT REMOVAL WASTE (CM)
ITEM 571.010002M - TREATMENT AND DISPOSAL OF PAINT REMOVAL WASTE (CM)
ITEM 15565.4302M - BRIDGE BEARING RESTORATION (EA)

BRIDGE BEARING RESTORATION NOTES:

1. BRIDGE BEARING RESTORATION ITEM 15565.4302M SHALL INCLUDE ALL DESIGNATED WORK AS PER THE SPECIFICATION.
2. STRUCTURAL LIFTING SHALL BE USED WITH ALL EXPANSION BEARING RESTORATION.
3. IF THE CONTRACTOR ELECTS TO LIFT ONLY ONE GIRDER AT A TIME PER SPAN (TO A MAXIMUM OF 3 mm TO REMOVE LOAD FROM BEARINGS), NO VEHICULAR TRAFFIC RESTRICTIONS WILL BE REQUIRED AS STATED IN SPECIFICATIONS SECTON 585-STRUCTURAL LIFTING OPERATIONS.
4. BEARING RESTORATION SHALL AS A MINIMUM, AND IN ALL CASES INCLUDE REPLACEMENT OF BRONZE PLATE.
5. FIXED BEARING TO BE CLEANED IN PLACE. DO NOT DISASSEMBLE.
6. ON BINS 1093571 & 1093572, BRIDGE BEARING RESTORATION ITEM 15564.4302M FOR THE HIGH ROCKER BEARINGS SHALL INCLUDE ONLY THOSE BEARINGS SHOWN ON DWG BR-11 WHICH ARE EITHER OVER EXTENDED OR UNDER EXTENDED MORE THAN 5° FROM WHAT SHOULD BE ANTICIPATED FOR THE AMBIENT TEMPERATURE. THOSE EXPANSION BEARINGS WHICH ARE BEING RESTORED SHALL BE RESET TO ORIGINAL SPECIFICATIONS.

JACKING NOTES:

THE METHOD OF LIFTING SHALL BE APPROVED BY THE DEPUTY CHEIF ENGINEER (STRUCTURES), DSES, TWO WEEKS PRIOR TO THE START OF THE WORK.

NO LIFTING WILL BE ALLOWED UNTIL ALL TEMPORARY SUPPORTS ARE SECURED.

WHEN POSSIBLE, THERE WILL BE NO LIVE LOAD DURING LIFTING.

LIFTING SHALL BE CONFINED TO ONE END OF A SPAN AT ANY ONE TIME.

IF THE CONTRACTOR ELECTS TO LIFT ONLY ONE GIRDER AT A TIME PER PIER (TO A MAXIMUM OF 3 mm TO REMOVE LOAD FROM BEARING), NO VEHICULAR TRAFFIC RESTRICTIONS WILL BE REQUIRED AS STATED IN THE SPECIFICATION SECTION 585-STRUCTURAL LIFTING OPERATIONS.

ALL DIMENSIONS ARE IN mm UNLESS OTHERWISE NOTED

AS BUILT REVISIONS

SIGNATURE ____ DATE ____

INTERSTATE 481 SB & NB
OVER
CSX RAILROAD

BEARING RESTORATION DETAILS

STATE OF NEW YORK
DEPARTMENT OF TRANSPORTATION

FILENAME	REGION	DATE	DRAWING NO.
305613ZZM1A	3	10/02	BR-10

FED ROAD REG. NO.	STATE	CONTRACT NO.	SHEET NO.	TOTAL SHEETS
1	N.Y.	D259214	365	432

BRIDGE REHABILITATION PROJECT (ELEMENT SPECIFIC)

VARIOUS BRIDGES ON INTERSTATE 481

TOWNS OF DEWITT AND CICERO

ONONDAGA COUNTY

P.I.N. 305613 | B.I.N. ALL BIN'S

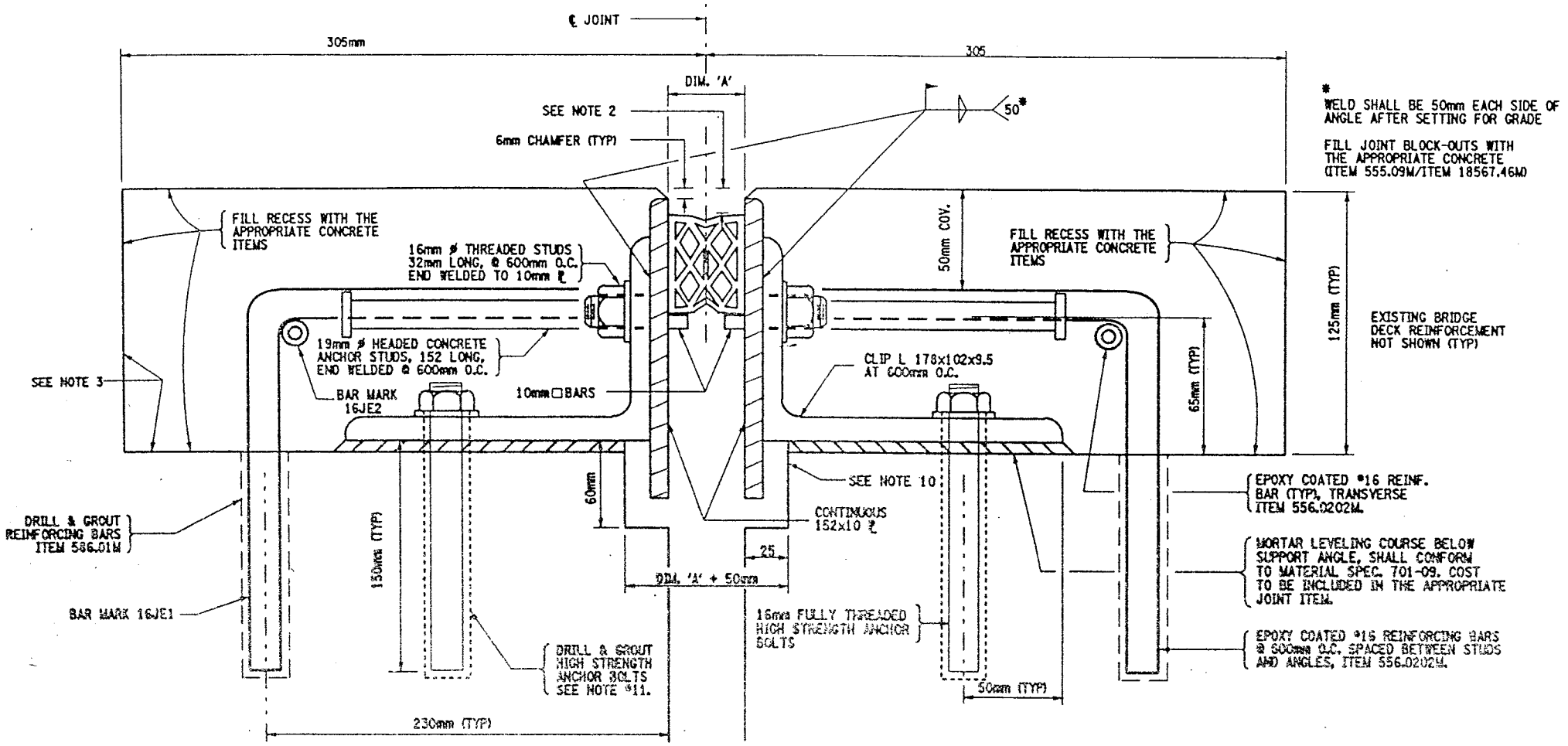

* WELD SHALL BE 50mm EACH SIDE OF ANGLE AFTER SETTING FOR GRADE

FILL JOINT BLOCK-OUTS WITH THE APPROPRIATE CONCRETE (ITEM 555.09M/ITEM 18567.46M)

MODIFIED ARMORED COMPRESSION JOINT DETAIL

FOR INSTALLATION LOCATIONS SEE JOINT TABLE

NOT TO SCALE

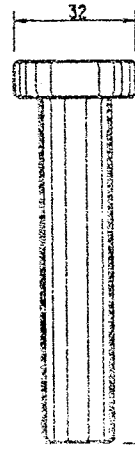

DETAIL OF HEADED CONCRETE ANCHOR STUD

NOT TO SCALE

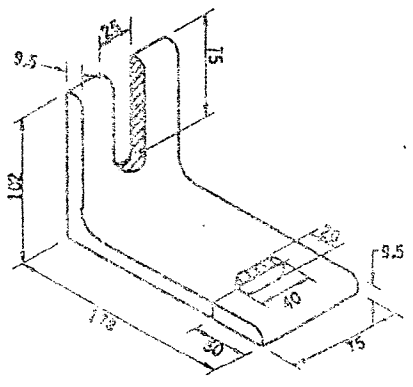

DETAIL OF CLIP ANGLE

NOT TO SCALE

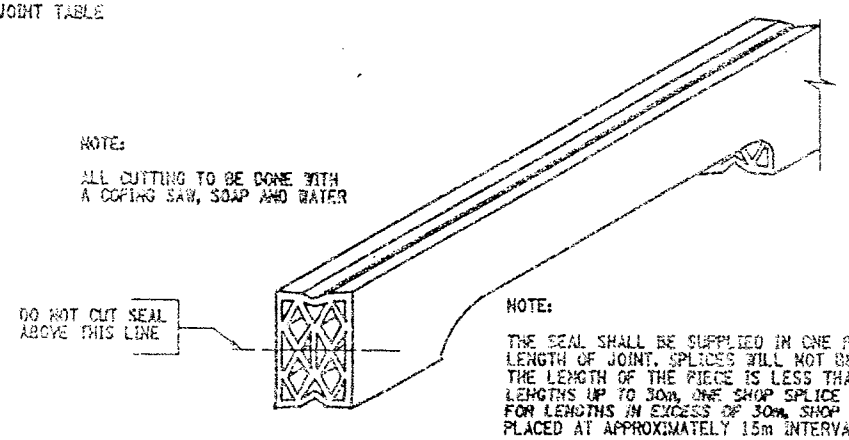

DETAIL FOR CUTTING SEAL

NOT TO SCALE

GENERAL NOTES:

1. THE TEMPERATURE OF THE BRIDGE MUST BE TAKEN ON THE STRUCTURAL STEEL SURFACE TO DETERMINE THE TEMPERATURE CORRECTION FOR THE JOINT OPENINGS.
2. THIS DEPTH SHALL BE INDICATED ON THE SHOP DRAWINGS AND SHALL BE SUCH THAT WHEN THE SEAL IS COMPRESSED TO 50% OF ITS NORMAL WIDTH, THE TOP OF THE SEAL SHALL BE NOT LESS THAN 6mm NOR MORE THAN 19mm BELOW THE TOP OF THE ROADWAY.
3. RECESSES RECEIVING ITEM 555.09M, AFTER SURFACE PREPARATION, THOROUGHLY WET THE CONCRETE SURFACE AND ALL POROUS SURFACES TO BE IN CONTACT WITH NEW CONCRETE, FOR 12 HOURS. NOTE THE USE OF MATERIAL SPECIF. 705-22 PORTLAND CEMENT MORTAR BONDING GROUT HAS BEEN ELIMINATED, SEE INSERT IN PROJECT PROPOSAL.
4. A WATER-TIGHT INTEGRITY TEST SHALL BE PERFORMED BY THE CONTRACTOR AT ALL COMPRESSION SEAL JOINT INSTALLATIONS. THE FOLLOWING TEST PARAMETERS SHALL BE INCORPORATED IN THE TEST:
   1. A 15 MINUTE MINIMUM PERIOD OF STANDING WATER, WITH A 25mm MINIMUM DEPTH SHALL BE USED.
   2. IN ADDITION, IN LOCATIONS OF COPED AREAS OF THE SEAL, BENDS, ETC., WATER PRESSURE SHALL BE APPLIED, TO THE SATISFACTION OF THE E.I.C FOR A 15 MINUTE PERIOD.
   3. LIMITS OF TEST AREA SHALL BE FROM FACE OF CURB TO FACE OF CURB ON THE DECK SURFACE.
5. NO PAYMENT WILL BE MADE TO THE CONTRACTOR FOR THE JOINT IF, IN THE OPINION OF THE ENGINEER, THE INSTALLED JOINT LEAKS WITHIN THE 15 MINUTE TEST PERIOD.
6. PRIOR TO THE START OF WORK AT EACH JOINT, THE CONTRACTOR SHALL SUBMIT A WRITTEN PLAN FOR THE SPECIFICS OF THE TESTING, INCLUDING CONTAINMENT OF THE WATER AND THE METHOD TO BE USED FOR ACCESS BY THE E.I.C. TO THE BOTTOM OF THE JOINT BEING TESTED.
7. THE COST OF ALL LABOR, EQUIPMENT AND MATERIALS REQUIRED FOR THE TESTING WHICH INCLUDES, BUT IS NOT LIMITED TO:
   1. A CONTAINMENT SYSTEM FOR THE TEST WATER.
   2. PROVISIONS FOR E.I.C. ACCESS TO THE BOTTOM OF THE JOINT.
   SHALL BE INCLUDED IN THE PRICE BID FOR THE RESPECTIVE JOINT ITEMS.
8. THE COST OF ALL LABOR, EQUIPMENT, AND MATERIALS TO INSTALL THE NEW JOINT SHALL BE INCLUDED IN THE UNIT PRICE BID FOR THE APPROPRIATE JOINT ITEM.
9. MORTAR LEVELING COURSE SHALL CONFORM TO MATERIAL SPECIFICATION 701-09 AND SHALL BE INCLUDED IN THE PRICE BID FOR THE APPROPRIATE JOINT ITEM.
10. THE DIMENSIONS OF THE REMOVAL AREA UNDER THE 152x10 PLATES ARE SHOWN TO ALLOW SPACE FOR THE PLATES TO REST FREELY. IF THERE IS ALREADY ADEQUATE SPACE, NO CONCRETE REMOVAL OR REPLACEMENT IS REQUIRED IN THIS AREA.
11. 16 mm ∅ ASTM A325M ANCHOR BOLT TO BE DRILLED AND GROUTED IN PLACE IN ACCORDANCE WITH THE REQUIREMENTS OF SUB-SECTION 586-3.02. GROUTING MATERIALS SHALL BE IN ACCORDANCE WITH MATERIALS SUB-SECTION 701-07 ANCHORING MATERIALS-CHEMICALLY CURING. HOLES TO BE DRILLED TO THE DIAMETER AND DEPTH RECOMMENDED BY THE MANUFACTURER OF THE GROUTING MATERIAL (MIN. DEPTH OF 150 mm). THE COST OF THE ANCHORS, INCLUDING DRILLING AND GROUTING, SHALL BE INCLUDED IN THE UNIT PRICE BID FOR THE APPROPRIATE JOINT SYSTEM ITEM.
12. IT IS DESIRABLE TO HAVE THE ARMORED JOINT WITH ITS COMPRESSION SEAL ASSEMBLED IN THE SHOP AND DELIVERED TO THE JOB SITE ALL SET FOR INSTALLATION IN ITS PREFORMED RECESS IN THE STRUCTURAL SLAB. IN CASES WHERE THE ARMORED JOINT CANNOT BE ASSEMBLED IN THE SHOP, DUE TO ITS EXCESSIVE LENGTH CAUSING SHIPPING PROBLEMS, THE JOINT SHALL BE SEALED WITH THE COMPRESSION SEAL BEFORE THE STRUCTURE IS OPENED TO TRAFFIC INCLUDING CONSTRUCTION TRAFFIC, AND BEFORE DIS CONTINUING OPERATIONS WHEN WORK IS SUSPENDED DURING THE WINTER.

EPOXY POLYSULFIDE GROUT NOTE:

CONTRACTOR MAY WITH THE APPROVAL OF THE ENGINEER USE MATERIAL SPECIFICATION 721-03 EPOXY POLYSULFIDE GROUT, AT THE RECESSES, INSTEAD OF THE 12 HOUR CONTINUOUS PREWETTING REQUIREMENTS (PROJECT PROPOSAL). CONTRACTOR MUST ENSURE PROPER CONSTRUCTION PRACTICES ARE FOLLOWED WHEN USING THIS GROUT. THE USE OF EPOXY POLYSULFIDE GROUT SHALL BE AT NO ADDITIONAL COST TO THE STATE.

SEALS (mm)			ARMORED JOINT SYSTEM	
TYPE	NOMINAL WIDTH	DIM. "A" @ 20°C.	TYPE	END CONDITION
1	44	25	A1	Fixed End Only
2	51	30	A2	Exp. up to 18 m
3	64	38	A3	Exp. over 18 m to 23 m
4	76	44	A4	Exp. over 23 m to 27 m
5	89	52	A5	Exp. over 27 m to 38 m
6	102	60	A6	Exp. over 38 m to 46 m

Maximum Skew Limits: Fixed End - No Limit
Exp. End - 45° A2 thru A6

LIST OF ITEMS USED:

ITEM 555.09M - STRUCT. CONCRETE, CLASS "HP" (CM)
ITEM 556.0202M - EPOXY COATED BAR REINF. FOR STRUCT. (Kg)
ITEM 567.31M - MOD. ARMORED JOINT SYSTEM W/ COMP. SEAL TYPE A1 (m)
ITEM 567.32M - MOD. ARMORED JOINT SYSTEM W/ COMP. SEAL TYPE A2 (m)
ITEM 567.35M - MOD. ARMORED JOINT SYSTEM W/ COMP. SEAL TYPE A5 (m)
ITEM 567.36M - MOD. ARMORED JOINT SYSTEM W/ COMP. SEAL TYPE A6 (m)
ITEM 18567.46M - ELASTOMERIC CONC. FOR BRIDGE JT. SYSTEMS (M)
ITEM 586.01M - DRILL & GROUT REINF. BARS (mm)

ALL DIMENSIONS ARE IN mm UNLESS OTHERWISE NOTED

AS BUILT REVISIONS

SIGNATURE DATE

INTERSTATE 481

COMPRESSION SEAL JOINT DETAILS

STATE OF NEW YORK
DEPARTMENT OF TRANSPORTATION

FILENAME	REGION	DATE	DRAWING NO.
305613AJJA1	3	10/02	JD-1

DESIGN SUPERVISOR ____ JOB MANAGER ____ DESIGNED BY ____ ESTIMATED BY ____ DRAFTED BY ____ CHECKED BY ____ CHECKED BY ____

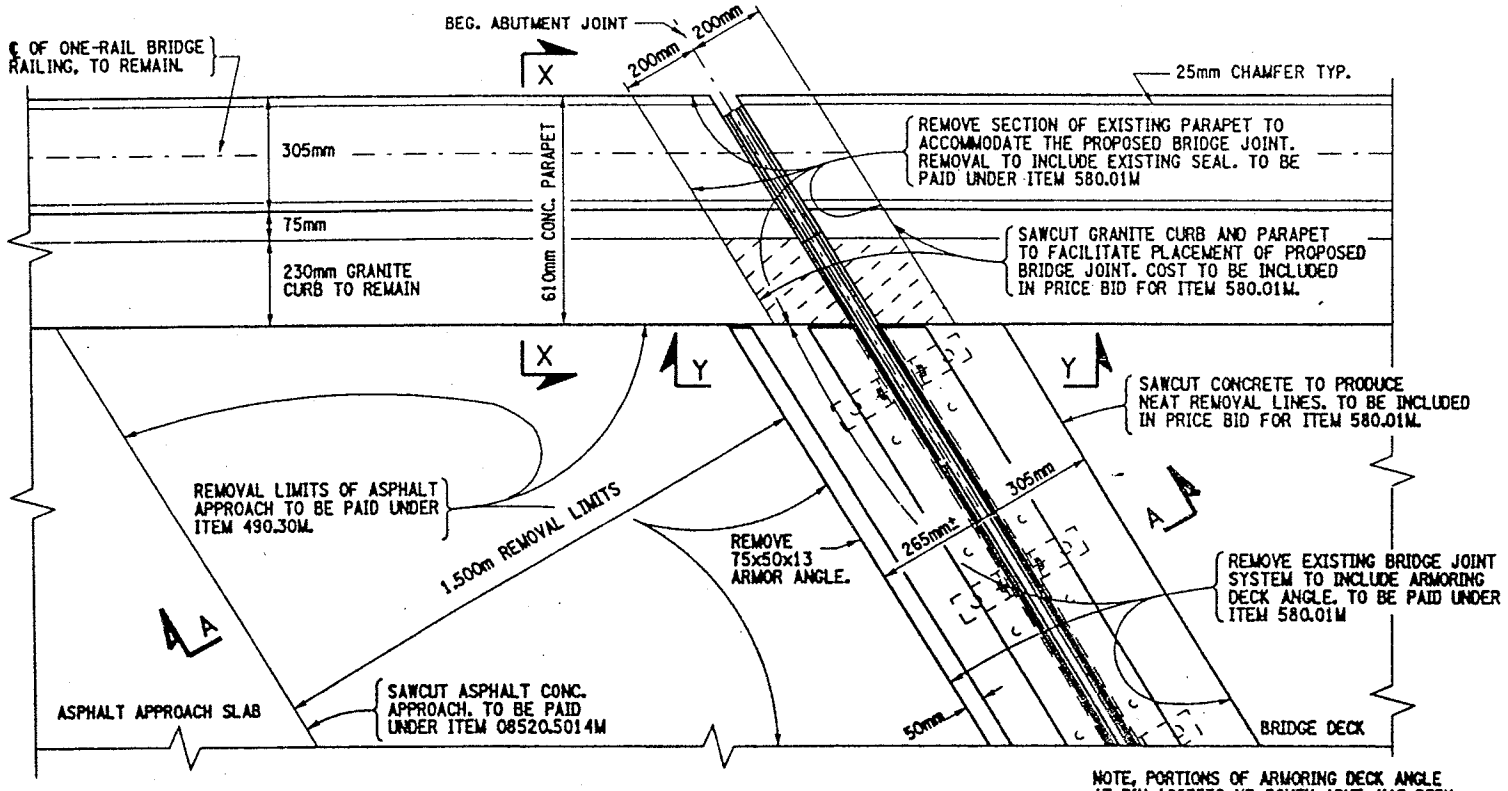

NOTE, PORTIONS OF ARMORING DECK ANGLE AT BIN 1093572 NB SOUTH ABUT. HAS BEEN REMOVED BY STATE MAINT. FORCES.

EXISTING BEG. ABUTMENT JOINT PLAN VIEW

BIN 1093571 - SOUTH ABUT.
BIN 1093572 - SOUTH ABUT.

NOT TO SCALE

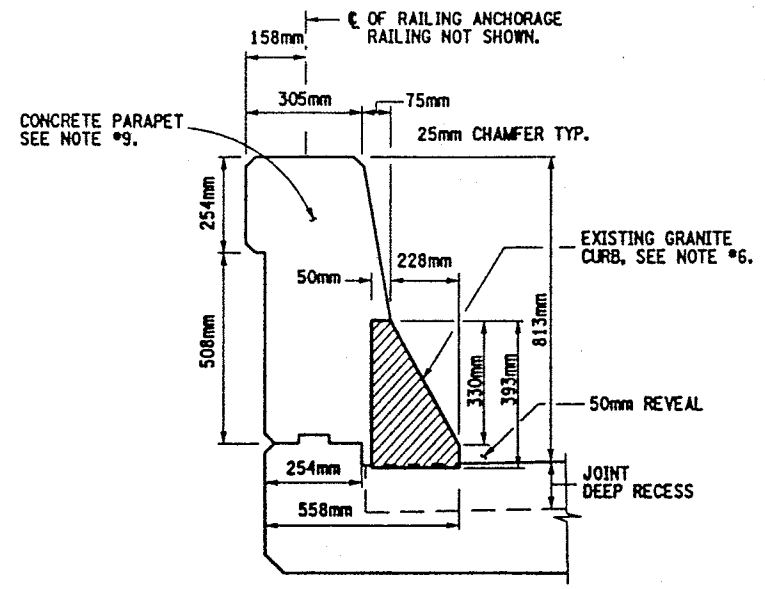

SECTION X-X
PARAPET CONCRETE REMOVAL DETAIL

NOT TO SCALE

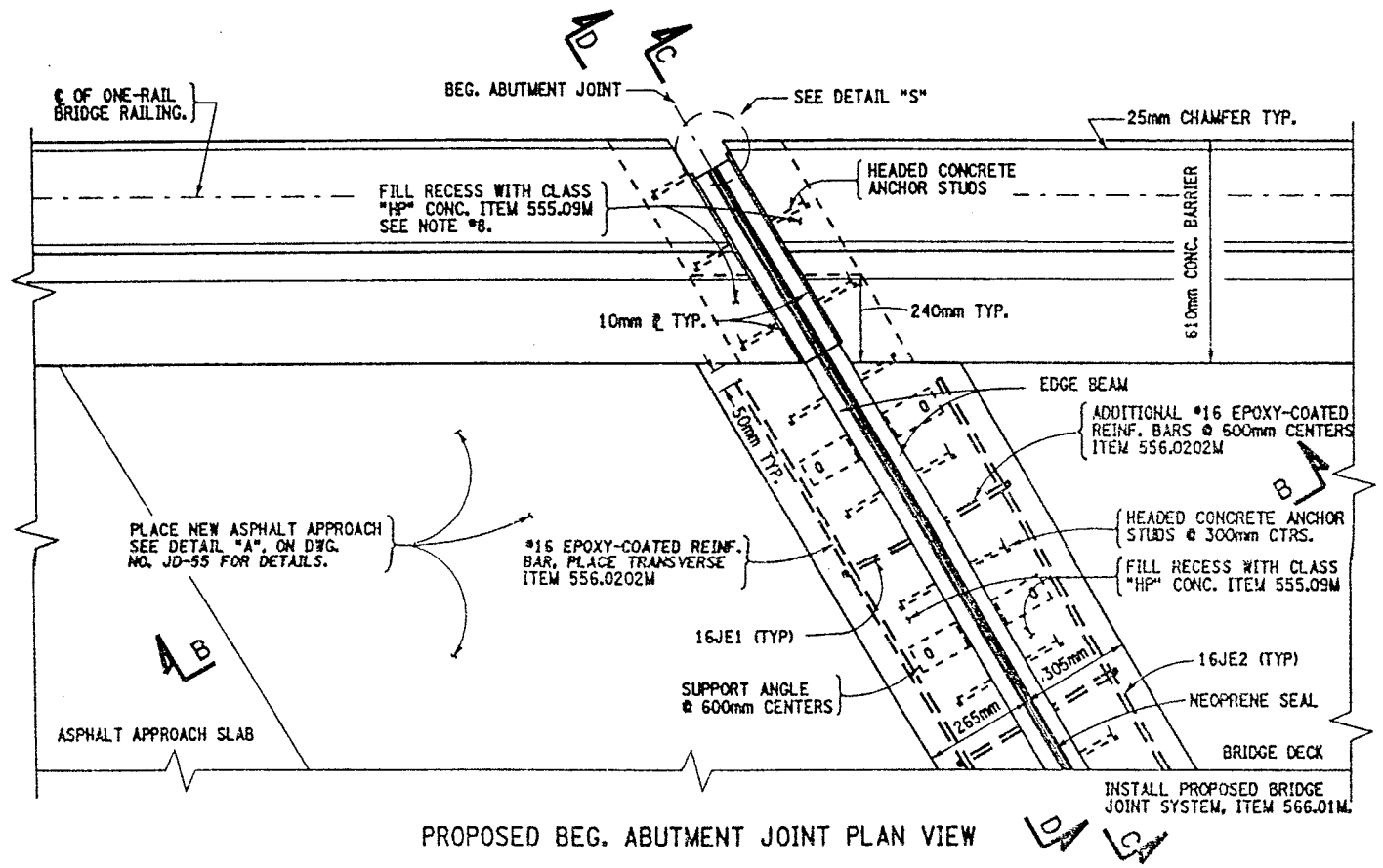

PROPOSED BEG. ABUTMENT JOINT PLAN VIEW

BIN 1093571 - SOUTH ABUT.
BIN 1093572 - SOUTH ABUT.

NOT TO SCALE

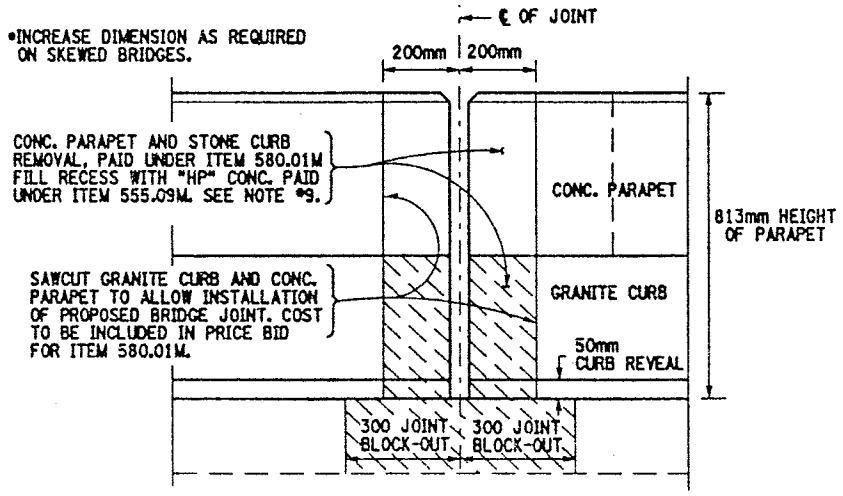

SECTION Y-Y
PARAPET CONCRETE REMOVAL DETAIL

NOT TO SCALE

ITEMS USED:

ITEM 490.30M	-	MISC. COLD MILLING OF BIT. CONC. (SM)
ITEM 08520.5014M	-	SAWCUTTING BIT. CONC. (M)
ITEM 555.09M	-	STRUCT. CONCRETE, CLASS "HP" (CM)
ITEM 556.0202M	-	EPOXY-COATED BAR REINFORCEMENT FOR STRUCT. (Kg)
ITEM 566.01M	-	MODULAR EXP. JOINT SYSTEM ONE-CELL (M)
ITEM 580.01M	-	REMOVAL OF STRUCT. CONCRETE (CM)

FED ROAD REG. NO.	STATE	CONTRACT NO.	SHEET NO.	TOTAL SHEETS
1	N.Y.	D259214	417	432

BRIDGE REHABILITATION PROJECT (ELEMENT SPECIFIC)
VARIOUS BRIDGES ON INTERSTATE 481
TOWNS OF DEWITT AND CICERO
ONONDAGA COUNTY
P.I.N. 305613 | B.I.N. 1093571 & 1093572

NOTES:

1. REMOVAL OF ARMORING DECK ANGLE SHALL BE FROM CURB TO CURB.
2. FOR SECTION VIEWS SEE DWG. NO. JD-55 & JD-56.
3. FOR ADDITIONAL INFORMATION REFER TO DWG. NO. JT-3 & JT-4. ALSO SEE ORIGINAL CONTRACT NUMBER FISH 70-7 AND CONTRACT NUMBER D251436 FOR PREVIOUS WORK.
4. THE EXISTING BRIDGE JOINTS BUTT UP TO PARAPET. THE SEAL THRU THE PARAPET IS PLACED SEPARATE.
5. LEFT SIDE OF DECK SHOWN, RIGHT SIDE IDENTICAL.
6. SAW CUTTING OF CONCRETE AND GRANITE CURB SHALL BE INCLUDED IN PRICE BID FOR ITEM 580.01M.
7. REFER TO DWG. NO. JD-24 FOR ONE-CELL MODULAR JOINT SYSTEM DETAILS AND NOTES.
8. FILL RECESS AT PARAPET WITH CLASS "HP" CONCRETE RESTORE TO ORIGINAL DIMENSIONS.
9. REMOVAL DIMENSIONS AT PARAPETS MAY BE INCREASED TO EMCOMPASS ANY DETERIORATED CONCRETE ADJACENT TO THE JOINT BLOCK-OUT AREA, AOBE.
10. FOR SKEW ANGLES SEE NOTE *8, ON DWG. NO. JD-54.

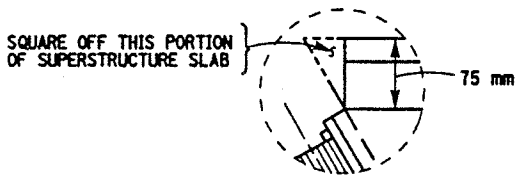

DETAIL "S"

NOT TO SCALE

WORK TO BE DONE:

BIN 1093571 SB

- REMOVE ARMORING DECK ANGLE AND REPLACE BRIDGE JOINT AT BEGINNING ABUTMENT.
- REPAIR CONC. HEADERS AT PIERS 1, 2 & 9.
- CLEAN DRAINAGE SYSTEM AT PIERS 1, 2, 3, 4, 5 & 9.
- REPLACE BRIDGE JOINTS AT PIERS 6, 7, 8, 10, 11, 12, 13 & 14.
- REMOVE ARMORING DECK ANGLE AT END ABUTMENT.

BIN 1093572 NB

- REMOVE ARMORING DECK ANGLE AND REPLACE BRIDGE JOINT AT BEGINNING ABUTMENT.
- REPAIR CONC. HEADERS AT PIERS 1 & 2.
- CLEAN DRAINAGE SYSTEM AT PIERS 1, 2, 3, 4 & 5.
- REPLACE BRIDGE JOINTS AT PIERS 6, 7, 8, 9, 10, 11, 12, 13, & 14.
- REMOVE ARMORING DECK ANGLE AT END ABUTMENT.

ALL DIMENSIONS ARE IN mm UNLESS OTHERWISE NOTED

AS BUILT REVISIONS

SIGNATURE DATE

INTERSTATE 481 SB & NB
OVER
CSX RAILROAD YARD

BRIDGE JOINT DETAILS

STATE OF NEW YORK
DEPARTMENT OF TRANSPORTATION

FILENAME	REGION	DATE	DRAWING NO.
305613AJJA1	3	10/02	JD-53

DESIGN SUPERVISOR — JOB MANAGER — DESIGNED BY — ESTIMATED BY — DRAFTED BY — CHECKED BY

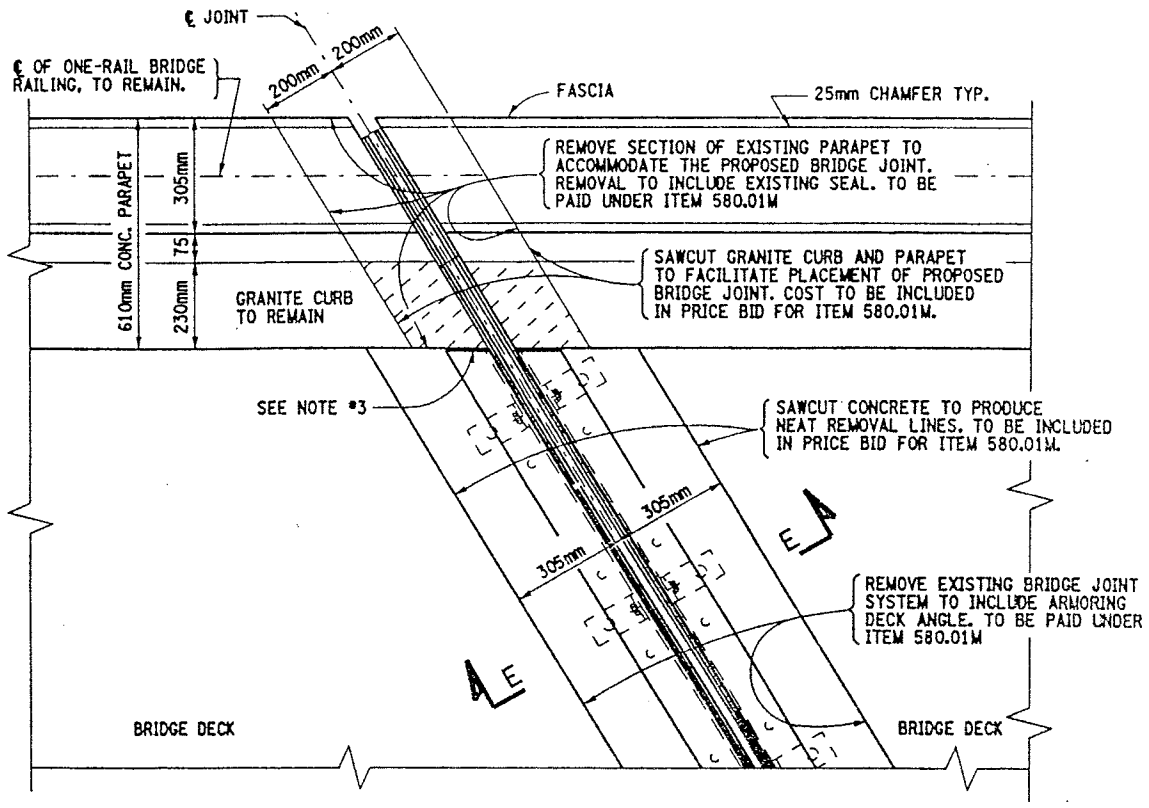

EXISTING PIER JOINT PLAN VIEW

BIN 1093571 - PIERS 6, 7, 8, 10, 11, 12, 13 & 14
BIN 1093572 - PIERS 6, 7, 8, 9, 10, 11, 12, 13 & 14

NOT TO SCALE

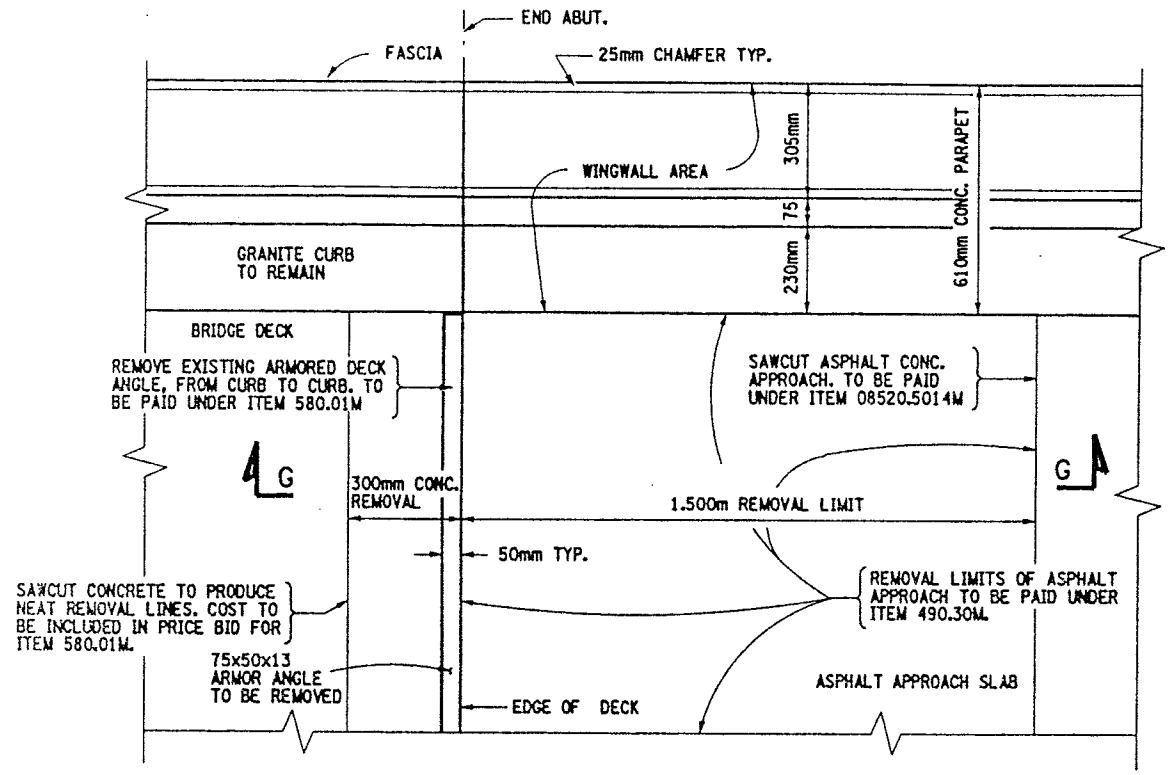

EXISTING END ABUTMENT PLAN VIEW

BIN 1093571 - NORTH ABUTMENT
BIN 1093572 - NORTH ABUTMENT

NOT TO SCALE

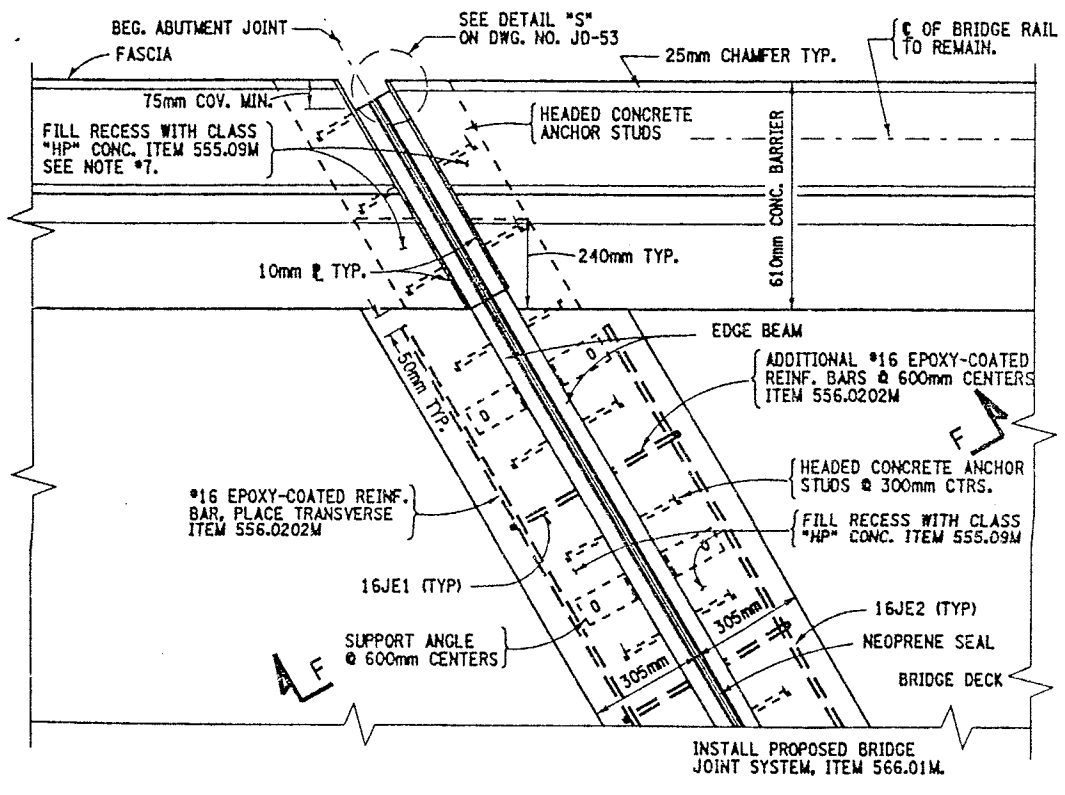

PROPOSED PIER JOINT PLAN VIEW

BIN 1093571 - PIERS 6, 7, 8, 10, 11, 12, 13 & 14
BIN 1093572 - PIERS 6, 7, 8, 9, 10, 11, 12, 13 & 14

NOT TO SCALE

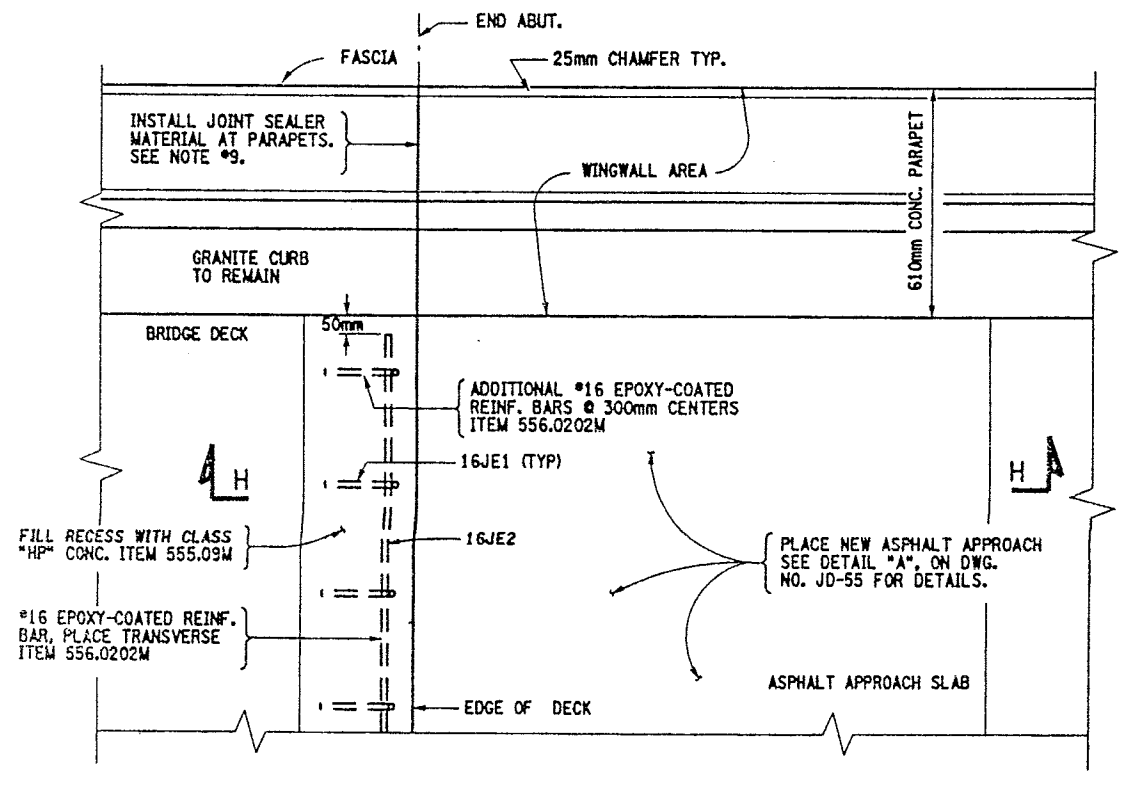

PROPOSED END ABUTMENT PLAN VIEW

BIN 1093571 - NORTH ABUTMENT
BIN 1093572 - NORTH ABUTMENT

NOT TO SCALE

FED ROAD REG. NO.	STATE	CONTRACT NO.	SHEET NO.	TOTAL SHEETS
1	N.Y.	D259214	418	432
BRIDGE REHABILITATION PROJECT (ELEMENT SPECIFIC)				
VARIOUS BRIDGES ON INTERSTATE 481				
TOWNS OF DEWITT AND CICERO				
ONONDAGA COUNTY				
P.I.N. 305613		B.I.N. 1093571 & 1093572		

NOTES:

1. FOR SECTION VIEWS SEE DWG. NO. JD-55 & JD-56.
2. FOR ADDITIONAL INFORMATION REFER TO DWG. NO. JT-3 & JT-4. ALSO SEE ORIGINAL CONTRACT NUMBER FISH 70-7 AND CONTRACT NUMBER D251436 FOR PREVIOUS WORK.
3. THE EXISTING JOINTS AND ARMORING DECK ANGLES BUTT UP TO PARAPET. THE SEAL THRU THE PARAPET IS PLACED SEPARATE.
4. LEFT SIDE OF DECK SHOWN, RIGHT SIDE IDENTICAL.
5. SAW CUTTING OF CONCRETE AND GRANITE CURB SHALL BE INCLUDED IN PRICE BID FOR ITEM 580.01M.
6. REFER TO DWG. NO. JD-24 FOR SINGLE CELL MODULAR JOINT DETAILS AND NOTES.
7. FILL RECESS AT PARAPET WITH CLASS "HP" CONCRETE RESTORE TO ORIGINAL DIMENSIONS.
8. BOTH STRUCTURES HAVE THE FOLLOWING SKEW ANGLES:

   BEGINNING ABUTMENT THROUGH PIER *9 HAVE A SKEW ANGLE OF 8°-43'-42". PIER *10 THROUGH END ABUTMENT HAVE A SKEW ANGLE OF 0°-0'-0".
9. THE INSTALLATION OF NEW JOINT SEALER MATERIAL AT END ABUTMENT PARAPETS SHALL MEET STANDARD SPECIF. 705-06. THE AREA SHALL BE CLEANED PRIOR TO PLACEMENT, TO THE SATISFACTION OF THE ENGINEER. COSTS TO BE INCLUDED IN PRICE BID FOR ITEM 555.09M.

ITEMS USED:

ITEM 490.30M	- MISC. COLD MILLING OF BIT. CONC. (SM)
ITEM 08520.5014M	- SAWCUTTING BIT. CONC. (M)
ITEM 555.09M	- STRUCT. CONCRETE, CLASS "HP" (CM)
ITEM 556.0202M	- EPOXY-COATED BAR REINFORCEMENT FOR STRUCT. (Kg)
ITEM 566.01M	- MODULAR EXP. JOINT SYSTEM ONE-CELL (M)
ITEM 580.01M	- REMOVAL OF STRUCT. CONCRETE (CM)

ALL DIMENSIONS ARE IN mm UNLESS OTHERWISE NOTED

AS BUILT REVISIONS

SIGNATURE DATE

INTERSTATE 481 NB & SB
OVER
CSX RAILROAD YARD

BRIDGE JOINT DETAILS

STATE OF NEW YORK
DEPARTMENT OF TRANSPORTATION

FILENAME	REGION	DATE	DRAWING NO.
305613AJJA1	3	10/02	JD-54

DESIGN SUPERVISOR — JOB MANAGER — ESTIMATED BY — DESIGNED BY — DRAFTED BY — CHECKED BY

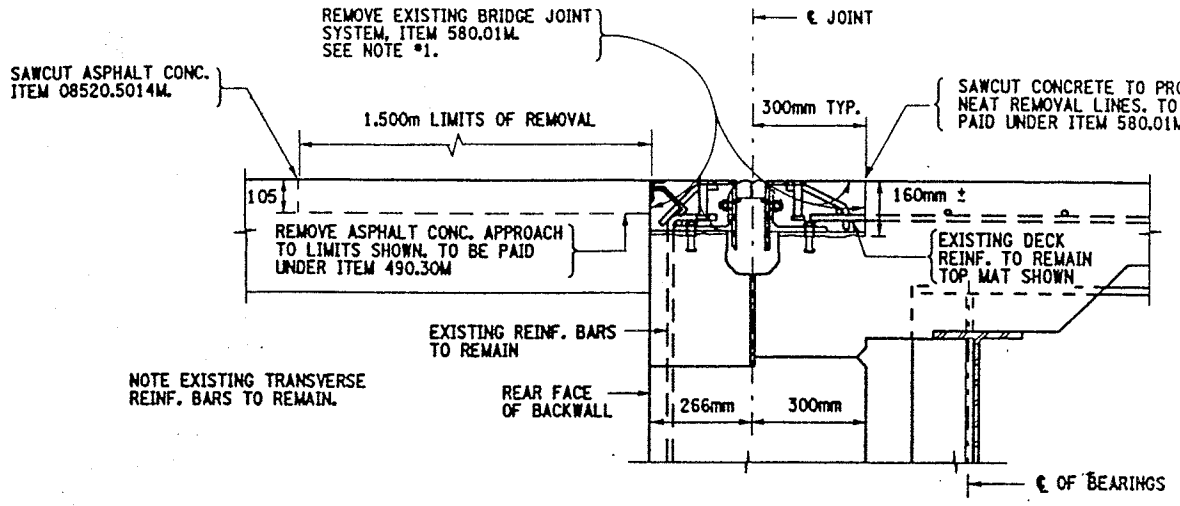

SECTION A-A
EXISTING BEGINNING ABUTMENT JOINT
BIN 1093571 - SOUTH ABUT.
BIN 1093572 - SOUTH ABUT.
NOT TO SCALE

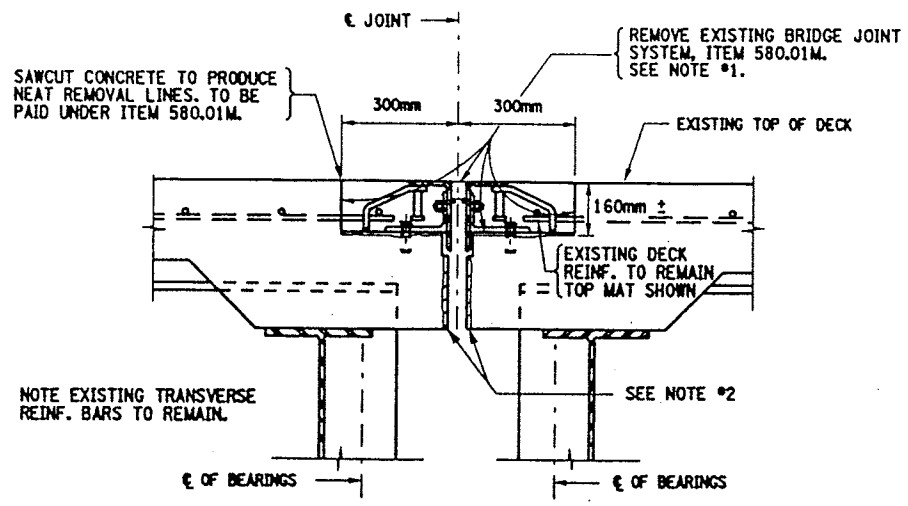

SECTION E-E
EXISTING PIER JOINT TYPICAL
BIN 1093571 - PIERS 6, 7, 8, 10, 11, 12, 13 & 14
BIN 1093572 - PIERS 6, 7, 8, 9, 10, 11, 12, 13 & 14
NOT TO SCALE

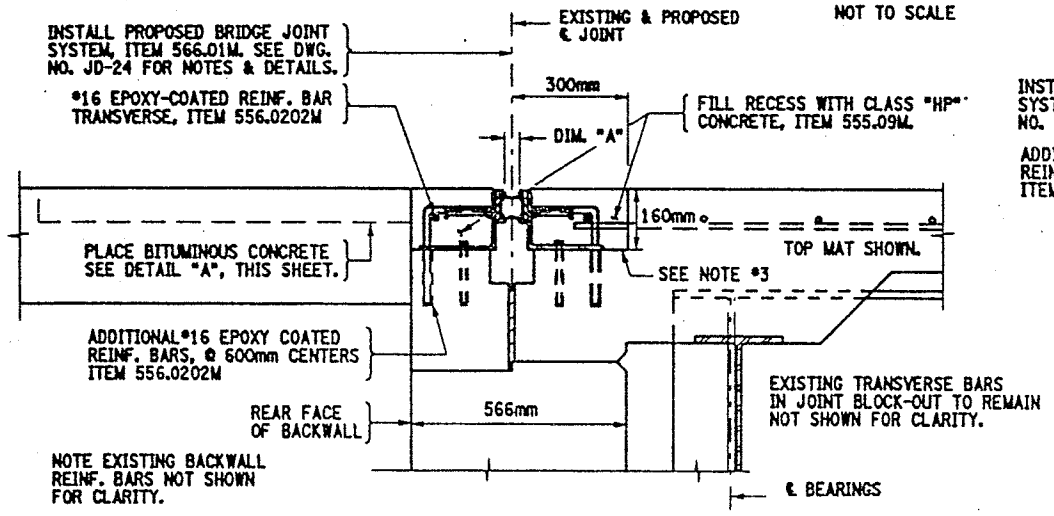

SECTION B-B
PROPOSED BEGINNING ABUTMENT JOINT
BIN 1093571 - SOUTH ABUT.
BIN 1093572 - SOUTH ABUT.
NOT TO SCALE

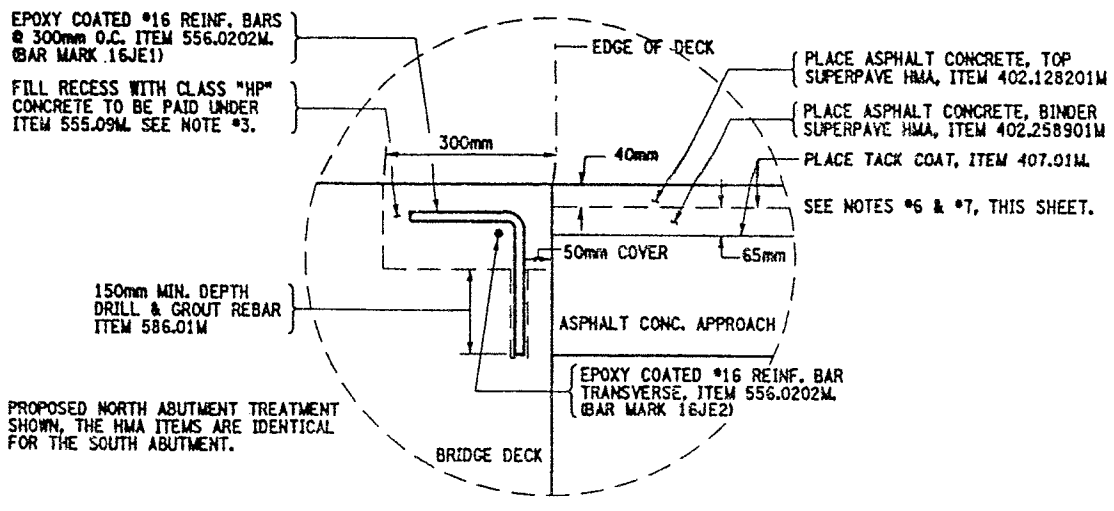

DETAIL "A"
NOT TO SCALE

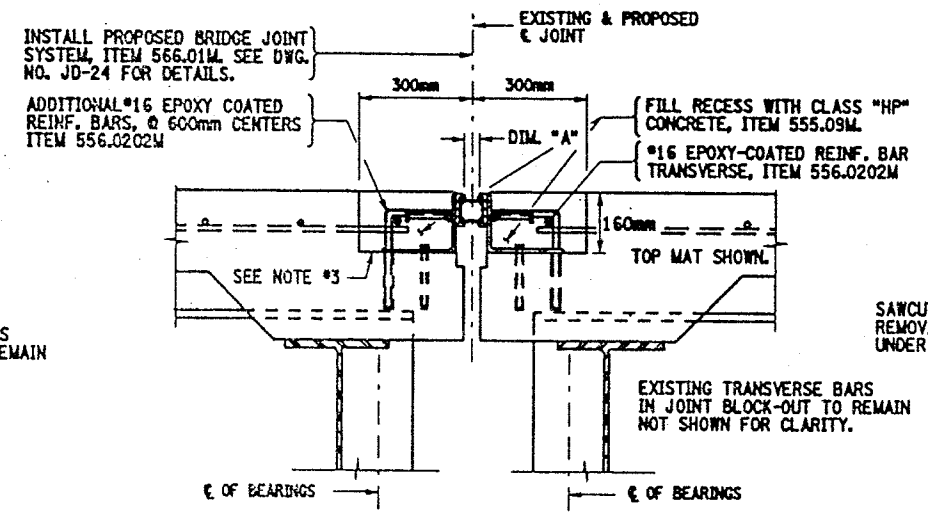

SECTION F-F
PROPOSED PIER JOINT TYPICAL
BIN 1093571 - PIERS 6, 7, 8, 10, 11, 12, 13 & 14
BIN 1093572 - PIERS 6, 7, 8, 9, 10, 11, 12, 13 & 14
NOT TO SCALE

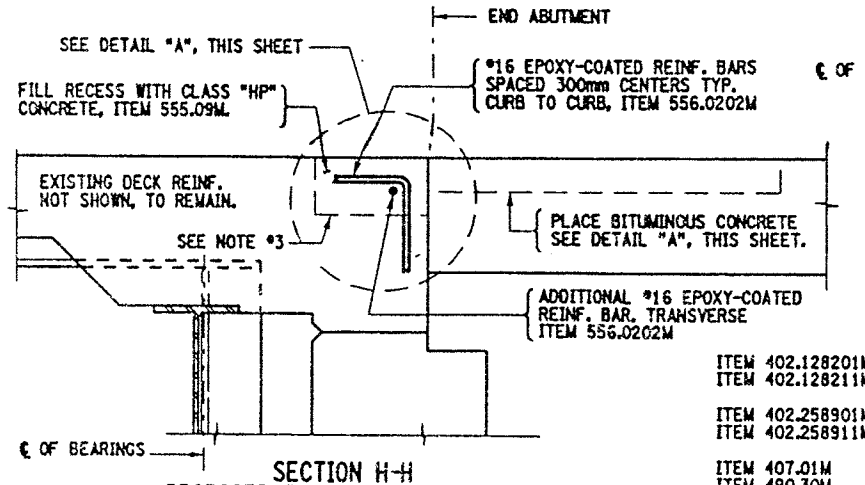

SECTION H-H
PROPOSED END ABUTMENT JOINT
BIN 1093571 - NORTH ABUTMENT
BIN 1093572 - NORTH ABUTMENT
NOT TO SCALE

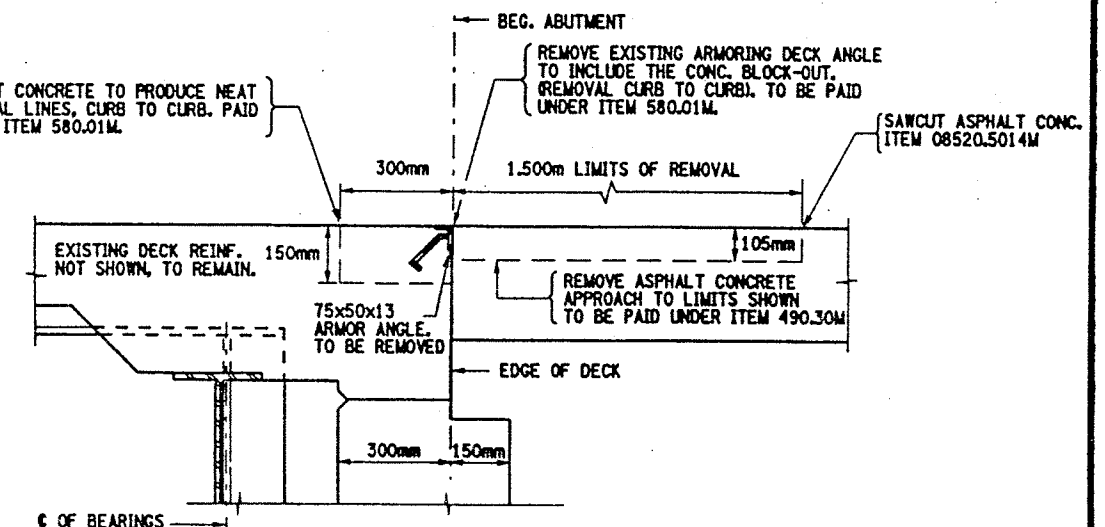

SECTION G-G
EXISTING BEG. ABUTMENT JOINT
BIN 1093571 - NORTH ABUTMENT
BIN 1093572 - NORTH ABUTMENT
NOT TO SCALE

NOTES:

1. REMOVAL OF THE EXISTING BRIDGE JOINT SYSTEM TO LIMITS SHOWN OR AS DIRECTED BY ENGINEER. REMOVAL SHALL INCLUDE ANY ARMORING DECK ANGLE AND ANY ADDITIONAL REBAR WHICH IS WELDED TO THE SEGMENT ANGLE AND THE ORIGINAL REINFORCEMENT. COST TO BE INCLUDED IN PRICE BID FOR ITEM 580.01M.
2. REMOVAL OF A PORTION OF THE BRIDGE DECK MAY BE NECESSARY TO ALLOW FOR EXPANSION OF BRIDGE, AOBE. SEE SECTION VIEW ON DWG. NO. JD-24. COST TO BE INCLUDED IN PRICE BID FOR ITEM 580.01M.
3. RECESSES RECEIVING ITEM 555.09M, AFTER SURFACE PREPARATION, THOROUGHLY WET THE CONCRETE SURFACES AND ALL POROUS SURFACES TO BE IN CONTACT WITH NEW CONCRETE FOR 12 HOURS. NOTE, THE USE OF MATERIAL SPECIF. 705-22 PORTLAND CEMENT MORTAR BONDING GROUT HAS BEEN ELIMINATED, (PROJECT PROPOSAL).
4. ACTUAL BRIDGE JOINT BLOCK-OUT DIMENSIONS MAY VARY. REMOVAL LIMITS SHALL BE TO EXISTING BLOCK-OUT LOCATIONS, OR AS DIRECTED BY THE ENGINEER.
5. PROPOSED PARTIAL PLAN VIEWS, SEE DWG. NO. JD-53 & JD-54.
6. ALL SURFACES OF HMA SHALL BE CLEANED AND TACK-COATED PRIOR TO HMA PLACEMENT. ALL COSTS SHALL BE INCLUDED IN THE UNIT PRICE BID FOR ITEM 407.01M.
7. ANY USE OF SUPERPAVE HMA ITEMS SHALL INCLUDE THE APPROPRIATE PLANT PRODUCTION QUALITY ADJUSTMENT ITEMS.

ITEMS USED:

ITEM 402.128201M - SUPERPAVE HMA F2, 12.5mm (MT)
ITEM 402.128211M - PLANT PRODUCTION QUALITY ADJUSTMENT TO 402.128201M (QU)
ITEM 402.258901M - SUPERPAVE HMA F9, 25.0mm (MT)
ITEM 402.258911M - PLANT PRODUCTION QUALITY ADJUSTMENT TO 402.258901M (QU)
ITEM 407.01M - TACK COAT (L)
ITEM 490.30M - MISC. COLD MILL OF BITUMINOUS CONC. (SM)
ITEM 08520.5014M - SAWCUTTING BIT. CONC. (M)
ITEM 555.09M - STRUCT. CONCRETE, CLASS "HP" (CM)
ITEM 556.0202M - EPOXY-COATED BAR REINF. FOR STRUCT. (KG)
ITEM 566.01M - MOD. EXP. JOINT SYSTEM ONE-CELL (M)
ITEM 580.01M - REMOVAL OF STRUCT. CONCRETE (CM)
ITEM 586.01M - DRILL & GROUT REINF. BARS (MM)

FED ROAD REG. NO.	STATE	CONTRACT NO.	SHEET NO.	TOTAL SHEETS
1	N.Y.	D259214	419	432

BRIDGE REHABILITATION PROJECT (ELEMENT SPECIFIC)
VARIOUS BRIDGES ON INTERSTATE 481
TOWNS OF DEWITT AND CICERO
ONONDAGA COUNTY
P.I.N. 305613 | B.I.N. 1093571 & 1093572

ALL DIMENSIONS ARE IN mm UNLESS OTHERWISE NOTED

AS BUILT REVISIONS

SIGNATURE | DATE

INTERSTATE 481 NB & SB
OVER
CSX RAILROAD YARD
BRIDGE JOINT DETAILS

STATE OF NEW YORK
DEPARTMENT OF TRANSPORTATION

FILENAME	REGION	DATE	DRAWING NO.
305613AJJA1	3	10/02	JD-55

DESIGN SUPERVISOR — JOB MANAGER — DESIGNED BY — CHECKED BY — DRAFTED BY — ESTIMATED BY — CHECKED BY

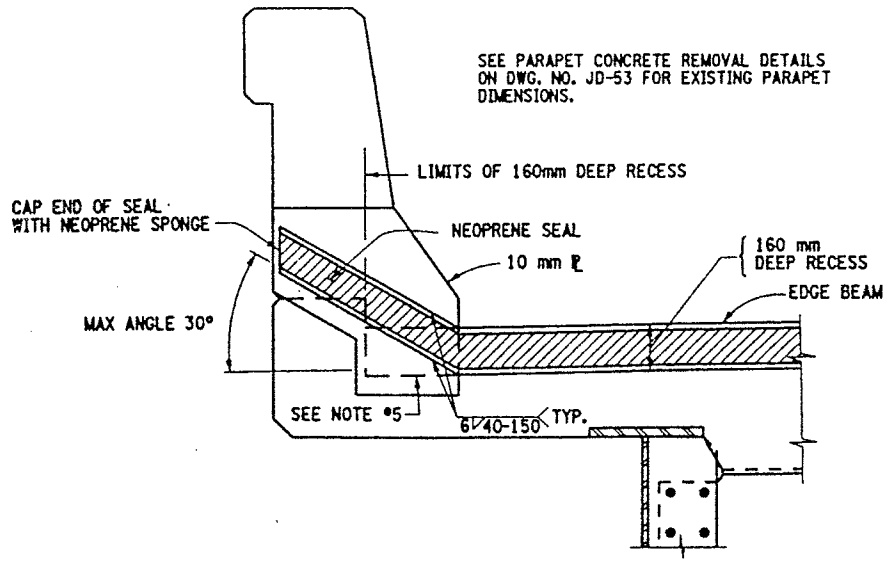

PROPOSED SEAL PLACEMENT TYPICAL
SECTION C-C (CONCRETE TRAFFIC BARRIER)

NOT TO SCALE

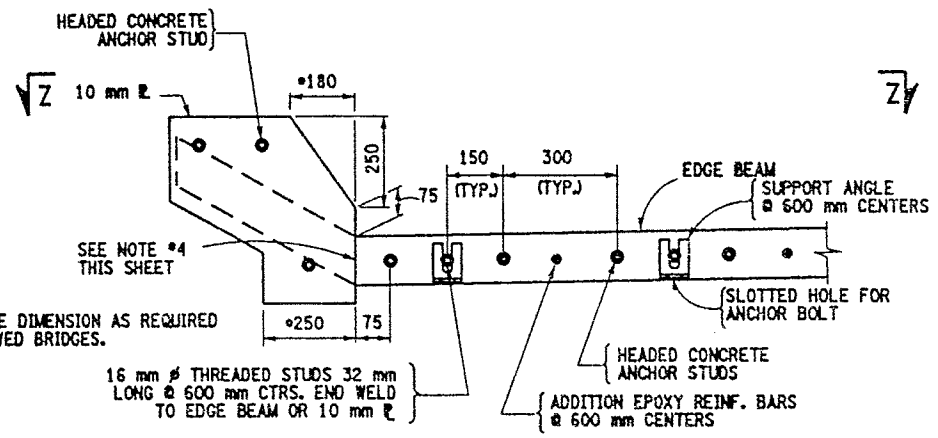

PROPOSED STEEL PLATE TYPICAL
SECTION D-D (CONCRETE TRAFFIC BARRIER)

(ONLY THE STEEL SHOWN)

NOT TO SCALE

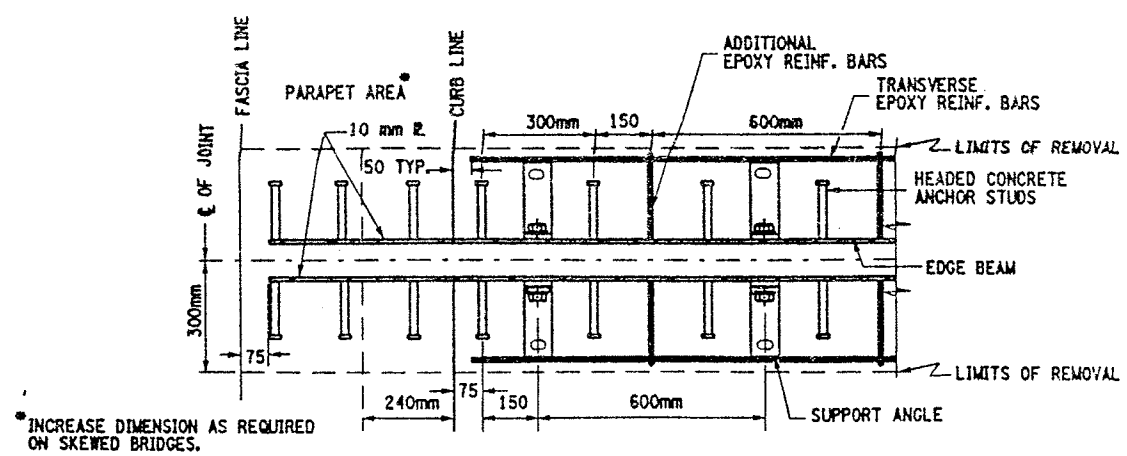

PLAN VIEW OF STEEL ℄ SECTION Z-Z
TYPICAL SPACING FOR SINGLE CELL

NOT TO SCALE

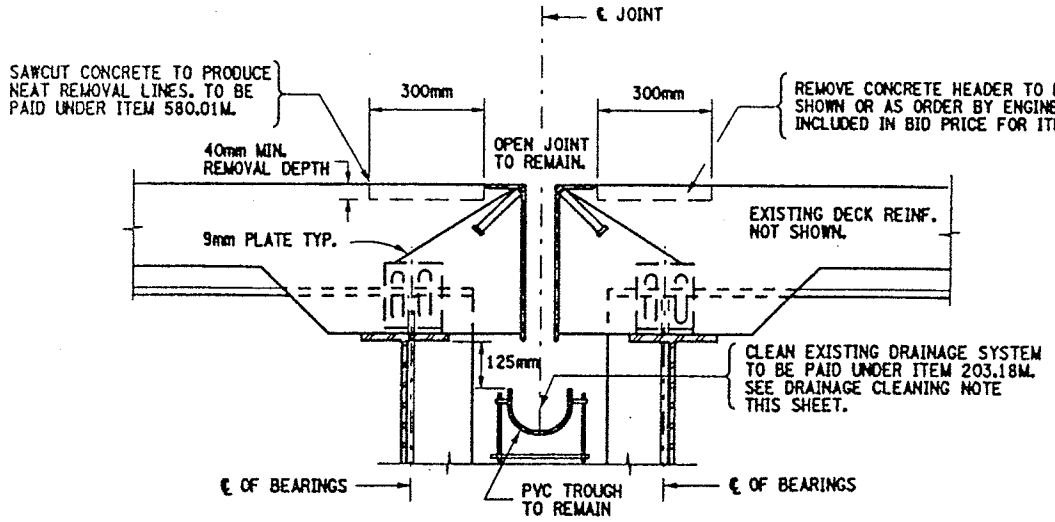

EXISTING OPEN JOINT AT PIERS
(REPAIRS TO OPEN JOINT HEADERS)

BIN 1093571 - PIERS 1, 2, & 9
BIN 1093572 - PIERS 1 & 2

NOT TO SCALE

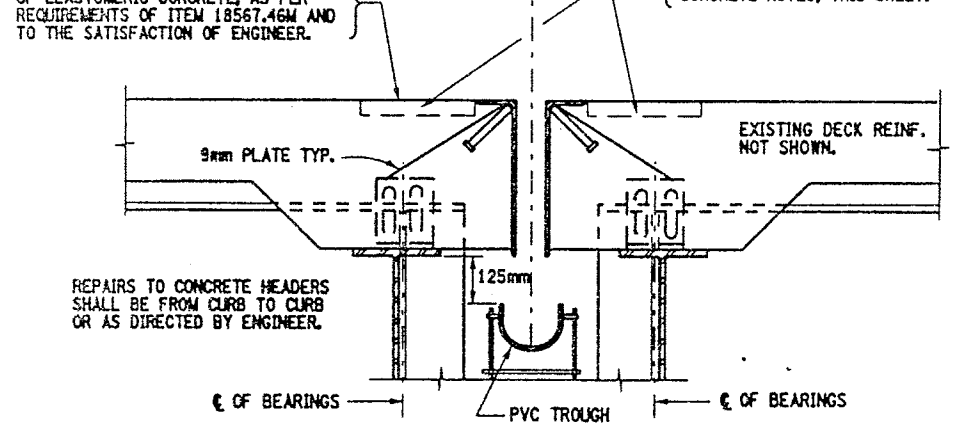

PROPOSED OPEN JOINT AT PIERS
(REPAIRS TO OPEN JOINT HEADERS)

BIN 1093571 - PIERS 1, 2, & 9
BIN 1093572 - PIERS 1 & 2

NOT TO SCALE

ITEMS USED:

ITEM 203.18M - CLEAN CLOSED DRAINAGE SYSTEMS (M)
ITEM 18567.46M - ELASTOMERIC CONCRETE FOR BRIDGE JOINT SYSTEMS (M)
ITEM 580.01M - REMOVAL OF STRUCT. CONCRETE (CM)

FED ROAD REG. NO.	STATE	CONTRACT NO.	SHEET NO.	TOTAL SHEETS
1	N.Y.	D259214	420	432

BRIDGE REHABILITATION PROJECT (ELEMENT SPECIFIC)
VARIOUS BRIDGES ON INTERSTATE 481
TOWNS OF DEWITT AND CICERO
ONONDAGA COUNTY
P.I.N. 305613 | B.I.N. 1093571 & 1093572

NOTES:

1. ALL NOTES & DETAILS ON DWG. NO. JD-24 SHALL APPLY.
2. REFER TO DWG. NO. JD-53 & JD-54 FOR PROPOSED PARTIAL PLAN VIEWS.
3. FOR CALCULATION OF "J" DIMENSION REFER TO DWG. NO. JD-24.
4. ALL WELDS SHALL BE GROUND SMOOTH TO THE SATISFACTION OF THE ENGINEER, ON SEAL CONTACT SIDE OF EDGE BEAM.
5. RECESSES RECEIVING ITEM 555.09M, AFTER SURFACE PREPARATION, THOROUGHLY WET THE CONCRETE SURFACES AND ALL POROUS SURFACES TO BE IN CONTACT WITH NEW CONCRETE FOR 12 HOURS. NOTE, THE USE OF MATERIAL SPECIF. 705-22 PORTLAND CEMENT MORTAR BONDING GROUT HAS BEEN ELIMINATED, (PROJECT PROPOSAL).

CLEAN DRAINAGE SYSTEM NOTE:

THE FOLLOWING CLOSED DRAINAGE SYSTEMS SHALL BE CLEANED UNDER THIS CONTRACT.

BIN 1093571 - PIERS 1, 2, 3, 4, 5, & 9
BIN 1093572 - PIERS 1, 2, 3, 4, 5 & 6

NOTE, AT PIER #6 THE TYPE OF BRIDGE JOINT IS AN ARMORED JOINT WITH COMPRESSION SEAL. THE DOWNSPOUTS ARE CONNECTED TO THE BRIDGE SCUPPERS.

THE CLEANING OF THE EXISTING DRAINAGE SYSTEM (ITEM 203.18M) SHALL BE FROM HOPPER (FASCIA GIRDER) TO HOPPER (FASCIA GIRDER) AND SHALL INCLUDE THE PVC TROUGH AND THE ENTIRE DOWNSPOUT SYSTEM (DIA. OF DOWNSPOUTS VARY) FROM HOPPERS TO OUTLET. REFER TO DWG. NO. DD17-1 THRU DWG. NO. DD17-4 FOR DRAINAGE DETAILS AND PROPOSED MODIFICATIONS TO PIER DOWNSPOUTS.

FOR ESTIMATING THE QUANTITY FOR ITEM 203.18M. THE FOLLOWING INFORMATION IS ASSUMED:

BIN 1093571 - PIERS 1, 2, 3, 4, 5, & 9
(256 METERS TOTAL)

BIN 1093572 - PIERS 1, 2, 3, 4.5 & 6
(269 METERS TOTAL)

CONTRACTOR SHALL TAKE CARE WHEN PERFORMING CLEANING OPERATION NOT TO DAMAGE THE EXISTING DRAINAGE SYSTEM. ANY DAMAGE CAUSED BY CONTRACTOR'S OPERATIONS SHALL BE REPAIRED OR REPLACED AS DEEMED NECESSARY BY THE ENGINEER AT NO ADDITIONAL COST TO THE STATE.

ELASTOMERIC CONCRETE NOTE:

1. AN EXPERIENCED TECHNICAL REPRESENTATIVE EMPLOYED BY THE MANUFACTURER OF THE ELASTOMERIC CONCRETE SHALL BE PRESENT DURING ALL PHASES OF SUBSTRATE PREPARATION AND MATERIAL PLACEMENT.
2. THE WATERTIGHT INTEGRITY TEST SHALL NOT BE REQUIRED FOR THE OPEN JOINT HEADER REPAIRS, WHERE ELASTOMERIC CONCRETE (ITEM 18567.46M) IS USED, FOR THESE TWO STRUCTURES ONLY.
3. THE REMOVAL DIMENSIONS MAY BE ADJUSTED TO ENSURE THAT ALL DETERIORATED CONCRETE ADJACENT TO THE JOINT AREA IS ENCOMPASS, AOBE.

ALL DIMENSIONS ARE IN mm UNLESS OTHERWISE NOTED

AS BUILT REVISIONS

SIGNATURE _____ DATE _____

INTERSTATE 481 NB & SB
OVER
CSX RAILROAD YARD

BRIDGE JOINT DETAILS

STATE OF NEW YORK
DEPARTMENT OF TRANSPORTATION

FILENAME	REGION	DATE	DRAWING NO.
305613AJJA1	3	10/02	JD-56

DESIGN SUPERVISOR ____ JOB MANAGER ____ DESIGNED BY ____ CHECKED BY ____ DRAFTED BY ____ ESTIMATED BY ____

BIN:1093571
I481 SB / CSX RR
Span 1 of 15

TOP OF DECK DETERIORATION SKETCH

NOT TO SCALE

DATE: 03/27/2014

N

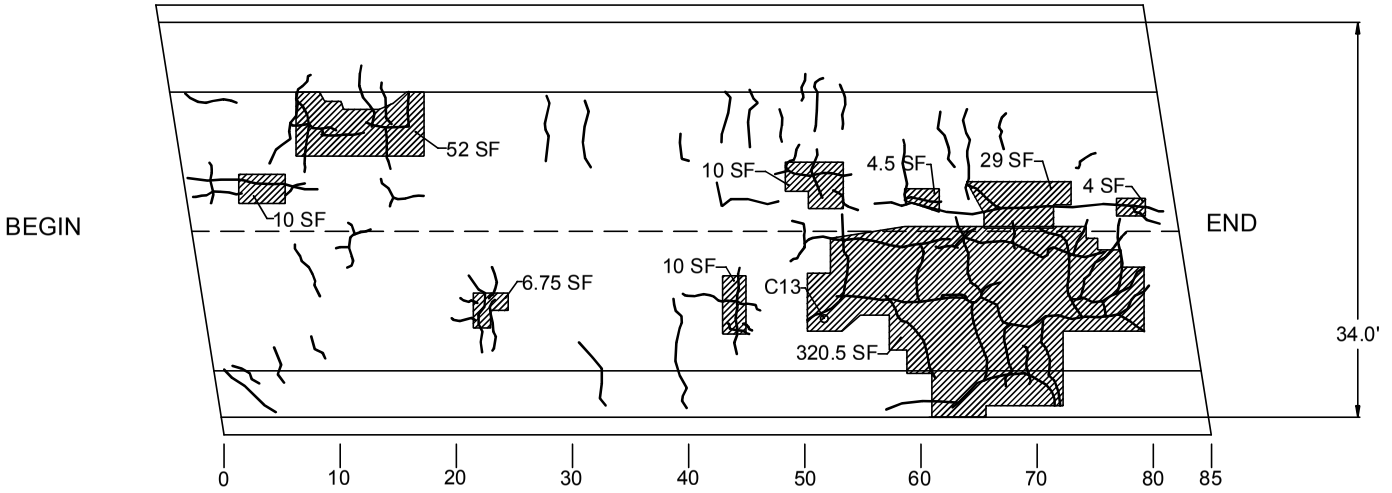

TOTAL DAMAGED AREA EQUALS 446.75 SF WHICH IS 15.5% OF DECK SURFACE

LEGEND

- Crack
- Core Location
- Hollow Concrete

BIN:1093571
I481 SB / CSX RR
Span 2 of 15

TOP OF DECK DETERIORATION SKETCH

NOT TO SCALE

DATE: 03/27/2014

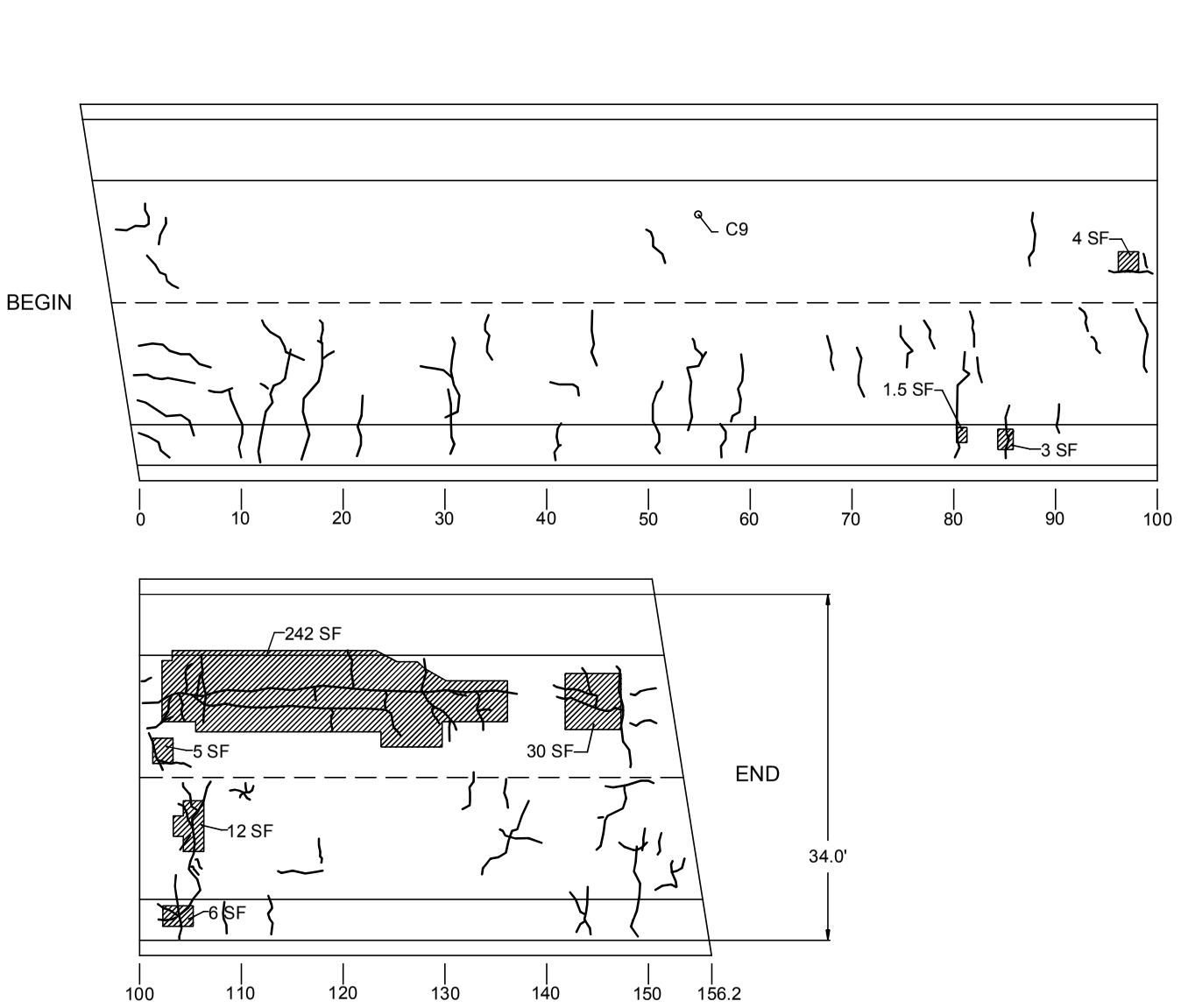

TOTAL DAMAGED AREA EQUALS 303.5 SF WHICH IS 5.7% OF DECK SURFACE

LEGEND

- Crack
- Core Location
- Hollow Concrete

BIN:1093571
I481 SB / CSX RR
Span 3 of 15

TOP OF DECK DETERIORATION SKETCH

NOT TO SCALE

DATE: 03/27/2014

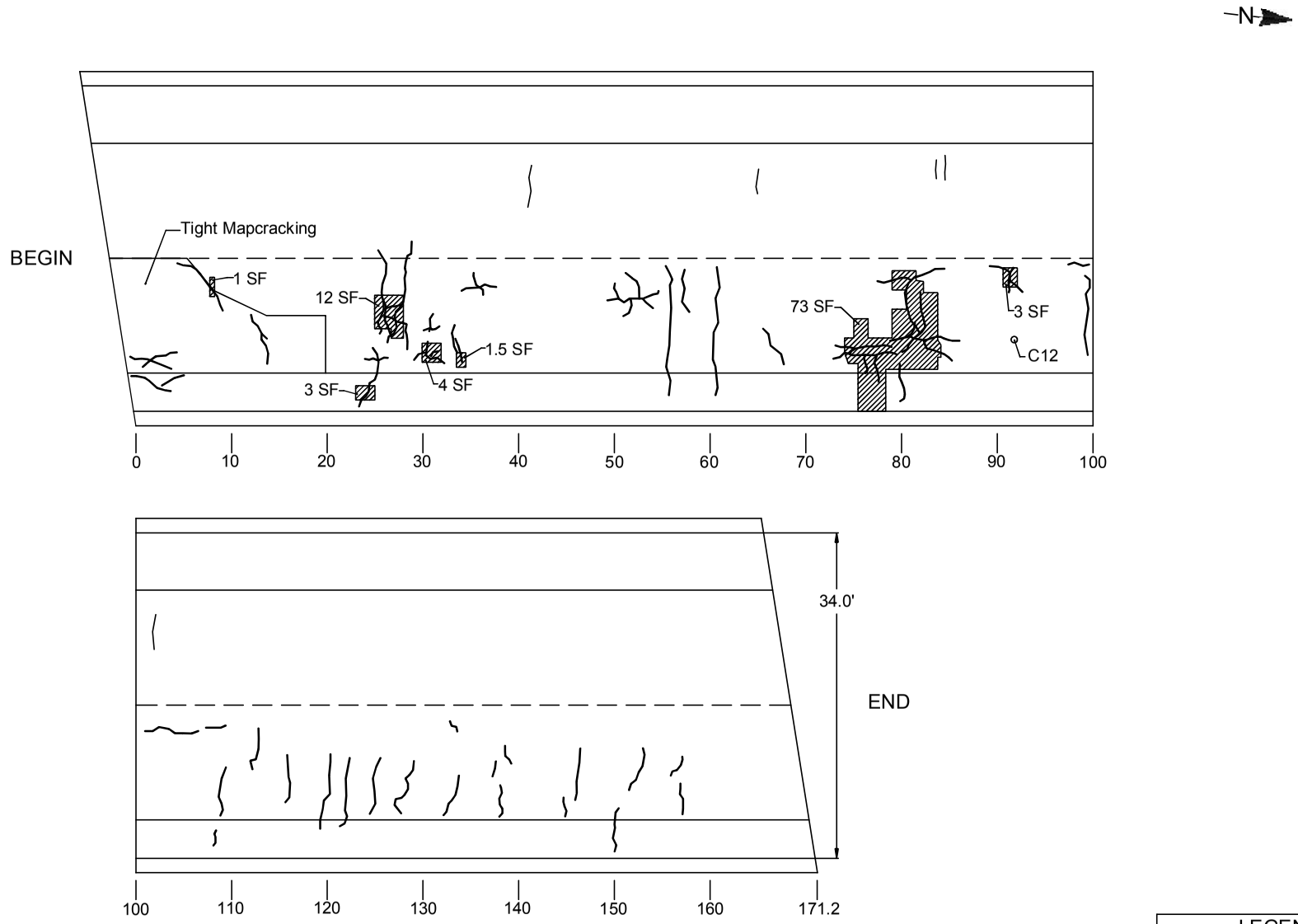

TOTAL DAMAGED AREA EQUALS 97.5 SF WHICH IS 1.7% OF DECK SURFACE
SCATTERED HL CRACKING THROUGHOUT DECK

LEGEND

- Crack
- Core Location
- Hollow Concrete

BIN:1093571
I481 SB / CSX RR
Span 4 of 15

TOP OF DECK DETERIORATION SKETCH

NOT TO SCALE

DATE: 03/27/2014

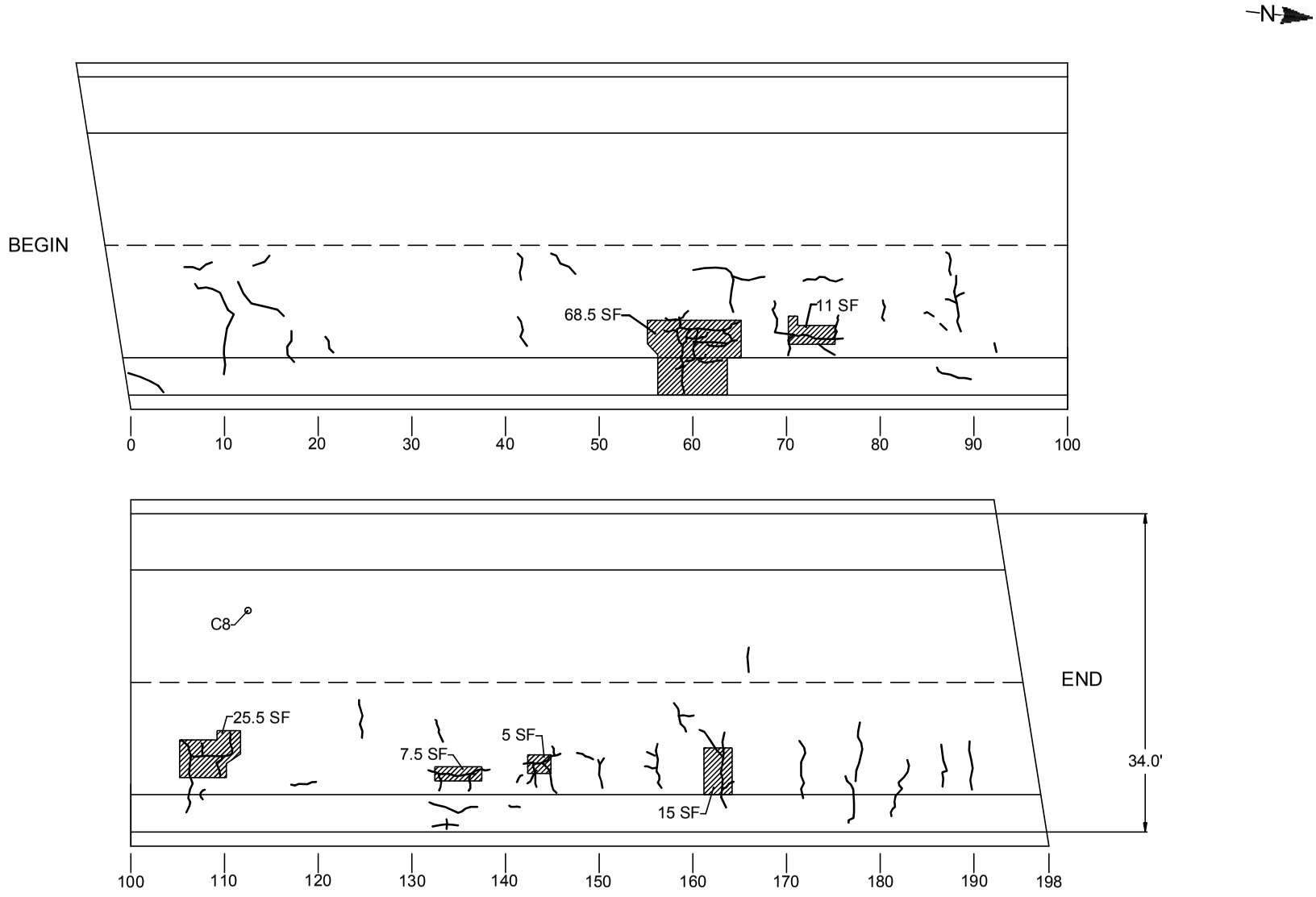

TOTAL DAMAGED AREA EQUALS 132.5 SF WHICH IS 2.0% OF DECK SURFACE

LEGEND

Hollow Concrete Crack Core Location

BIN:1093571
I481 SB / CSX RR
Span 5 of 15

TOP OF DECK DETERIORATION SKETCH

NOT TO SCALE

DATE: 03/27/2014

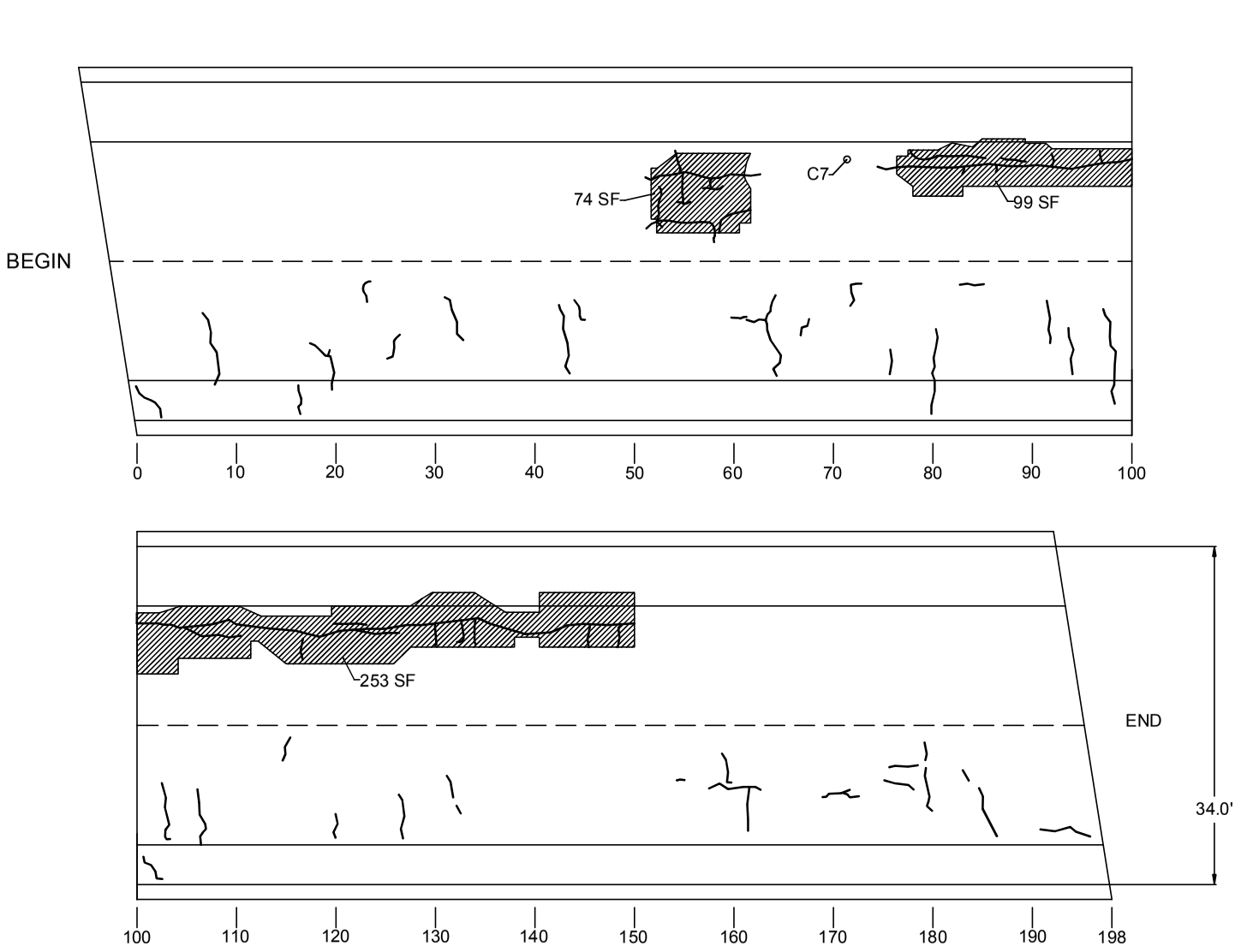

TOTAL DAMAGED AREA EQUALS 426 SF WHICH IS 6.3% OF DECK SURFACE

LEGEND

Hollow Concrete | Crack | Core Location

BIN:1093571
I481 SB / CSX RR
Span 6 of 15

TOP OF DECK DETERIORATION SKETCH

NOT TO SCALE

DATE: 03/27/2014

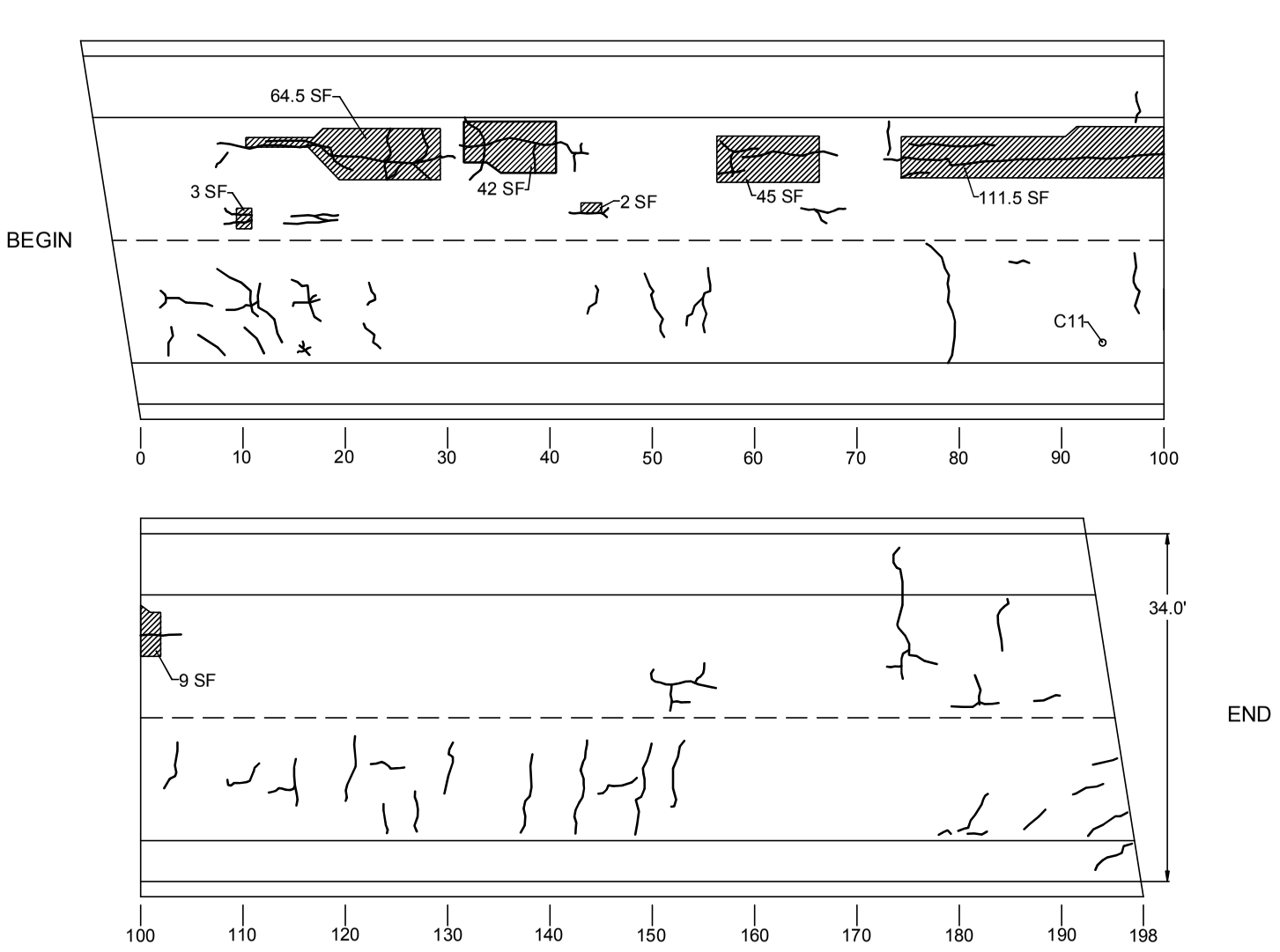

TOTAL DAMAGED AREA EQUALS 277 SF WHICH IS 4.1% OF DECK SURFACE

LEGEND

Hollow Concrete | Crack | Core Location

BIN:1093571
I481 SB / CSX RR
Span 7 of 15

TOP OF DECK DETERIORATION SKETCH

NOT TO SCALE

DATE: 03/27/2014

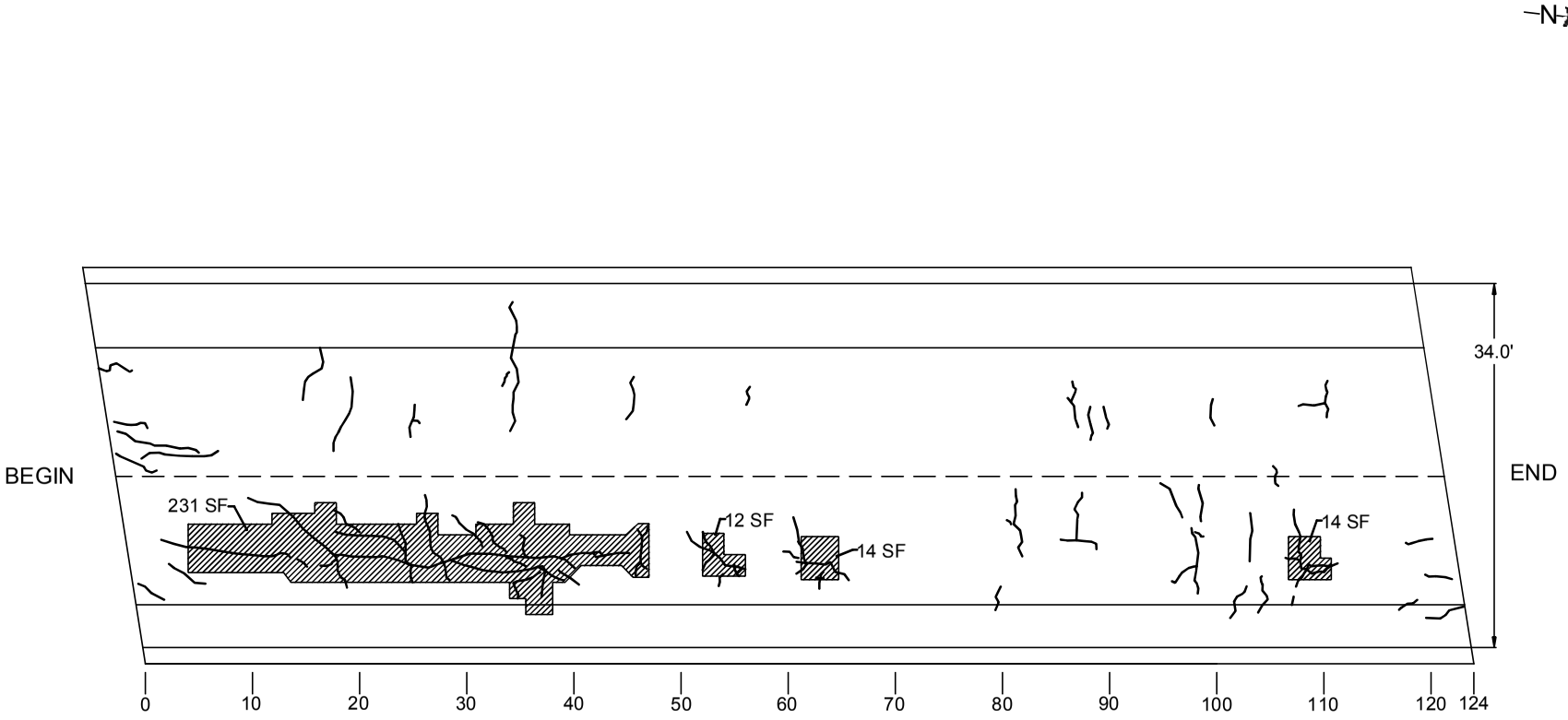

TOTAL DAMAGED AREA EQUALS 271 SF WHICH IS 6.4% OF DECK SURFACE

LEGEND
Crack
Hollow Concrete

BIN:1093571
I481 SB / CSX RR
Span 8 of 15

TOP OF DECK DETERIORATION SKETCH

NOT TO SCALE

DATE: 03/27/2014

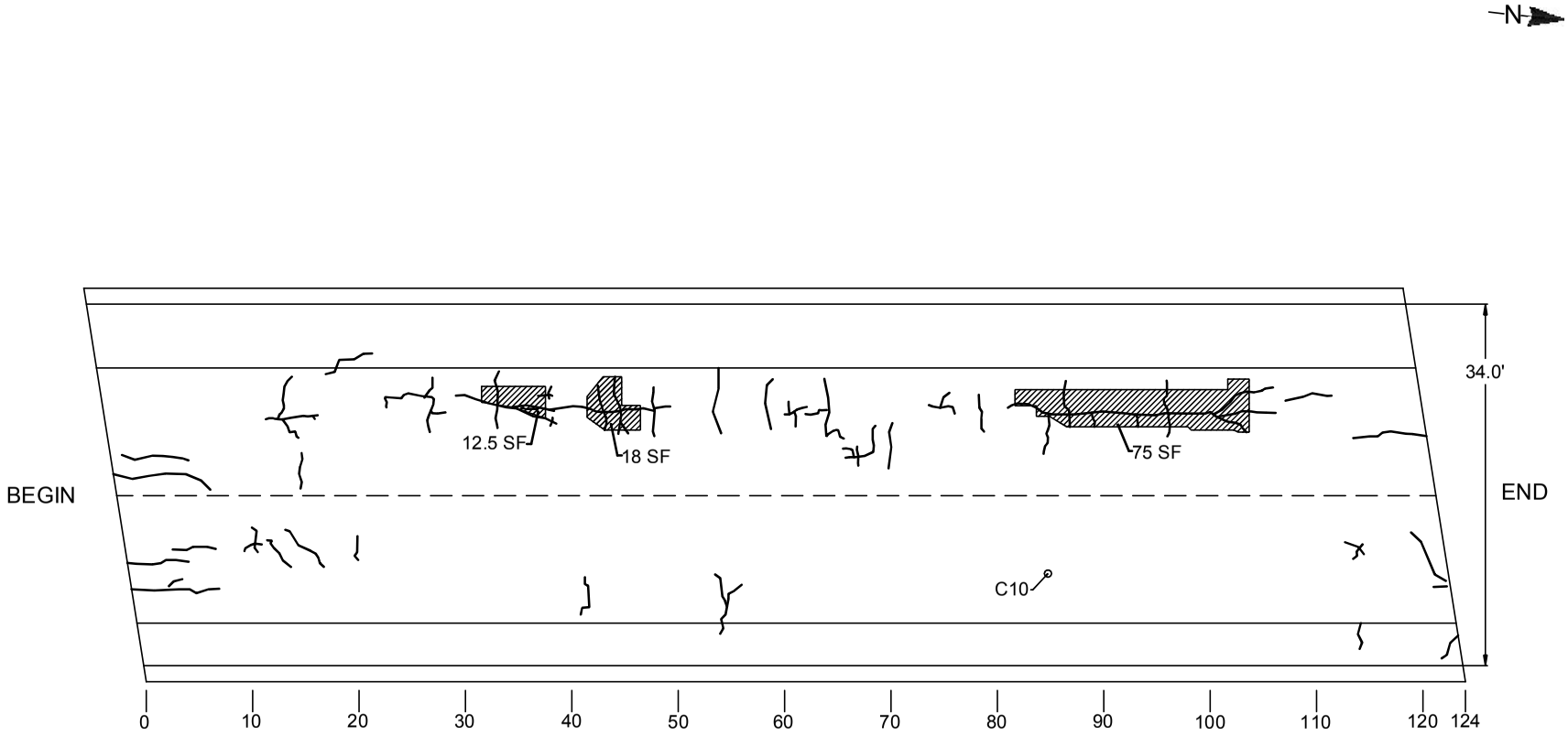

TOTAL DAMAGED AREA EQUALS 105.5 SF WHICH IS 2.5% OF DECK SURFACE

LEGEND
Crack
Core Location
Hollow Concrete

BIN:1093571
I481 SB / CSX RR
Span 9 of 15

TOP OF DECK DETERIORATION SKETCH

NOT TO SCALE

DATE: 03/27/2014

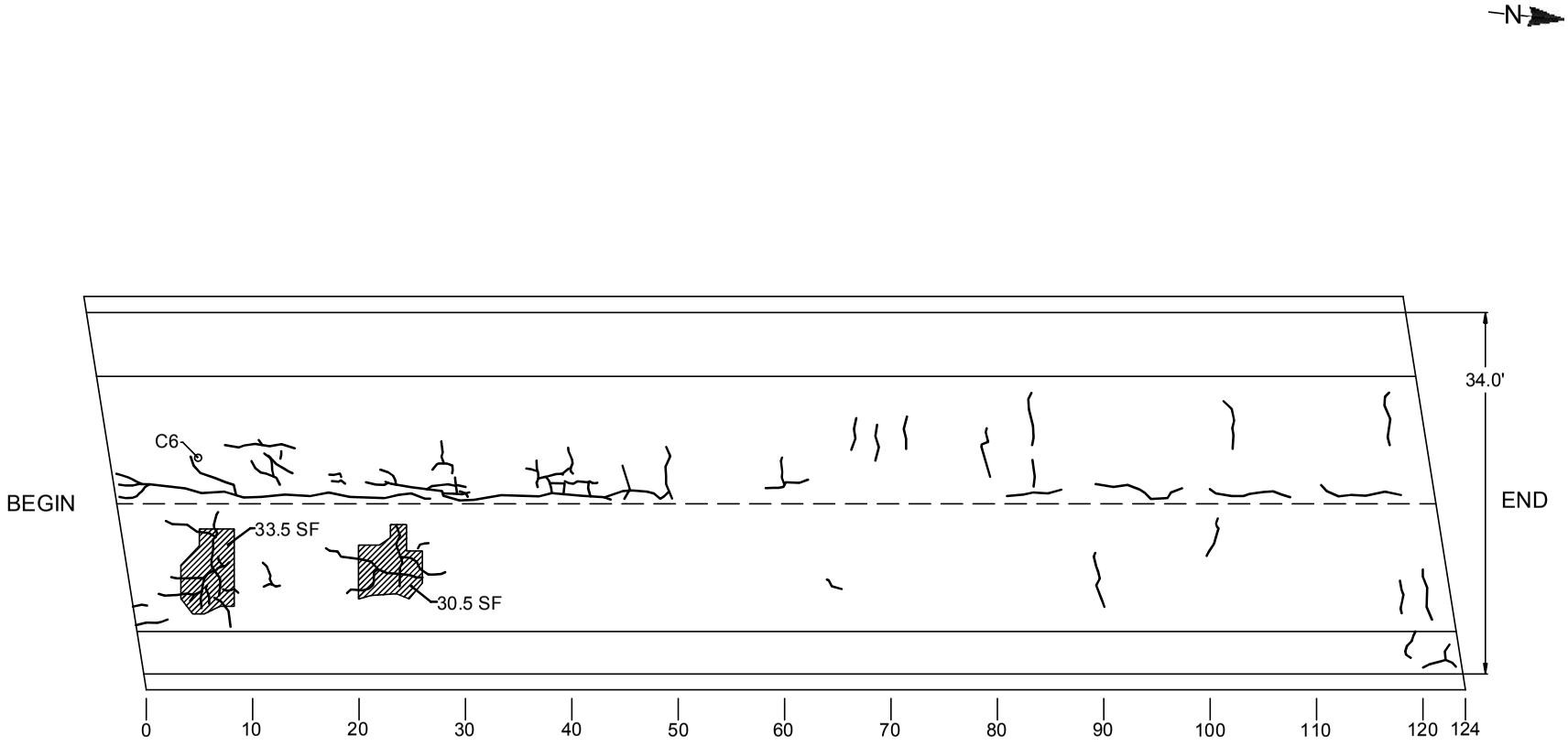

TOTAL DAMAGED AREA EQUALS 64 SF WHICH IS 1.5% OF DECK SURFACE

LEGEND

- Crack
- Core Location
- Hollow Concrete

BIN:1093571
I481 SB / CSX RR
Span 10 of 15

TOP OF DECK DETERIORATION SKETCH

NOT TO SCALE

DATE: 03/27/2014

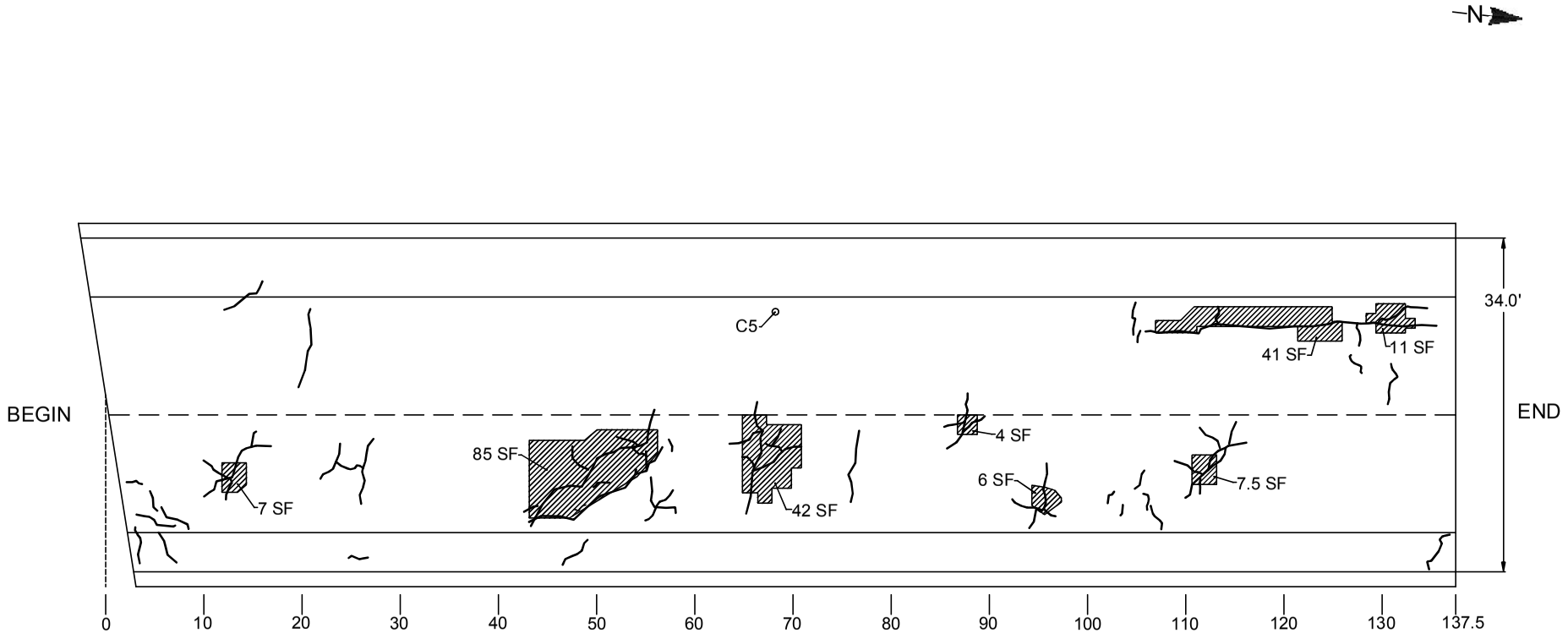

TOTAL DAMAGED AREA EQUALS 203.5 SF WHICH IS 4.8% OF DECK SURFACE

LEGEND

- Crack
- Core Location
- Hollow Concrete

BIN:1093571
I481 SB / CSX RR
Span 11 of 15

TOP OF DECK DETERIORATION SKETCH

NOT TO SCALE

DATE: 03/27/2014

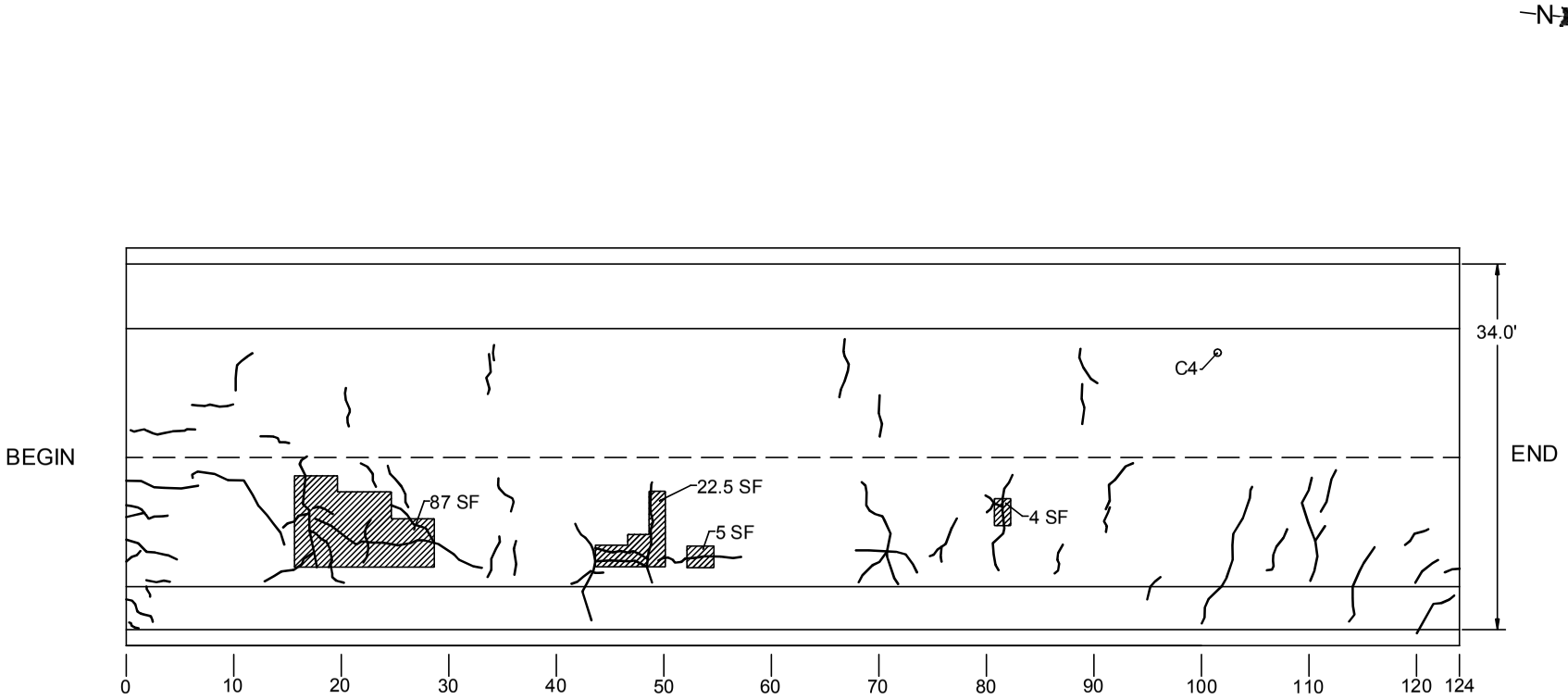

TOTAL DAMAGED AREA EQUALS 118.5 SF WHICH IS 2.8% OF DECK SURFACE

LEGEND

- Crack
- Core Location
- Hollow Concrete

BIN:1093571
I481 SB / CSX RR
Span 12 of 15

TOP OF DECK DETERIORATION SKETCH

NOT TO SCALE

DATE: 03/27/2014

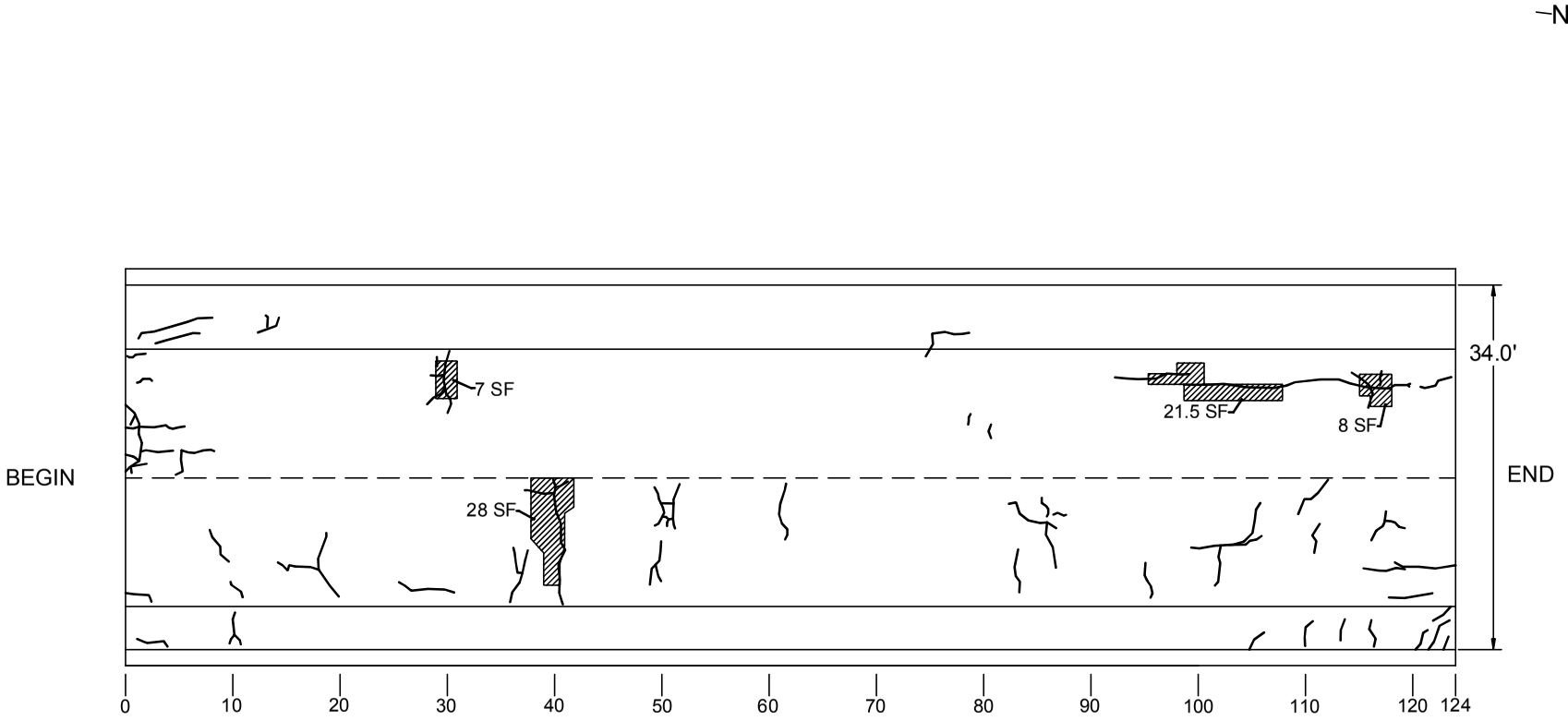

TOTAL DAMAGED AREA EQUALS 64.5 SF WHICH IS 1.5% OF DECK SURFACE

LEGEND

Crack

Hollow Concrete

BIN:1093571
I481 SB / CSX RR
Span 13 of 15

TOP OF DECK DETERIORATION SKETCH

NOT TO SCALE

DATE: 03/27/2014

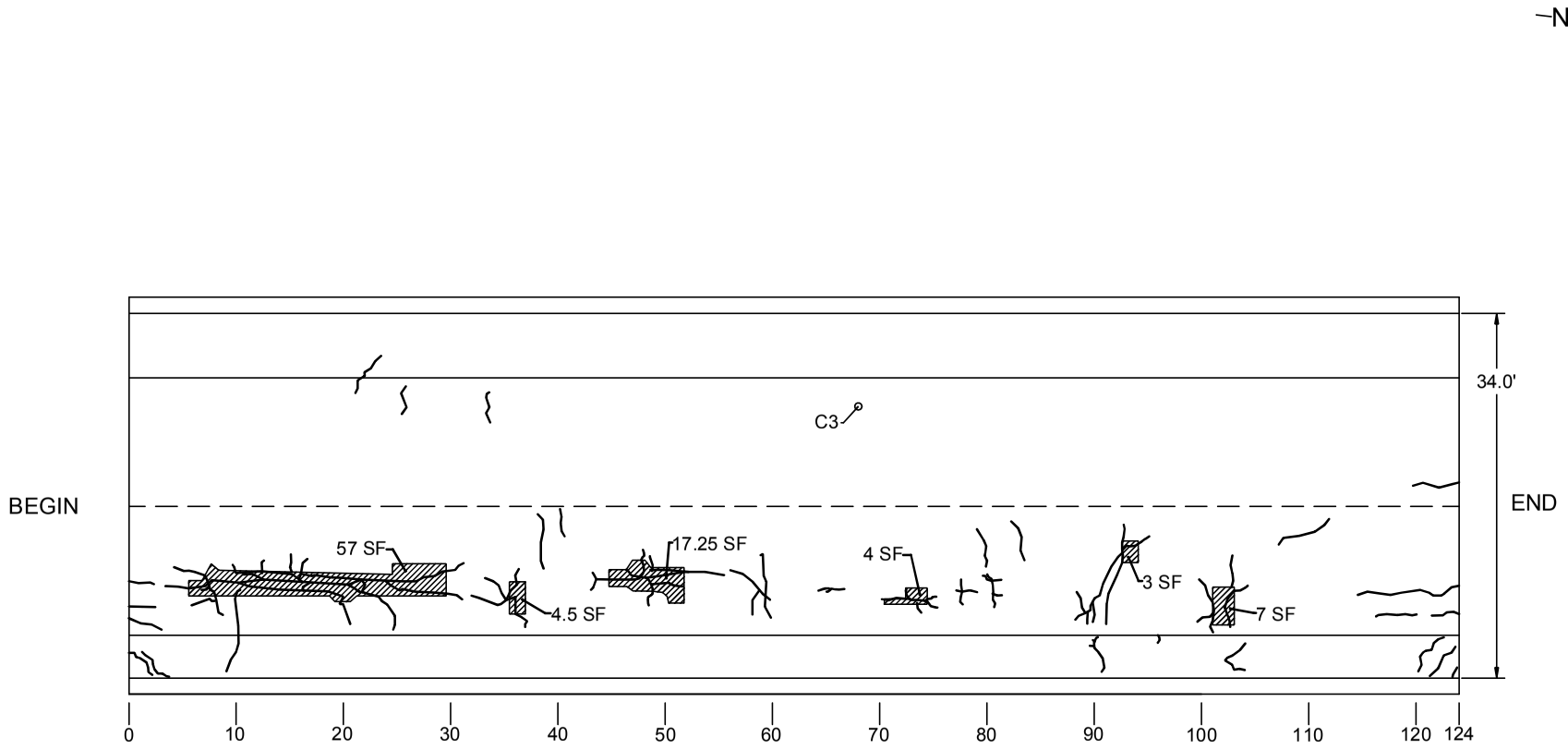

TOTAL DAMAGED AREA EQUALS 92.75 SF WHICH IS 2.2% OF DECK SURFACE

LEGEND

- Crack
- Core Location
- Hollow Concrete

BIN:1093571
I481 SB / CSX RR
Span 14 of 15

TOP OF DECK DETERIORATION SKETCH

NOT TO SCALE

DATE: 03/27/2014

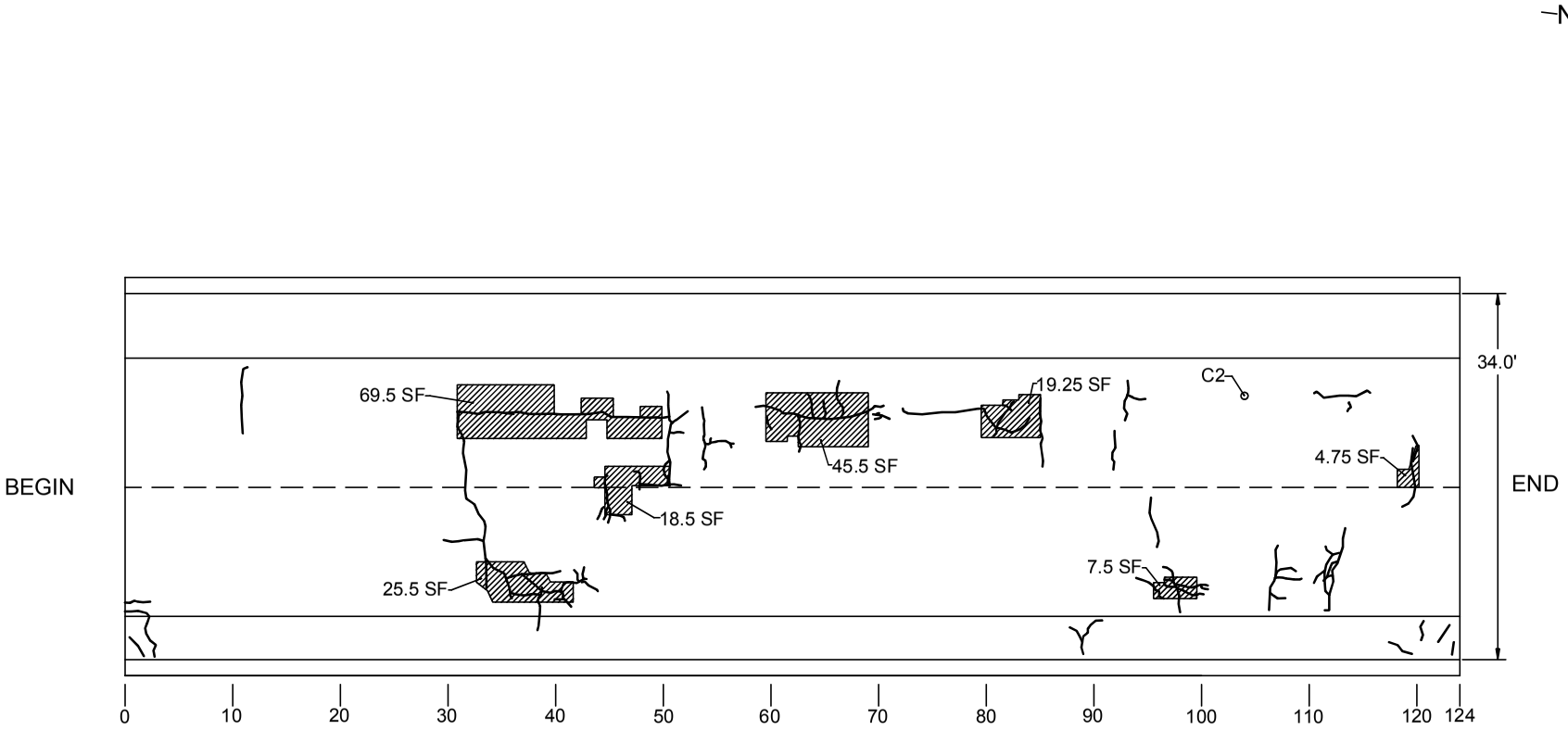

TOTAL DAMAGED AREA EQUALS 190.5 SF WHICH IS 4.5% OF DECK SURFACE

LEGEND

- Crack
- Core Location
- Hollow Concrete

BIN:1093571
I481 SB / CSX RR
Span 15 of 15

TOP OF DECK DETERIORATION SKETCH

NOT TO SCALE

DATE: 03/27/2014

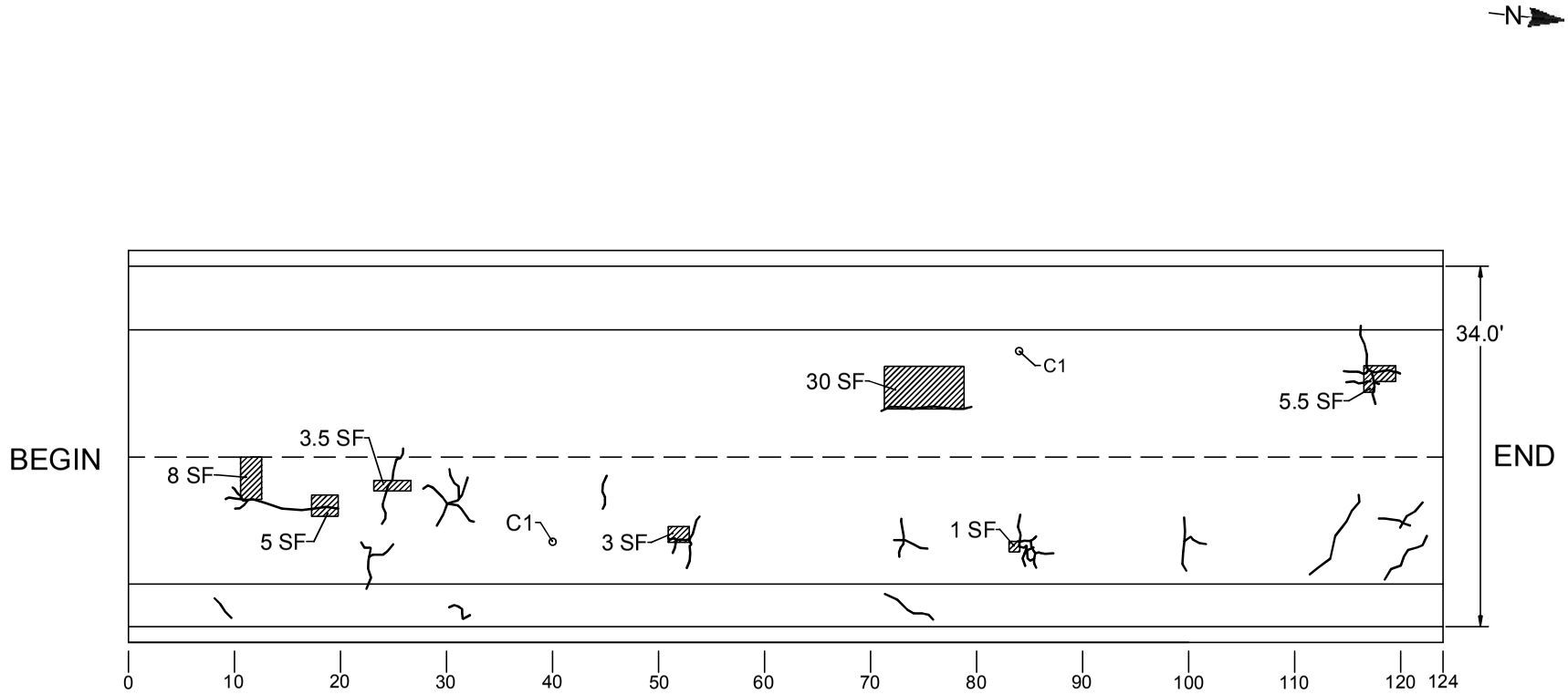

TOTAL DAMAGED AREA EQUALS 56 SF WHICH IS 1.3% OF DECK SURFACE

LEGEND

- Crack
- Core Location
- Hollow Concrete

BIN: 1093571
I481 SB / CSX TRANS/AMTRAK

PIER 1 DETERIORATION SKETCH

NOT TO SCALE

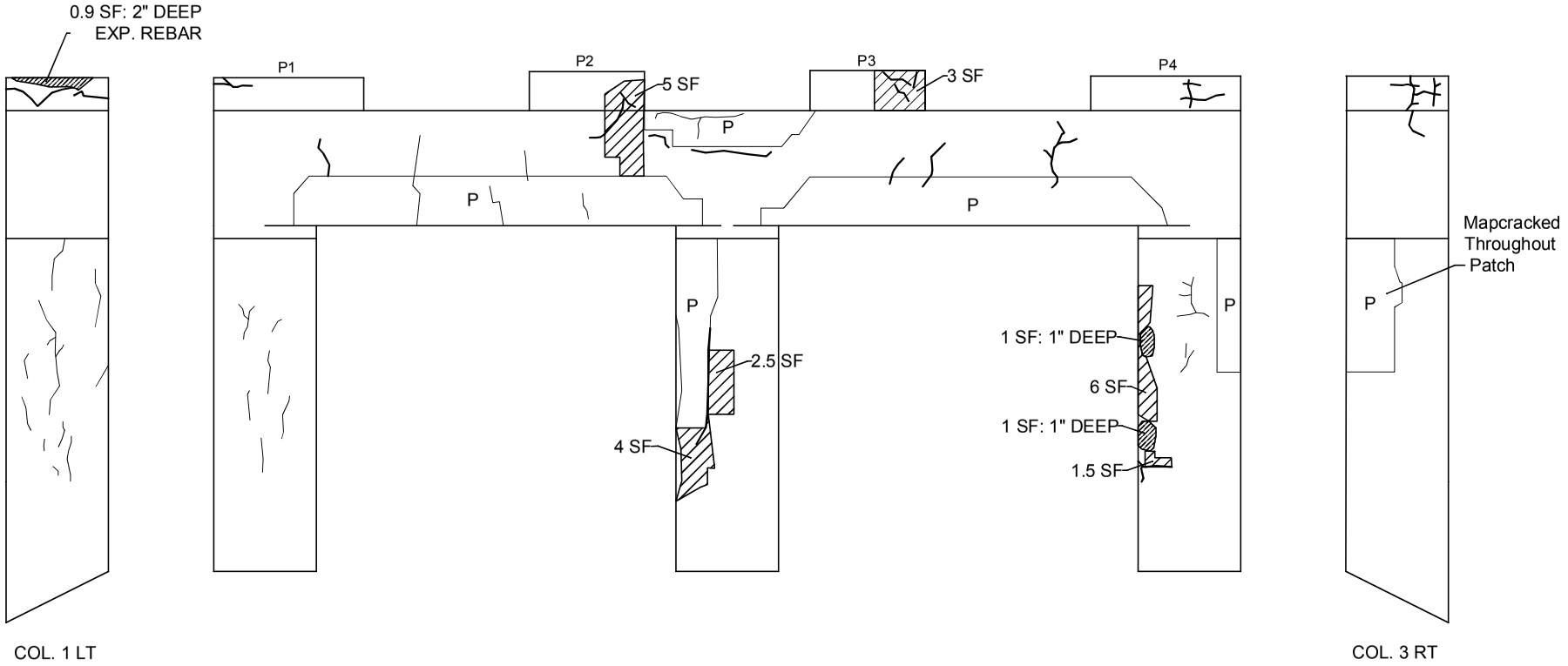

PIER 1 BEGIN ELEVATION

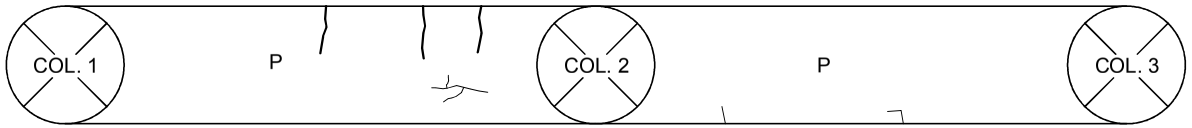

UNDERSIDE OF CAPBEAM

TOTAL DAMAGED AREA EQUALS 27.1 SF WHICH IS 2.3% OF PIER SURFACE

LEGEND

- Hollow Concrete (HC)
- Spall (S)
- P — Patch
- Crack (C)
- Hairline Crack (HL)

BIN: 1093571
I481 SB / CSX TRANS/AMTRAK

PIER 1 DETERIORATION SKETCH

NOT TO SCALE

* NOTE: P1 LT & P4 RT VIEWS LOCATED ON PIER 1 DETERIORATION SKETCH SHEET 1 OF 2

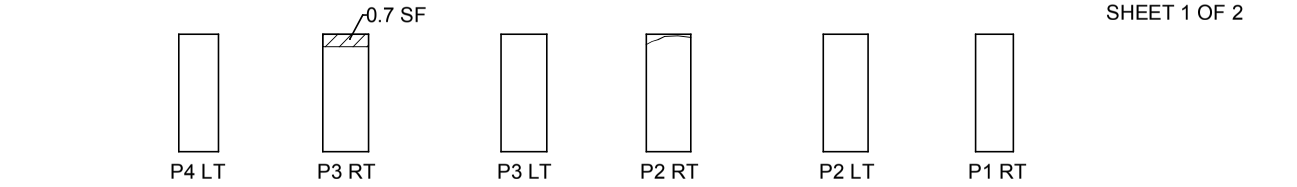

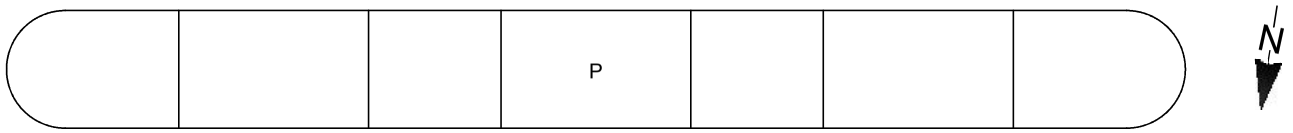

PLAN

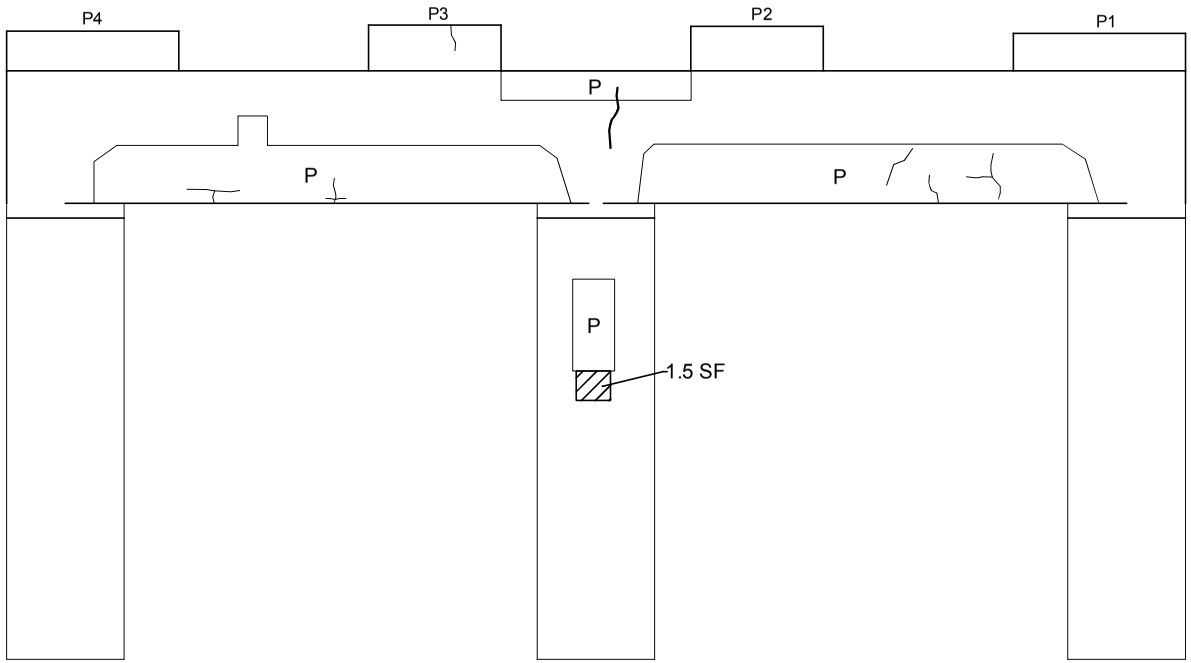

PIER 1 END ELEVATION

TOTAL DAMAGED AREA EQUALS 27.1 SF WHICH IS 2.3% OF PIER SURFACE

LEGEND
Hollow Concrete (HC)
Spall (S)
P Patch
Crack (C)
Hairline Crack (HL)

BIN: 1093571
I481 SB / CSX TRANS/AMTRAK

PIER 2 DETERIORATION SKETCH

NOT TO SCALE

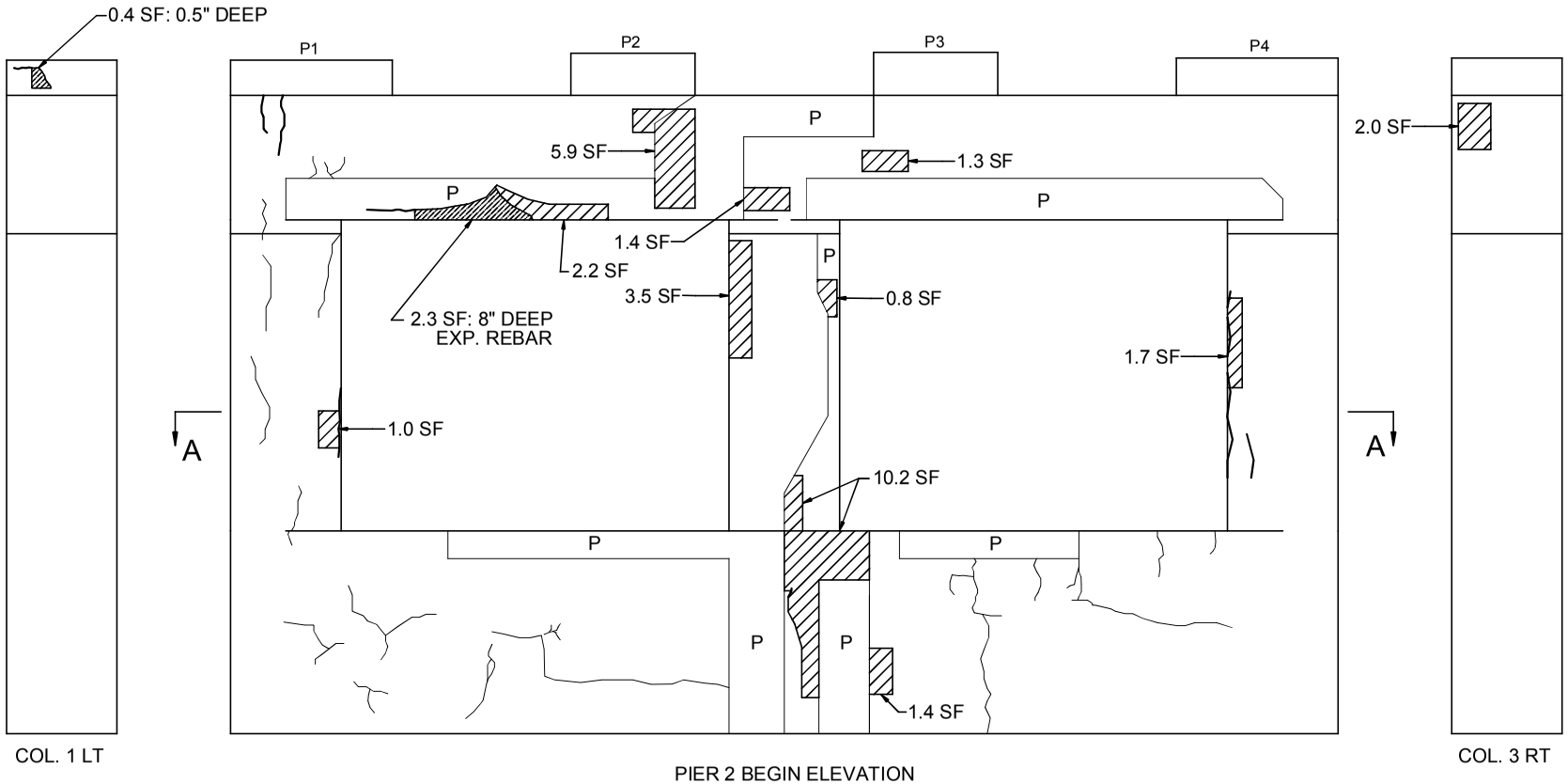

PIER 2 BEGIN ELEVATION

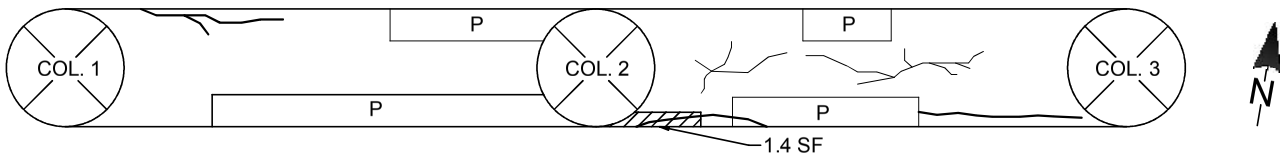

TOP OF STEM SOLID PIER SECTION A-A

TOTAL DAMAGED AREA EQUALS 98.8 SF
WHICH IS 5.4% OF PIER SURFACE

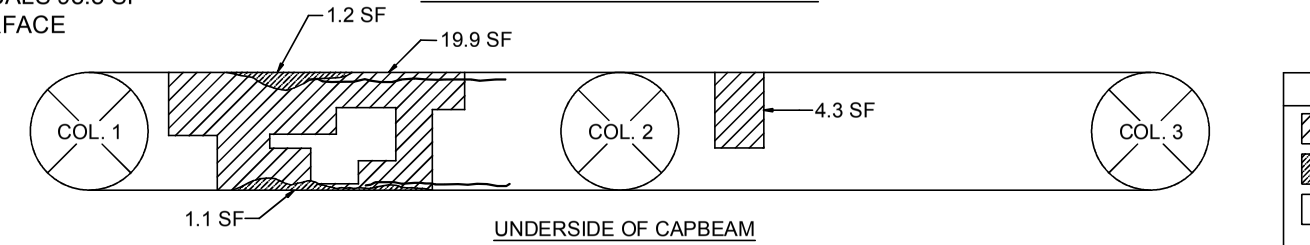

UNDERSIDE OF CAPBEAM

LEGEND

- Hollow Concrete (HC)
- Spall (S)
- P — Patch
- Crack (C)
- Hairline Crack (HL)

BIN: 1093571
I481 SB / CSX TRANS/AMTRAK

PIER 2 DETERIORATION SKETCH

NOT TO SCALE

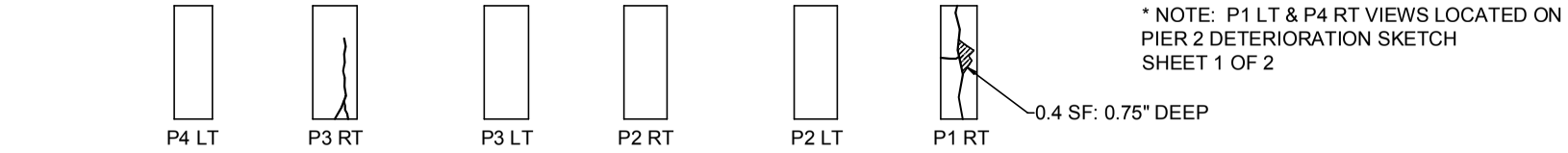

* NOTE: P1 LT & P4 RT VIEWS LOCATED ON PIER 2 DETERIORATION SKETCH SHEET 1 OF 2

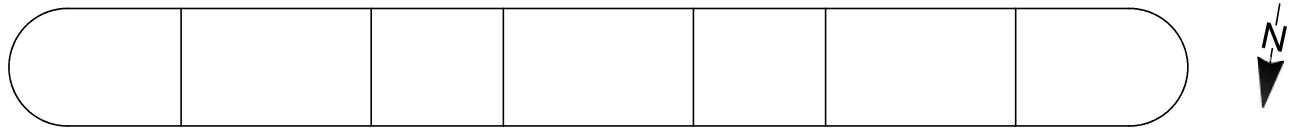

PLAN

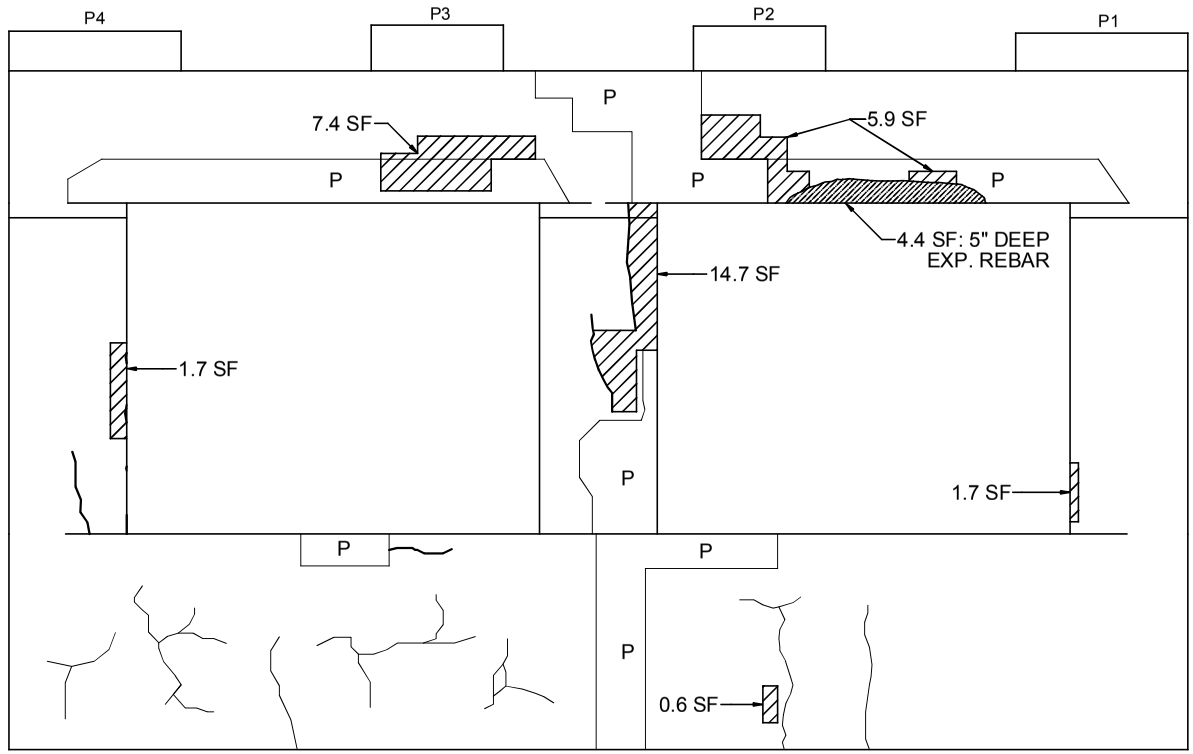

PIER 2 END ELEVATION

TOTAL DAMAGED AREA EQUALS 98.8 SF WHICH IS 5.4% OF PIER SURFACE

LEGEND

- Hollow Concrete (HC)
- Spall (S)
- P — Patch
- Crack (C)
- Hairline Crack (HL)

BIN: 1093571
I481 SB / CSX TRANS/AMTRAK

PIER 3 DETERIORATION SKETCH

NOT TO SCALE

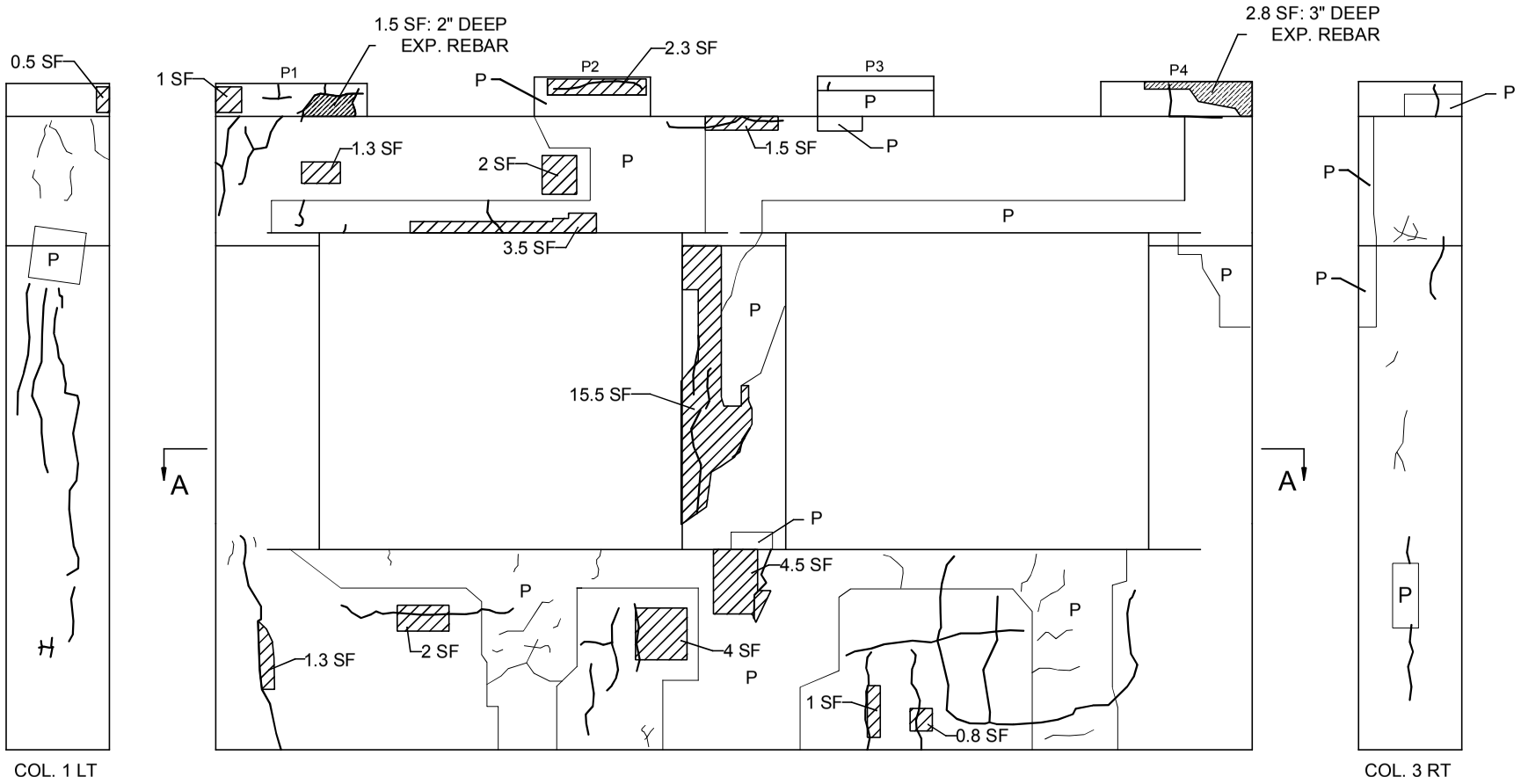

PIER 3 BEGIN ELEVATION

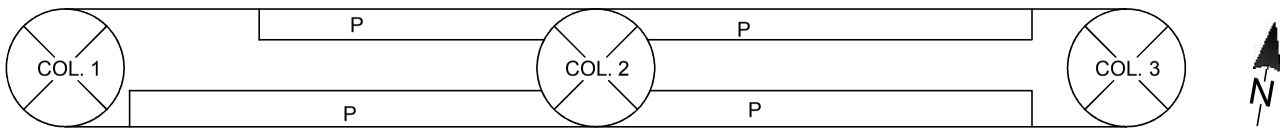

TOP OF STEM SOLID PIER SECTION A-A

TOTAL DAMAGED AREA EQUALS 119.5 SF
WHICH IS 6.3% OF PIER SURFACE

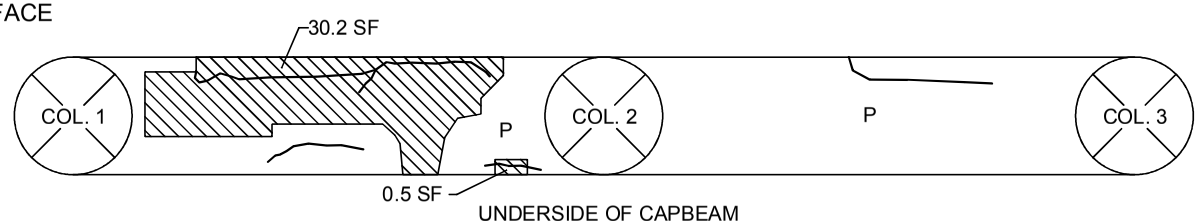

UNDERSIDE OF CAPBEAM

LEGEND
Hollow Concrete (HC)
Spall (S)
P Patch
Crack (C)
Hairline Crack (HL)

BIN: 1093571
I481 SB / CSX TRANS/AMTRAK

PIER 3 DETERIORATION SKETCH

NOT TO SCALE

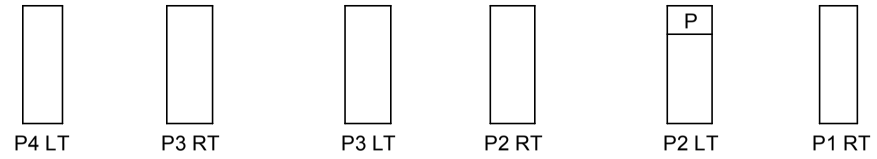

* NOTE: P1 LT & P4 RT VIEWS LOCATED ON PIER 3 DETERIORATION SKETCH SHEET 1 OF 2



PLAN

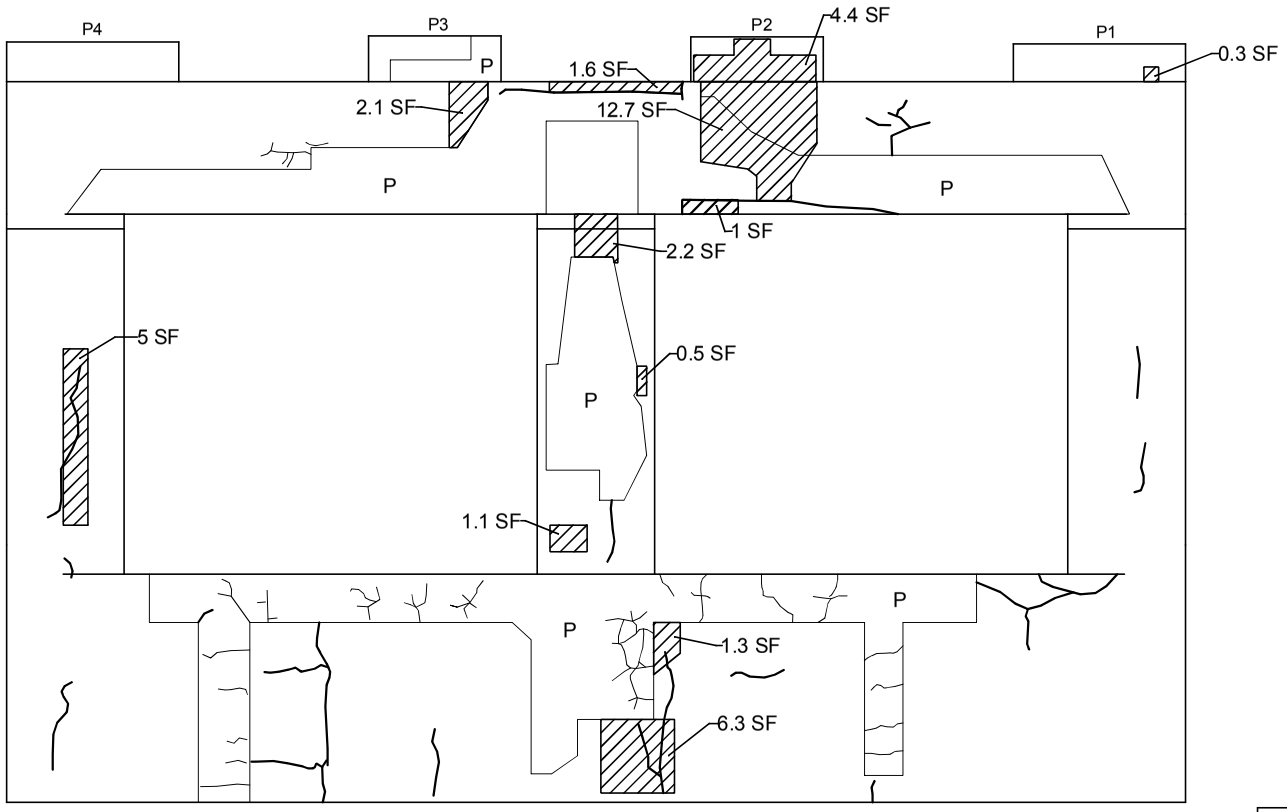

PIER 3 END ELEVATION

TOTAL DAMAGED AREA EQUALS 119.5 SF WHICH IS 6.3% OF PIER SURFACE

LEGEND
Hollow Concrete (HC)
Spall (S)
P Patch
Crack (C)
Hairline Crack (HL)

BIN: 1093571
I481 SB / CSX TRANS/AMTRAK

PIER 4 DETERIORATION SKETCH

NOT TO SCALE

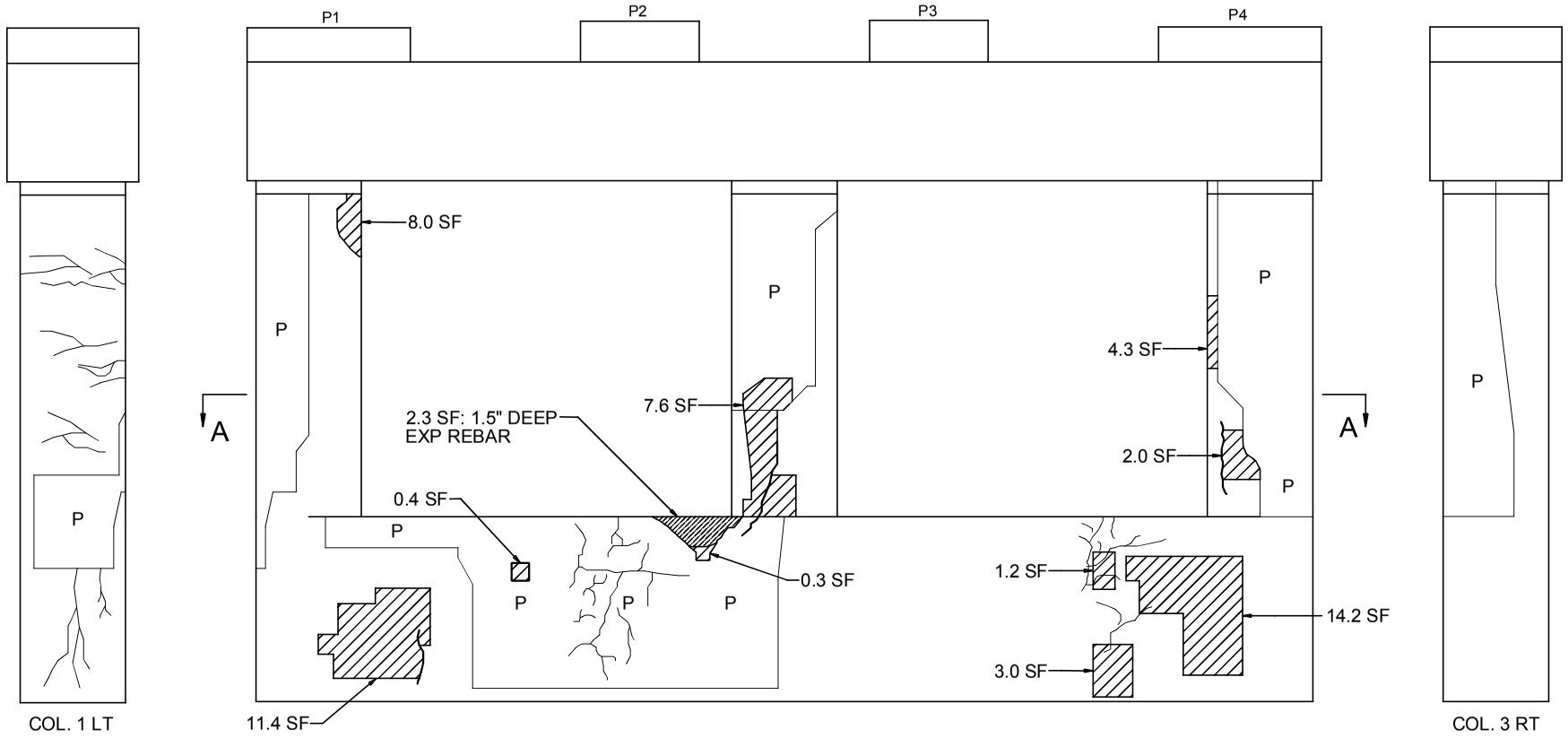

PIER 4 BEGIN ELEVATION

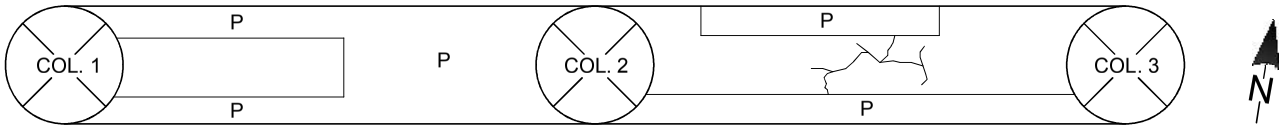

TOP OF STEM SOLID PIER SECTION A-A

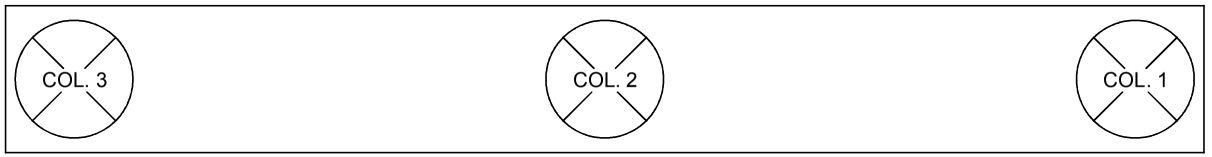

UNDERSIDE OF CAPBEAM

TOTAL DAMAGED AREA EQUALS 74.1 SF
WHICH IS 3.7% OF PIER SURFACE

LEGEND

- Hollow Concrete (HC)
- Spall (S)
- P — Patch
- Crack (C)
- Hairline Crack (HL)

BIN: 1093571
I481 SB / CSX TRANS/AMTRAK

PIER 4 DETERIORATION SKETCH

NOT TO SCALE

* NOTE: P1 LT & P4 RT VIEWS LOCATED ON PIER 4 DETERIORATION SKETCH SHEET 1 OF 2

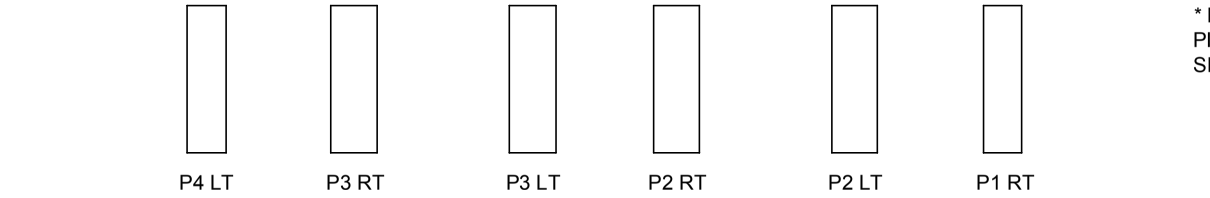

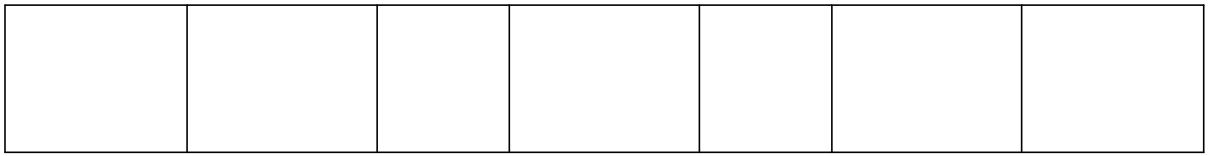

PLAN

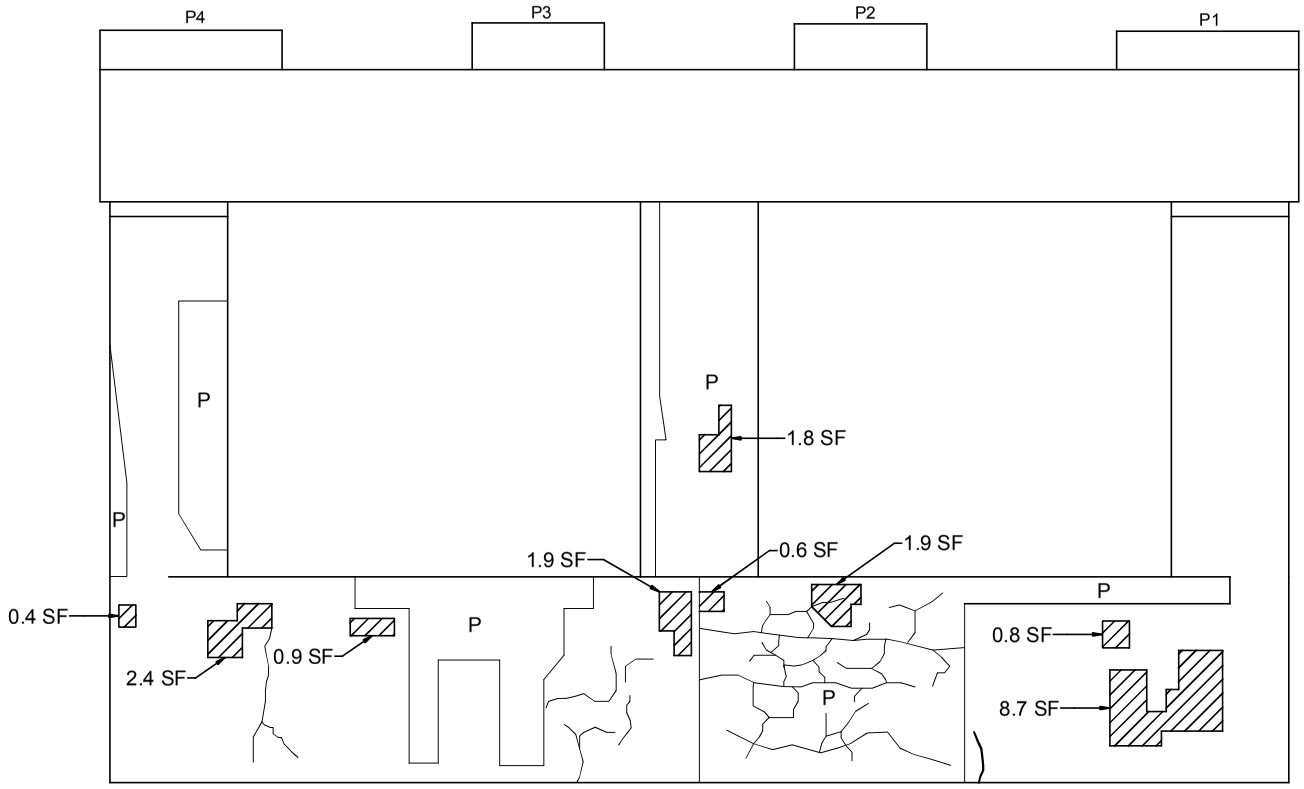

PIER 4 END ELEVATION

TOTAL DAMAGED AREA EQUALS 74.1 SF WHICH IS 3.7% OF PIER SURFACE

LEGEND

- Hollow Concrete (HC)
- Spall (S)
- P — Patch
- Crack (C)
- Hairline Crack (HL)

BIN: 1093571
I481 SB / CSX TRANS/AMTRAK

PIER 5 DETERIORATION SKETCH

NOT TO SCALE

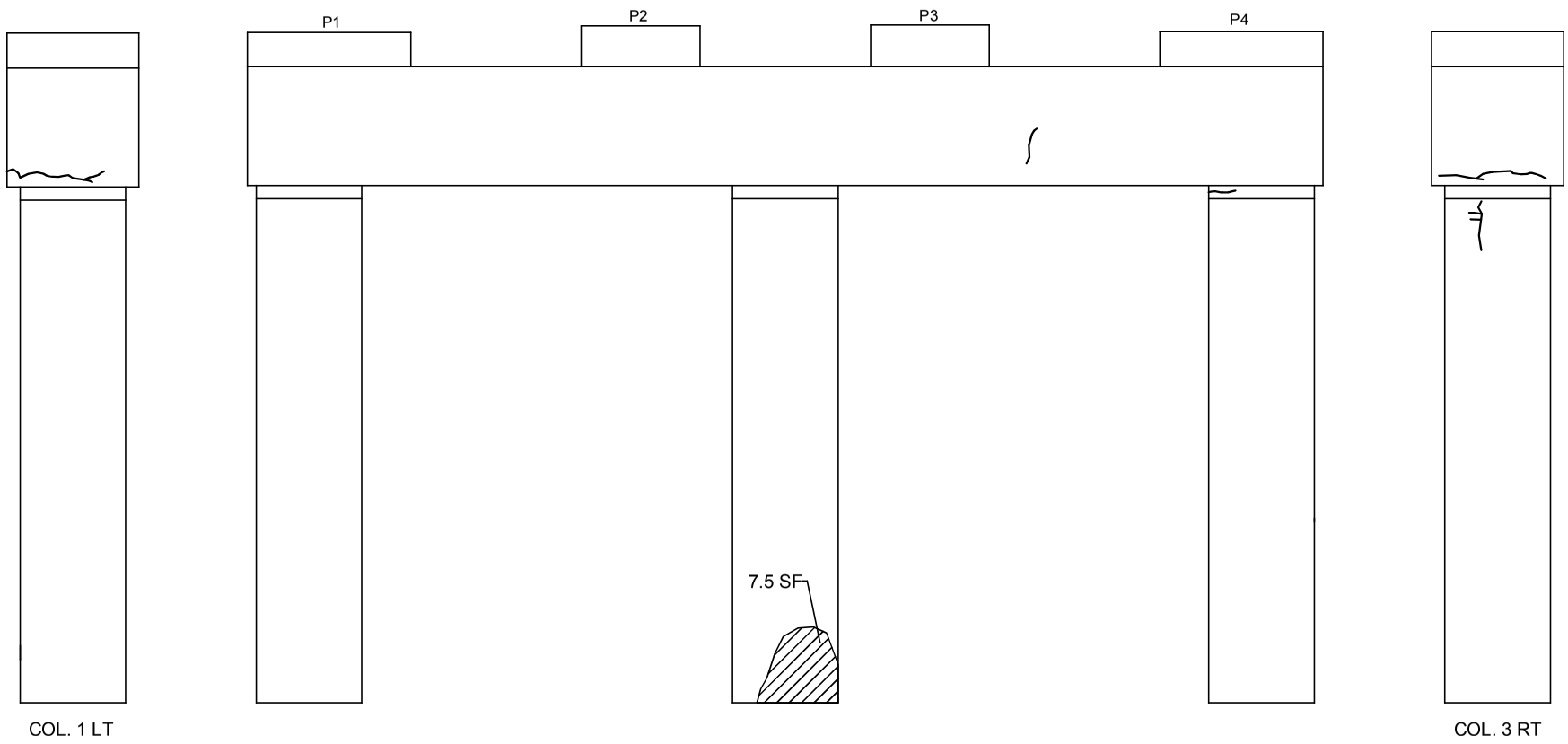

PIER 5 BEGIN ELEVATION

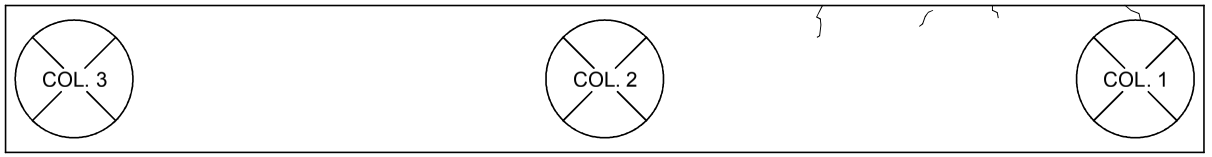

UNDERSIDE OF CAPBEAM

TOTAL DAMAGED AREA EQUALS 10.2 SF WHICH IS 0.6% OF PIER SURFACE

LEGEND

- Hollow Concrete (HC)
- Spall (S)
- P — Patch
- Crack (C)
- Hairline Crack (HL)

BIN: 1093571
I481 SB / CSX TRANS/AMTRAK

PIER 5 DETERIORATION SKETCH

NOT TO SCALE

* NOTE: P1 LT & P4 RT VIEWS LOCATED ON PIER 5 DETERIORATION SKETCH SHEET 1 OF 2

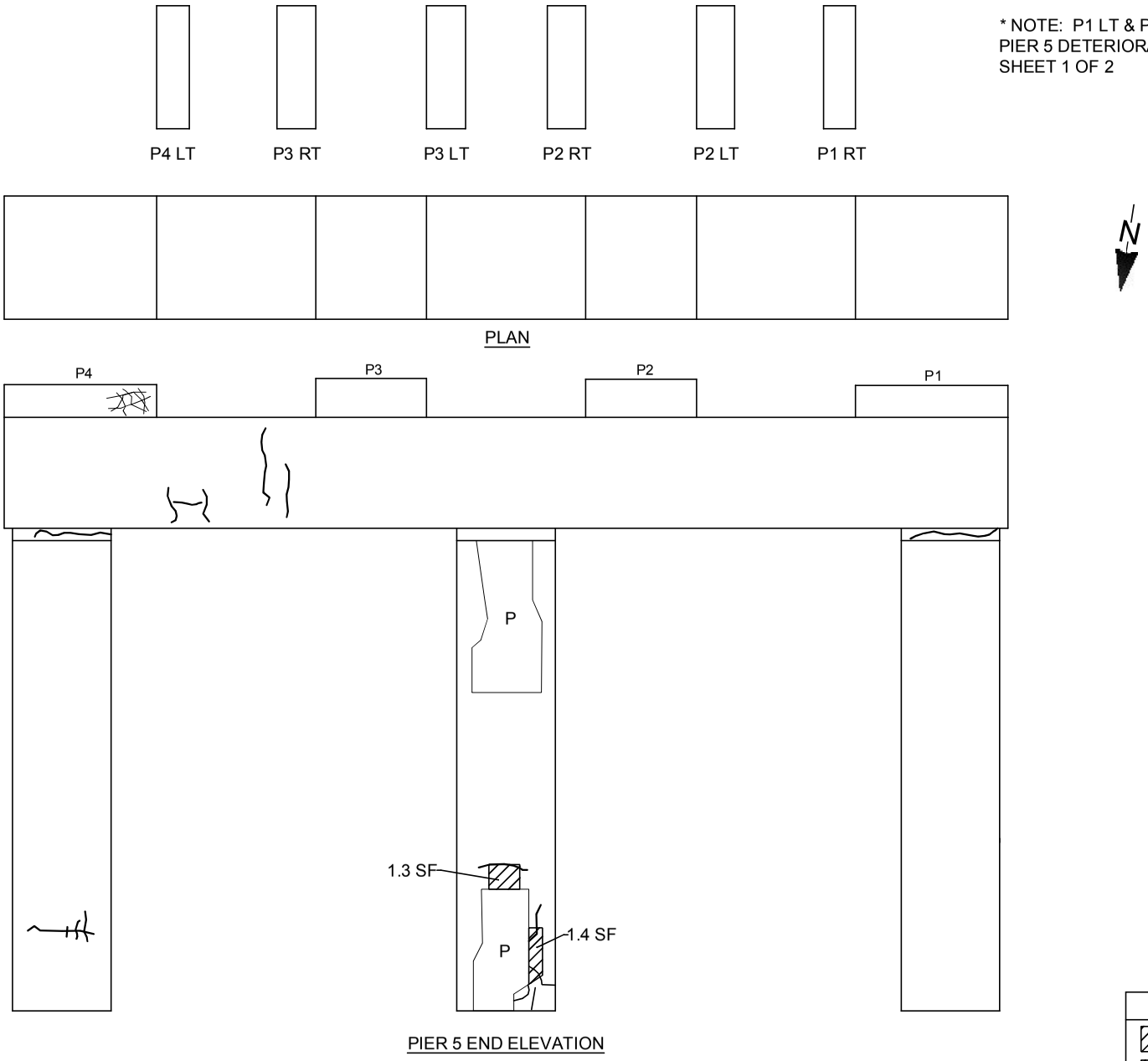

TOTAL DAMAGED AREA EQUALS 10.2 SF WHICH IS 0.6% OF PIER SURFACE

LEGEND

- Hollow Concrete (HC)
- Spall (S)
- P — Patch
- Crack (C)
- Hairline Crack (HL)

BIN: 1093571
I481 SB / CSX TRANS/AMTRAK

PIER 6 DETERIORATION SKETCH

NOT TO SCALE

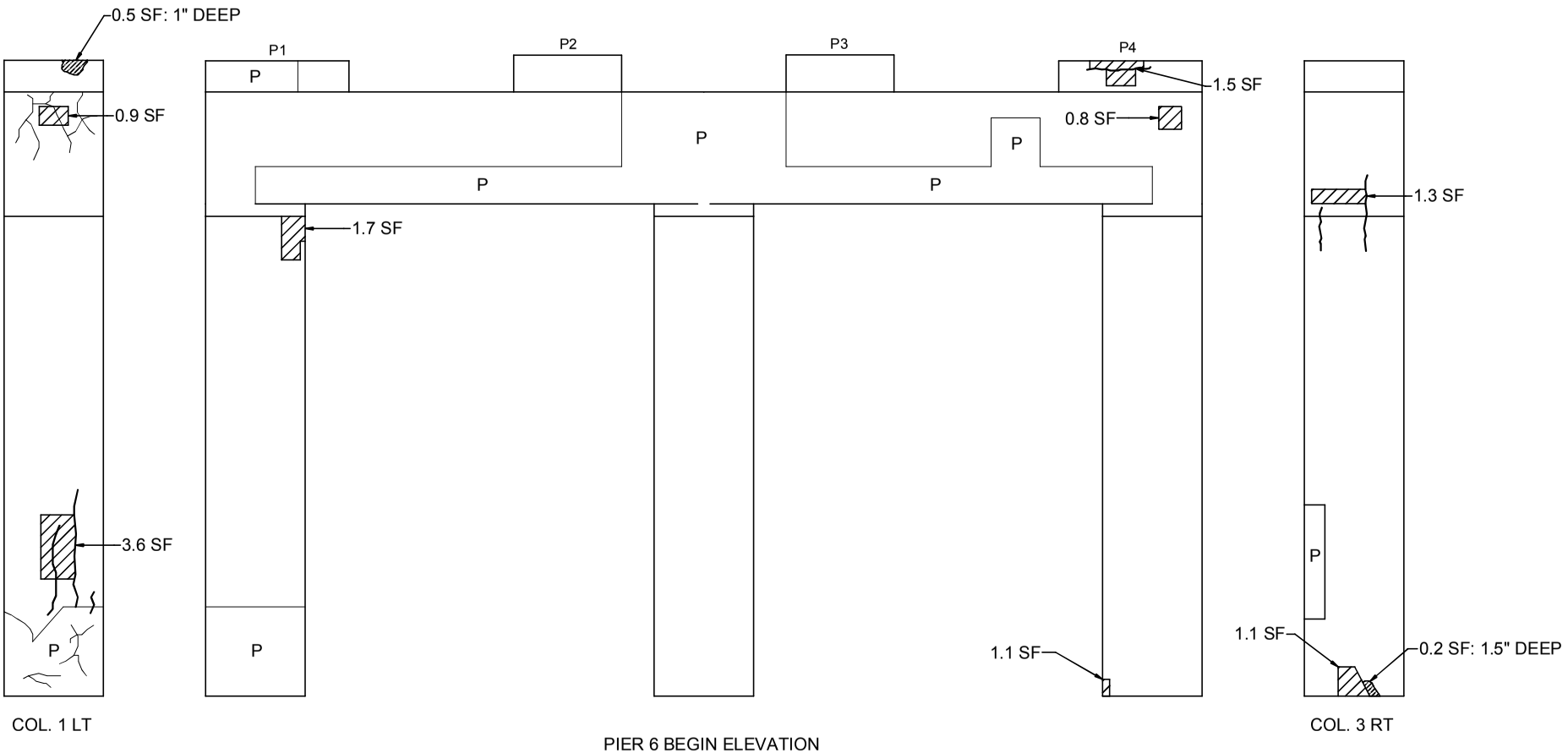

PIER 6 BEGIN ELEVATION

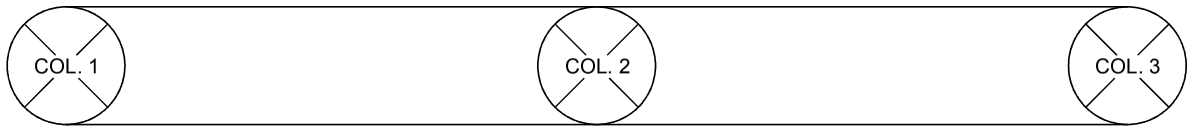

UNDERSIDE OF CAPBEAM

TOTAL DAMAGED AREA EQUALS 22.3 SF WHICH IS 1.4% OF PIER SURFACE

LEGEND
Hollow Concrete (HC)
Spall (S)
P — Patch
Crack (C)
Hairline Crack (HL)

BIN: 1093571
I481 SB / CSX TRANS/AMTRAK

PIER 6 DETERIORATION SKETCH

NOT TO SCALE

* NOTE: P1 LT & P4 RT VIEWS LOCATED ON PIER 6 DETERIORATION SKETCH SHEET 1 OF 2

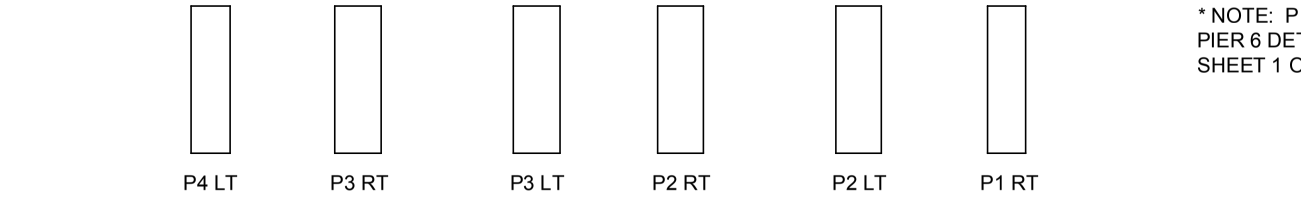

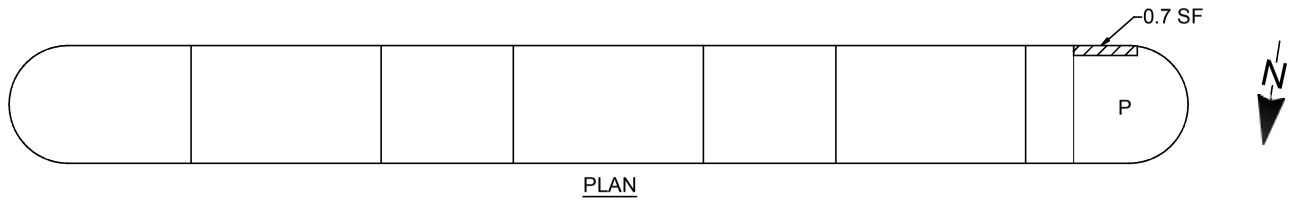

PLAN

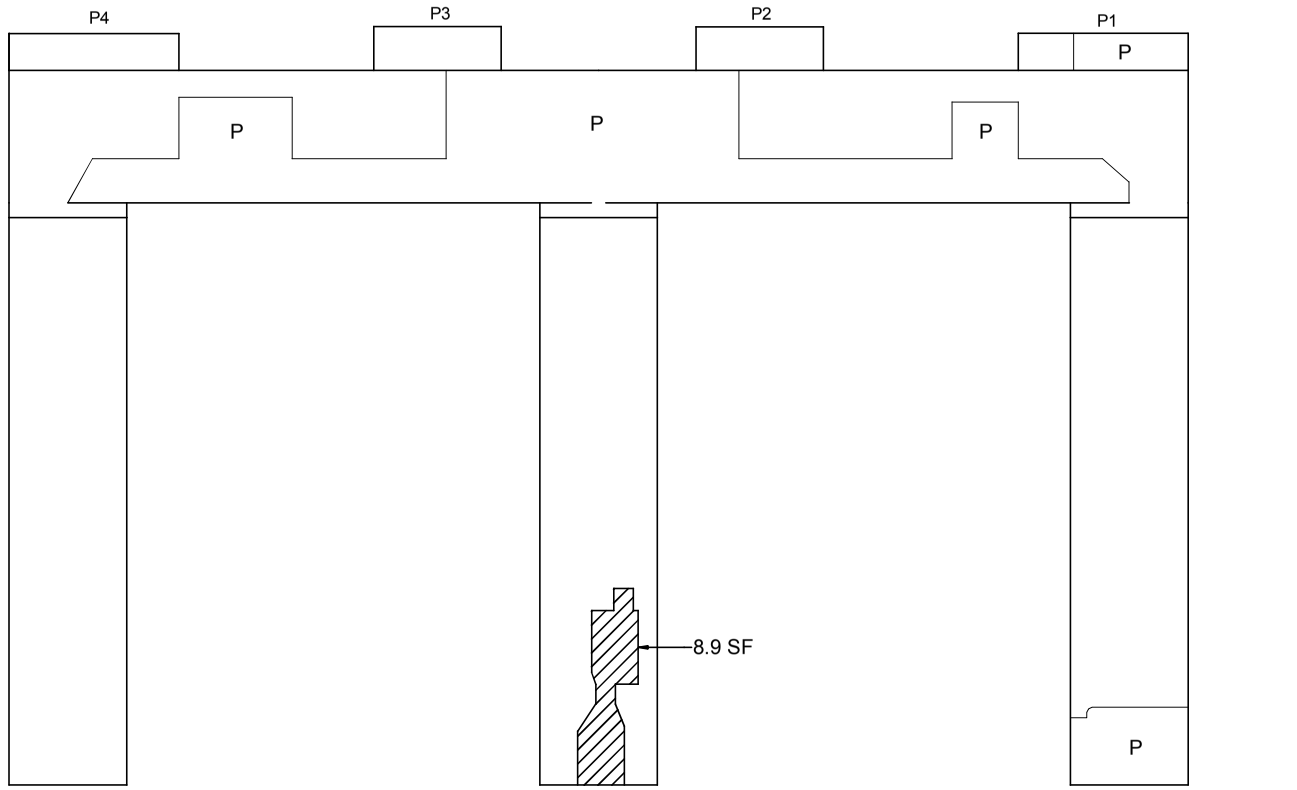

PIER 6 END ELEVATION

TOTAL DAMAGED AREA EQUALS 22.3 SF
WHICH IS 1.4% OF PIER SURFACE

LEGEND
Hollow Concrete (HC)
Spall (S)
P Patch
Crack (C)
Hairline Crack (HL)

BIN: 1093571
I481 SB / CSX TRANS/AMTRAK

PIER 7 DETERIORATION SKETCH

NOT TO SCALE

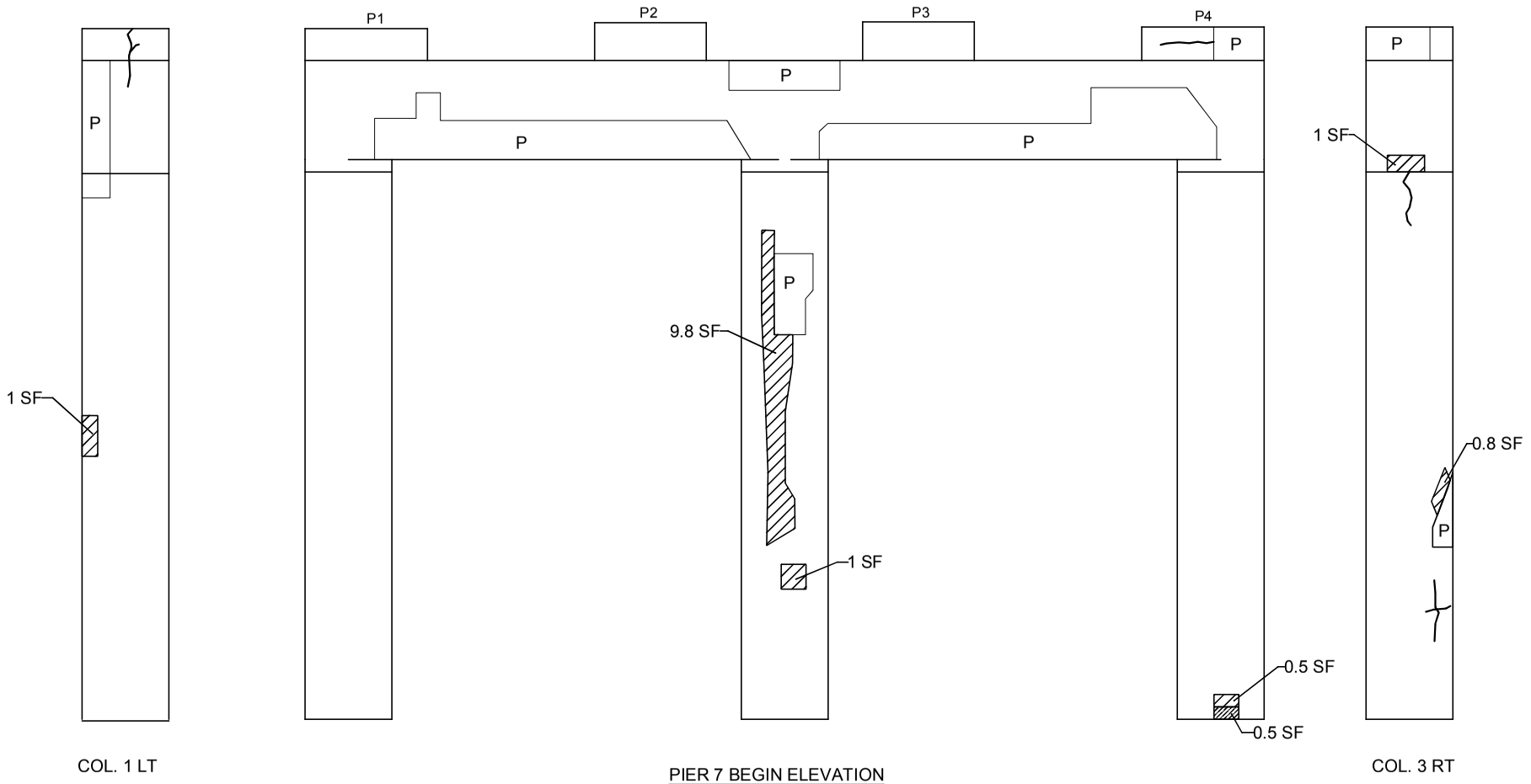

COL. 1 LT

PIER 7 BEGIN ELEVATION

COL. 3 RT

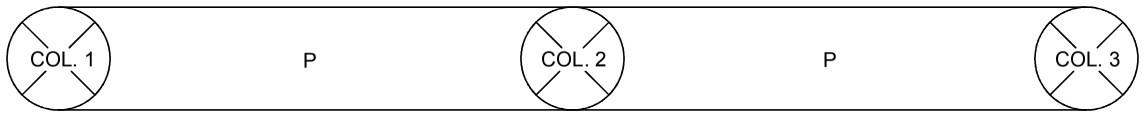

UNDERSIDE OF CAPBEAM

TOTAL DAMAGED AREA EQUALS 30.1 SF WHICH IS 2.2% OF PIER SURFACE

LEGEND
Hollow Concrete (HC)
Spall (S)
P Patch
Crack (C)
Hairline Crack (HL)

BIN: 1093571
I481 SB / CSX TRANS/AMTRAK

PIER 7 DETERIORATION SKETCH

NOT TO SCALE

* NOTE: P1 LT & P4 RT VIEWS LOCATED ON PIER 7 DETERIORATION SKETCH SHEET 1 OF 2

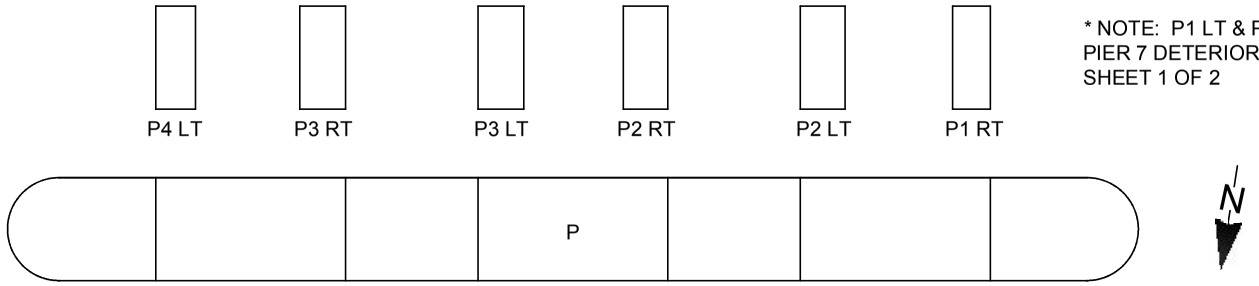

PLAN

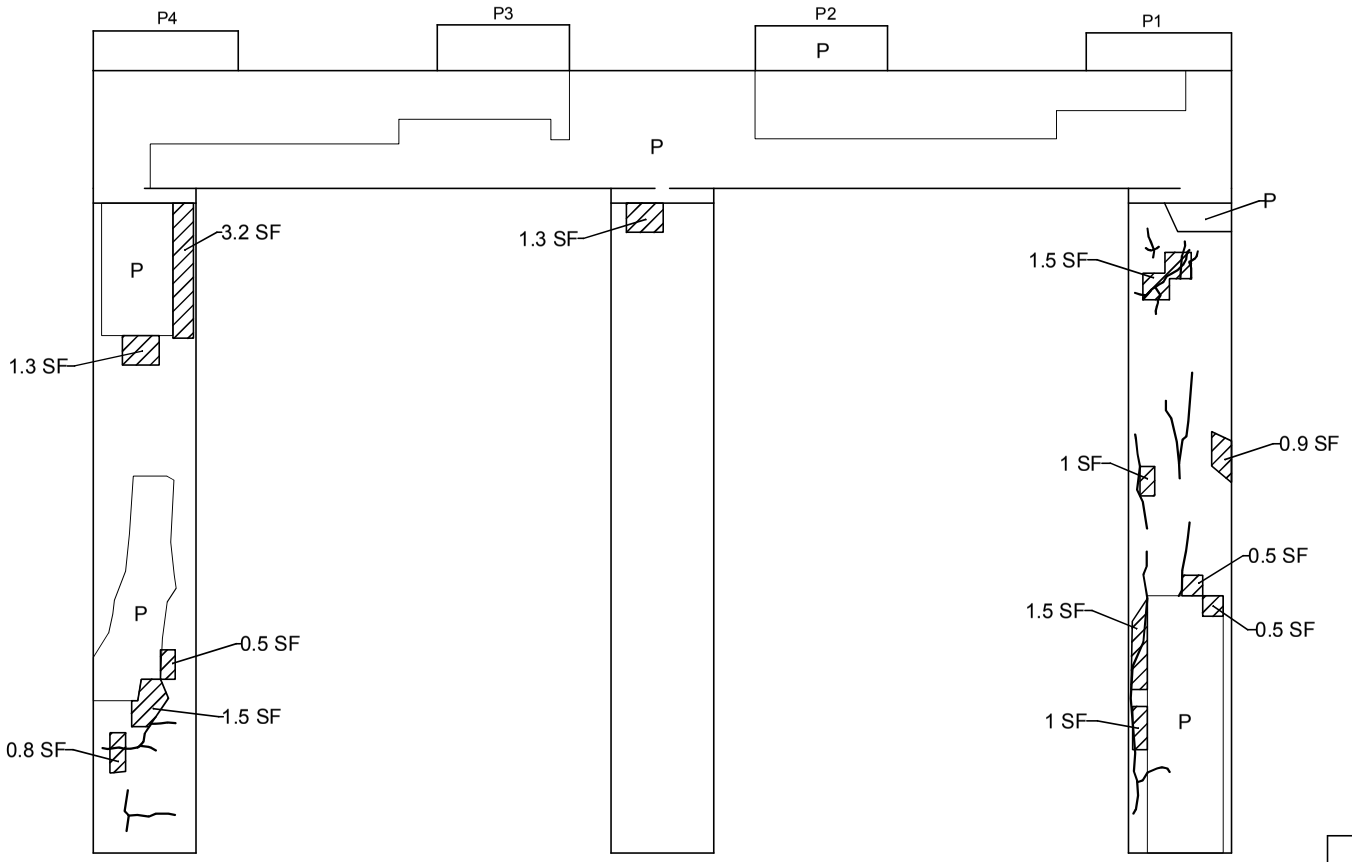

PIER 7 END ELEVATION

TOTAL DAMAGED AREA EQUALS 30.1 SF WHICH IS 2.2% OF PIER SURFACE

LEGEND
Hollow Concrete (HC)
Spall (S)
P Patch
Crack (C)
Hairline Crack (HL)

BIN: 1093571
I481 SB / CSX TRANS/AMTRAK

PIER 8 DETERIORATION SKETCH

NOT TO SCALE

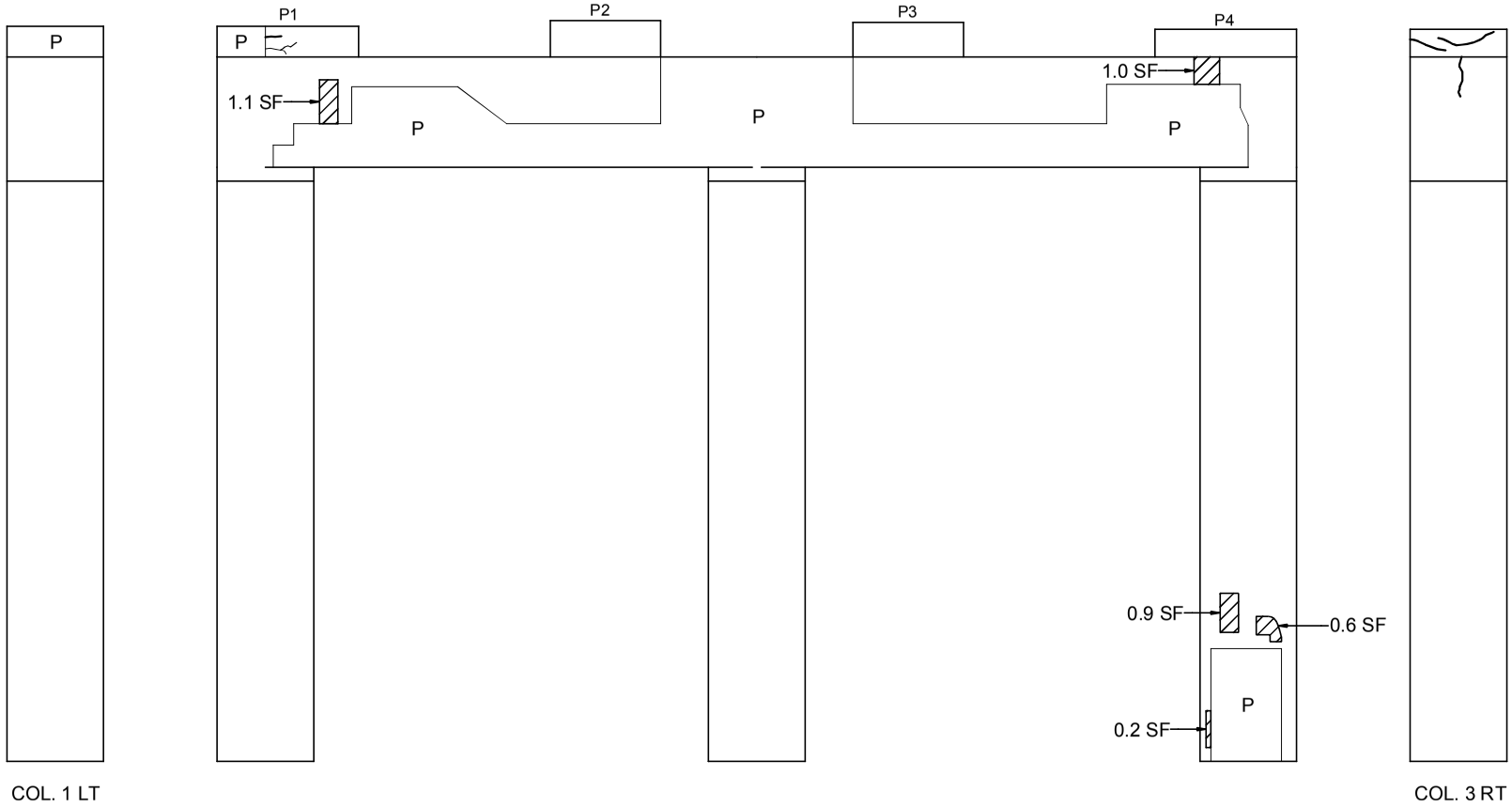

PIER 8 BEGIN ELEVATION

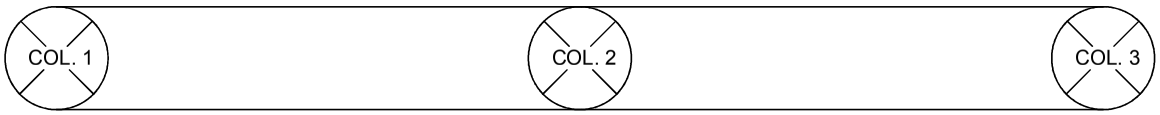

UNDERSIDE OF CAPBEAM

TOTAL DAMAGED AREA EQUALS 7.2 SF WHICH IS 0.5% OF PIER SURFACE

LEGEND
Hollow Concrete (HC)
Spall (S)
P Patch
Crack (C)
Hairline Crack (HL)

BIN: 1093571
I481 SB / CSX TRANS/AMTRAK

PIER 8 DETERIORATION SKETCH

NOT TO SCALE

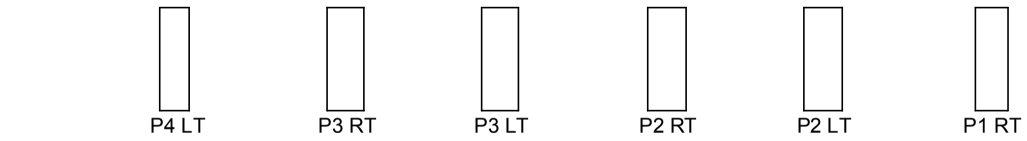

* NOTE: P1 LT & P4 RT VIEWS LOCATED ON PIER 8 DETERIORATION SKETCH SHEET 1 OF 2

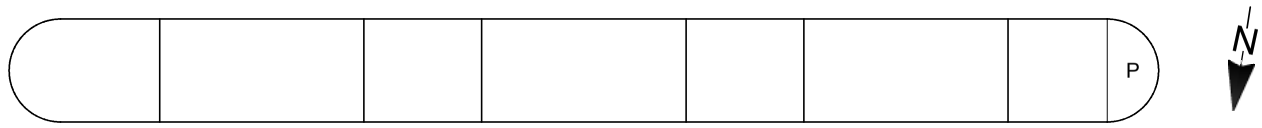

PLAN

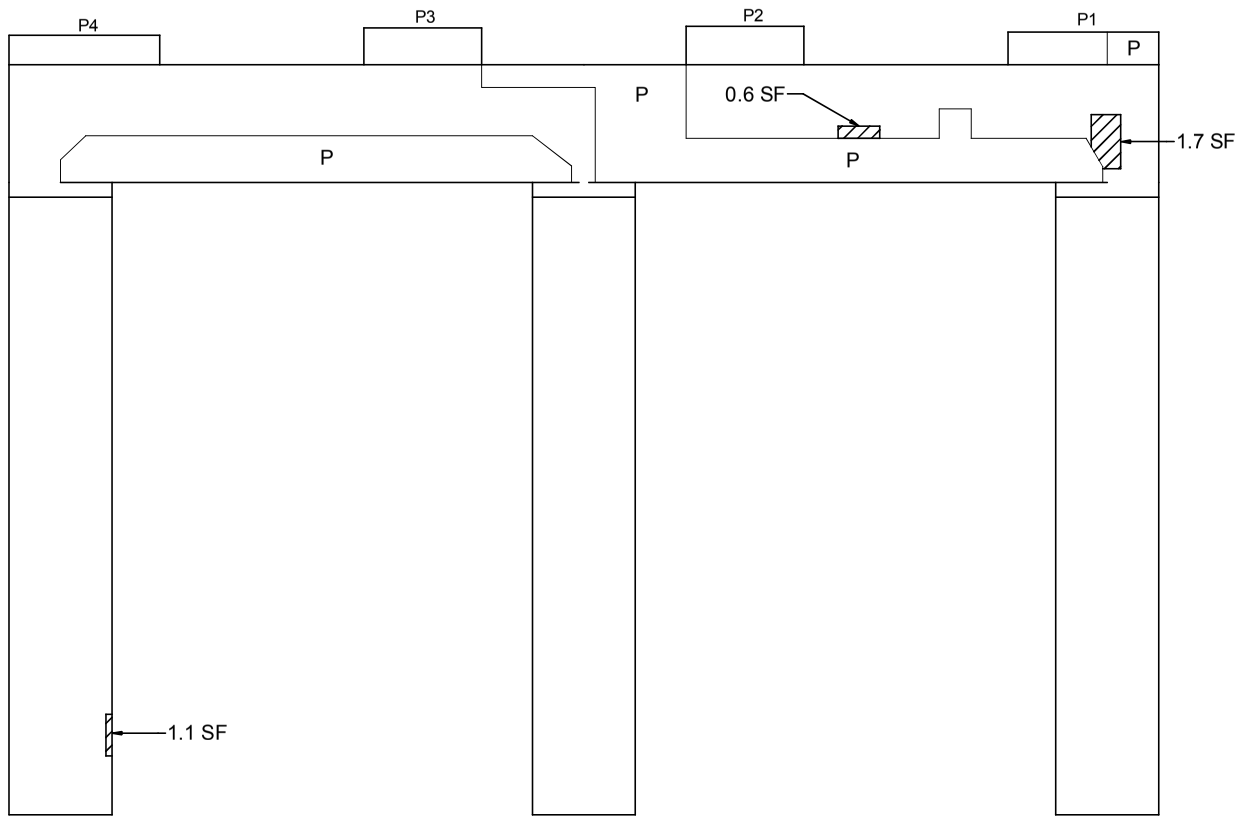

PIER 8 END ELEVATION

TOTAL DAMAGED AREA EQUALS 7.2 SF
WHICH IS 0.5% OF PIER SURFACE

LEGEND
Hollow Concrete (HC)
Spall (S)
P Patch
Crack (C)
Hairline Crack (HL)

BIN: 1093571
I481 SB / CSX TRANS/AMTRAK

PIER 9 DETERIORATION SKETCH

NOT TO SCALE

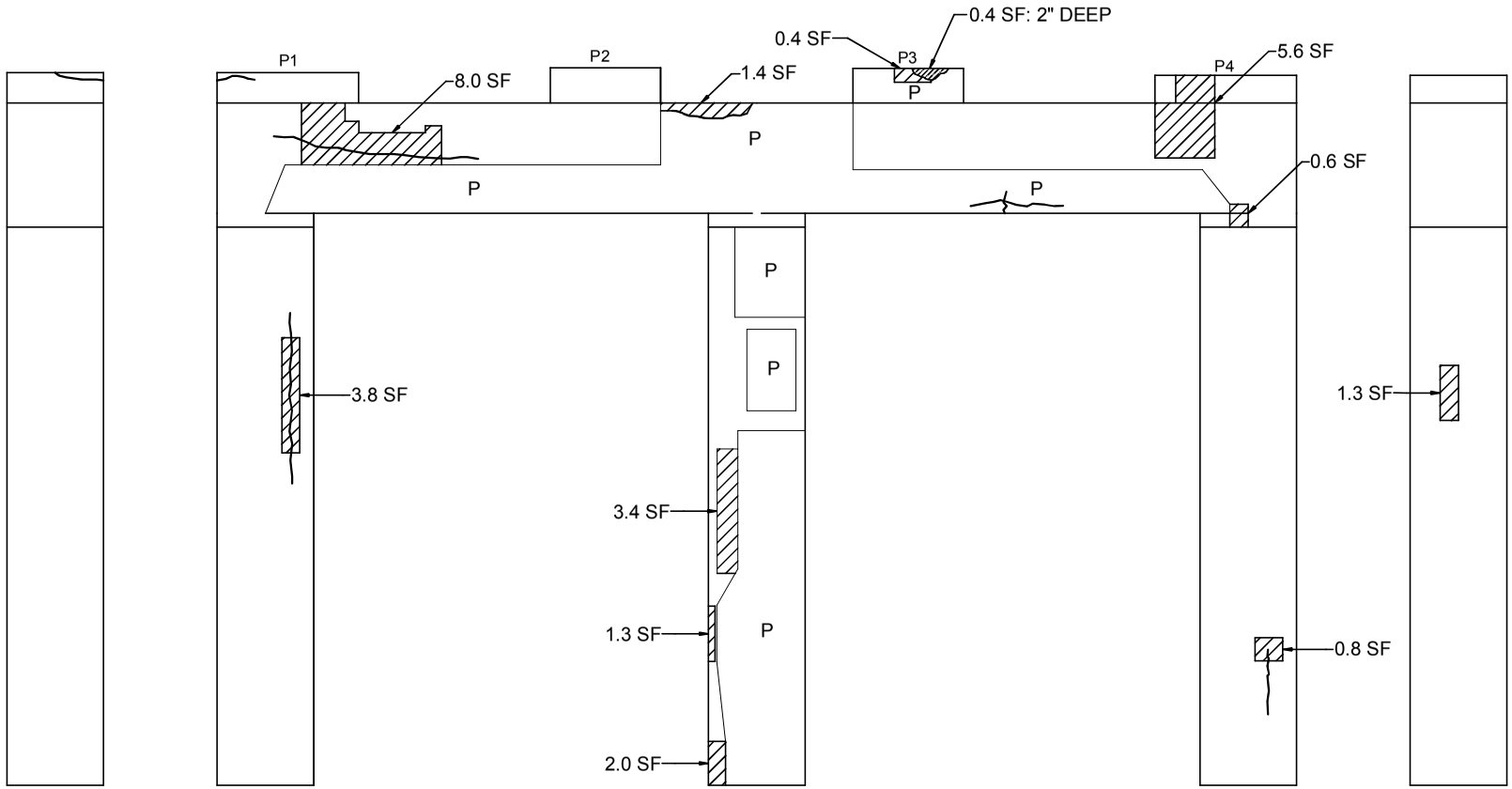

PIER 9 BEGIN ELEVATION

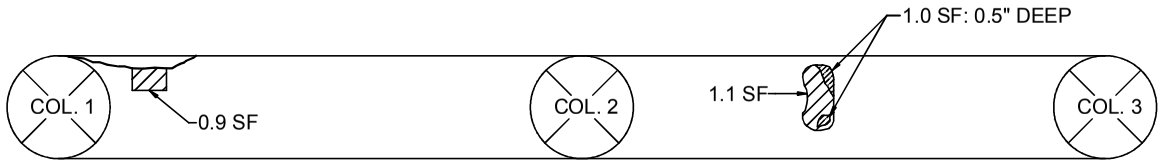

UNDERSIDE OF CAPBEAM

TOTAL DAMAGED AREA EQUALS 34.0 SF WHICH IS 2.4% OF PIER SURFACE

LEGEND
Hollow Concrete (HC)
Spall (S)
P Patch
Crack (C)
Hairline Crack (HL)

BIN: 1093571
I481 SB / CSX TRANS/AMTRAK

PIER 9 DETERIORATION SKETCH

NOT TO SCALE

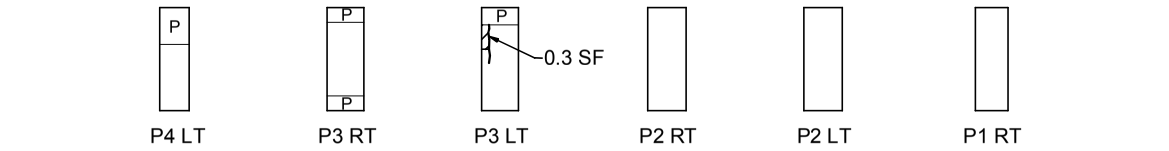

* NOTE: P1 LT & P4 RT VIEWS LOCATED ON PIER 9 DETERIORATION SKETCH SHEET 1 OF 2

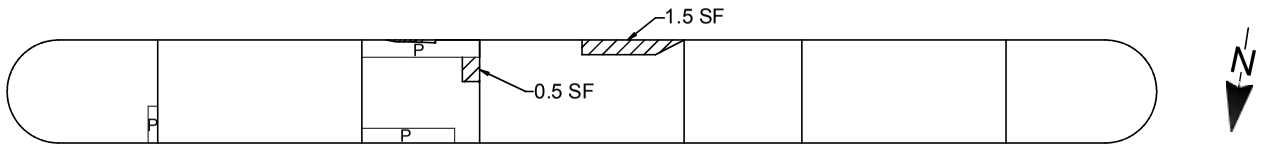

PLAN

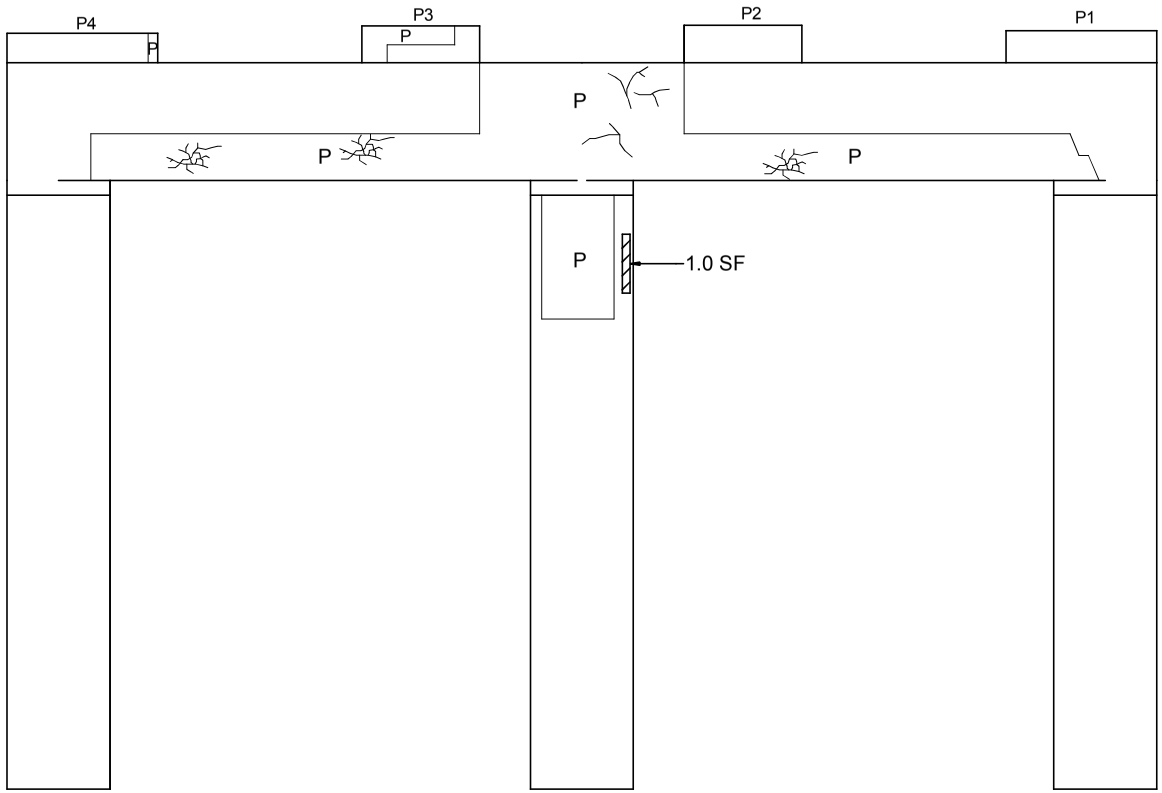

PIER 9 END ELEVATION

TOTAL DAMAGED AREA EQUALS 34.0 SF
WHICH IS 2.4% OF PIER SURFACE

LEGEND
Hollow Concrete (HC)
Spall (S)
P Patch
Crack (C)
Hairline Crack (HL)

BIN: 1093571
I481 SB / CSX TRANS/AMTRAK

PIER 10 DETERIORATION SKETCH

NOT TO SCALE

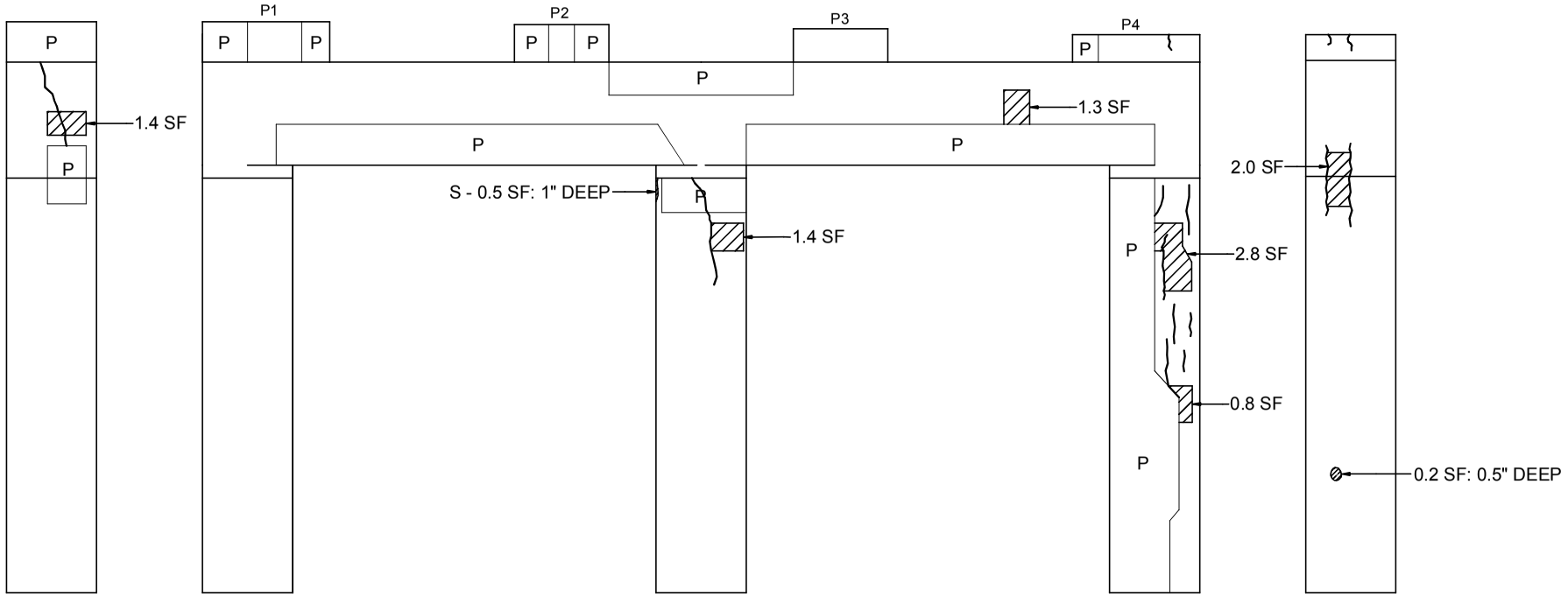

COL. 1 LT

PIER 10 BEGIN ELEVATION

COL. 3 RT

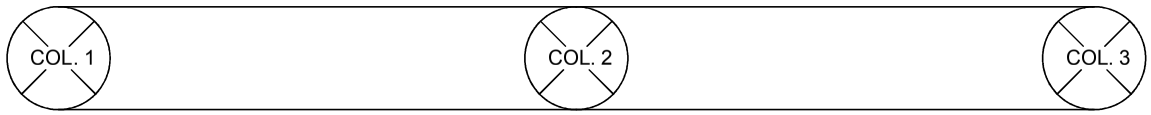

UNDERSIDE OF CAPBEAM

TOTAL DAMAGED AREA EQUALS 27.5 SF WHICH IS 2.1% OF PIER SURFACE

LEGEND
Hollow Concrete (HC)
Spall (S)
P — Patch
Crack (C)
Hairline Crack (HL)

BIN: 1093571
I481 SB / CSX TRANS/AMTRAK

PIER 10 DETERIORATION SKETCH

NOT TO SCALE

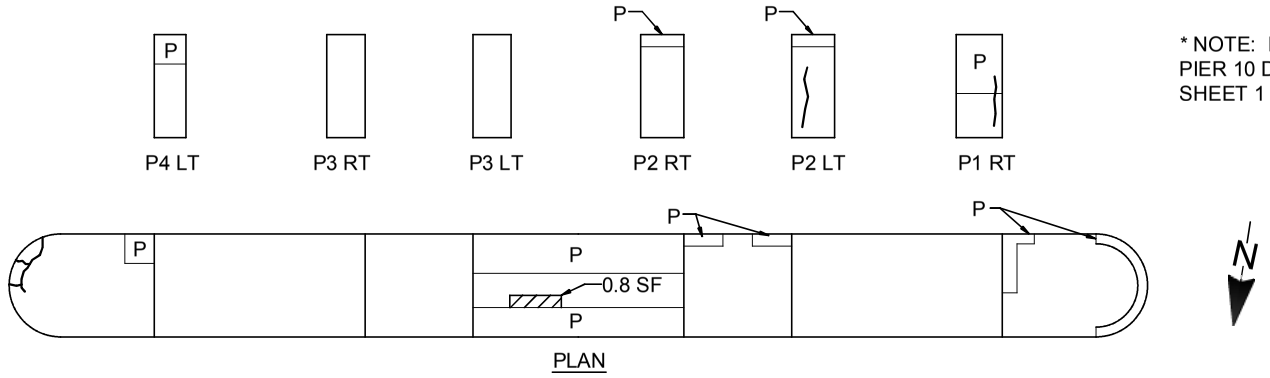

PLAN

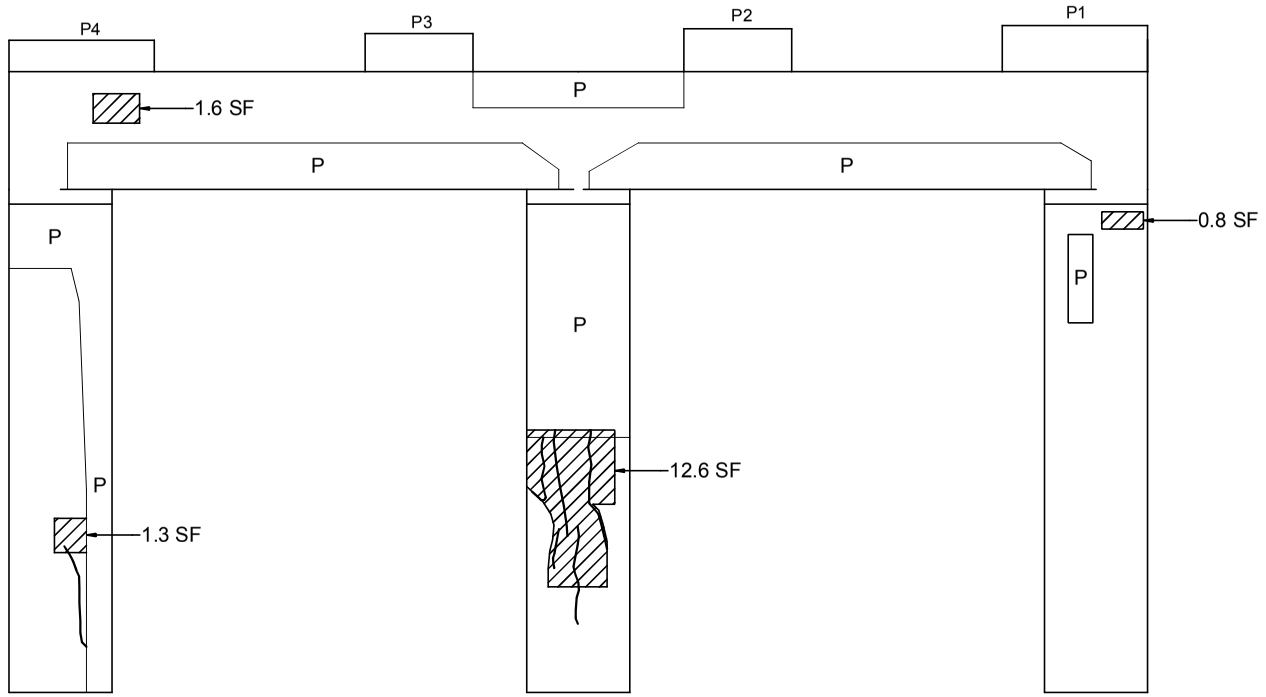

PIER 10 END ELEVATION

* NOTE: P1 LT & P4 RT VIEWS LOCATED ON PIER 10 DETERIORATION SKETCH SHEET 1 OF 2

TOTAL DAMAGED AREA EQUALS 27.5 SF
WHICH IS 2.1% OF PIER SURFACE

LEGEND
Hollow Concrete (HC)
Spall (S)
P Patch
Crack (C)
Hairline Crack (HL)

BIN: 1093571
I481 SB / CSX TRANS/AMTRAK

PIER 11 DETERIORATION SKETCH

NOT TO SCALE

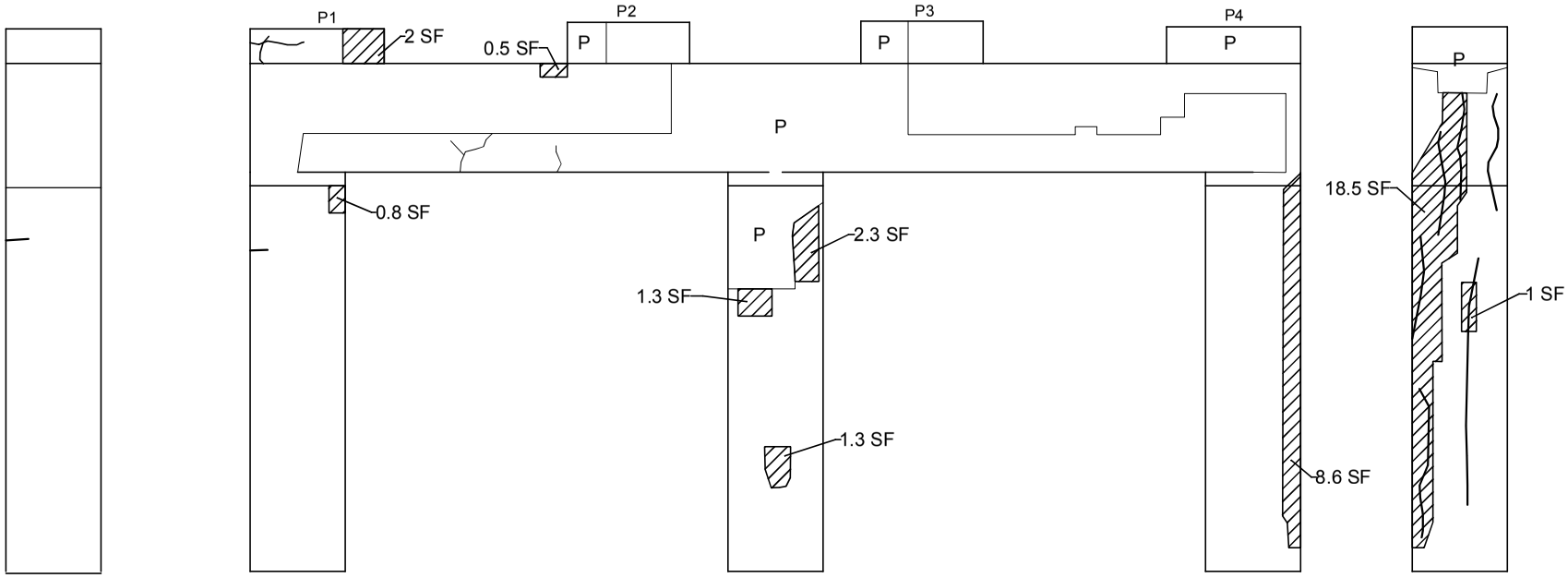

COL. 1 LT

COL. 3 RT

PIER 11 BEGIN ELEVATION

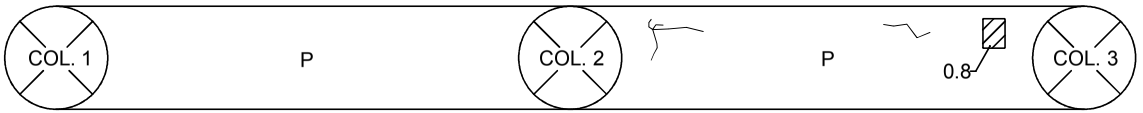

UNDERSIDE OF CAPBEAM

TOTAL DAMAGED AREA EQUALS 48.1 SF WHICH IS 4.25% OF PIER SURFACE

LEGEND
Hollow Concrete (HC)
Spall (S)
P Patch
Crack (C)
Hairline Crack (HL)

BIN: 1093571
I481 SB / CSX TRANS/AMTRAK

PIER 11 DETERIORATION SKETCH

NOT TO SCALE

* NOTE: P1 LT & P4 RT VIEWS LOCATED ON PIER 11 DETERIORATION SKETCH SHEET 1 OF 2

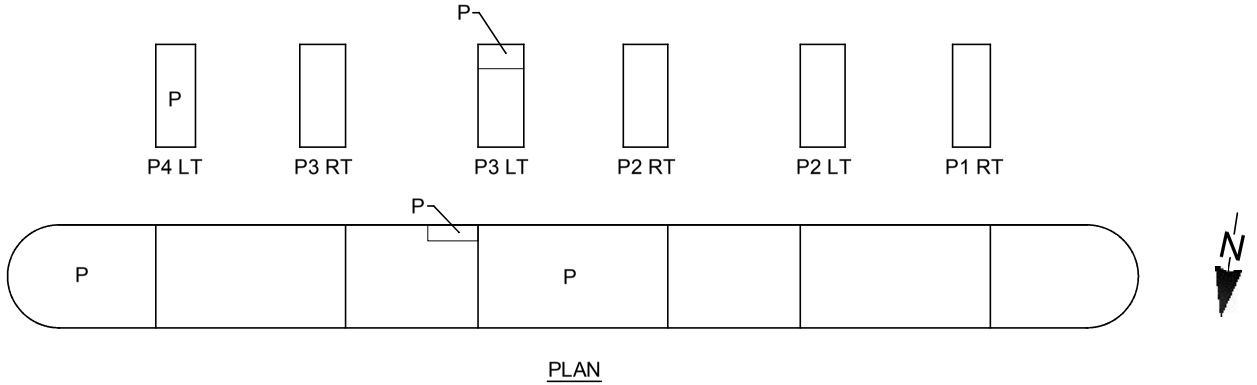

PLAN

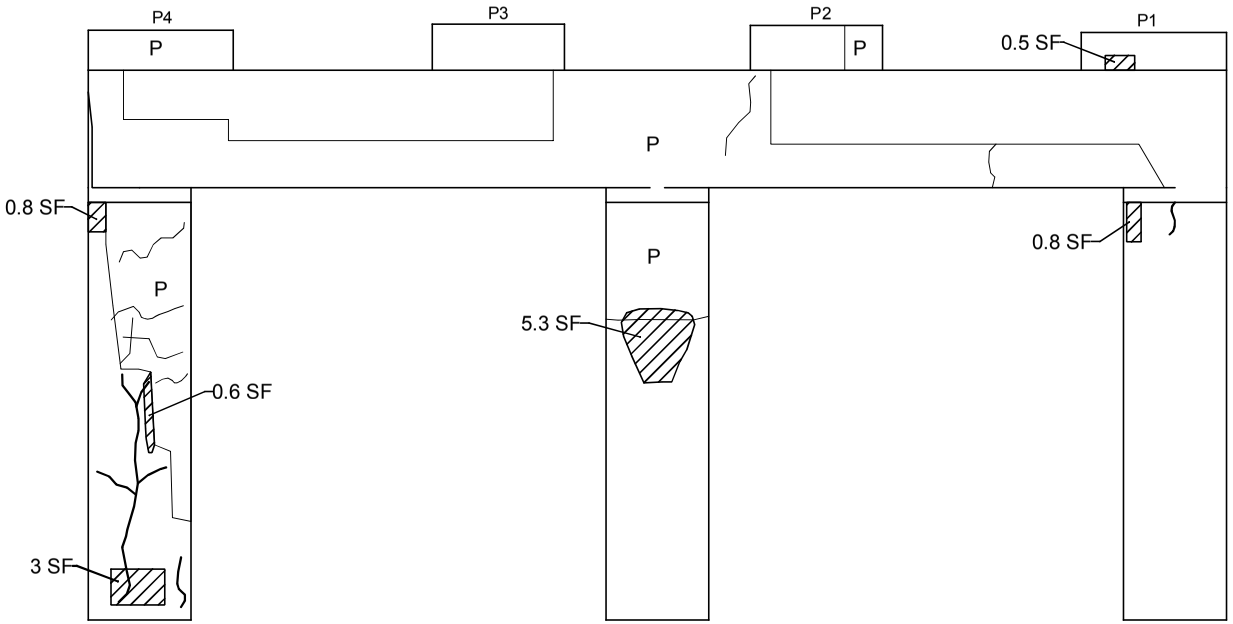

PIER 11 END ELEVATION

TOTAL DAMAGED AREA EQUALS 48.1 SF WHICH IS 4.25% OF PIER SURFACE

LEGEND
Hollow Concrete (HC)
Spall (S)
P Patch
Crack (C)
Hairline Crack (HL)

BIN: 1093571
I481 SB / CSX TRANS/AMTRAK

PIER 12 DETERIORATION SKETCH

NOT TO SCALE

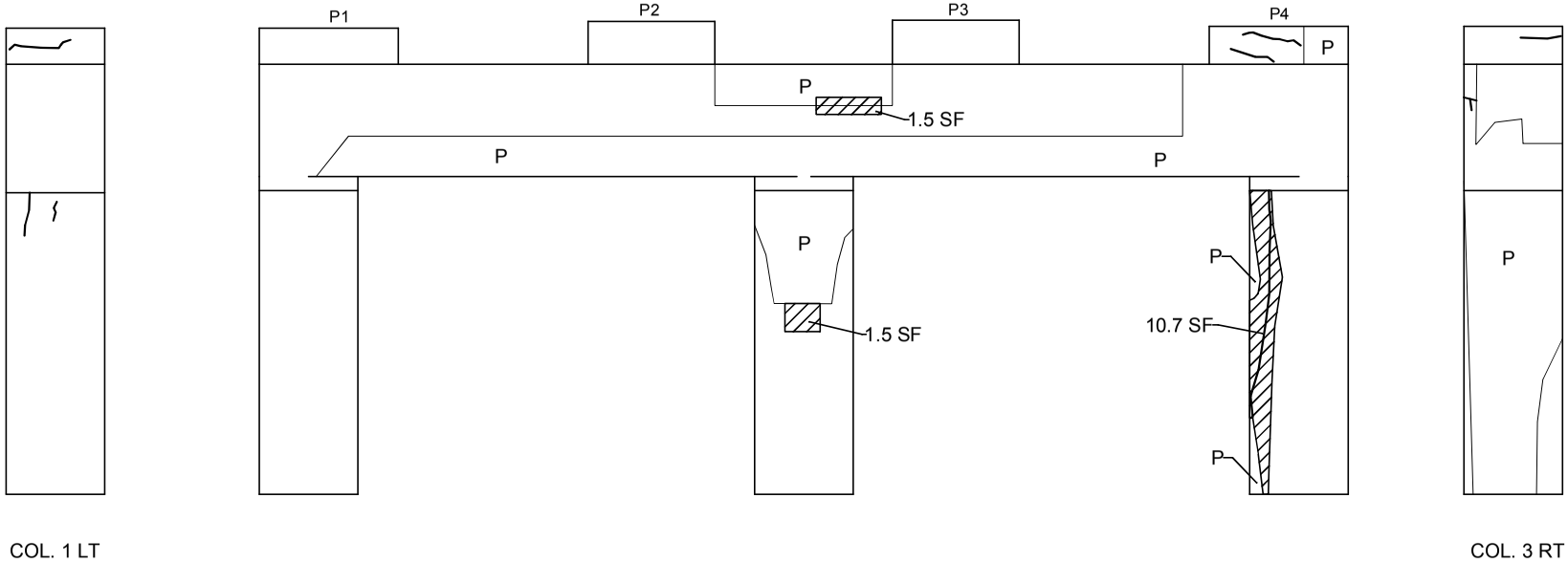

COL. 1 LT

COL. 3 RT

PIER 12 BEGIN ELEVATION

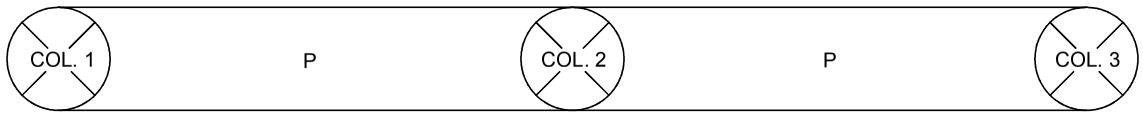

UNDERSIDE OF CAPBEAM

TOTAL DAMAGED AREA EQUALS 27.7 SF WHICH IS 2.7% OF PIER SURFACE

LEGEND
Hollow Concrete (HC)
Spall (S)
P Patch
Crack (C)
Hairline Crack (HL)

BIN: 1093571
I481 SB / CSX TRANS/AMTRAK

PIER 12 DETERIORATION SKETCH

NOT TO SCALE

* NOTE: P1 LT & P4 RT VIEWS LOCATED ON PIER 12 DETERIORATION SKETCH SHEET 1 OF 2

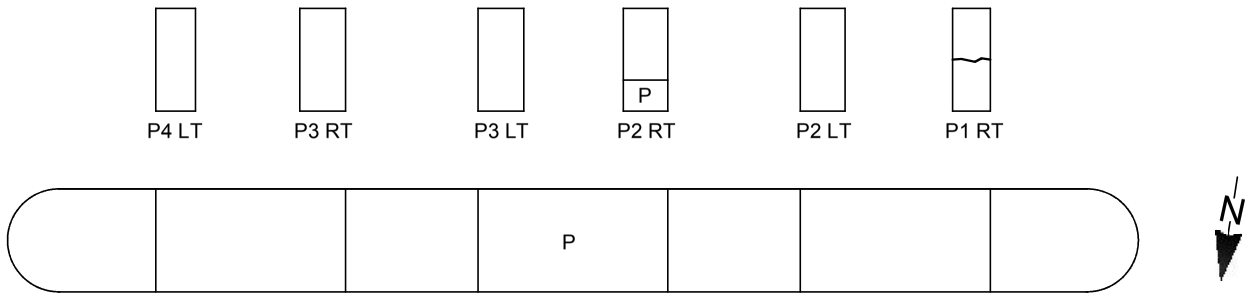

PLAN

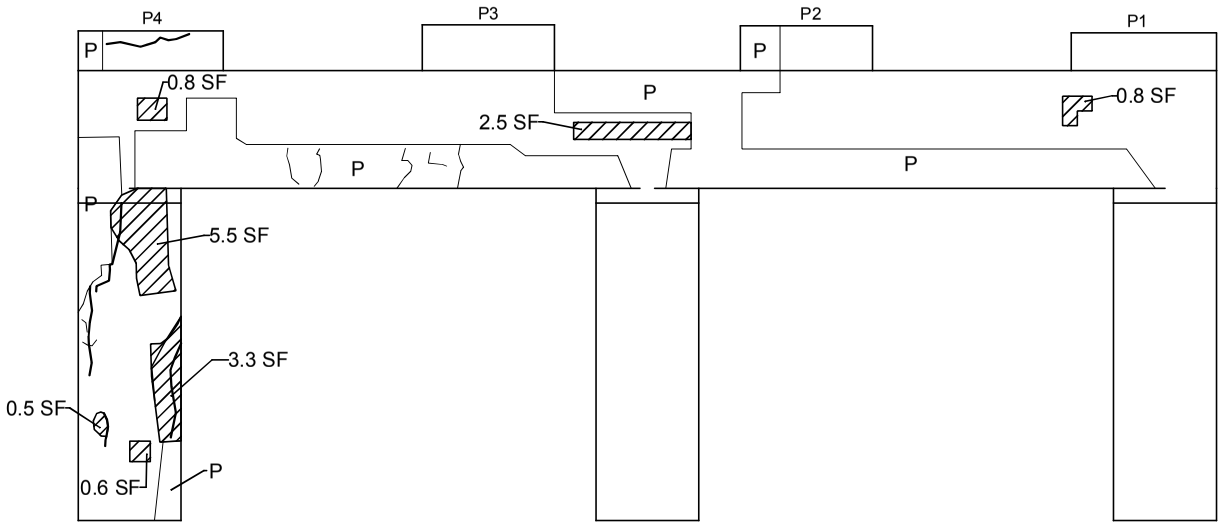

PIER 12 END ELEVATION

TOTAL DAMAGED AREA EQUALS 27.7 SF WHICH IS 2.7% OF PIER SURFACE

LEGEND

- Hollow Concrete (HC)
- Spall (S)
- P — Patch
- Crack (C)
- Hairline Crack (HL)

BIN: 1093571
I481 SB / CSX TRANS/AMTRAK

PIER 13 DETERIORATION SKETCH

NOT TO SCALE

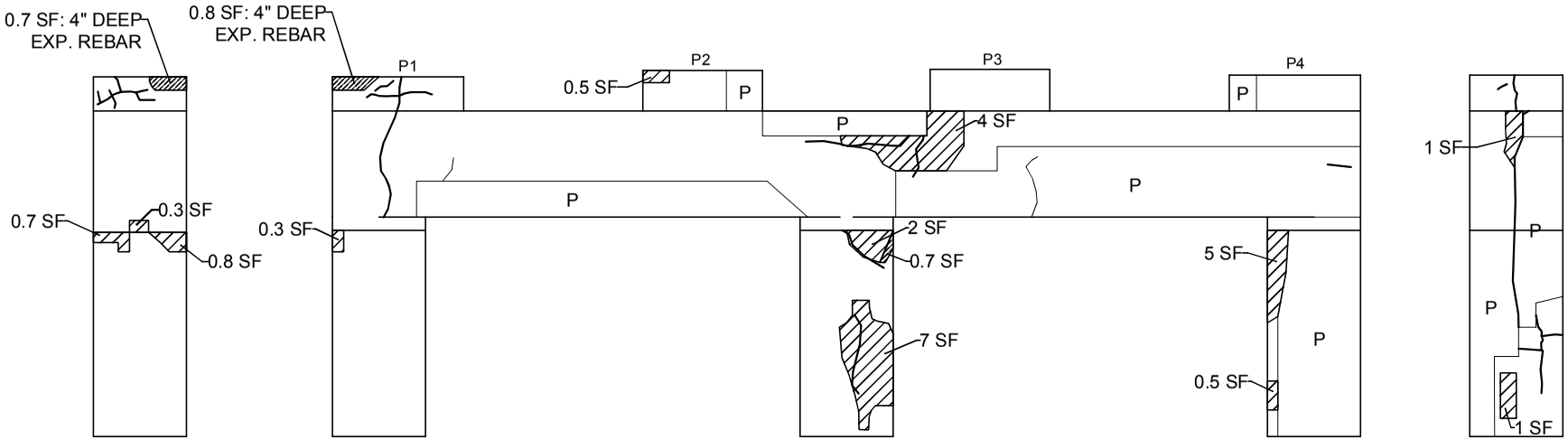

COL. 1 LT

COL. 3 RT

PIER 13 BEGIN ELEVATION

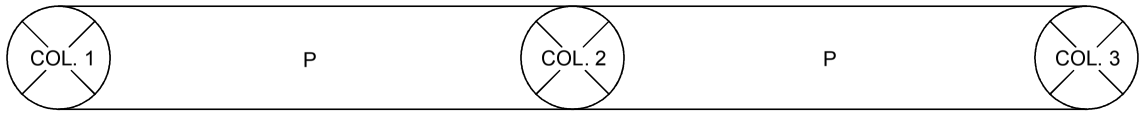

UNDERSIDE OF CAPBEAM

TOTAL DAMAGED AREA EQUALS 47.5 SF WHICH IS 5.2% OF PIER SURFACE

LEGEND
Hollow Concrete (HC)
Spall (S)
P Patch
Crack (C)
Hairline Crack (HL)

BIN: 1093571
I481 SB / CSX TRANS/AMTRAK

PIER 13 DETERIORATION SKETCH

NOT TO SCALE

* NOTE: P1 LT & P4 RT VIEWS LOCATED ON PIER 13 DETERIORATION SKETCH SHEET 1 OF 2

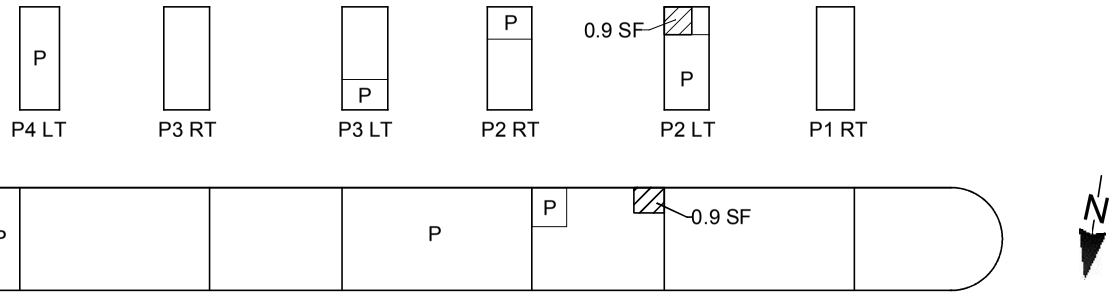

PLAN

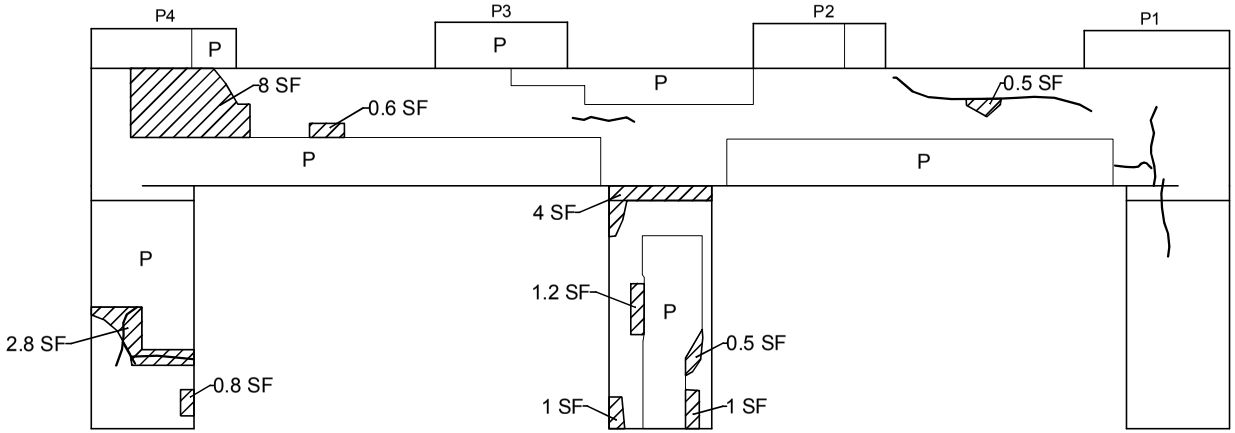

PIER 13 END ELEVATION

TOTAL DAMAGED AREA EQUALS 47.5 SF WHICH IS 5.2% OF PIER SURFACE

LEGEND	
	Hollow Concrete (HC)
	Spall (S)
P	Patch
	Crack (C)
	Hairline Crack (HL)

BIN: 1093571
I481 SB / CSX TRANS/AMTRAK

PIER 14 DETERIORATION SKETCH

NOT TO SCALE

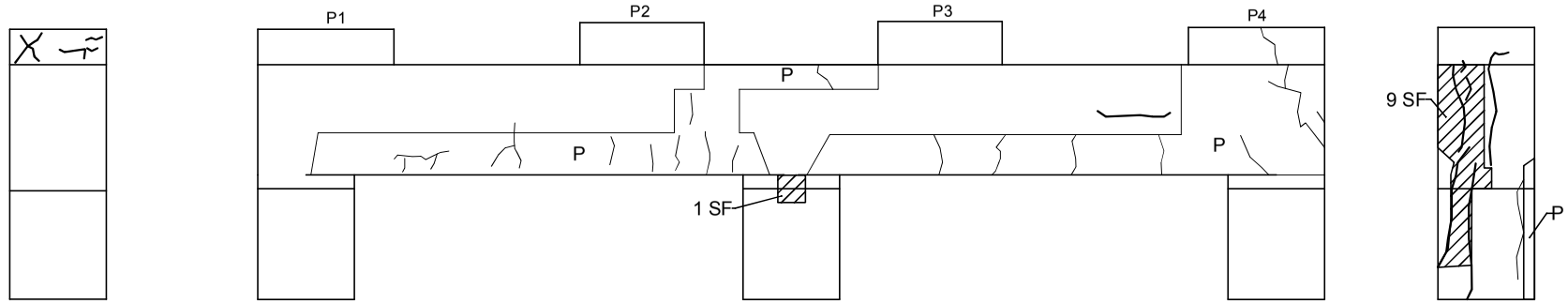

COL. 1 LT

COL. 3 RT

PIER 14 BEGIN ELEVATION

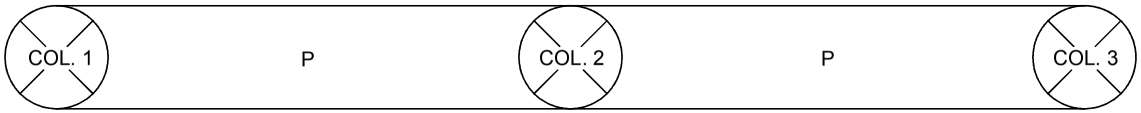

UNDERSIDE OF CAPBEAM

TOTAL DAMAGED AREA EQUALS 20.8 SF WHICH IS 2.6% OF PIER SURFACE

LEGEND
Hollow Concrete (HC)
Spall (S)
P — Patch
Crack (C)
Hairline Crack (HL)

BIN: 1093571
I481 SB / CSX TRANS/AMTRAK

PIER 14 DETERIORATION SKETCH

NOT TO SCALE

* NOTE: P1 LT & P4 RT VIEWS LOCATED ON PIER 14 DETERIORATION SKETCH SHEET 1 OF 2

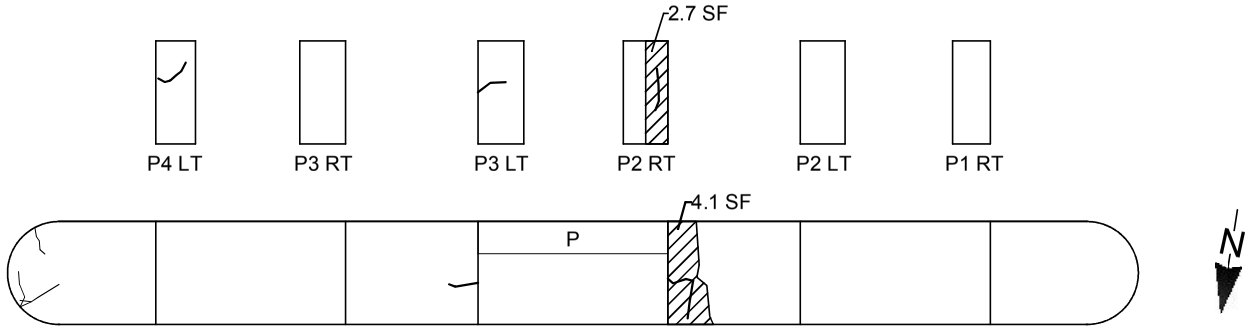

PLAN

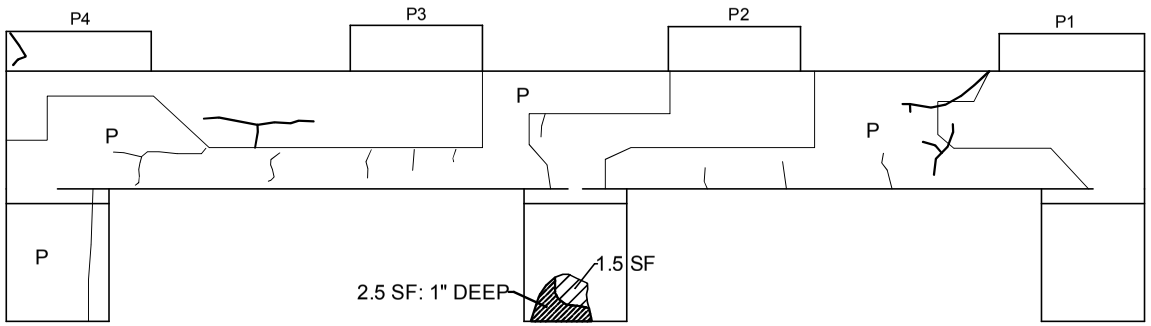

PIER 14 END ELEVATION

TOTAL DAMAGED AREA EQUALS 20.8 SF WHICH IS 2.6% OF PIER SURFACE

LEGEND
Hollow Concrete (HC)
Spall (S)
P Patch
Crack (C)
Hairline Crack (HL)

IN-DEPTH PHOTO DOCUMENTATION

BIN: 1093571
I481 SB / CSX TRANS/AMTRAK

IN DEPTH INSPECTION
PHOTO LOCATION SKETCH

NOT TO SCALE

DATE: 03/27/2014

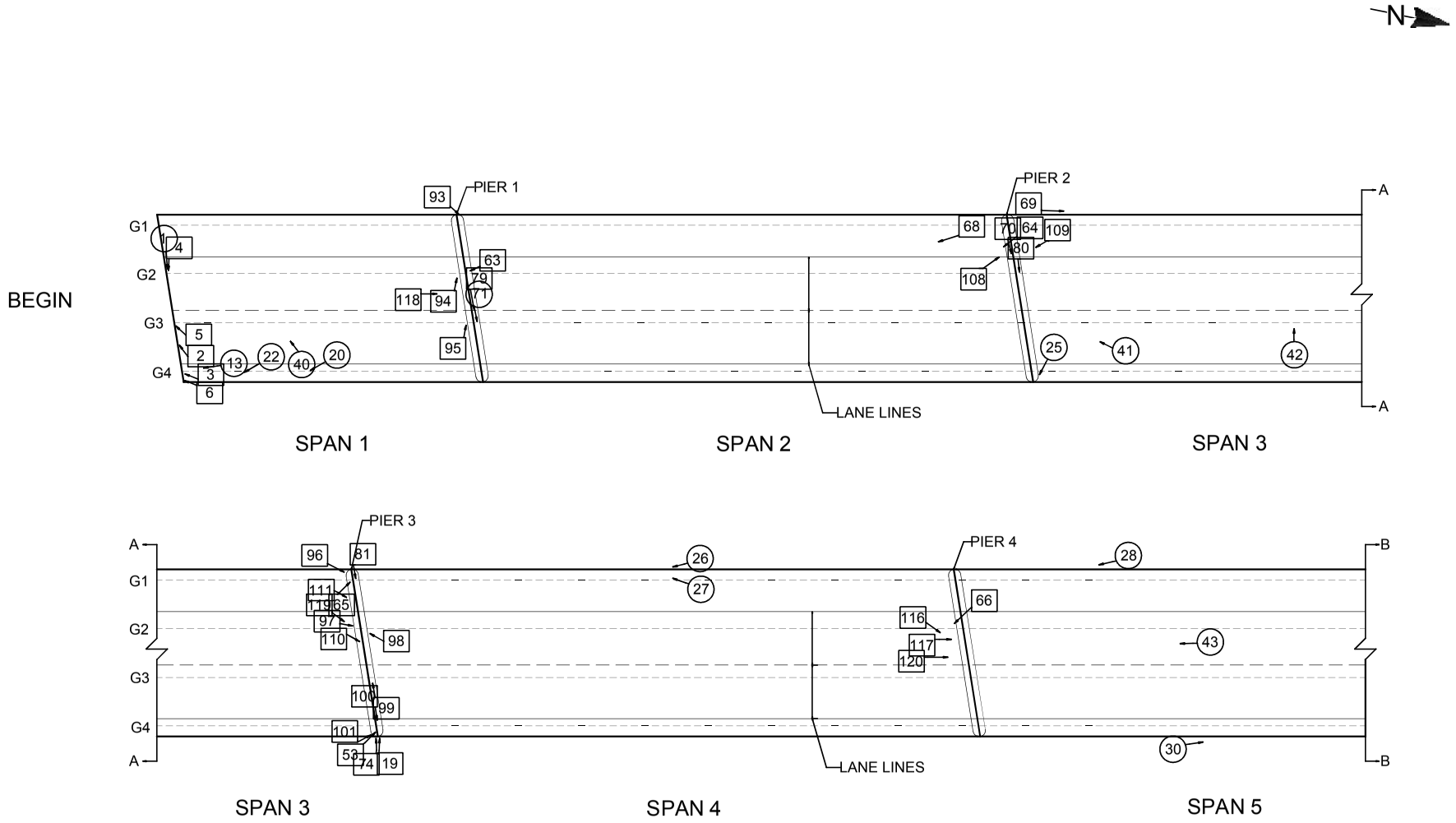

LEGEND	
XX	Photo Above Deck
XX	Photo Below Deck

BIN: 1093571
I481 SB / CSX TRANS/AMTRAK

IN DEPTH INSPECTION
PHOTO LOCATION SKETCH

NOT TO SCALE

DATE: 03/27/2014

N

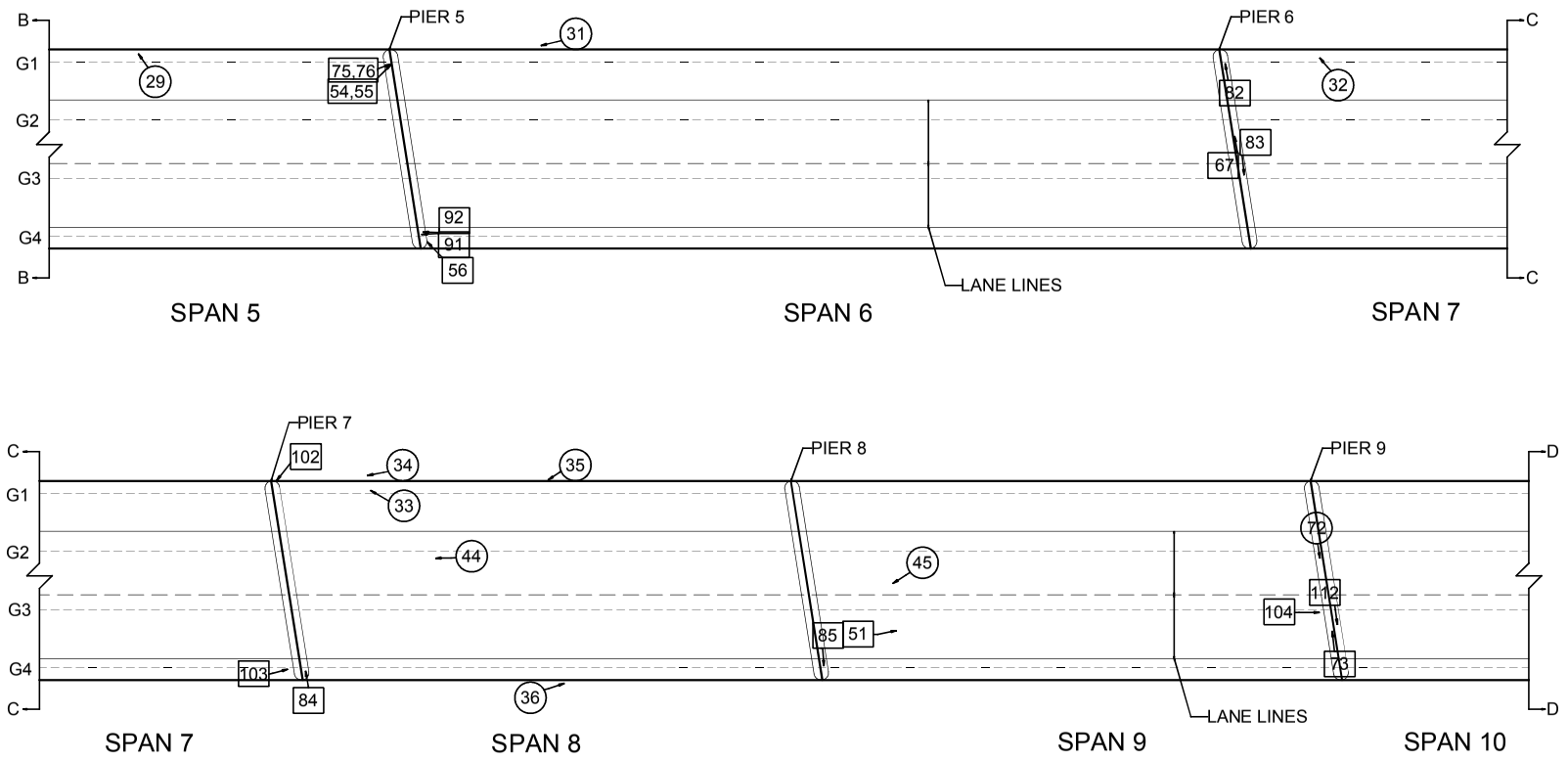

LEGEND	
(XX)	Photo Above Deck
[XX]	Photo Below Deck

BIN: 1093571
I481 SB / CSX TRANS/AMTRAK

IN DEPTH INSPECTION
PHOTO LOCATION SKETCH

NOT TO SCALE

DATE: 03/27/2014
SHEET 3 OF 3

N

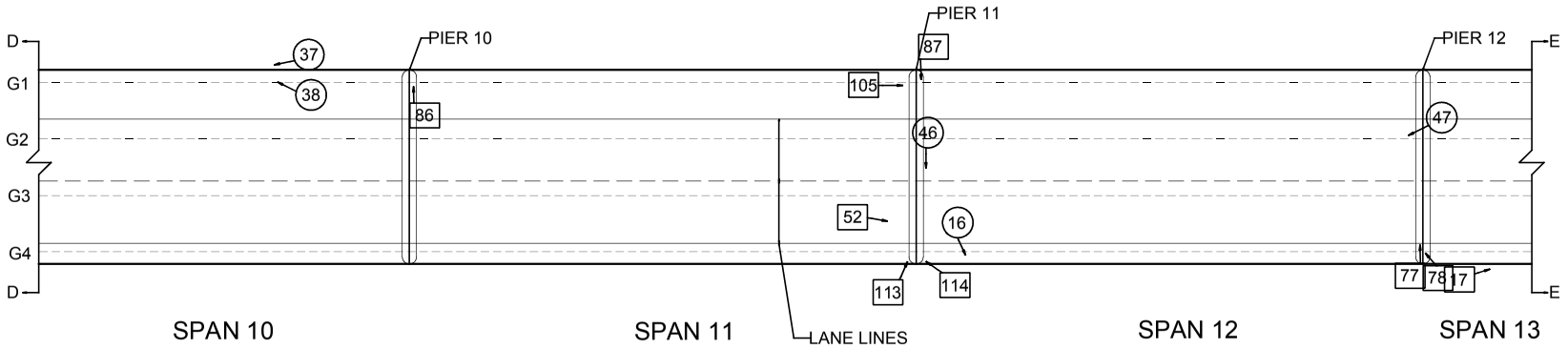

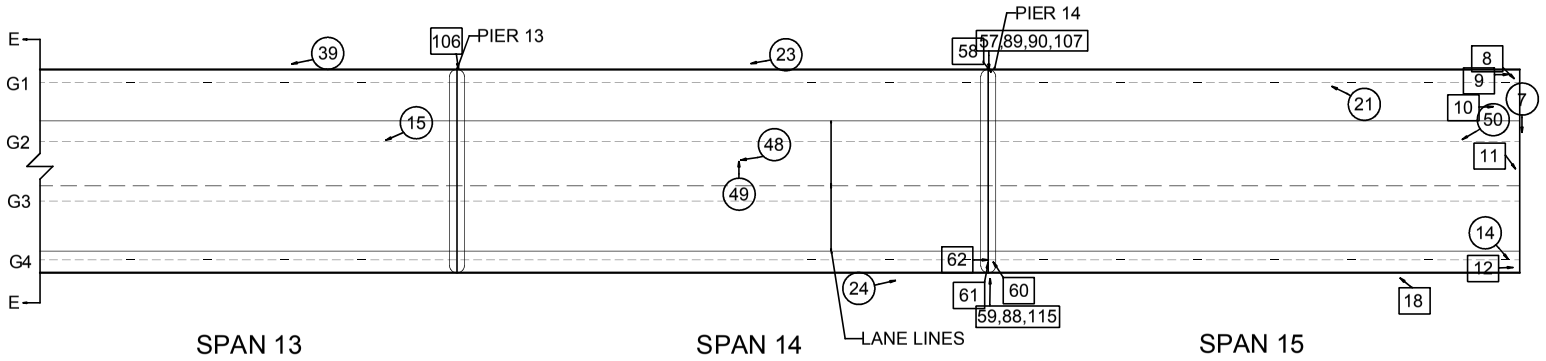

LEGEND	
XX	Photo Above Deck
XX	Photo Below Deck



DESCRIPTION: BEGIN ABUTMENT JOINT WITH DECK – LOOKING FROM LEFT TO RIGHT

PHOTO 1



DESCRIPTION: BEGIN ABUTMENT JOINT WITH DECK GIRDER BAY 3 – LOOKING FROM RIGHT TO LEFT

PHOTO 2



DESCRIPTION: BEGIN ABUTMENT BEARING B4 RIGHT SIDE – LOOKING FROM RIGHT TO LEFT

PHOTO 3



DESCRIPTION: BEGIN ABUTMENT BEARING B2 LEFT SIDE – LOOKING FROM LEFT TO RIGHT

PHOTO 4



DESCRIPTION: BEGIN ABUTMENT PEDESTAL P3 RIGHT SIDE – LOOKING FROM RIGHT TO LEFT

PHOTO 5



DESCRIPTION: BEGIN ABUTMENT BACKWALL RIGHT SIDE

PHOTO 6



DESCRIPTION: END ABUTMENT JOINT WITH DECK – LOOKING FROM LEFT TO RIGHT

PHOTO 7



DESCRIPTION: END ABUTMENT PEDESTAL P1 LEFT SIDE – LOOKING FROM LEFT TO RIGHT

PHOTO 8



DESCRIPTION: END ABUTMENT BACKWALL LEFT SIDE – LOOKING FROM BEGIN TO END

PHOTO 9



DESCRIPTION: END ABUTMENT BACKWALL BAY 1 – LOOKING FROM BEGIN TO END

PHOTO 10



DESCRIPTION: END ABUTMENT BACKWALL BAY 2 – LOOKING FROM LEFT TO RIGHT

PHOTO 11



DESCRIPTION: END ABUTMENT BACKWALL RIGHT SIDE – LOOKING FROM BEGIN TO END

PHOTO 12



DESCRIPTION: BEGIN RIGHT SHOULDER – LOOKING FROM END TO BEGIN

PHOTO 13



DESCRIPTION: END RIGHT SHOULDER – LOOKING FROM LEFT TO RIGHT

PHOTO 14



DESCRIPTION: WEARING SURFACE SPAN 13 AT END – LOOKING FROM END TO BEGIN

PHOTO 15



DESCRIPTION: SPAN 12 CURB NEAR BEGIN RIGHT – LOOKING FROM BEGIN TO END

PHOTO 16



DESCRIPTION: SPAN 13 FASCIA RIGHT – LOOKING FROM BEGIN TO END

PHOTO 17



DESCRIPTION: SPAN 15 FASCIA RIGHT – LOOKING FROM END TO BEGIN

PHOTO 18



DESCRIPTION: SPAN 4 FASCIA RIGHT AT BEGIN – LOOKING FROM RIGHT TO LEFT

PHOTO 19



DESCRIPTION: SPAN 1 PARAPET RIGHT AT MIDSPAN – LOOKING FROM END TO BEGIN

PHOTO 20



DESCRIPTION: SPAN 15 PARAPET LEFT AT MIDSPAN – LOOKING FROM END TO BEGIN

PHOTO 21



DESCRIPTION: SPAN 1 PARAPET RIGHT NEAR BEGIN – LOOKING FROM END TO BEGIN

PHOTO 22



DESCRIPTION: SPAN 14 PARAPET LEFT NEAR MIDSPAN – LOOKING FROM END TO BEGIN

PHOTO 23



DESCRIPTION: SPAN 14 PARAPET RIGHT NEAR END – LOOKING FROM BEGIN TO END

PHOTO 24



DESCRIPTION: SPAN 2 PARAPET RIGHT AT BEGIN – LOOKING FROM END TO BEGIN

PHOTO 25



DESCRIPTION: SPAN 4 PARAPET LEFT AT MIDSPAN – LOOKING FROM END TO BEGIN

PHOTO 26



DESCRIPTION: SPAN 4 PARAPET LEFT AT MIDSPAN – LOOKING FROM END TO BEGIN

PHOTO 27



DESCRIPTION: SPAN 5 PARAPET LEFT AT ¼ SPAN – LOOKING FROM END TO BEGIN

PHOTO 28



DESCRIPTION: SPAN 5 PARAPET LEFT AT 2/3 SPAN – LOOKING FROM END TO BEGIN

PHOTO 29



DESCRIPTION: SPAN 5 PARAPET RIGHT AT 1/3 SPAN – LOOKING FROM BEGIN TO END

PHOTO 30



DESCRIPTION: SPAN 6 PARAPET LEFT AT BEGIN ¼ SPAN – LOOKING FROM END TO BEGIN

PHOTO 31



DESCRIPTION: SPAN 7 LEFT AT ¼ SPAN – LOOKING FROM END TO BEGIN

PHOTO 32



DESCRIPTION: SPAN 8 PARAPET LEFT AT ¼ SPAN – LOOKING FROM END TO BEGIN

PHOTO 33



DESCRIPTION: SPAN 8 PARAPET LEFT AT ¼ SPAN – LOOKING FROM END TO BEGIN

PHOTO 34



DESCRIPTION: SPAN 8 LEFT AT MIDSPAN – LOOKING FROM END TO BEGIN

PHOTO 35



DESCRIPTION: SPAN 8 PARAPET RIGHT AT MIDSPAN – LOOKING FROM BEGIN TO END

PHOTO 36



DESCRIPTION: SPAN 10 PARAPET LEFT AT END – LOOKING FROM END TO BEGIN

PHOTO 37



DESCRIPTION: SPAN 10 PARAPET LEFT AT END – LOOKING FROM END TO BEGIN

PHOTO 38



DESCRIPTION: SPAN 13 PARAPET LEFT AT MIDSPAN – LOOKING FROM END TO BEGIN

PHOTO 39



DESCRIPTION: SPAN 1 DECK RIGHT LANE AT MIDSPAN – LOOKING FROM RIGHT TO LEFT

PHOTO 40



DESCRIPTION: SPAN 3 DECK RIGHT LANE AT ¼ SPAN – LOOKING FROM RIGHT TO LEFT

PHOTO 41



DESCRIPTION: SPAN 3 DECK RIGHT LANE AT MIDSPAN – LOOKING FROM RIGHT TO LEFT

PHOTO 42



DESCRIPTION: SPAN 5 DECK LEFT LANE BEGIN AT ¼ SPAN – LOOKING FROM END TO BEGIN

PHOTO 43



DESCRIPTION: SPAN 8 DECK LEFT LANE NEAR MIDSPAN – LOOKING FROM END TO BEGIN

PHOTO 44



DESCRIPTION: SPAN 9 DECK LEFT LANE NEAR BEGIN – LOOKING FROM LEFT TO RIGHT

PHOTO 45



DESCRIPTION: SPAN 12 DECK LEFT LANE AT BEGIN – LOOKING FROM LEFT TO RIGHT

PHOTO 46



DESCRIPTION: SPAN 12 DECK LEFT LANE AT END – LOOKING FROM END TO BEGIN

PHOTO 47



DESCRIPTION: SPAN 14 DECK LEFT LANE AT MIDSPAN – LOOKING FROM END TO BEGIN

PHOTO 48



DESCRIPTION: SPAN 14 DECK LEFT LANE AT MIDSPAN – LOOKING FROM END TO BEGIN

PHOTO 49



DESCRIPTION: SPAN 15 DECK LEFT LANE AT END – LOOKING FROM END TO BEGIN

PHOTO 50



DESCRIPTION: SPAN 9 BAY 3 AT BEGIN – LOOKING FROM BEGIN TO END

PHOTO 51



DESCRIPTION: SPAN 11 DECK BAY 3 AT END – LOOKING FROM BEGIN TO END

PHOTO 52



DESCRIPTION: SPAN 3 GIRDER G4 END RIGHT – LOOKING FROM BEGIN TO END

PHOTO 53



DESCRIPTION: SPAN 5 GIRDER G1 AT END RIGHT – LOOKING FROM BEGIN TO END

PHOTO 54



DESCRIPTION: SPAN 5 GIRDER G1 AT END RIGHT – CLOSE UP

PHOTO 55



DESCRIPTION: SPAN 6 GIRDER G4 AT BEGIN RIGHT – LOOKING FROM END TO BEGIN

PHOTO 56



DESCRIPTION: SPAN 14 GIRDER G1 END LEFT SPAN 15 BEGIN LEFT – LOOKING FROM LEFT TO RIGHT

PHOTO 57



DESCRIPTION: SPAN 15 GIRDER G1 AT BEGIN LEFT – LOOKING FROM BEGIN TO END

PHOTO 58



DESCRIPTION: SPAN 15 GIRDER G4 AT BEGIN RIGHT – LOOKING FROM RIGHT TO LEFT

PHOTO 59



DESCRIPTION: SPAN 15 GIRDER G4 AT BEGIN RIGHT CLOSE UP – LOOKING FROM RIGHT TO LEFT

PHOTO 60



DESCRIPTION: SPAN 15 G4 AT BEGIN RIGHT CLOSE UP – LOOKING FROM RIGHT TO LEFT

PHOTO 61



DESCRIPTION: SPAN 15 G4 AT BEGIN RIGHT CLOSE UP – LOOKING FROM BEGIN TO END

PHOTO 62



DESCRIPTION: SPAN 2 GIRDER G2 LEFT SIDE GUSSET AT BEGIN – LOOKING FROM END TO BEGIN

PHOTO 63



DESCRIPTION: SPAN 2 GIRDER G2 GUSSET AT END LEFT – LOOKING FROM END TO BEGIN

PHOTO 64



DESCRIPTION: SPAN 3 GIRDER G1 GUSSET AT END LEFT – LOOKING FROM BEGIN TO END

PHOTO 65

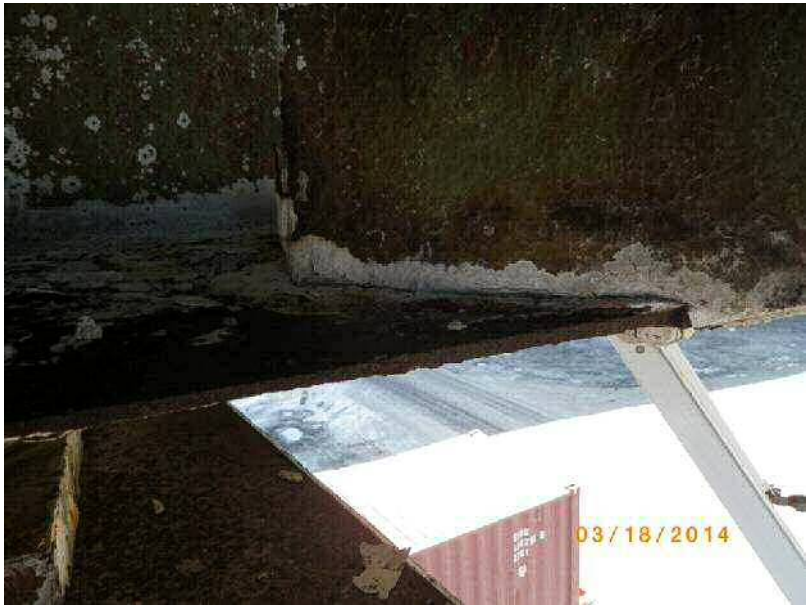

DESCRIPTION: SPAN 4 GIRDER G2 AT END LEFT – LOOKING FROM LEFT TO RIGHT

PHOTO 66



DESCRIPTION: SPAN 7 GIRDER BAY 2 BEGIN DIAPHRAGM – LOOKING FROM RIGHT TO LEFT

PHOTO 67



DESCRIPTION: FRAMING SPAN 2 BAY 1 – LOOKING FROM END TO BEGIN

PHOTO 68



DESCRIPTION: GIRDER G1 LEFT SIDE AT BEGIN – LOOKING FROM BEGIN TO END

PHOTO 69



DESCRIPTION: SPAN 2 JOINT AT PIER P2 – LOOKING FROM LEFT TO RIGHT

PHOTO 70



DESCRIPTION: SPAN 1 JOINT RIGHT LANE END SIDE HEADER – LOOKING FROM LEFT TO RIGHT

PHOTO 71



DESCRIPTION: SPAN 9 JOINT RIGHT LANE END SIDE HEADER – LOOKING FROM LEFT TO RIGHT

PHOTO 72



DESCRIPTION: SPAN 9 JOINT GUTTER – LOOKING FROM RIGHT TO LEFT

PHOTO 73



DESCRIPTION: SPAN 3 JOINT GUTTER – LOOKING FROM RIGHT TO LEFT

PHOTO 74



DESCRIPTION: SPAN 5 JOINT GUTTER LEFT SIDE – LOOKING FROM BEGIN TO END

PHOTO 75



DESCRIPTION: PIER 5 PEDESTAL P1 RIGHT SIDE – LOOKING FROM BEGIN TO END

PHOTO 76



DESCRIPTION: SPAN 12 JOINT RIGHT SIDE – LOOKING FROM RIGHT TO LEFT

PHOTO 77



DESCRIPTION: PIER 12 BEARING B4 LEFT SIDE – LOOKING FROM LEFT TO RIGHT

PHOTO 78



DESCRIPTION: PIER 1 BEARING B3 LEFT SIDE – LOOKING FROM LEFT TO RIGHT

PHOTO 79



DESCRIPTION: PEIR 2 BEARING B2 LEFT SIDE – LOOKING FROM LEFT TO RIGHT

PHOTO 80



DESCRIPTION: PIER 3 BEARING B1 LEFT SIDE – LOOKING FROM LEFT TO RIGHT

PHOTO 81



DESCRIPTION: PIER 6 BEARING B1 RIGHT SIDE – LOOKING FROM RIGHT TO LEFT

PHOTO 82



DESCRIPTION: PIER 6 BEARING B3 LEFT SIDE – LOOKING FROM LEFT TO RIGHT

PHOTO 83



DESCRIPTION: PIER 7 BEARING B4 RIGHT SIDE – LOOKING FROM RIGHT TO LEFT

PHOTO 84



DESCRIPTION: PIER 8 BEARING B4 LEFT SIDE – LOOKING FROM LEFT TO RIGHT

PHOTO 85



DESCRIPTION: PIER 10 BEARING B1 RIGHT SIDE – LOOKING FROM RIGHT TO LEFT

PHOTO 86



DESCRIPTION: PIER 11 BEARING B1 LEFT SIDE – LOOKING FROM LEFT TO RIGHT

PHOTO 87



DESCRIPTION: PIER 14 BEARING B4 RIGHT SIDE – LOOKING FROM RIGHT TO LEFT

PHOTO 88



DESCRIPTION: PIER 14 BEARING B1 LEFT SIDE – LOOKING FROM LEFT TO RIGHT

PHOTO 89



DESCRIPTION: PIER 14 BEARING B1 LEFT SIDE – LOOKING FROM LEFT TO RIGHT

PHOTO 90



DESCRIPTION: PIER 5 BEARING B4 END SIDE – LOOKING FROM END TO BEGIN

PHOTO 91



DESCRIPTION: PIER 5 BEARING B4 END SIDE – LOOKING FROM END TO BEGIN

PHOTO 92



DESCRIPTION: PIER 1 PEDESTAL P1 LEFT SIDE – LOOKING FROM BEGIN TO END

PHOTO 93



DESCRIPTION: PIER 1 PEDESTAL P2 BEGIN RIGHT SIDE – LOOKING FROM RIGHT TO LEFT

PHOTO 94



DESCRIPTION: PIER 1 PEDESTAL P3 BEGIN RIGHT SIDE – LOOKING FROM RIGHT TO LEFT

PHOTO 95



DESCRIPTION: PIER 3 PEDESTAL P1 BEGIN LEFT SIDE – LOOKING FROM BEGIN TO END

PHOTO 96



DESCRIPTION: PIER 3 PEDESTAL P2 BEGIN – LOOKING FROM BEGIN TO END

PHOTO 97



DESCRIPTION: PIER 3 PEDESTAL P2 END – LOOKING FROM RIGHT TO LEFT

PHOTO 98



DESCRIPTION: PIER 3 PEDESTAL P3 RIGHT SIDE – LOOKING FROM RIGHT TO LEFT

PHOTO 99



DESCRIPTION: PIER 3 PEDESTAL P4 LEFT SIDE – LOOKING FROM LEFT TO RIGHT

PHOTO 100



DESCRIPTION: PIER 3 PEDESTAL P4 BEGIN RIGHT SIDE – LOOKING FROM BEGIN TO END

PHOTO 101



DESCRIPTION: PIER 7 PEDESTAL P1 LEFT SIDE – LOOKING FROM LEFT TO RIGHT

PHOTO 102



DESCRIPTION: PIER 7 PEDESTAL P4 BEGIN – LOOKING FROM RIGHT TO LEFT

PHOTO 103



DESCRIPTION: PIER 9 PEDESTAL P3 BEGIN – LOOKING FROM BEGIN TO END

PHOTO 104



DESCRIPTION: PIER 11 PEDESTAL P1 BEGIN – LOOKING FROM BEGIN TO END

PHOTO 105



DESCRIPTION: PIER 13 PEDESTAL P1 BEGIN LEFT SIDE – LOOKING FROM LEFT TO RIGHT

PHOTO 106



DESCRIPTION: PIER 14 PEDESTAL P1 LEFT SIDE – LOOKING FROM LEFT TO RIGHT

PHOTO 107



DESCRIPTION: PIER 2 CAPBEAM COLUMN BAY 1 – LOOKING FROM BEGIN TO END

PHOTO 108



DESCRIPTION: PIER 2 CAPBEAM COLUMN BAY 1 – LOOKING FROM END TO BEGIN

PHOTO 109



DESCRIPTION: PIER 3 CAPBEAM PEDESTAL BAY 2 BEGIN SIDE – LOOKING FROM BEGIN TO END

PHOTO 110



DESCRIPTION: PIER 3 CAPBEAM COLUMN BAY 1 – LOOKING FROM BEGIN TO END

PHOTO 111



DESCRIPTION: PIER 9 CAPBEAM COLUMN BAY 2 – LOOKING FROM LEFT TO RIGHT

PHOTO 112



DESCRIPTION: PIER 11 CAPBEAM AND COLUMN C1 RIGHT SIDE – LOOKING FROM RIGHT TO LEFT

PHOTO 113



DESCRIPTION: PIER 11 CAPBEAM END RIGHT – LOOKING FROM END TO BEGIN

PHOTO 114



DESCRIPTION: PIER 14 CAPBEAM AND COLUMN C1 RIGHT SIDE – LOOKING FROM RIGHT TO LEFT

PHOTO 115



DESCRIPTION: PIER 4 STEM BEGIN RIGHT SIDE – LOOKING FROM LEFT TO RIGHT

PHOTO 116



DESCRIPTION: PIER 4 STEM BEGIN LEFT COLUMN C2 – LOOKING FROM BEGIN TO END

PHOTO 117



DESCRIPTION: PIER 1 COLUMN C2 BEGIN SIDE – LOOKING FROM BEGIN TO END

PHOTO 118



DESCRIPTION: PIER 3 COLUMN C2 BEGIN SIDE – LOOKING FROM LEFT TO RIGHT

PHOTO 119



DESCRIPTION: PIER 4 COLUMN C2 BEGIN SIDE – LOOKING FROM BEGIN TO END

PHOTO 120

ASBESTOS SAMPLING SURVEY

Asbestos Sampling Survey

Location:

BIN 1-09357-1
Interstate Route 481 South Bound over Conrail

Prepared for:

New York State
Department of Transportation

PIN 3804.00.101

LaBella Project No. 97132

May, 1998

Table of Contents

Page

I. Project Summary 1

II. Site Description 1

III. Inspection Procedures 1

IV. Results 2

Certification 2

Figures and Table

I. Project Summary

In accordance with conditions of Term Agreement D010010, LaBella Associates, P.C. conducted an asbestos sampling survey of the Interstate Route 481 South Bound Bridge over Conrail. Based on laboratory analyses of bulk samples collected, the following materials were determined to contain asbestos:

BIN 1-09357-1 Interstate Route 481 South Bound over Conrail

Type of Material	Estimated Amount
Sheet Packing	7 Square Meters
Caulking Compound	37.4 Linear Meters

II. Site Description

The Site is located in Onondaga County, New York. For the purpose of this report, the Site consists of the Interstate Route 481 South Bound Bridge over Conrail (See attached FIGURE 1 - Site Location Map).

III. Inspection Procedures

The following procedures were used to obtain the data for this Report:

A. A review of record drawings supplied by Region 3 personnel and a visual inspection of the subject structure were conducted to identify potential visible/accessible sources of asbestos-containing materials. Observations and notes were made to provide a description of the structure, and an estimate of the approximate amount, length, or area of ACM present.

B. Physical or operational constraints which might affect the removal of the ACM were identified and reported.

C. Bulk samples of suspected ACM were collected during the site inspection of the subject structure. Samples were taken from each homogeneous area that may contain ACM.

D. Samples were submitted for analysis. Preliminary PLM analyses of NOB materials were performed by LaBella Laboratories, a NYSDOH approved laboratory, to determine the presence and percentage of asbestos in each sample. TEM analyses of NOB materials, if necessary, were performed by EMSL Analytical, Inc. or New York Testing Laboratories, Inc.

E. Lab results were used to determine the approximate location, type, and amount of the verified ACM.

F. A drawing of the structure at the Site was created, in order to show sample locations and the approximate locations and amounts of confirmed ACM observed in accessible locations.

Only accessible areas were inspected. Inaccessible areas, such as areas within the bridge or the approaches to the bridge were not included in this inspection. No investigation was conducted by LaBella Associates to determine the presence of underground utilities on or in the immediate vicinity of the Site. Actual sample locations are shown in the attached FIGURE 2. Results of bulk sample analyses are tabulated in the attached TABLE.

IV. Results

BIN 1-09357-1 Interstate Route 481 South Bound over Conrail

Sheet Packing

Asbestos-containing sheet packing is located between the tops of the abutments and the deck slab at both ends of the bridge. Most of this material is presently covered by the bridge deck, although the edges of this sheet packing are exposed and visible at various locations.

It is estimated that the total amount of this asbestos-containing sheet packing material on the bridge is approximately 7 square meters. This estimate is based on field measurements taken at the time of the site visit.

The approximate locations of this asbestos-containing sheet packing are shown in FIGURE 2.

Caulking Compound

Asbestos-containing caulking compound is located around some of the guide rail base plates on both parapets on the bridge. It is estimated that the total amount of this caulking compound is approximately 37.4 linear meters. This estimate is based on field measurements taken at the time of the site visit.

The approximate locations of this material are shown in the attached FIGURE 2. Analytical results of bulk samples collected are summarized in the attached TABLE.

Certification

LaBella Associates, P.C. certifies the accuracy of this report, to the best of our knowledge, based on the information collected as described in the Inspection Procedures Section of this investigation.

Figures & Table

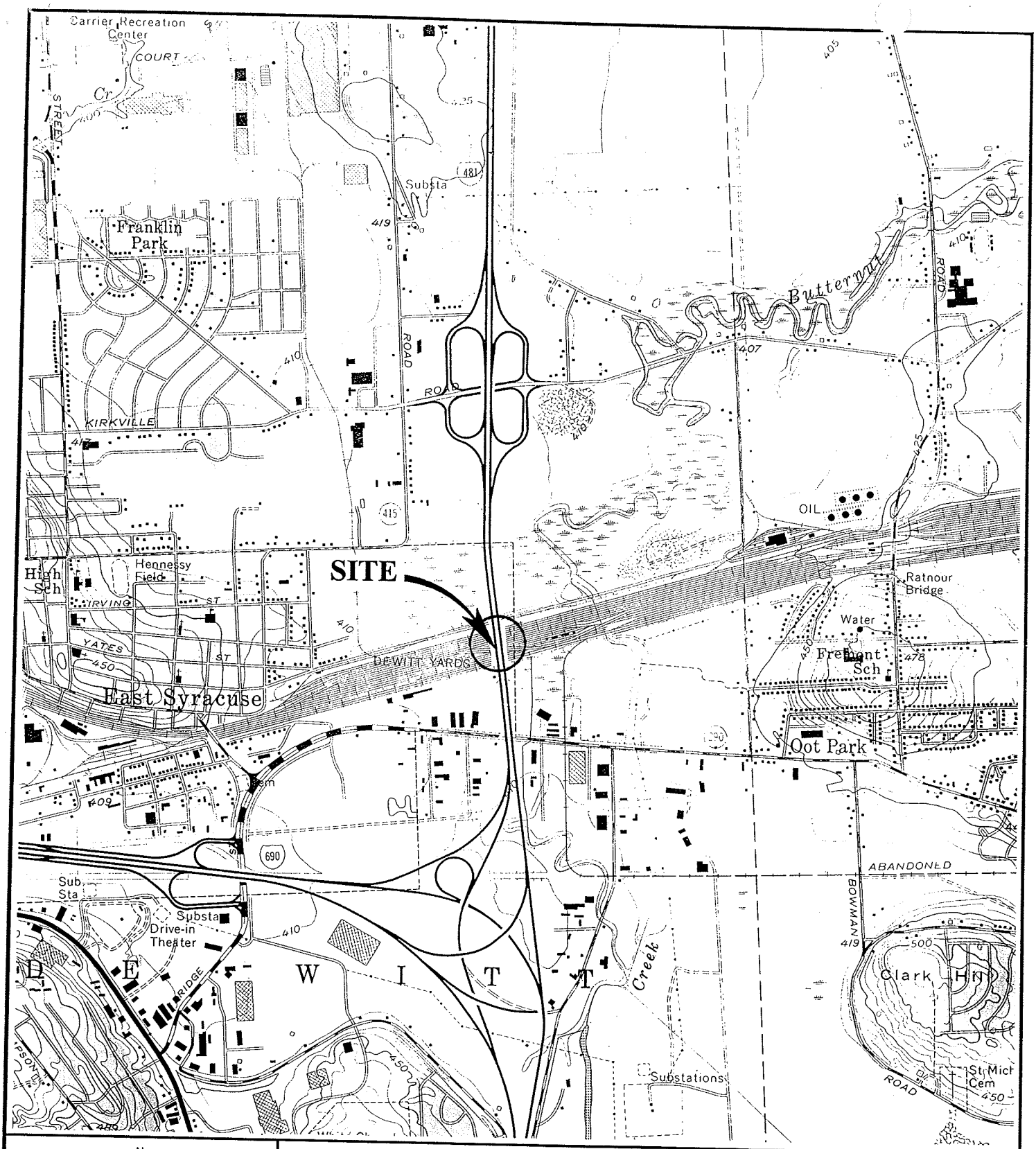

N

SCALE: 1" = 2000'

FIGURE 1
Site Location Map

I-481 SOUTH BOUND OVER CONRAIL

BIN 1-09357-1

LABELLA

PROJECT NO. 97132

NORTH ABUTMENT

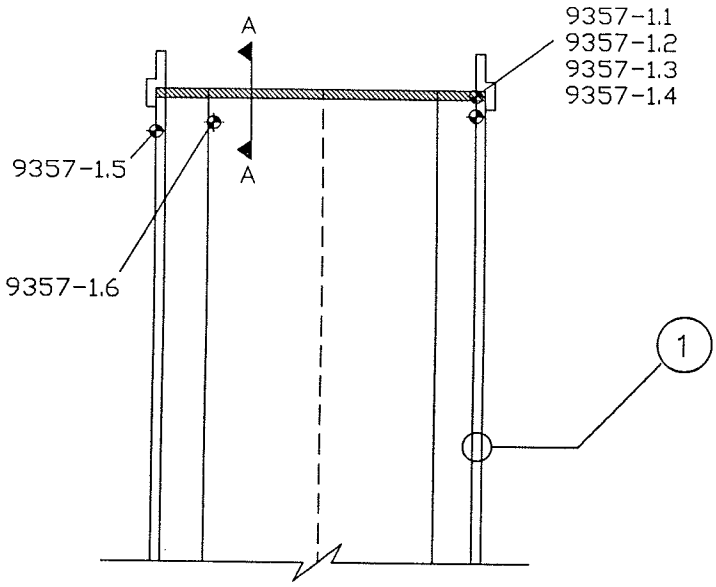

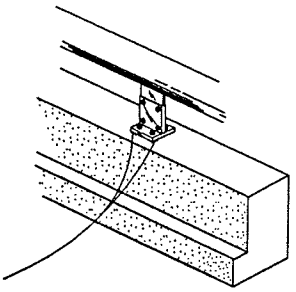

1 TYPICAL RAILING/ PARAPET DETAIL

SPOTTY APPLICATION OF ASBESTOS-CONTAINING CAULKING COMPOUND AROUND SOME GUIDE RAIL BASE PLATES

I-481 SOUTH BOUND
BIN 1-09357-1

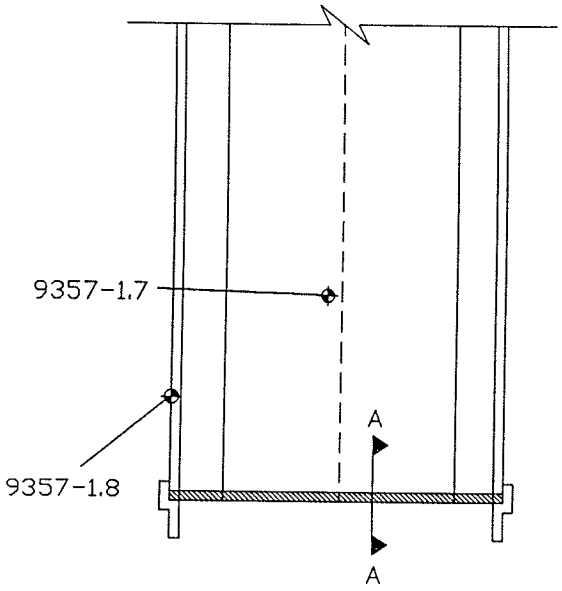

SOUTH ABUTMENT

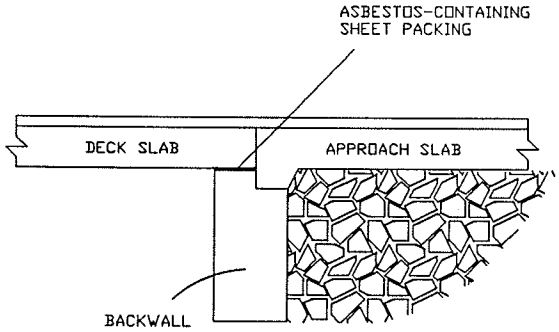

SECTION A-A

LEGEND

◆ 9357-1.1 SAMPLE LOCATION

▨ ASBESTOS-CONTAINING SHEET PACKING

NORTH

PROJECT TITLE: ASBESTOS SAMPLING SURVEY 16 BRIDGES, ONONDAGA COUNTY, NEW YORK	PROJECT NO. 97132 PIN 3804.00.101
FIGURE 2: I-481 SOUTH BOUND OVER CONRAIL BIN 1-09357-1 SAMPLE LOCATIONS AND CONFIRMED ACM	NOT TO SCALE DATE: MAY, 1998

Bulk Sample Results Table

Asbestos Sampling Survey
BIN 1-09357-1
Interstate Route 481 South Bound over Conrail
Onondaga County, New York
LaBella Project # 97132
PIN 3804.00.101

Sample #	Sample Location	Type of Material	Results % Asbestos	Amount of Material	Specification Item No.
9357-1.1	**North End of Bridge Between Deck & Abutment**	**Sheet Packing**	**40 % Chrysotile**	**7 Square Meters**	**15202.0627 (M)**
9357-1.2	North End of Bridge Between Deck & Wing Wall	Joint Filler	None Detected	N/A	N/A
9357-1.3	North End of Bridge Beneath Bearing	Bearing Pad	None Detected	N/A	N/A
9357-1.4	North End of Bridge on Abutment	Masonry Coating	None Detected	N/A	N/A
9357-1.5	North End of Bridge, on West I-Beam	Green Paint	None Detected	N/A	N/A
9357-1.6	North End of Bridge, on Inside I-Beam	Green Paint	None Detected	N/A	N/A
9357-1.7	South End of Bridge, on Ground Under 2nd Span	Green Paint	None Detected	N/A	N/A
9357-1.8	**South End of Bridge, at Base of Guide Rail**	**Gray Caulk**	**4 % Chrysotile**	**37.4 Linear Meters**	**15202.0629 (M)**

LATEST BIENNIAL INSPECTION REPORT

Inspection Date: 7/9/2013 RC: 33 BIN: 1093571

Bridge Ratings

Carried: 481I 481I33012069 Crossed: CSX TRANS/AMTRAK CheckValue: 1,864,105,860

Inspection Agency: 13 - Consultant Type of Inspection: 1 - BIENNIAL
GTMS: 302 -- Steel - Stringer/Multi-Beam or Girder
POSTINGS: See Gen Rec Page 1 for Postings at time of inspection.
Further Investigation Needed: Monitor G1 high rocker bearing on Pier 11 when very cold.
State Highway Number: 70-7 Milepoint: 7.41 AADT/Yr: 22400 / 2008
Orientation: 8 - Northwest Political Unit: 0233 - Town of DEWITT Year Built: 1972
Total Spans: 15 Ramp Bridge Attached To Span: NA BIN: NA
General Recommendation: 5 Computed Condition Rating: 4.429

Abutment Ratings:	Beg Abut	End Abut
Joint with Deck	5	8
Bearings, Bolts, Pads	6	6
Seats and Pedestals	6	6
Backwall	6	5
Stem (Breastwall)	8	8
Erosion or Scour	6	6
Footings	9	9
Piles	9	9
Recommendation	6	6

Wingwall Ratings:	Beg Abut	End Abut
Walls	5	4
Footings	9	9
Erosion or Scour	6	6
Piles	9	9

Channel Ratings:	Channel
Stream Alignment	8
Erosion and Scour	8
Waterway Opening	8
Bank Protection	8

Approach Ratings:	Approaches
Drainage	4
Embankment	6
Settlement	5
Erosion	6
Pavement	5
Guide Railing	5

Number of Flags Issued:

RED: 0 Yellow: 0 Safety: 0

Vulnerability Reviews Recommended: 1=Yes, 2=No, 3=NA, X=NotActive

Hydraulic: 3	Overload: X	Steel: 2
Collision: 2	Concrete: X	Seismic: X

Inspector's Signature: CheckValue: 1,864,105,860 Date: 7/9/2013

James W. Gorzynski,PE () (Inspector ID:3100044)

Signed copy of this inspection report is available in the appropriate NYSDOT Regional Office

Reviewed By: Date: 9/4/2013

Stephen L. Gauthier,PE () (QC ID:3100077)

Signed copy of this inspection report is available in the appropriate NYSDOT Regional Office

Inspection Date: 7/9/2013 RC: 33 BIN: 1093571

Span Ratings

Carried: 481I 481I33012069 Crossed: CSX TRANS/AMTRAK CheckValue: 1,864,105,860

Deck Element Ratings:	001	002	003	004	005	006	007	008	009	010
Wearing Surface	4	4	4	4	4	4	4	4	4	4
Curbs	8	8	8	8	8	8	8	8	8	8
Sidewalks, Fascias	4	4	4	4	4	4	4	4	4	4
Railings, Parapets	4	4	4	4	4	4	4	4	4	4
Scuppers	8	4	4	4	4	4	4	4	4	4
Gratings	8	8	8	8	8	8	8	8	8	8
Median	8	8	8	8	8	8	8	8	8	8
Mono Deck Surface	5	5	5	5	5	4	4	5	5	5

Superstructure Ratings:	001	002	003	004	005	006	007	008	009	010
Structural Deck	5	6	6	6	6	6	6	6	6	6
Primary Members	6	6	6	6	6	6	6	6	6	6
Secondary Members	6	6	4	6	6	6	6	6	6	6
Paint	4	4	4	4	4	4	4	4	4	4
Joints	4	4	4	4	4	4	4	4	4	5
Recommendation	6	6	6	6	6	6	6	6	6	6

Pier Ratings:	001	002	003	004	005	006	007	008	009	010
Bearings, Bolts, Pads	4	4	4	6	6	4	4	4	4	4
Pedestals	4	4	4	6	6	5	5	5	5	5
Top of Cap or Beam	5	5	5	6	6	5	5	5	5	5
Stem Solid Pier	8	5	5	4	8	8	8	8	8	8
Cap Beam	5	4	5	6	6	5	5	5	5	5
Pier Columns	4	5	5	5	5	5	5	5	5	5
Footings	9	9	9	9	9	9	9	9	9	9
Erosion or Scour	6	6	6	6	6	5	5	6	6	6
Piles	9	9	9	9	9	9	9	9	9	9
Recommendation	5	5	5	6	6	5	5	5	5	5

Utility Ratings:	001	002	003	004	005	006	007	008	009	010
Lighting	8	8	8	8	8	8	8	8	8	8
Sign Structure	8	8	8	8	8	8	8	8	8	8
Utilities and Support	8	8	8	8	8	8	8	8	8	8

Field Notes:

Field Date	Arrival	Departure	Temp (C)	Temp (F)	Weather Conditions
6/4/2013	8:30:00 AM	4:30:00 PM	18	65	Clear
6/5/2013	11:20:00 AM	3:50:00 PM	18	65	Cloudy
6/6/2013	8:50:00 AM	11:35:00 AM	16	60	Rain
7/9/2013	5:15:00 PM	5:50:00 PM	29	85	Fair

Inspection Date: 7/9/2013 RC: 33 BIN: 1093571

Span Ratings

Carried: 481I 481I33012069 Crossed: CSX TRANS/AMTRAK CheckValue: 1,864,105,860

Deck Element Ratings:	011	012	013	014	015
Wearing Surface	4	4	4	4	4
Curbs	8	8	8	8	8
Sidewalks, Fascias	4	4	4	4	4
Railings, Parapets	4	4	4	4	4
Scuppers	4	4	4	4	4
Gratings	8	8	8	8	8
Median	8	8	8	8	8
Mono Deck Surface	5	4	5	5	5

Superstructure Ratings:	011	012	013	014	015
Structural Deck	6	6	6	6	6
Primary Members	6	6	6	6	6
Secondary Members	6	6	6	6	6
Paint	4	4	4	4	4
Joints	5	5	5	4	8
Recommendation	6	6	6	6	6

Pier Ratings:	011	012	013	014	015
Bearings, Bolts, Pads	3	4	4	4	8
Pedestals	5	5	5	5	8
Top of Cap or Beam	5	5	5	5	8
Stem Solid Pier	8	8	8	8	8
Cap Beam	5	5	5	5	8
Pier Columns	5	5	5	5	8
Footings	9	9	9	9	8
Erosion or Scour	6	6	6	5	8
Piles	9	9	9	9	8
Recommendation	5	5	5	5	8

Utility Ratings:	011	012	013	014	015
Lighting	8	8	8	8	8
Sign Structure	8	8	8	8	8
Utilities and Support	8	8	8	8	8

Inspection Date: 7/9/2013 RC: 33 BIN: 1093571

Inspection Notes

Carried: 481I 481I33012069 Crossed: CSX TRANS/AMTRAK CheckValue: 1,864,105,860

Note ID: 3A1310935710000

Beg Abut -- Abutment: Joint with Deck -- Rated 5, Was 6
Referenced Photos: "1"
2013 - The begin abutment joint with deck header and seal are intact and in good overall condition without leakage, but the seal is partially filled with sand and roadway debris. However, the joint functions adequately.

Note ID: 3A1310935710002

Approaches: Drainage -- Rated 4, Was 4
Referenced Photos: "3"
2013 - The top of the catch basin at the right side of the end approach is completely plugged and has vegetation growing on all areas of the top grating surface. Approach drainage would otherwise rate '5'.

Note ID: 3A1310935710003

Span 001 -- Deck Elements: Wearing Surface -- Rated 4, Was 4
Span 002 -- Deck Elements: Wearing Surface -- Rated 4, Was 4
Span 003 -- Deck Elements: Wearing Surface -- Rated 4, Was 4
Span 004 -- Deck Elements: Wearing Surface -- Rated 4, Was 4
Span 005 -- Deck Elements: Wearing Surface -- Rated 4, Was 4
Span 006 -- Deck Elements: Wearing Surface -- Rated 4, Was 4
Span 007 -- Deck Elements: Wearing Surface -- Rated 4, Was 4
Span 008 -- Deck Elements: Wearing Surface -- Rated 4, Was 4
Span 009 -- Deck Elements: Wearing Surface -- Rated 4, Was 4
Span 010 -- Deck Elements: Wearing Surface -- Rated 4, Was 4
Span 011 -- Deck Elements: Wearing Surface -- Rated 4, Was 4
Span 012 -- Deck Elements: Wearing Surface -- Rated 4, Was 4
Span 013 -- Deck Elements: Wearing Surface -- Rated 4, Was 4
Span 014 -- Deck Elements: Wearing Surface -- Rated 4, Was 4
Span 015 -- Deck Elements: Wearing Surface -- Rated 4, Was 4
Referenced Photos: "38", "40"
2013 - The deck wearing surface along the wheel paths in all spans is beginning to wear smooth with a diminished depth of sawcut grooving in these areas (Photos 38 & 40). Some areas also appear to be polished.

There are also a few longitudinal cracks in the deck wearing surface scattered throughout all spans (Photos 38 & 40). The worst cracks are in Spans 6, 7 & 12.

The deck wearing surface would otherwise rate '5' or '6' in all spans.

Note ID: 3A1310935710006

Span 001 -- Deck Elements: Sidewalks, Fascias -- Rated 4, Was 4
Span 002 -- Deck Elements: Sidewalks, Fascias -- Rated 4, Was 4
Span 003 -- Deck Elements: Sidewalks, Fascias -- Rated 4, Was 4
Span 004 -- Deck Elements: Sidewalks, Fascias -- Rated 4, Was 4
Span 005 -- Deck Elements: Sidewalks, Fascias -- Rated 4, Was 4
Span 006 -- Deck Elements: Sidewalks, Fascias -- Rated 4, Was 4

Note ID: 3A1310935710006 - continued

Span 007 -- Deck Elements: Sidewalks, Fascias -- Rated 4, Was 4
Span 008 -- Deck Elements: Sidewalks, Fascias -- Rated 4, Was 4
Span 009 -- Deck Elements: Sidewalks, Fascias -- Rated 4, Was 4
Span 010 -- Deck Elements: Sidewalks, Fascias -- Rated 4, Was 4
Span 011 -- Deck Elements: Sidewalks, Fascias -- Rated 4, Was 4
Span 012 -- Deck Elements: Sidewalks, Fascias -- Rated 4, Was 4
Span 013 -- Deck Elements: Sidewalks, Fascias -- Rated 4, Was 4
Span 014 -- Deck Elements: Sidewalks, Fascias -- Rated 4, Was 4
Span 015 -- Deck Elements: Sidewalks, Fascias -- Rated 4, Was 4

Referenced Photos: "52", "16"
2013 - The right and left concrete fascias have minor to moderate horizontal hairline cracking with hollow areas, delamination and rust staining in isolated areas of all spans (Photo 52). In addition, the right fascia at the superstructure joint at Pier 3 has severe deterioration and spalling with punky concrete (Photo 16). Less severe deterioration and spalling has also developed at other superstructure joints.

The approximate 1' top portion of concrete "lip" is rated as parapet instead of fascia for purposes of this inspection.

Note ID: 3A1310935710007

Span 001 -- Deck Elements: Railings, Parapets -- Rated 4, Was 4
Span 002 -- Deck Elements: Railings, Parapets -- Rated 4, Was 4
Span 003 -- Deck Elements: Railings, Parapets -- Rated 4, Was 4
Span 004 -- Deck Elements: Railings, Parapets -- Rated 4, Was 4
Span 005 -- Deck Elements: Railings, Parapets -- Rated 4, Was 4
Span 006 -- Deck Elements: Railings, Parapets -- Rated 4, Was 4
Span 007 -- Deck Elements: Railings, Parapets -- Rated 4, Was 4
Span 008 -- Deck Elements: Railings, Parapets -- Rated 4, Was 4
Span 009 -- Deck Elements: Railings, Parapets -- Rated 4, Was 4
Span 010 -- Deck Elements: Railings, Parapets -- Rated 4, Was 4
Span 011 -- Deck Elements: Railings, Parapets -- Rated 4, Was 4
Span 012 -- Deck Elements: Railings, Parapets -- Rated 4, Was 4
Span 013 -- Deck Elements: Railings, Parapets -- Rated 4, Was 4
Span 014 -- Deck Elements: Railings, Parapets -- Rated 4, Was 4
Span 015 -- Deck Elements: Railings, Parapets -- Rated 4, Was 4

Referenced Photos: "4", "17", "27", "31", "32"
2013 - The right and left concrete parapets in all spans typically have horizontal cracks with isolated rust stains on the inside face approximately 6" below the top and in the areas surrounding previous concrete patches (Photos 4, 17 & 27). The worst area of cracking and rust staining is on the inside face near the top of the left parapet in Span 5 near midspan (Photo 31).

The top of the outside face of the right parapet in Span 5 near midspan also has an approximate 5' long by up to 3" deep area of severe spalling with exposed corroded reinforcement (Photo 32).

Inspection Date: 7/9/2013 RC: 33 BIN: 1093571

Inspection Notes

Carried: 481I 481I33012069 Crossed: CSX TRANS/AMTRAK CheckValue: 1,864,105,860

Note ID: 3A1310935710000A

Span 001 -- Superstructure: Paint -- Rated 4, Was 4
Span 002 -- Superstructure: Paint -- Rated 4, Was 4
Span 003 -- Superstructure: Paint -- Rated 4, Was 4
Span 004 -- Superstructure: Paint -- Rated 4, Was 4
Span 005 -- Superstructure: Paint -- Rated 4, Was 4
Span 006 -- Superstructure: Paint -- Rated 4, Was 4
Span 007 -- Superstructure: Paint -- Rated 4, Was 4
Span 008 -- Superstructure: Paint -- Rated 4, Was 4
Span 009 -- Superstructure: Paint -- Rated 4, Was 4
Span 010 -- Superstructure: Paint -- Rated 4, Was 4
Span 011 -- Superstructure: Paint -- Rated 4, Was 4
Span 012 -- Superstructure: Paint -- Rated 4, Was 4
Span 013 -- Superstructure: Paint -- Rated 4, Was 4
Span 014 -- Superstructure: Paint -- Rated 4, Was 4
Span 015 -- Superstructure: Paint -- Rated 4, Was 4

Referenced Photos: "21", "53", "20", "28", "45"
2013 - Exterior areas of bottom flanges of fascia girders in all spans have peeling paint with significant paint loss (Photo 53). Section loss is minimal in these areas. Remaining areas of main girders in all spans have minor paint deterioration and failure, mainly along bottom flanges (Photos 28 & 45).

Additional peeling paint and paint failure resulting in rust and corrosion have occurred on superstructure steel beneath leaky superstructure joints at most piers (Photos 20 & 21).

Note ID: 3A1310935710000B

Span 001 -- Superstructure: Joints -- Rated 4, Was 4
Span 002 -- Superstructure: Joints -- Rated 4, Was 4
Span 003 -- Superstructure: Joints -- Rated 4, Was 4
Span 004 -- Superstructure: Joints -- Rated 4, Was 4
Span 005 -- Superstructure: Joints -- Rated 4, Was 4
Span 006 -- Superstructure: Joints -- Rated 4, Was 5
Span 007 -- Superstructure: Joints -- Rated 4, Was 5
Span 008 -- Superstructure: Joints -- Rated 4, Was 5
Span 009 -- Superstructure: Joints -- Rated 4, Was 4
Span 014 -- Superstructure: Joints -- Rated 4, Was 5

Referenced Photos: "23", "46", "9", "10", "22", "34", "35", "36", "37", "39", "42", "44", "47", "51"
2013 - Open troughs at superstructure joints at Piers 1 - 5 & 9 are almost completely plugged with roadway debris that severely restricts proper drainage (Photos 23, 35 & 46). Trough support framing at these piers is intact, but with minor rust and corrosion (Photos 10 & 47).

Steel framing along finger joints at Piers 1 - 5 & 9 has minor to moderate to severe corrosion with flake rust and delamination with substantial section loss (Photos 22, 34, 35).

The tops of superstructure joints with rubber seals are partially filled with sand and roadway debris (Photo 9). The undersides of superstructure joints in Spans 6, 7, 8 & 14 have deteriorated and spalled concrete almost full length of the joints

Note ID: 3A1310935710000B - continued

(Photos 36, 37, 39, 42, 44 & 51).

Note ID: 3A1310935710000C

Span 001 -- Pier: Bearings, Bolts, Pads -- Rated 4, Was 4
Span 002 -- Pier: Bearings, Bolts, Pads -- Rated 4, Was 4
Span 003 -- Pier: Bearings, Bolts, Pads -- Rated 4, Was 4
Span 006 -- Pier: Bearings, Bolts, Pads -- Rated 4, Was 4
Span 007 -- Pier: Bearings, Bolts, Pads -- Rated 4, Was 4
Span 008 -- Pier: Bearings, Bolts, Pads -- Rated 4, Was 4
Span 009 -- Pier: Bearings, Bolts, Pads -- Rated 4, Was 4
Span 010 -- Pier: Bearings, Bolts, Pads -- Rated 4, Was 4
Span 011 -- Pier: Bearings, Bolts, Pads -- Rated 3, Was 4
Span 012 -- Pier: Bearings, Bolts, Pads -- Rated 4, Was 4
Span 013 -- Pier: Bearings, Bolts, Pads -- Rated 4, Was 4
Span 014 -- Pier: Bearings, Bolts, Pads -- Rated 4, Was 4

Referenced Photos: "5", "48", "50"
2013 - Several rocker bearings at the piers are under/over-extended for the ambient air temperature on the day of inspection (Photo 50). The worst under/over-extended high rocker bearing on any pier was the bearing supporting Girder G1 on Pier 11 (Photo 48). This bearing was under-extended by 6.67 degrees at 85 degrees Fahrenheit and was under-extended by 8.68 degrees at 60 degrees Fahrenheit (Photo 48). See the attached High Rocker Bearing Documentation Table for recorded measurements at different temperatures.

All high rocker bearings on Pier 11 were under-extended and in a contraction mode at 85 degrees Fahrenheit. The bearing supporting Girder G1 had the most severe under-extension of the remaining bearings on this pier (Photo 48). It is recommended that this bearing be monitored when the ambient air temperature is less than 10 degrees Fahrenheit during a cold period during the winter because, based on recorded measurements, substantial under-extension is likely as the temperature decreases during cold weather.

Minor to moderate pack rust has developed beneath the rockers of all high rocker bearings on all piers (Photo 5). Remaining areas of pier bearings have minor to moderate peeling paint with rust and minor corrosion (Photo 50).

Note ID: 3A1310935710000D

Span 001 -- Pier: Pedestals -- Rated 4, Was 4
Span 002 -- Pier: Pedestals -- Rated 4, Was 4
Span 003 -- Pier: Pedestals -- Rated 4, Was 4

Referenced Photos: "6", "11", "24"
2013 - The left face of Pedestal 1 on Pier 1 is hollow sounding and has cracking, efflorescence and spalling with exposed corroded reinforcement (Photo 6). The spalled area is not affecting the bearing area.

Three of four pedestals on Piers 2 & 3 have cracking on two or more faces (Photo 11). Pedestals 4 on Piers 2 & 3 also have areas of cracking,

Note ID: 3A131093571000D - continued

efflorescence and spalling with exposed corroded reinforcement (Photo 24).
However, these pedestals provide adequate support for the bearings.

Remaining pedestals on Piers 1, 2 & 3 would rate '5' alone.

Note ID: 3A1310935710012

Span 001 -- Pier: Pier Columns -- Rated 4, Was 4
Referenced Photos: "7"
2013 - Approximately 30% of the left face of Column 3 of Pier 1 has delaminated and hollow sounding concrete. Remaining areas of the Pier 1 columns have small isolated areas of cracking and surface spalls, but the columns are generally solid and would rate '5' alone.

Note ID: 3A1310935710008

Span 002 -- Deck Elements: Scuppers -- Rated 4, Was 4
Span 003 -- Deck Elements: Scuppers -- Rated 4, Was 4
Span 004 -- Deck Elements: Scuppers -- Rated 4, Was 4
Span 005 -- Deck Elements: Scuppers -- Rated 4, Was 4
Span 006 -- Deck Elements: Scuppers -- Rated 4, Was 4
Span 007 -- Deck Elements: Scuppers -- Rated 4, Was 4
Span 008 -- Deck Elements: Scuppers -- Rated 4, Was 4
Span 009 -- Deck Elements: Scuppers -- Rated 4, Was 4
Span 010 -- Deck Elements: Scuppers -- Rated 4, Was 4
Span 011 -- Deck Elements: Scuppers -- Rated 4, Was 4
Span 012 -- Deck Elements: Scuppers -- Rated 4, Was 4
Span 013 -- Deck Elements: Scuppers -- Rated 4, Was 4
Span 014 -- Deck Elements: Scuppers -- Rated 4, Was 4
Span 015 -- Deck Elements: Scuppers -- Rated 4, Was 4
Referenced Photos: "8", "18", "33", "43"
2013 - Scuppers in Spans 2 through 15 are typically plugged with sand and roadway debris (Photos 8 & 43). In addition, downspout hoppers are typically plugged up to 3/4 full with sand and roadway debris (Photo 18).

Piers with original ductile iron downspouts and those with new PVC downspouts are summarized on the attached Scupper Downspout Documentation. Original ductile iron downspouts have peeling paint, rust and corrosion. New PVC downspouts would rate '7' alone (Photo 33).

Note ID: 3A131093571000E

Span 002 -- Pier: Stem Solid Pier -- Rated 5, Was 5
Span 003 -- Pier: Stem Solid Pier -- Rated 5, Was 5
Referenced Photos: "12", "26"
2013 - Solid pier stem crash walls at Piers 2 & 3 were rehabilitated in the past, but currently have large scale map cracking (shrinkage cracking) with isolated areas of efflorescence and minor rust staining throughout (Photos 12 & 26). However, this condition is not sufficiently detrimental to warrant a rating lower

Inspection Notes

Carried: 481I 481I33012069 Crossed: CSX TRANS/AMTRAK CheckValue: 1,864,105,860

Note ID: 3A1310935710000E - continued

than '5' for these elements.

Note ID: 3A1310935710010

Span 002 -- Pier: Cap Beam -- Rated 4, Was 5
Referenced Photos: "13", "14"
2013 - Lower portions of the begin and end faces of the concrete cap beam at Pier 2 have horizontal cracking, efflorescence, delaminating concrete and deterioration and spalling to 3" deep with exposed corroded reinforcement (Photos 13 & 14).

Remaining areas of the Pier 2 cap beam have minor map cracking, but the concrete is solid and would otherwise rate '5' alone.

Note ID: 3A1310935710013

Span 002 -- Pier: Pier Columns -- Rated 5, Was 5
Span 011 -- Pier: Pier Columns -- Rated 5, Was 5
Referenced Photos: "15", "49"
2013 - The columns of Piers 2 & 11 have map cracking and small isolated areas of cracking, surface spalls and rust staining, but the columns are generally solid (Photos 15 & 49).

Note ID: 3A1310935710009

Span 003 -- Superstructure: Secondary Members -- Rated 4, Was 4
Referenced Photos: "19", "20"
2013 - Moderate to severe rust and corrosion with corrosion holes have developed in the cross bracing gusset plate below the superstructure joint at the end of Span 3 and the bottom K-bracing bars in this area have thinned out from corrosion and delamination (Photos 19 & 20).

Remaining areas of secondary members in Span 3 would rate '5' or '6' alone.

Note ID: 3A1310935710011

Span 003 -- Pier: Cap Beam -- Rated 5, Was 5
Referenced Photos: "25"
2013 - Concrete cap beams at all piers, except Pier 2, have varying degrees of map cracking, horizontal cracking, delaminating concrete and rust staining, but most areas of the cap beams are solid.

Inspection Date: 7/9/2013 RC: 33 BIN: 1093571

Inspection Notes

Carried: 481I 481I33012069 Crossed: CSX TRANS/AMTRAK CheckValue: 1,864,105,860

Note ID: 3A1310935710000F

Span 004 -- Pier: Stem Solid Pier -- Rated 4, Was 5
Referenced Photos: "29", "30"
2013 - The solid pier stem crash wall at Pier 4 was rehabilitated in the past, but currently has large scale map cracking (shrinkage cracking) with isolated areas of cracking, efflorescence and minor rust staining throughout (Photo 30). The begin face of the pier stem crash wall at Pier 4 also has an approximate 3 square foot isolated area of deterioration and spalling with exposed corroded reinforcement along the top edge (Photo 29).

Note ID: 3A1310935710004

Span 006 -- Deck Elements: Mono Deck Surface -- Rated 4, Was 5
Span 007 -- Deck Elements: Mono Deck Surface -- Rated 4, Was 5
Span 012 -- Deck Elements: Mono Deck Surface -- Rated 4, Was 4
Referenced Photos: "38", "40"
2013 - The mono deck surface along the wheel paths in all spans is beginning to wear smooth with a diminished depth of sawcut grooving in these areas (Photos 38 & 40).

There are also a few longitudinal cracks in the mono deck surface scattered throughout all spans (Photos 38 & 40). The worst cracks are in Spans 6, 7 & 12.

The mono deck surface would otherwise rate '5' in Spans 6, 7 & 12.

Note ID: 3A1310935710005

Span 007 -- Superstructure: Structural Deck -- Rated 6, Was 6
Referenced Photos: "41"
2013 - The structural deck in all spans is in generally very good condition, except for isolated areas of rust and corrosion along the underside of the corrugated stay-in-place forms in areas of apparent leakage.

Note ID: 3A1310935710001

End Abut -- Wingwalls: Walls -- Rated 4, Was 4
Referenced Photos: "2"
2013 - The end right cheek wall is has cracking with efflorescence and spalling at the lower inside corner. The spalled area is approximately 1 square foot by up to 4'' deep at the deck haunch/seat area. Remaining areas of the end wingwalls (cheek walls) would rate '5' or '6' alone.

Inspection Date: 7/9/2013 RC: 33 BIN: 1093571

Inspection Photos in Photo Number Order

Carried: 481I 481I33012069 Crossed: CSX TRANS/AMTRAK CheckValue: 1,864,105,860

Begin Joint



Photo Number: 1 Photo Filename: 13DSCN6449.jpg

End Right Cheek Wall



Photo Number: 2 Photo Filename: 13DSCN6360.jpg

Inspection Date: 7/9/2013 RC: 33 BIN: 1093571

Inspection Photos in Photo Number Order

Carried: 481I 481I33012069 Crossed: CSX TRANS/AMTRAK CheckValue: 1,864,105,860

End Right Approach



Photo Number: 3 Photo Filename: 13DSCN7319.jpg

Span 1 Right Parapet - Typical All Spans



Photo Number: 4 Photo Filename: 13DSCN6857.jpg

Inspection Date: 7/9/2013 RC: 33 BIN: 1093571

Inspection Photos in Photo Number Order

Carried: 481I 481I33012069 Crossed: CSX TRANS/AMTRAK CheckValue: 1,864,105,860

Pier 1 Bearing #2



Photo Number: 5 Photo Filename: 13DSCN6368.jpg

Pier 1 Pedestal 1 Left Face



Photo Number: 6 Photo Filename: 13DSCN6367.jpg

Inspection Date: 7/9/2013 RC: 33 BIN: 1093571

Inspection Photos in Photo Number Order

Carried: 481I 481I33012069 Crossed: CSX TRANS/AMTRAK CheckValue: 1,864,105,860

Pier 1 Column 3 Left Face



Photo Number: 7 Photo Filename: 13DSCN6369.jpg

Span 2 Left Scupper - Typical Spans 2-15



Photo Number: 8 Photo Filename: 13DSCN6358.jpg

Inspection Date: 7/9/2013 RC: 33 BIN: 1093571

Inspection Photos in Photo Number Order

Carried: 481I 481I33012069 Crossed: CSX TRANS/AMTRAK CheckValue: 1,864,105,860

Pier 2 Joint



Photo Number: 9 Photo Filename: 13DSCN6415.jpg

Pier 2 Trough Supports - Typical of All Troughs



Photo Number: 10 Photo Filename: 13DSCN6450.jpg

Inspection Date: 7/9/2013 RC: 33 BIN: 1093571

Inspection Photos in Photo Number Order

Carried: 481I 481I33012069 Crossed: CSX TRANS/AMTRAK CheckValue: 1,864,105,860

Pier 2 Pedestal 1 Right Face



Photo Number: 11 Photo Filename: 13DSCN6370.jpg

Pier 2 Stem End Face



Photo Number: 12 Photo Filename: 13DSCN6371.jpg

Inspection Date: 7/9/2013 RC: 33 BIN: 1093571

Inspection Photos in Photo Number Order

Carried: 481I 481I33012069 Crossed: CSX TRANS/AMTRAK CheckValue: 1,864,105,860

Pier 2 Cap Beam Begin Left Face



Photo Number: 13 Photo Filename: 13DSCN6451.jpg

Pier 2 Cap Beam End Left Face



Photo Number: 14 Photo Filename: 13DSCN6452.jpg

Inspection Date: 7/9/2013 RC: 33 BIN: 1093571

Inspection Photos in Photo Number Order

Carried: 481I 481I33012069 Crossed: CSX TRANS/AMTRAK CheckValue: 1,864,105,860

Pier 2 Column 2 End and Left Face



Photo Number: 15 Photo Filename: 13DSCN6453.jpg

Right Fascia at Pier 3 Joint



Photo Number: 16 Photo Filename: 13DSCN6376.jpg

Inspection Date: 7/9/2013 RC: 33 BIN: 1093571

Inspection Photos in Photo Number Order

Carried: 481I 481I33012069 Crossed: CSX TRANS/AMTRAK CheckValue: 1,864,105,860

Span 3 Right Parapet - Typical All Spans



Photo Number: 17 Photo Filename: 13DSCN6414.jpg

Pier 3 Right Hopper



Photo Number: 18 Photo Filename: 13DSCN6377.jpg

Inspection Date: 7/9/2013 RC: 33 BIN: 1093571

Inspection Photos in Photo Number Order

Carried: 481I 481I33012069 Crossed: CSX TRANS/AMTRAK CheckValue: 1,864,105,860

Span 3 at End of Bay 1



Photo Number: 19 Photo Filename: 13DSCN6380.jpg

Span 3 Bay 1 at Pier 3



Photo Number: 20 Photo Filename: 13DSCN6381.jpg

Inspection Date: 7/9/2013 RC: 33 BIN: 1093571

Inspection Photos in Photo Number Order

Carried: 481I 481I33012069 Crossed: CSX TRANS/AMTRAK CheckValue: 1,864,105,860

Span 3 Bay 2 at Pier 3 - Typical All Spans



Photo Number: 21 Photo Filename: 13DSCN6378.jpg

Pier 3 Joint Right Side



Photo Number: 22 Photo Filename: 13DSCN6375.jpg

Inspection Date: 7/9/2013 RC: 33 BIN: 1093571

Inspection Photos in Photo Number Order

Carried: 481I 481I33012069 Crossed: CSX TRANS/AMTRAK CheckValue: 1,864,105,860

Span 3 Joint Trough - Typical Spans 1-5 & 9



Photo Number: 23 Photo Filename: 13DSCN6373.jpg

Pier 3 Pedestal 4 - Typical Pier 2 Pedestal 4



Photo Number: 24 Photo Filename: 13DSCN6372.jpg

Inspection Date: 7/9/2013 RC: 33 BIN: 1093571

Inspection Photos in Photo Number Order

Carried: 481I 481I33012069 Crossed: CSX TRANS/AMTRAK CheckValue: 1,864,105,860

Pier 3 Cap Beam Bay 2 Begin Face



Photo Number: 25 Photo Filename: 13DSCN6379.jpg

Pier 3 Stem End Face



Photo Number: 26 Photo Filename: 13DSCN6382.jpg

Inspection Date: 7/9/2013 RC: 33 BIN: 1093571

Inspection Photos in Photo Number Order

Carried: 481I 481I33012069 Crossed: CSX TRANS/AMTRAK CheckValue: 1,864,105,860

Span 4 Left Parapet - Typical All Spans



Photo Number: 27 Photo Filename: 13DSCN6413.jpg

Span 4 Girder 3 Near Pier 4



Photo Number: 28 Photo Filename: 13DSCN6386.jpg

Inspection Date: 7/9/2013 RC: 33 BIN: 1093571

Inspection Photos in Photo Number Order

Carried: 481I 481I33012069 Crossed: CSX TRANS/AMTRAK CheckValue: 1,864,105,860

Pier 4 Stem Begin Face



Photo Number: 29 Photo Filename: 13DSCN6385.jpg

Pier 4 Stem End Face



Photo Number: 30 Photo Filename: 13DSCN6388.jpg

Inspection Date: 7/9/2013 RC: 33 BIN: 1093571

Inspection Photos in Photo Number Order

Carried: 481I 481I33012069 Crossed: CSX TRANS/AMTRAK CheckValue: 1,864,105,860

Span 5 Left Parapet at Midspan



Photo Number: 31 Photo Filename: 13DSCN6359.jpg

Span 5 Right Parapet at Midspan - Outside Face



Photo Number: 32 Photo Filename: 13DSCN6392.jpg

Inspection Date: 7/9/2013 RC: 33 BIN: 1093571

Inspection Photos in Photo Number Order

Carried: 481I 481I33012069 Crossed: CSX TRANS/AMTRAK CheckValue: 1,864,105,860

Span 5 Downspout - Typical of New Downspouts



Photo Number: 33 Photo Filename: 13DSCN6387.jpg

Pier 5 Joint



Photo Number: 34 Photo Filename: 13DSCN6396.jpg

Inspection Date: 7/9/2013 RC: 33 BIN: 1093571

Inspection Photos in Photo Number Order

Carried: 481I 481I33012069 Crossed: CSX TRANS/AMTRAK CheckValue: 1,864,105,860

Pier 5 Joint Trough



Photo Number: 35 Photo Filename: 13DSCN6393.jpg

Pier 6 Joint Bay 1



Photo Number: 36 Photo Filename: 13DSCN6397.jpg

Inspection Date: 7/9/2013 RC: 33 BIN: 1093571

Inspection Photos in Photo Number Order

Carried: 481I 481I33012069 Crossed: CSX TRANS/AMTRAK CheckValue: 1,864,105,860

Pier 6 Joint Bay 1



Photo Number: 37 Photo Filename: 13DSCN6399.jpg

Top of Span 6 - Typical All Spans



Photo Number: 38 Photo Filename: 13DSCN6412.jpg

Inspection Date: 7/9/2013 RC: 33 BIN: 1093571

Inspection Photos in Photo Number Order

Carried: 481I 481I33012069 Crossed: CSX TRANS/AMTRAK CheckValue: 1,864,105,860

Pier 6 Joint Bays 2 & 3



Photo Number: 39 Photo Filename: 13DSCN6403.jpg

Span 7 Left Lane - Typical All Spans

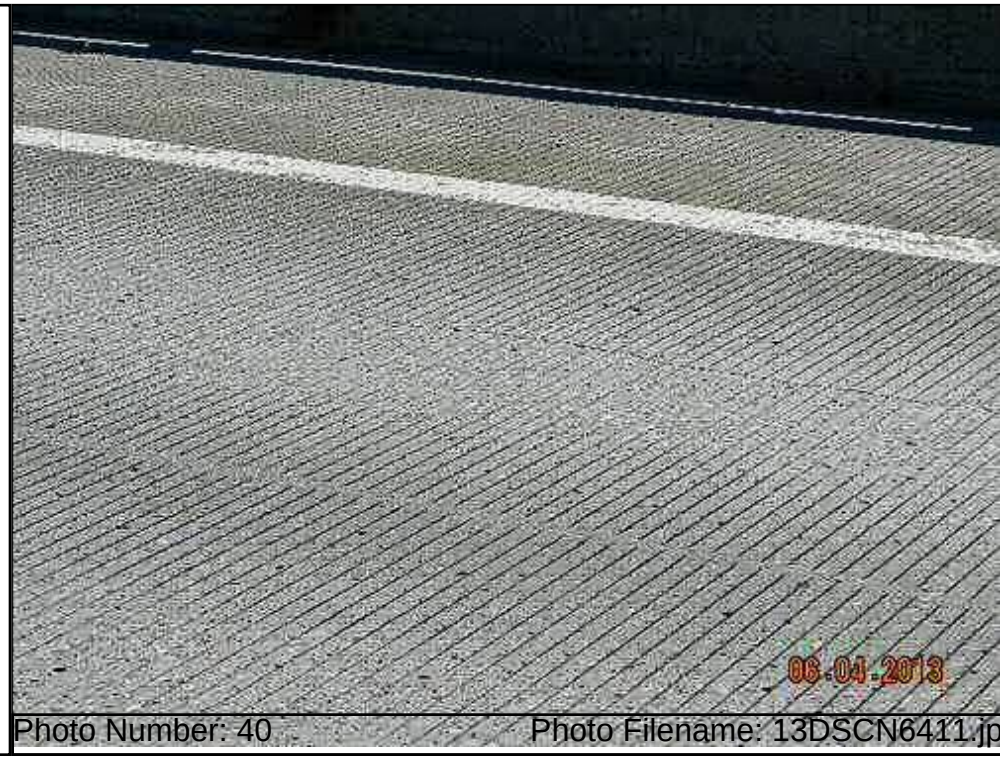

Photo Number: 40 Photo Filename: 13DSCN6411.jpg

Inspection Date: 7/9/2013 RC: 33 BIN: 1093571

Inspection Photos in Photo Number Order

Carried: 481I 481I33012069 Crossed: CSX TRANS/AMTRAK CheckValue: 1,864,105,860

Span 7 Bay 1 at Pier 7 - Typical All Spans



Photo Number: 41 Photo Filename: 13DSCN6405.jpg

Pier 7 Joint



Photo Number: 42 Photo Filename: 13DSCN6407.jpg

Inspection Date: 7/9/2013 RC: 33 BIN: 1093571

Inspection Photos in Photo Number Order

Carried: 481I 481I33012069 Crossed: CSX TRANS/AMTRAK CheckValue: 1,864,105,860

Span 8 Right Scupper



Photo Number: 43 Photo Filename: 13DSCN6410.jpg

Pier 8 Joint Bay 3



Photo Number: 44 Photo Filename: 13DSCN6409.jpg

Inspection Date: 7/9/2013 RC: 33 BIN: 1093571

Inspection Photos in Photo Number Order

Carried: 481I 481I33012069 Crossed: CSX TRANS/AMTRAK CheckValue: 1,864,105,860

Span 9 Right Fascia Girder - Typical Span 10



Photo Number: 45 Photo Filename: 13DSCN6454.jpg

Pier 9 Joint Trough - Typical Spans 1-5 & 9



Photo Number: 46 Photo Filename: 13DSCN6458.jpg

Inspection Date: 7/9/2013 RC: 33 BIN: 1093571

Inspection Photos in Photo Number Order

Carried: 481I 481I33012069 Crossed: CSX TRANS/AMTRAK CheckValue: 1,864,105,860

Pier 9 Bay 2 Trough Supports



Photo Number: 47 Photo Filename: 13DSCN6455.jpg

Pier 11 Bearing #1 - Typical Spans 1-3 & 6-14



Photo Number: 48 Photo Filename: 13DSCN6461.jpg

Inspection Date: 7/9/2013 RC: 33 BIN: 1093571

Inspection Photos in Photo Number Order

Carried: 481I 481I33012069 Crossed: CSX TRANS/AMTRAK CheckValue: 1,864,105,860

Pier 11 Column 3 Begin Face



Photo Number: 49 Photo Filename: 13DSCN6460.jpg

Pier 13 Bearing #1 - Typical Spans 1-3 & 6-14



Photo Number: 50 Photo Filename: 13DSCN6463.jpg

Inspection Date: 7/9/2013 RC: 33 BIN: 1093571

Inspection Photos in Photo Number Order

Carried: 481I 481I33012069 Crossed: CSX TRANS/AMTRAK CheckValue: 1,864,105,860

Pier 14 Joint Bay 2



Photo Number: 51 Photo Filename: 13DSCN6465.jpg

Span 15 Right Fascia - Typical All Spans



Photo Number: 52 Photo Filename: 13DSCN6361.jpg

Inspection Date: 7/9/2013 RC: 33 BIN: 1093571

Inspection Photos in Photo Number Order

Carried: 481I 481I33012069 Crossed: CSX TRANS/AMTRAK CheckValue: 1,864,105,860

Span 15 Left Fascia Girder - Typical All Spans



Photo Number: 53 Photo Filename: 13DSCN6366.jpg

No Photo

Inspection Date: 7/9/2013 RC: 33 BIN: 1093571

Inspection Sketches in Sketch SysID Order

Carried: 481I 481I33012069 Crossed: CSX TRANS/AMTRAK CheckValue: 1,864,105,860

Sketch ID: 3A1310935710000 Sketch Filename: photo_plan_1.13

General Sketch for Bridge
Referenced Photos:

Photo Location Plan - Spans 1-3

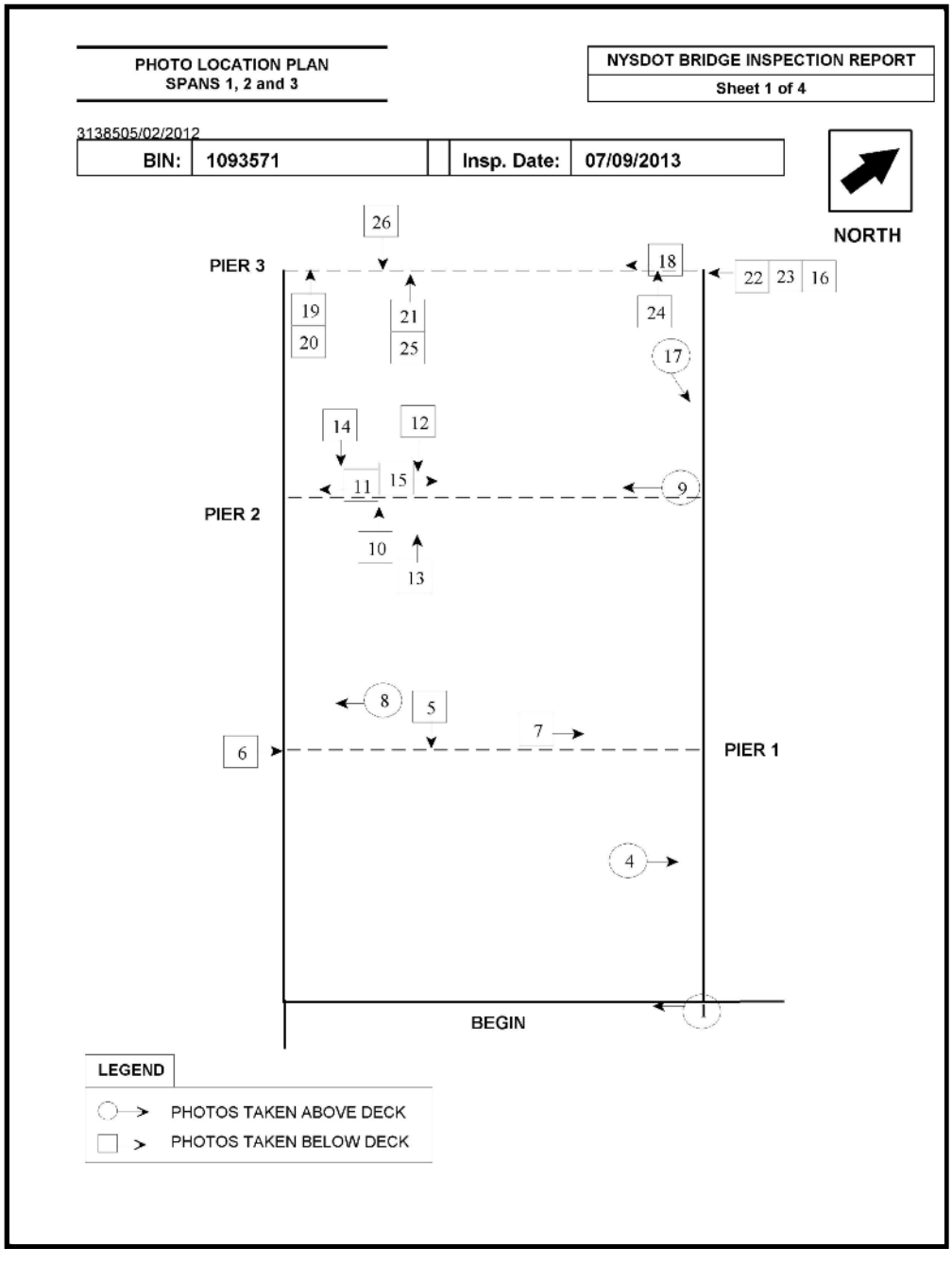

Inspection Date: 7/9/2013 RC: 33 BIN: 1093571

Inspection Sketches in Sketch SysID Order

Carried: 481I 481I33012069 Crossed: CSX TRANS/AMTRAK CheckValue: 1,864,105,860

Sketch ID: 3A1310935710001 Sketch Filename: photo_plan_2.13

General Sketch for Bridge
Referenced Photos:

Photo Location Plan - Spans 4-6

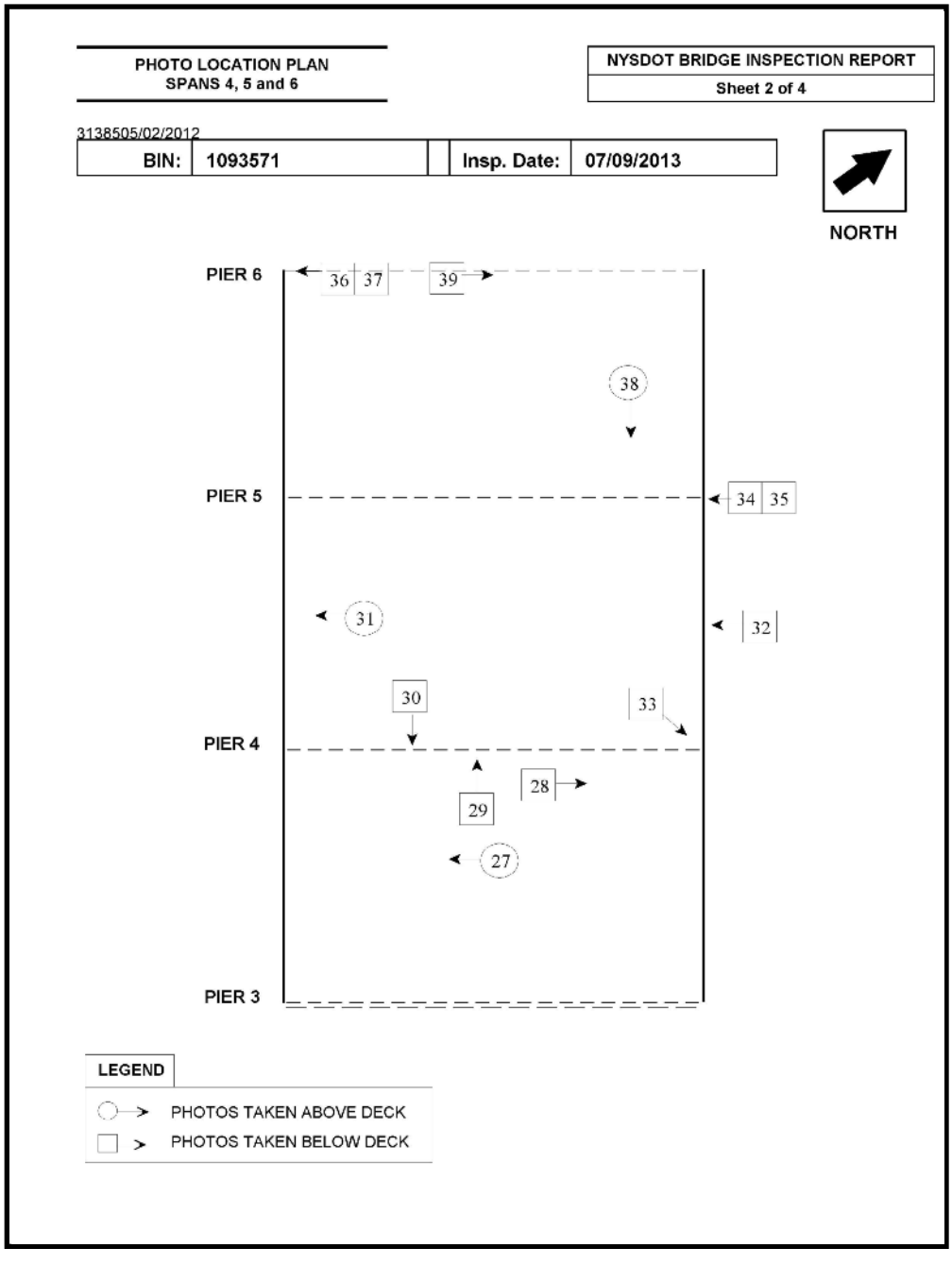

Inspection Date: 7/9/2013 RC: 33 BIN: 1093571

Inspection Sketches in Sketch SysID Order

Carried: 481I 481I33012069 Crossed: CSX TRANS/AMTRAK CheckValue: 1,864,105,860

Sketch ID: 3A1310935710002 Sketch Filename: photo_plan_3.13

General Sketch for Bridge
Referenced Photos:

Photo Location Plan - Spans 7-9

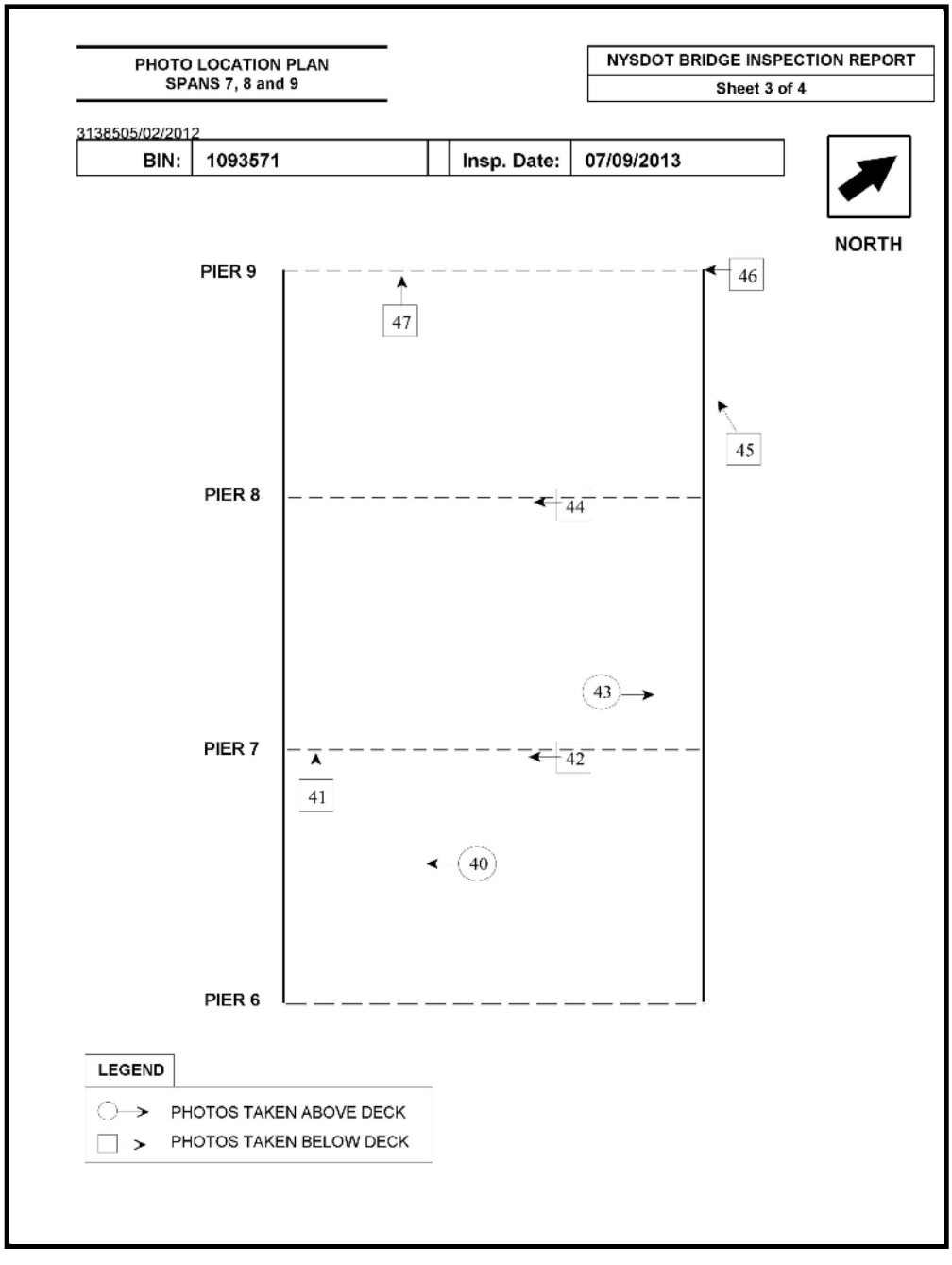

Inspection Date: 7/9/2013 RC: 33 BIN: 1093571

Inspection Sketches in Sketch SysID Order

Carried: 481I 481I33012069 Crossed: CSX TRANS/AMTRAK CheckValue: 1,864,105,860

Sketch ID: 3A1310935710003 Sketch Filename: photo_plan_4.13

General Sketch for Bridge
Referenced Photos:

Photo Location Plan - Spans 10-15

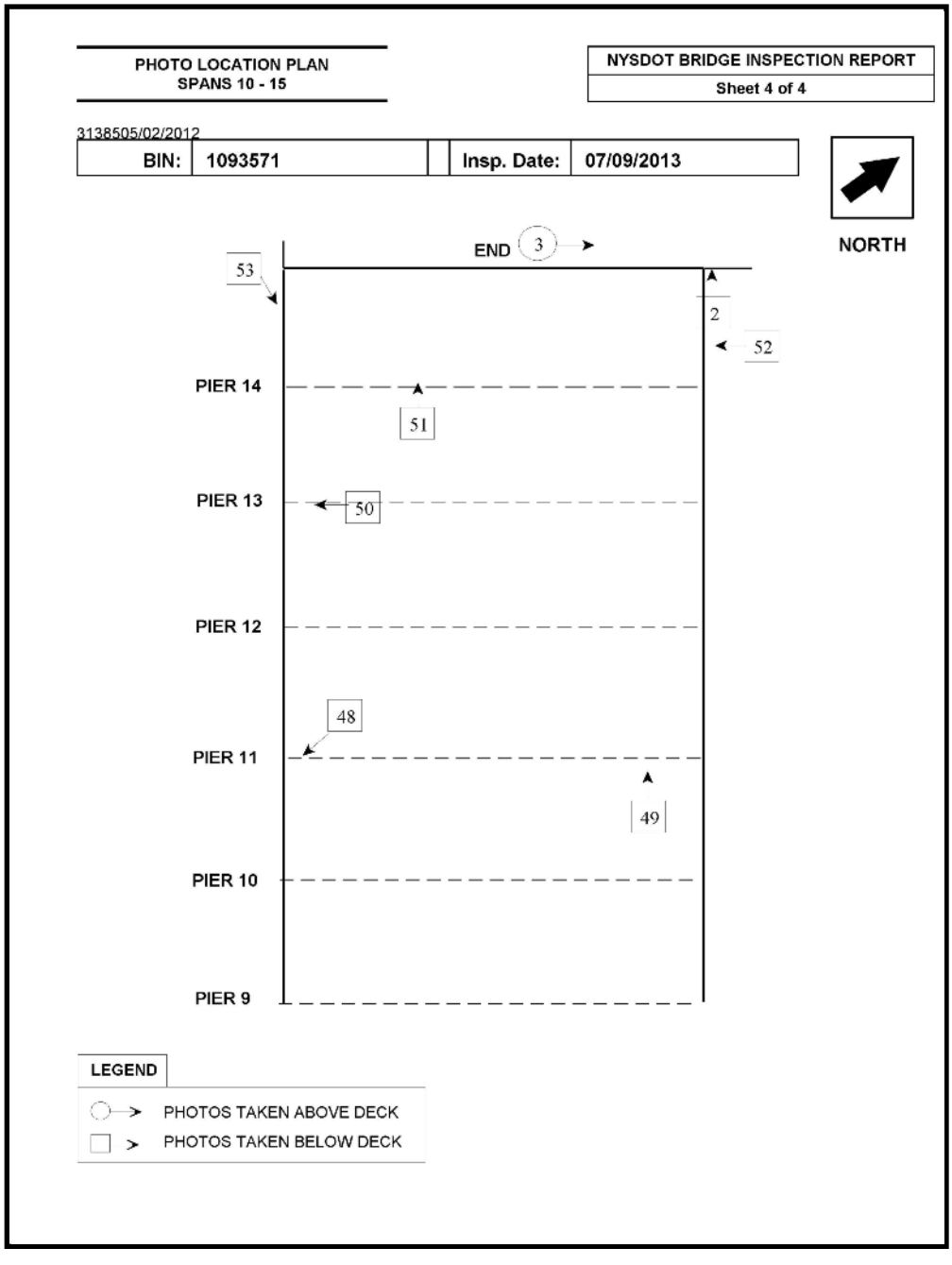

Inspection Date: 7/9/2013 RC: 33 BIN: 1093571

Inspection Sketches in Sketch SysID Order

Carried: 481I 481I33012069 Crossed: CSX TRANS/AMTRAK CheckValue: 1,864,105,860

Sketch ID: 3A1310935710004 Sketch Filename: LdRat.13

General Sketch for Bridge
Referenced Photos:

Load Rating Field Check Form

NYSDOT BRIDGE INSPECTION REPORT			
SHEET	1	OF	1

LOAD RATING FIELD CHECK FORM

BIN:	1093571		Insp. Date:	07/09/2013

Dead Load - Note Changes since Last load Rating or state "NONE":

None

Section Loss - Note locations and amount of loss on each girder or state "NONE":

No significant change since the last inspection.

Additional Notes:

None

Attachments:

None

Team Leader: James W. Gorzynski, NYS PE #53772

Inspection Date: 7/9/2013 RC: 33 BIN: 1093571

Inspection Sketches in Sketch SysID Order

Carried: 481I 481I33012069 Crossed: CSX TRANS/AMTRAK CheckValue: 1,864,105,860

Sketch ID: 3A1310935710005 Sketch Filename: RR_Clearance.13

General Sketch for Bridge
Referenced Photos:

Railroad Vertical Clearances

PLAN VIEW - RAILROAD VERTICAL CLEARANCES (Feet)

NYSDOT BRIDGE INSPECTION REPORT			
SHEET	1	OF	1

Insp. Date:	07/09/2013	BIN:	1093571

NORTH

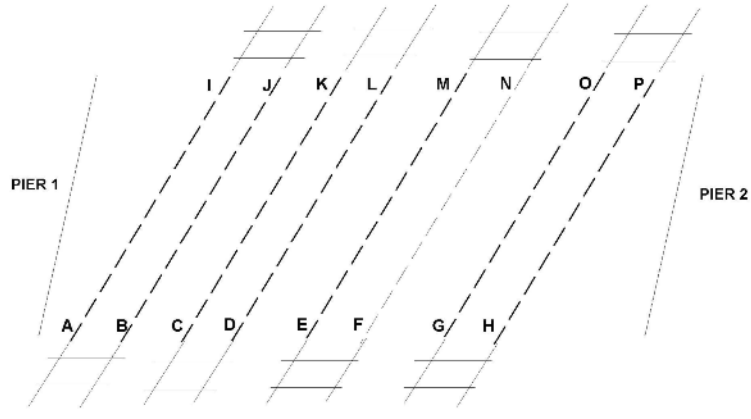

PLAN (NTS)

YEAR>	2013			YEAR>	2013		
Pt #				Pt #			
A	24'-10"			I	24'-11 1/8"		
B	25'-0"			J	24'-10 3/16"		
C	24'-11 5/8"			K	24'-9 3/4"		
D	24'-7/8"			L	23'-11 5/8"		
E	24'-6 7/8"			M	24'-6 5/8"		
F	24'-7"			N	24'-6 7/8"		
G	24'-8 1/2"			O	24'-7 3/16"		
H	24'-8 3/4"			P	24'-7 3/8"		

NOTES: 2013 -Form created and entered in BIPPI.
Span 4 Tracks 5 & 6 Vertical Clearance = 26'+, Span 5 Tracks 7-11 Vertical Clearance = 26'+.

Inspection Date: 7/9/2013 RC: 33 BIN: 1093571

Inspection Sketches in Sketch SysID Order

Carried: 481I 481I33012069 Crossed: CSX TRANS/AMTRAK CheckValue: 1,864,105,860

Sketch ID: 3A1310935710006 Sketch Filename: BD245.13

Span 011 -- Pier: Bearings, Bolts, Pads -- Rated 3, Was 4
Referenced Photos: "48", "50"

TA Rocker 05-001

BD 245

NYSDOT BRIDGE INSPECTION REPORT
SHEET 1 OF 1

TA Rocker 05-001

Insp. Date:	07/09/2013		BIN:	1093571

Inspection and Monitoring Requirements for High Rocker Bearings *(Inches)

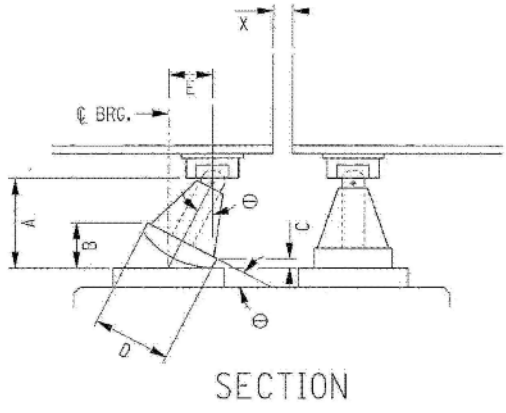

SECTION

Rocker Bearing Field Documentation Summary

1. Reference Sketch:
A = Height of rocker
B = High corner of rocker plate
C = Low corner of rocker plate
D = width of rocker plate
θ = Angle of rotation (tilt)
E = Eccentricity (translation)
X = minimum clear distance between girders or from girder to abutment

Date	Bearing Location	Ambient Temp	Dim "A"	Dim "B"	Dim "C"	Dim "D"	Dim "X"	Angle "θ"	Dim "E"
10/14/05	Pier #11 @ G1	16° C	13.5"	3.3"	2.1"	11.9"	8.9"	8°	0.98"
8/27/07	Pier #11 @ G1	24° C	13.5"	3.6"	2.6"	12.0"	9.0"	7°	0.92"
7/6/11	Pier #11 @ G1	80° F	13.5"	3.25"	2"	12"	9"	8°	1"
6/6/13	Pier #11 @ G1	60° F	13.5"	3.5"	1.69"	12"	9.25"	8.68°	1.06"
7/9/13	Pier #11 @ G1	85° F	13.5"	3.38"	1.94"	12"	9"	6.87°	1.31"

Inspection Date: 7/9/2013 RC: 33 BIN: 1093571

Inspection Sketches in Sketch SysID Order

Carried: 481I 481I33012069 Crossed: CSX TRANS/AMTRAK CheckValue: 1,864,105,860

Sketch ID: 3A1310935710007 Sketch Filename: Downspout_Doc.13

Span 002 -- Deck Elements: Scuppers -- Rated 4, Was 4
Span 003 -- Deck Elements: Scuppers -- Rated 4, Was 4
Span 004 -- Deck Elements: Scuppers -- Rated 4, Was 4
Span 005 -- Deck Elements: Scuppers -- Rated 4, Was 4
Span 006 -- Deck Elements: Scuppers -- Rated 4, Was 4
Span 007 -- Deck Elements: Scuppers -- Rated 4, Was 4
Span 008 -- Deck Elements: Scuppers -- Rated 4, Was 4
Span 009 -- Deck Elements: Scuppers -- Rated 4, Was 4
Span 010 -- Deck Elements: Scuppers -- Rated 4, Was 4
Span 011 -- Deck Elements: Scuppers -- Rated 4, Was 4
Span 012 -- Deck Elements: Scuppers -- Rated 4, Was 4
Span 013 -- Deck Elements: Scuppers -- Rated 4, Was 4
Span 014 -- Deck Elements: Scuppers -- Rated 4, Was 4

Referenced Photos: "8", "18", "33", "43"

Scupper Downspout Documentation

Inspection Date: 7/9/2013 RC: 33 BIN: 1093571

Inspection Sketches in Sketch SysID Order

Carried: 481I 481I33012069 Crossed: CSX TRANS/AMTRAK CheckValue: 1,864,105,860

Sketch ID: 3A1310935710007 Sketch Filename: Downspout_Doc.13

SCUPPER DOWNSPOUT DOCUMENTATION

NYSDOT BRIDGE INSPECTION REPORT			
SHEET	1	OF	1

7/09/2013093571

Insp. Date:	07/09/2013	BIN:	1093571

PIER NUMBER	BEGIN FACE		END FACE	
	Left	Right	Left	Right
1	--	--	O	O
2	--	--	O	O
3	--	--	O	O
4	--	--	N	N
5	N	N	--	--
6	O	O	--	--
7	O	O	--	--
8	N	N	--	--
9	O	O	--	--
10	--	N	--	--
11	--	N	--	--
12	--	N	--	--
13	--	N	--	--
14	--	N	--	--

KEY:
O = Older Ductile Iron Downspout
N = Newer PVC Downspout
-- = No Downspout

Inspection Date: 7/9/2013 RC: 33 BIN: 1093571

Gen. Rec., Postings, Federal Ratings, etc.

Carried: 481I 481I33012069 Crossed: CSX TRANS/AMTRAK CheckValue: 1,864,105,860

Overall Condition:

GENERAL RECOMMENDATION: 5

Computed Condition Rating: 4.429

Problems Requiring Action:

FURTHER INVESTIGATION IS NEEDED
Monitor G1 high rocker bearing on Pier 11 when very cold.

NO Flags Issued

POSTINGS:

Inspector Confirmed existing Posting data as correct.
Posted Vertical Clearance ON the bridge is: No Posting
Posted Vertical Clearance UNDER the bridge is: No Posting
No Load Restriction is posted on this bridge

Overloads Observed:

NO Overload Vehicles were observed on this bridge

FEDERAL RATINGS:

NBI Deck Condition: 6
NBI Superstruct Condition: 6
NBI Substruct Condition: 5
NBI Channel Condition: N
NBI Culvert Condition: N

Diving Inspection Needs:

Diving Inspection Required? No Date of Last Diving Inspection: No Date

Inventory Problems:

Inventory Problems Exist? No

Miscellaneous:

Time Required to Inspect Bridge: 16.5 Hours

Lane Closure Needs: By Contract for 15 Hours

Railroad Flagging is Required for 12.0 Hours

No Pedestrian Fence

No Snow Fence

The BIN Plate is in OK condition

Inspection Date: 7/9/2013 RC: 33 BIN: 1093571

Gen. Rec., Postings, Federal Ratings, etc.

Carried: 481I 481I33012069 Crossed: CSX TRANS/AMTRAK CheckValue: 1,864,105,860

Special Emphasis Inspection Required:

Non-Redundant/Fracture Critical Members - No
Pin and Hangers - No
Fatigue-Prone Welds - Yes
Non-Categorized Fatigue-Prone Details - No
Other (Specified in Text) - No

Special Emphasis Details:

2013 - A 100% hands-on inspection was performed on all special emphasis details.

Category 'D' welds at the ends of 1'-0" radius gusset plates attached to bottom (tension) flanges of exterior and first interior girders in Spans 2 through 6 and in Span 10 as shown on Sheets 21, 22 & 26 of the plans.

General Notes To the Next Inspector:

2013 - A CSX Railroad Flagman is required for access to Spans 1 - 5 for use of a 60' UBIU and for access to Piers 1 - 4.
Access to Spans 6 - 15 from above is with a 60' UBIU.
Access to Spans 6 - 15 from below is through a CSX rail yard gate and along a maintenance road between the two I481 bridges.

The bridge is at CSX Railroad Milepost QC 285.23.

Improvements Observed:

2013 - None

Inspection Date: 7/9/2013 RC: 33 BIN: 1093571

Review Progress and Personnel Present at Inspection

Carried: 481I 481I33012069 Crossed: CSX TRANS/AMTRAK CheckValue: 1,864,105,860

Inspection Submission Status:

Submitted to QC Engineer on: 9/4/2013
QC Submission Number: A0331701

QC Review Completed: 9/4/2013
QC Engineer: Stephen L. Gauthier

Submitted to Liaison Engineer on: 9/4/2013
Liaison Submission Number: 03327

Liaison Review Completed: 9/9/2013
Liaison Engineer: TODD M. HERMANN

Submitted for BIIS Processing on: 9/9/2013
BIIS Submission Number: .kp1

Current Status: Keypunched, Sent to BIIS
Check Value: 1,864,105,860

Personnel Present During Inspection:

James W. Gorzynski - Team Leader
Debra A. Tomsa - Assistant Team Leader
Bill Buckland - CP Ward
James Flynn - NYSDOT M.O.
Todd Hermann - NYDSOT M.O.
Bill LeBlanc - NYSDOT M.O.
Mark Maddox - CSX
Matt Pasquale - C.P.Ward
Kevin Smith - Flagman

Inspection Date: 7/9/2013 RC: 33 BIN: 1093571

Inspection Access Requirements

Carried: 481I 481I33012069 Crossed: CSX TRANS/AMTRAK CheckValue: 1,864,105,860

Equipment Required for Inspection

Access Requirement Changes WERE Noted During This Inspection.
This Listing is from the Inspection.

ACCESS CATEGORIES FOR ENTIRE BRIDGE
- Required: Walking, 60 Ft UBIU (18 m), Railroad Flagman
- Required: Lane Closure, Shadow Vehicle

ACCESS CATEGORIES FOR SPAN 1
- Required: Walking, 60 Ft UBIU (18 m), Lane Closure
- Required: Shadow Vehicle

ACCESS CATEGORIES FOR SPAN 2
- Required: Walking, 60 Ft UBIU (18 m), Railroad Flagman
- Required: Lane Closure, Shadow Vehicle

ACCESS CATEGORIES FOR SPAN 3
- Required: Walking, 60 Ft UBIU (18 m), Railroad Flagman
- Required: Lane Closure, Shadow Vehicle

ACCESS CATEGORIES FOR SPAN 4
- Required: Walking, 60 Ft UBIU (18 m), Railroad Flagman
- Required: Lane Closure, Shadow Vehicle

ACCESS CATEGORIES FOR SPAN 5
- Required: Walking, 60 Ft UBIU (18 m), Railroad Flagman
- Required: Lane Closure, Shadow Vehicle

ACCESS CATEGORIES FOR SPAN 6
- Required: Walking, 60 Ft UBIU (18 m), Lane Closure
- Required: Shadow Vehicle

ACCESS CATEGORIES FOR SPAN 7
- Required: Walking, 60 Ft UBIU (18 m), Medium Lift, Lane Closure
- Required: Shadow Vehicle

ACCESS CATEGORIES FOR SPAN 8
- Required: Walking, 60 Ft UBIU (18 m), Medium Lift, Lane Closure
- Required: Shadow Vehicle

ACCESS CATEGORIES FOR SPAN 9
- Required: Walking, 60 Ft UBIU (18 m), Medium Lift, Lane Closure
- Required: Shadow Vehicle

ACCESS CATEGORIES FOR SPAN 10
- Required: Walking, 60 Ft UBIU (18 m), Medium Lift, Lane Closure
- Required: Shadow Vehicle

ACCESS CATEGORIES FOR SPAN 11
- Required: Walking, Extension Ladder, 60 Ft UBIU (18 m)
- Required: Medium Lift, Lane Closure, Shadow Vehicle

ACCESS CATEGORIES FOR SPAN 12
- Required: Walking, 60 Ft UBIU (18 m), Medium Lift, Lane Closure

Equipment Required for Inspection - continued

Required: Shadow Vehicle

ACCESS CATEGORIES FOR SPAN 13
Required: Walking, 60 Ft UBIU (18 m), Medium Lift, Lane Closure
Required: Shadow Vehicle

ACCESS CATEGORIES FOR SPAN 14
Required: Walking, 60 Ft UBIU (18 m), Medium Lift, Lane Closure
Required: Shadow Vehicle

ACCESS CATEGORIES FOR SPAN 15
Required: Walking, Small Lift, Lane Closure, Shadow Vehicle

Inspection Date: 7/9/2013 RC: 33 BIN: 1093571

Culvert Measurements

Carried: 481I 481I33012069 Crossed: CSX TRANS/AMTRAK CheckValue: 1,864,105,860

Culvert Measurements

NO CULVERT DATA FOR BIN 1093571

Standard Photos **RC: 33 BIN: 1093571**

Carried: 481I 481I33012069 Crossed: CSX TRANS/AMTRAK

1093571_LOCATION_MAP.JPG

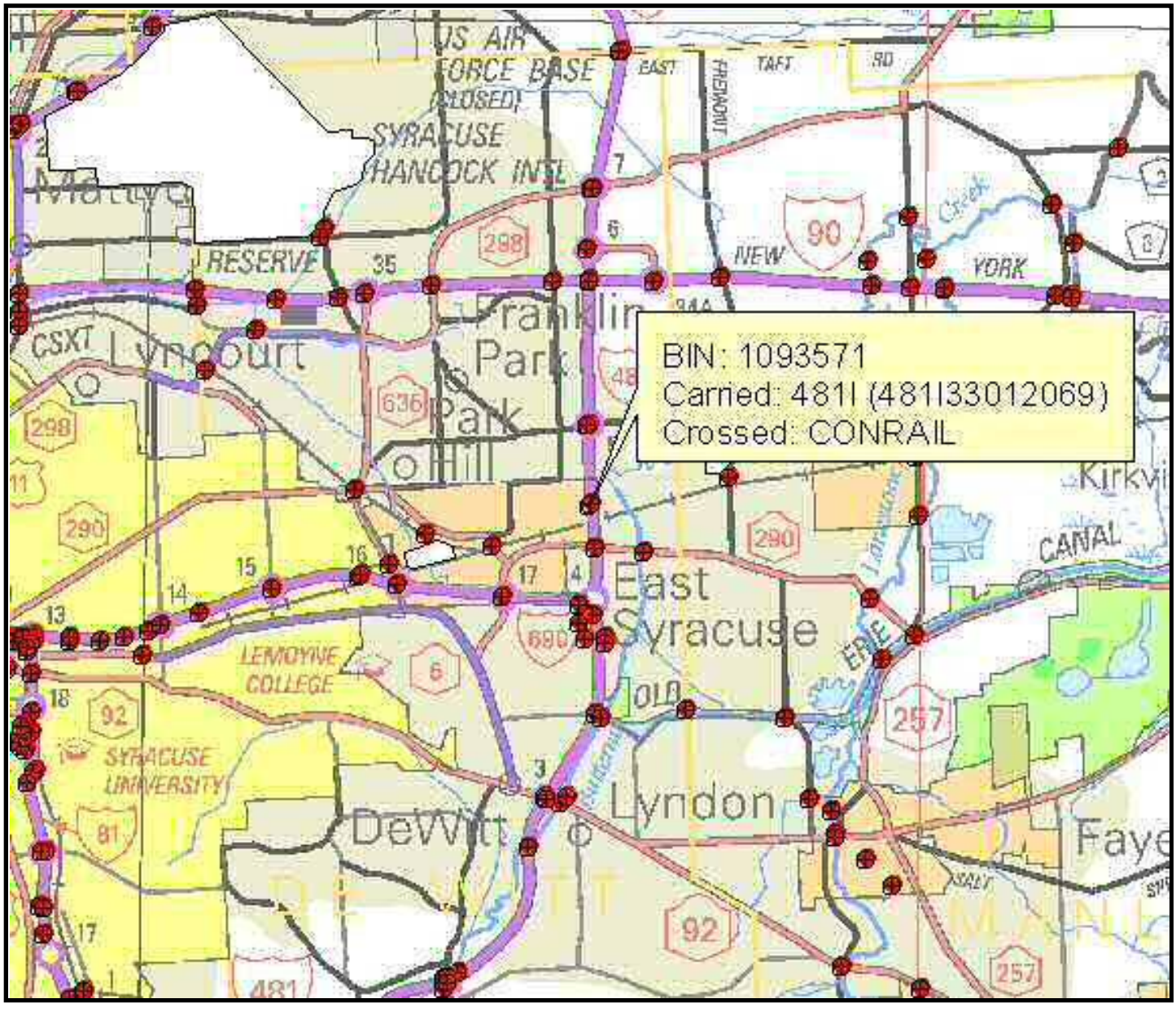

Standard Photos **RC: 33 BIN: 1093571**

Carried: 481I 481I33012069 Crossed: CSX TRANS/AMTRAK

1093571_QUAD_MAP.JPG

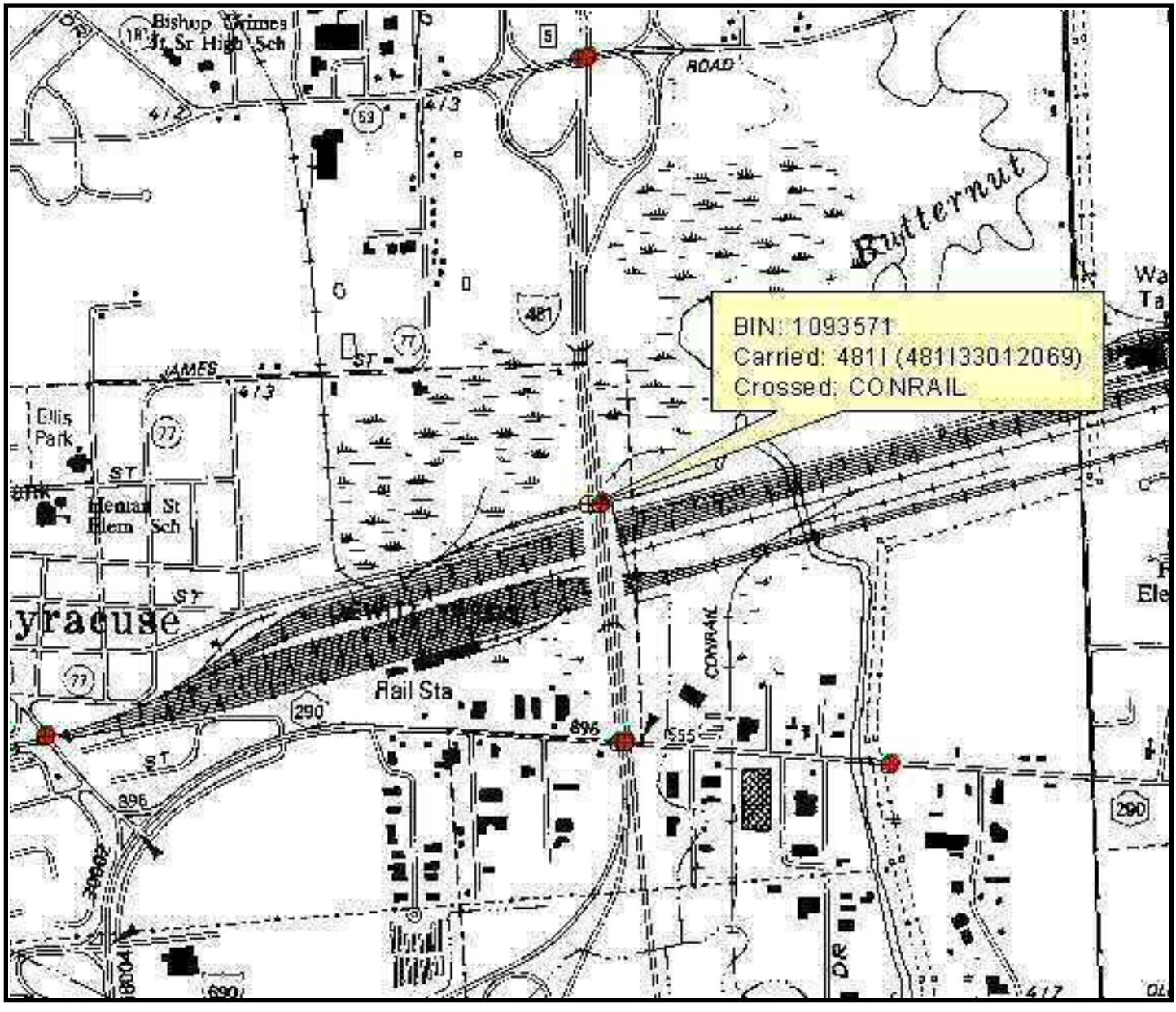

Standard Photos **RC: 33 BIN: 1093571**

Carried: 481I 481I33012069 Crossed: CSX TRANS/AMTRAK

BeginAbutment11.jpg



Standard Photos **RC: 33 BIN: 1093571**

Carried: 481I 481I33012069 Crossed: CSX TRANS/AMTRAK

BeginApproach11.jpg



Standard Photos **RC: 33 BIN: 1093571**

Carried: 481I 481I33012069 Crossed: CSX TRANS/AMTRAK

BeginLeftWingwall11.jpg

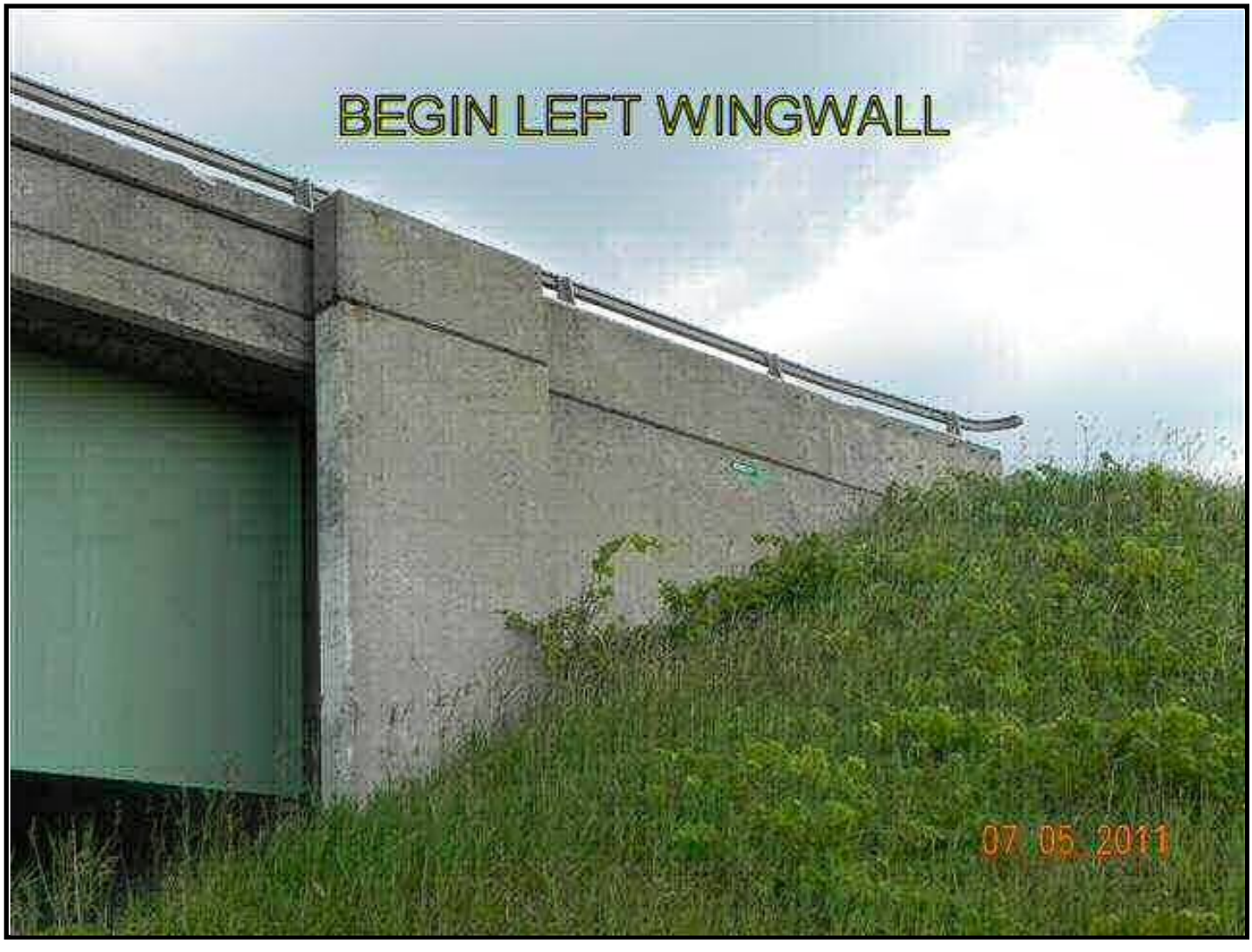

Standard Photos **RC: 33 BIN: 1093571**

Carried: 481I 481I33012069 Crossed: CSX TRANS/AMTRAK

EndApproach11.jpg



Standard Photos **RC: 33 BIN: 1093571**

Carried: 481I 481I33012069 Crossed: CSX TRANS/AMTRAK

F2Left11.jpg



Standard Photos **RC: 33 BIN: 1093571**

Carried: 481I 481I33012069 Crossed: CSX TRANS/AMTRAK

F2Right11.jpg



Pier1.11.jpg



Standard Photos **RC: 33 BIN: 1093571**

Carried: 481I 481I33012069 Crossed: CSX TRANS/AMTRAK

RightElevation11.jpg

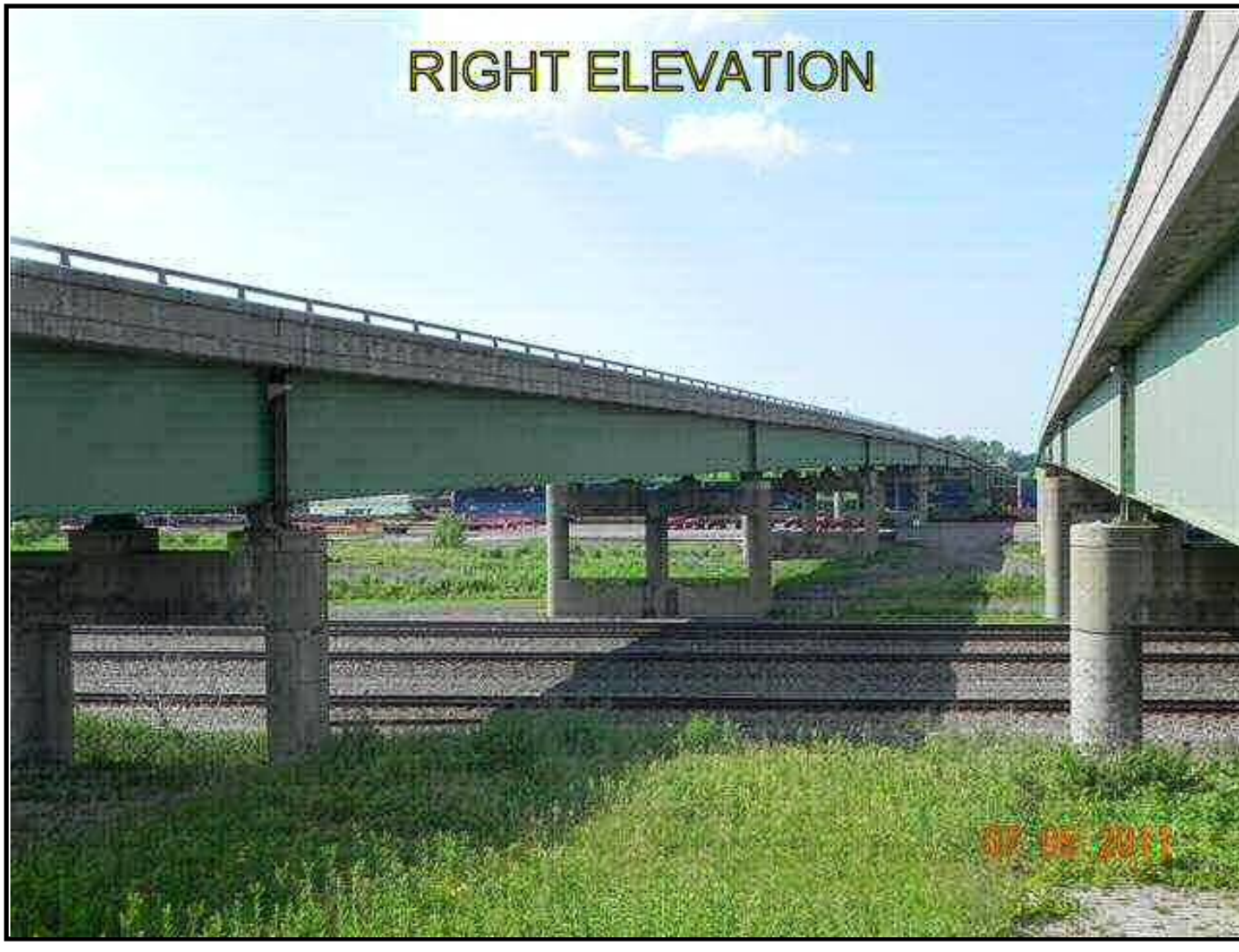

Standard Photos **RC: 33 BIN: 1093571**

Carried: 481I 481I33012069 Crossed: CSX TRANS/AMTRAK

Underside11.jpg



LEVEL 1 LOAD RATING SUMMARY SHEET

Region/County Region 3/Onondaga BIN 1093571
Feature(s) Carried and Crossed I-481 Southbound/CSX Trans/AMTRAK
Date of field inspection upon which Level 1 rating is based 3/27/2014

OVERALL BRIDGE RATTNGS (BASED ON LOWEST RATED ELEMENTS):

Total number of rating units 1

	H inventory	H operating	HS inventory	HS operating
Rating	H 20.78 (tons)	H 34.70 (tons)	HS 37.40 (tons)	HS 62.46 (tons)
Lowest rated element	Interior Girder G2, G3 (Span 4, 5, 6)	Interior Girder G2, G3 (Span 4, 5, 6)	Interior Girder G2, G3 (Span 4, 5, 6)	Interior Girder G2, G3 (Span 4, 5, 6)

Analysis method LFR Comments

Individual Rating Unit Level 1 values:

Rating unit span(s) 1

Main member ratings

	H inventory	H operating	HS inventory	HS operating
Rating	H (tons)	H (tons)	HS (tons)	HS (tons)
Lowest rated element				

Analysis method Comments

Floorbeam ratings

	H inventory	H operating	HS inventory	HS operating
Rating	H (tons)	H (tons)	HS (tons)	HS (tons)
Lowest rated element				

Analysis method Comments

Stringer ratings

	H inventory	H operating	HS inventory	HS operating
Rating	H 20.78 (tons)	H 34.70 (tons)	HS 37.40 (tons)	HS 62.46 (tons)
Lowest rated element	Interior Girder G2, G3 (Span 4, 5, 6)	Interior Girder G2, G3 (Span 4, 5, 6)	Interior Girder G2, G3 (Span 4, 5, 6)	Interior Girder G2, G3 (Span 4, 5, 6)

Analysis method LFR Comments

Certified by Date

Quality Control Engineer Signature Date
Agency or Company represented by certifier

Note:
-If connection ratings govern, record them under stringer ratings for stringer – floorbeam connection, floorbeam ratings for floorbeam-main member connections, etc.
-When Level 1 results indicated the need for load posting or other corrective action, the NYSDOT Regional Structures Engineer shall be notified immediately.
-Load ratings should be filed in the regional office within 60 days of completion of calculations.
-Bridges shall be flagged based on Level I results in accordance with the current NYSDOT flagging procedure.
-Bridge load posting, closure, etc. determinations shall be made as results are being produced.

PARSONS

100 Broadway
New York, NY 10005
Phone: 212-266-8300
Fax: 212-571-6825
www.parsons.com

TECHNICAL MEMORANDUM

FROM: Kian Siang Chau, P.E
NYSPE 082744

DATE: JUNE 10, 2014

RE: SEISMIC SCREENING SUMMARY
NEW YORK STATE DEPARTMENT OF TRANSPORTATION
D031085; PIN 3501.60; I-81

BIN: 1093571 (I-481 Southbound / CSX Trans/Amtrak)

This memorandum summarizes the seismic screening conducted for BIN 1093571 as part of the Interstate 81 Project in Syracuse, NY. The purpose of the screening is to determine if seismic retrofits are warranted at the superstructure to substructure connection, and if further seismic evaluation of the structure is required. This memorandum will give the screening results, retrofits required and recommendations for further seismic evaluation of the structure.

SCREENING PROCEDURE

The seismic screening was performed in accordance with the FHWA Seismic Retrofitting Manual for Highway Structures: Part 1 - Bridges, January 2006. As per the referenced manual, seismic screenings were performed for both lower level and upper level earthquake ground motion. The lower level earthquake ground motion has a reasonable likelihood of occurrence within the life of the bridge (50% probability of exceedance within a 75 year bridge life). The upper level earthquake ground motion has a finite likelihood of occurrence within the life of the bridge (7% probability of exceedance within a 75 year bridge life).

Values for the spectral acceleration for the Syracuse area used in the screening are as follows:

- Lower Level Earthquake Ground Motion for a Short Period (0.2 seconds): $S_S = 0.0251$
- Lower Level Earthquake Ground Motion for a Long Period (1.0 seconds): $S_1 = 0.0076$
- Upper Level Earthquake Ground Motion for a Short Period (0.2 seconds): $S_S = 0.139$
- Upper Level Earthquake Ground Motion for a Long Period (1.0 seconds): $S_1 = 0.047$

These values are considered constant and are the same for all seismic screenings of bridges in the Syracuse area.

The Site Class is based on the soil conditions at the bridge location. It was determined that this parameter has little effect on the results of the seismic screening because the spectral acceleration values for the Syracuse area are small. Based on this, a site class of D was used for all seismic screenings of bridges in the Syracuse area.

Bridge parameters used in the seismic screening were retrieved from the record drawings and WinBolts data.

The seismic screening takes into account the anticipated service life, importance, and the seismic exposure of the bridge to determine a seismic retrofit category (SRC). The SRC is then used to determine seismic evaluation methods and retrofit measures. There are four SRCs, A through D. Seismic retrofit category A is the lowest category; bridges in this category do not require retrofits or further seismic evaluation. Seismic retrofit category D is the highest category; bridges in this category requiring the most rigorous seismic evaluations and retrofits.

SCREENING RESULTS

The SRC for the bridge is "**C**" for lower level earthquake ground motion and "**B**" for upper level earthquake ground motion.

RETROFITS REQUIRED

Seat width improvements are required at piers. Additional retrofits may be required if further seismic evaluation is needed.

RECOMMENDATIONS FOR FURTHER SEISMIC EVALUATION

For the lower level earthquake ground motion, it is recommended that capacity/demand ratios for bridge components are calculated as per Section 5.4 of the referenced manual. For the upper level earthquake ground motion, it is recommended that the capacities of the bearings are checked as per Section 5.2 of the referenced manual.

Retrofit cost estimates will be provided after any further required seismic evaluations are completed.

BRIDGE DECK EVALUATION REPORT

RECOMMENDATIONS

The bridge deck inspection findings and evaluation are used as a tool for developing the scope of work and cost estimates for the development and comparison of alternatives for the overall project.

The total damaged area of the deck for the entire bridge averages 4% of the bridge deck surface area and varies by span ranging between 1.3% and 15.5% of the span deck surface area. The cores indicate the reinforcement steel is 4.5 inches to 5 inches below the surface of the deck. Additionally, the cores indicate the reinforcement steel is epoxy coated. The core lab tests indicate that chloride ion concentrations at the deck surface are nearly ten times higher than the corrosion threshold for steel; however, they decrease rapidly to well below threshold at a depth of 3 inches below the surface.

Due to the age, condition and high chloride ion content of the bridge deck concrete, the bridge deck should be rehabilitated or replaced to meet the current standards and to mitigate excessive future maintenance costs.

ALTERNATIVES

- Rehabilitation Alternative - 2 inches Bonded Concrete Overlay
  - Scope

    The scope of this alternative will include the complete removal of the bridge railings, parapets, and fascias to the level of the original top of the deck. The lower portion of the fascia or deck soffit is in better condition and only partial removal of damaged areas is necessary. The joints will be removed. The top 2.25 inches of the entire deck will be removed and areas of deteriorated concrete must be removed to at least 1 inch below the level of the reinforcement steel and to the horizontal and vertical limit of any detectable hollow areas. Additionally, a +/- 3 feet long portion of the concrete deck ends near the joints will be removed due to leakage and corrosion near the joints. Any corrosion of the reinforcement steel will be removed by sandblasting or hydro-blasting. Any corrosion of the reinforcement steel will be sandblasted or hydro-blasted. The proposed deck overlay will be a 2 inches thick bonded concrete overlay yielding a nominal 9.5 inches standard thickness deck. A new single-sloped concrete barrier and

new armored and armorless joint systems will be installed as appropriate. The Level 1 Load Rating for the final condition was found to be acceptable.

Useful Life Expectancy

The removal of the top 2.25 inches of the existing deck will remove the portion of the deck with the highest chloride ion concentrations. It can be anticipated that chloride ions will continue to migrate into the remaining deck to the reinforcing steel resulting in further corrosion-related deterioration of the deck surface. However, the rate of migration can be significantly reduced with the removal of the top of the deck with the highest chloride ion concentration of chloride ions. Additionally, concrete admixtures will be included in the bonded concrete overlay to impede the continued penetration of chloride into the deck from the surface. This alternative will result in an extended useful life expectancy estimated at 20 years.

The design life of the project is 30 years (ETC + 30). This alternative does not meet the project objectives of obtaining 30 years of service life and is not evaluated further.

- Rehabilitation Alternative - 3 inches Bonded Concrete Overlay
  - Scope

    The scope of this alternative is similar to the 2 inches Bonded Concrete Overlay except the top 3.25 inches of the entire deck will be removed. This additional depth of concrete removal would bring the chloride concentrations of the remaining deck to well below the corrosion threshold for steel. Areas of deteriorated concrete will be removed to at least 1 inch below the level of the reinforcement steel and to the horizontal and vertical limit of any detectable hollow areas. Additionally, a +/- 3 feet long portion of the concrete deck ends near the joints will be removed due to leakage and corrosion near the joints. Any corrosion of the reinforcement steel will be removed by sandblasting or hydro-blasting. The proposed deck overlay will be a nominal 3 inches thick bonded concrete overlay yielding a 9.5 inches standard thickness deck. A new single-sloped concrete barrier and new armored and armorless joint systems will be installed as appropriate. The Level 1 Load Rating for the final condition was found to be acceptable.
  - Useful Life Expectancy

    A concrete overlay will not completely prevent chlorides from penetrating through the overlay itself and into the structural deck, however, concrete admixtures will be included in the bonded concrete overlay to impede the penetration of chloride into the deck. This alternative will result in an extended useful life expectancy estimated at 30 years.

- Cost Estimate

  The estimated cost for this alternative is $6,097,000. The Engineer's Opinion of Probable Construction Cost worksheet is at the end of this section.

- Rehabilitation Alternative – 100% Deep Removal and Partial Deck Reconstruction
  - Scope

    The scope of this alternative will include the complete removal of the bridge railings, curb and safety walks, and fascias to the level of the original top of the deck. The lower portion of the fascia or deck soffit is in better condition and only partial removal of damaged areas is necessary. The joints will be removed. The scope of this alternative will include partial depth reconstruction with removal of the concrete to at least 1 inch below the top mat of the reinforcement steel. Additionally, any further areas of deteriorated concrete detected will require full depth removal. Any corrosion of the reinforcement steel will be removed by sandblasting or hydro-blasting. The proposed deck partial reconstruction will be a nominal 6 inches thick concrete deck yielding a 9.5 inches standard thickness deck. A new single-sloped concrete barrier and a new armorless joint will be installed. The Level 1 Load Rating for the final condition was found to be acceptable.
  - Useful Life Expectancy

    This alternative will provide a useful life expectancy is estimated at 35 years.
  - Cost Estimate

    The estimated cost for this alternative is $7,551,000. The Engineer's Opinion of Probable Construction Cost worksheet is at the end of this section.

- Replacement Alternative – Cast-In-Place Concrete
  - Scope

    This scope of this alternative will include the complete demolition of the existing bridge deck, railings, parapets, fascias and bridge joints. The bridge deck will be replaced with a new 9.5 inches standard thickness concrete deck. A new single-sloped concrete barrier and a new armored and armorless joints will be installed as appropriate. The Level 1 Load Rating for the final condition was found to be acceptable.
  - Useful Life Expectancy

    This alternative will provide a useful life expectancy is estimated at 40+ years.
  - Cost Estimate

The estimated cost for this alternative is $8,319,000. The Engineer's Opinion of Probable Construction Cost worksheet is at the end of this section.

- Replacement Alternative – Pre-cast Concrete Deck Panels
  - Scope

    The scope of this alternative is similar to the Cast-In-Place Concrete Deck Replacement Alternative except the deck structure will be precast panels. This alternative offers reduced construction time over conventional construction.
  - Useful Life Expectancy

    This alternative will provide a useful life expectancy is estimated at 40+ years.
  - Cost Estimate

    The comparison of accelerated construction to conventional construction is beyond the current scope of this evaluation.

IN-DEPTH INSPECTION REPORT

D031085 P.I.N. 3501.60

ELEMENT SPECIFIC BRIDGE WORK

B.I.N. 3/3 1093572

TEAM LEADER George H Stam, P.E. 056216
NYSPE LICENSE #

ASSISTANT TEAM LEADER Timothy Olmstead

TEAM LEADER Andrew P. Thompson 84914
NYSPE LICENSE #

ASSISTANT TEAM LEADER Mike Savino

FEATURE CARRIED I-481 Northbound

FEATURE CROSSED CSX TRANS/AMTRAK

DATE FIELD WORK BEGAN 2/10/14

DATE FIELD WORK COMPLETED 3/25/14

TABLE OF CONTENTS

- STRUCTURE IDENTIFICATION
- INTRODUCTION
- PROJECT LOCATION MAP
- IN-DEPTH CONDITION DOCUMENTATION
- PLANS & SKETCHES
- IN-DEPTH PHOTO DOCUMENTATION
- ASBESTOS SAMPLING SURVEY
- LATEST BIENNIAL INSPECTION REPORT

STRUCTURE IDENTIFICATION

a.	Bridge Identification Number (BIN):	3/3 1093572
b.	Reference Marker:	481I 3301 2069
c.	Region:	NYSDOT Region 3
d.	County:	Onondaga
e.	Town:	Dewitt
f.	Feature Carried:	I-481 Northbound
g.	Feature Carried:	CSX TRANS/AMTRAK
h.	Orientation:	Northwest

INTRODUCTION

a. Bridge History

i.	Year Built:	1972
ii.	Bridge Type:	15 Span, Steel Multi-girder
iii.	Stucture Length:	Span 1 – 85 feet Span 2 – 156 feet – 2 Inches Span 3 – 171 feet – 2 Inches Span 4 – 198 feet Span 5 – 198 feet Span 6 – 198 feet Span 7 – 124 feet Span 8 – 124 feet Span 9 – 124 feet Span 10 – 124 feet Span 11 – 124 feet Span 12 – 124 feet Span 13 – 124 feet Span 14 – 124 feet Span 15 – 124 feet
iv.	Out-to-Out Width:	37 feet – 6 Inches
v.	Skew Angle:	9°
vi.	Structural Ratings and Rankings	
	1. Federal Sufficiency:	74.7 (July 2013)
	2. Condition Rating:	4.444 (July 2013)
	3. General Recommendation:	5 (July 2013)
vii.	Live Load Posting (HS25):	No

viii.	National Highway System (NHS):	Yes
ix.	Previous work Done:	1987 – Replace wearing surface (asphalt concrete overlay) with concrete overlay 1991 – Clean and paint metal surfaces 1998 – Asbestos testing 1999 – Waterproofing bridge deck and corrosion inhibitor 2003 – Repair structural bridge deck 2007 – Repair structural bridge deck 2008 – Repair structural bridge deck
x.	Planned Future Work:	N/A

b. Highway Classification

i. Functional Classification: Urban Principle Arterial - Interstate

ii. Traffic Volumes

YEAR	AADT
2014	25201
2034	37448
2054	55645

c. Plan for Maintenance and Protection of Traffic:
Maintenance and Protection of traffic will be achieved by staged construction involving a crossover detour with the southbound parallel bridge BIN 1093571.

PROJECT LOCATION MAP



IN-DEPTH CONDITION DOCUMENTATION

FEATURE CARRIED:	**I-481 NORTHBOUND**	**TEAM LEADERS:**	**G. STAM & A. THOMPSON**
FEATURE CROSSED:	**CONRAIL**	**ASSIST.TEAM LEADERS:**	**T. OLMSTEAD & M. SAVINO**

REMARKS

GENERAL NOTE

Popli Design Group performed an In-depth Inspection of the I-481 Northbound bridge over Conrail - BIN 3/3 1093572. The field work began on 2/10/2014 and was completed on 3/25/2014. The inspection teams and their respective elements inspected are as follows:

- Inspection team of A. Thompson, P.E. - Team Leader; and M. Savino – Assistant Team Leader
  - underside elements:
    - begin abutment
    - piers 1 thru 10
    - superstructure span 1 thru span 10
    - fascias span 1 thru span 15
- Inspection team of G. Stam, P.E. – Team Leader; and T. Olmstead – Assistant Team Leader
  - topside elements:
    - begin abutment
    - deck span 1 thru span 15
    - superstructure span 1 thru span 15
    - end abutment
  - approach pavement and drainage near the bridge
  - underside elements:
    - piers 11 thru 14
    - superstructure span 10 thru span 15
    - end abutment

BEGIN ABUTMENT ITEMS

Begin Abutment - Joint with Deck:
The begin joint with deck is armored compression seal type (Photo 1). The armor angle is 1 inch wide and in good condition. The seal appears in good condition from above. There are concrete headers. The begin side header has a minor spall near centerline, a pattern of cracks at 1 foot to 3 foot intervals in the left lane (Photo 2) and a transverse crack in the right lane and right shoulder (Photo 3). Below, no signs of significant leakage were noted (Photos 4 and 5).

Begin Abutment – Bearings:
The begin bearings are expansion high rockers. Their position is close to neutral (Photo 6). The bearings are in good condition with some peeling paint and surface rust.

Begin Abutment - Seat and Pedestals:
There are stub abutments, therefore no seat. The pedestals are in good condition (Photo 5).

Begin Abutment – Backwall:
The backwall is in good condition with only isolated map cracking (Photo 4).

Begin Abutment – Stem:
There are stub abutments, therefore no stem.

END ABUTMENT ITEMS

End Abutment - Joint with Deck:
The end bearings are fixed. The steel armor at the end header was removed in 2003. There is no joint visible from the top and only a concrete transition header (Photo 7).

End Abutment – Bearings:
The end bearings are fixed and in generally good condition.

REMARKS

End Abutment - Seats and Pedestals:
There are stub abutments, therefore no seat. The top left and all three sides of pedestal P1 are hairline cracked (Photo 8). The top right has a crack emanating from the bearing anchor bolt and wraps down the right side (Photo 9). The anchor bolt is sound. The remaining pedestals are in good condition with no significant cracks or hollow areas detected.

End Abutment – Backwall:
There is tight hairline mapcracking with efflorescence throughout (Photo 10). At the left side of bay 2, there is a full height vertical crack with efflorescence (Photo 11). At the top of the right fascia bay, there is seepage down the backwall and mapcracking with efflorescence (Photo 12). The right cheek wall is cracked and stained with an 8 inches wide x 2 feet high x 1 inch deep spall (Photo 12).

End Abutment – Stem:
There are stub abutments, therefore no stem.

APPROACH ITEMS
Approach Drainage:
At the begin approach, the asphalt pavement along the curbline near the deck is slightly higher than the deck header trapping runoff and causing shallow ponding along the shoulders (Photos 13 & 3). Below, no signs of significant leakage were noted (Photos 4 and 5). There are no significant drainage issues evident at the end approach to the bridge.

Approach Settlement:
There is 0.5 inch of rutting of the asphalt pavement in the wheel paths of both lanes at the begin approach (Photos 1 & 14). There is no significant settlement at the end approach.

Approach Pavement:
The asphalt pavement at the begin approach is transverse cracked adjacent to the concrete joint header (Photo 1). At the end approach, the asphalt pavement adjacent to the bridge is transverse cracked and raveled with up to 4 inches wide x up to 2 inches deep potholes along the concrete headers. (Photo 7)

DECK ITEMS
Deck - Wearing Surface:
All Spans: The ride quality of the deck is generally smooth except at several poorly patched areas where the patches are not flush with the adjacent deck surface (Photo 15). The wearing surface has transverse traction grooving that is worn smooth in the wheel paths in most spans (Photo 16).

Deck - Curbs:
All Spans: There are sloped face granite curbs embedded in the single sloped concrete parapets on both sides of the bridge. Generally, the curbs are in good condition. The only defects noted are:
- scattered locations where there is loose or missing mortar at the curb joints (Photo 17); and
- a 6 inches wide x 6 inches high missing piece of curb at the bottom right edge of the span 4 joint (Photo 18).

The original curb reveal was installed at 15.5 inches reveal. The average curb reveal for each span is as follows:

CURB REVEAL by SPAN	
Span No.	Curb Reveal (inches)
1	14.0
2	14.0
3	14.0

REMARKS

4	14.0
5	14.25
6	14.25
7	14.0
8	13.75
9	14.0
10	14.0
11	14.0
12	13.75
13	14.25
14	14.25
15	14.0

Deck – Sidewalks and Fascias:
Sidewalks – There are no sidewalks or safety walks on the bridge.

Fascias –
Typically, both fascias in all spans have scattered hairline cracking and staining throughout (Photo 19). There are scattered locations of cracks, staining, delaminations and spalls. Significant locations are noted below:

- Span 3 begin left fascia – at the begin above pier 2, the concrete is severely deteriorated with spalling 3 feet long x up to 6 inches deep with exposed reinforcement and crumbly concrete (Photo 20).
- Span 4 begin left fascia – at the begin above pier 3, the concrete is severely deteriorated with spalling 3 feet long x up to 6 inches deep with exposed reinforcement and crumbly concrete (Photo 21).
- Span 5 begin left fascia – at the begin above pier 4, the concrete is severely deteriorated with spalling 4 feet long x up to 6 inches deep with exposed reinforcement and crumbly concrete (Photo 22).

Deck – Railings and Parapets:
Railings - There is 3 square inch galvanized railing mounted on posts anchored on top of the concrete parapets (Photo 23). The anchor plates on the Span 2 left Posts 5 and 7 are slightly undermined due to parapet spalling (Photos 24 and 25). The railing is solid at these locations and the anchor bolts have sufficient embedment depth. The remainder of the railings are in good condition.

Parapets - In 2003, the concrete parapets received partial concrete repairs primarily to the top and top half of the inside face. The parapets exhibit extensive horizontal cracking with minor spalling along the cracks and scattered locations of staining of the inside face at 3 inches to 6 inches below the top of the parapet (Photo 26). Also, in the repair areas, there are locations of vertical cracking and scattered staining (Photo 23 & 17). The outside faces are also typically cracked with scattered locations of staining (Photo 27).

There are scattered areas of more extensive cracking, delamination and spalling with exposed reinforcement as noted below:

- Span 2 left – 1/3 span: 9’ long x 3.5” deep spall on top outside corner with exposed rebar (Photo 24); midspan: 11’ long x 3.5” deep spall on top outside corner with exposed rebar– (Photo 25). Loose chunks of concrete over the railroad tracks below were removed during this inspection.
- Span 4 left near 2/3 span – a location of severe cracks and a +/-3 feet long x up to 12 inches high x 2 inches deep spall on the inside top edge (Photo 28).
- Span 9 left near end span – spalled 2 feet long x 6 inches high x up to 2 inches deep along the inside top edge.
- Span 9 right near begin span – several pop-out spalls along the inside face. The worst is 6 inches in diameter x 1.5 inches deep with staining of the concrete below railing post #2 (Photo 29).
- Span 10 right near 1/3 span – several locations with 2 feet to 3 feet long x 8 inches high x 2.5 inches deep spalls along the inside top edge with exposed rusted reinforcement that is mostly bonded (Photo 30).
- Span 11 left near midspan – 1.5’ long x 1’ high x 2” deep spall at top outside corner (Photo 31).

REMARKS

- Span 14 left – 5' from begin: 1' dia. x 2" deep spall on outside face with horizontal cracking (Photo 32); near 1/3 span: 2' long x 3.5" deep spall on top outside corner with exposed rebar (Photo 33).
- Span 14 right near ¼ span – spalled 1 foot long x 3.5 inches deep x full width across the top and 2 feet long x 4 inches high x 2 inches deep along the inside edge (Photo 34).

SUPERSTRUCTURE ITEMS

Structural Deck:
Record plans indicate the original structural deck is 8 inches thick concrete mono-deck. SIP forms were used. Records indicate the deck was repaired, the surface was scarified and it received a 1.5 inch minimum concrete overlay in 1987. Curb reveal measurement would indicate a nominal existing deck thickness of 9.5 inches to 9.75 inches.

Top of Deck – There is extensive cracking with scattered hollow areas throughout as illustrated in the Top of Deck Deterioration Sketch. The deck in all spans except span 5 has tight mapcracking throughout except in concrete patched areas (Photo 35). The condition of patched areas is variable from good condition to poor condition with extensive cracking and spalling dependent upon the type of patch material used and quality of the patch. Many of the cracks and patched areas have been sealed with an epoxy or latex sealant (Photos 36 & 13). The total hollow and spalled area; and percent of deteriorated span surface are noted in the table below:

DECK DETERIORATION QUANTITIES

Span No.	Deteriorated Area (square foot)	Percent of Deteriorated Area
1	171.3	5.9
2	1113.3	21.0
3	1179.0	20.3
4	576.5	8.6
5	1.0	0.1
6	570.5	8.5
7	28.5	0.7
8	260.0	6.2
9	89.8	2.1
10	196.0	4.7
11	519.0	12.3
12	609.0	14.4
13	280.3	6.7
14	345.5	8.2
15	290.0	6.9
Total	6229.5	8.6

Significant locations of deterioration are noted below:

- Span 1 left lane – severely cracked with hollow areas throughout (Photo 36).
- Span 1 right lane – severely cracked with hollow areas near 1/3 span (Photos 37 & 38).
- Span 1 both lanes – there are rough patchwork repairs near the begin with cracking and shallow spalling along the perimeter of the patches (Photos 39 & 40).
- Span 2 left lane – extensive severe cracking with hollow sounding areas throughout the span.
- Span 2 right lane – scattered cracking and hollow areas.
- Span 3 left lane – extensive severe cracking with hollow sounding areas throughout the span.
- Span 3 right lane – scattered cracking and hollow areas.
- Span 4 left lane – heavy cracking and hollow areas in the end 2/3 span.

REMARKS

- Span 5 near end – 6 feet long x 1/8 inch wide crack at a construction joint near centerline (Photo 41).
- Span 5 right at span 4 joint – a 12 inches long x 12 inches wide x full deck depth spallbelow the curb at the far right edge of the span 4 joint with exposed debonded reinforcement (Photos 18 & 42).
- Span 6 both lanes – heavy cracking with hollow areas throughout.
- Span 6 left lane – patched area with cracks and 1 inch to 2 inches wide x 1 inch deep spalls along the cracks and along the edges of the patch (Photo 43).
- Span 7 right lane – scattered cracking and hollow areas.
- Span 8 both lanes – extensive transverse cracking throughout with hollow areas in the end half span.
- Span 9 both lanes – extensive transverse cracking throughout.
- Span 10 both lanes – extensive transverse cracking throughout.
- Span 11 both lanes – heavy cracking and hollow areas throughout.
- Span 12 left lane – severely cracked area throughout with a longitudinal crack in the left wheel path. Extensive hollow area in the end half span.
- Span 13 left lane – severely cracked with hollow areas throughout. There are rough patchwork of repairs near the end with cracking and shallow spalling along the perimeter of the patches (Photos 15 & 44).
- Span 13 right lane – moderately cracked with a patchwork of repairs in the end ½ span. Many of the patches are deteriorated with cracks and 1 inch to 2 inches wide x 1 inch deep spalls along the patch edges and cracks. The worst is near 2/3 span with a 2 feet long x 2 feet long x 2 inches deep spalled area (Photo 45).
- Span 14 left lane – extensive longitudinal cracking with scattered hollow areas in the begin ¼ and end ¼ spans (Photos 46 & 47).
- Span 15 both lanes – scattered transverse cracks and hollow areas throughout.

Underdeck – There are stay-in-place forms at the underside of the deck throughout (Photo 48). Typically, at the ends of the deck at the joints there is rusting of the SIP's indicating leakage of the joints or seeping at the headers (Photo 49). In each span, there is a 2.5 feet length of SIP that has been removed for inspection at the time of construction. Typically, the exposed deck and surrounding forms in these areas were in good condition except in span 13 girder bay 1 near the end where there was rusting at the edges of the SIP forms and transverse cracking with efflorescence (Photo 50). Additionally, there was rusting of the SIP forms along the top flanges of the interior girders in Span 12 near 2/3 span and near the end of span 13 indicating leakage through the deck (Photo 51).

Primary Members:
Generally, the primary members are in good condition with only surface rusting where the paint has blistered or peeled. More extensive peeling and blistering of the paint; and localized corrosion of the steel at the girder ends is evident near leaky superstructure joints. There is section loss to the bottom outside (left) web above the bearing to Girder 1 in Span 15 at the end (Photos 52 & 53). There is a 2 inches high band of corrosion above the bottom flange immediately to the begin of the outside web stiffener. Section loss readings taken by "D" meter show up to 53% percent localized section loss over a length of +/-3 inches. There are no significant section losses of the bearing stiffeners or inside of the web. Total section loss is 4% of the section above the bearing. There was no warping, crushing or other distortion evident at above the bearing.

Secondary Members:
Generally, the secondary members are in good condition with only surface rusting where the paint has blistered or peeled. More extensive peeling and blistering of the paint; and corrosion of the secondary member steel has occurred near leaky superstructure joints. Significant locations are noted below:

- Span 3 G2 – the bottom left gusset plate at the second last diaphragm is buckled and bowed upwards +/-1" (Photo 54). No cracks were found.
- Span 1 at end and Span 2 at begin – Rust, delamination, and +/-20% section loss to end diaphragm bottom chords and bottom gusset plates (Photo 55).
- Span 7 – bay 2 begin diaphragm – bottom chord angle deflected toward end 8" (Photo 56). Connections to the girders are intact. No cracks were found.

REMARKS

Paint:
The paint system is failed on 10% of the surfaces of the girders and diaphragms. There is cracking and peeling of the paint on the bottom flanges and scattered locations on the girder webs (Photo 57). The top of the outside bottom flanges are worst with 50% of the surface having blistered and peeling paint (Photo 58). There is 50% to 100% paint failure on end diaphragms and diaphragm gusset plates where leaky joints exist (Photo 55). There is surface rusting where the paint has peeled or blistered.

Joints:
There are three types of pier joints on the bridge. Spans 1, 2, 3, 4, & 5 are either 2.5 inch wide, or 11 inches x 6 inches wide steel angle armored open joints with below deck gutter system. Spans 6 thru span 14 are 1 inch wide steel angle armored compression seal joints. All joints appeared in generally good condition from above. Span 1 and the left lane of span 2 joints have elastomeric concrete headers. The span 1 begin side header is cracked in the wheel paths (Photo 59). The span 2 header in the right lane has a 1 foot to 3 feet wide pattern of cracking (Photo 60). The below deck joint gutters in Spans 1, 2, 3, 4, and 5 are filled with debris (Photo 61). The right side gutter system at the span 4 joint is leaking on the substructure elements below (Photo 62). The supports for the gutters have rust with minor section loss but are functioning properly (Photo 63). Typically, the steel angles and plates on the underside of the joints are heavily rusted with section loss and holes. The joints in Spans 6 thru 14 have their steel angles rusted away underneath exposing the underside of the headers which are moderately to heavily spalled throughout their lengths (Photos 64, 65, 66 and 67). At span 12 joint, the compression seal is leaking beneath the right curbline and leaking on the substructure elements below (Photo 68). At span 14 joint, the compression seal is leaking beneath the left curbline and leaking on the substructure elements below (Photos 69 & 70).

PIER ITEMS
Pier Bearings:
The begin row of bearings on each pier is fixed, and the end row is expansion. Typically, the bearings have peeling and blistering paint with light to heavy corrosion. The expansion bearings are high rockers and the typical condition is light to heavy pack rust with neutral to normally contracted rockers and some displacement at temperatures of 35° F to 4°F at the time of inspection. Specific conditions are noted as follows:

PIER HIGH ROCKER BEARING DATA

Pier No.	Bearing	Temp. (° F)	Tilt Angle (Degrees)	Tilt Direction	Rocker Displacement (Inch)	Rocker Displacement Direction	"X" Dimension (min. dist. between girders)	Photo No.
1	2 (1,3,4 Typ)	14	8.3	Contracted	0.25	Contracted	15.0	71
2	1	4	7.2	Contracted	0.5	Contracted	15.0	72
3	3	7	6.6	Contracted	0.5	Expanded	15.0	73
4	1	17	8.8	Contracted	0.5	Expanded	14.5	74
5	1	20	Not Taken		0.25	Contracted	Not Taken	75
6	1(3 less severe)	20	Not Taken		0.5	Contracted		76
6	2 (4 Typ)	10	7.7	Contracted	None		13	77
7	1	10	5.5	Contracted	0.25	Expanded	8.5	78
8	3 (1 and 2 Typ)	25	6.1	Contracted	None		8	79
8	4	25	7.7	Contracted	None		9	80
12	2	35	5.6	Contracted	None		8.625	81
13	3	35	5.6	Contracted	None		8.625	82

REMARKS

The bearing with the worst tilt condition was Pier 4 Bearing 1 (Photo 74). The tilt angle was 8.8° at 17°F. The allowable angle of tilt is 13.75° given the rocker should bear on the masonry plate within the middle 50% of the arch of the rocker. Several rockerswere displaced by 0.25 to 0.5 inches indicating the bearing is frozen and the rocker is "walking" rather than rotating or rocking. Displacement measurements were recorded at Piers 1-7. All of the rockers were entirely inside the masonry plate area.

Pier – Pedestals:
The pedestals had locations of cracked, hollow, and spalled concrete as illustrated on the Pier Deterioration Sketches. Significant areas are noted below:

- Pier 4 pedestal P2 – 1.4 square foot x 5" deep spall with exposed rebar on begin face at top left (Photo 83). The spall does not undermine the bearing.
- Pier 5 pedestal P3 – right face at top has 3' long x 3" deep spall with exposed rebar (Photo 84). The remainder of the face is hollow. The begin face has 0.5 sf of hollowness and the end face has 1 sf of hollowness.
- Pier 5 pedestal P4 – full height x 2.5' long x 3" deep spall at begin right with exposed rebar (Photo 85).
- Pier 10 pedestal P4 – begin face at the top has a 6" x 3" x 1.5" deep spall.
- Pier 11 pedestal P1 – the left side is cracked with staining and 3 square foot area of hollow sounding concrete (Photo 86). The begin face and right side are cracked with 7 square foot area of hollowness (Photo 87).
- Pier 12 pedestal P1 – the end left is cracked 3 inches to 4 inches below the top edge (Photo 88). The begin face is similar.
- Pier 12 pedestal P4 – The right side is cracked (Photo 89). The begin face is cracked and has 2 square foot of hollowness (Photo 90); the end face is cracked with 1 square foot of hollowness.
- Pier 13 pedestal P1 – begin left top edge is cracked with 1 square foot of hollow sounding concrete (Photo 91).
- Pier 13 pedestal P3 – begin left side is cracked with 3 square foot of hollow sounding concrete (Photo 92).
- Pier 14 pedestal P1 – the left side and left half of the top are cracked with 2 square foot area of hollowness (Photo 93).
- Pier 14 pedestal P4 – the begin face is cracked with staining and 1 square foot area of hollowness (Photo 94).

Pier – Cap Beam:
The pier cap beam had locations of cracked, hollow, and spalled concrete as illustrated on the Pier Deterioration Sketches. Significant areas are noted below:

- Pier 5 near column 3 – 5" deep spall at begin bottom corner with exposed rebar (Photo 95). The spall measures 17" high x 5' long on the begin face and 20" wide x 5' long on the bottom face; bottom face in this area is hollow for 4 square feet and cracked with efflorescence for 6 square feet.
- Pier 13 end right side – cracked with 8.5 square foot of hollowness and a 1 foot high x 2 feet long x 1.5 inches deep diagonal spall (Photo 96).
- Pier 14 begin right side – cracked with 8.5 square foot of hollowness (Photo 94).

Pier – Stem:
There are crash walls which are rated as pier stems at piers 2, 3, & 4. The pier stems at these piers had locations of cracked, hollow, and spalled concrete as illustrated on the Pier Deterioration Sketches. Significant areas are noted below:

- Pier 3 – 5.1 square foot x 2.5" deep spall with exposed rebar on the begin face under Column 3 (Photo 97).
- Pier 4 – 15' long x 13" deep spall with exposed debonded rebar on the end top corner at the right (Photo 98). The remainder of the stem has 42 square feet of hollowness and locations of vertical cracking and tight map cracking.

REMARKS

Pier – Columns:
The pier cap beam had locations of cracked and hollow concrete as illustrated on the Pier Deterioration Sketches. Significant areas are noted below:

- Pier 5 column C1 – (5) spalls totaling 24.3 square feet (Photo 99). The spalls are mostly 3" deep and have exposed rebar.
- Pier 5 column C3 –11.5 square foot x 3" deep spall with exposed rebar on the right face at mid height (Photo 100).
- Pier 12 column C3 – the begin right side is cracked with 20 square foot area of hollowness (Photo 101). The right side of column C3 is cracked with staining and the end face is cracked with 24 square foot of hollowness (Photo 102).
- Pier 14 column C3 – the right side has vertical cracks with 5 square foot of hollowness; and the end left has 5 square foot area of hollowness (Photos 103 & 104).

Pier – General Concrete Condition:
There is scattered cracking with locations of hollow areas and spalled concrete throughout as illustrated in the Pier Deterioration Sketches. The total hollow and spalled area; and percent of deteriorated pier concrete surfaces are noted in the table below:

PIER CONCRETE DETERIORATION QUANTITIES

Pier No.	Deteriorated Area (square foot)	Percent of Deteriorated Area
1	8.3	0.8
2	59.8	3.3
3	29.1	1.6
4	106.8	5.9
5	89.4	5.9
6	14.4	0.9
7	22.7	1.7
8	29.9	2.3
9	12.1	0.9
10	16.9	1.4
11	45.25	3.6
12	62.8	5.4
13	25.1	2.4
14	44.7	4.8
Total	567.3	2.9

UTILITIES ITEMS
Lighting:
None.

Sign Structure:
None.

Utilities and Support:
None visible.

SPECIAL EMPHASIS ITEMS
Special Emphasis Inspection Required

- Non-Redundant/Fracture Critical Members – No

REMARKS

- Pin and Hangers – No
- Fatigue-Prone Welds – Yes
- Non-Categorized Fatigue-Prone Details – No
- Other – Yes

Special Emphasis Details

- Category 'D' welds at the ends 1'-0" radius at horizontal bracing gusset plates attached to bottom (tension) flanges of all girders in Spans 2 through 6.
- High rocker bearings at the begin abutment and at piers 1 thru 14.

PLANS & SKETCHES

F.I.S.H. 70-7

FED. RD. REG. NO.	STATE	FEDERAL AID PROJECT NO.	SHEET NO.	TOTAL SHEETS
1	NEW YORK	I-890-3(28) I-481-2(118)	179	302

INTERSTATE ROUTE CONNECTION 570
BUTTERNUT INTERCHANGE (PHASE 2)
ONONDAGA COUNTY

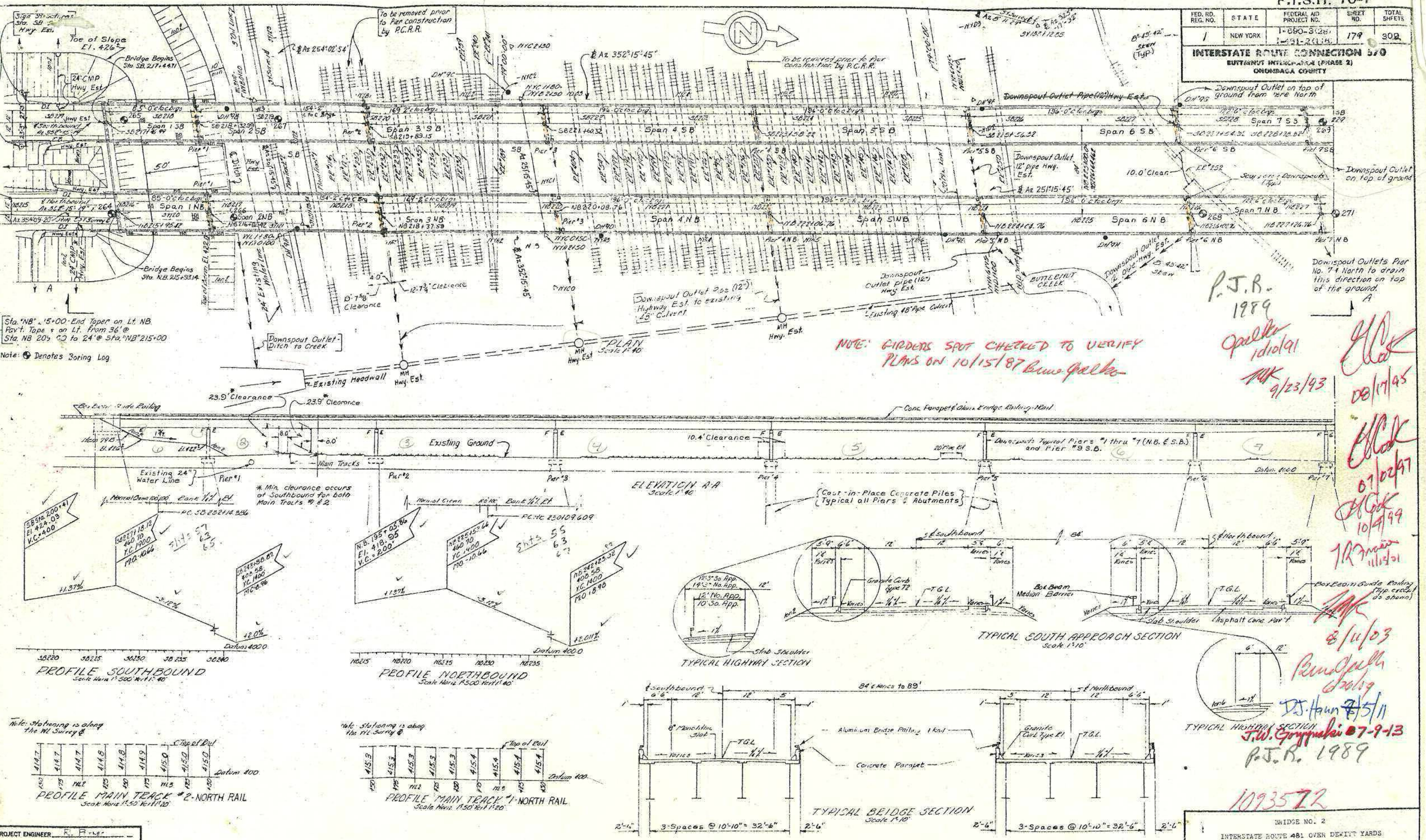

NOTE: GIRDERS SPOT CHECKED TO VERIFY PLANS ON 10/15/87 Bruce Galko

P.J.R. 1989
Galko 10/10/91
MK 9/23/93
08/17/95
07/02/97
10/4/99
11/15/01
8/11/03
6/26/09
D.J. Haun 7/5/11
J.W. Gorzynski 7-9-13
P.J.R. 1989
1093572

PROJECT ENGINEER R. Parker
IN CHARGE OF F. Eckel
DESIGNED BY
DESIGN CHECKED BY
DETAILED BY H.F. Ratta
DETAIL CHECKED BY A.E. Reinhardt

BRIDGE NO. 2
INTERSTATE ROUTE 481 OVER DEWITT YARDS

LAYOUT

DRAWING NO. 1 OF 50

F.I.S.H. 70-7

FED. RD. REG. NO.	STATE	FEDERAL AID PROJECT NO.	SHEET NO.	TOTAL SHEETS
1	NEW YORK	I-690-3(23) I-481-2(116)	183	209

INTERSTATE ROUTE CONNECTION 570
BUTTERNUT INTERCHANGE (PHASE 2)
ONONDAGA COUNTY

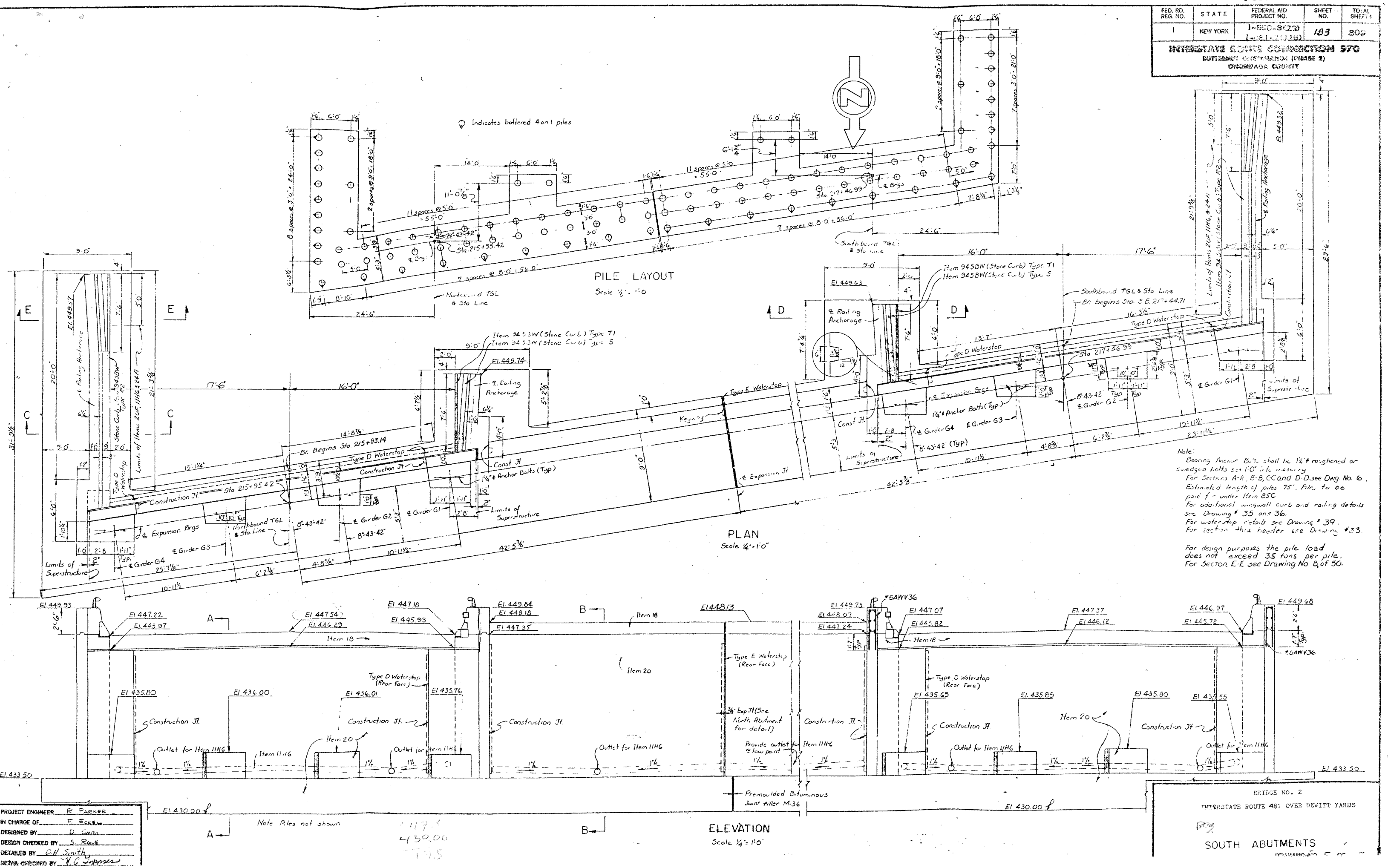

PROJECT ENGINEER R. PARKER
IN CHARGE OF F. ECKER
DESIGNED BY D. SMITH
DESIGN CHECKED BY S. ROWE
DETAILED BY O.H. Smith
DETAIL CHECKED BY W.G. Tyrrell

BRIDGE NO. 2
INTERSTATE ROUTE 481 OVER DEWITT YARDS

SOUTH ABUTMENTS

FED. RD. REG. NO.	STATE	FEDERAL AID PROJECT NO.	SHEET NO.	TOTAL SHEETS
1	NEW YORK	I-690-3(28) I-481-2(116)	184	309

INTERSTATE ROUTE CONNECTION 570
EASTBOUND ENTRANCE (PHASE II)
ONONDAGA COUNTY

FOOTING REINFORCEMENT PLAN
Scale: 1/8" = 1'-0"

EXTERIOR SIDEWALK OVERLAY
Scale: 1/4" = 1'-0"

MALL WALL OVERLAY
Scale: 1/4" = 1'-0"

EXTERIOR SIDEWALK OVERLAY
Scale 1/4" = 1'-0"

REINFORCEMENT PLAN 1'-0" ABOVE FOOTING
Scale: 1/8" = 1'-0"

WEST INTERIOR SIDEWALK OVERLAY
Scale: 1/4" = 1'-0"
East Overlay Similar

TYPICAL BACKWALL HEADER
Scale 1/4" = 1'-0"

SECTION A-A
Scale 3/8" = 1'-0"

SECTION B-B
Scale 3/8" = 1'-0"

SECTION C-C
Scale 3/8" = 1'-0"

SECTION D-D
Scale 3/8" = 1'-0"
Section E-E Similar except for no. & piles

Chamfer all exposed construction joints and all exposed corners one inch.

DETAIL A
Scale: 3/4" = 1'-0"

Notes: All footing reinforcement shall have a min. cover of 3" unless shown otherwise.
All other reinforcement shall have a min. cover of 2" unless shown otherwise.

BRIDGE NO. 2
INTERSTATE ROUTE 481 OVER DEWITT YARDS
SOUTH ABUTMENT DETAILS
DRAWING NO. 6 OF 50

PROJECT ENGINEER R. L. Parker
IN CHARGE OF F. Eckel
DESIGNED BY D. H. Smith
DESIGN CHECKED BY F. W. Eckel
DETAILED BY J. F. Darcy
DETAILS CHECKED BY [illegible]

F.I.S.H. 70-7

FED. RD. REG. NO.	STATE	FEDERAL AID PROJECT NO.	SHEET NO.	TOTAL SHEETS
1	NEW YORK	I-690-3(28) I-481-2(11)b	185	309

INTERSTATE ROUTE CONNECTION 570
BUTTERNUT INTERCHANGE (PHASE 2)
ONONDAGA COUNTY

Piles to be Cast-in-Place Concrete Piles, Item 85C
Estimated length of pile = 65 feet
For design purposes the pile load does not exceed 35 tons per pile.

Indicates Piles battered 4 on 1.

PILE LAYOUT
Scale : 1/8" = 1'-0"

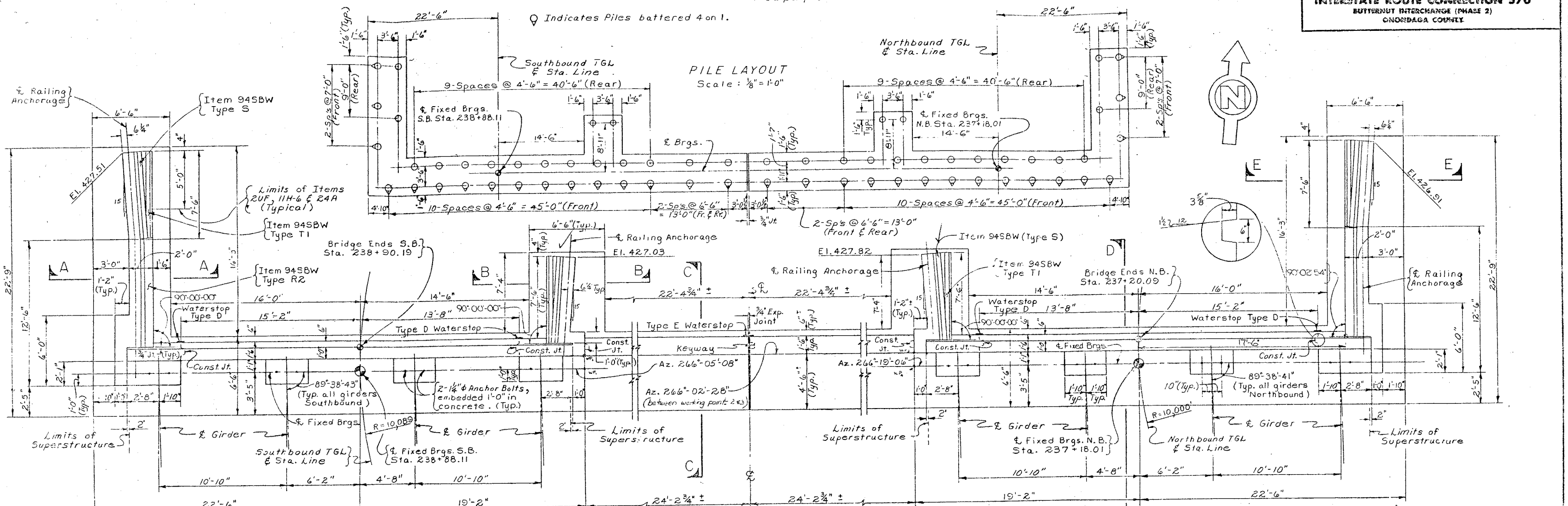

PLAN
Scale : 1/4" = 1'-0"

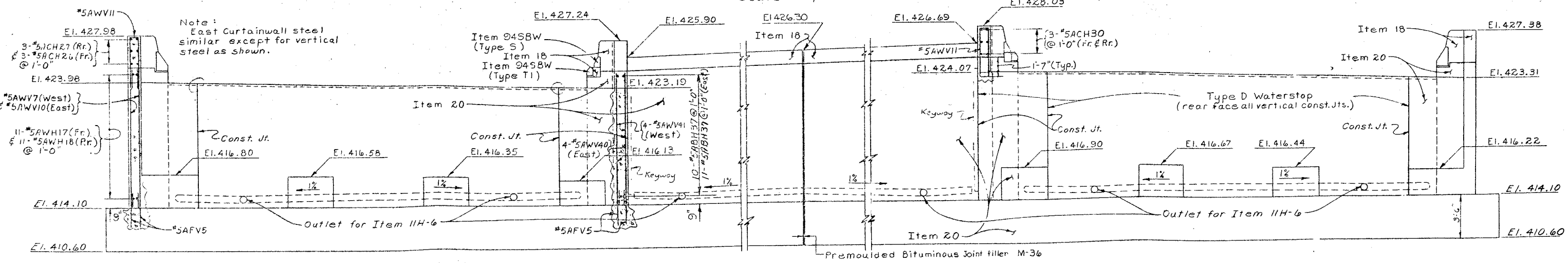

ELEVATION
Scale : 1/4" = 1'-0"

Note : Piles not shown in Elevation. Omit perforations in Item 11H-6 extension thru wall.

Note : Northwest overlays shown, Northeast similar by opposite hand.

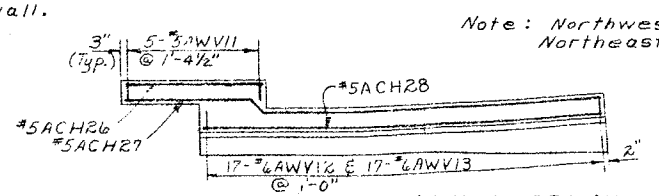

EXTERIOR SIDEWALK OVERLAY
Scale : 1/4" = 1'-0"

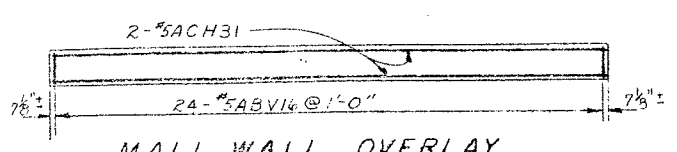

MALL WALL OVERLAY
Scale : 1/4" = 1'-0"

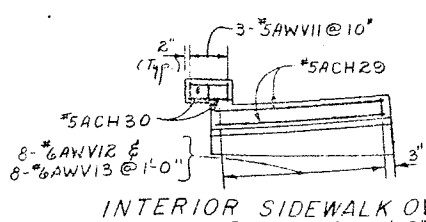

INTERIOR SIDEWALK OVERLAY
Scale : 1/4" = 1'-0"

PROJECT ENGINEER	R. Parker
IN CHARGE OF	E. Eckel
DESIGNED BY	K. P. W. & Kaul
DESIGN CHECKED BY	J. D. Sherman
DETAILED BY	J. C. Thompson
DETAIL CHECKED BY	D. H. South

BRIDGE NO. 2
INTERSTATE ROUTE 481 OVER DEWITT YARDS

NORTH ABUTMENTS

DRAWING NO. 7 OF 50

F.I.S.H. 70-7

FED. RD. REG. NO.	STATE	FEDERAL AID PROJECT NO.	SHEET NO.	TOTAL SHEETS
1	NEW YORK	I-690-3(28) I-481-2(16)	186	307

INTERSTATE ROUTE CONNECTION 370
DEWITT INTERCHANGE (PHASE 2)
ONONDAGA COUNTY

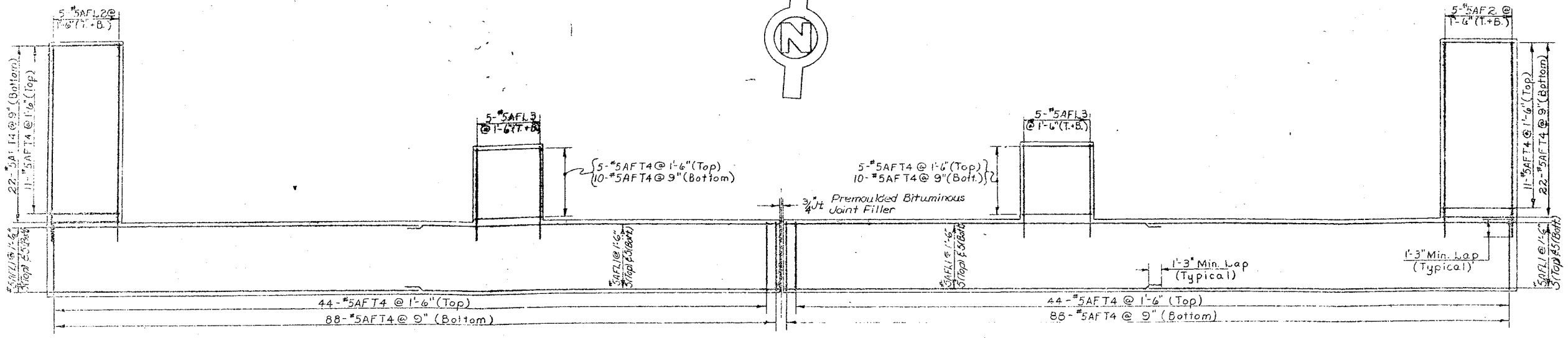

FOOTING REINFORCEMENT PLAN
Scale : 3/16" = 1'-0"

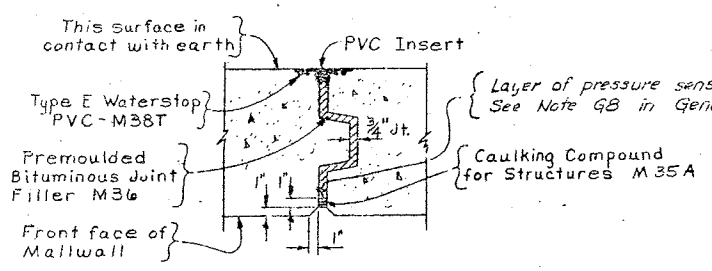

EXPANSION JOINT DETAIL
Scale : 1" = 1'-0"

REINFORCEMENT PLAN 1'-0" ABOVE FOOTING
Scale : 1/4" = 1'-0"

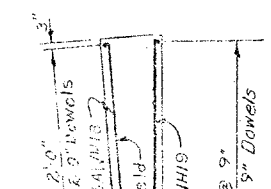

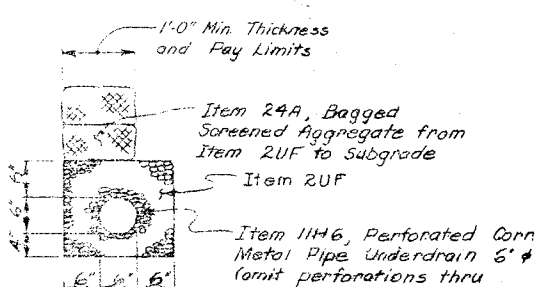

DETAIL "A"
Scale : 3/4" = 1'-0"

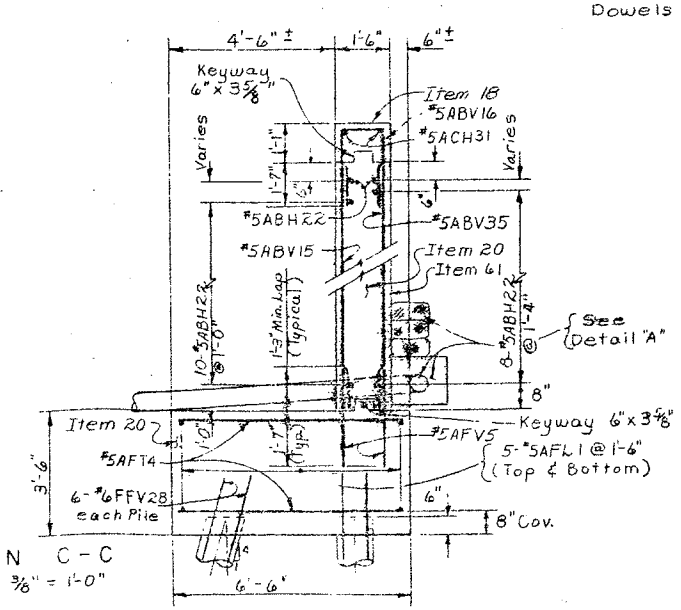

SECTION C-C
Scale : 3/8" = 1'-0"

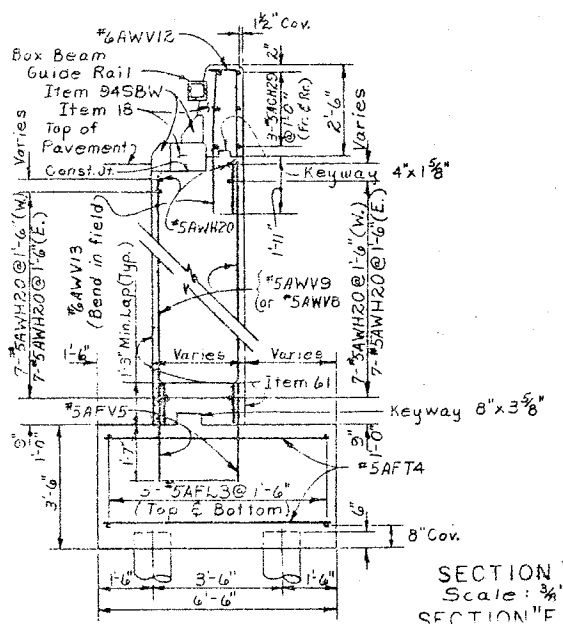

SECTION "B-B"
Scale : 3/8" = 1'-0"

SECTION "F-F" (Similar except for Pile No's and Piles)

Notes:-

See Drawing # 39 for Waterstops.

All footing reinforcement shall have a min. cover of 3" unless otherwise noted.

All other reinforcement shall have a min. cover of 2" unless otherwise noted

All exposed construction joints shall be chamfered one inch

All exposed corners shall be chamfered one inch.

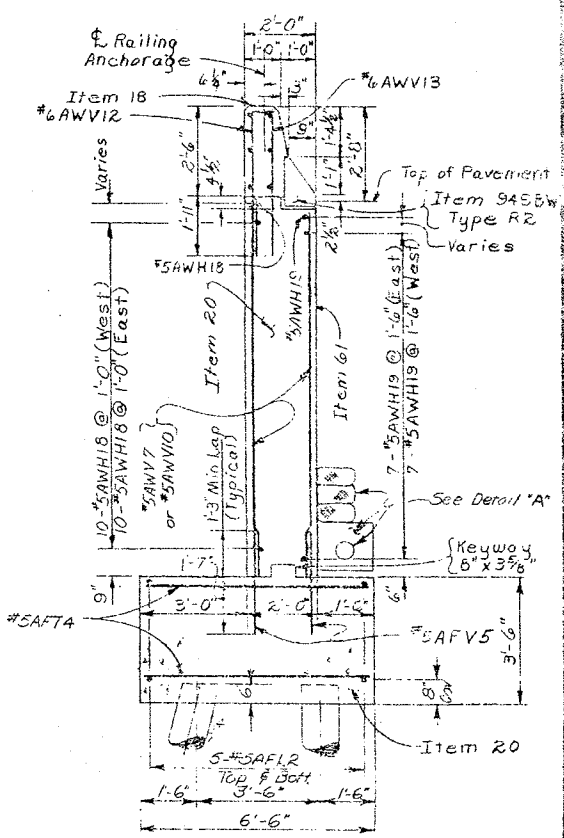

SECTION "A-A"
Scale : 3/8" = 1'-0"

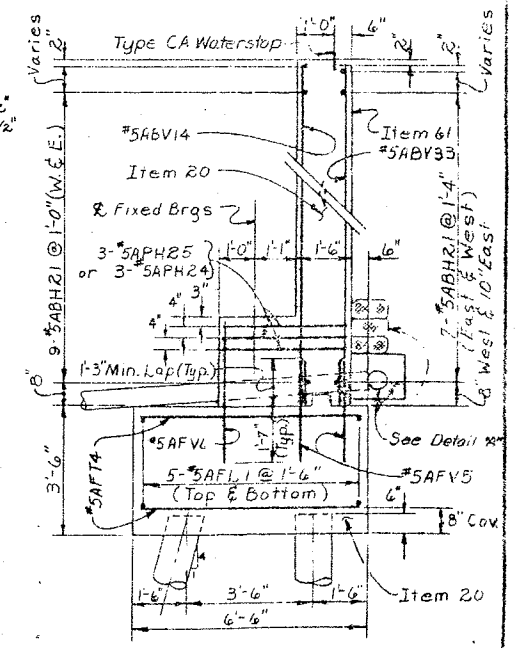

SECTION D-D
Scale : 3/8" = 1'-0"

PROJECT ENGINEER	A. Parker
IN CHARGE OF	T. Ek. Ke'
DESIGNED BY	K. wachter
DESIGN CHECKED BY	V. Pao & H. Sherman
DETAILED BY	J. Durrant & J. C. G.
DETAILS CHECKED BY	C. H. Smith

BRIDGE NO. 2
INTERSTATE ROUTE 481 OVER DEWITT YARDS

NORTH ABUTMENT DETAILS

DRAWING NO. 8 OF 5

F.I.S.H. 70-7

FED. RD. REG. NO.	STATE	FEDERAL AID PROJECT NO.	SHEET NO.	TOTAL SHEETS
1	NEW YORK	~~I-490-8(25)~~ I-481-2(116)	187	309

INTERSTATE ROUTE CONSTRUCTION 570
DEWITT INTERCHANGE (PHASE 2)
ONONDAGA COUNTY

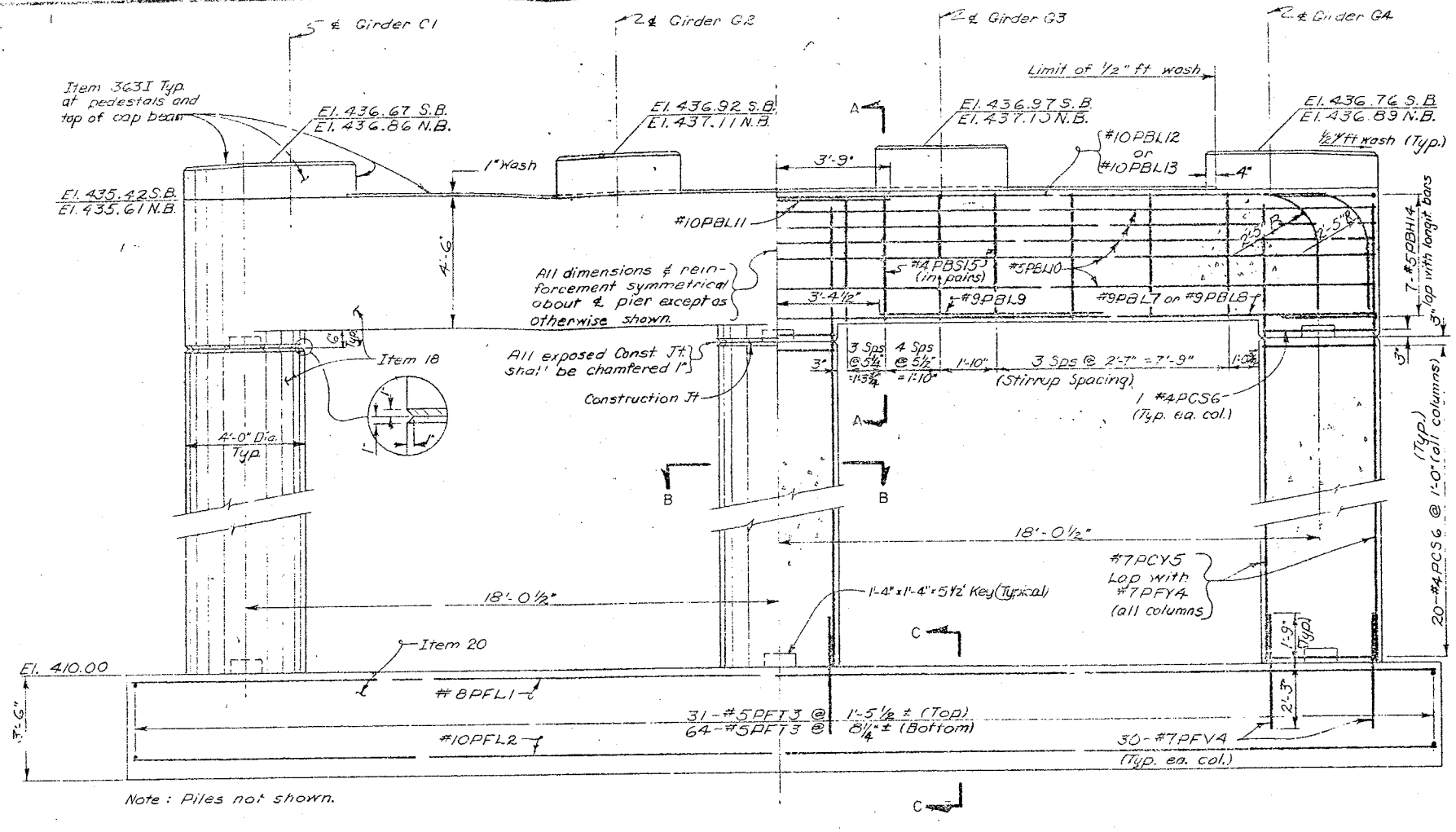

ELEVATION
Scale: ⅜"=1'-0"

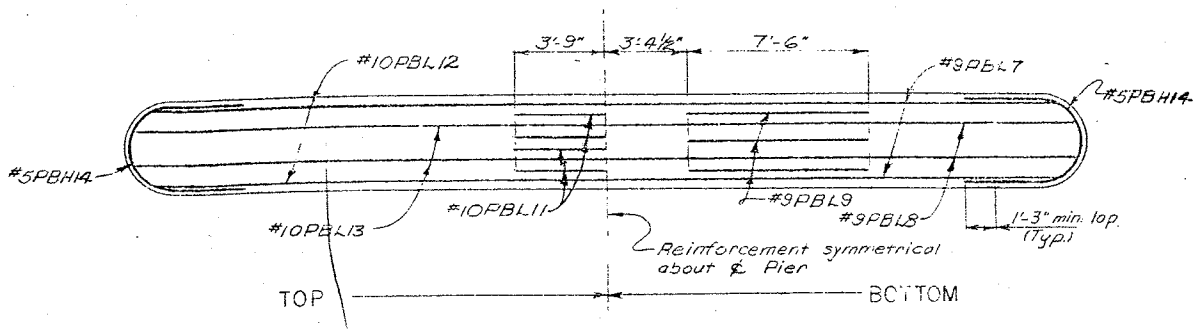

PIER CAP REINFORCEMENT
Scale: ¼"=1'-0"

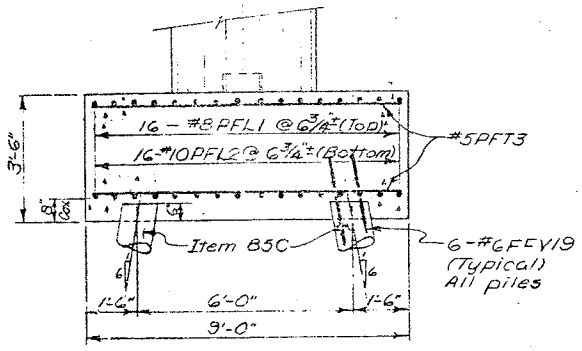

SECTION C-C
Scale: ⅜"=1'-0"

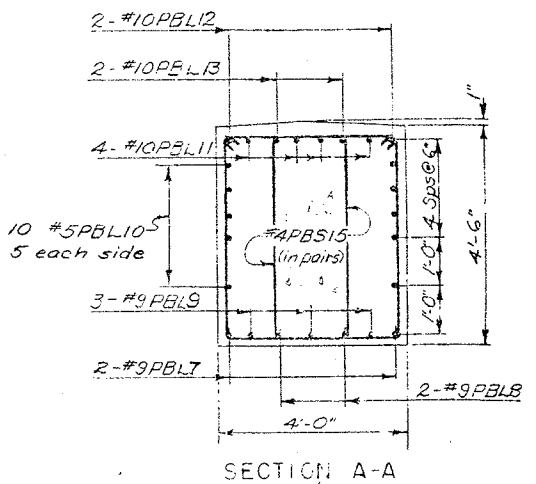

SECTION A-A
Scale: ½"=1'-0"

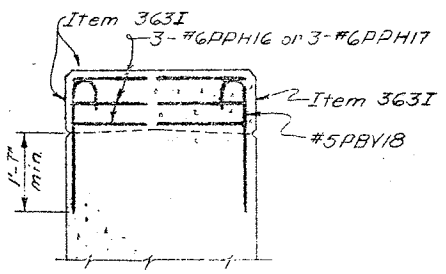

SECTION D-D
Scale: ½"=1'-0"

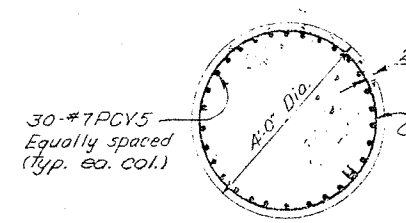

SECTION B-B
Scale: ½"=1'-0"

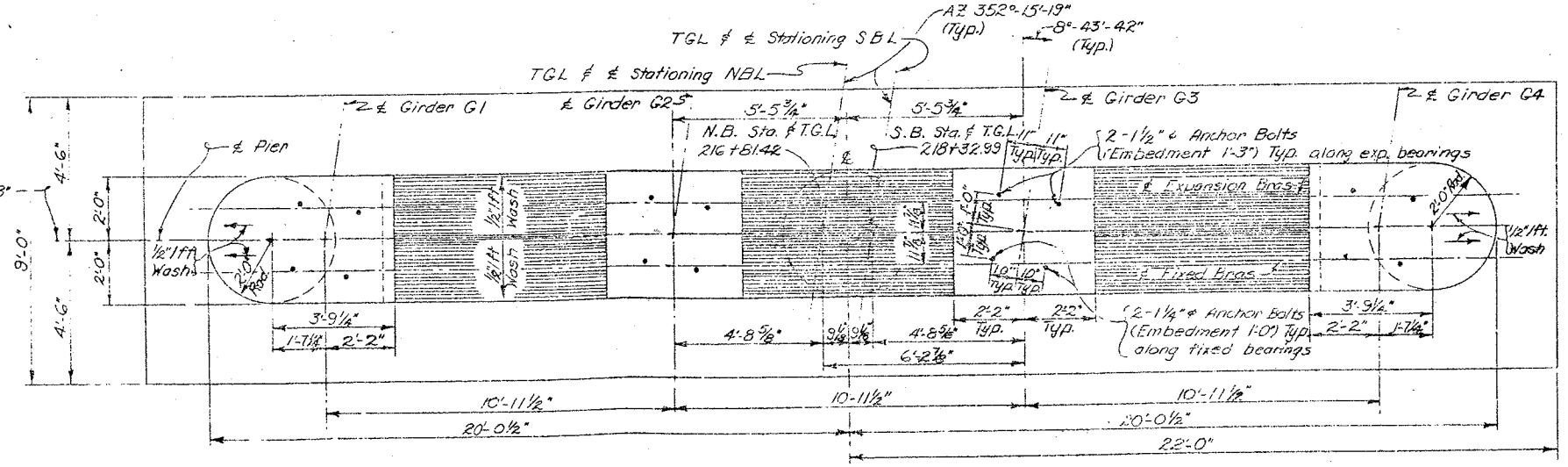

PLAN
Scale: 3/32"=1'-0"

Indicates battered piles (6 on 1)

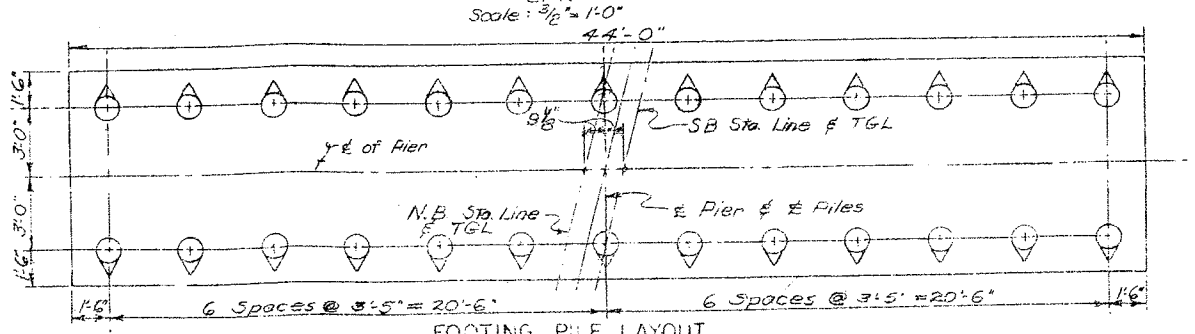

FOOTING PILE LAYOUT

Note: Bar reinforcement not shown.

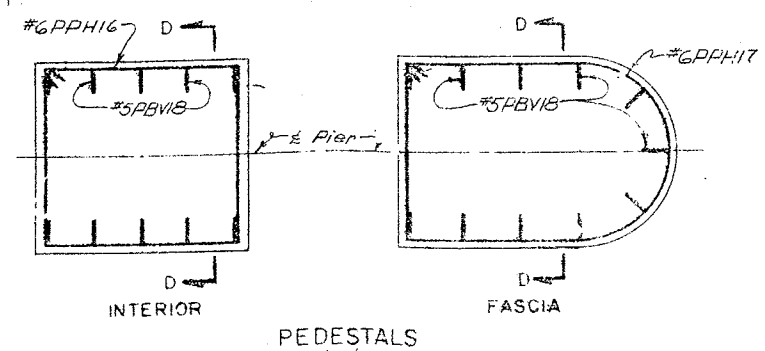

PEDESTALS
Scale: ½"=1'-0"

Notes:
All footing reinforcement shall have a min. cover of 3" unless otherwise shown.
All other reinforcement shall have a min. cover of 2" unless otherwise shown.
Estimated length of cast-in-place concrete piles = 55' South bound and 60' North bound.
For design purposes the pile load does not exceed 35 tons per pile.
For details of pile reinforcement see Drawing No. 42

PROJECT ENGINEER	R. L. Parker
IN CHARGE OF	F. Eckel
DESIGNED BY	N. A. Tosches
DESIGN CHECKED BY	R. Thimble
DETAILED BY	Wm. Durant
DETAIL CHECKED BY	W. G. Stevens

BRIDGE NO. 2
INTERSTATE ROUTE 481 OVER DEWITT YARDS

PIER I (NB & SB)

DRAWING NO. 3

F.I.S.H. 70-7

FED. RD. REG. NO.	STATE	FEDERAL AID PROJECT NO.	SHEET NO.	TOTAL SHEETS
1	NEW YORK	I-390-8(28) I-481-2(116)	188	309

INTERSTATE ROUTE CONNECTION 370
DEWITT INTERCHANGE (PHASE 2)
ONONDAGA COUNTY

ELEVATION
Scale 3/16" = 1'-0"

Note: Piles not shown
Downspouts not shown

Elevation E
Item 363I Typ at pedestals & top of beam.
#11PBL12
#11PBL11
#5PBS32
#11PBL14
#11PBL15 or #11PBL16
3 spaces @ 2'-10" = 8'-6"
4 spaces @ 2½" = 1'-0"
3 spaces @ 3'-3⅜" = 9'-9⅛"
1'-4 PCS9
#4 PCS9 @ 1'-0" Table for no reg'd
#8 PCV6 lap #8 PFV4 (All columns)
Dimension 'A' All columns
Dim. 'B' See Table for no reg'd
Elevation A
Elevation B
Elevation C
Elevation D
Elevation F
#5PBST24 @ 1'-6"
#11PBL10
#4PBL13
4'-7½"
Wash 1"
Elevation G
Item 18
Elevation H
½"H wash
All dimensions and reinforcement symmetrical about ℄ Pier
8'-10¼"
1524 m
Construction JH
Chamfer 1" all exposed construction joints
1'-4 x 1'-4 x 5½" Keyway (Top & Bot of all columns)
4'-0" Typ.
1" wash
18 - #5PST26 @ 1'-0"
18'-0½"
12 - #5PS17 @ 1'-6" (Both Faces) Lap with #5PFV5
Dim. #5PS17 Bot. Table for no reg'd (Both Faces)
1'-9" x 37'-5" x 5½" Keyway
Item 20
#5PFV5
#8PFV4
#8PFV6
29 - #5PFT2 @ 1'-6"
86 - #7PFT3 @ 6"
#5PFL1
4'-6"
2'-6"
1'-6"
3'-0"
2'-0"

Elevation F
#5PBST24 @ 1'-6"
#11PBL10
#4PBL13
4'-7½"
All dimensions and reinforcement symmetrical about ℄ Pier
8'-10¼"
℄ Girder G3
Item 18
A
Elevation G
Wash 1"
Elevation H
½"H wash
Elevation A
Elevation B
1524 m
Construction JH
Item 18
Chamfer 1" all exposed construction joints
1'-4 x 1'-4 x 5½" Keyway (Top & Bot of all columns)
4'-0" Typ.
B, C
1" wash
Item 18
El. 421.25
18 - #5PST26 @ 1'-0"
18'-0½"
12 - #5PS17 @ 1'-6" (Both Faces) Lap with #5PFV5
Dim. #5PS17 Bot. Table for no reg'd (Both Faces)
1'-9" x 37'-5" x 5½" Keyway
Item 20
#5PFV5
#8PFV6
29 - #5PFT2 @ 1'-6"
#5PFL1
4'-6"
2'-6"
1'-6"
3'-0"
2'-0"
C

℄ Girder G1
℄ Girder G2
℄ Girder G3
West of K-111 wash
℄ Girder G4
Az. 352°-15'-19"
TGL ℄ & Stations N&L
TGL ℄ & Stations S&L
All dimensions and reinforcement symmetrical about ℄ Pier.
℄ Girder G3
2-1½" ℄ Anchor Bolts (Typical) (Embedment 1'-3")
8'-55-4⅝" (Typ)
℄ Girder G4
Wash 1"
½"H wash
2'-0"
2'-0"
2'-0"
6'-0"
12'-0"
3'-10"
1'-6"
3'-0"
1'-6"
Station "A" S&L
Station "A" NBL
℄ Row of Battered Piles
℄ Pier
Az. 255°-3'-38"
℄ Row of Vertical Piles
℄ Row of Battered* Piles
2'-3"
2'-3"
5'-5⅝"
4'-8⅝"
6'-2⅞"
10'-11½"
3'-10½"
1'-7½"
1'-6"
6 Pile Spaces @ 3'-1" = 18'-6"±
1'-6"
21'-6"
43'-0"

FOOTING PILE LAYOUT
Scale 3/16" = 1'-0"

* Piles adjacent to Steel Sheet Piling shall not be battered.

PLAN
Scale 3/16" = 1'-0"

#4PBL13
#11PBL12
#5 PBL22
#11PBL11
#11PBL10
#11PBL14
#11PBL15
#11PBL16
#5PBL22 lap with longitudinal bars in both faces
Reinforcement symmetrical about ℄ Pier
TOP
BOTTOM

PIER CAP REINFORCEMENT
Scale 3/8" = 1'-0"

Battered Pile shown. Do not batter piles adjacent to Steel Sheet Piling, Item 83S

#8PSL25
#5PST26
4'-0"
#5PSV7
#5PBS(REV) 1'-0"
Lap
1'-3"
#5PFT2
1'-7"
#5PFV5
4'
9 - #5PFL1 @ 1'-3" (Top)
10 - #5PFL1 @ 1'-3¼" (Bot.)
#7PFT3
Item 85C
1'-6"
3'-0"
3'-0"
3'-0"
1'-6"
12'-0"
#6 FFV23 For details of pile reinforcement see Drawing No 42

SECTION C C
Scale 3/8" = 1'-0"

2 - #11 PBL 12
2 - #11 PBL 11
7 - #11 PBL 10 9'-2" long
Chamfer all exposed corners 1" Typ.
#5PBT24
4 - #4 PBL 13 9'-2" long
#5PBL20 Both Faces
#5 PBS32 (in pairs)
3 spaces @ 0'-10"
2 spaces @ 1'-0"
4'-6"
4 - #11 PBL 14 8'-1" long
2 - #11 PBL 15
2 - #11 PBL 16
4'-0"

SECTION A-A
Scale 3/16" = 1'-0"

30 - #8 PCV6
#4 PCS9
2" Cov.
4'-0" Dia
Item 363I
3 - #6 PPH18 or 3 - #6 PPH19
#5 PBV17
1'-7" min

SECTION D-D
Scale ½" = 1'-0"

SECTION B-B
Scale 3/4" = 1'-0"

Note All footing reinforcement shall have a min. cover of 3" unless otherwise shown.
All other reinforcement shall have a min cover of 2" unless otherwise shown.
Estimated length of cast-in-place concrete piles: Pier #2 SB 55' long, Pier #2 NB & Pier #3 SB 60' long, Pier #3 NB 65' long, & Pier #4 NB & SB 70' long
For design purposes the pile load does not exceed 35 tons/pile.

Downspouts to be paid for under Item 13DE Each hopper to be drained by one downspout attached to each exterior column See drawing #32 for details

STATION "A"	NBL	SBL
PIER 2	218+37.59	219+89.15
PIER 3	220+08.76	221+60.32
PIER 4	222+06.76	223+58.32

PIER DATA

DESCRIPTION	NORTHBOUND			SOUTHBOUND		
	PIER 2	PIER 3	PIER 4	PIER 2	PIER 3	PIER 4
ELEVATION A	437.00'	438.00	438.50	437.00	438.00	438.50
" B	432.50'	433.50	434.00	432.50	433.50	434.00
" C	411.00	413.00	412.80	411.00	413.00	412.80
" D	407.50	409.50	409.30	407.50	409.50	409.30
" E	438.42	439.47	439.83	438.28	439.38	439.80
" F	438.66	439.70	440.09	438.52	439.61	440.05
" G	438.64	439.68	440.04	438.56	439.65	440.08
" H	438.43	439.46	439.79	438.35	439.43	439.83
DIM A	10.75"	11.75"	12.25"	10.75"	11.75"	12.25"
" B	6"	6"	1'-0"	6"	6	1'-0"
NO PCS9 Each Col.	12	13	13	12	13	13
DIM C	1'-0"	1'-0"	3"	1'-0"	1'-0"	3"
NO PSL8 Each Pier	20	14	18	20	16	18

For details of Steel Sheet Piling, Item 83S, see Drawing No 4.

3'-0" 43'-0" footing 3'-0"
℄ row of battered piles
Item 83TXS
3'-0"
12'-0" footing
3'-0"
Item 83TXS
℄ row of vertical piles

PIERS 3 SB & 3 NB

43'-0" footing
℄ row of vertical piles
Item 83S
11'-0" footing
Item 83S

PIERS 2 & 4 SB, 2 & 4 NB

#6 PPH18
#5 PBV17
℄ Pier
INTERIOR

#6 PPH19
#5 PBV17
D
D
FASCIA

PEDESTALS
Scale ½" = 1'-0"

PROJECT ENGINEER E. Palmer
IN CHARGE OF E. Blake
DESIGNED BY K. Kumar
DESIGN CHECKED BY N.L. Tobiasz
DETAILED BY D.M. Smith
DETAILS CHECKED BY C. Lindquist

BRIDGE NO. 2
INTERSTATE ROUTE 481 OVER DEWITT YARDS

PIERS #2, #3, #4 (NB & SB)
DRAWING NO. 10 OF 30

F.I.S.H. 70-7

FED. RD. DIST. NO.	STATE	FEDERAL AID PROJECT NO.	SHEET NO.	TOTAL SHEETS
	NEW YORK	I-88C-3(...) I-681-2(116)	189	302

INTERSTATE ROUTE CONNECTION 570
RUTTSHUT INTERCHANGE (PHASE 2)
ONONDAGA COUNTY

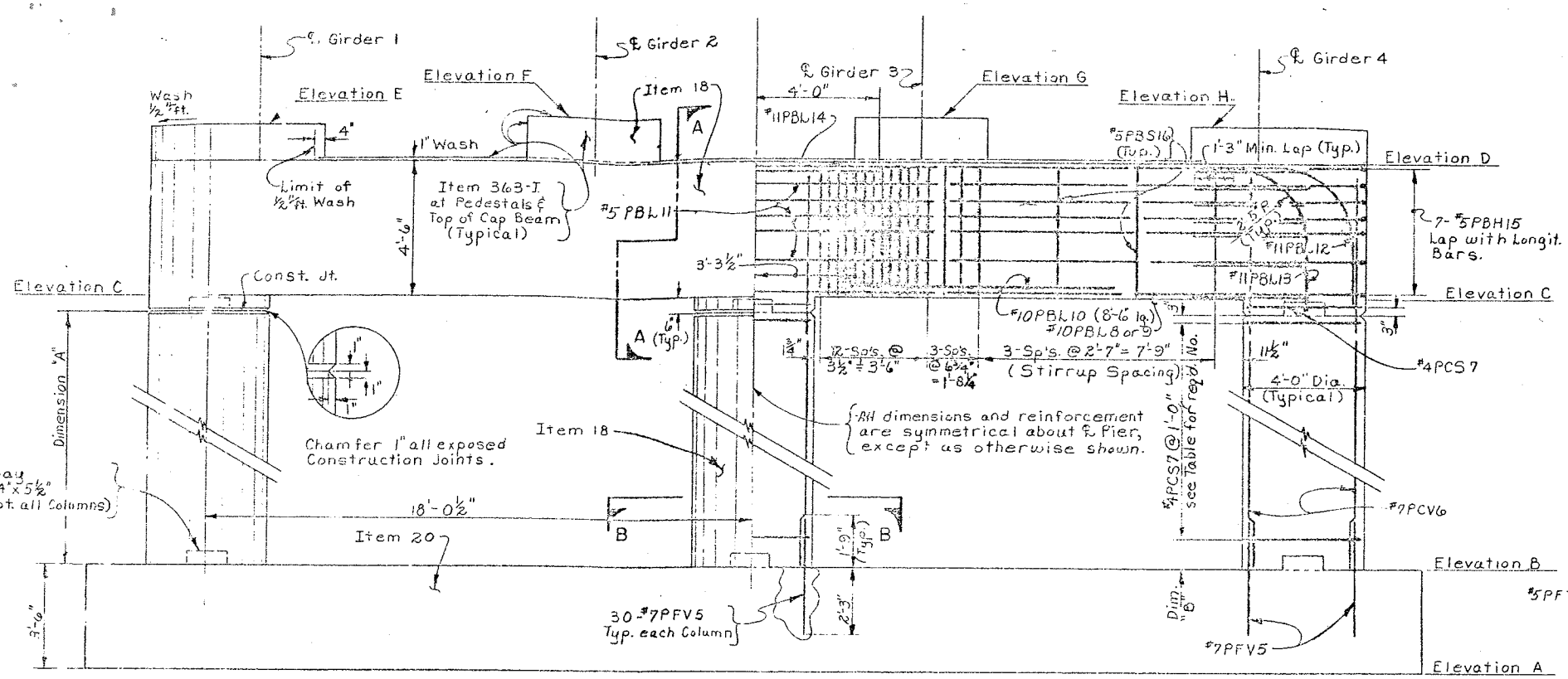

Notes:

Piles and Downspouts not shown.
Footing reinforcement not shown.

ELEVATION
Scale: ⅜"=1'-0"

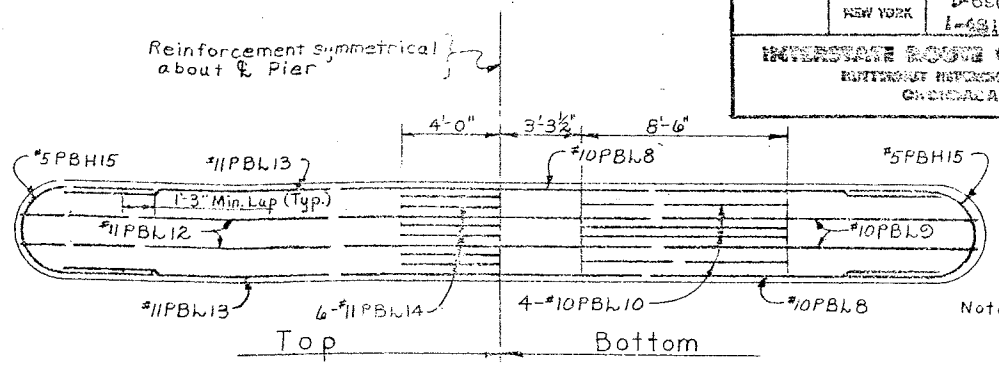

Note: #5PBS16 not shown.

PIER CAP REINFORCEMENT
Scale: ¼"=1'-0"

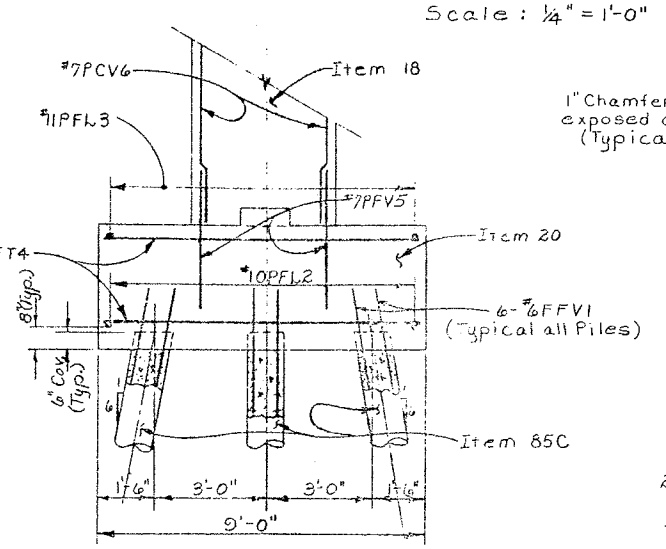

END SECTION
Scale: ⅜"=1'-0"

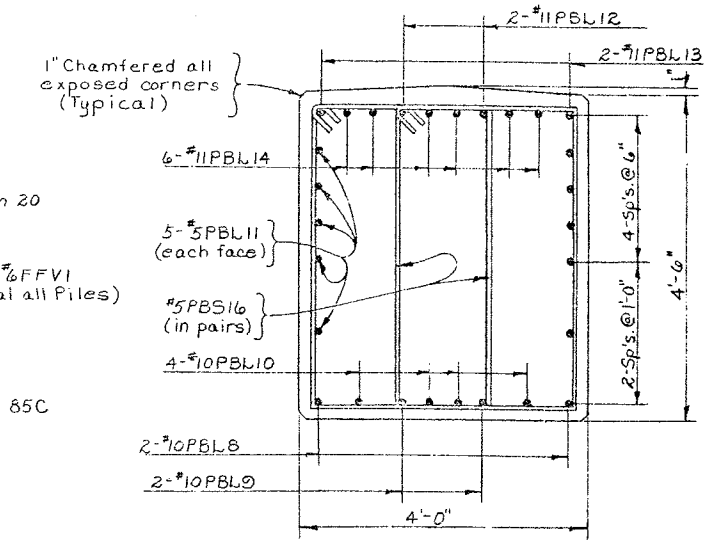

SECTION A-A
Scale: ¾"=1'-0"

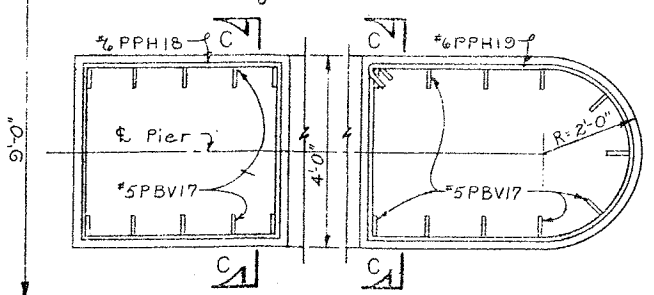

PEDESTAL REINFORCEMENT
Scale: ½"=1'-0"

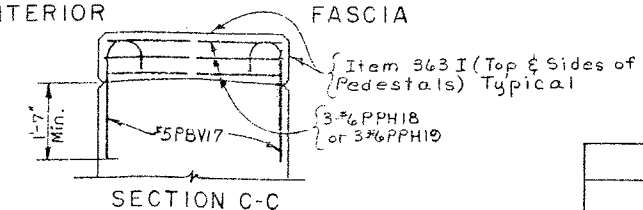

SECTION C-C

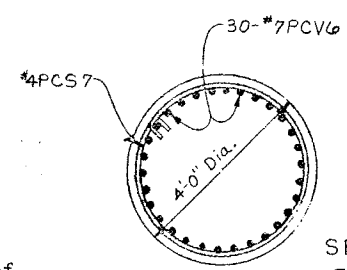

SECTION B-B
Scale: ½"=1'-0"

Notes:

All footing reinforcement shall have a minimum cover of 3" unless otherwise shown.

All other reinforcement shall have a minimum cover of 2" unless otherwise shown.

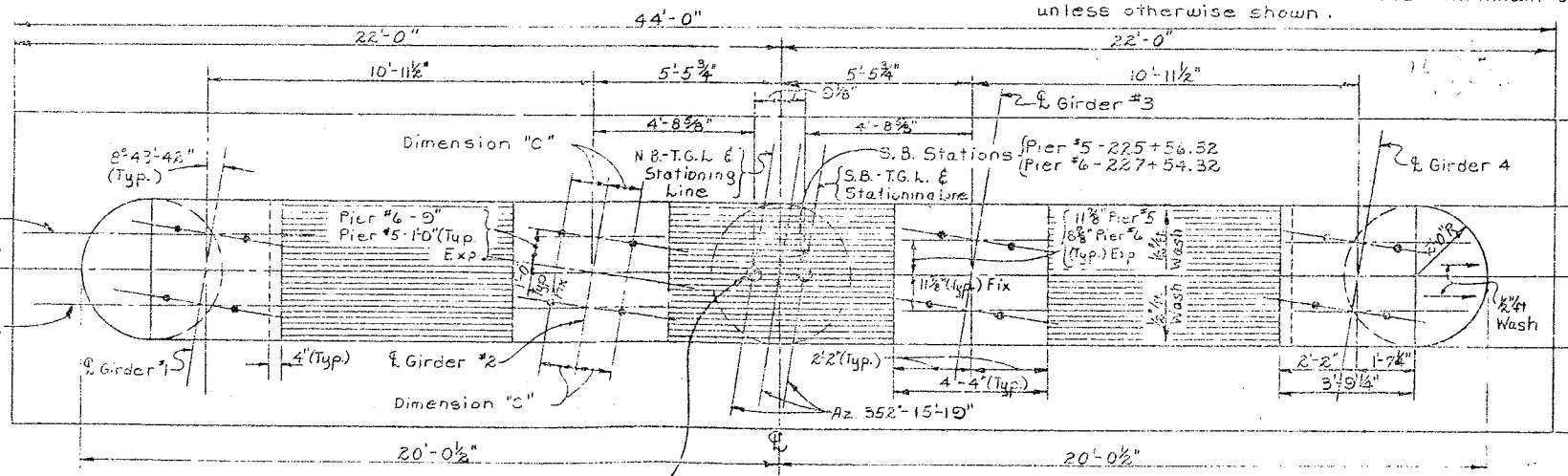

PLAN
Scale: ⅜"=1'-0"

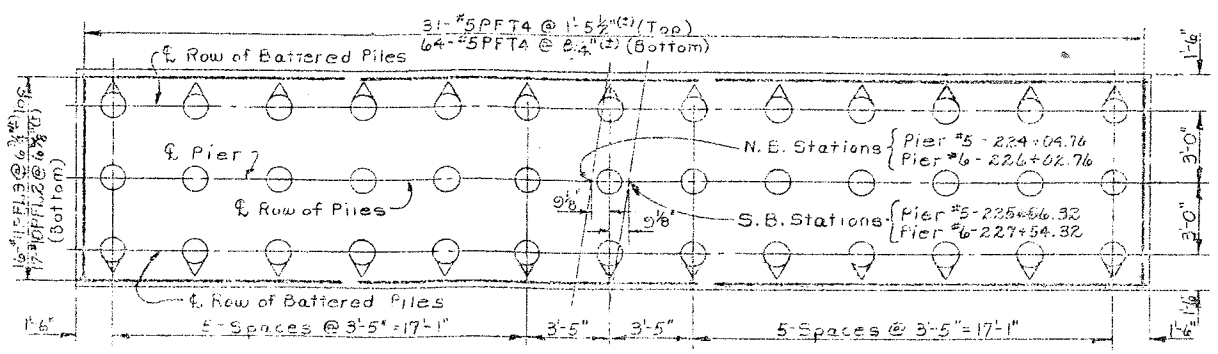

FOOTING REINFORCEMENT PLAN & PILE LAYOUT
Scale: ¼"=1'-0"

Note:

For Design Purposes the pile load does not exceed 85 Tons per Pile.

○ — Indicates Piles Battered 6 on 1

Estimated length of Cast-in-Place Piles:

Pier #5 S.B. = 75'
Pier #5 N.B. = 60'
Pier #6 S.B. = 80'
Pier #6 N.B. = 80'

PIER DATA

DESCRIPTION	PIER No. 5 N.B.	PIER No. 5 S.B.	PIER No. 6 N.B.	PIER No. 6 S.B.
ELEVATION A	409.30	409.30	410.50	407.30
" " (B)	412.80	412.80	414.00	410.80
" " (C)	433.45	433.55	431.96	432.12
" " D	437.95	438.05	436.46	436.62
" " E	439.26	439.30	437.79	437.88
" " F	439.50	439.54	438.00	438.10
" " G	439.46	439.56	437.95	438.11
" " H	439.20	439.30	437.71	437.87
DIM. A	20'-2"	20'-3"	17'-5½"	20'-10"
DIM. B	11"	1'-0"	3"	7"
NO. HOOPS	21	21	19	22

ANCHOR BOLT DATA

GIRDER		PIER NO.5 S.B. & N.B. ϕ BOLT	PIER NO.5 S.B. & N.B. REQ'D. EMBED.	PIER NO.5 S.B. & N.B. DIM. C	PIER NO.6 N.B. & S.B. ϕ BOLT	PIER NO.6 N.B. & S.B. REQ'D. EMBED.	PIER NO.6 N.B. & S.B. DIM. C
FIXED BRGS.	G1	1½"	1'-3"	1'-0"	1½"	1'-3"	1'-0"
	G2	1½"	1'-3"	1'-0"	1½"	1'-3"	1'-0"
	G3	1½"	1'-3"	1'-0"	1½"	1'-3"	1'-0"
	G4	1½"	1'-3"	1'-0"	1½"	1'-3"	1'-0"
EXP BRGS.	G1	1½"	1'-3"	1'-0"	1½"	1'-3"	1'-0"
	G2	1½"	1'-3"	1'-0"	1¼"	1'-0"	10"
	G3	1½"	1'-3"	1'-0"	1¼"	1'-0"	10"
	G4	1½"	1'-3"	1'-0"	1½"	1'-3"	1'-0"

BRIDGE NO.2
INTERSTATE ROUTE 481 OVER DEWITT YARDS

PIERS 5 & 6 (N.B. & S.B.)

DRAWING NO. 11 OF 50

PROJECT ENGINEER P. Forker
CHARGE OF I. Eckel
DESIGNED BY L. D. Tuttobene
DESIGN CHECKED BY N. Toppazzini
DETAILED BY J. C. Thompson
DETAIL CHECKED BY W. J. Sweet

F.I.S.H. 70-7

FED. RD. REG. NO.	STATE	FEDERAL AID PROJECT NO.	SHEET NO.	TOTAL SHEETS
1	NEW YORK	I-490-3(28) I-481-2(116)	190	206

INTERSTATE ROUTE 481 (FISH 70)
DEWITT - SYRACUSE (FISH 2)
ONONDAGA COUNTY

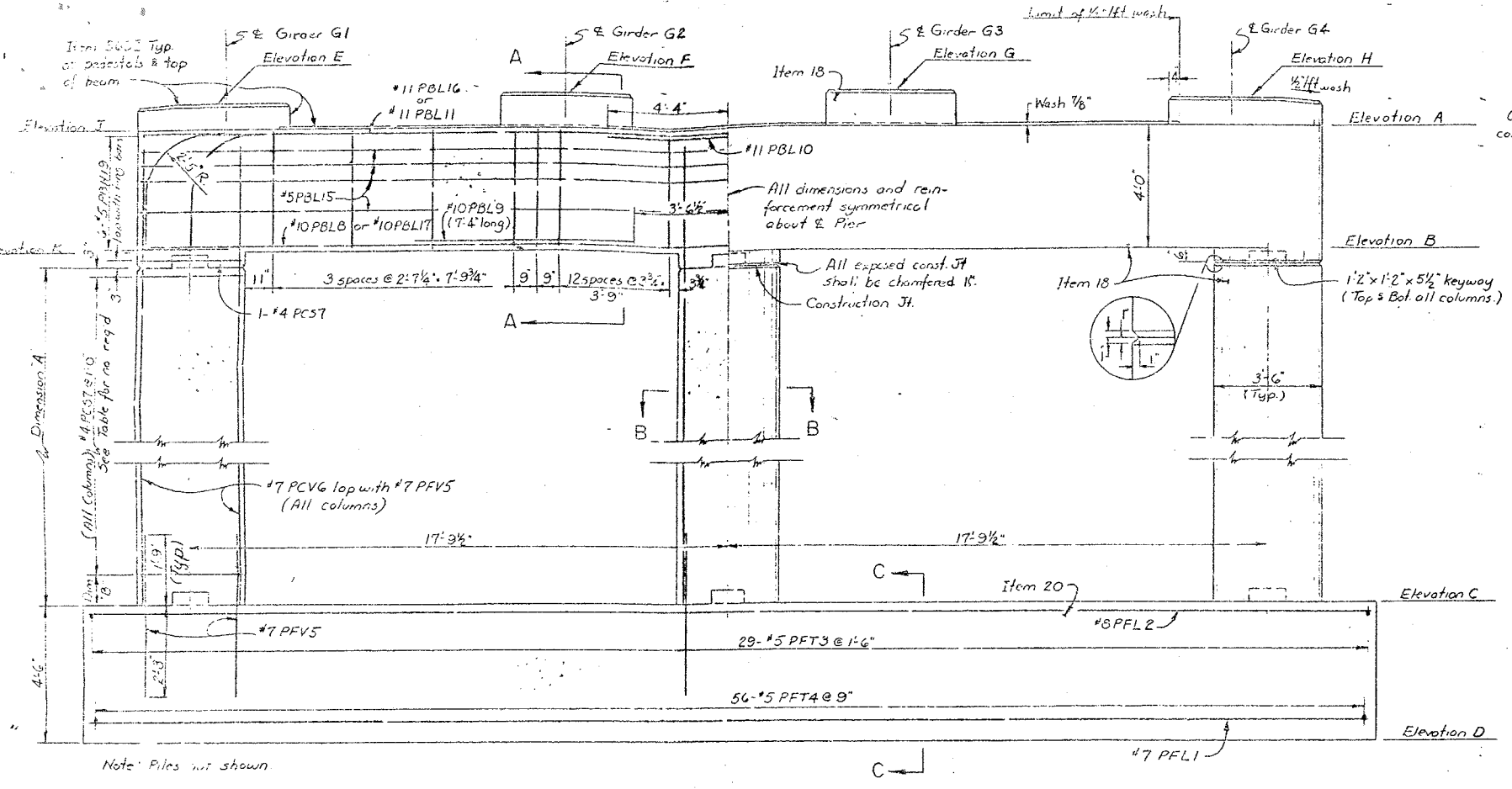

ELEVATION
Scale 3/8"=1'-0"

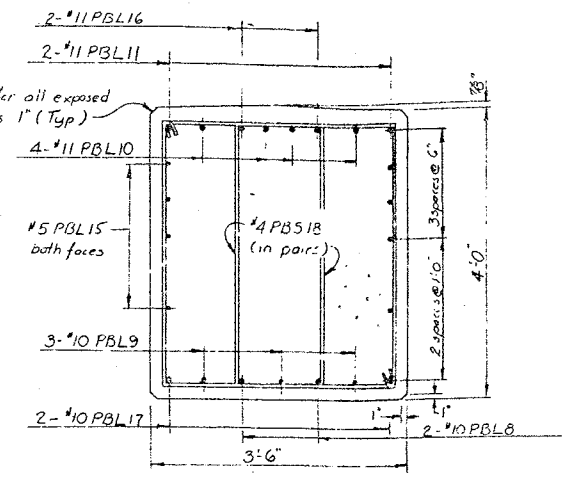

SECTION A-A
Scale 3/4"=1'-0"

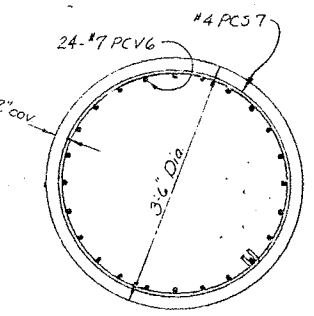

SECTION B-B
Scale 3/4"=1'-0"

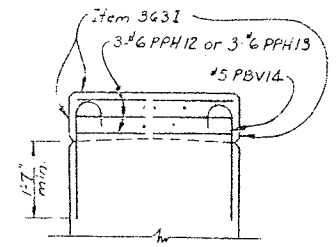

SECTION D-D
Scale 1/2"=1'-0"

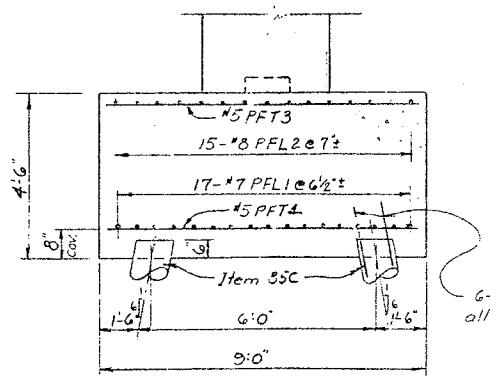

SECTION C-C
Scale 3/8"=1'-0"

Note: All footing reinforcement shall have a min. cover of 3" unless otherwise shown.
All other reinforcement shall have a min. cover of 2" unless otherwise shown.
Estimated length of cast-in-place concrete piles = 80' at Pier 7 NB & SB, 70' at Pier 8 NB & SB and Pier 9 NB
For design purposes the pile load does not exceed 35 tons per pile.

For details of pile reinforcement see Drawing No. 42

STATION "A"

	NBL	SBL
PIER 7	227+26.76	228+78.32
PIER 8	228+50.76	230+02.32
PIER 9	229+74.76	

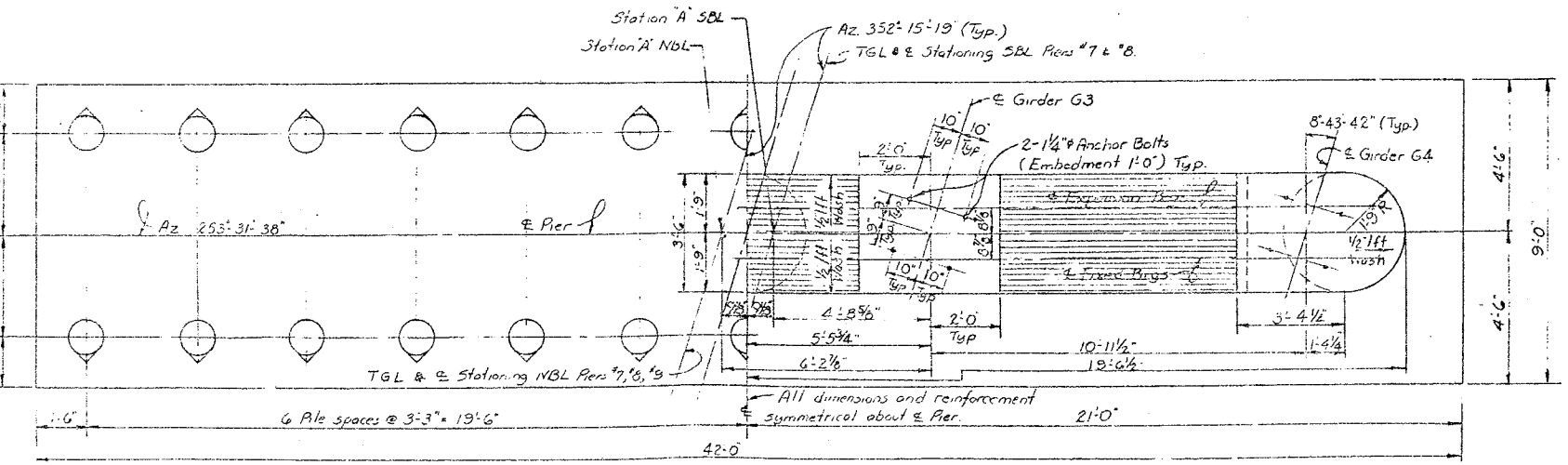

Indicates battered piles. (4 on 1)

FOOTING PILE LAYOUT
Scale 3/8"=1'-0"

PLAN
Scale 3/8"=1'-0"

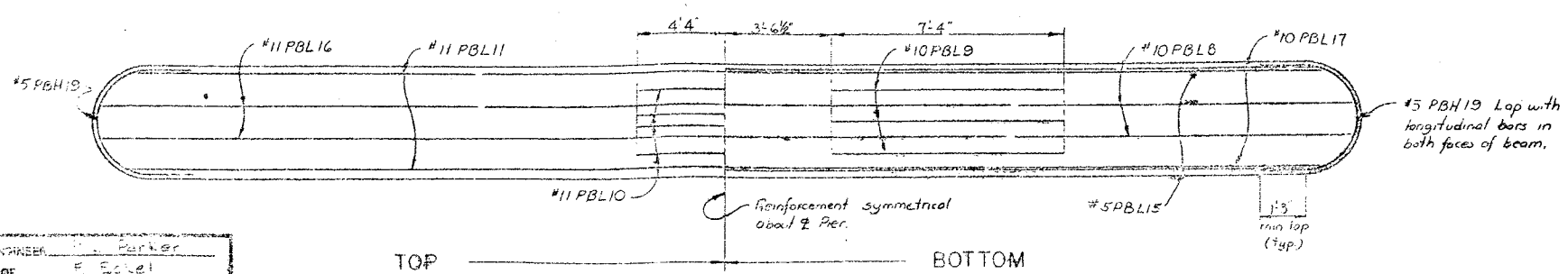

PIER CAP REINFORCEMENT
Scale 3/8"=1'-0"

PIER DATA

DESCRIPTION	NORTHBOUND			SOUTHBOUND	
	PIER 7	PIER 8	PIER 9	PIER 7	PIER 8
ELEVATION A	438.29	436.51	434.36	438.49	436.74
" B	434.29	432.51	430.36	434.49	432.74
" C	410.00	408.80	407.70	409.00	408.00
" D	405.50	404.30	403.20	404.50	403.50
" E	439.39	437.62	435.69	439.52	437.79
" F	439.59	437.82	435.74	439.73	437.99
" G	439.54	437.76	435.62	439.74	438.00
" H	439.29	437.51	435.36	439.49	437.74
DIM A	23.79	23.21	22.16	24.99	24.24
" B	6 1/2"	11 1/2"	11"	9"	1'-0"
NO. HOOPS	24	23	22	25	24
ELEVATION J	438.29	436.51	434.69	438.49	436.74
ELEVATION K	434.29	432.51	430.69	434.49	432.74

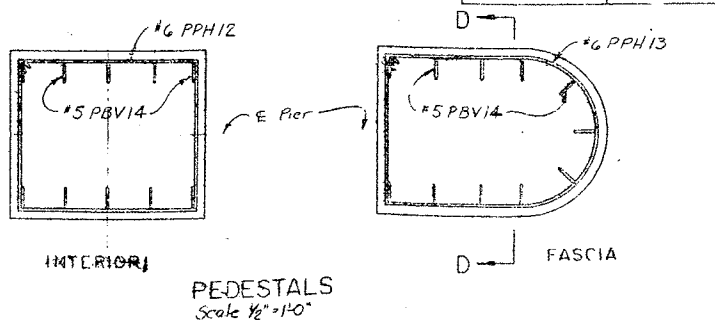

PEDESTALS
Scale 1/2"=1'-0"

PROJECT ENGINEER	L. Parker
IN CHARGE OF	E. Fickel
REVIEWED BY	L. Lowe
DESIGN DETAILED BY	L. A. TORDELLA
CHECKED BY	Ted Smith
DRAWN BY	S. Pierce

BRIDGE NO. 2
INTERSTATE ROUTE 481 OVER DEWITT YARDS

PIERS 7 & 8 NBL & SBL, PIER 9 NBL

DRAWING NO. 12 OF 50

F.I.S.H. 70-7

FED. RD. REG. NO.	STATE	FEDERAL AID PROJECT NO.	SHEET NO.	TOTAL SHEETS
1	NEW YORK	I-90WC-8(28) I-431-2(116.	191	302

INTERSTATE ROUTE CONNECTION 570
EXTENSION INTERCHANGE (PHASE 2)
ONONDAGA COUNTY

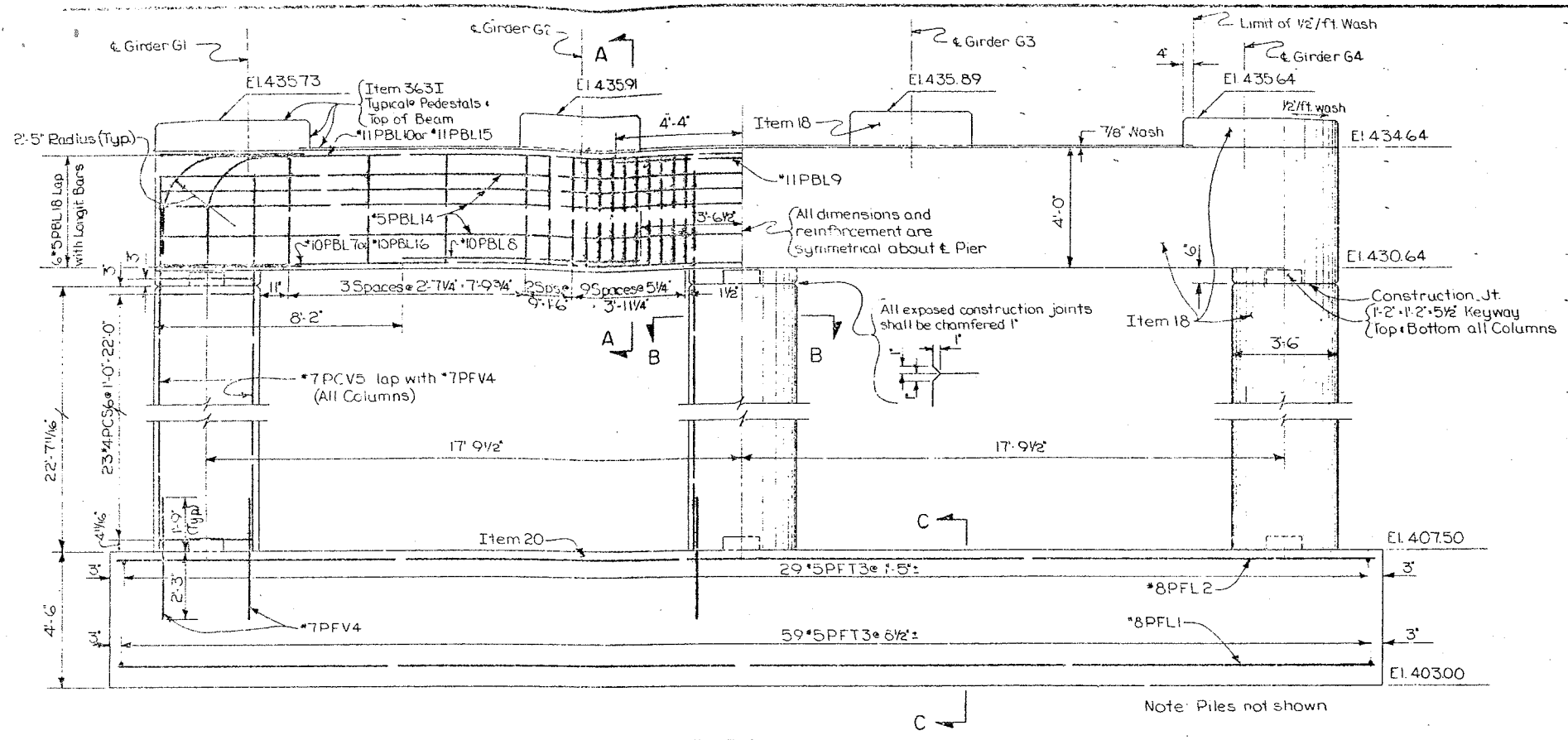

ELEVATION
Scale 3/8"=1'-0"

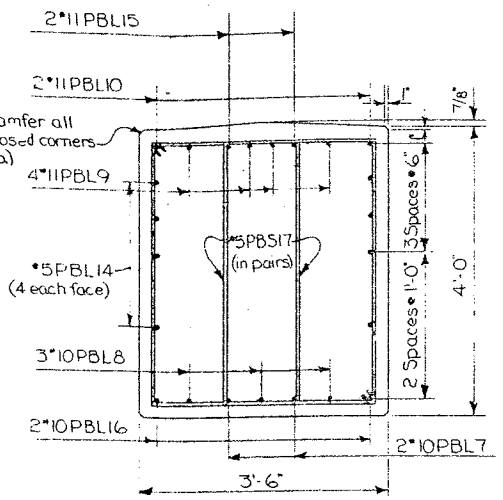

SECTION A-A
Scale 3/4"=1'-0"

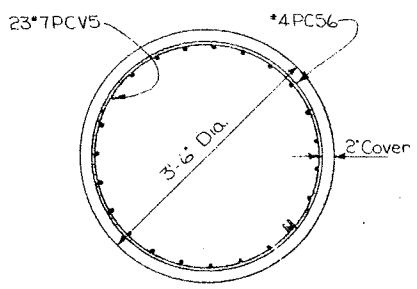

SECTION B-B
Scale 3/4"=1'-0"

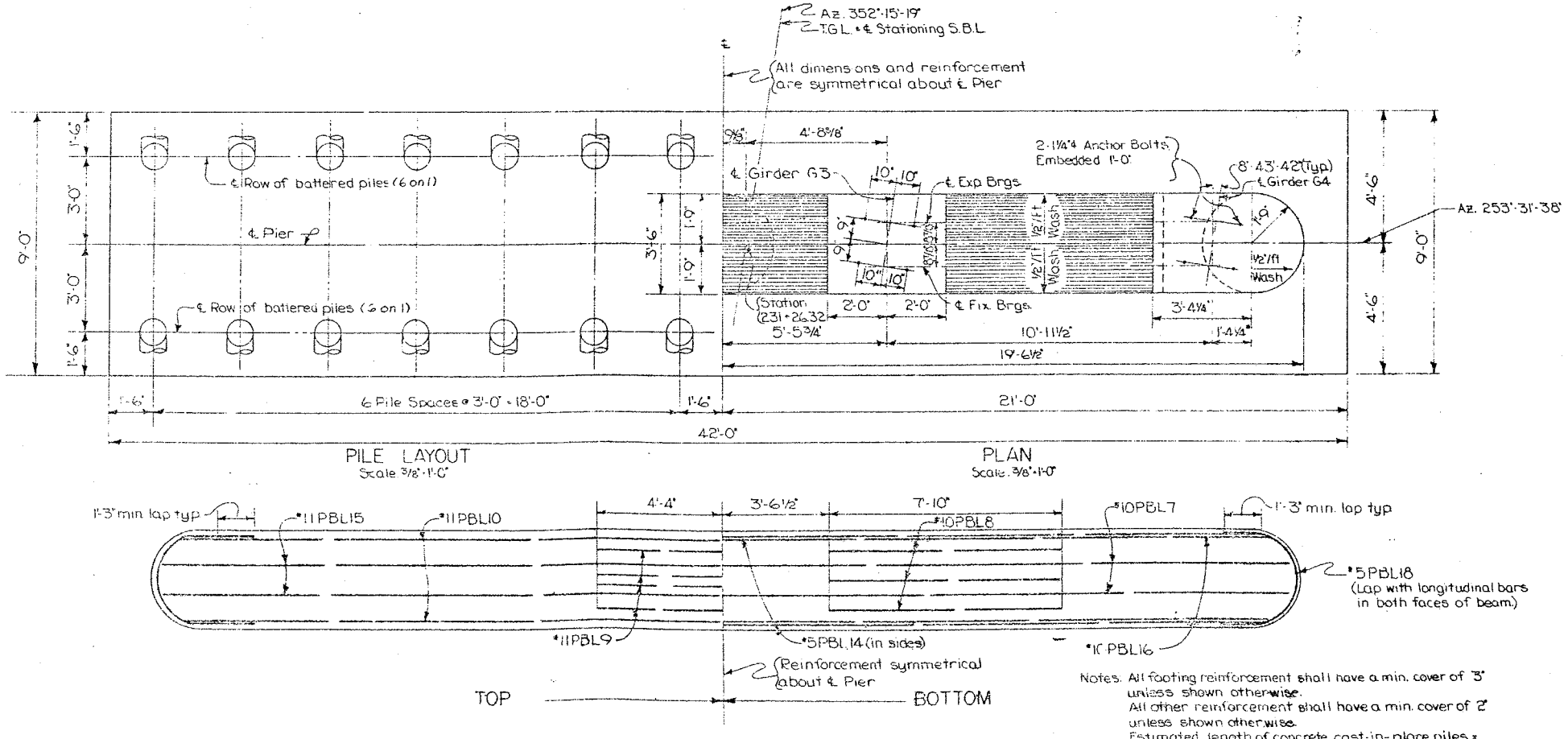

PILE LAYOUT
Scale 3/8"=1'-0"

PLAN
Scale 3/8"=1'-0"

PIER CAP REINFORCEMENT
Scale 3/8"=1'-0"

Notes: All footing reinforcement shall have a min. cover of 3" unless shown otherwise.
All other reinforcement shall have a min. cover of 2" unless shown otherwise.
Estimated length of concrete cast-in-place piles = 70'. For design purposes the pile load does not exceed 35 tons per pile.

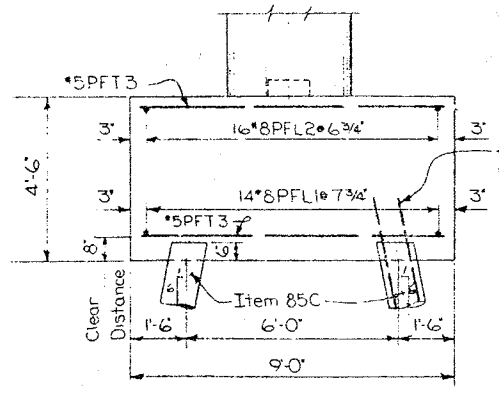

SECTION C-C
Scale 3/8"=1'-0"

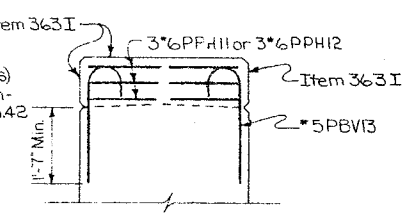

SECTION D-D
Scale: 1/2"=1'-0"

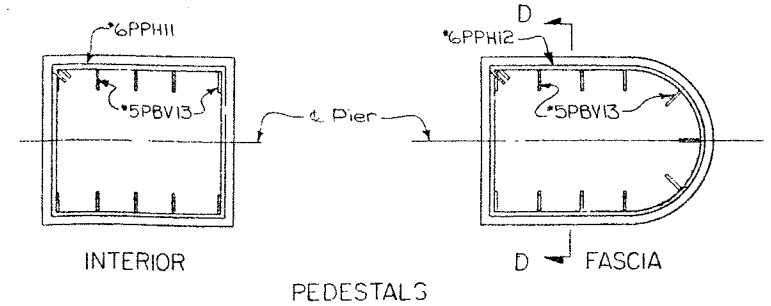

INTERIOR

PEDESTALS
Scale: 1/2"=1'-0"

D FASCIA

PROJECT ENGINEER E. L. Parker
IN CHARGE OF F. Eckel
DESIGNED BY S. Rowe
DESIGN CHECKED BY N. A. Toppres
DETAILED BY J. Darcy
DETAIL CHECKED BY S. Rowe

BRIDGE NO. 2
INTERSTATE ROUTE 481 OVER DEWITT YARDS
PIER 9 (SB)
DRAWING NO. 13 OF 50

F.I.S.H. 70-7

FED. RD. REG. NO.	STATE	FEDERAL AID PROJECT NO.	SHEET NO.	TOTAL SHEETS
1	NEW YORK	F-690-3(28) F-481-2(116)	192	309

INTERSTATE ROUTE CONNECTION 570
BUTTERNUT INTERCHANGE (PHASE 2)
ONONDAGA COUNTY

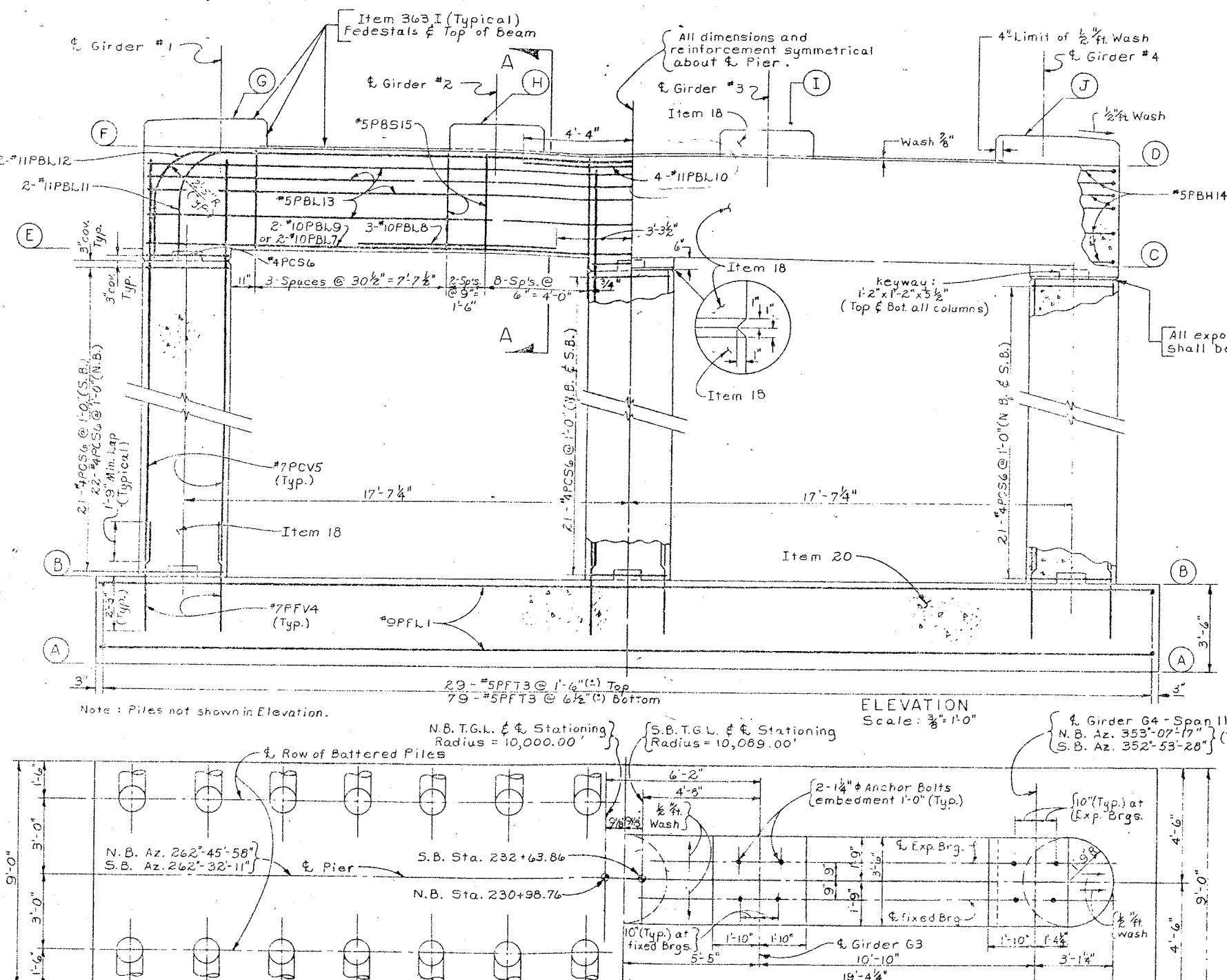

ELEVATION
Scale : ⅜" = 1'-0"

SECTION A-A
Scale : ¾" = 1'-0"

Note : Piles not shown in Elevation.

PILE LAYOUT
Scale : ⅜" = 1'-0"

PLAN
Scale : ⅜" = 1'-0"

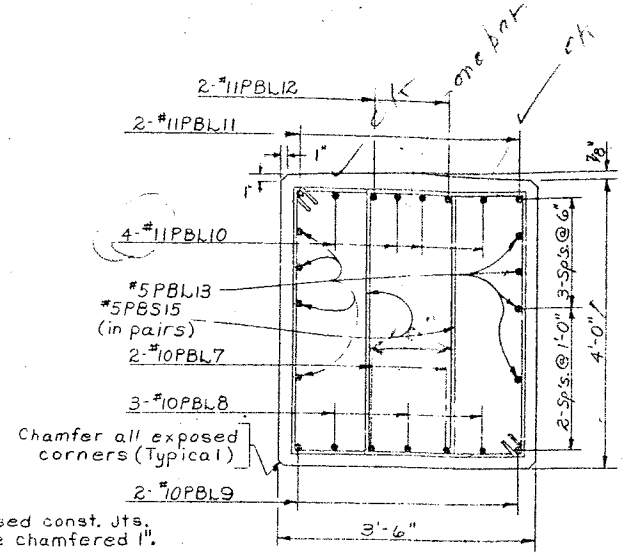

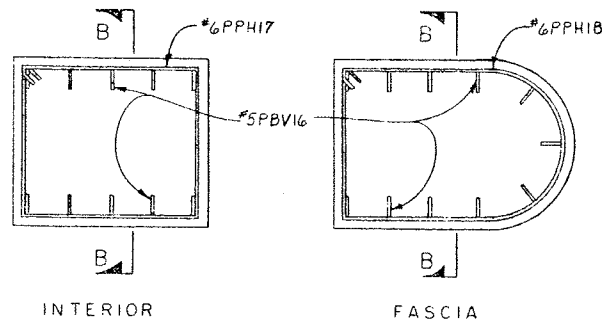

PEDESTAL REINFORCEMENT
Scale : ½" = 1'-0"

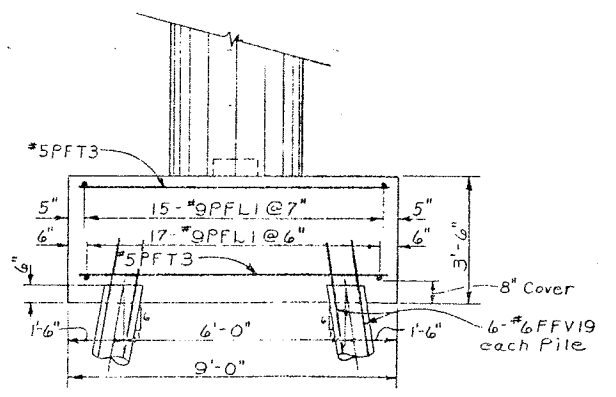

END VIEW
Scale : ⅜" = 1'-0"

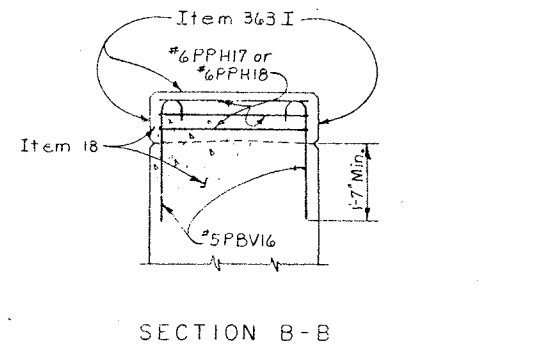

SECTION B-B
Scale : ½" = 1'-0"



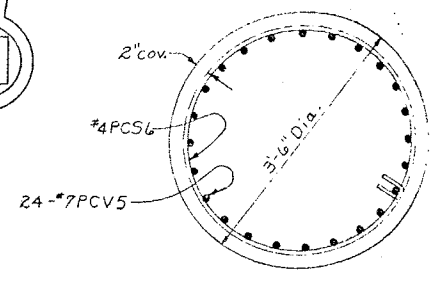

TYPICAL COLUMN SECTION
Scale : ¾" = 1'-0"

Notes :
All footing reinforcement shall have a min. cover of 3" unless otherwise shown.
All other reinforcement shall have a min. cover of 2" unless otherwise shown.
Estimated length of Cast-in-Place concrete piles = 70'-0" S.B. & 65'-0" N.B.
For Design Purposes the pile load does not exceed 35 Tons per Pile.
For details of Cast-in-Place Piles see Dwg. #42.

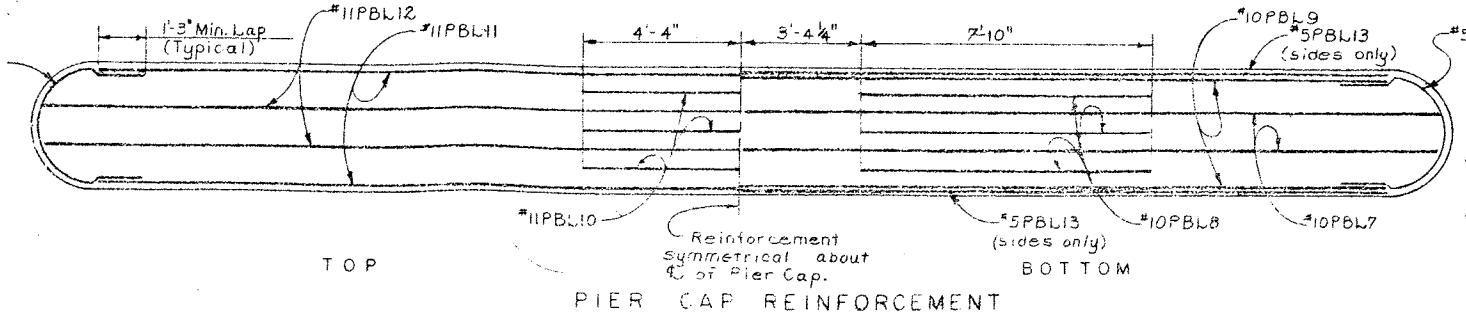

PIER CAP REINFORCEMENT

ELEVATIONS		
LOCATION	SOUTHBOUND	NORTHBOUND
A	403.20	403.00
B	406.70	406.50
C	427.85	427.83
D	431.85	431.83
E	428.35	428.48
F	432.35	432.48
G	433.42	433.55
H	433.31	433.35
I	433.15	433.13
J	432.92	432.91

PROJECT ENGINEER R. Packer
CHARGE OF F. Eckel
DESIGNED BY S. Rowe
DESIGN CHECKED BY N. A. Tappsas
DETAILED BY J.C. Thompson
DETAIL CHECKED BY Lloyd Faure

BRIDGE NO. 2
INTERSTATE ROUTE 481 OVER DEWITT YARDS
PIER 10 (SB & NB)

F.I.S.H. 70-7

FED. RD. REG. NO.	STATE	FEDERAL AID PROJECT NO.	SHEET NO.	TOTAL SHEETS
1	NEW YORK	I-690-3(28) I-481-2(116)	193	309

INTERSTATE ROUTE CONNECTION 570
BUTTERNUT INTERCHANGE (PHASE 2)
ONONDAGA COUNTY

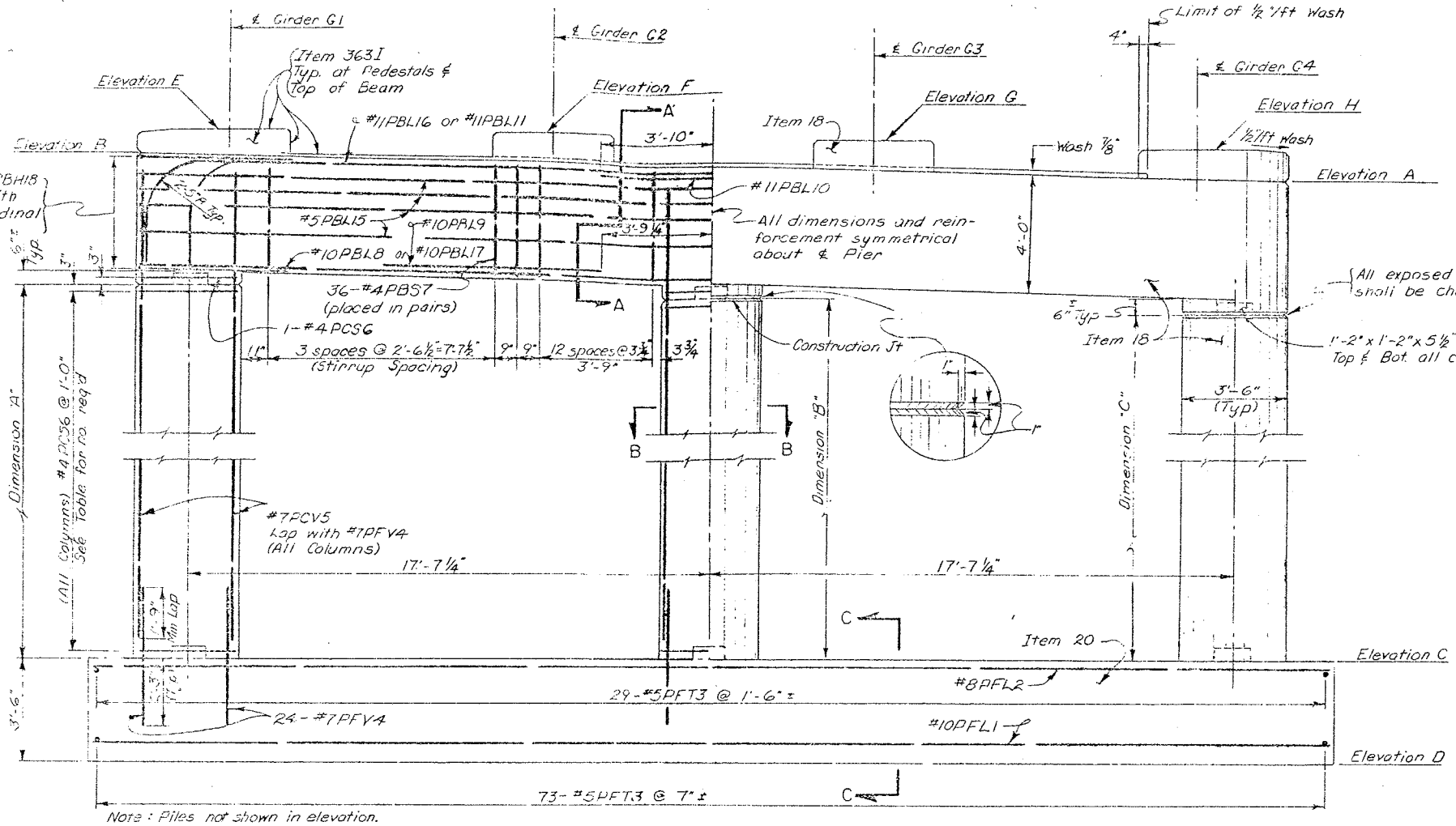

Note : Piles not shown in elevation.

ELEVATION
Scale : ⅜"=1'-0"

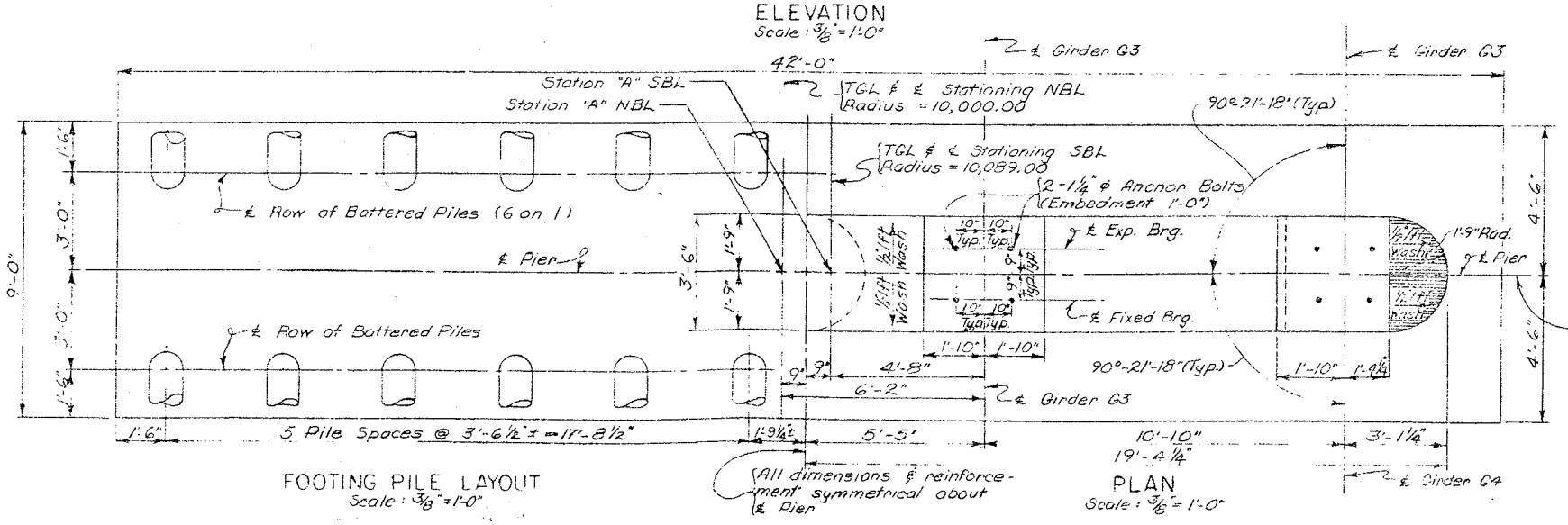

FOOTING PILE LAYOUT
Scale : ⅜"=1'-0"

(All dimensions & reinforcement symmetrical about ℄ Pier)

PLAN
Scale : ⅜"=1'-0"

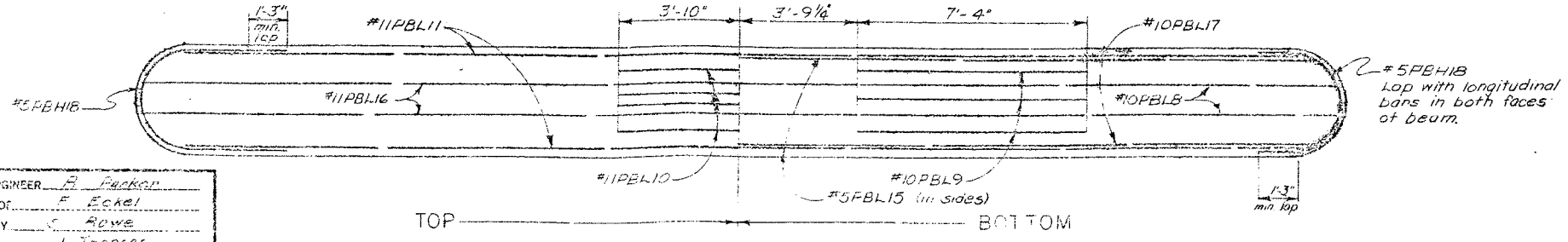

PIER CAP REINFORCEMENT
Scale : ⅜"=1'-0"

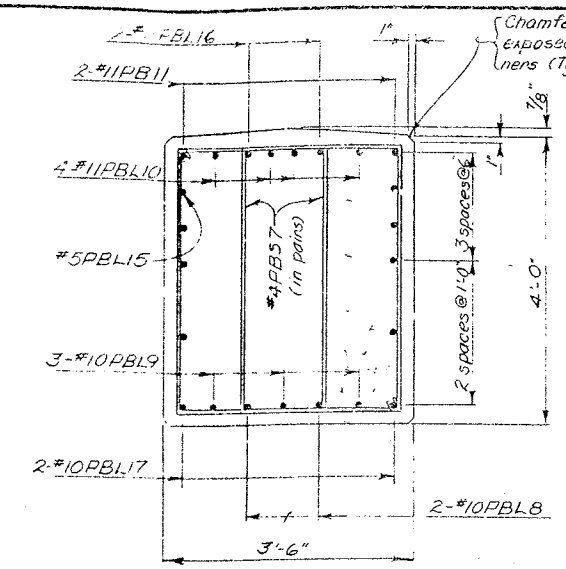

SECTION A-A
Scale : ¾"=1'-0"

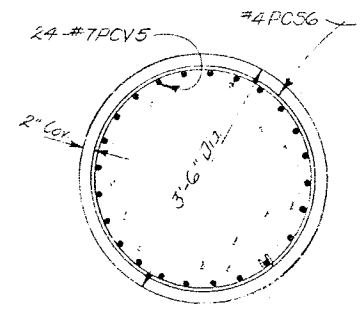

SECTION B-B
Scale : ¾"=1'-0"
Typical all columns

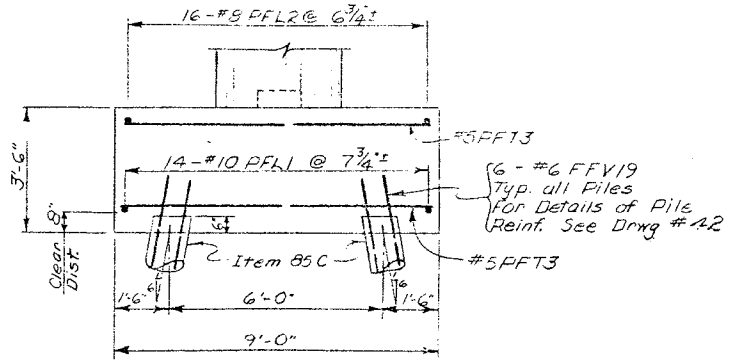

SECTION C-C
Scale : ⅜"=1'-0"

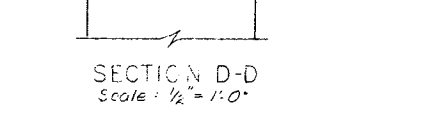

SECTION D-D
Scale : ½"=1'-0"

Note : All footing reinforcement shall have a min. cover of 3" unless otherwise shown.
All other reinforcement shall have a min. cover of 2" unless otherwise shown.
Estimated length of Cast-In-Place Concrete Piles = 65' at Piers 11 & 12 NB & SB.
For design purposes the Pile Load does not exceed 35 Tons Per Pile.

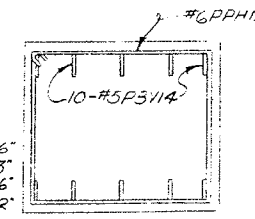

INTERIOR

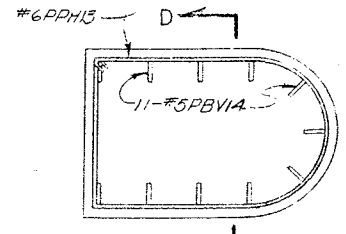

FASCIA

PEDESTALS
Scale : ½"=1'-0"

PIER DATA

DESCRIPTION	NORTHBOUND		SOUTHBOUND	
	PIER 11	PIER 12	PIER 11	PIER 12
ELEVATION A	429.04	425.81	429.03	425.77
" B	429.72	426.49	429.71	426.44
" C	406.30	406.40	406.30	406.40
" D	402.80	402.90	402.80	402.90
" E	430.72	427.49	430.71	427.45
" F	430.49	427.26	430.48	427.22
" G	430.27	427.04	430.26	427.00
" H	430.04	426.81	430.03	426.77
DIM "A"	18.92	15.59	18.91	15.54
"B"	18.58	15.25	18.57	15.21
"C"	18.24	14.91	18.23	14.87
NO. HOOPS	19 Per Col.	16 Per Col.	19 Per Col.	16 Per Col.
STATION "A"	232+22.76	233+46.76	233+88.86	235+13.86

PROJECT ENGINEER A. Farkas
CHARGE OF F. Eckel
DESIGNED BY K. Rowe
DESIGN CHECKED BY J. Toppass
DETAILED BY J. Duncant
FINAL CHECKED BY T.G. Keen

BRIDGE NO. 2
INTERSTATE ROUTE 481 OVER DEWITT YARDS

PIERS 11 & 12 (N.B. & S.B.)

DRAWING NO. 15 OF 30

F.I.S.H. 70-7

FED. RD. REG. NO.	STATE	FEDERAL AID PROJECT NO.	SHEET NO.	TOTAL SHEETS
1	NEW YORK	I-590-3(28) I-481-2(116)	194	309

INTERSTATE ROUTE CONNECTION 570
SUTTERSVILLE INTERCHANGE (PHASE 2)
ONONDAGA COUNTY

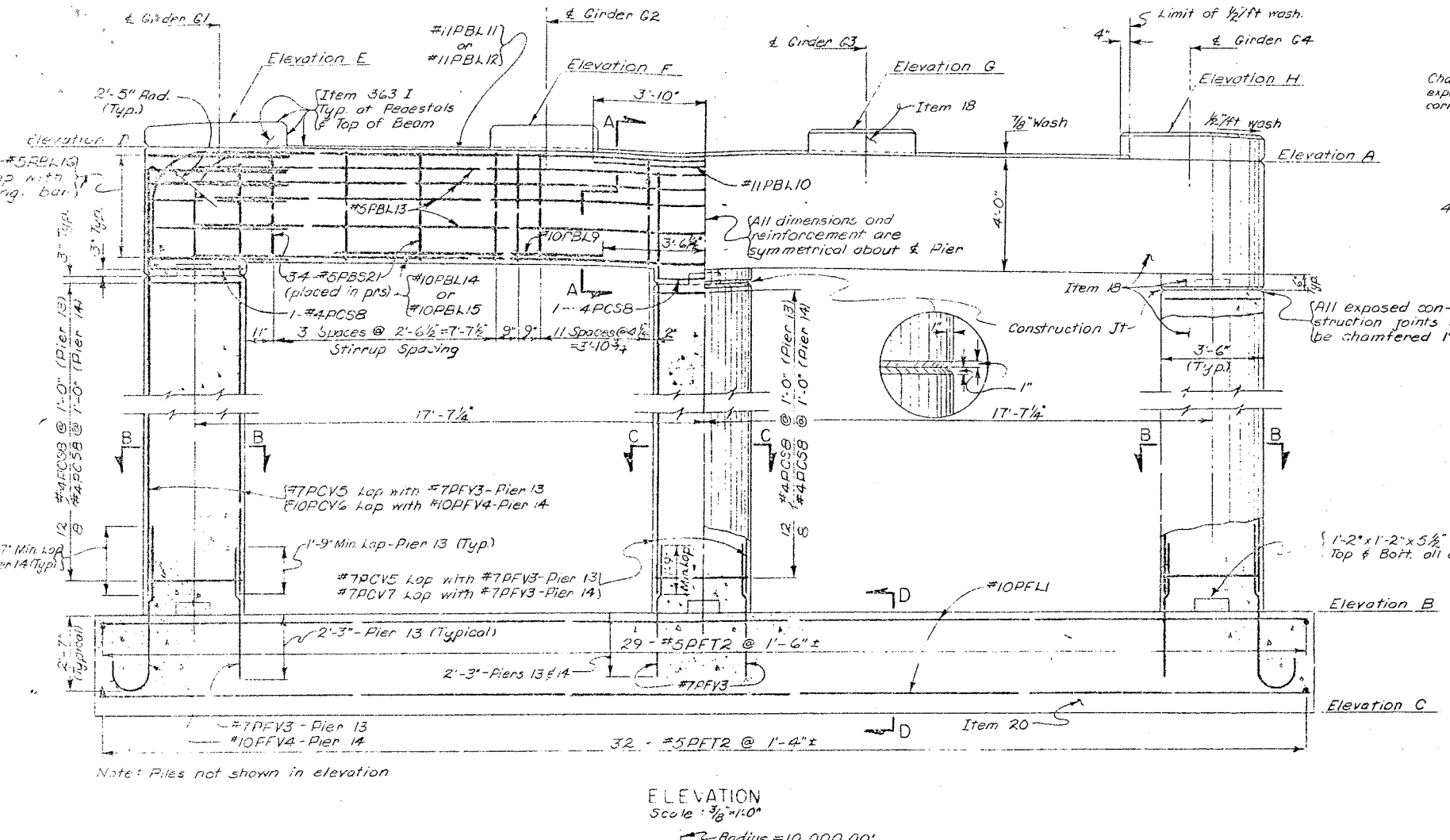

Note: Piles not shown in elevation

ELEVATION
Scale: ⅜"=1'-0"

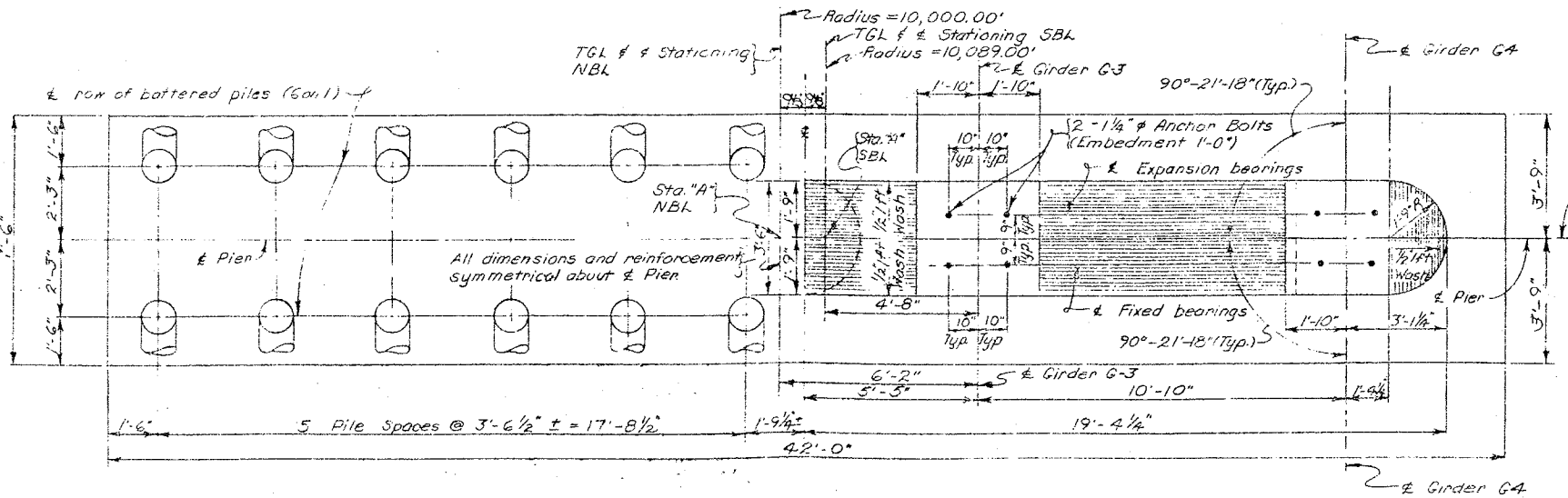

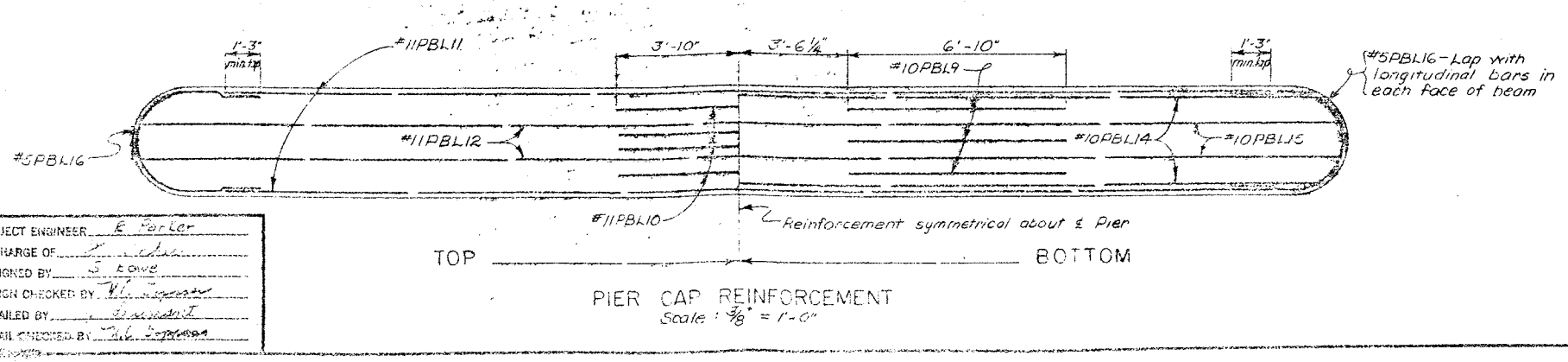

PIER CAP REINFORCEMENT
Scale: ⅜" = 1'-0"

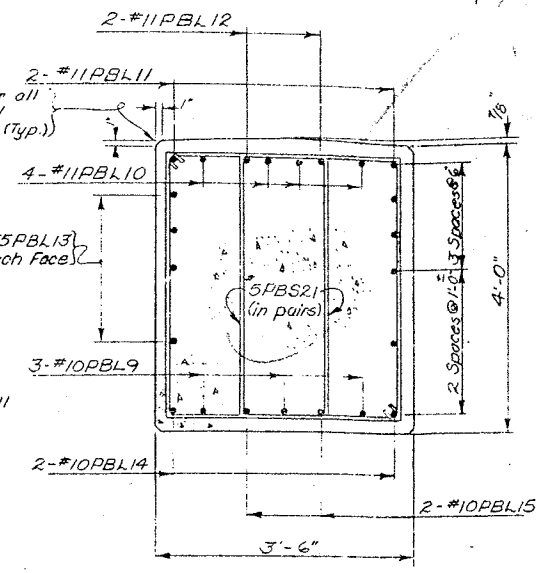

SECTION A-A
Scale: ¾"=1'-0"

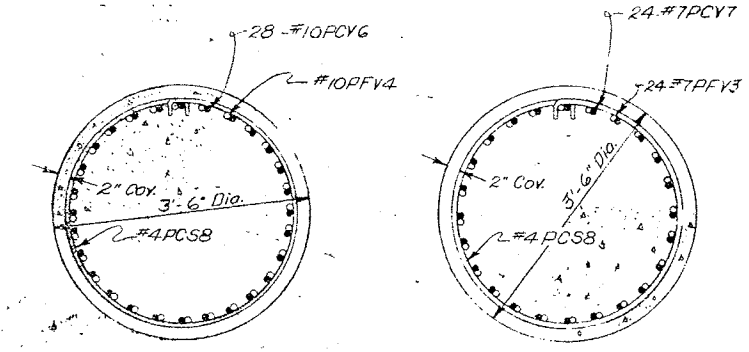

SECTION B-B, PIER 14 SECTION C-C, PIER 14
Scale: ¾"=1'-0"

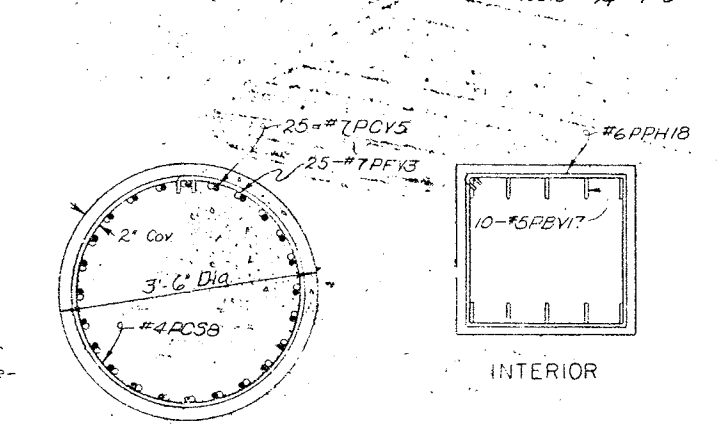

INTERIOR

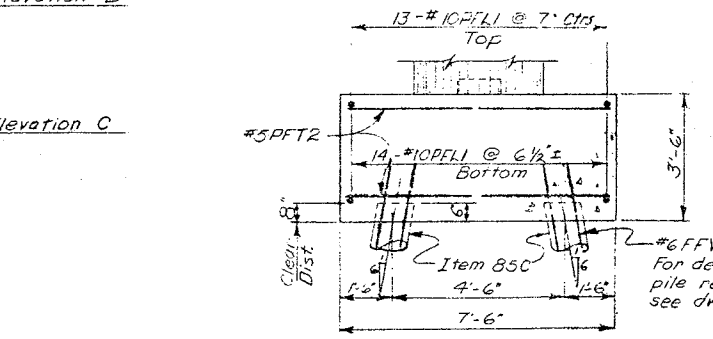

SECTION D-D
Scale: ⅜"=1'-0"

Pier 13 NB Az 264°33'51"
Pier 14 NB Az 265°36'29"
Pier 13 SB Az 264°39'57"
Pier 14 SB Az 265°22'33"

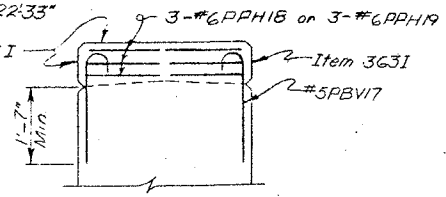

SECTION E-E
Scale: ½"=1'-0"

SECTION B-B & C-C, PIER 13
Scale: ¾"=1'-0"

STATION "A"		
PIER	NBL	SBL
#13	234+70.76	236+38.86
#14	235+94.76	237+63.86

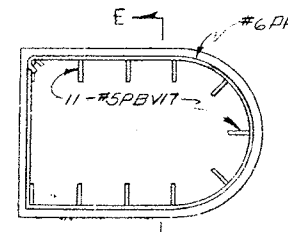

FASCIA PEDESTALS
Scale: ½"=1'-0"

Note:
All footing reinforcement shall have a min. cover of 3" unless otherwise shown.
All other reinforcement shall have a min. cover of 2" unless otherwise shown.
Estimated length of Cast-in-Place Concrete Piles = 65' Pier 13 SB, 60' Pier 13 NB & 60' Piers 14 NB & SB

For design purposes the pile load does not exceed 35 tons per pile.

PIER DATA

DESCRIPTION	NORTHBOUND		SOUTHBOUND	
	PIER 13	PIER 14	PIER 13	PIER 14
ELEVATION A	422.22	418.44	422.14	419.36
" B	406.70	407.00	406.70	407.00
" C	403.20	403.50	403.20	403.50
" D	422.90	419.12	422.81	419.03
" E	423.89	420.12	423.81	420.03
" F	423.67	419.90	423.59	419.81
" G	423.44	419.67	423.36	419.58
" H	423.22	419.44	423.14	419.36

PROJECT ENGINEER E. Porter
IN CHARGE OF [illegible]
DESIGNED BY S. Edme
DESIGN CHECKED BY W. [illegible]
DETAILED BY [illegible]
DETAIL CHECKED BY W. [illegible]

BRIDGE NO. 2
INTERSTATE ROUTE 481 OVER DEWITT YARDS

PIERS #13 & #14 (NB & SB)

DRAWING NO. 16 OF 50

F.I.S.H. 70-7

FED. RD. REG. NO.	STATE	FEDERAL AID PROJECT NO.	SHEET NO.	TOTAL SHEETS
1	NEW YORK	I-690-3(23) I-481-2(116)	195	309

INTERSTATE ROUTE CONNECTION 570
BUTTERNUT INTERCHANGE (PHASE 2)
ONONDAGA COUNTY

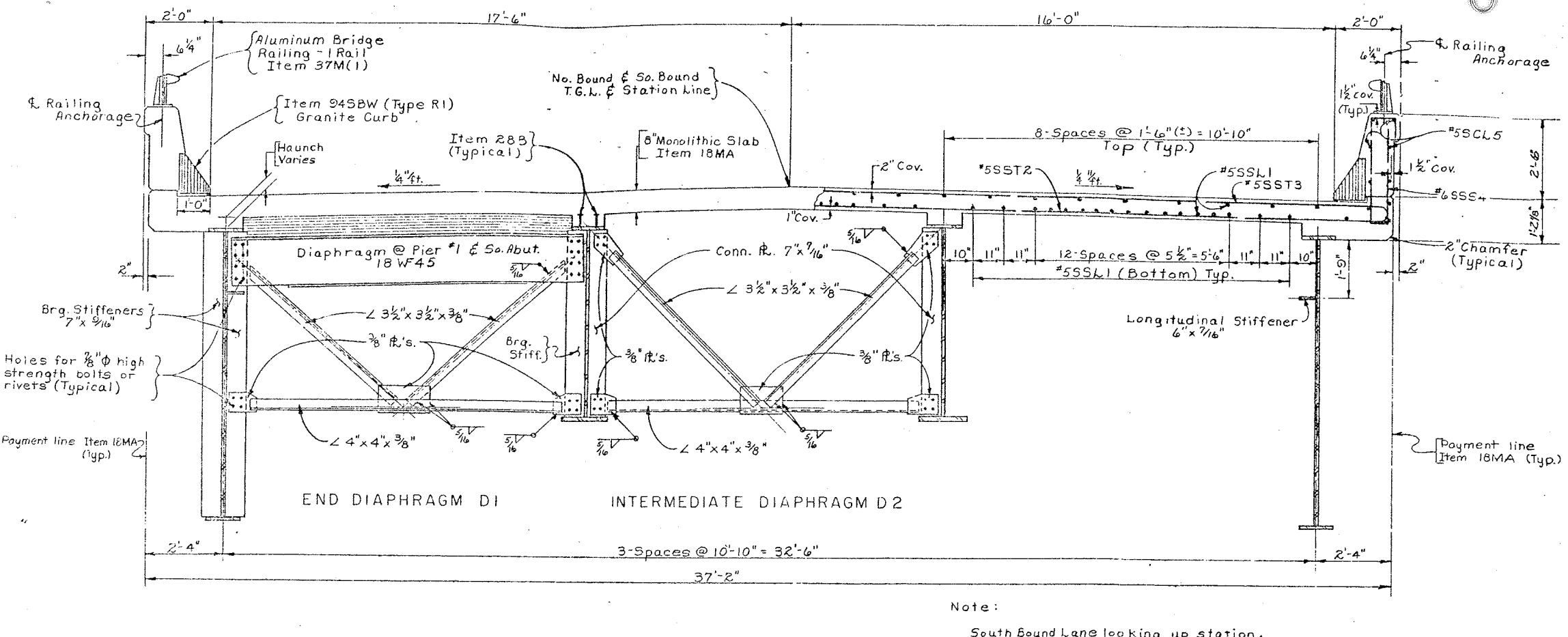

Note:

South Bound Lane looking up station.
North Bound Lane looking down station.

TRANSVERSE SECTION
Scale: ½" = 1'-0"

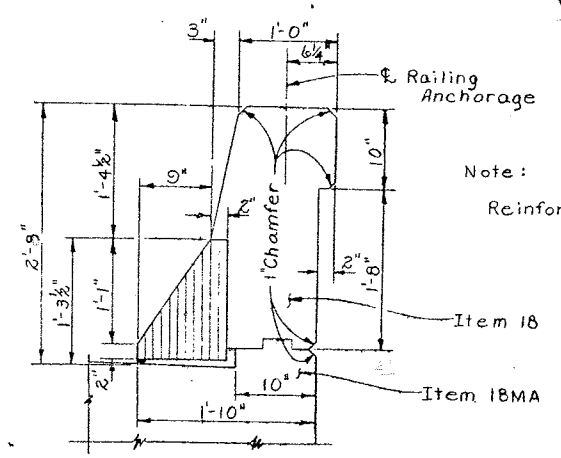

Note:

Reinforcement not shown.

PARAPET DETAIL
Scale: 1" = 1'-0"

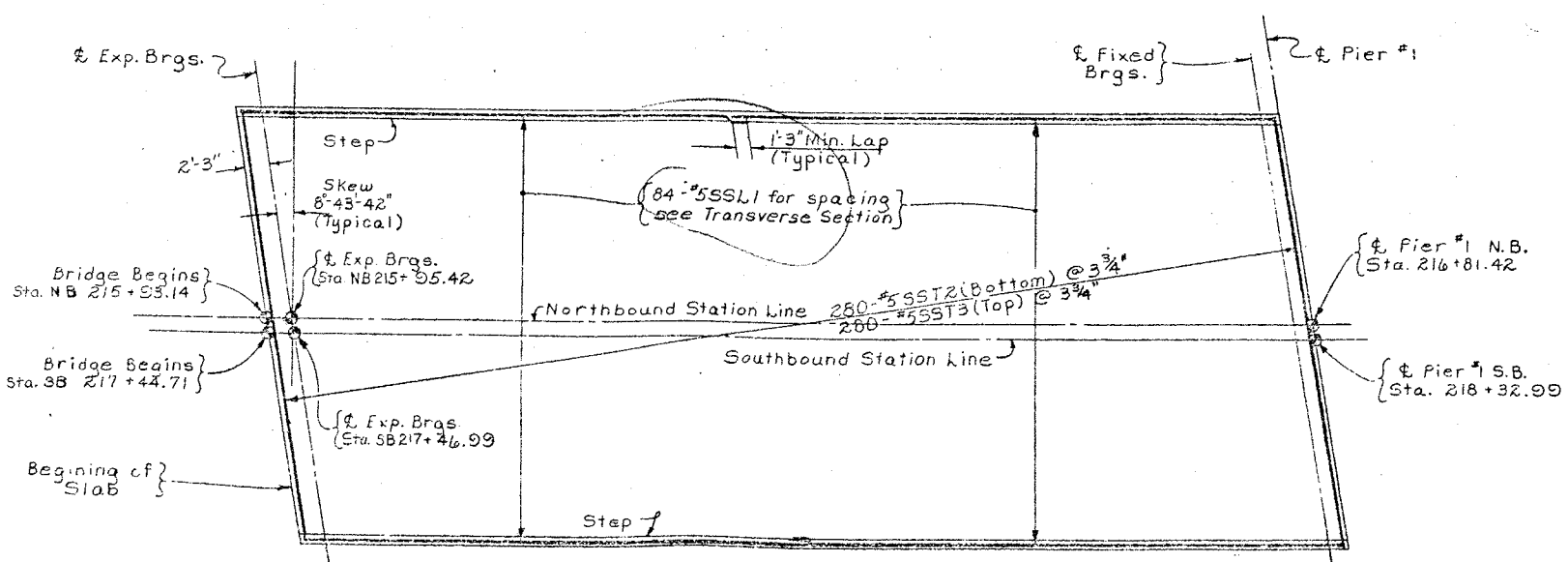

SLAB REINFORCEMENT PLAN
Scale: ⅛" = 1'-0"

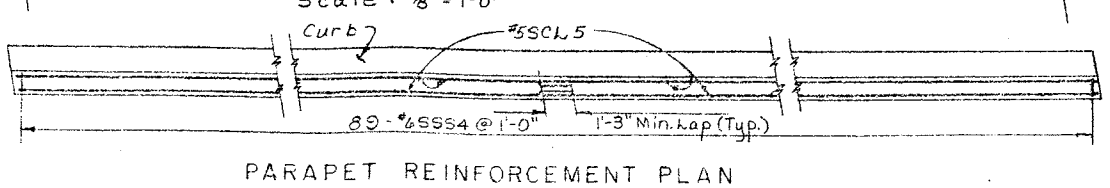

PARAPET REINFORCEMENT PLAN
Scale: ¼" = 1'-0"

Notes:

Holes for ⅞"φ rivets or high strength bolts may be omitted and welding substituted if contractor so elects. When the contractor elects to substitute the welded connection for the bolted connection shown, the amount of welding used shall be equivalent in strength to the bolts removed.

For details of Railing, Railing Anchorage and Granite Curbs see Dwg. # 35 & 36.

For Joint Details see Dwg. # 33.

PROJECT ENGINEER R. Parker
IN CHARGE OF F. Eckel
DESIGNED BY N. Toppses
DESIGN CHECKED BY R. Thimple
DETAILED BY J. C. Thompson
DETAIL CHECKED BY [illegible]

BRIDGE NO. 2
INTERSTATE ROUTE 481 OVER DEWITT YARDS

TRANSVERSE SECTION & SLAB PLAN
SPAN 1 N.B. & S.B.

DRAWING NO. 17 OF 50

FED. RD. REG. NO.	STATE	FEDERAL AID PROJECT NO.	SHEET NO.	TOTAL SHEETS
II	NEW YORK	I-690-8(28)	196	320
		I-481-2(16)		

INTERSTATE ROUTE CONNECTION 570
SYRACUSE PENETRATION (PHASE 2)
ONONDAGA COUNTY

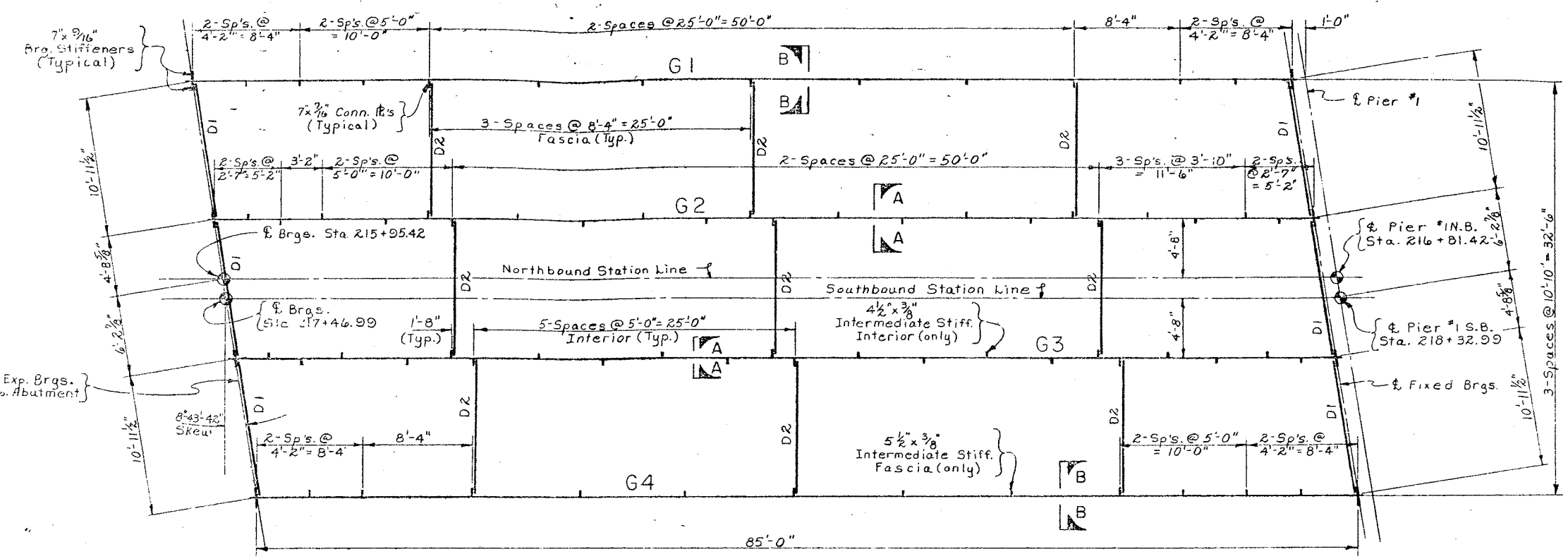

see Transverse Section for Diaphragms.

STEEL LAYOUT (S.B.&N.B.)

Scale : 3/16" = 1'-0"

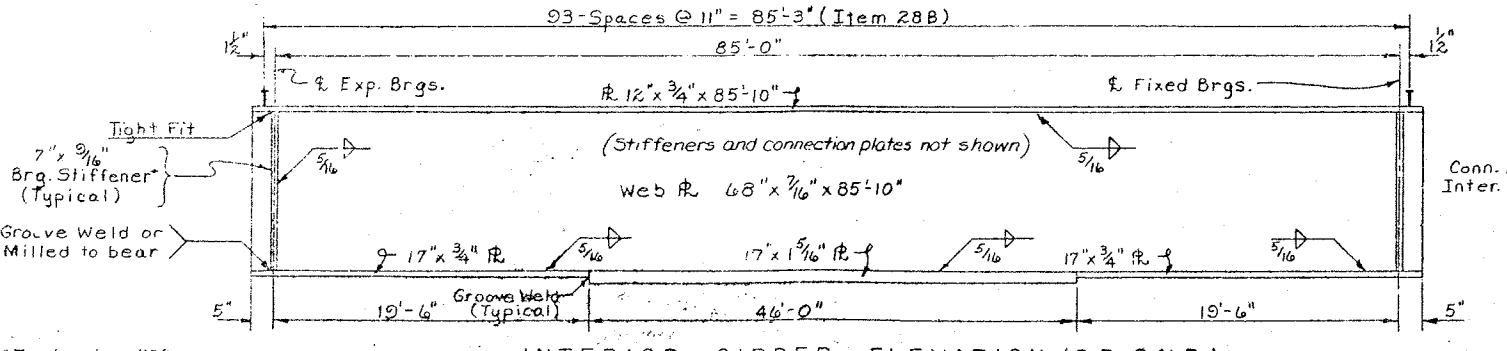

INTERIOR GIRDER ELEVATION (S.B.&N.B.)

Not to Scale

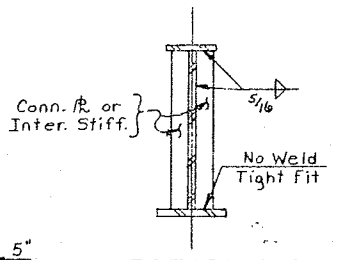

SECTION A-A

Not to Scale

*Two bearing stiffeners required at each end of girder.

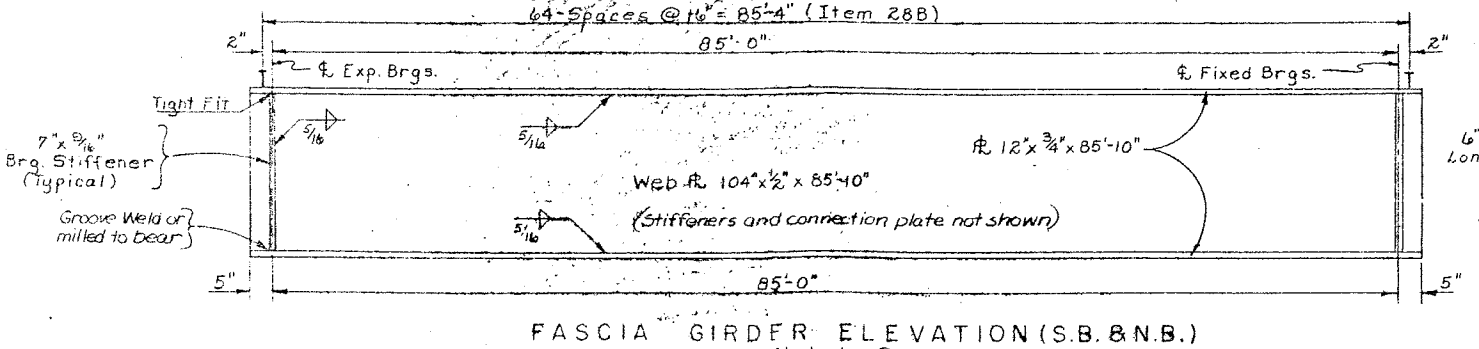

FASCIA GIRDER ELEVATION (S.B.&N.B.)

Not to Scale

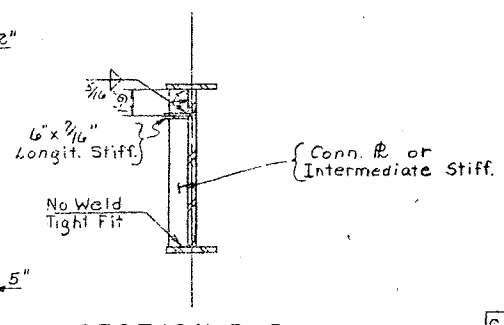

SECTION B-B

Not to Scale

Notes :

Web and flanges shall be ASTM designation A36 steel.

Stiffeners, Connection Plates, Diaphragm and Gusset Plates shall be ASTM designation A36 steel.

For Bearing Details see Drawing No's. 42 & 43.

Stud Shear Connectors shall be 6" high and placed in pairs. See Drawing No. 42 for additional details.

For Height of Haunch see Table of Haunch Heights Drawing No. 34.

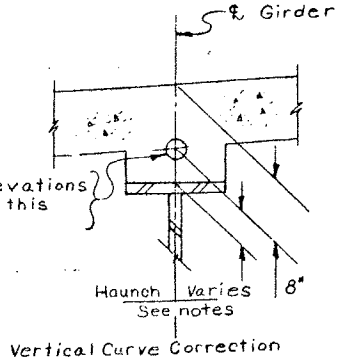

V.C.C. = Vertical Curve Correction

S.D.L. = Superimposed Dead Load, includes weight of railing.

GIRDER	SPAN	THEO. BOTTOM OF SLAB ELEVATIONS ℄ Exp. Brgs.	℄ Span	℄ Fix. Brgs.	DEFLECTIONS (FT.) STEEL	SLAB	SDL	TOTAL	CAMBER V.C.C. (ft.)	TOTAL (ft.)	TOTAL (in.)
G1 N.B.	1	446.55	447.12	447.65	.01	.03	.01	.05	.02	.07	⅞
G2 N.B.	1	446.80	447.40	447.90	.02	.08	.02	.12	.02	.14	1 11/16
G3 N.B.	1	446.79	447.36	447.89	.02	.08	.02	.12	.02	.14	1 11/16
G4 N.B.	1	446.59	447.16	447.68	.01	.03	.01	.05	.08	.07	⅞
G1 S.B.	1	446.34	446.92	447.46	.01	.03	.01	.05	.02	.07	⅞
G2 S.B.	1	446.59	447.17	447.71	.02	.08	.02	.12	.02	.14	1 11/16
G3 S.B.	1	446.64	447.22	447.76	.02	.08	.02	.12	.02	.14	1 11/16
G4 S.B.	1	446.44	447.02	447.55	.01	.03	.01	.05	.02	.07	⅞

BRIDGE NO. 2
INTERSTATE ROUTE 481 OVER DEWITT YARDS

SPAN 1 (S.B.&N.B.)

DRAWING NO. 18 OF 50

PROJECT ENGINEER F. Parker
IN CHARGE OF F. Fekel
DESIGNED BY N. Toepsee
DESIGN CHECKED BY R. Talmule
DETAILED BY J.C. Thompson
DETAILS CHECKED BY [illegible]

104
6
3

F.I.S.H. 70-7

FED. RD. REG. NO.	STATE	FEDERAL AID PROJECT NO.	SHEET NO.	TOTAL SHEETS
1	NEW YORK	I-690-3(129) I-481-2(116)	197	309

INTERSTATE ROUTE CONNECTION 570
BUTTERNUT INTERCHANGE (PHASE 2)
ONONDAGA COUNTY

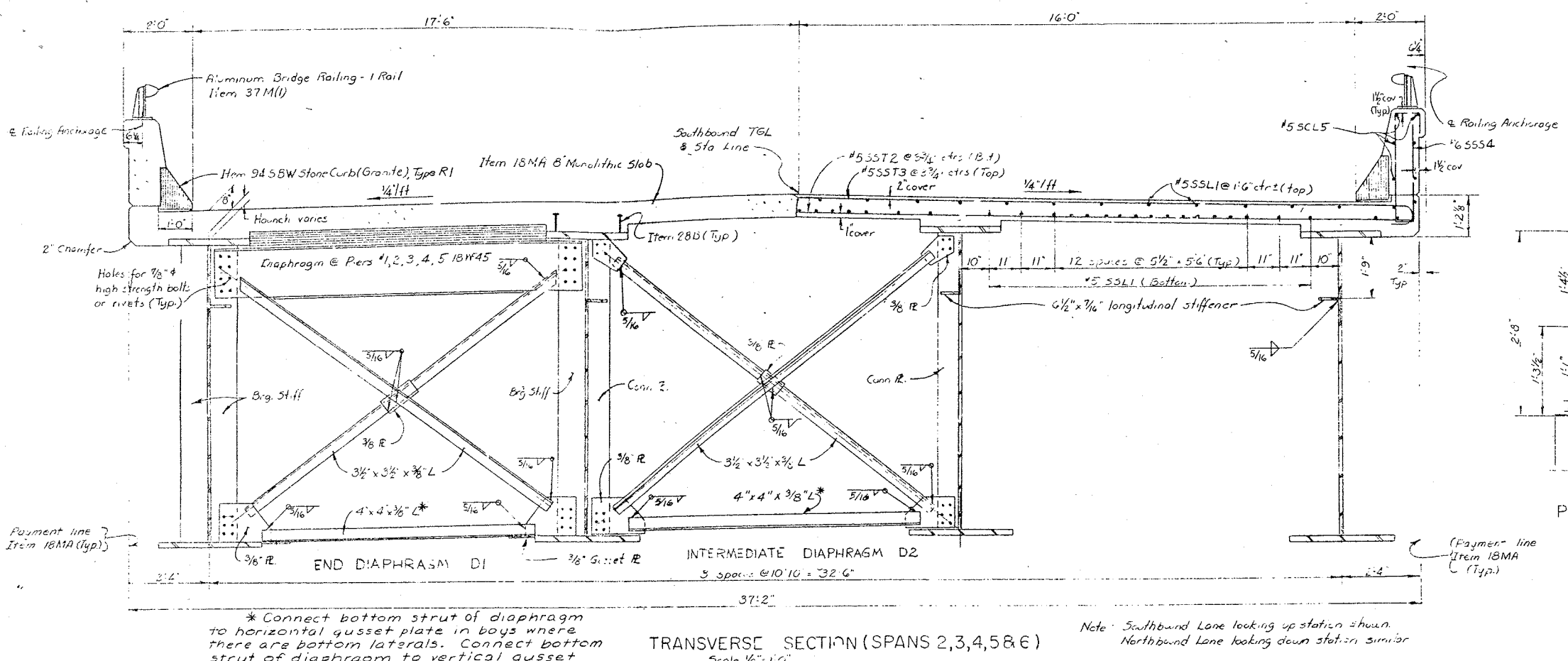

TRANSVERSE SECTION (SPANS 2,3,4,5 & 6)
Scale ½" = 1'-0"

Note: Southbound Lane looking up station shown. Northbound Lane looking down station similar

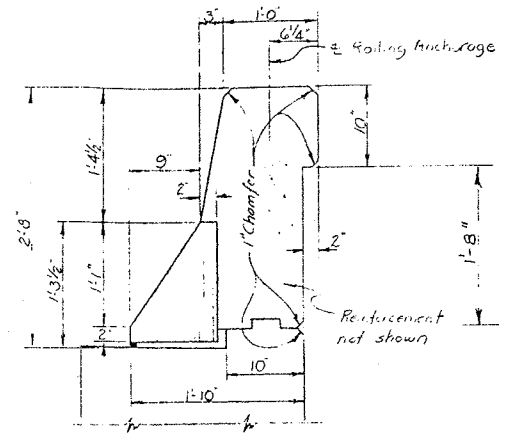

PARAPET DETAIL
Scale 1" = 1'-0"

* Connect bottom strut of diaphragm to horizontal gusset plate in bays where there are bottom laterals. Connect bottom strut of diaphragm to vertical gusset plates in bays where there are no bottom laterals.

or rivets

Note: Holes for ⅞" ϕ high strength bolts may be omitted and welding substituted if the contractor so elects. When the contractor elects to substitute the welded connection for the bolted connection shown, the amount of welding used shall be equivalent in strength to the bolts omitted.

For parapet railing details see drawing no. 35 & 36

For granite curb details see drawing no. 35

Steel meeting the minimum requirements of A.S.T.M. Designation A36 shall be used for all intermediate stiffeners, longitudinal stiffeners, connection plates, bearing stiffeners, diaphragm, bracing, & HM lateral bracing (except gusset plates), straight support angles, finger joint support plates and open armored joint support plates at the south end of span 2.

Finger joint plates, vertical side plates, and deflector plates at finger joints, and armoring angle and side plates at open joint at south end of span 2 shall be corrosion resistant steel A.S.T.M. Designation A 242.

The webs of the girders shall be A.S.T.M. Designation A441.

See details of individual spans for type of steel to be used in girder flanges and bottom lateral gusset plates.



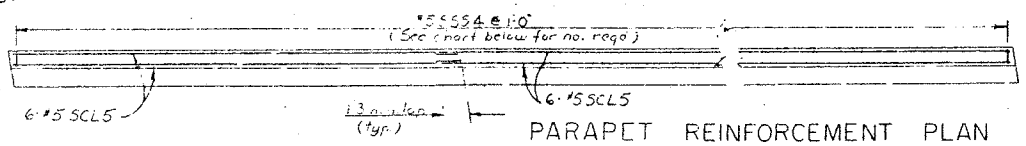

PARAPET REINFORCEMENT PLAN
No Scale

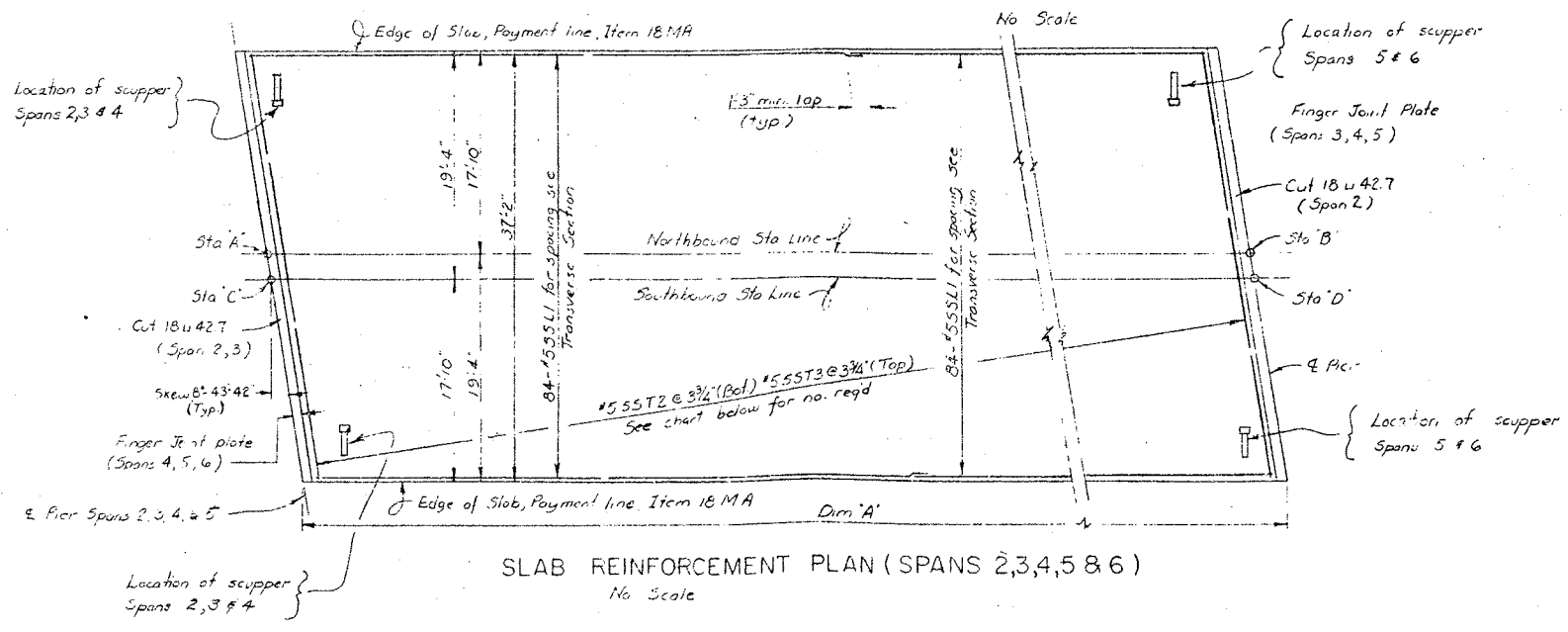

SLAB REINFORCEMENT PLAN (SPANS 2,3,4,5 & 6)
No Scale

SPAN	DIM "A"	STA 'A'	STA 'B'	STA 'C'	STA 'D'	SST2 & SST3 NO. REQ'D	SSS4 NO. REQ'D
2	156'-2" SB & NB	214+81.42	218+37.53	218+32.99	219+89.15	497	157
3	171'-2" SB & NB	218+37.59	220+08.76	219+89.15	221+60.32	544	172
4	198'-0" SB & NB	220+08.76	222+06.76	221+60.32	223+58.32	629	198
5	198'-0" SB & NB	222+06.76	224+04.76	223+58.32	225+56.32	629	198
6	198'-0" SB & NB	224+04.76	226+02.76	225+56.32	227+54.32	629	198

PROJECT ENGINEER E. Farber
IN CHARGE OF E. Farber
DESIGNED BY C. Frank
DESIGN CHECKED BY A. Tarpess
DETAILED BY C.H. Smith
DETAIL CHECKED BY T. Kelly

BRIDGE NO. 2
INTERSTATE ROUTE 481 OVER DEWITT YARDS

TRANSVERSE SECTION & SLAB PLAN
SPANS 2,3,4,5 & 6 NB & SB

DRAWING NO. 19 OF 50

F.I.S.H. 70-7

FED. RD. REG. NO.	STATE	FEDERAL AID PROJECT NO.	SHEET NO.	TOTAL SHEETS
1	NEW YORK	I-690-2(28) I-481-2(11S)	198	302

INTERSTATE ROUTE CONNECTION 690
SUPERIOR ARRANGEMENT (PHASE 2)
ONONDAGA COUNTY

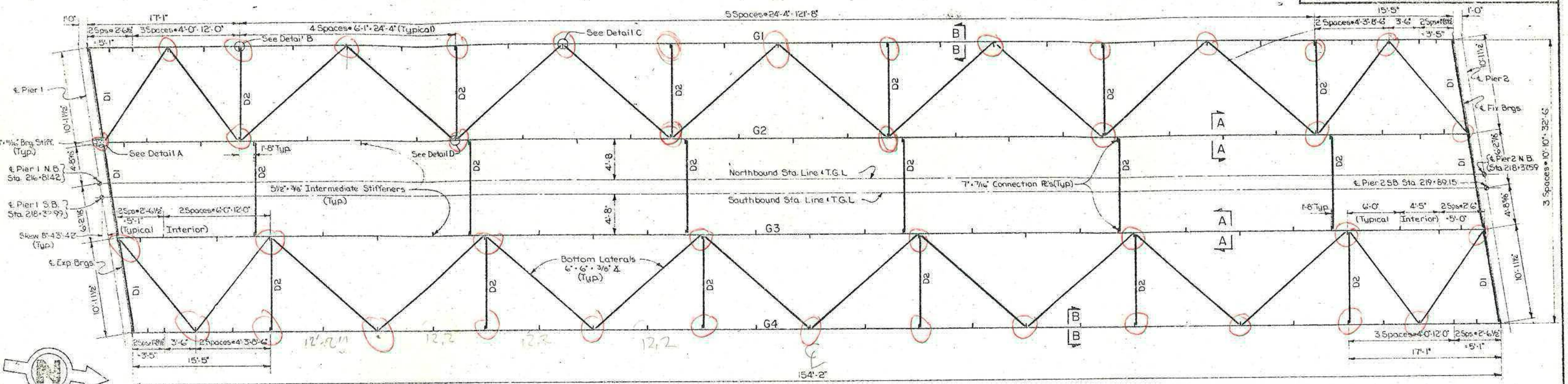

Notes: See Transverse Section for Diaphragms and Lateral Bracing.
See Drawing No. 22 for Cross Lateral Bracing Details A, B, C & D.

STEEL FRAMING PLAN NB & SB
Scale: 3/16" = 1'-0"

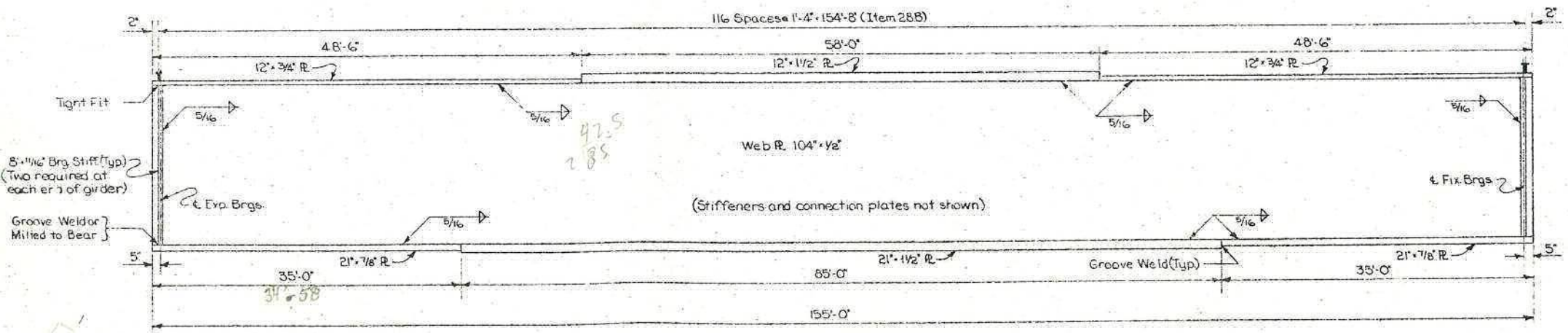

FASCIA & INTERIOR GIRDER ELEVATION NB & SB
Not to Scale

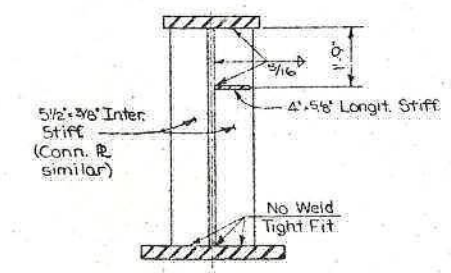

SECTION A-A
Not to Scale

Notes:
Web and flanges shall be A.S.T.M designation A 441 Steel.
Stiffeners, connection plates, diaphragms, lateral bracing and gusset plates shall be A.S.T.M. designation A36 Steel.
For details of bearings see Dwg. No. 42 & 43.
Stud Shear Connectors shall be 6" high.

GIRDER	SPAN	THEO. BOTTOM OF SLAB ELEVATIONS ℄ EXP BRGS	℄ SPAN	℄ FIX BRGS	DEFLECTIONS (FT.) STEEL	SLAB	SDL	TOT.	CAMBER V.C.C (FT.)	TOTAL (FT.)	(IN.)
G1 NB	2	447.67	448.52	449.23	.08	.16	.07	.31	.07	.38	4 5/16
G2 NB	2	447.92	448.76	449.47	.08	.24	.07	.39	.07	.46	5 ½
G3 NB	2	447.91	448.75	449.45	.08	.24	.07	.39	.07	.46	5 ½
G4 NB	2	447.70	448.54	449.24	.08	.16	.07	.31	.07	.38	4 5/16
G1 SB	2	447.48	448.35	449.08	.08	.16	.07	.31	.07	.38	4 5/16
G2 SB	2	447.73	448.60	449.32	.08	.24	.07	.39	.07	.46	5 ½
G3 SB	2	447.78	448.65	449.37	.08	.24	.07	.39	.07	.46	5 ½
G4 SB	2	447.58	448.44	449.16	.08	.16	.07	.31	.07	.38	4 5/16

V.C.C - Vertical Curve Correction
S.D.L. - Superimposed Dead Load, includes weight of railing.

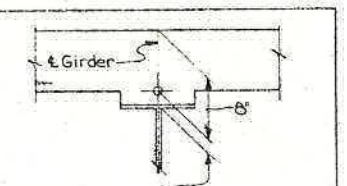

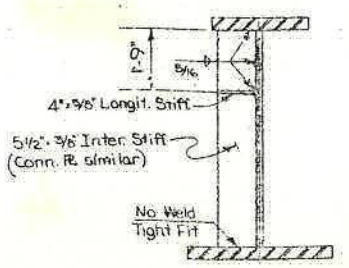

SECTION B-B
Not to Scale

PROJECT ENGINEER R. L. Parker
IN CHARGE OF F. Eckel
DESIGNED BY N. A. Tsoses
DESIGN CHECKED BY R. Thimble
DETAILED BY J. F. Darcy
FINAL CHECKED BY [illegible]

BRIDGE NO. 2
INTERSTATE ROUTE 381 OVER DEWITT YARDS

SPAN 2 FRAMING PLAN

DRAWING NO. 20 OF 50

F.I.S.H. 70-7

FED. RD. REG. NO.	STATE	FEDERAL AID PROJECT NO.	SHEET NO.	TOTAL SHEETS
1	NEW YORK	I-690-3(28) I-481-2(116)	199	309

INTERSTATE ROUTE CONNECTION 570
BUTTERNUT INTERCHANGE (PHASE 2)
ONONDAGA COUNTY

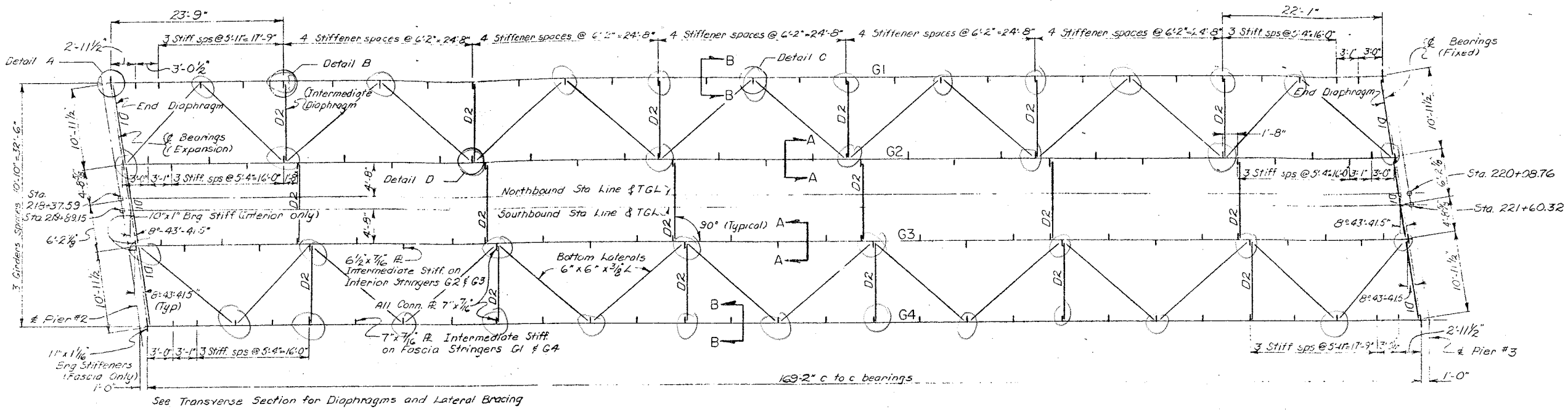

STEEL LAYOUT (SPAN #3 NB & SB)
Scale ⅛" = 1'-0"

Note: Stud Shear Connectors shall be 6" high.

For Bearings Details see Drawing # 42 and 43
For Joint Details see Drawing # 31
For Trough Details see Drawing # 39

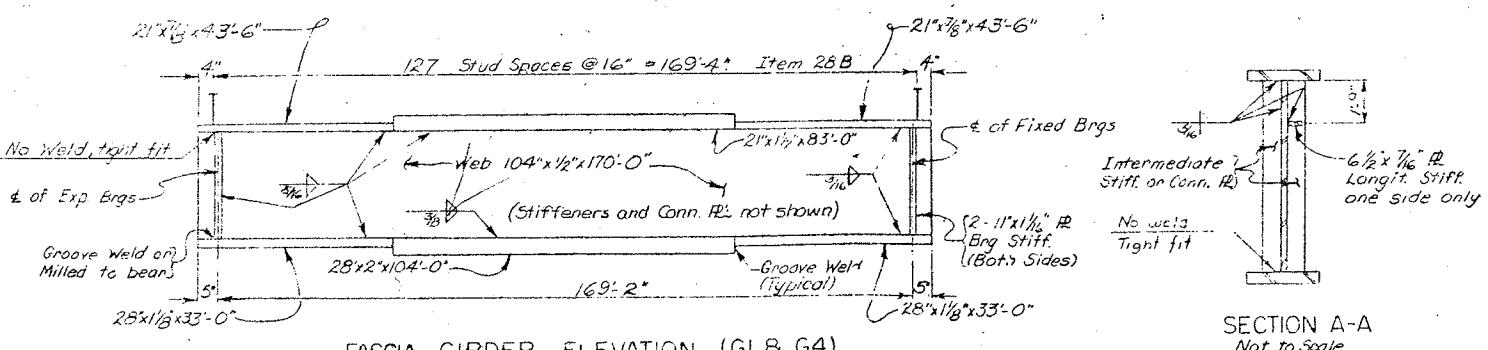

FASCIA GIRDER ELEVATION (G1 & G4)
Not to Scale

SECTION A-A
Not to Scale
Note: All Conn. Plates 7"x7/16"

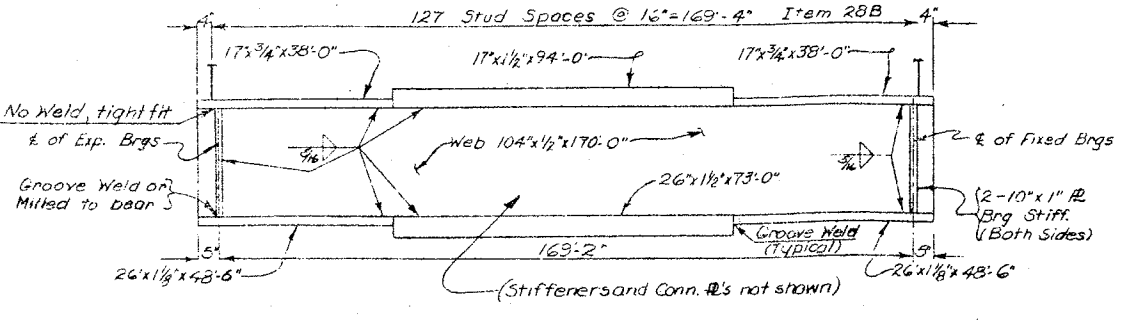

INTERIOR GIRDER ELEVATION (G2 & G3)
Not to Scale

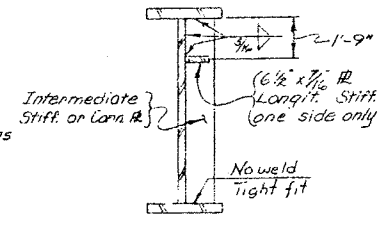

SECTION B-B
Not to Scale
Note: All Conn. Plates 7"x7/16"

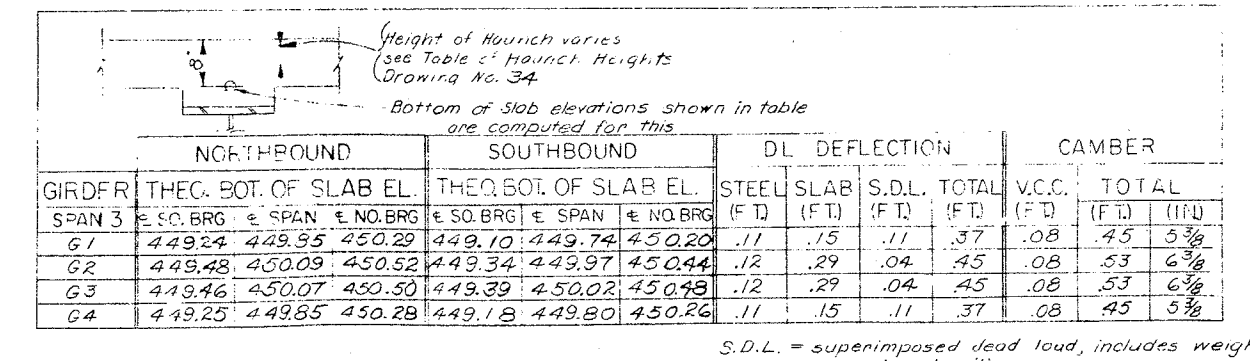

GIRDER	NORTHBOUND			SOUTHBOUND			DL DEFLECTION				CAMBER		
	THEO. BOT. OF SLAB EL.			THEO. BOT. OF SLAB EL.			STEEL	SLAB	S.D.L.	TOTAL	V.C.C.	TOTAL	
SPAN 3	℄ SO. BRG	℄ SPAN	℄ NO. BRG	℄ SO. BRG	℄ SPAN	℄ NO. BRG	(FT.)	(FT.)	(FT.)	(FT.)	(FT.)	(FT.)	(IN.)
G1	449.24	449.95	450.29	449.10	449.74	450.20	.11	.15	.11	.37	.08	.45	5⅜
G2	449.48	450.09	450.52	449.34	449.97	450.44	.12	.29	.04	.45	.08	.53	6⅜
G3	449.46	450.07	450.50	449.39	450.02	450.48	.12	.29	.04	.45	.08	.53	6⅜
G4	449.25	449.85	450.28	449.18	449.80	450.26	.11	.15	.11	.37	.08	.45	5⅜

S.D.L. = superimposed dead load, includes weight of parapet and railing.
V.C.C. = vertical curve correction

Top of Bottom Flange when bottom flange is in tension
Bottom of Top Flange when top flange is in tension

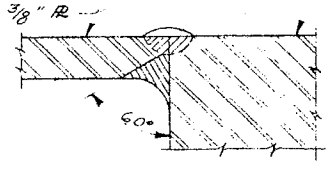

DETAIL "1

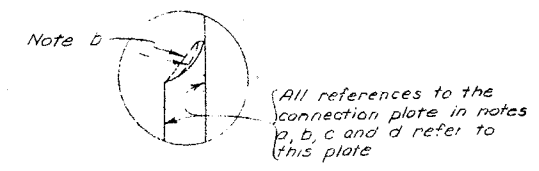

DETAIL "2

Note:
a. The connection plate shall be prepared and welded as a single bevel groove weld as shown in Detail #1. It shall then be Air Carbon-Arc gauged from the second side into sound weld metal and then welded as detailed. All welding shall be in the flat or "downhand" position.
b. The plate may be of any shape that will provide often welding, cutting, and finish grinding a smooth transition from the flange edge at a minimum radius of 12".
c. Both the connection plate and flange are to be the same type of steel.
d. Field welding to the connection plate will not be permitted.

LATERAL BRACING DETAILS
Not to Scale

The webs, flanges and gusset plates for bottom lateral bracing for the Span 3 girders shall be A.S.T.M. Designation A441 steel. Stiffeners, diaphragms, bearings, and bottom lateral bracing (except gusset plates) shall be A.S.T.M. A36 steel.

For additional details of bottom lateral bracing see drawing No. 22

PROJECT ENGINEER A. PARKER
IN CHARGE OF E.D. ECKEL
DESIGNED BY C. FANE
DESIGN CHECKED BY K. JENSEN
DETAILED BY THE Dunrel
DETAIL CHECKED BY Carl Smith

BRIDGE NO. 2
INTERSTATE ROUTE 481 OVER DEWITT YARDS

SPAN 3

DRAWING NO. 21 OF 30

F.I.S.H. 70-7

FED. RD. REG. NO.	STATE	FEDERAL AID PROJECT NO.	SHEET NO.	TOTAL SHEETS
1	NEW YORK	I-490-8(28) I-481-2(116)	200	309

INTERSTATE ROUTE 490 CONNECTION 870
EASTERN BYPASSING (PHASE 2)
ONONDAGA COUNTY

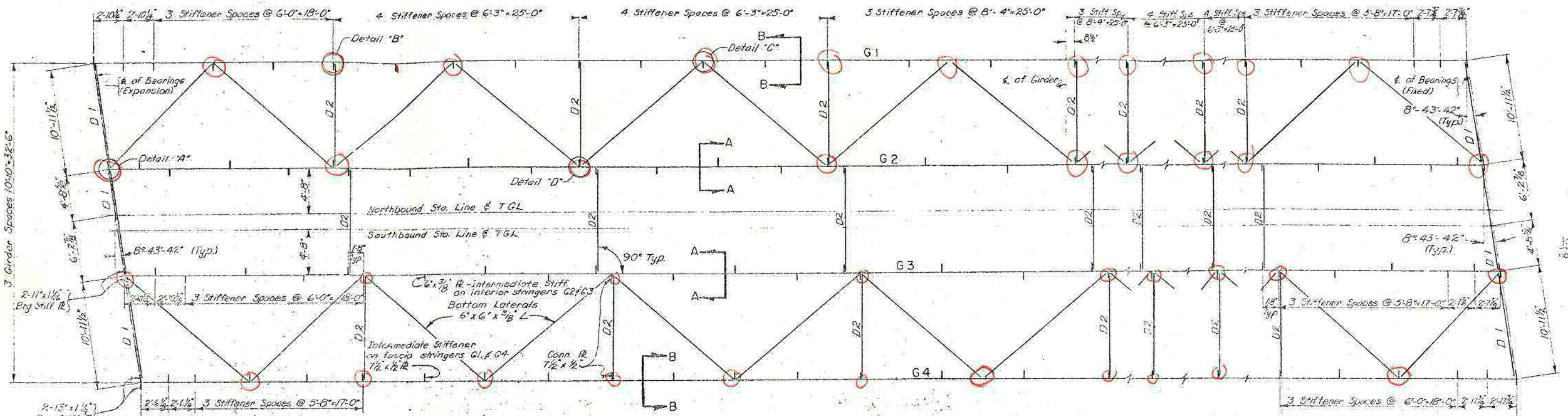

STEEL LAYOUT — SPANS 4,5 & 6 (NB & SB)
Scale: 3/16"=1'-0"

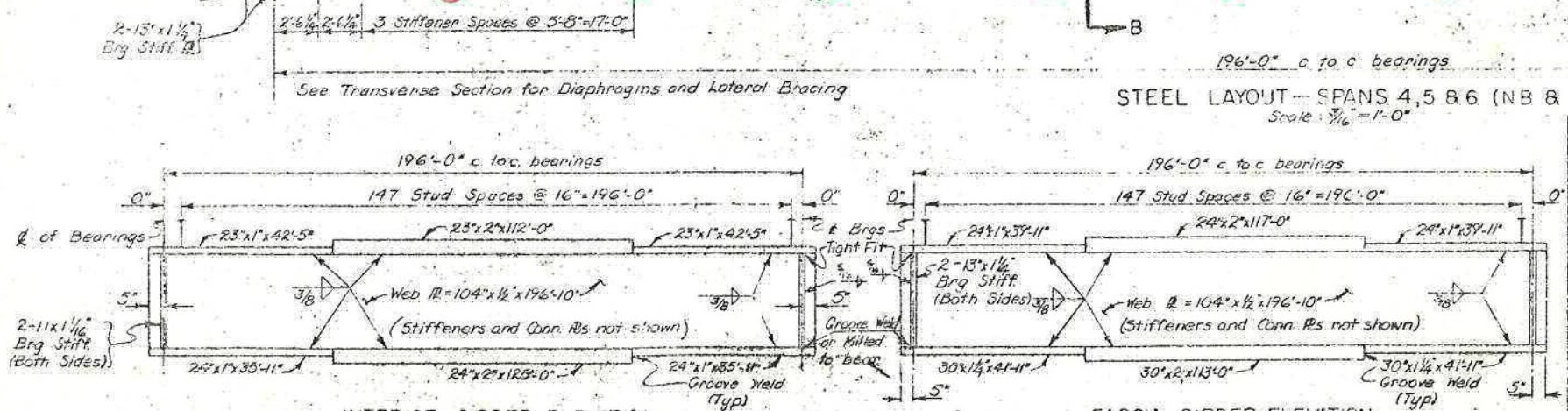

INTERIOR GIRDER ELEVATION
Not to Scale

FASCIA GIRDER ELEVATION
Not to Scale

GIRDER	SOUTHBOUND THEO. BOT. OF SLAB EL. ℄ SO. BRG	℄ SPAN	℄ NO. BRG	NORTHBOUND THEO. BOT. OF SLAB EL. ℄ SO. BRG	℄ SPAN	℄ NO. BRG	DL DEFLECTION (FT) STEEL	SLAB	SDL	TOTAL DL	CAMBER VCC(FT)	TOTAL FEET	TOTAL INCHES
SPAN 4													
G1	450.21	450.54	450.63	450.30	450.53	450.66	0.172'	0.212'	0.168'	0.552'	0.113'	0.665'	8"
G2	450.45	450.77	450.86	450.53	450.82	450.89	0.178'	0.378'	0.062'	0.618'	0.113'	0.731'	8 13/16"
G3	450.48	450.80	450.89	450.51	450.80	450.85	0.178'	0.378'	0.062'	0.618'	0.113'	0.731'	8 13/16"
G4	450.27	450.58	450.67	450.29	450.57	450.63	0.172'	0.212'	0.168'	0.552'	0.113'	0.665'	8"
SPAN 5													
G1	450.63	450.30	450.14	450.66	450.30	450.10	0.172'	0.212'	0.165'	0.552'	0.113'	0.665'	8"
G2	450.86	450.72	450.36	450.89	450.72	450.32	0.178'	0.378'	0.062'	0.618'	0.113'	0.731'	8 13/16"
G3	450.89	450.75	450.39	450.85	450.68	450.28	0.178'	0.378'	0.062'	0.618'	0.113'	0.731'	8 13/16"
G4	450.66	450.52	450.15	450.63	450.45	450.05	0.172'	0.212'	0.168'	0.552'	0.113'	0.665'	8"
SPAN 6													
G1	450.13	449.54	448.72	450.09	449.47	448.62	0.172'	0.212'	0.168'	0.552'	0.113'	0.665'	8"
G2	450.35	449.75	448.93	450.31	449.68	448.83	0.178'	0.378'	0.062'	0.618'	0.113'	0.731'	8 13/16"
G3	450.37	449.77	448.94	450.27	449.64	448.78	0.178'	0.378'	0.062'	0.618'	0.113'	0.731'	8 13/16"
G4	450.16	449.53	448.70	450.04	449.40	448.54	0.172'	0.212'	0.168'	0.552'	0.113'	0.665'	8"

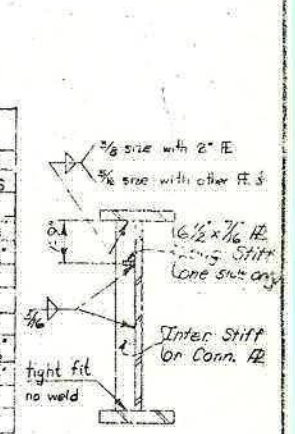

SECTION B-B
Not to Scale

SPANS 4, 5 & 6

1. The steel in the flanges and gusset plates for bottom lateral bracing shall be A.S.T.M. Designation A441 Modified.
2. The steel in the webs of the girders shall be A.S.T.M. Designation A441.
3. The steel in the stiffeners, diaphragms, bearings, and bottom lateral bracing (except gusset plates) shall be A.S.T.M. Designation A36.

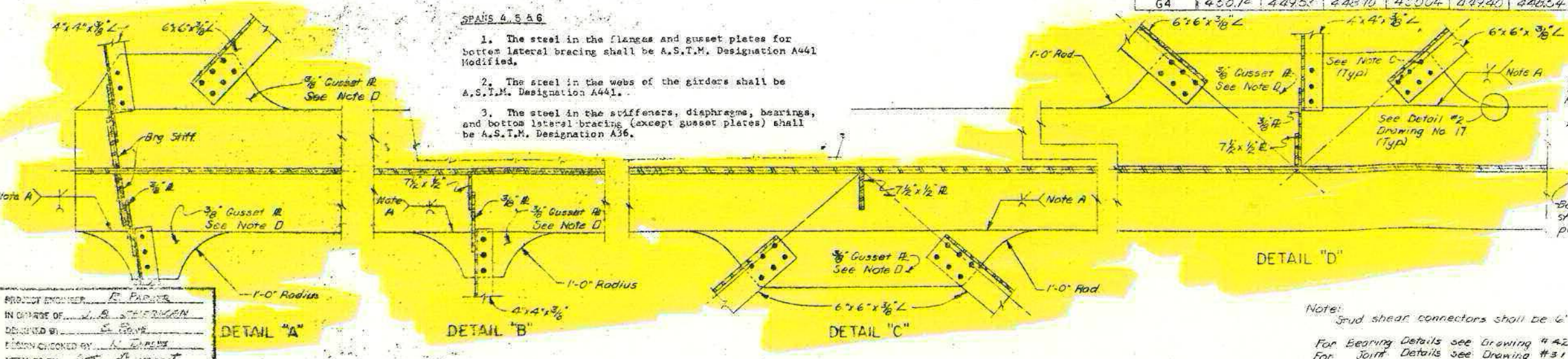

Height of Haunch varies see Table of Haunch Hgts Drg No 34

℄ Girder

Bottom of slab elevations shown in table are computed for this point.

Note:
Stud shear connectors shall be 6" high

For Bearing Details see Drawing # 42 and #43
For Joint Details see Drawing #31
For Trough Details see Drawing #33

Note:
A. The connection plate shall be prepared and welded as a single bevel groove weld as shown in Detail #1. It shall then be Air Carbon-Arc gouged from the second side into sound weld metal and then welded as detailed. All welding shall be in the flat or "downhand" position.
B. The plate may be of any shape that will provide after welding, cutting, and finish grinding a smooth transition from the flange edge of a minimum radius of 12".
C. Lateral bracing shall be attached to gusset plates with ⅞" ø high strength bolts. Field welding will not be permitted.
D. The gusset plate shall be the same type of steel as the flange to which it is welded.

PROJECT ENGINEER F. PARKER
IN CHARGE OF W. B. STEPHENSON
DESIGNED BY S. FOWLE
DESIGN CHECKED BY M. DANEVE
APPROVED BY [illegible]
DRAWN BY D.H. Smith

BRIDGE NO. 2
INTERSTATE ROUTE 481 OVER DEWITT YARDS
SPANS 4,5 & 6
DRAWING NO. 22 OF 50

F.I.S.H. 70-7

FED. RD. REG. NO.	STATE	FEDERAL AID PROJECT NO.	SHEET NO.	TOTAL SHEETS
1	NEW YORK	I-690-3(28) I-481-2(16)	201	309

INTERSTATE ROUTE CONNECTION 570
DEWITT INTERCHANGE (PHASE 2)
ONONDAGA COUNTY

Aluminum Bridge Railing - I Rail
(Item 31 M(1))

Item 28B, Stud Shear Connectors

#555L1 bottom (Typ.)

8" Monolithic Slab
Item 18MA

Granite Curb, Item 945BW
Type R1

#555T3 @ 3¾" ctrs (top)
#555T2 @ 3¾" ctrs (bottom)

varies (southbound)
⅛"/ft (northbound)

Southbound T.G.L.
℄ Sta. Line

12-Spaces @ 6½" = 5'-6"

8 - Equal spaces @ 1'-6" ± ctrs = 10'-10"

#555L1 lap (Typ.)

2" Min. haunch, varies
¼"/ft (southbound)
Varies (northbound)

#555L1

2" Cover

1" Cover

℄ Railing Anchorage

#55CL5

#555S4 @ 1'-0" ctrs

1½" Cover (Typ)

1'-2⅛" SB
varies NB

℄ Railing Anchorage
Item IB

1" Chamfer (Typ.)

1'-2⅛" NB
varies SB

2" Chamfer

Holes for ⅞" ϕ high strength bolts or rivets (Typ.)

18 WF 45

Brg Stiff.

Conn PL

L 3½ x 3½ x ⅜

L 4 x 4 x ⅜

104" web depth

Payment line (Item 18MA (Typ.))

END DIAPHRAGM—D3

INTERMEDIATE DIAPHRAGM—D4

END DIAPHRAGM—D5

2'-0" | 17'-6" | 16'-0" | 2'-0"

2'-4" | 3 Spaces @ 10'-10" = 32'-6" | 2'-4"

37'-2"

Note: S.B. looking upstation.
N.B. looking downstation.

TRANSVERSE SECTION - SPANS 7, 8 AND 9
Scale: ½" = 1'-0"

Note: Holes for ⅞" ϕ high strength bolts or rivets may be omitted and welding substituted if the contractor so elects. When the contractor elects to substitute the welded connection for the bolted connection shown, the amount of welding used shall be equivalent in strength to the bolts omitted.

For detail of Railing see Drawing #36

℄ Railing Anchorage

Reinforcement not shown

1'-0" | 6¼" | 10" | 9" | 2" | 1" Chamfer | 1'-1" | 1'-10"

PARAPET DETAIL
Scale 1" = 1'-0"

3⅛" | 1'-1" | 2'-8"

3⅛" | 66 web depth | web depth varies

3/8" PL | 5/16 | L 3½ x 3½ x ⅜ | Conn PL | L 4 x 4 x ⅜ | ℄ interior girder | ℄ fascia girder | 10'-10"

INTERMEDIATE DIAPHRAGM-D6
Scale: ½" = 1'-0"

8⅞" | ℄ of Pier | ℄ of Expansion Bearing | 9" | Step | 1'-3" min. lap (Typ.) | Edge of slab, pay line Item 18MA (Typ.) | Location of Scupper | ℄ of Fixed Bearing

Edge of Slab

Sta. 226 + 02.76 — Span 7
Sta. 227 + 26.76 — Span 8
Sta. 228 + 50.76 — Span 9

(Top & Bottom) See Transverse Section for location

N.B. T.G.L. and sta. line ℄

S.B. T.G.L. and sta. line

Sta. 227 + 54.32 -- Span 7
Sta. 228 + 78.32 — Span 8
Sta. 230 + 02.32 — Span 9

84 Bars - #555L1

17'-10" | 37'-2" | 17'-10"

390 Bars - #555T2 @ 3¾" Ctr's (Bottom)

390 Bars - #555T3 @ 3¾" Ctr's (Top)

Sta. 227 + 26.76 — Span 7
Sta. 228 + 50.76 — Span 8
Sta. 229 + 74.76 — Span 9

Sta. 228 + 78.32 — Span 7
Sta. 230 + 02.32 — Span 8
Sta. 231 + 26.32 — Span 9

8° 43'-42" Skew

Edge of Slab

℄ of Pier

9" | 8⅞" | Location of Scupper

Edge of slab, pay line Item 18MA | 122'-6" c. to c bearings

SLAB REINFORCEMENT PLAN, SPANS 7, 8 AND 9
Scale: 3/16" = 1'-0"

Note
Transverse reinforcement shall be placed parallel to skew.

6 Bars - #55CL5 | 6 Bars - #55CL5 | 6 Bars - #55CL5

1'-3" min. lap (Typical)

124 Bars - #555S4 @ 1'-0" Ctr's

PARAPET REINFORCEMENT PLAN
Not to Scale

PROJECT ENGINEER K. FASKER
IN CHARGE OF W. G. SHERMAN
DESIGNED BY C. Kaus
DESIGN CHECKED BY L. Tepper
DETAILED BY G. Sivunenko
DETAIL CHECKED BY [illegible]

BRIDGE NO. 2
INTERSTATE ROUTE 481 OVER DEWITT YARDS

SPANS 7, 8 & 9

DRAWING NO. 23 OF 30

F.I.S.H. 70-7

FED. RD. REG. NO.	STATE	FEDERAL AID PROJECT NO.	SHEET NO.	TOTAL SHEETS
I	NEW YORK	I-580-3(28) I-481-2(116)	202	309

INTERSTATE ROUTE CONSTRUCTION 970
INTERCHANGE (FORM 2)
ONONDAGA COUNTY

TABLE OF STATIONS				
SPAN	STA. A	STA. B	STA. C	STA. D
7	226+02.76	227+54.32	227+26.76	228+78.32
8	227+26.16	228.78.32	228+50.76	230+02.32
9	228+50.76	230.02.32	229+74.76	231+26.32

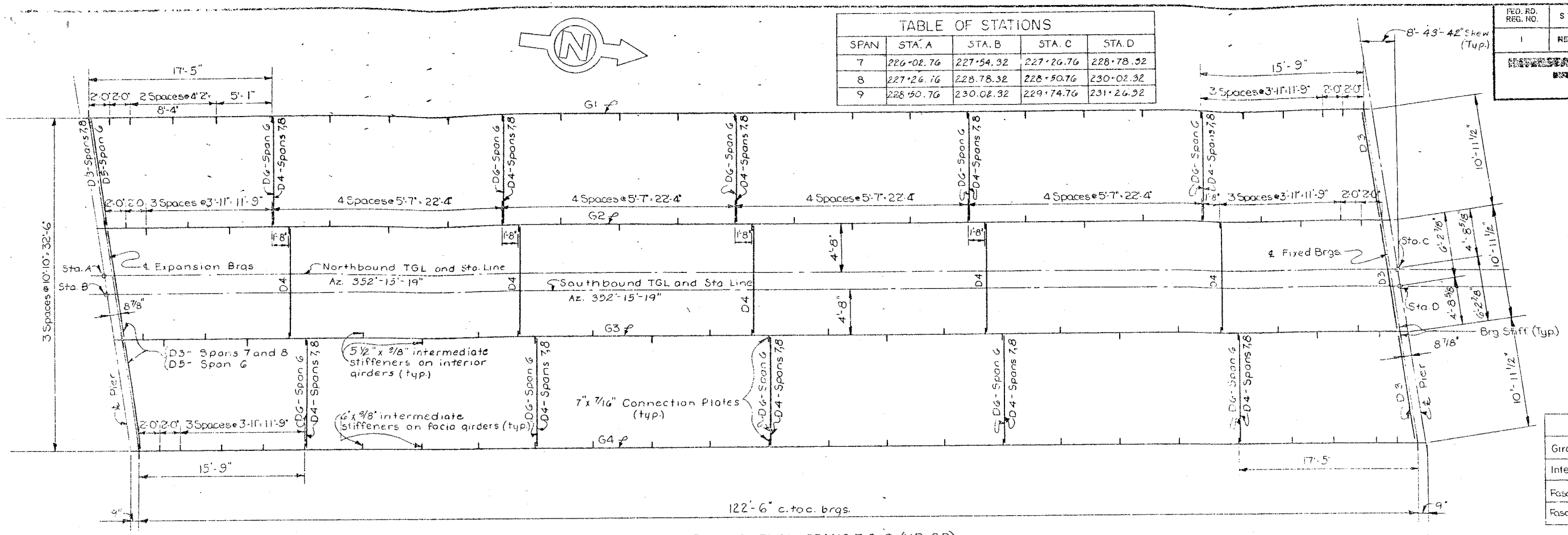

STEEL FRAMING PLAN SPANS 7, 8 & 9 (NB & SB)
Scale: 3/16" = 1'-0"

BEARING STIFFENER SIZES	
Girder	Size of each plate (2 plates @ each end of girder)
Interior spans 7,8 & 9	8" X 3/4".
Fascia span 7	8" X 3/4"
Fascia spans 8 & 9	9" X 7/8"

Steel in the girder webs and flanges shall be A.S.T.M. Designation A441 steel.
Steel in the stiffeners and diaphragms shall be A.S.T.M. Designation A36 steel.

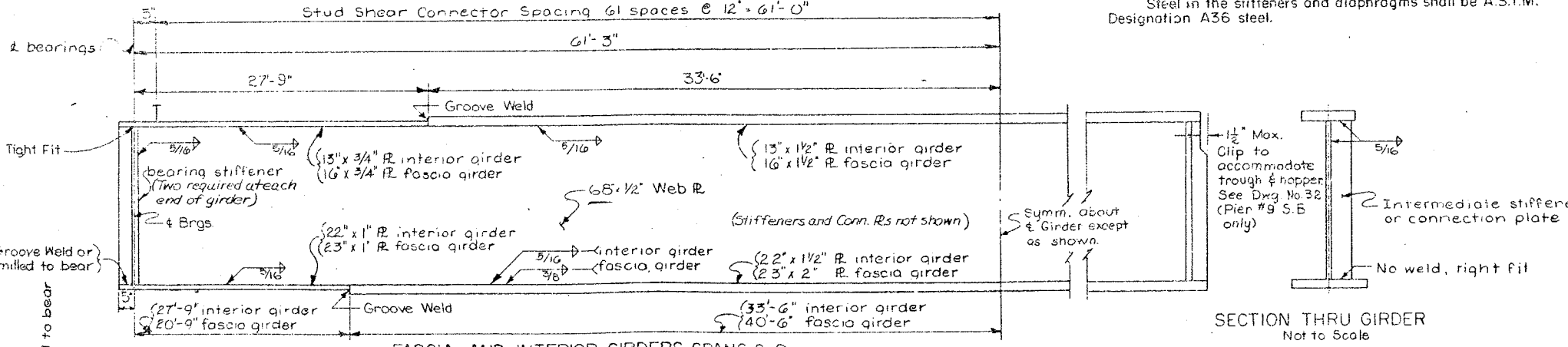

SECTION THRU GIRDER
Not to Scale

FASCIA AND INTERIOR GIRDERS SPANS 8 & 9
INTERIOR GIRDERS--SPAN 7
Not to Scale

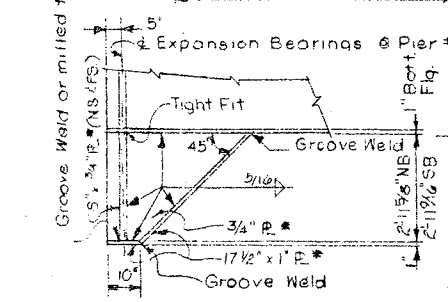

DETAIL AT SOUTH END OF INTERIOR STRINGERS--SPAN 7
Scale 3/8" = 1'-0"
* 441 Steel

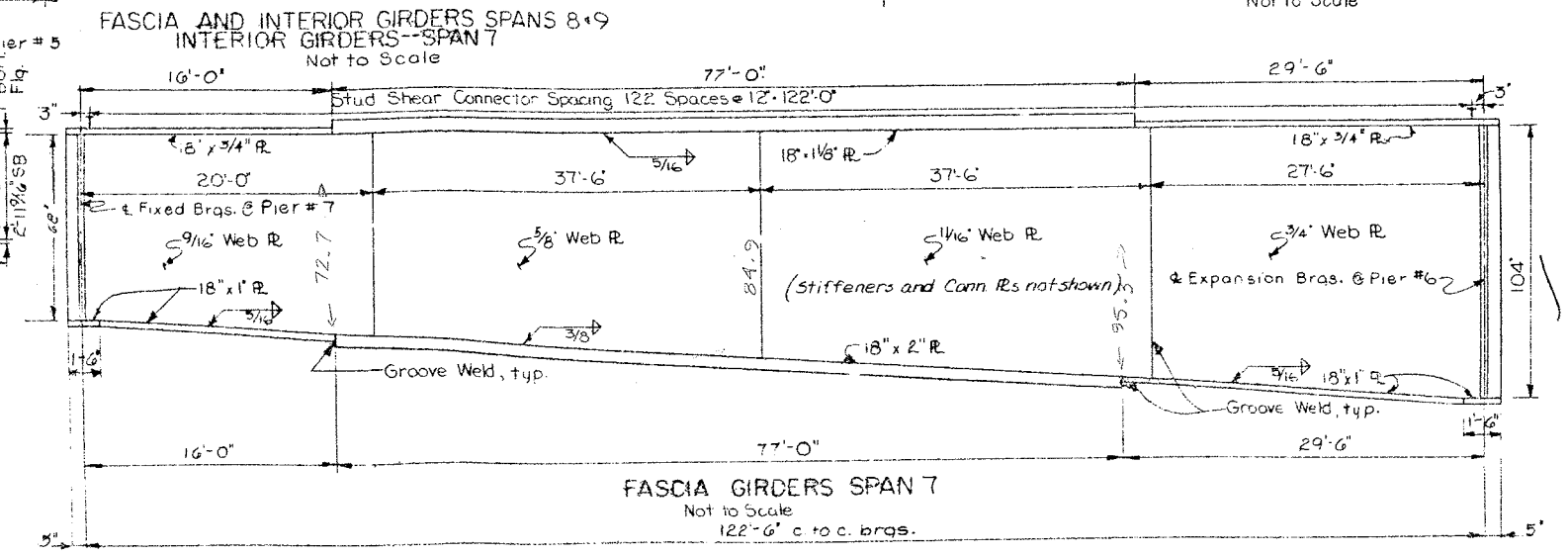

FASCIA GIRDERS SPAN 7
Not to Scale
122'-6" c. to c. brgs.

BOTTOM OF SLAB ELEVATIONS										
NORTHBOUND						SOUTHBOUND				
GIRDER	SPAN	℄ EXP BRGS	℄ SPAN	℄ FIX BRGS.		GIRDER	SPAN	℄ EXP BRGS.	℄ SPAN	℄ FIX BRGS.
G1	7	448.60	447.95	447.22		G1	7	448.70	448.07	447.35
G2	7	448.61	448.16	447.42		G2	7	448.91	448.28	447.56
G3	7	448.77	448.11	447.37		G3	7	448.93	448.29	447.57
G4	7	448.52	447.87	447.12		G4	7	448.68	448.05	447.32
G1	8	447.20	446.37	445.45		G1	8	447.33	446.52	445.63
G2	8	447.40	446.57	445.65		G2	8	447.54	446.73	445.83
G3	8	447.35	446.52	445.59		G3	8	447.55	446.73	445.83
G4	8	447.10	446.27	445.34		G4	8	447.30	446.48	445.58
G1	9	445.43	444.42	443.33		G1	9	445.60	444.61	443.67
G2	9	445.63	444.62	443.58		G2	9	445.80	444.81	443.74
G3	9	445.57	444.56	443.46		G3	9	445.81	444.81	443.73
G4	9	445.32	444.30	443.20		G4	9	445.56	444.56	443.48

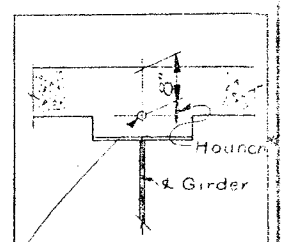

Bottom of Slab Elevations shown in table are computed for this point.

*Height of Haunch varies See Table of Haunch Heights on Drawing No. 34

		DEFLECTIONS				CAMBER		
	GIRDER	SPAN	STEEL (FT.)	SLAB (FT.)	SDL. (FT.)	TOTAL (FT.)	VCC (FT.)	TOTAL (FT.) (IN.)
NB AND SB	G1	7	.05	.09	.06	.20	.04	.24 (2 7/8)
	G2	7	.08	.24	.03	.35	.04	.31 (3 3/4)
	G3	7	.08	.24	.03	.35	.04	.39 (4 5/8)
	G4	7	.05	.09	.06	.20	.04	.24 (2 7/8)
	G1	8	.07	.12	.08	.27	.04	.31 (3 3/4)
	G2	8	.08	.24	.03	.35	.04	.39 (4 5/8)
	G3	8	.08	.24	.03	.35	.04	.39 (4 5/8)
	G4	8	.07	.12	.08	.27	.04	.31 (3 3/4)
SB	G1	9	.07	.12	.08	.27	.02	.29 (3 1/2)
	G2	9	.08	.24	.03	.35	.03	.38 (4 1/2)
	G3	9	.08	.24	.03	.35	.04	.39 (4 5/8)
	G4	9	.07	.12	.08	.27	.04	.31 (3 3/4)
NB	G1	9	.07	.12	.08	.27	-.06	.21 (2 1/2)
	G2	9	.08	.24	.03	.35	.01	.36 (4 3/8)
	G3	9	.08	.24	.03	.35	.04	.39 (4 5/8)
	G4	9	.07	.12	.08	.27	.04	.31 (3 3/4)

V.C.C. = Vertical Curve Camber
S.D.L. = Superimposed dead load, includes the weight of sidewalk & railing.

PROJECT ENGINEER R. L. Parker
IN CHARGE OF J. B. Sherman
DESIGNED BY [illegible]
DESIGN CHECKED BY [illegible]
DETAILED BY J. F. Darcy & N. L. Gallup
DETAIL CHECKED BY [illegible]

BRIDGE NO. 2
INTERSTATE ROUTE 481 OVER DEWITT YARDS
SPANS 7, 8 & 9 (NB & SB)
2939
DRAWING NO. 24 OF 56

F.I.S.H. 70-7

FED. RD. REG. NO.	STATE	FEDERAL AID PROJECT NO.	SHEET NO.	TOTAL SHEETS
1	NEW YORK	I-690-3(28) I-481-2(116)	203	309

INTERSTATE ROUTE CONNECTION 570
BUTTERNUT INTERCHANGE (STAGE 2)
ONONDAGA COUNTY

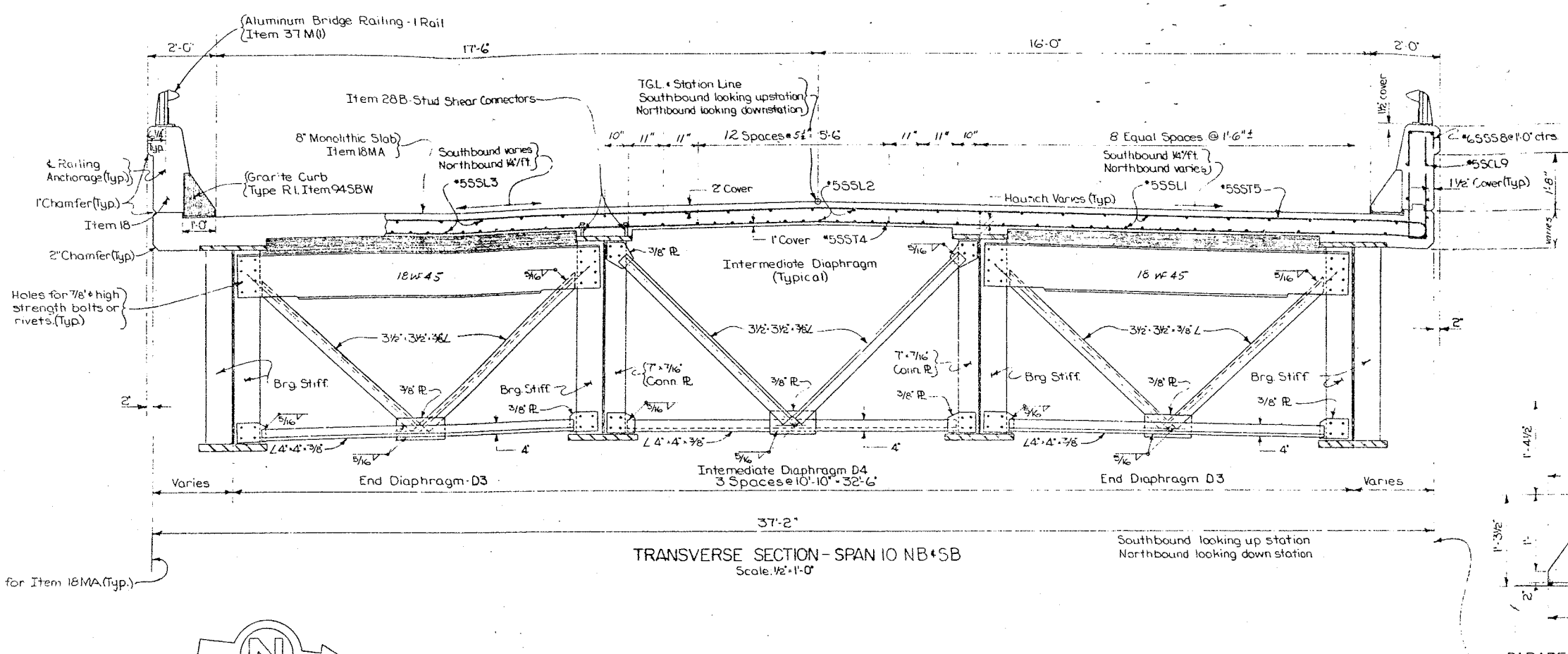

Notes: Holes for 7/8" ϕ rivets or high strength bolts may be omitted and welding substituted if the Contractor so elects. When the Contractor elects to substitute the welded connection for the bolted connection shown, the amount of welding used shall be equivalent in strength to the bolts removed.
For details of railing see Dwg No. 36 .

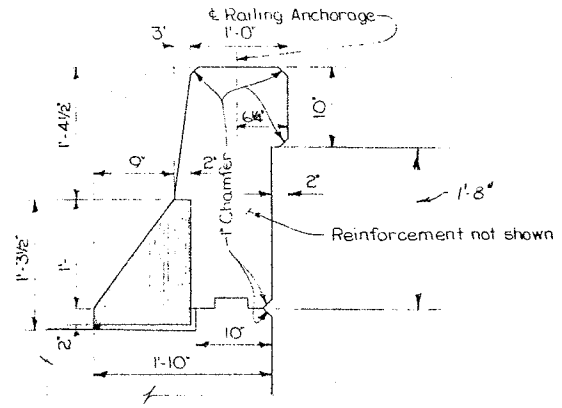

PARAPET SECTION
Scale: 1" = 1'-0"

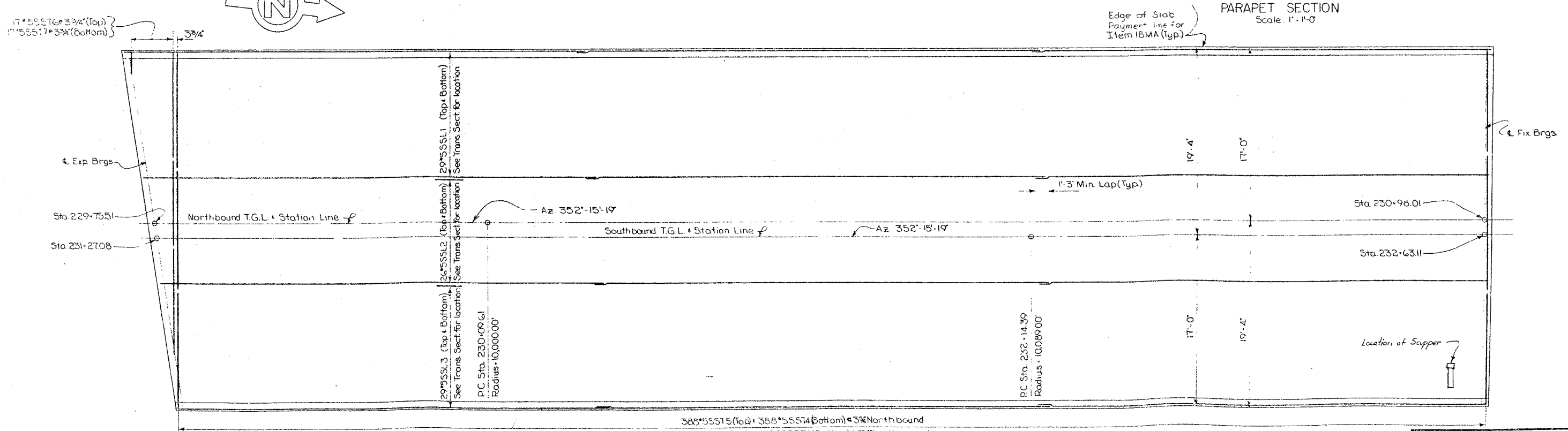

SLAB REINFORCEMENT PLAN - SPAN 10 NB ℄ SB
Scale: 3/16" = 1'-0"

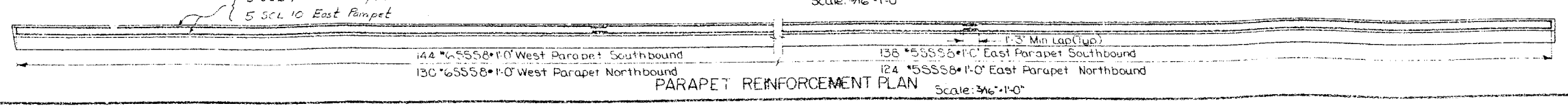

PARAPET REINFORCEMENT PLAN
Scale: 3/16" = 1'-0"

PROJECT ENGINEER E. L. Packer
IN CHARGE OF F. Eckel
DESIGNED BY E. Pawar
DESIGN CHECKED BY N. Tsipsis
DETAILED BY J. F. Darcy
DETAIL CHECKED BY [illegible]

BRIDGE NO. 2
INTERSTATE ROUTE 481 OVER DEWITT YARDS

SPAN 10 NB ℄ SB

DRAWING NO. 25 OF [illegible]

F.I.S.H. 70-7

FED. RD. REG. NO.	STATE	FEDERAL AID PROJECT NO.	SHEET NO.	TOTAL SHEETS
I	NEW YORK	I-690-3(28) I-481-2(16)	204	509

INTERSTATE ROUTE CONNECTION 690
BUTTERNUT (JUNCTION) (PHASE 2)
ONONDAGA COUNTY

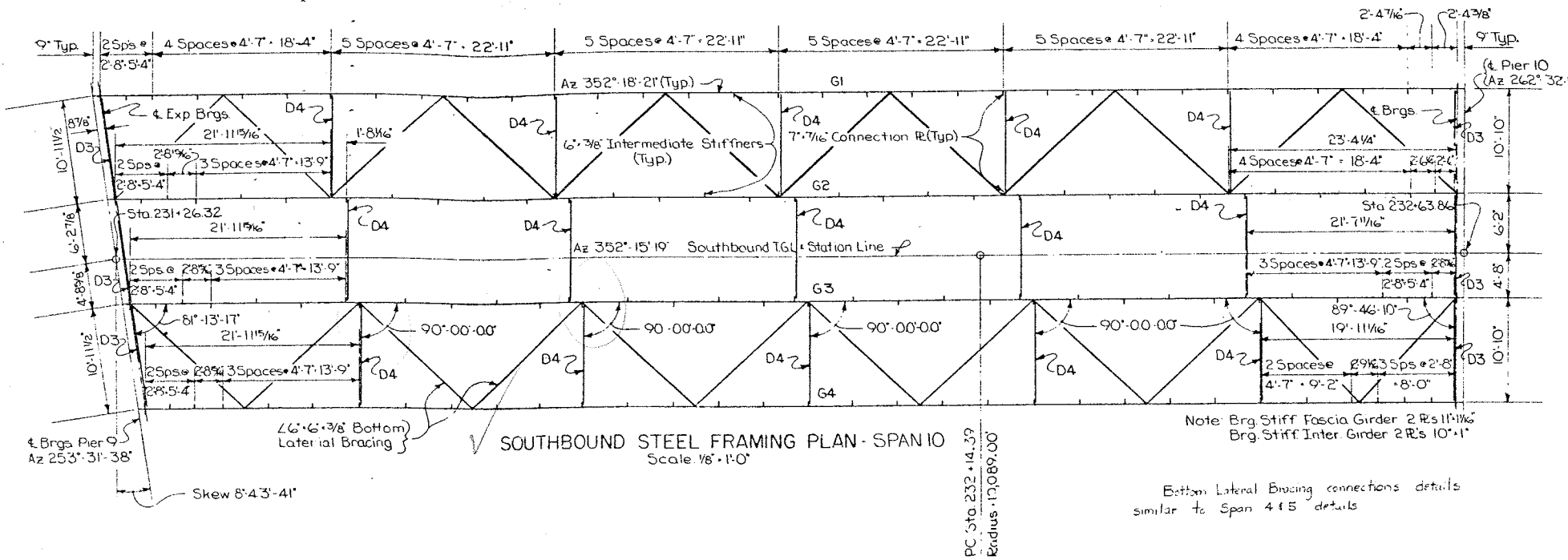

SOUTHBOUND STEEL FRAMING PLAN - SPAN 10
Scale 1/8" = 1'-0"

Note: Brg. Stiff Fascia Girder 2 Pl's 11" x 1 1/16"
Brg. Stiff Inter. Girder 2 Pl's 10" x 1"

Bottom Lateral Bracing connections details similar to Span 4 & 5 details

BOTTOM OF SLAB ELEVATIONS

SOUTHBOUND

GIRDER	SPAN	℄ EXP BRGS.	℄ SPAN	℄ FIX BRGS
G1	10	443.54	442.46	441.26
G2	10	443.72	442.49	441.15
G3	10	443.70	442.40	440.99
G4	10	443.45	442.16	440.77

NORTHBOUND

GIRDER	SPAN	℄ EXP. BRGS.	℄ SPAN	℄ FIX. BRGS.
G1	10	443.50	442.49	441.39
G2	10	443.56	442.42	441.19
G3	10	443.43	442.24	440.98
G4	10	443.17	442.00	440.75

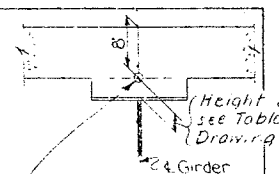

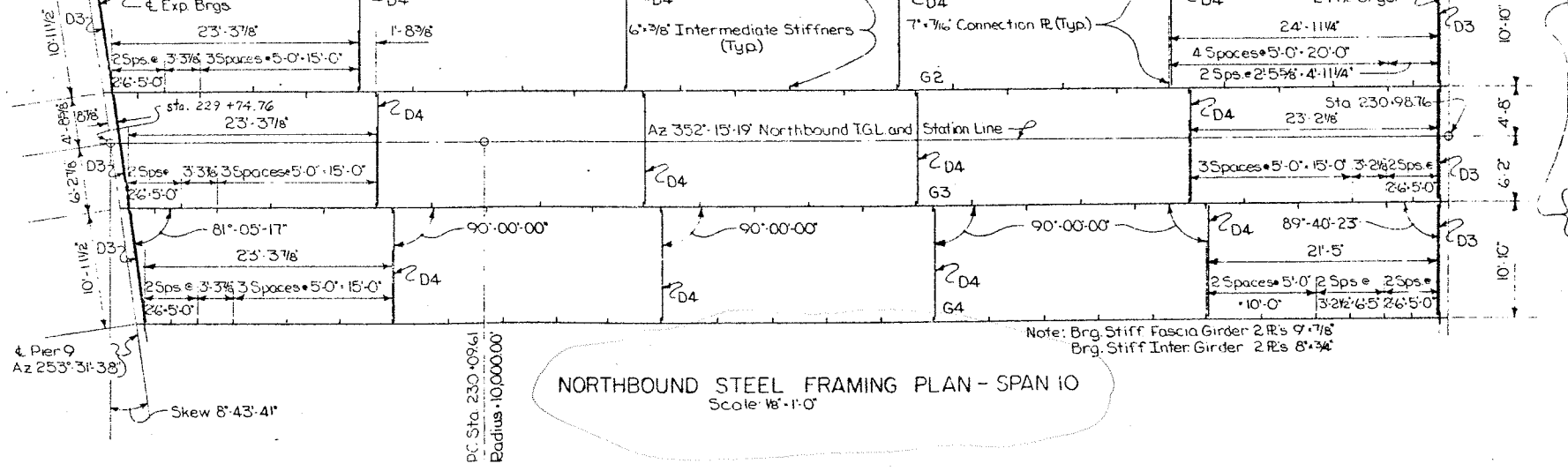

NORTHBOUND STEEL FRAMING PLAN - SPAN 10
Scale 1/8" = 1'-0"

Note: Brg. Stiff Fascia Girder 2 Pl's 9" x 7/16"
Brg. Stiff Inter. Girder 2 Pl's 8" x 3/4"

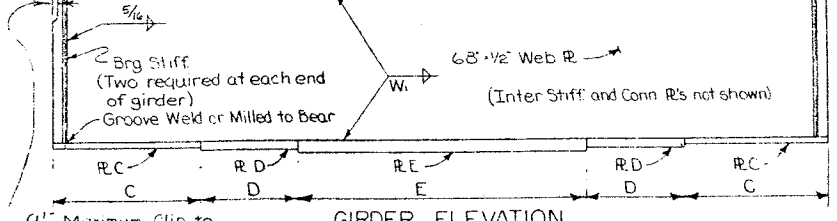

GIRDER ELEVATION
Not to Scale

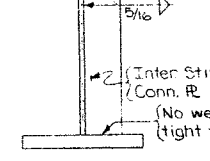

TYPICAL SECTION
Not to Scale

Notes: Flanges, webs, and gusset plates for bottom lateral bracing shall be A.S.T.M. Designation A441 Steel.
Diaphragms, stiffeners, bearings, and bottom lateral bracing (except gusset plates) shall be A.S.T.M. Designation A36 Steel.

WELD SIZE TABLE

Thickness of Flange	W1 Size of fillet weld joining web to flange
1 1/2" and under	5/16"
over 1 1/2" to 2 1/4"	3/8"
over 2 1/4"	1/2"

SPAN 10 GIRDER TABLE

	GIRDER	SPAN LENGTH ℄ TO ℄ BRGS.	FLANGE PLATE SIZES R A	R B	R C	R D	R E	FLANGE PLATE LENGTHS A	B	C	D	E	DEFLECTIONS (FT) STEEL	CONC.	S.D.L.	TOTAL	CAMBER V.C.C.(FT.)	CAMBER TOTAL (INCHES)		STUD SHEAR CONNECTOR SPACING
Northbound Southbound	G1	138'-8 15/16"	23" x 1"	23" x 1 1/2"	24" x 1"	24" x 2"	24" x 2 1/2"	36'-9 7/16"	66'-0"	20'-3 7/16"	19'-0"	61'-0"	0.10	0.15	0.11	0.36	.06	0.42'	5"	138 Spaces @ 12" = 138'-0"
	G2	137'-0 3/16"	19" x 7/8"	19" x 1 1/2"	24" x 1"	None	24" x 2"	32'-11 9/16"	72'-0"	23'-5 9/16"	0	91'-0"	0.11	0.28	0.04	0.43	.06	0.49	5 7/8"	137 Spaces @ 12" = 137'-0"
	G3	135'-3 5/8"	19" x 7/8"	19" x 1 1/2"	24" x 1"	None	24" x 2"	32'-0 9/16"	72'-0"	22'-6 9/16"	0	91'-0"	0.10	0.27	0.04	0.41	.05	0.46	5 1/2"	135 Spaces @ 12" = 135'-0"
	G4	133'-7"	23" x 1"	23" x 1 1/2"	24" x 1"	24" x 2"	24" x 2 1/2"	34'-2 1/8"	66'-0"	17'-8 1/2"	19'-0"	61'-0"	0.09	0.13	0.09	0.31	.05	0.36	4 3/8"	133 Spaces @ 12" = 133'-0"
	G1	125'-0 1/4"	17" x 3/4"	17" x 1 1/2"	24" x 1"	None	24" x 2"	28'-11 1/8"	68'-0"	21'-5 1/16"	0	83'-0"	0.07	0.12	0.09	0.28	.05	0.33	4"	125 Spaces @ 12" = 125'-0"
	G2	123'-3 1/8"	14" x 3/4"	14" x 1 1/2"	23" x 1"	None	23" x 1 1/2"	27'-6 7/16"	69'-0"	28'-0 9/16"	0	68'-0"	0.08	0.24	0.03	0.35	.05	0.40	4 3/4"	123 Spaces @ 12" = 123'-0"
	G3	121'-6"	14" x 3/4"	14" x 1 1/2"	23" x 1"	None	23" x 1 1/2"	26'-8"	69'-0"	27'-2"	0	68'-0"	0.07	0.23	0.03	0.33	.04	0.37	4 1/2"	121 Spaces @ 12" = 121'-0"
	G4	119'-8 7/8"	17" x 3/4"	17" x 1 1/2"	24" x 1"	None	24" x 2"	26'-3 7/16"	68'-0"	18'-9 7/16"	0	83'-0"	0.06	0.10	0.08	0.24	.04	0.28	3 3/8"	119 Spaces @ 12" = 119'-0"

G4 33.54 17.25
G1 28.51 21.01
G2 27.13 27.63
G3 26.25 26.75
G4 25.8698 18.3698

S.D.L. = superimposed dead load, includes weight of railing and parapet.
V.C.C. = vertical curve correction

PROJECT ENGINEER B. L. Parker
IN CHARGE OF F. Eckel
DESIGNED BY C. Rowe
DESIGN CHECKED BY Toepser & Smith
DETAILED BY J. F. Darcy
DETAIL CHECKED BY [illegible]

BRIDGE NO. 2
INTERSTATE ROUTE 481 OVER DEWITT YARDS

SPAN 10 NB & SB

DRAWING NO. 26 OF 50

F.I.S.H. 70-7

FED. RD. REG. NO.	STATE	FEDERAL AID PROJECT NO.	SHEET NO.	TOTAL SHEETS
1	NEW YORK	1-[illegible] 1-[illegible]	205	309

INTERSTATE ROUTE CONNECTION 570
BUTTERNUT INTERCHANGE (PHASE 2)
ONONDAGA COUNTY

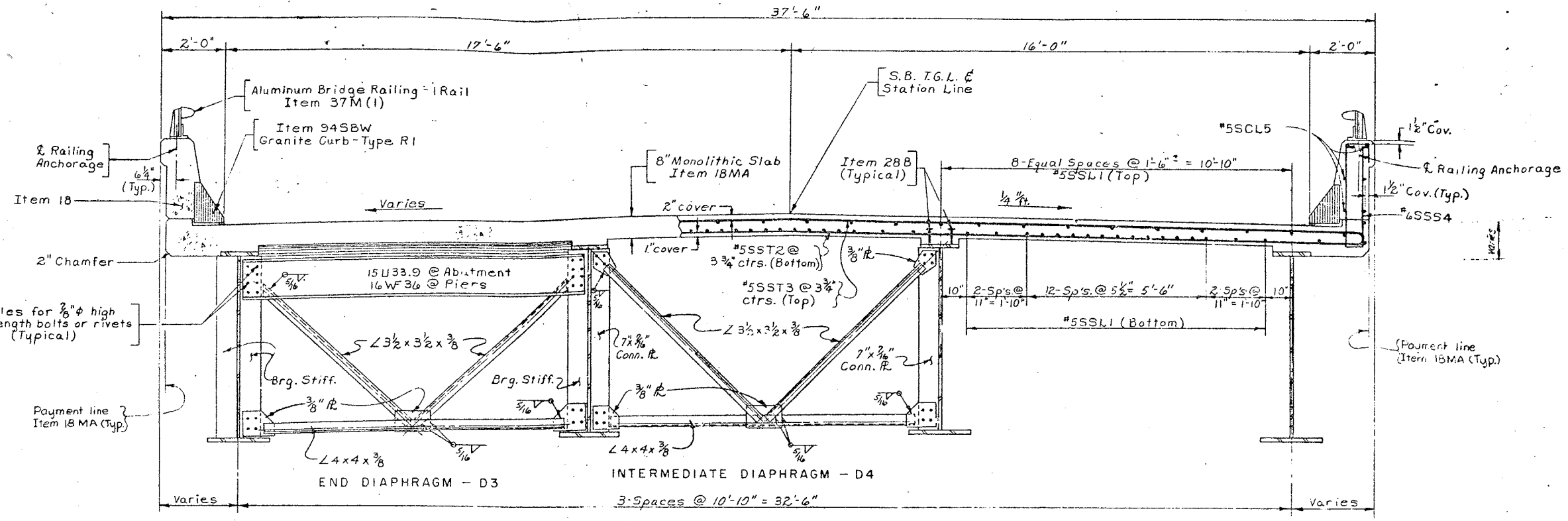

TRANSVERSE SECTION SOUTHBOUND SPANS 11,12,13,14 & 15
Scale: ½" = 1'-0"

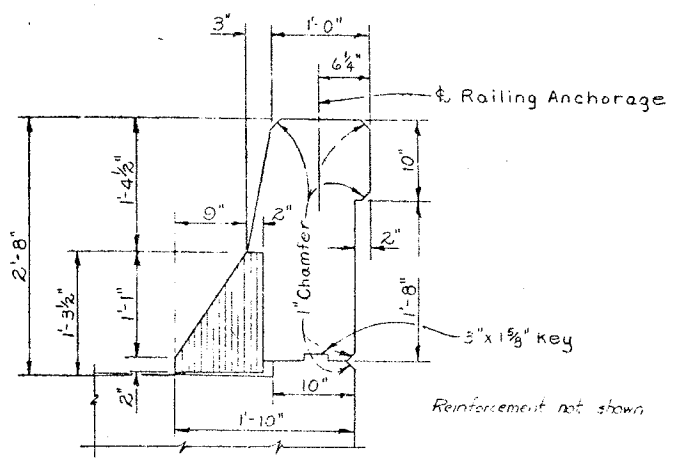

PARAPET DETAIL
Scale: 1" = 1'-0"

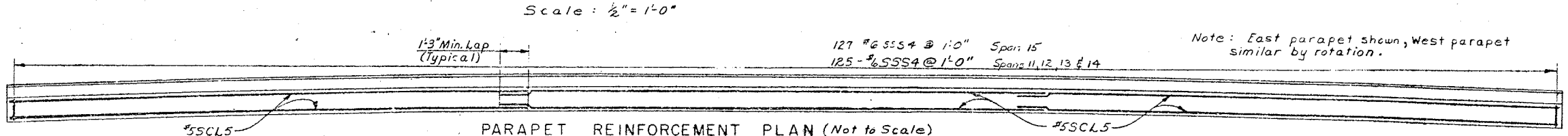

PARAPET REINFORCEMENT PLAN (Not to Scale)

Note: East parapet shown, West parapet similar by rotation.

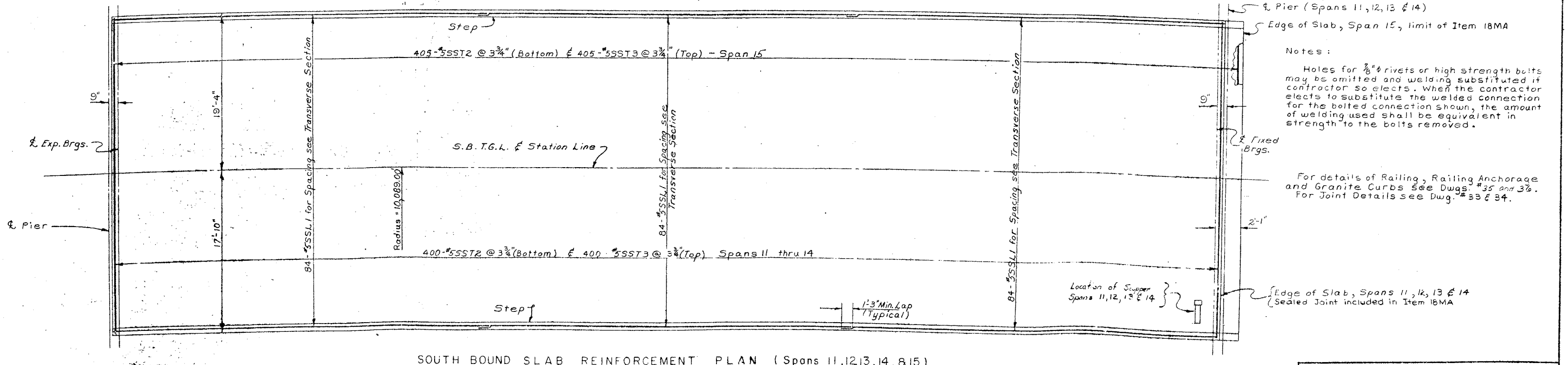

Notes:

Holes for ⅞"φ rivets or high strength bolts may be omitted and welding substituted if contractor so elects. When the contractor elects to substitute the welded connection for the bolted connection shown, the amount of welding used shall be equivalent in strength to the bolts removed.

For details of Railing, Railing Anchorage and Granite Curbs see Dwgs. #35 and 36. For Joint Details see Dwg. #33 & 34.

SOUTH BOUND SLAB REINFORCEMENT PLAN (Spans 11, 12, 13, 14, & 15)
Scale: 3/16" = 1'-0"

PROJECT ENGINEER R. Parker
IN CHARGE OF J. B. Sherman
DESIGNED BY D. H. Smith
DESIGN CHECKED BY S. Rowe
DETAILED BY J. C. Thompson
DETAIL CHECKED BY [illegible]

BRIDGE NO. 2
INTERSTATE ROUTE 481 OVER DEWITT YARDS

SPANS 11 THRU 15 SOUTHBOUND

DRAWING NO. 27 OF 5[illegible]

FED. RD. REG. NO.	STATE	FEDERAL AID PROJECT NO.	SHEET NO	TOTAL SHEETS
I	NEW YORK	I-690-3(28) I-481-2(118)	206	309

INTERSTATE ROUTE CONNECTION STS
DEWITT RECREATION (TYPE X)
ONONDAGA COUNTY

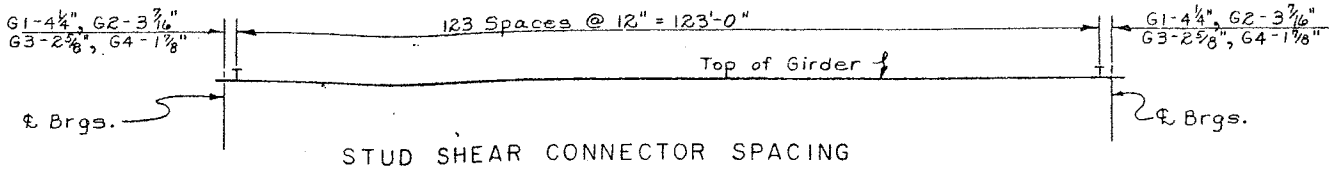

STUD SHEAR CONNECTOR SPACING
Not to Scale

TABLE OF STATIONS

SPAN	STATION "A"	℄	STATION "B"	℄	STATION "C"	℄
	STATION		STATION		STATION	
11 S.B.	232+63.86	℄ Pier #9 S.B.	233+88.86	℄ Pier #10 S.B.	—	—
12 S.B.	233+88.86	℄ Pier #10 S.B.	235+13.86	℄ Pier #11 S.B.	—	—
13 S.B.	235+13.86	℄ Pier #11 S.B.	236+38.86	℄ Pier #12 S.B.	—	—
14 S.B.	236+38.86	℄ Pier #12 S.B.	237+63.86	℄ Pier #13 S.B.	—	—
15 S.B.	237+63.86	℄ Pier #13 S.B.	—	—	238+88.11	℄ Fixed Brgs No. Abut. (S.B.)

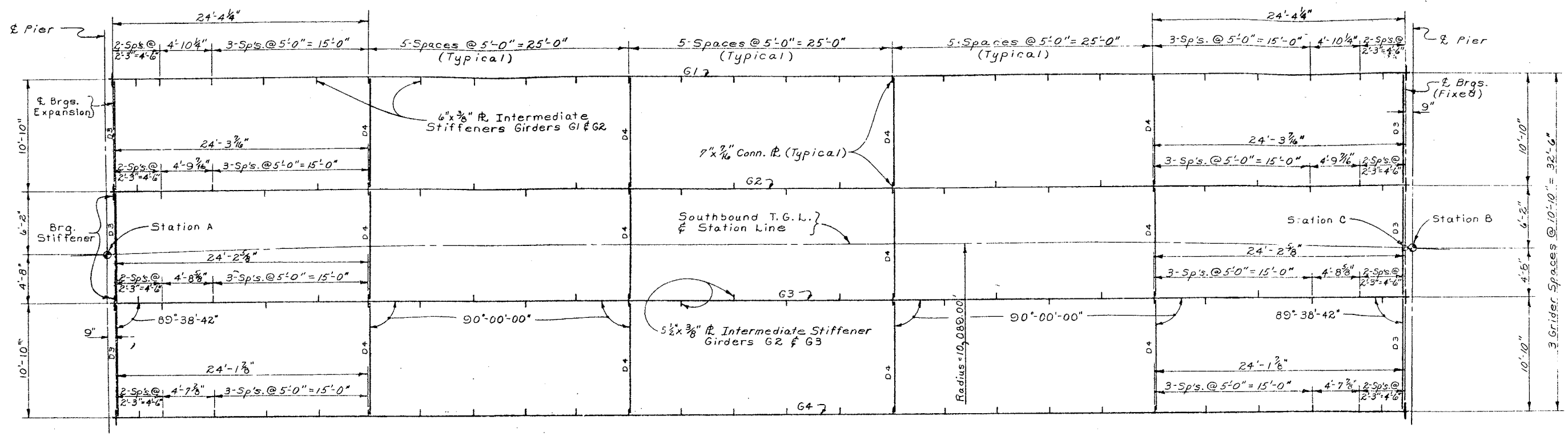

Note:
See Transverse Section for Diaphragms.

STEEL FRAMING PLAN (SPANS 11, 12, 13, 14 & 15 SOUTHBOUND)
Scale : 3/16" = 1'-0"

Notes:

Web and flanges shall be A.S.T.M. designation A441 Steel.

Stiffeners, connection plates, and diaphragms shall be A.S.T.M. designation A36 Steel.

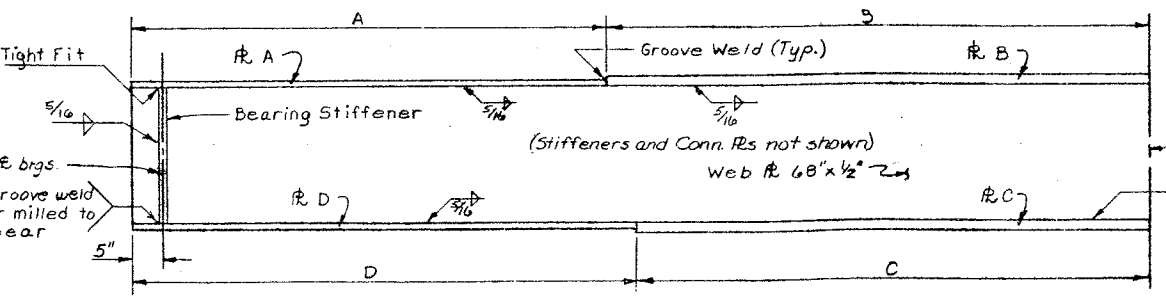

GIRDER ELEVATION
Not to Scale

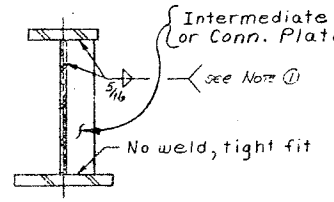

TYPICAL SECTION
Not to Scale

Note ①: Where connection plates are used in pairs, the fillet weld at top of stiffener is optional. See Note "Sup 4" in the Superstructure Notes.

SOUTHBOUND GIRDER TABLE — SPANS 11 thru 15

GIRDER	SPAN C. to C. BRGS.	FLANGE SIZES ℄ A	℄ B	℄ C	℄ D	FLANGE DIMENSIONS A	B	C	D	Brg. Stiffener 2-℄s. required each end of Girder	Intermediate Stiffener Size
G1	123'-8½"	16"x¾"	16"x1⅛"	23"x2"	23"x1"	28'-9¼"	33'-6"	40'-6"	21'-5¼"	9"x⅞"	6"x⅜"
G2	123'-6 15/16"	15"x¾"	13"x1½"	22"x1½"	22"x1"	28'-8 3/16"	33'-6"	33'-6"	28'-8 3/16"	8"x¾"	5½"x⅜"
G3	123'-5 5/16"	13"x¾"	13"x1½"	22"x1½"	22"x1"	28'-7⅝"	33'-6"	33'-6"	28'-7⅝"	8"x¾"	5½"x⅜"
G4	123'-3 11/16"	16"x¾"	16"x1½"	23"x2"	23"x1"	28'-6⅛"	33'-6"	40'-6"	21'-6⅞"	9"x⅞"	6"x⅜"

THEO. BOTTOM OF SLAB ELEV. (Southbound)

GIRDER	SPAN	℄ So. Brg.	℄ Span	℄ No. Brg.
G1	11	441.24	440.03	438.56
G2	11	441.12	439.30	438.33
G3	11	440.96	439.58	438.11
G4	11	440.74	439.35	437.88
G1	12	438.52	436.95	435.30
G2	12	438.29	436.73	435.07
G3	12	438.07	436.50	434.85
G4	12	437.84	436.27	434.62
G1	13	435.46	433.51	431.67
G2	13	435.03	433.28	431.45
G3	13	434.81	433.06	431.22
G4	13	434.58	432.83	431.00
G1	14	431.63	429.72	427.89
G2	14	431.40	429.49	427.66
G3	14	431.18	429.26	427.44
G4	14	430.95	429.04	427.21
G1	15	427.85	426.16	424.62
G2	15	427.62	425.93	424.39
G3	15	427.40	425.71	424.16
G4	15	427.17	425.48	423.94

TABLE OF AZIMUTHS

LOCATION	AZIMUTHS
℄ Pier #10 (S.B.)	262°-32'-11"
℄ Pier #11 (S.B.)	263°-14'-46"
℄ Pier #12 (S.B.)	263°-57'-22"
℄ Pier #13 (S.B.)	264°-39'-57"
℄ Pier #14 (S.B.)	265°-22'-33"
℄ Fixed Brgs. @ North Abut. (S.B.)	266°-05'-08"
℄ Girders, Span 11 (SB)	352°-53'-28"
℄ Girders, Span 12 (S.B.)	353°-36'-04"
℄ Girders, Span 13 (S.B.)	354°-18'-40"
℄ Girders, Span 14 (S.B.)	355°-01'-15"
℄ Girders, Span 15 (S.B.)	355°-43'-51"

SPAN	GIRDER	DEFLECTIONS (ft.) STEEL	SLAB	SDL	TOTAL	CAMBER VCC (ft.)	TOTAL (ft.)	TOTAL (in.)
Spans 11, 12 & 13 (S.B.)	G1 and G4	.07	.12	.08	.27	.04	.31	3¾
	G2 and G3	.08	.24	.03	.35	.04	.39	4⅝
Span 14 (S.B.)	G1 and G4	.07	.12	.08	.27	.05	.22	2⅝
	G2 and G3	.08	.24	.03	.35	-.05	.30	3⅝
Span 15 (S.B.)	G1 and G4	.07	.12	.08	.27	-.07	.20	2⅜
	G2 and G3	.08	.24	.03	.35	-.07	.28	3⅜

S.D.L. = Superimposed Dead Load (includes weight of parapet and railing.)

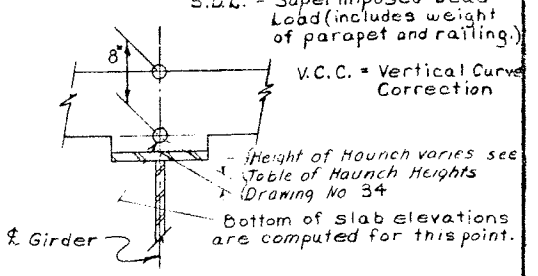

BRIDGE NO. 2
INTERSTATE ROUTE 481 OVER DEWITT YARDS

SPANS 11 THRU 15 SOUTHBOUND

DRAWING NO. 28 OF 50

PROJECT ENGINEER R. Parker
IN CHARGE OF J. B. Sherman
DESIGNED BY N. J. Toppses
DESIGN CHECKED BY S. Rowe
DETAILED BY J. C. Thompson
DETAIL CHECKED BY [illegible]

F.I.S.H. 70-7

FED. RD. REG. NO.	STATE	FEDERAL AID PROJECT NO.	SHEET NO.	TOTAL SHEETS
I	NEW YORK	I-690-3(28) I-481-2(1)22	207	309

INTERSTATE ROUTE CONNECTION 570
BUTTERNUT INTERCHANGE (PHASE 2)
ONONDAGA COUNTY

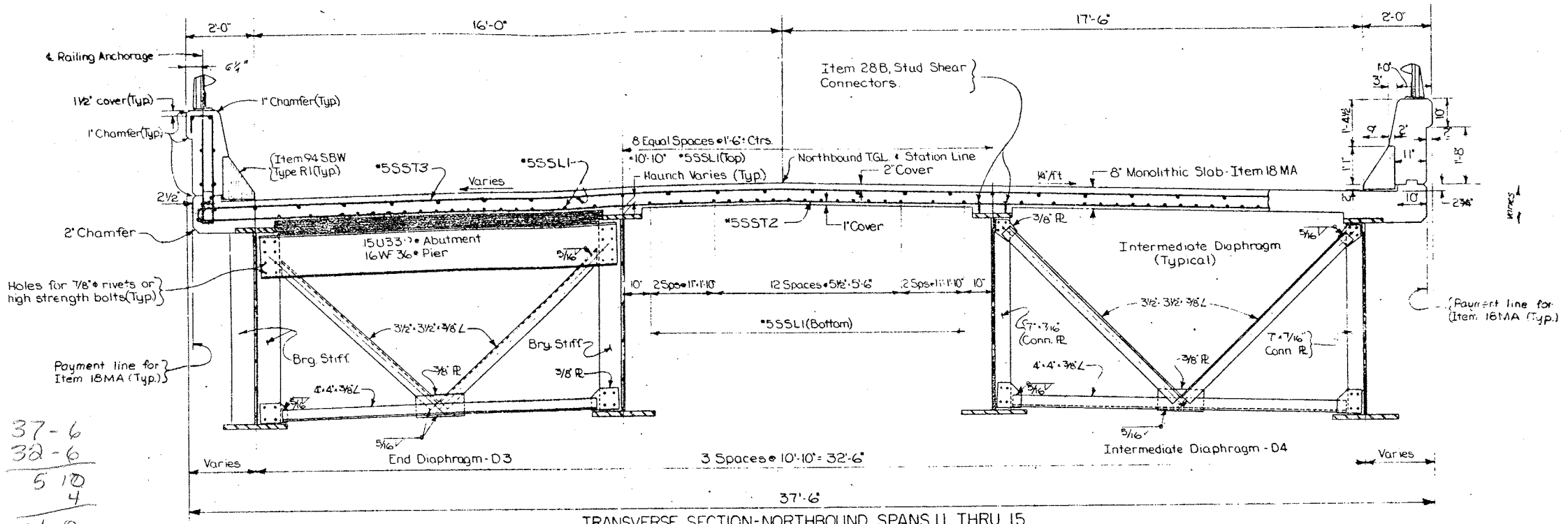

TRANSVERSE SECTION - NORTHBOUND SPANS 11 THRU 15
Scale ½" = 1'-0"

Notes:
Holes for 7/8" ø rivets or high strength bolts may be omitted and welding substituted if the contractor so elects. When the contractor elects to substitute the Welded Connection for the Bolted Connection shown, the amount of welding used shall be equivalent in strength to the bolts removed.

For details of Railing, Railing Anchorage, Granite Curbs and Joint Details, See Misc Detail Sheets.

37-6
32-6
5 10
4
4-8
2-4

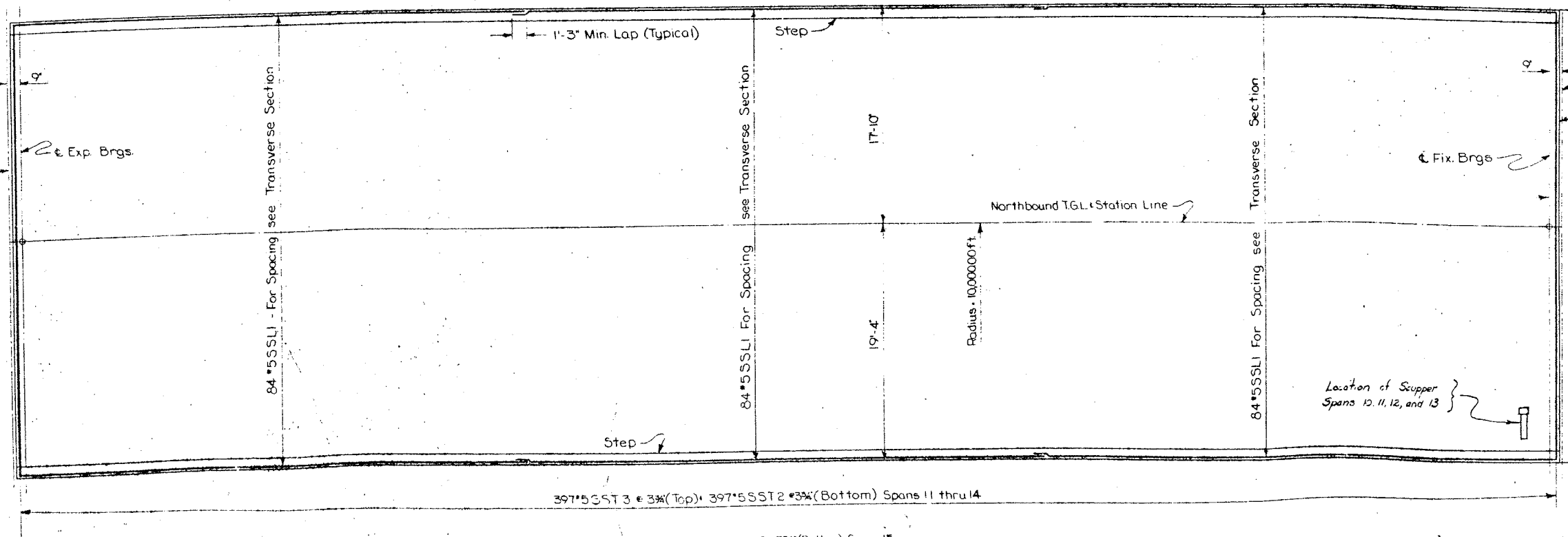

PARAPET REINFORCEMENT PLAN
Scale: 3/16" = 1'-0"

Note: West parapet shown
East parapet similar

SLAB REINFORCEMENT - SPANS 11 THRU 15 NORTHBOUND
Scale: 3/16" = 1'-0"

PROJECT ENGINEER R.L. Parker
IN CHARGE OF J.B. Sherman
DESIGNED BY N. Terpack
DESIGN CHECKED BY R. Smith
DETAILED BY J.F. Darcy
DETAIL CHECKED BY T.W. Fehl
CHECKED

BRIDGE NO. 2
INTERSTATE ROUTE 481 OVER DEWITT YARDS

SPANS 11 THRU 15 NORTHBOUND

DRAWING NO. 29 OF 50

F.I.S.H. 70-7

FED. RD. REG. NO.	STATE	FEDERAL AID PROJECT NO.	SHEET NO.	TOTAL SHEETS
I	NEW YORK	I-690-3(23) I-481-2(11)	208	308

INTERSTATE ROUTE CONNECTION 570
BUTTERNUT INTERCHANGE (PHASE 2)
ONONDAGA COUNTY

345-5584

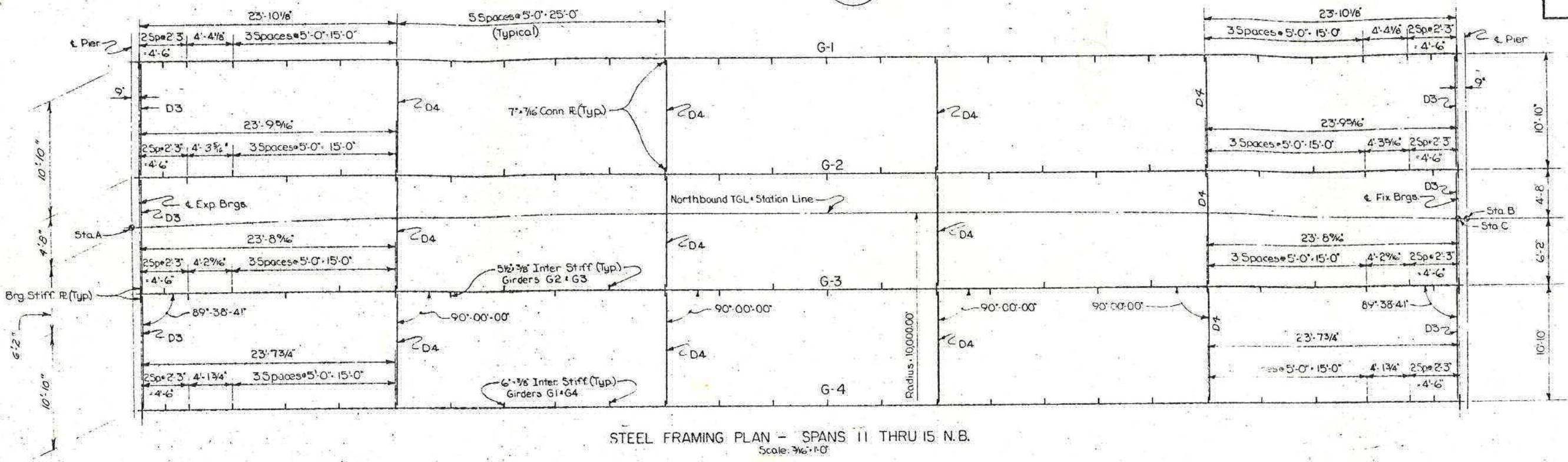

STEEL FRAMING PLAN – SPANS 11 THRU 15 N.B.
Scale: 3/16" = 1'-0"

TABLE OF AZIMUTHS	
LOCATION	AZIMUTH
℄ Pier #10 N.B.	262° 45' 57"
℄ Pier #11 N.B.	263° 28' 36"
℄ Pier #12 N.B.	264° 11' 13"
℄ Pier #13 N.B.	264° 53' 51"
℄ Pier #14 N.B.	265° 36' 28"
℄ Fixed Bearings @ North Abutment N.B.	266° 19' 06"
℄ girders, Span 11 N.B.	353° 07' 17"
℄ girders, Span 12 N.B.	353° 49' 55"
℄ girders, Span 13 N.B.	354° 32' 32"
℄ girders, Span 14 N.B.	355° 15' 10"
℄ girders, Span 15 N.B.	355° 57' 47"

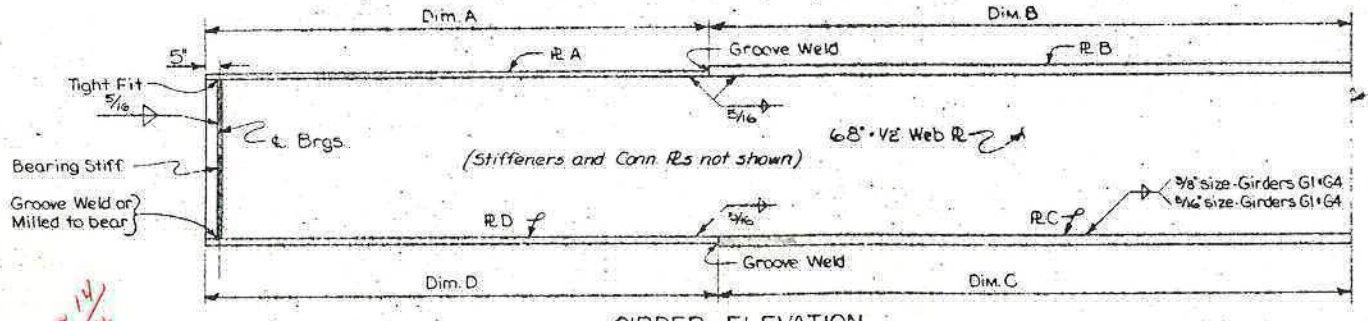

GIRDER ELEVATION
Not to Scale

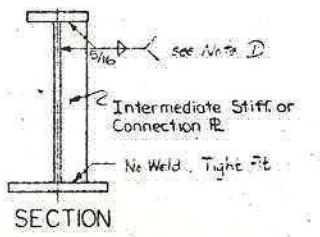

SECTION

Web and flanges shall be A.S.T.M. Designation A441 Steel. Stiffeners, connection plates and diaphragms shall be A.S.T.M. Designation A36 Steel.

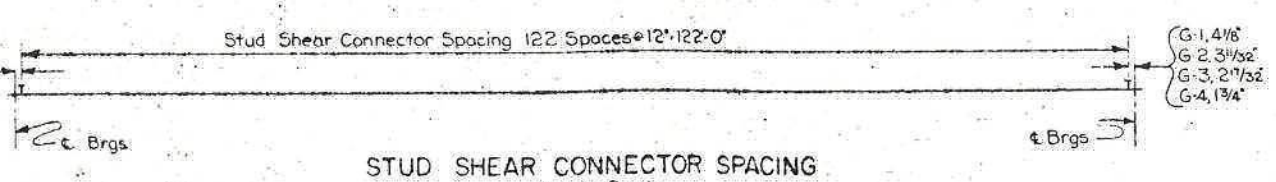

STUD SHEAR CONNECTOR SPACING
Not to Scale

Note ①: Where connection plates are used in pairs, the fillet weld at top of stiffener is optional. See Note "Sup 4." in the Superstructure Notes.

BOTTOM OF SLAB ELEVATIONS NORTHBOUND				
GIRDER	SPAN	℄ EXP BRGS	℄ SPAN	℄ FIX BRGS
G-1	11	441.36	440.02	438.57
G-2	11	441.16	439.80	438.34
G-3	11	440.94	439.57	438.12
G-4	11	440.72	439.34	437.89
G-1	12	438.53	436.98	435.34
G-2	12	438.30	436.75	435.12
G-3	12	438.08	436.52	434.89
G-4	12	437.85	436.30	434.66
G-1	13	435.30	433.57	431.75
G-2	13	435.07	433.34	431.53
G-3	13	434.85	433.12	431.30
G-4	13	434.62	432.89	431.08
G-1	14	431.71	429.80	427.98
G-2	14	431.48	429.57	427.75
G-3	14	431.26	429.34	427.53
G-4	14	431.03	429.12	427.30
G-1	15	427.93	426.25	424.71
G-2	15	427.71	426.02	424.48
G-3	15	427.48	425.80	424.26
G-4	15	427.26	425.57	424.03

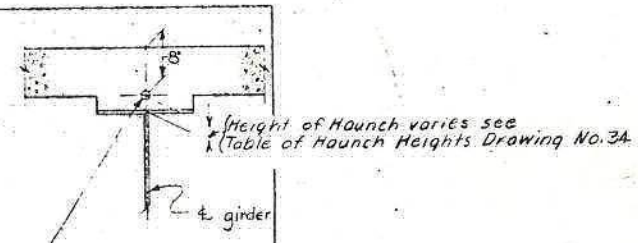

NORTHBOUND GIRDER TABLE – SPANS 10 THRU 14											
	SPAN LENGTH	FLANGE SIZE				FLANGE DIMENSIONS				BEARING STIFF. 2 PLs Required at each end of girder	INTERMEDIATE STIFFNER SIZE
RDER	℄ TO ℄ BEARINGS	PL A	PL B	PL C	PL D	Z0 A	B	C	D		
1	122'-8 5/16"	16" x ¾"	16" x 1 1/8"	23" x 2"	23" x 1"	23'-3⅛"	33'-6"	40'-6"	21'-3⅛"	9" x ⅞"	6" x ⅜"
2	122'-6 11/16"	13" x ¾"	13" x 1½"	22" x 1½"	22" x 1"	23'-2⅝"	33'-6"	33'-6"	23'-2⅝"	8" x ¾"	5½" x ⅜"
3	122'-5 1/16"	13" x ¾"	13" x 1½"	22" x 1½"	22" x 1"	23'-1⅛"	33'-6"	33'-6"	23'-1⅛"	8" x ¾"	5½" x ⅜"
4	122'-3 7/16"	16" x ¾"	16" x 1½"	23" x 2"	23" x 1"	23'-0¾"	33'-6"	40'-6"	21'-0¾"	9" x ⅞"	6" x ⅜"

DEFLECTIONS (FT.)						CAMBER		
SPAN	GIRDER	STEEL	SLAB	S.D.L.	TOTAL	V.C.C. (FT.)	TOTAL FT.	TOTAL IN.
Spans 11, 12 & 13 Northbound	G1 & G4	.07	.12	.08	.27	.04	3.1	37⅛
	G2 & G3	.08	.24	.03	.35	.04	3.9	47⅛
Span 14 Northbound	G1 & G4	.07	.12	.08	.27	-.04	2.3	27⅝
	G2 & G3	.08	.24	.03	.35	-.04	3.1	37⅛
Span 15 Northbound	G1 & G4	.07	.12	.08	.27	-.07	2.0	23⅞
	G2 & G3	.08	.24	.03	.35	-.07	2.8	33⅝

V.C.C. - Vertical Curve Camber
S.D.L. (Superimposed Dead Load): Includes weight of parapet & railing.

TABLE OF STATIONS						
SPAN	STATION A		STATION B		STATION C	
	STATION	℄	STATION	℄	STATION	℄
11 (NB)	230+98.76	℄ Pier #10 (NB)	232+22.76	℄ Pier #11 (NB)		
12 (NB)	232+22.76	℄ Pier #11 (NB)	233+46.76	℄ Pier #12 (NB)		
13 (NB)	233+46.76	℄ Pier #12 (NB)	234+70.76	℄ Pier #13 (NB)		
14 (NB)	234+70.76	℄ Pier #13 (NB)	235+94.76	℄ Pier #14 (NB)		
15 (NB)	235+94.76	℄ Pier #14 (NB)			237+18.01	℄ Fix Brgs N.A. (NB)

PROJECT ENGINEER R. L. Parker
IN CHARGE OF J. B. Sherman
DESIGNED BY J. Tapper
DESIGN CHECKED BY R. Smith
DETAILED BY J. F. Darcy
DETAIL CHECKED BY J. W. Eckel

BRIDGE NO. 2
INTERSTATE ROUTE 481 OVER DEWITT YARDS

SPANS 11 THRU 15 NORTHBOUND

DRAWING NO. 30 OF 50

F.I.S.H. 76-7

FED. NO. REG. NO.	STATE	FEDERAL AID PROJECT NO.	SHEET NO.	TOTAL SHEETS
I	NEW YORK	I-481-2(16)	209	309

INTERSTATE ROUTE CONNECTION 570
CUTTERMILL AVENUE AREA (PHASE 2)
ONONDAGA COUNTY

Note: Concrete Slab not shown.

PLAN (AT PIER # 3, 4 or 5)
Scale: 1"=1'-0"

Direction of North for Southbound Finger Plate Plan

Direction of North for Northbound Finger Plate Plan

SECTION B-B
Scale: 1"=1'-0"

	Dimension at 68° F	T
"A"	4 11/16"	5/32"
"B"	1 7/8"	5/32"

T is the decrease in the dimension for every 10° F rise in temperature (and the increase in the dimension for every 10°F fall in temperature)

* Note: These are plan dimensions and do not take into account the additional length needed due to the cross slope and profile of the roadway.

FINGER PLATE PLAN
Scale: 1"=1'-0"

SECTION X-X
No Scale

SECTION Y-Y
No Scale

FINGER DETAIL
Scale: 3"=1'-0"

SECTION A-A
Not to scale

DETAIL "A"
Scale: 3"=1'-0"

CONNECTION TO TROUGH
Full Scale

NOTES:
Finger R's shall follow slope and grade of roadway. All steel shall be Item 23 unless otherwise indicated.
The 1/2" finger plates, the 1/4" vertical side plates, and 1/4" bent deflector plates shall be corrosion resistant steel A.S.T.M. Designation A242.

PROJECT ENGINEER	R. Parker
IN CHARGE OF	V. Sherman
DESIGNED BY	N.A. Toppses
DESIGN CHECKED BY	F. Eckel
DETAILED BY	N.A. Toppses
DETAIL CHECKED BY	F. Eckel

BRIDGE NO. 2
INTERSTATE ROUTE 481 OVER DEWITT YARDS

FINGER JOINT AT PIERS 3,4+5

DRAWING NO. 31 OF 50

F.I.S.H. 70-7

FED. RD. REG. NO.	STATE	FEDERAL AID PROJECT NO.	SHEET NO.	TOTAL SHEETS
I	NEW YORK	I-690-3(23) I-481-2(116)	210	309

INTERSTATE ROUTE CONNECTION 570
BUTTERNUT INTERCHANGE (PHASE 2)
ONONDAGA COUNTY

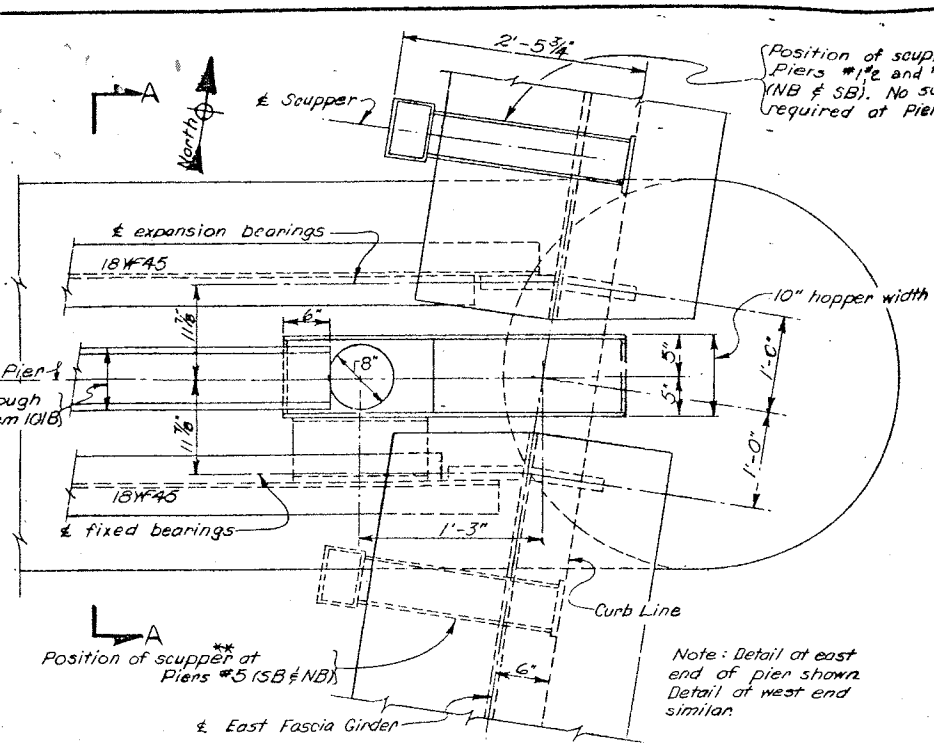

PLAN AT EAST END, PIERS 1,2,3,4 &5(NB & SB)
Scale : 1" = 1'-0"

Note : Detail at east end of pier shown. Detail at west end similar.

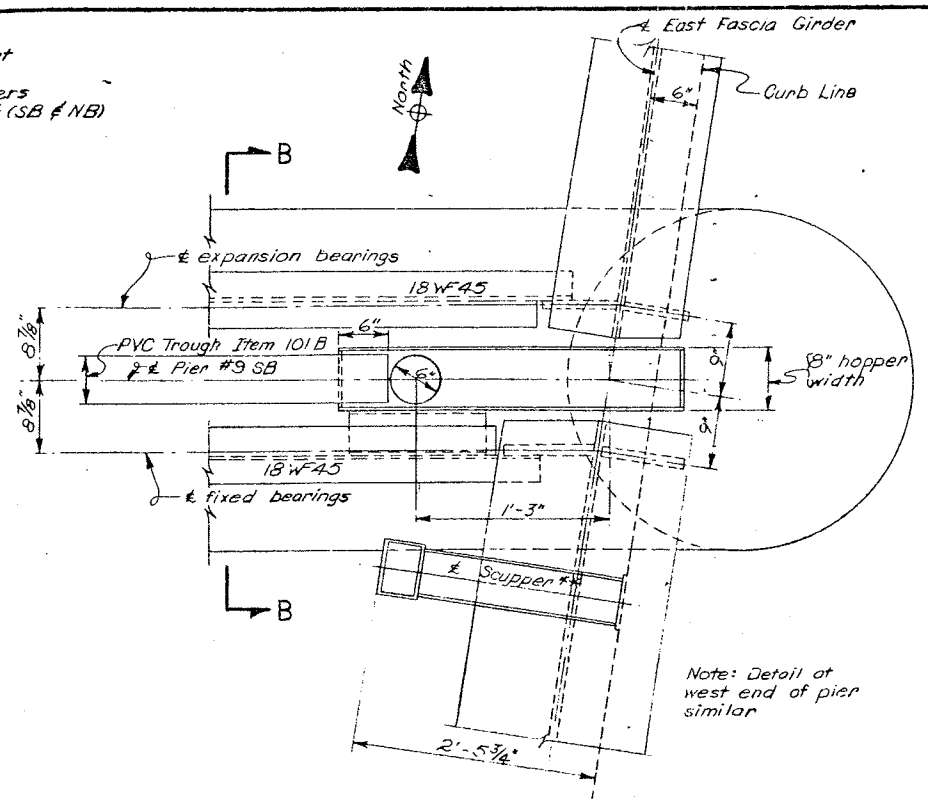

Note: Detail at west end of pier similar

PLAN AT EAST END OF PIER "9 SOUTHBOUND
Scale : 1" = 1'-0"

** Adjust exact location of scuppers which drain into downspouts systems so as to accommodate the location of the downspouts.
Adjust exact location of scuppers which drain directly onto the ground so as not to spill on piers or onto diaphragms

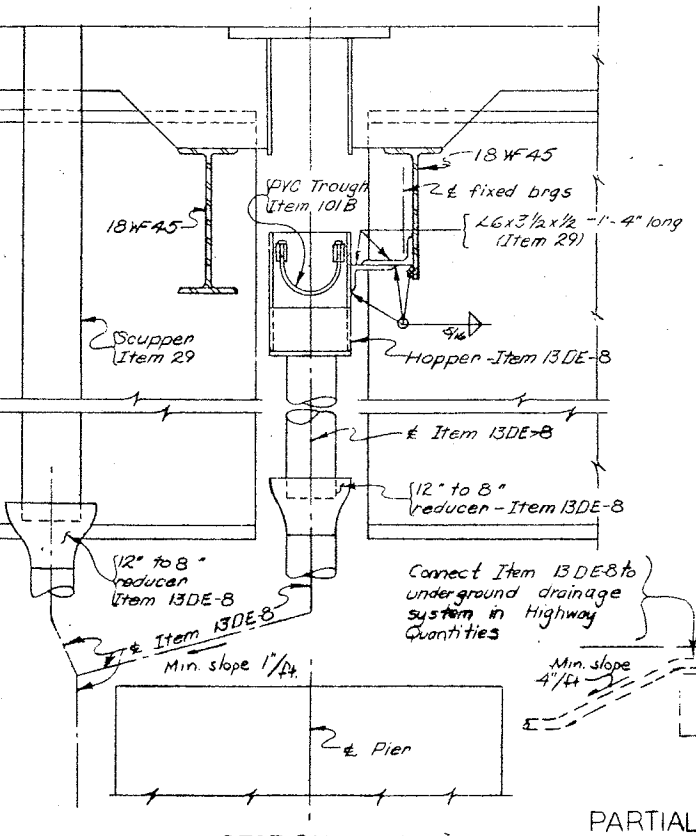

SECTION A-A
Scale : 1" = 1'-0"

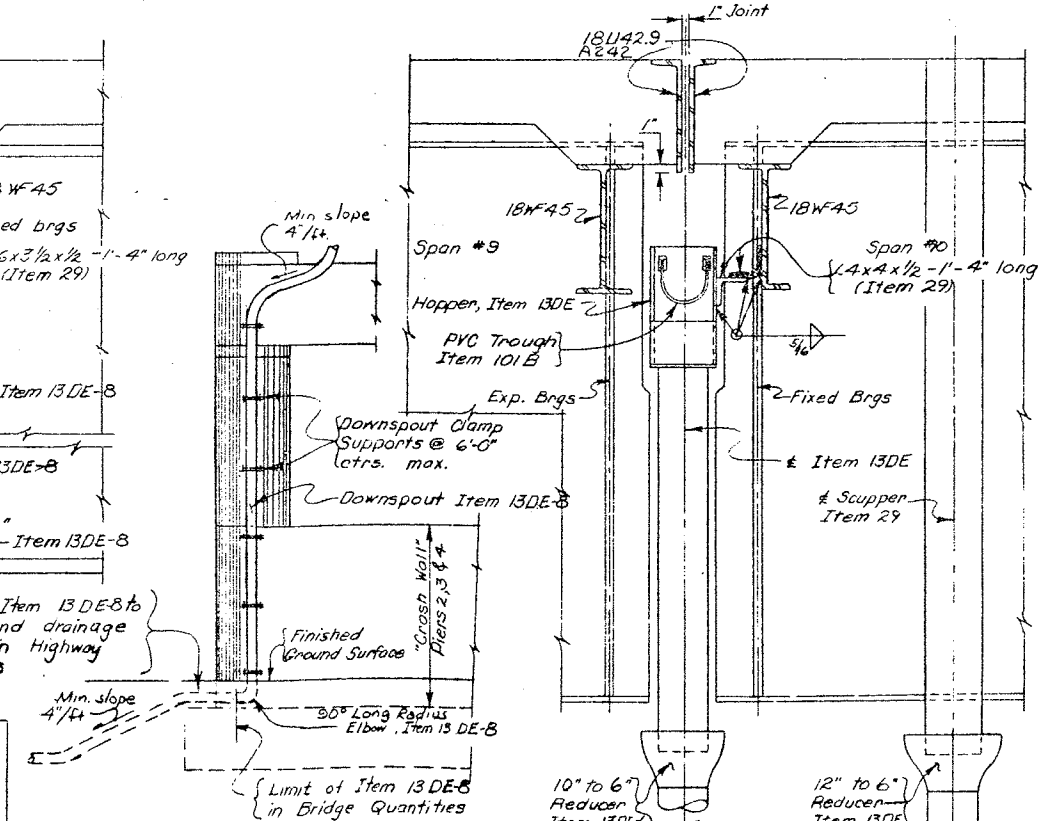

PARTIAL ELEVATION AT PIERS 1,2,3,4,5*,6 &7 (NB&SB)
Scale : 3/16" = 1'-0"

*No Hopper at Piers #6 ℄ #7 Downspout drains only the scupper.

SECTION B-B
Scale : 1" = 1'-0"

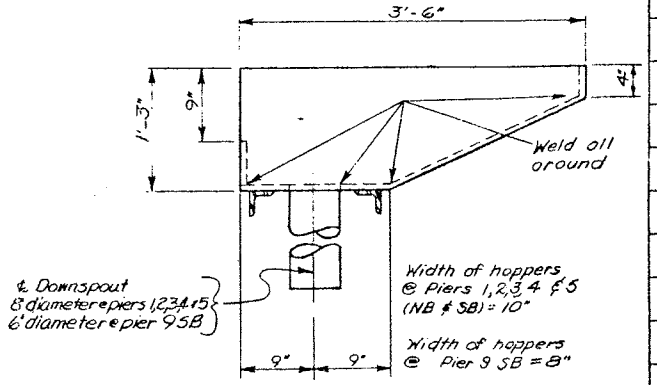

HOPPER ELEVATION
Scale : 1" = 1'-0"

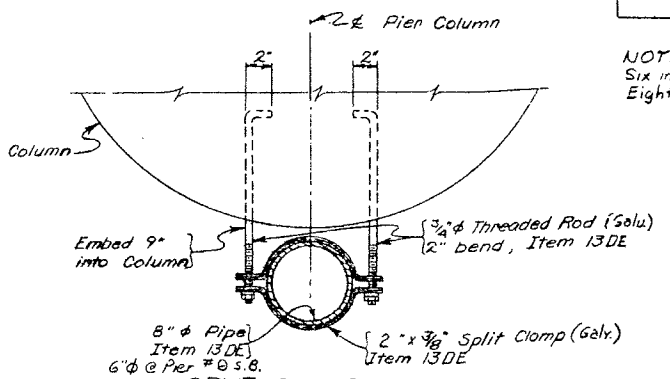

SPLIT CLAMP DETAIL
Scale : 1½" = 1'-0"

Hoppers and downspouts (including all necessary pipe supports, hangers, and fittings) shall be paid for under Item 13DE-6 & Item 13DE-8.

Hopper shall be fabricated from steel plates, 3/8 inch thick, A.S.T.M. Designation A36 Steel. Hopper shall be galvanized after fabrication is complete in accordance with M19.

All bends in downspouts will be long radius bends. All indicated slopes on horizontal pipe runs will be the minimum allowed, and the long radius bends will be fabricated to take this slope into account. All costs involved will be included in the price bid for Item 13DE-6 & Item 13DE-8

PIER NO.	JOINTS: EXP. JT. SEALED WITH PREFORMED JOINT SEALER	JOINTS: OPEN JOINT WITH HOPPER AND TROUGH	JOINTS: FINGER JOINT WITH HOPPER AND TROUGH	SCUPPER **	DOWNSPOUT
1		✓		(East ℄ West curb lines) North side of Pier	✓ (8" dia)
2		✓		(East ℄ West curb lines) North side of Pier	✓ (8" dia)
3			✓	(East ℄ West curb lines) North side of Pier	✓ (8" dia)
4			✓	None	✓ (8" dia.)
5			✓	(East ℄ West curb lines) South side of Pier	✓ (8" dia)
6	✓			(East ℄ West curb lines) South side of Pier	✓ (8" dia)
7	✓			(East ℄ West curb lines) South side of Pier	✓ (8" dia.)
8	✓			(East ℄ West curb lines) South side of Pier	
9	NB only	SB only		(East ℄ West curb lines) South side of Pier	SB only (8" dia)
10	✓			(East curb line only) South side of Pier	
11	✓			(East curb lines only) South side of pier	
12	✓			(East curb lines only) South side of pier	
13	✓			(East curb lines only) South side of pier	
14	✓			(East curb lines only) South side of pier	

NOTES:
Six inch diameter downspouts shall be paid for under Item 13 DE-6
Eight inch diameter downspouts shall be paid for under Item 13 DE-8

BRIDGE NO. 2
INTERSTATE ROUTE 481 OVER DEWITT YARDS

DOWNSPOUT DETAILS

DRAWING NO. 32 OF 50

PROJECT ENGINEER R Parker
IN CHARGE OF F.W. Eckel
DESIGNED BY
DESIGN CHECKED BY
DETAILED BY J. Dunnant
DETAIL CHECKED BY F.W. Eckel

F.I.S.H. 70-7

FED. RD. REG. NO.	STATE	FEDERAL AID PROJECT NO.	SHEET NO.	TOTAL SHEETS
1	NEW YORK	I-390-3(103) I-481-2(116)	2/3	3/3

INTERSTATE ROUTE 481 CONNECTION 370
BUTTERNUT INTERCHANGE (PHASE 2)
ONONDAGA COUNTY

Rail to be welded with full penetration groove welds and ground flush in the shop using the inert gas metal arc welding process (MIG). Wire shall be 5356 Filler Alloy. Welding of this joint will be permitted regardless of Note ① on Railing Detail Sheet.

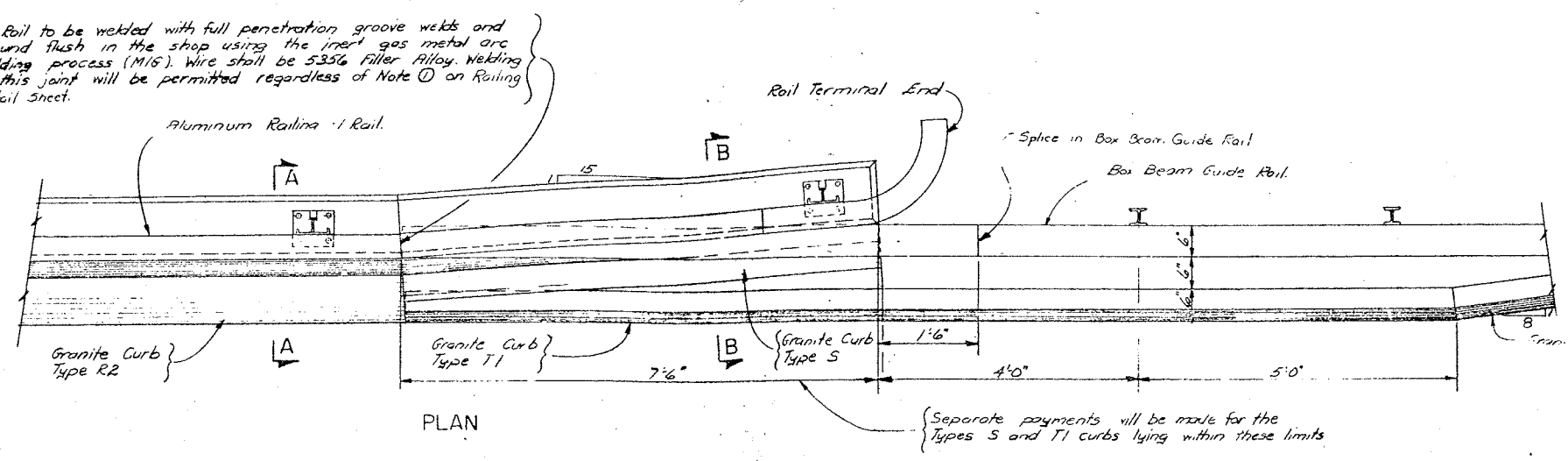

PLAN

{Separate payments will be made for the Types S and T1 curbs lying within these limits

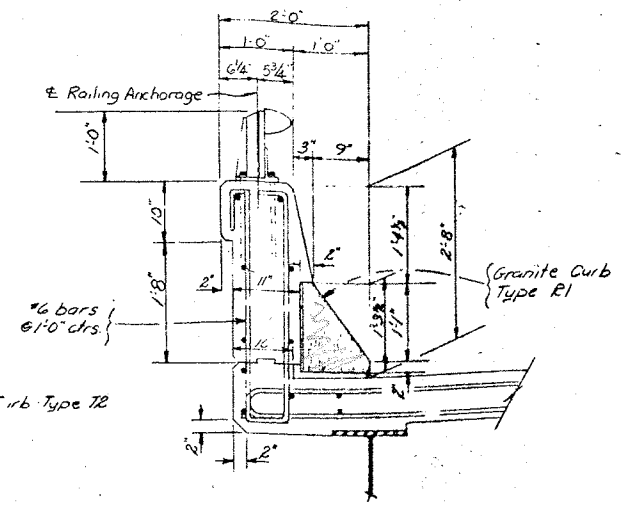

SECTION THRU SUPERSTRUCTURE

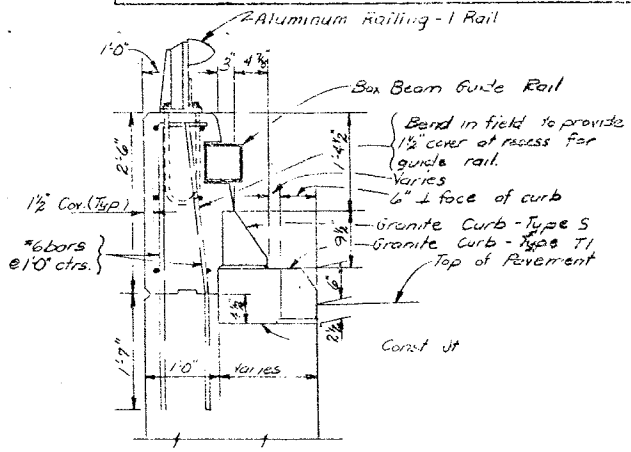

SECTION B-B

All chamfers shown on this sheet are 1" unless otherwise indicated.

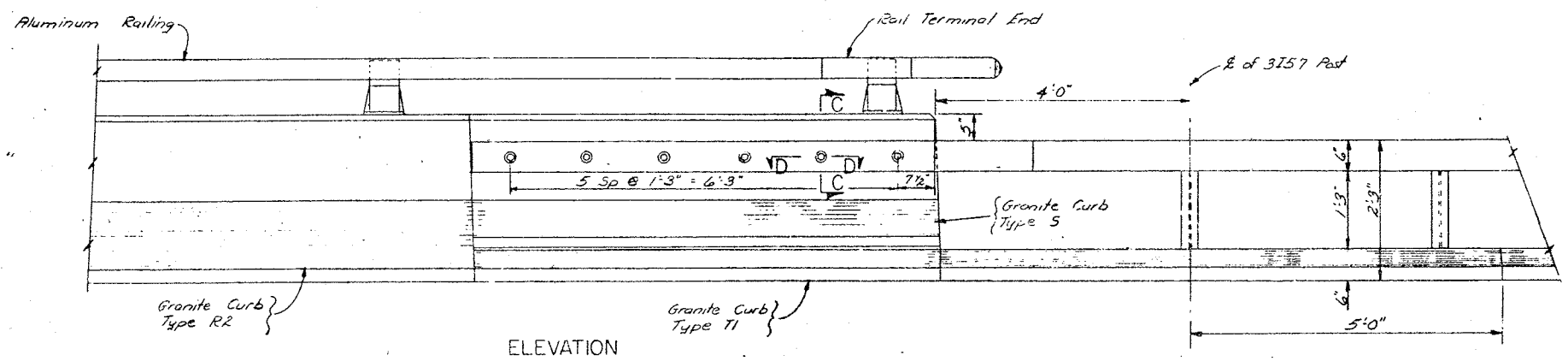

ELEVATION

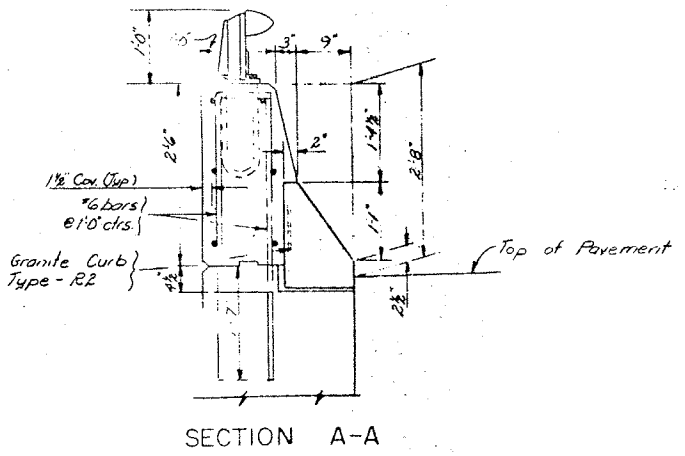

SECTION A-A

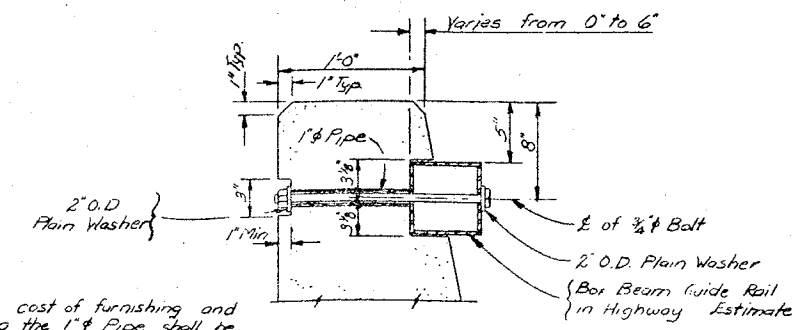

SECTION C-C

The cost of furnishing and placing the 1" ϕ Pipe shall be included in the unit price bid for the concrete in the parapet.

The cost of furnishing and placing the ¾" ϕ Bolts with their nuts and washers shall be included in the Box Beam Guide Rail Item.

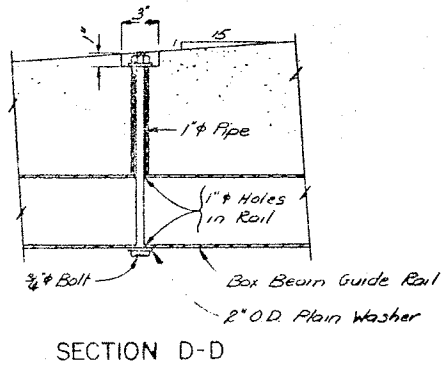

SECTION D-D

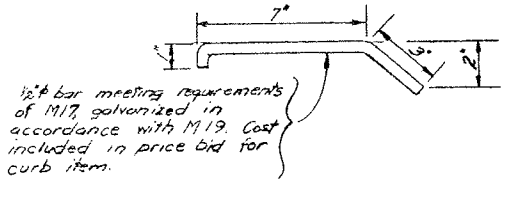

½" ϕ bar meeting requirements of M17, galvanized in accordance with M19. Cost included in price bid for curb item.

ANCHOR BAR

Note A:
Rake out joint to a depth of ¾" and tuck point flush with epoxy mortar.

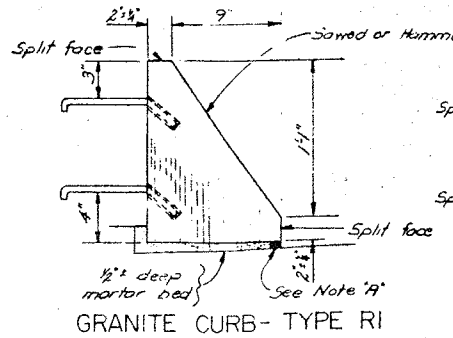

GRANITE CURB - TYPE R1

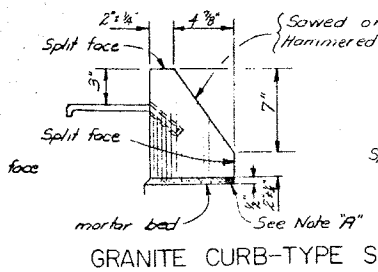

GRANITE CURB - TYPE S

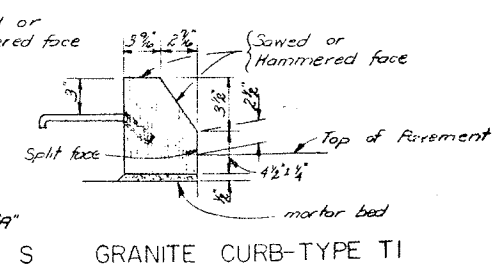

GRANITE CURB - TYPE T1

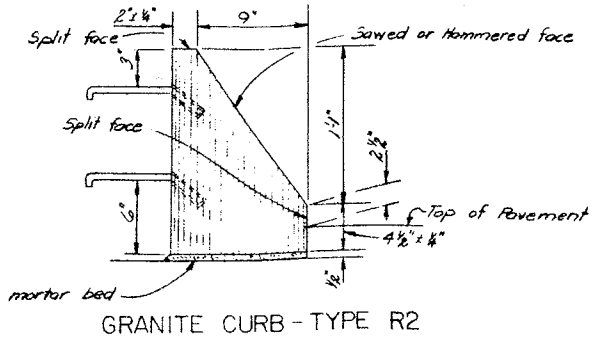

GRANITE CURB - TYPE R2

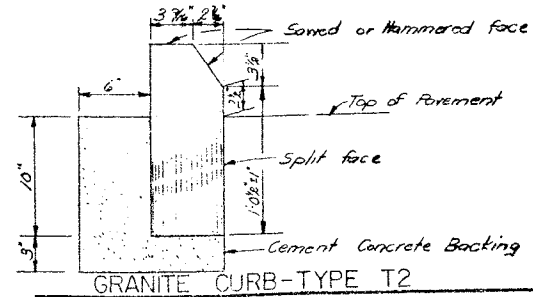

GRANITE CURB - TYPE T2

BRIDGE NO. 2
INTERSTATE ROUTE 481 OVER DEWITT YARDS

CONCRETE PARAPET

DRAWING No. 35 OF 50

DETAILED BY Vince Krzeskowiak
DETAIL CHECKED BY D. Granoff 1/1/68
REV.: D. Smith / Jim Earl

FED. RD. REG. NO.	STATE	FEDERAL AID PROJECT NO.	SHEET NO.	TOTAL SHEETS
1	NEW YORK	~~1-390-2(23)~~ 1-481-2(116)	220	899

INTERSTATE ROUTE CONNECTION 570
BUTTERNUT INTERCHANGE (PHASE 2)
ONONDAGA COUNTY

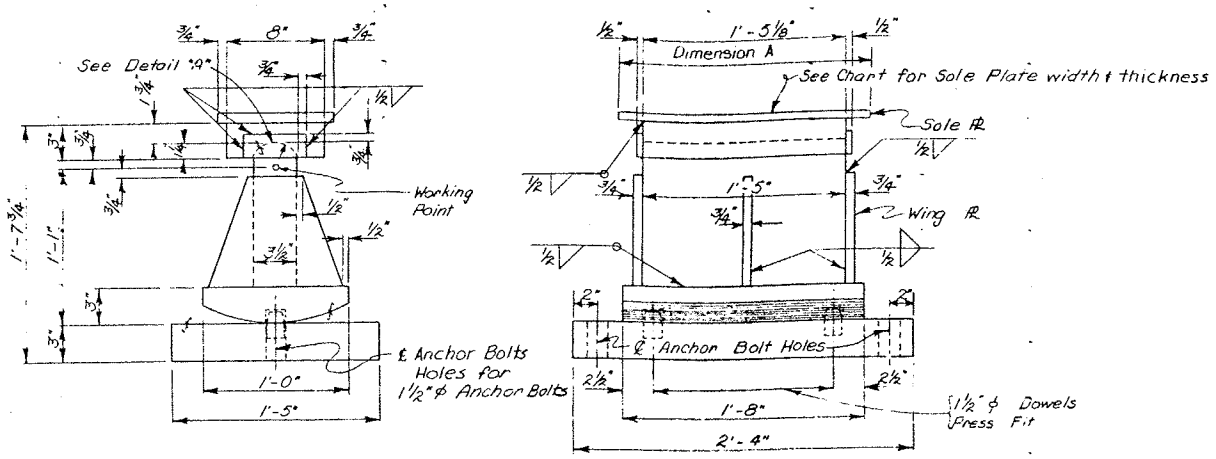

EXPANSION BEARING - TYPE II
Scale: 1½"=1'-0"

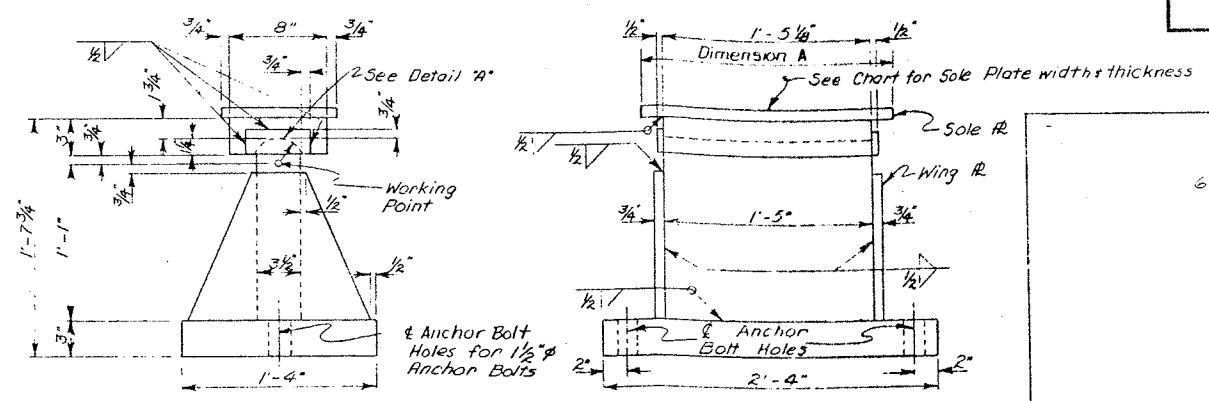

FIXED BEARING - TYPE II
Scale: 1½"=1'-0"

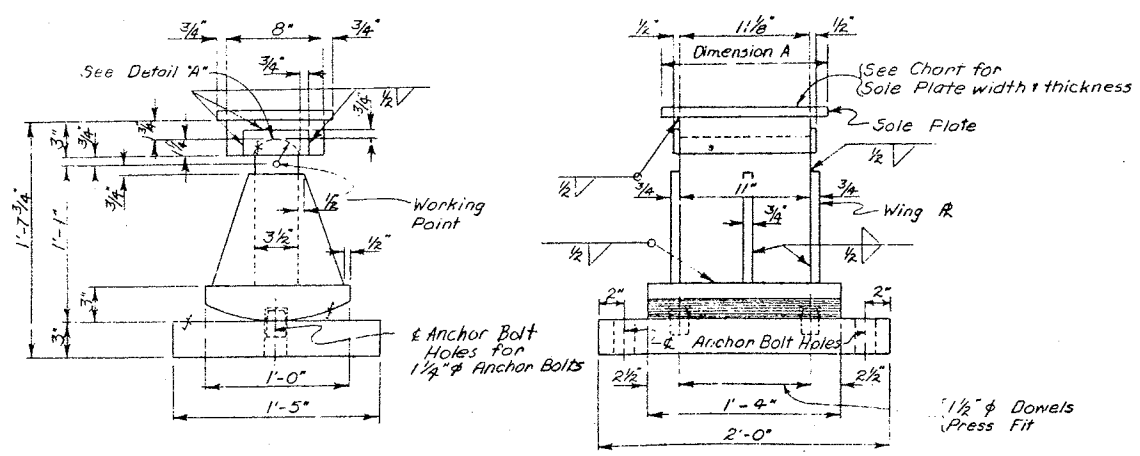

EXPANSION BEARING - TYPE I
Scale: 1½"=1'-0"

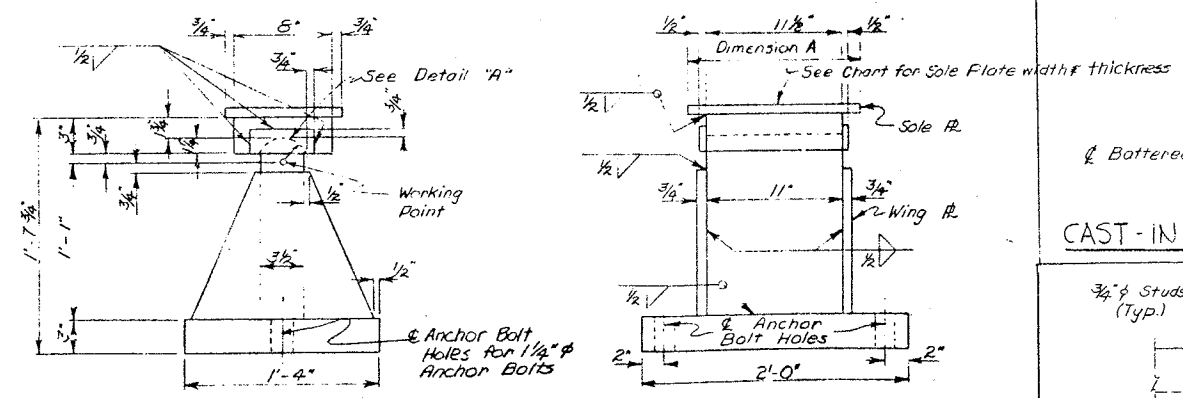

FIXED BEARING - TYPE I
Scale: 1½"=1'-0"

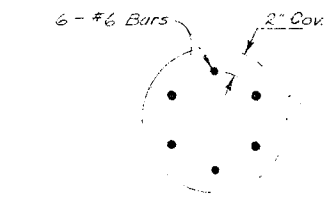

SECTION D-D
Scale: 1½"=1'-0"

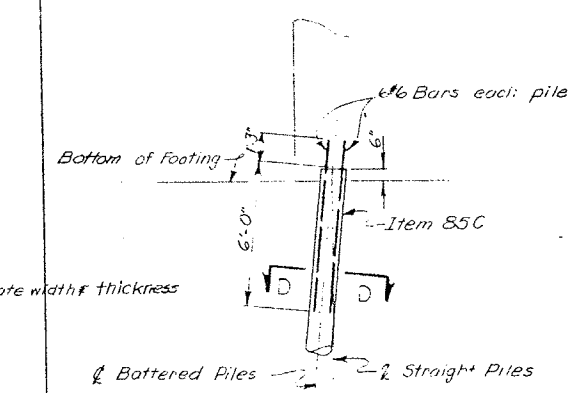

PILE ELEVATION
Scale: ¼"=1'-0"

CAST-IN-PLACE CONCRETE PILES ITEM 85C

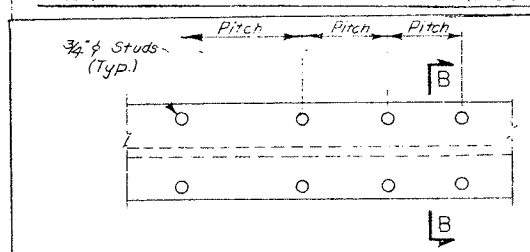

PARTIAL PLAN OF STUDS
Scale: None

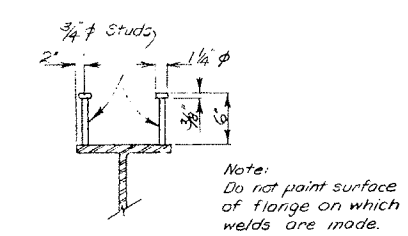

SECTION B-B
Scale: None

STUD SHEAR CONNECTORS ITEM 28B.

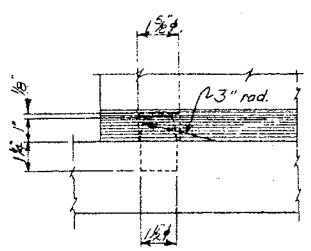

DETAIL OF DOWEL
Scale: 3"=1'-0"

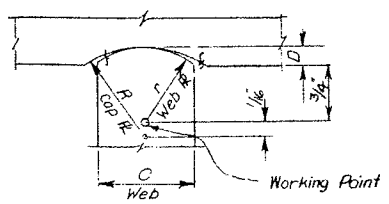

Bearing Type	R	r	C	D
Type I	2 1/16"	2"	3½"	1¼"
Type II	2 1/16"	2"	3½"	1¼"
Type III	2 1/16"	2"	3½"	1¼"

DETAIL A
No Scale

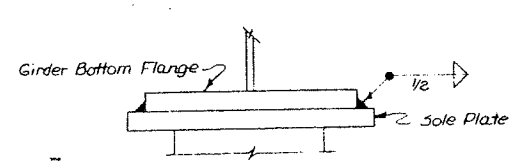

TYPICAL SOLE PLATE
TO GIRDER CONNECTION DETAIL
No Scale

PROJECT ENGINEER R. Parker
IN CHARGE OF F. Eckel
DESIGNED BY
DESIGN CHECKED BY
DETAILED BY J. Dumont
DETAIL CHECKED BY Y.C. Toppers

BRIDGE NO. 2
INTERSTATE ROUTE 481 OVER DEWITT YARDS

BEARINGS

DRAWING NO. 42 OF 50

F.I.S.H. 70-7

FED. RD. REG. NO.	STATE	FEDERAL AID PROJECT NO	SHEET NO.	TOTAL SHEETS
1	NEW YORK	I-481-2(116)	221	309

INTERSTATE ROUTE CONNECTION 570
BUTTERNUT INTERCHANGE (PHASE 2)
ONONDAGA COUNTY

Note: See Miscellaneous Drawing #42 for Detail "A" & for Detail of Dowels.

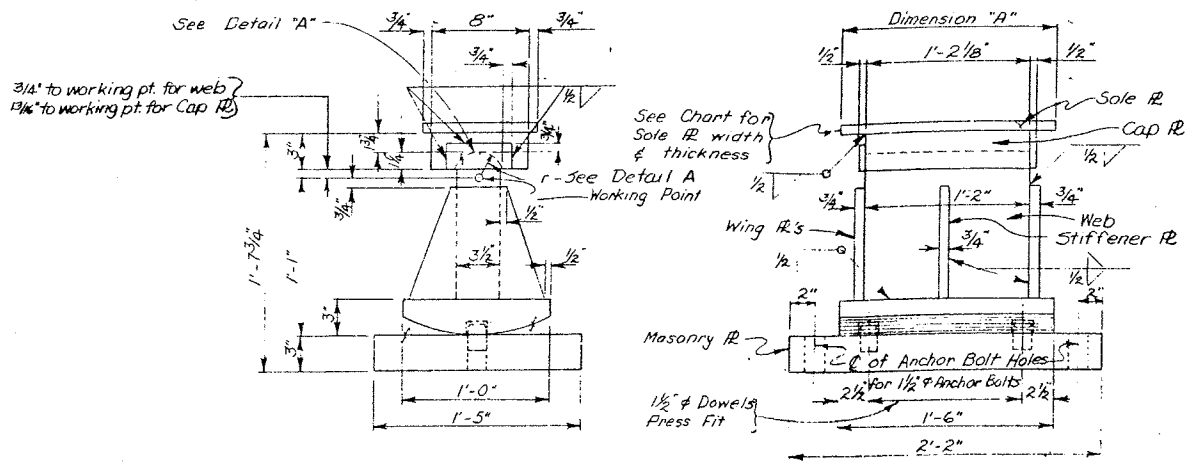

EXPANSION BEARING – TYPE III
Scale: 1½" = 1'-0"

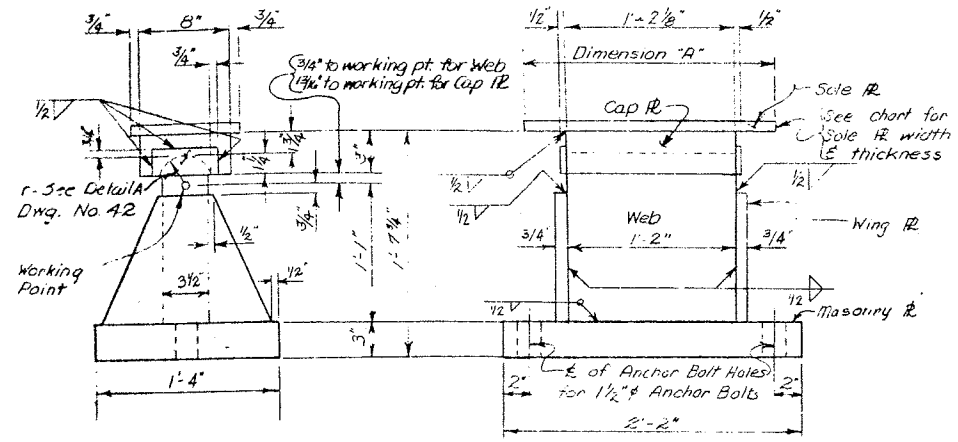

FIXED BEARING – TYPE III
Scale: 1½" = 1'-0"

BEARING SCHEDULE
SOUTHBOUND LANE

SPAN	GIRDER	BEARING TYPE EXP	BEARING TYPE FIXED	SOLE PL DIM "A"	SOLE PL THICKNESS EXP	SOLE PL THICKNESS FIXED
1	1	I	I	1'-2"	3/4	3/4
	2	I	I	1'-7"	3/4	3/4
	3	I	I	1'-7"	3/4	3/4
	4	I	I	1'-2"	3/4	3/4
2	1	III	III	1'-11"	7/8	3/4
	2	III	III	1'-11"	7/8	3/4
	3	III	III	1'-11"	7/8	3/4
	4	III	III	1'-11"	7/8	3/4
3	1	III	III	2'-6"	3/4	3/4
	2	III	III	2'-4"	3/4	3/4
	3	III	III	2'-4"	3/4	3/4
	4	III	III	2'-6"	3/4	3/4
4	1	II	II	2'-8"	3/4	3/4
	2	II	II	2'-2"	1	3/4
	3	II	II	2'-2"	1	3/4
	4	II	II	2'-8"	1	3/4
5	1	II	II	2'-8"	3/4	7/8
	2	II	II	2'-2"	3/4	7/8
	3	II	II	2'-2"	3/4	7/8
	4	II	II	2'-8"	3/4	7/8
6	1	II	II	2'-8"	3/4	3/4
	2	II	II	2'-2"	3/4	1
	3	II	II	2'-2"	3/4	1
	4	II	II	2'-8"	3/4	3/4
7	1	II	I	1'-8"	3/4	1
	2	I	I	2'-0"	3/4	1
	3	I	I	2'-0"	3/4	1
	4	II	I	1'-8"	3/4	1
8	1	I	I	2'-1"	3/4	1
	2	I	I	2'-0"	3/4	1
	3	I	I	2'-0"	3/4	1
	4	I	I	2'-1"	3/4	1
9	1	I	I	2'-1"	3/4	1
	2	I	I	2'-0"	3/4	1
	3	I	I	2'-0"	3/4	1 1/8
	4	I	I	2'-1"	3/4	1 1/8
10	1	I	I	2'-2"	3/4	1 1/8
	2	I	I	2'-2"	3/4	1 1/8
	3	I	I	2'-2"	3/4	1 1/8
	4	I	I	2'-2"	3/4	1 1/8
11	1	I	I	2'-1"	3/4	1 1/4
	2	I	I	2'-0"	3/4	1 1/4
	3	I	I	2'-0"	3/4	1 1/4
	4	I	I	2'-1"	3/4	1 1/4
12	1	I	I	2'-1"	3/4	1 1/4
	2	I	I	2'-0"	3/4	1 1/4
	3	I	I	2'-0"	3/4	1 1/4
	4	I	I	2'-1"	3/4	1 1/4
13	1	I	I	2'-1"	3/4	1 1/4
	2	I	I	2'-0"	3/4	1 1/4
	3	I	I	2'-0"	3/4	1 1/4
	4	I	I	2'-1"	3/4	1 1/4
14	1	I	I	2'-1"	3/4	1 1/4
	2	I	I	2'-0"	3/4	1 1/4
	3	I	I	2'-0"	3/4	1 1/4
	4	I	I	2'-1"	3/4	1 1/4
15	1	I	I	2'-1"	3/4	3/4
	2	I	I	2'-0"	3/4	3/4
	3	I	I	2'-0"	3/4	3/4
	4	I	I	2'-1"	3/4	3/4

BEARING SCHEDULE
NORTHBOUND LANE

SPAN	GIRDER	BEARING TYPE EXP	BEARING TYPE FIXED	SOLE PL DIM "A"	SOLE PL THICKNESS EXP	SOLE PL THICKNESS FIXED
1	1	I	I	1'-2"	3/4	3/4
	2	I	I	1'-7"	3/4	3/4
	3	I	I	1'-7"	3/4	3/4
	4	I	I	1'-2"	3/4	3/4
2	1	III	III	1'-11"	7/8	3/4
	2	III	III	1'-11"	7/8	3/4
	3	III	III	1'-11"	7/8	3/4
	4	III	III	1'-11"	7/8	3/4
3	1	III	III	2'-6"	3/4	3/4
	2	III	III	2'-4"	3/4	3/4
	3	III	III	2'-4"	3/4	3/4
	4	III	III	2'-6"	3/4	3/4
4	1	II	II	2'-8"	3/4	3/4
	2	II	II	2'-2"	1	3/4
	3	II	II	2'-2"	1	3/4
	4	II	II	2'-8"	3/4	3/4
5	1	II	II	2'-8"	3/4	7/8
	2	II	II	2'-2"	3/4	7/8
	3	II	II	2'-2"	3/4	7/8
	4	II	II	2'-8"	3/4	7/8
6	1	II	II	2'-8"	3/4	3/4
	2	II	II	2'-2"	3/4	1
	3	II	II	2'-2"	3/4	1
	4	II	II	2'-8"	3/4	3/4
7	1	II	I	1'-8"	3/4	1
	2	I	I	2'-0"	3/4	1
	3	I	I	2'-0"	3/4	1
	4	II	I	1'-8"	3/4	1
8	1	I	I	2'-1"	3/4	1
	2	I	I	2'-0"	3/4	1
	3	I	I	2'-0"	3/4	1
	4	I	I	2'-1"	3/4	1
9	1	I	I	2'-1"	3/4	1
	2	I	I	2'-0"	3/4	1 1/8
	3	I	I	2'-0"	3/4	1 1/8
	4	I	I	2'-1"	3/4	1 1/8
10	1	I	I	2'-1"	3/4	1 1/8
	2	I	I	2'-0"	3/4	1 1/8
	3	I	I	2'-0"	3/4	1 1/8
	4	I	I	2'-1"	3/4	1 1/8
11	1	I	I	2'-1"	3/4	1 1/4
	2	I	I	2'-0"	3/4	1 1/8
	3	I	I	2'-0"	3/4	1 1/4
	4	I	I	2'-1"	3/4	1 1/4
12	1	I	I	2'-1"	3/4	1 1/4
	2	I	I	2'-0"	3/4	1 1/4
	3	I	I	2'-0"	3/4	1 1/4
	4	I	I	2'-1"	3/4	1 1/4
13	1	I	I	2'-1"	3/4	1 1/4
	2	I	I	2'-0"	3/4	1 1/4
	3	I	I	2'-0"	3/4	1 1/4
	4	I	I	2'-1"	3/4	1 1/4
14	1	I	I	2'-1"	3/4	1 1/4
	2	I	I	2'-0"	3/4	1 1/4
	3	I	I	2'-0"	3/4	1 1/4
	4	I	I	2'-1"	3/4	1 1/4
15	1	I	I	2'-1"	3/4	3/4
	2	I	I	2'-0"	3/4	3/4
	3	I	I	2'-0"	3/4	3/4
	4	I	I	2'-1"	3/4	3/4

PROJECT ENGINEER R. PARKER
IN CHARGE OF J. B. SHERMAN
DESIGNED BY
DESIGN CHECKED BY
DETAILED BY J. DURRANT
DETAIL CHECKED BY M. G. Jospeczak

BRIDGE NO. 2
INTERSTATE ROUTE 481 OVER DEWITT YARDS

BEARINGS

DRAWING NO. 43 OF 50

BIN 1093572 P.O. 19

D251438

FED. ROAD REG. NO.	STATE	FEDERAL AID PROJECT NO.	SHEET NO.	TOTAL SHEETS
1	N.Y.	IR-481-6(79) BH1-481-6(79)	37	66

INTERSTATE ROUTE CONNECTION 570
BUTTERNUT INTERCHANGE - PHASE 2
BUTTERNUT INTERCHANGE TO COLLAMER,
SH 70-7 ONONDAGA COUNTY

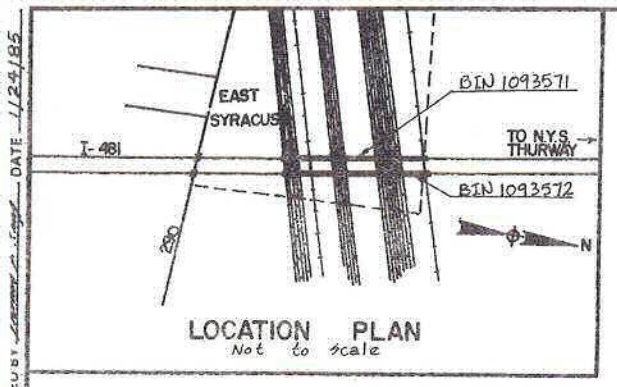

LOCATION PLAN
Not to scale

LOAD RATING	H-S LOADING
INVENTORY	OPERATING
HS 21.7 (39T) L.F. *	HS 36.3 (65T) L.F. *

Northbound and Southbound Bridges
* L.F. = Load Factor

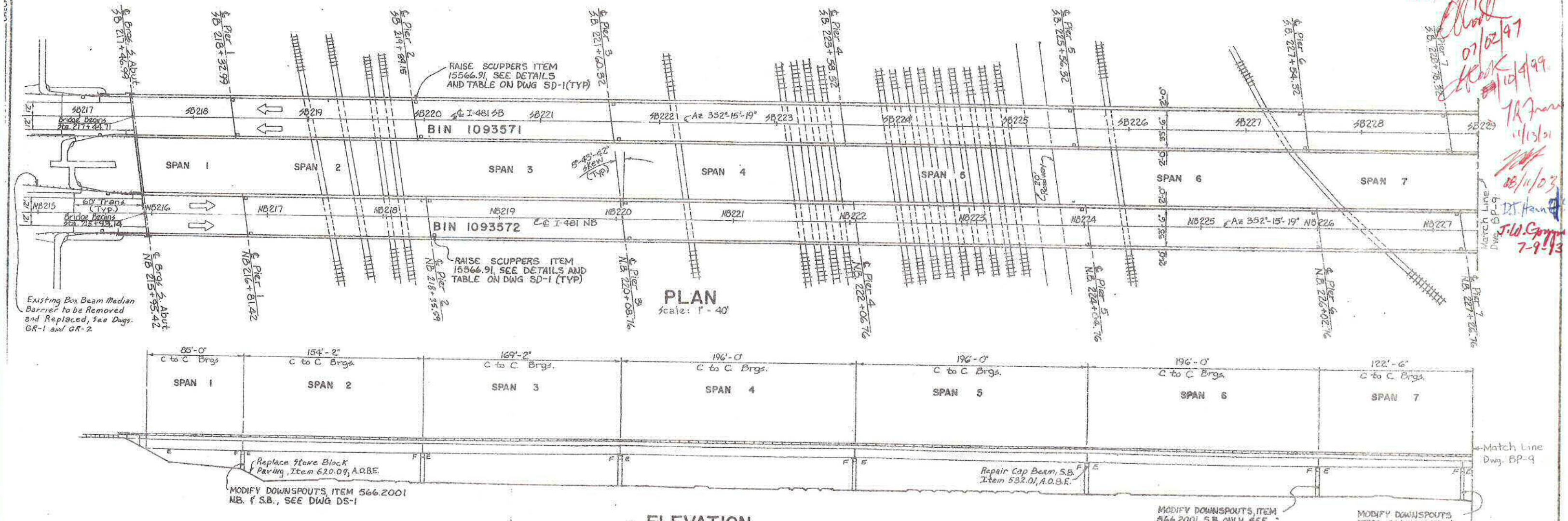

ELEVATION
Scale: 1" = 40'

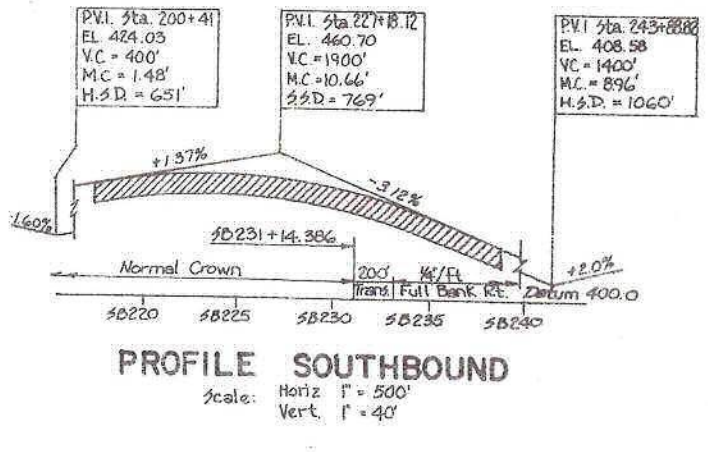

PROFILE SOUTHBOUND
Scale: Horiz. 1" = 500'
Vert. 1" = 40'

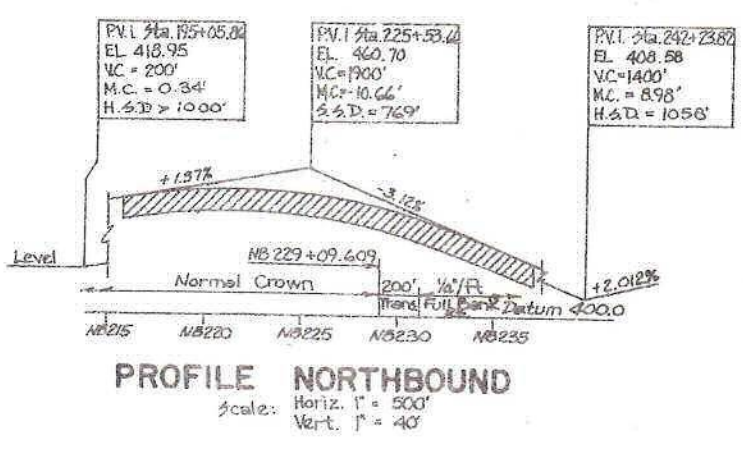

PROFILE NORTHBOUND
Scale: Horiz. 1" = 500'
Vert. 1" = 40'



PROPOSED PROFILE
Not to Scale

AS - BUILT REVISIONS

SIGNATURE DATE

BIN 1093571 AND 1093572
SB AND NB OVER CONRAIL

STATE OF NEW YORK
DEPARTMENT OF TRANSPORTATION

DRAWING NO. | SCALE | DATE | SHEET NO.

DESIGNED BY ... DATE 1/24/85

O. Cook 08/17/95
O. Cook 07/02/97
O. Cook 10/9/99
T.R. Franz 11/13/01
08/11/03
D.T. Hannon
T.W. Gamper 7-9-13

BIN 1093572

D251436

FED. ROAD REG. NO.	STATE	FEDERAL AID PROJECT NO.	SHEET NO.	TO SH
1	N.Y.	IR-481-(174) BH: 481-(174.	39	6

INTERSTATE ROUTE CONNECTION 570
BUTTERNUT INTERCHANGE - PHASE 2
BUTTERNUT INTERCHANGE TO COLLAMER,
SH 70-7 ONONDAGA COUNTY

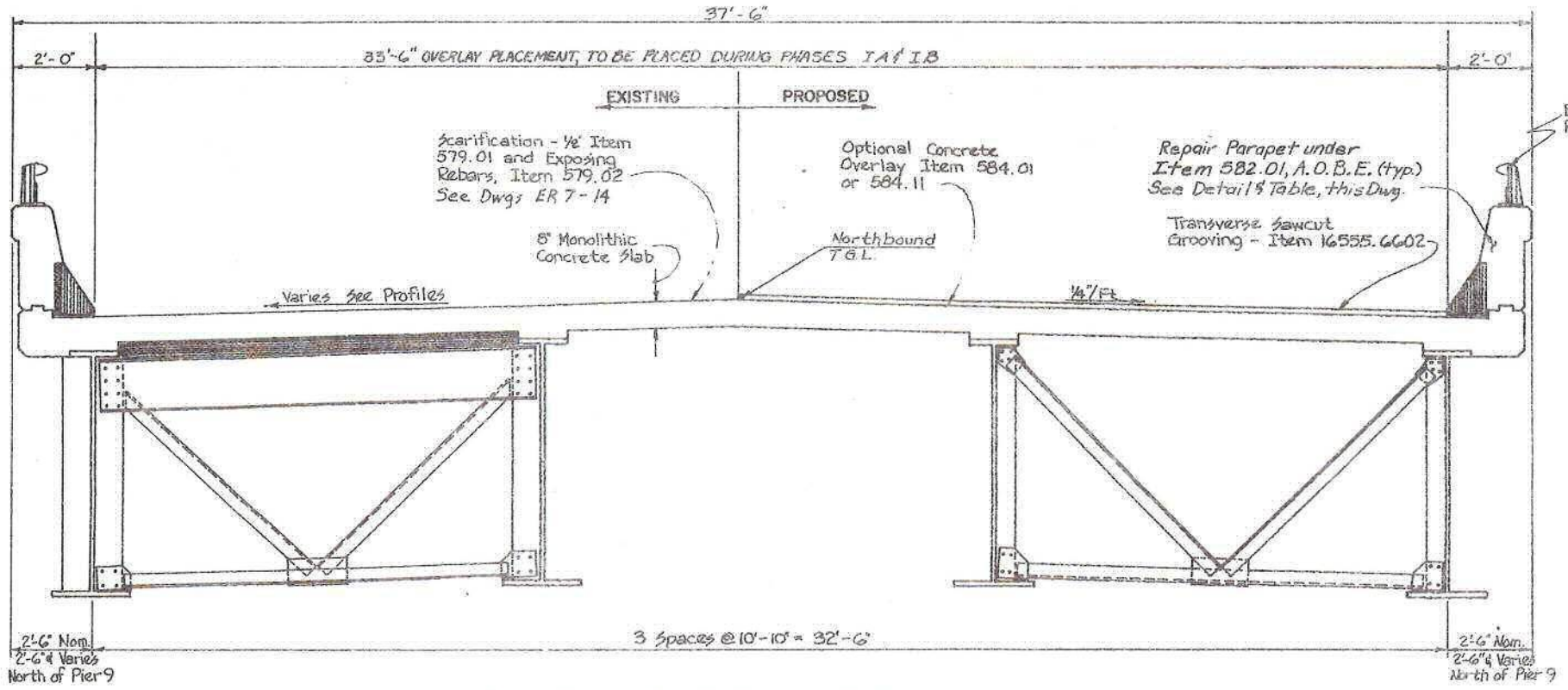

TYPICAL BRIDGE SECTION
(N.B. Bridge Looking North)
Scale: ½" = 1'-0"

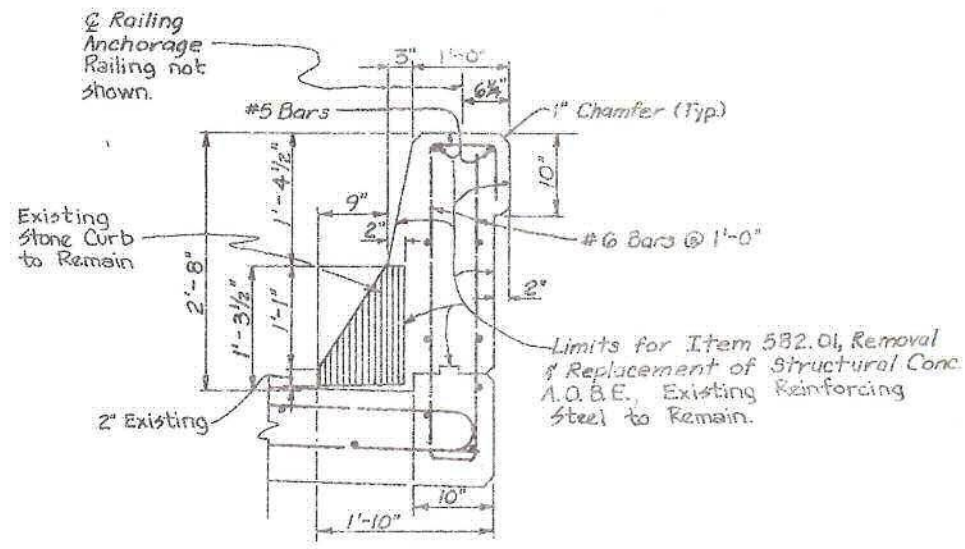

PARAPET REPAIR DETAIL
Scale: 1"=1'-0"

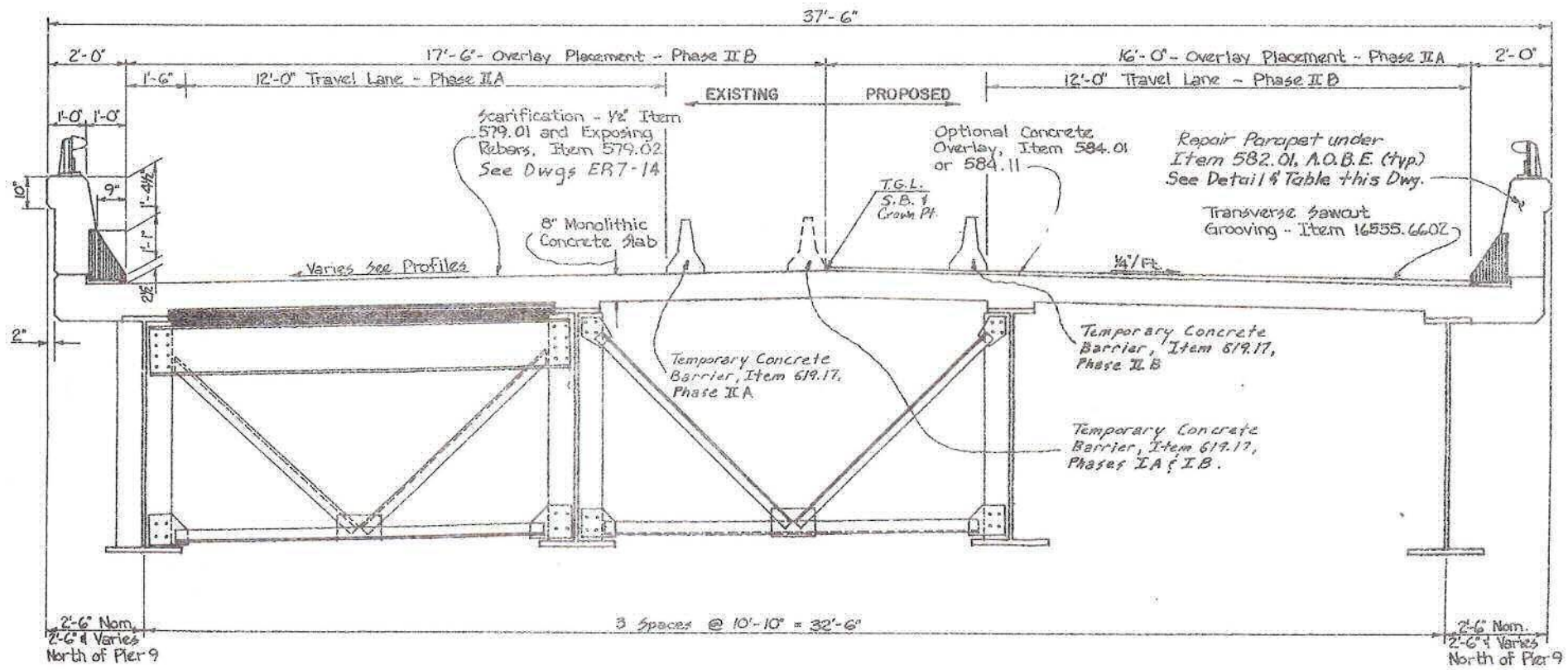

TYPICAL BRIDGE SECTION
(S.B. Bridge Looking North)
Scale: ½" = 1'-0"

REPAIR OF PARAPET WALL Item 582.01			
BIN 1093571		BIN 1093572	
SPAN #	EST. LENGTH	SPAN #	EST. LENGTH
4, Rt Side	170 Ft.	10, Rt Side	55'
4, Lt Side	70 Ft.	15, Lt Side	20'

AS - BUILT REVISIONS

SIGNATURE DATE

BIN 1093571 AND 1093572
SB AND NB OVER CONRAIL

STATE OF NEW YORK
DEPARTMENT OF TRANSPORTATION

DRAWING No.	SCALE	DATE	REGION	SHEET
BP10	As shown		3	39

DESIGNED BY Howard L. Sage CHECKED BY Ted Bruce ESTIMATED BY Linda Bruce CHECKED BY Howard L. Sage DATE 4/24/96
DRAFTED BY CHECKED BY
IN CHARGE OF Ted Bruce HC 47-2 (5/76)

D251438

FED. ROAD REG. NO.	STATE	FEDERAL AID PROJECT NO.	SHEET NO.	TOTAL SHEETS
	N.Y.	IR-431-(174) BHI-481-(174)	62	66

INTERSTATE ROUTE CONNECTION 570
BUTTERNUT INTERCHANGE - PHASE 2
BUTTERNUT INTERCHANGE TO COLLAMER,
SH 70-7 ONONDAGA COUNTY

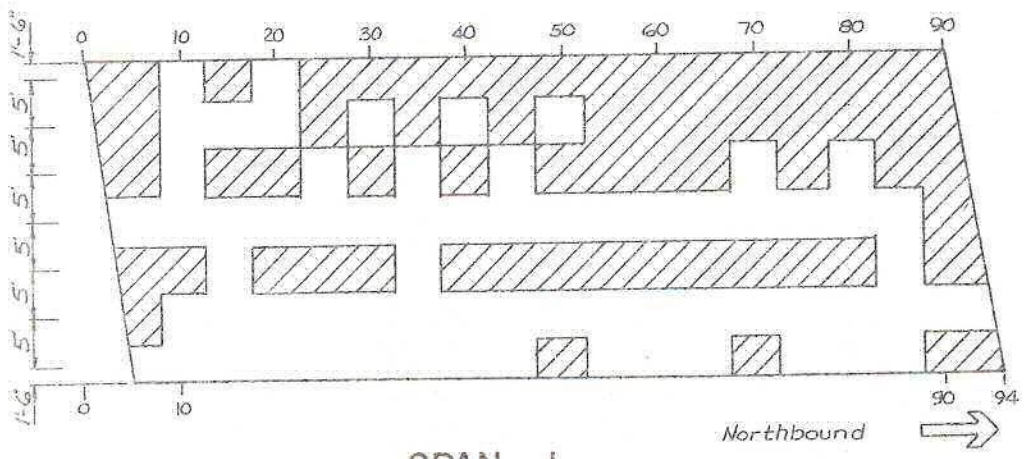

SPAN 1

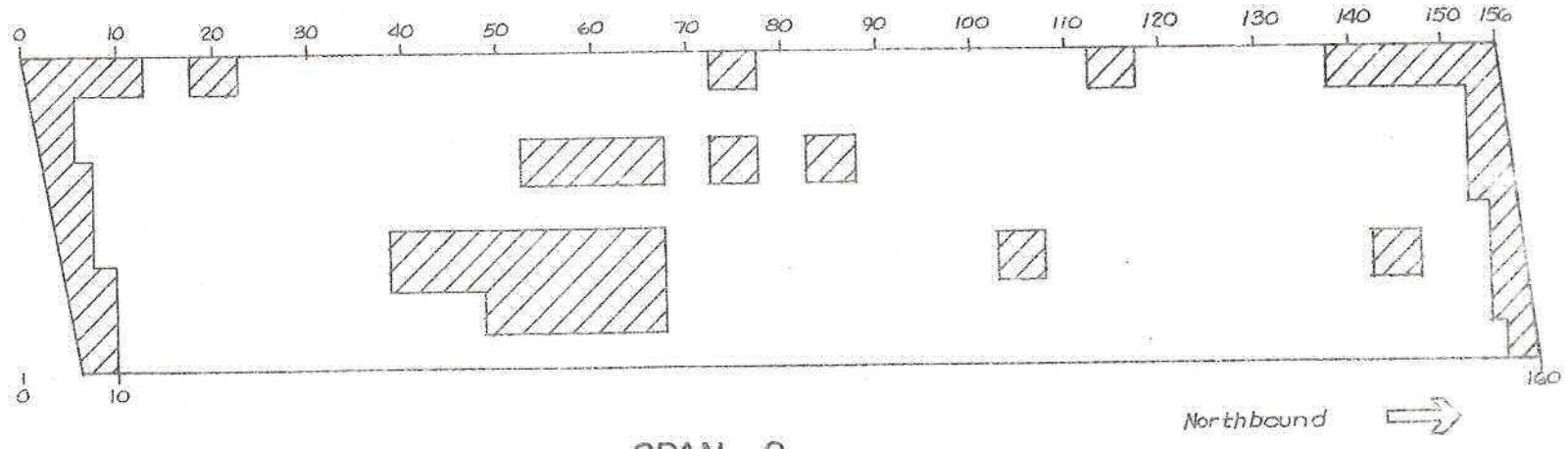

SPAN 2

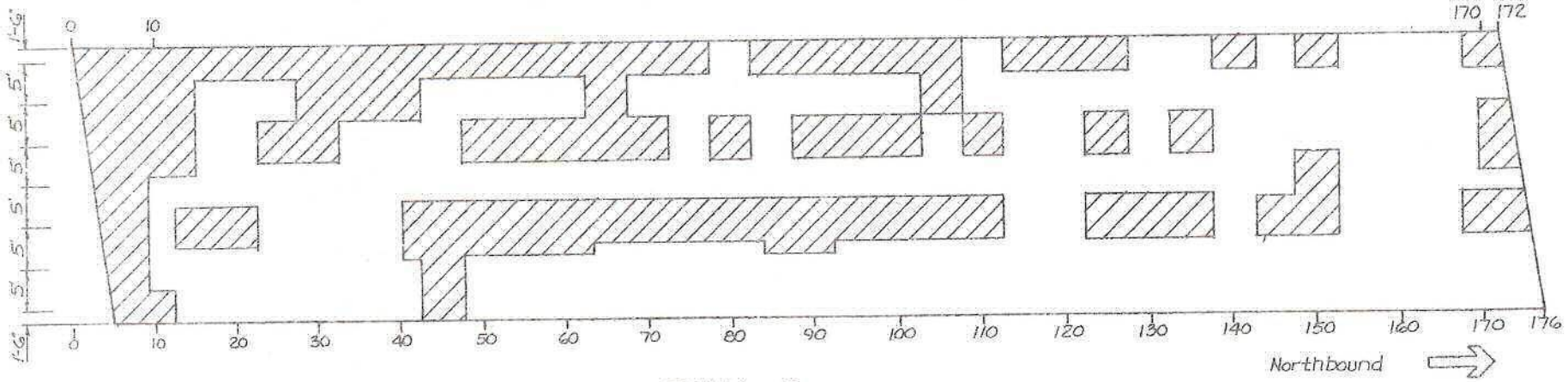

SPAN 3



Approximate Area for Exposing Reinforcing Bars, Item 579.02

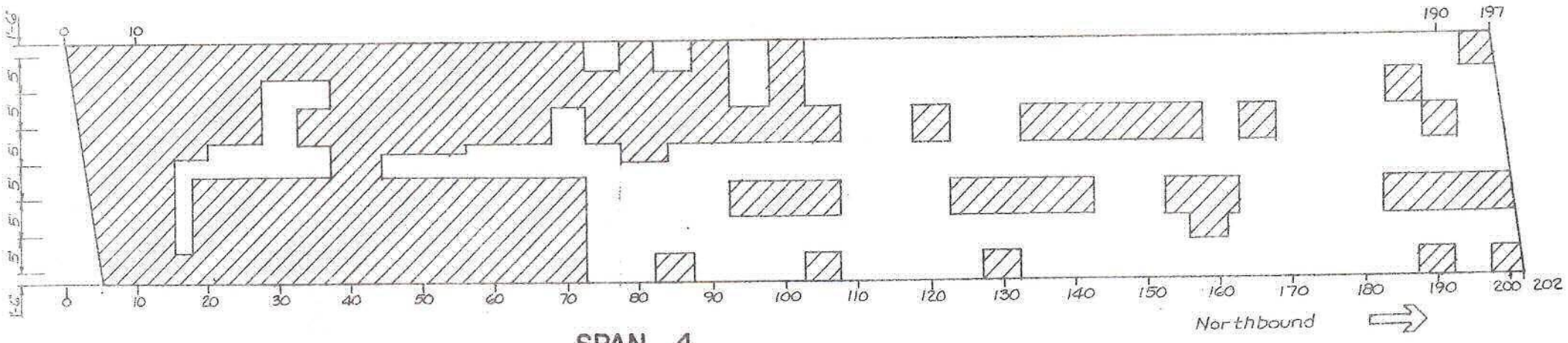

SPAN 4

AS - BUILT REVISIONS

SIGNATURE DATE

BIN 1093572 I-481 NORTHBOUND OVER CONRAIL

STATE OF NEW YORK
DEPARTMENT OF TRANSPORTATION

DRAWING No.	SCALE	DATE	REGION	SHEET NO.
ER-11			3	62

D251438

FED. ROAD REG. NO.	STATE	FEDERAL AID PROJECT NO.	SHEET NO.	TOTAL SHEETS
1	N.Y.	IR-481-(174) BIN 1093572	64	66

INTERSTATE ROUTE CONNECTION 570
BUTTERNUT INTERCHANGE - PHASE 2
BUTTERNUT INTERCHANGE TO COLLAMER,
SH 70-7 ONONDAGA COUNTY

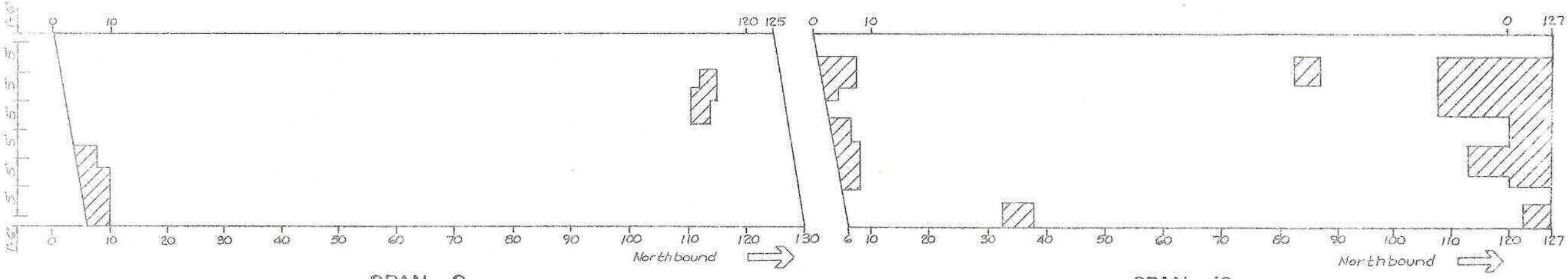

SPAN 9

SPAN 10

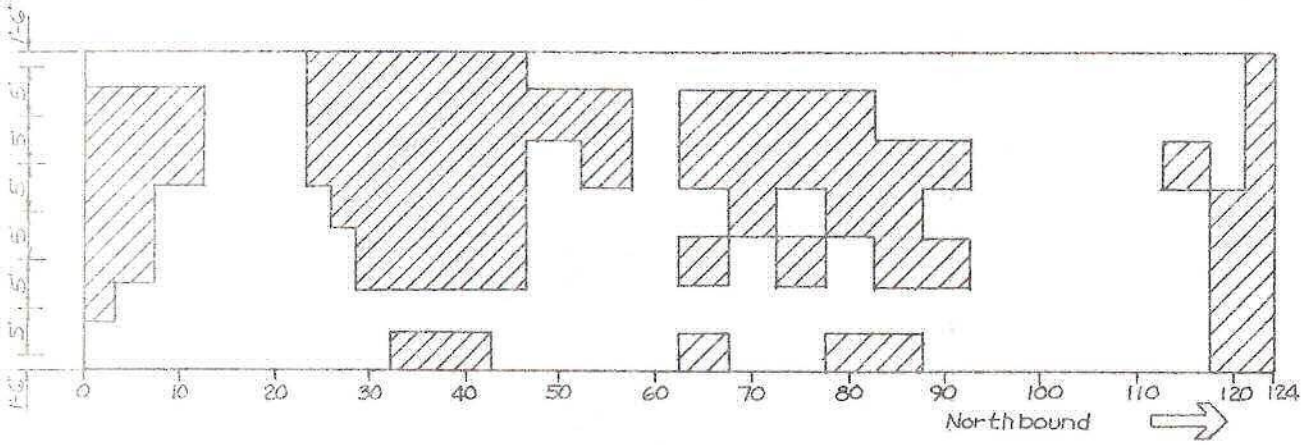

SPAN 11

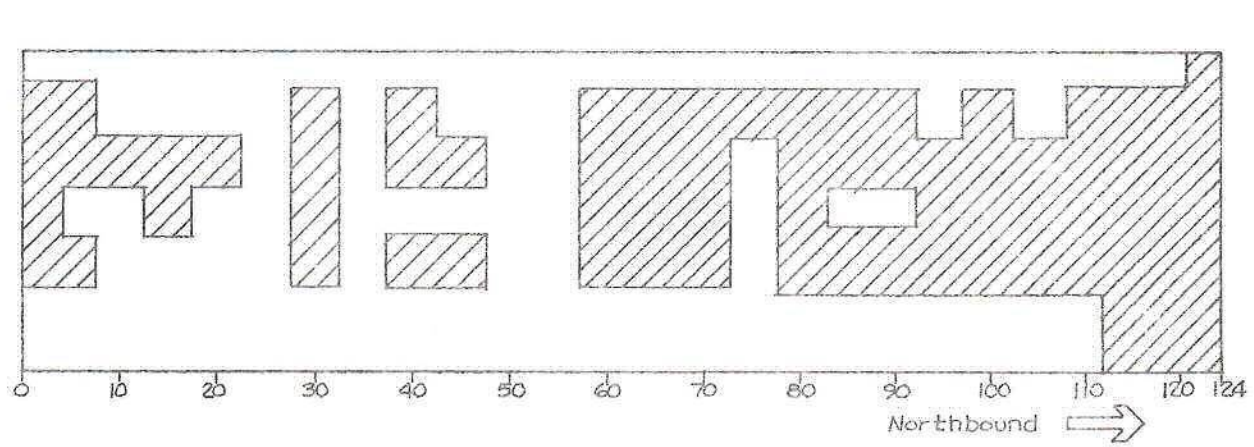

SPAN 12

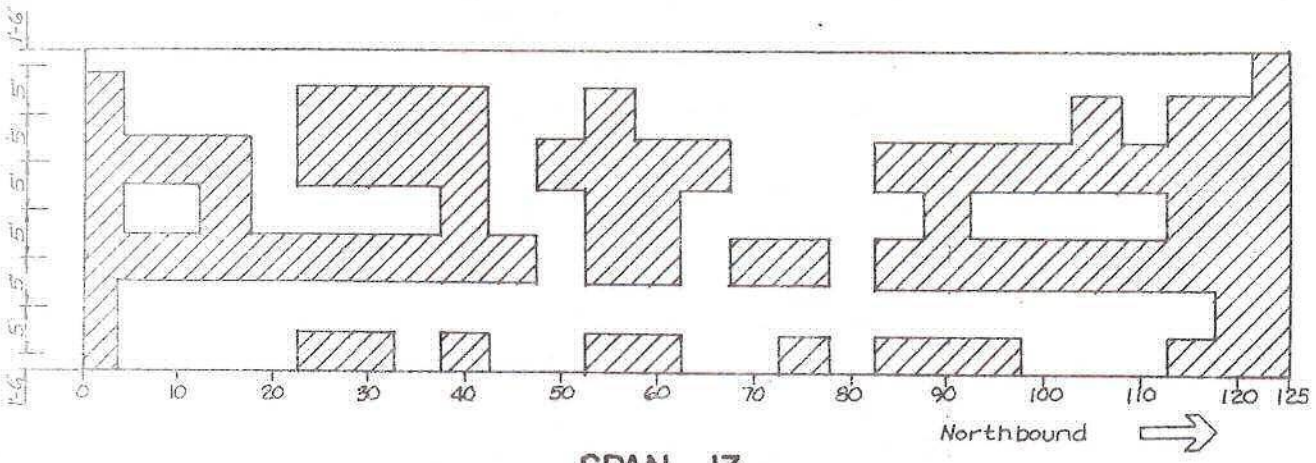

SPAN 13

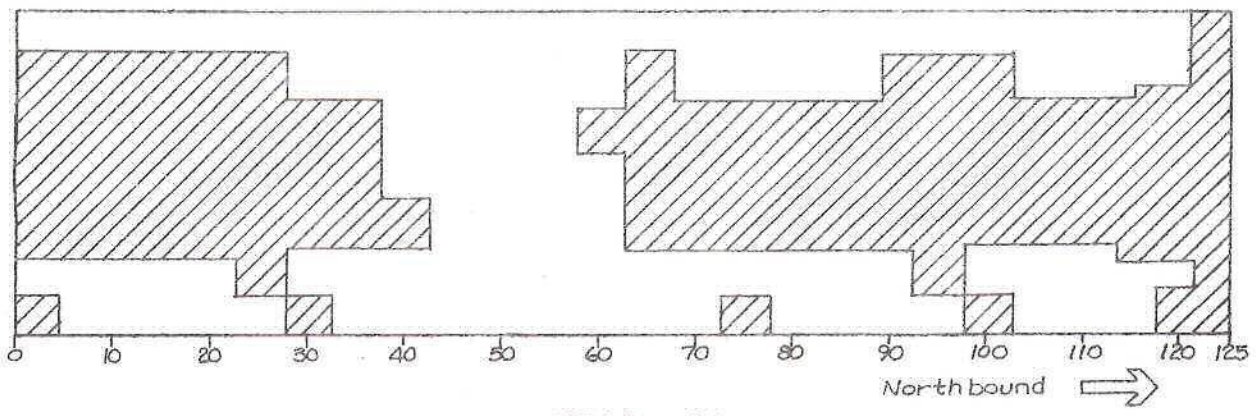

SPAN 14



Approximate Area for Exposing Reinforcing Bars, Item 579.02

AS - BUILT REVISIONS

SIGNATURE DATE

BIN 1093572 I-481 NORTHBOUND OVER CONRAIL

STATE OF NEW YORK
DEPARTMENT OF TRANSPORTATION

DRAWING No.	SCALE	DATE	REGION	SHEET NO.
ER-13			3	64

DESIGNED BY Lewis & Zeh CHECKED BY Lewis & Zeh DRAFTED BY ESTIMATED BY Mark Cole DATE 1/24/96
IN CHARGE OF WORK

D251436

FED. ROAD REG. NO.	STATE	FEDERAL AID PROJECT NO.	SHEET NO.	TO SH
1	N.Y.	IR-481-(174) BHI-481-(174)	63	6

INTERSTATE ROUTE CONNECTION 570
BUTTERNUT INTERCHANGE - PHASE 2
BUTTERNUT INTERCHANGE TO COLLAMER,
SH 70-7 ONONDAGA COUNTY

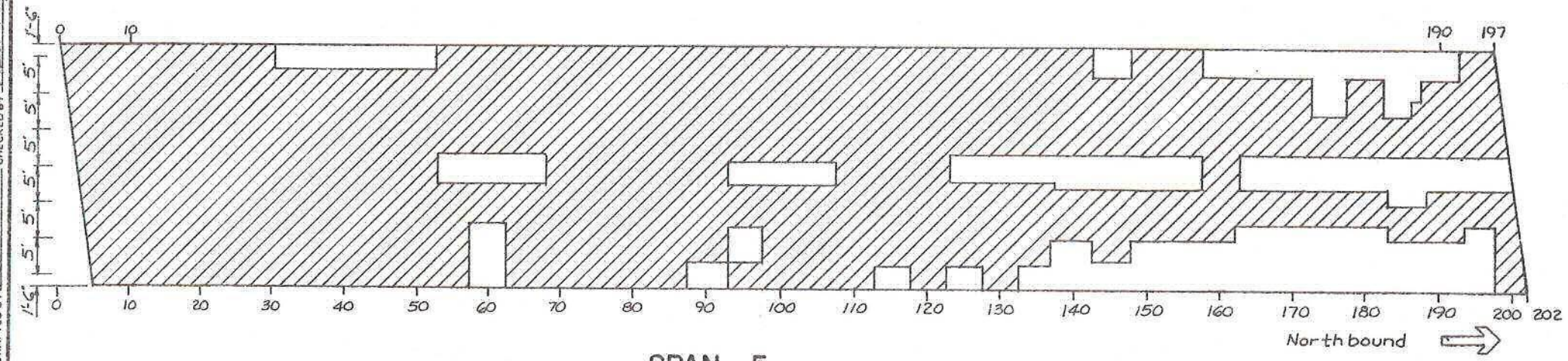

SPAN 5

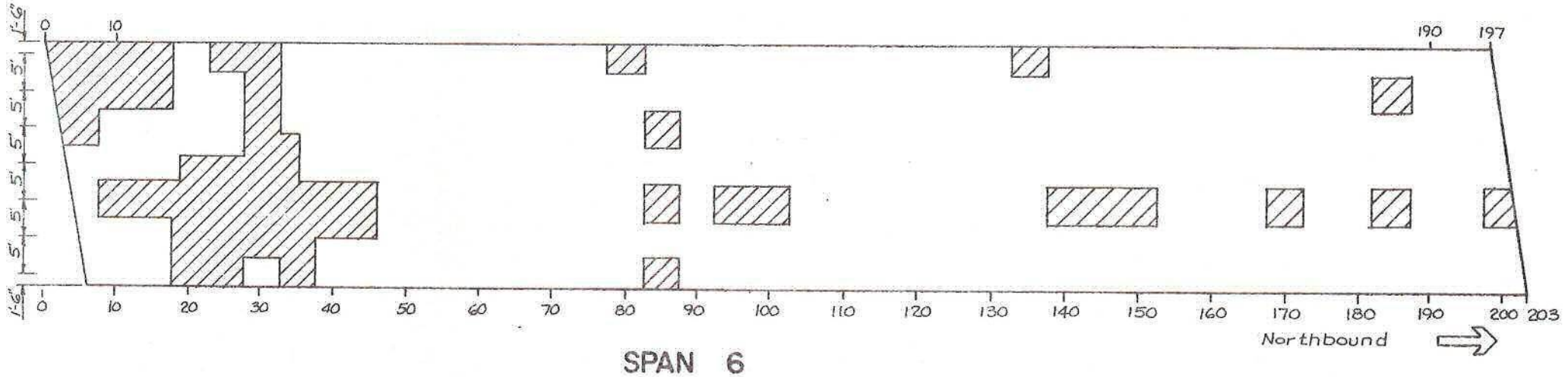

SPAN 6

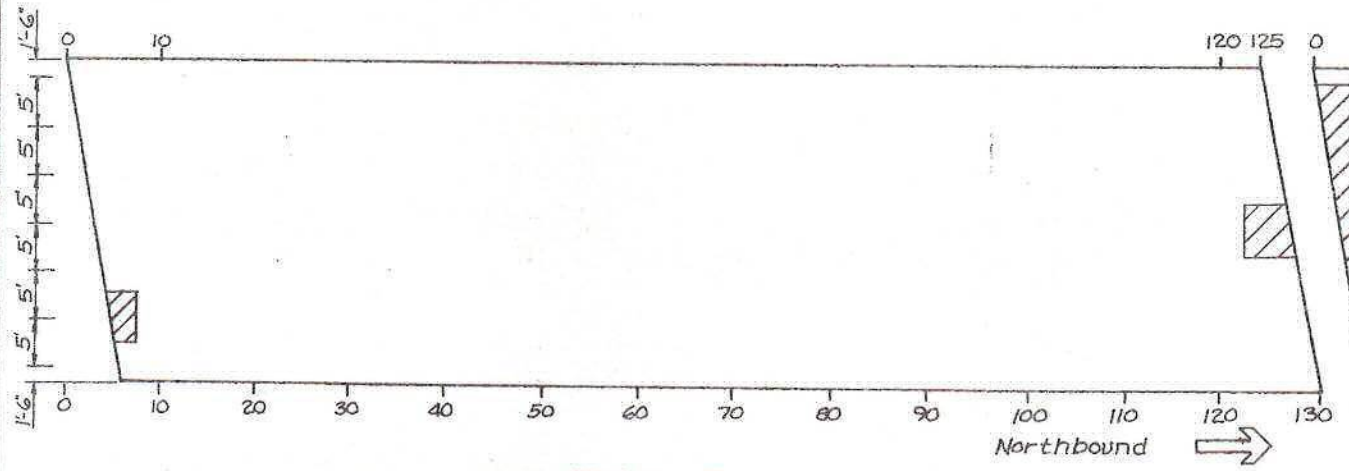

SPAN 7

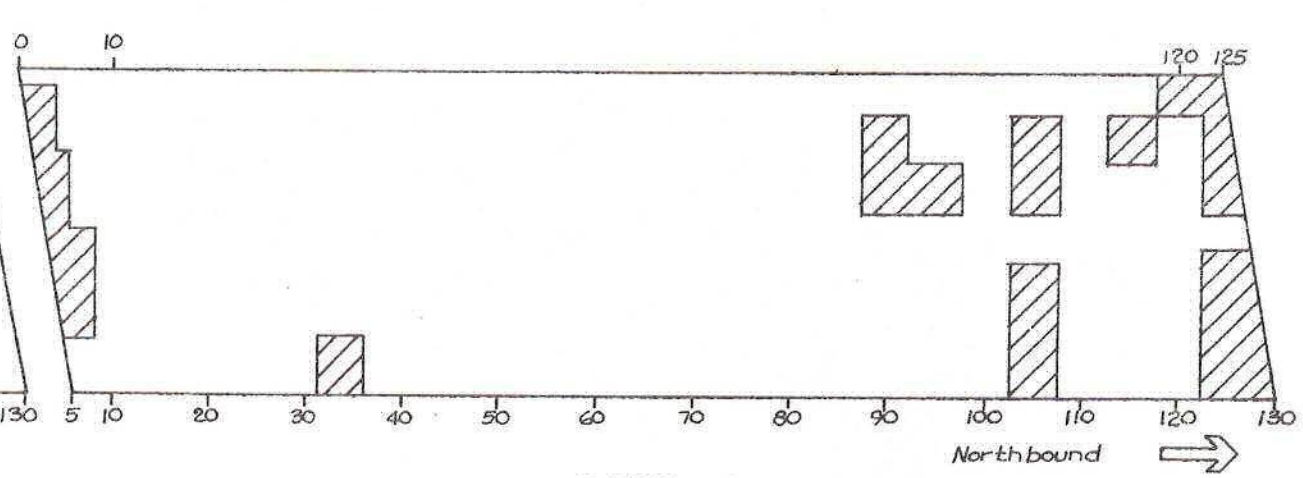

SPAN 8

N

Approximate Area for Exposing Reinforcing Bars, Item 579.02

AS - BUILT REVISIONS

SIGNATURE DATE

BIN 1093572 I-481 NORTHBOUND OVER CONRAIL

STATE OF NEW YORK
DEPARTMENT OF TRANSPORTATION

DRAWING No.	SCALE	DATE	REGION	SHEET NO.
ER-12			3	63

IN CHARGE OF Nick DeCicco DESIGNED BY Thomas A. Kings CHECKED BY Nick DeCicco ESTIMATED BY Thomas A. Kings CHECKED BY DRAFTED BY CHECKED BY DATE 1/24/85

D25143

FED. ROAD REG. NO.	STATE	FEDERAL AID PROJECT NO.	SHEET NO.
1	N.Y.	IR-481-(174) BHI 481-(174)	6

INTERSTATE ROUTE CONNECTION 57
BUTTERNUT INTERCHANGE - PHASE
BUTTERNUT INTERCHANGE TO COLLA
SH 70-7 ONONDAGA COUNTY

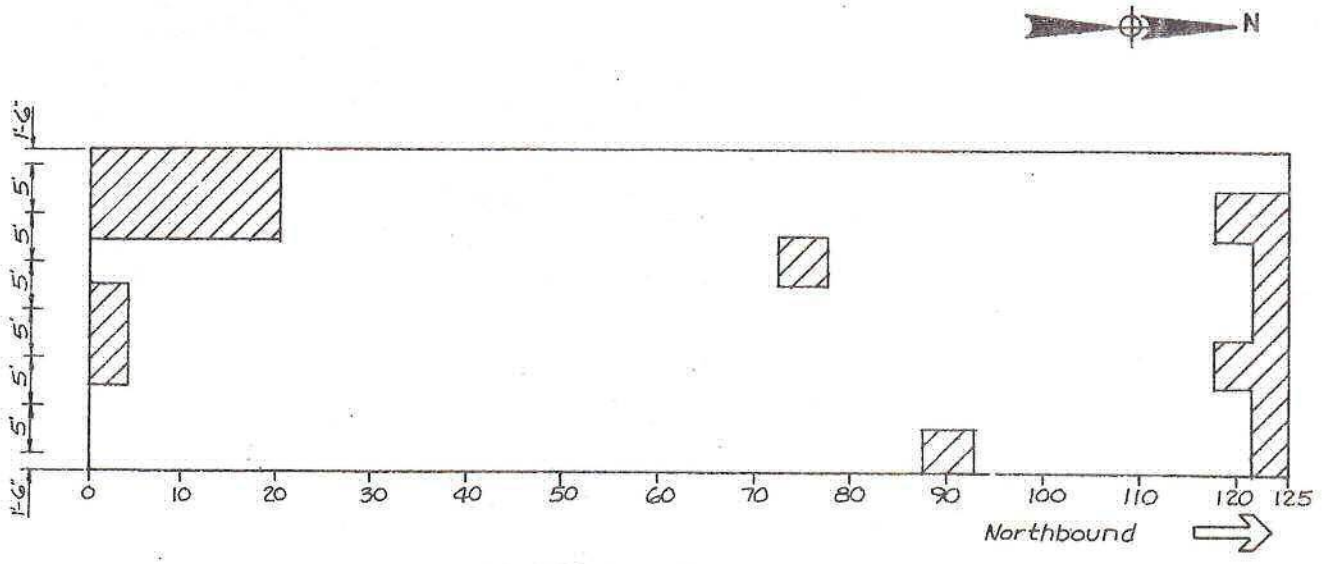

SPAN 15

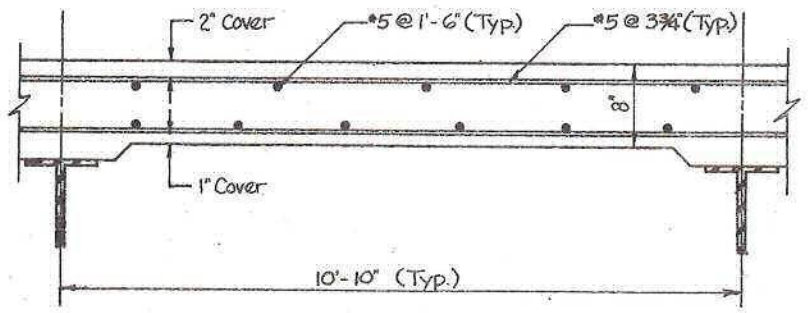

TOP BAR REINFORCEMENT
Not to scale

Approximate Area for Exposing Reinforcing Bars, Item 579.02

AS - BUILT REVISIONS

SIGNATURE DATE

BIN 1093572 I-481 NORTHBOU
OVER CONRAIL

STATE OF NEW YORK
DEPARTMENT OF TRANSPORTAT

DRAWING No.	SCALE	DATE	REGION
ER-14			3

DESIGNED BY _____ DRAFTED BY _____ CHECKED BY _____ DATE 1/24/85
ESTIMATED BY _____ CHECKED BY _____
IN CHARGE OF _____
HC 47-2 (5/76)

FED ROAD REG. NO.	STATE	CONTRACT NO.	SHEET NO.	TOTAL SHEETS
1	N.Y.	D259214	284	432

BRIDGE REHABILITATION PROJECT (ELEMENT SPECIFIC)
VARIOUS BRIDGES ON INTERSTATE 481
TOWNS OF DEWITT AND CICERO
ONONDAGA COUNTY
P.I.N. 305613 B.I.N. 1093571 & 1093572

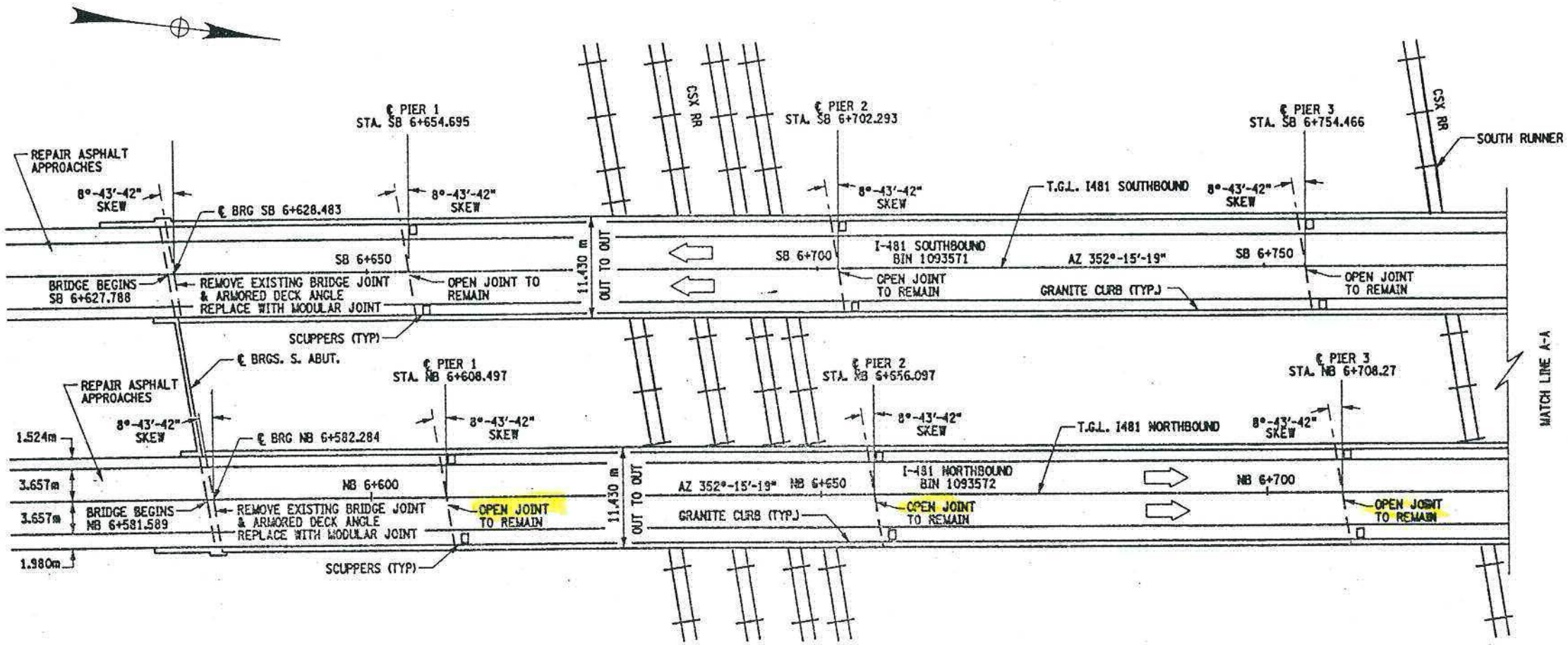

PLAN

SCALE 1:300

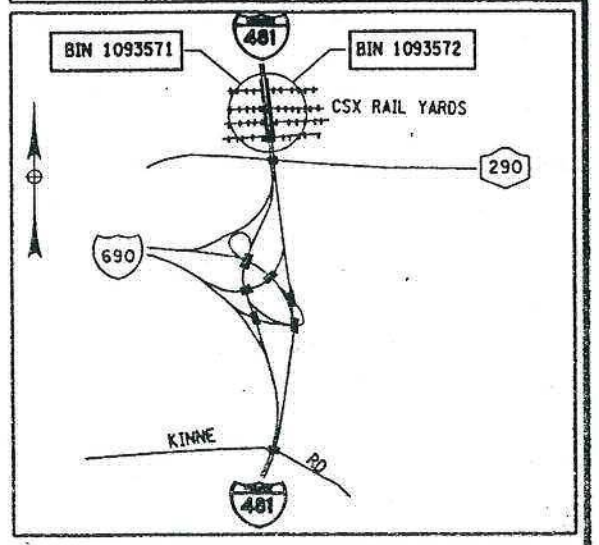

LOCATION MAP
NOT TO SCALE

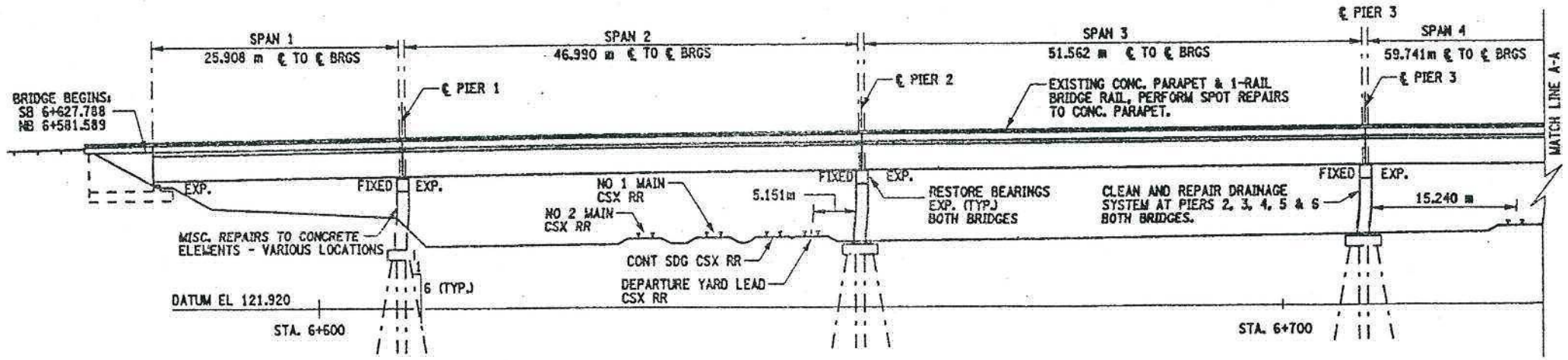

ELEVATION

SCALE 1:300

NOTES:

SEE DWG. GP17-2 FOR WORK TO BE DONE ON BIN 1093571 AND DWG. GP17-3 FOR WORK TO BE DONE ON BIN 1093572.

REFER TO DWG. NO. JT-3 AND JT-4 FOR BRIDGE JOINT INFORMATION.

ELECTRIC UTILITY IN THE VICINITY OF BRIDGES. SEE INFORMATION AVAILABLE TO BIDDERS FOR ADDITIONAL INFORMATION.

BIN 1093571 SOUTHBOUND
BIN 1093572 NORTHBOUND

ALL DIMENSIONS ARE IN m UNLESS OTHERWISE NOTED

AS BUILT REVISIONS

SIGNATURE DATE

INTERSTATE 481
OVER
CSX RAILROAD YARD

PLAN AND ELEVATION
1 OF 4

STATE OF NEW YORK
DEPARTMENT OF TRANSPORTATION

FILENAME	REGION	DATE	DRAWING NO.
305613AE.G1A	3	10/02	GP17-1

DESIGN SUPERVISOR ____ JOB MANAGER ____ DESIGNED BY ____ CHECKED BY ____ ESTIMATED BY ____ DRAFTED BY ____ CHECKED BY ____

FED ROAD REG. NO.	STATE	CONTRACT NO.	SHEET NO.	TOTAL SHEETS
1	N.Y.	D259214	285	432

BRIDGE REHABILITATION PROJECT (ELEMENT SPECIFIC)
VARIOUS BRIDGES ON INTERSTATE 481
TOWNS OF DEWITT AND CICERO
COUNTY OF ONONDAGA
P.I.N. 305613 | B.I.N. 1093571 & 1093572

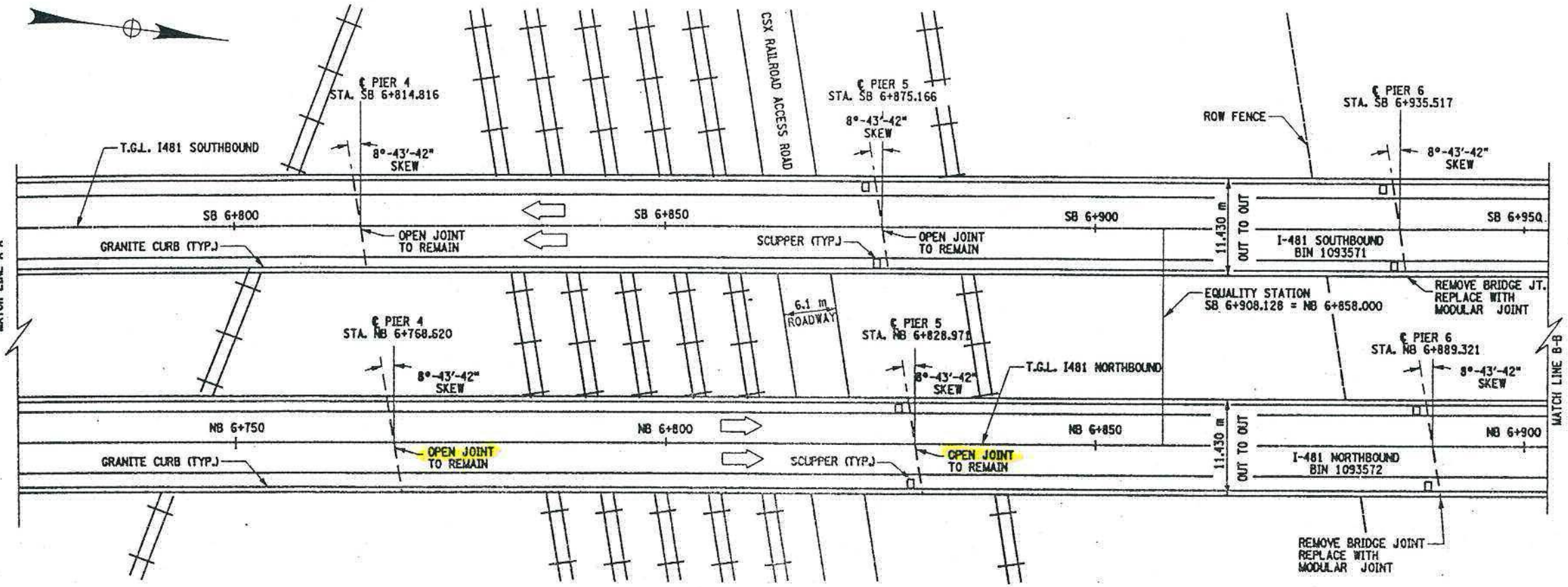

PLAN

SCALE 1:300

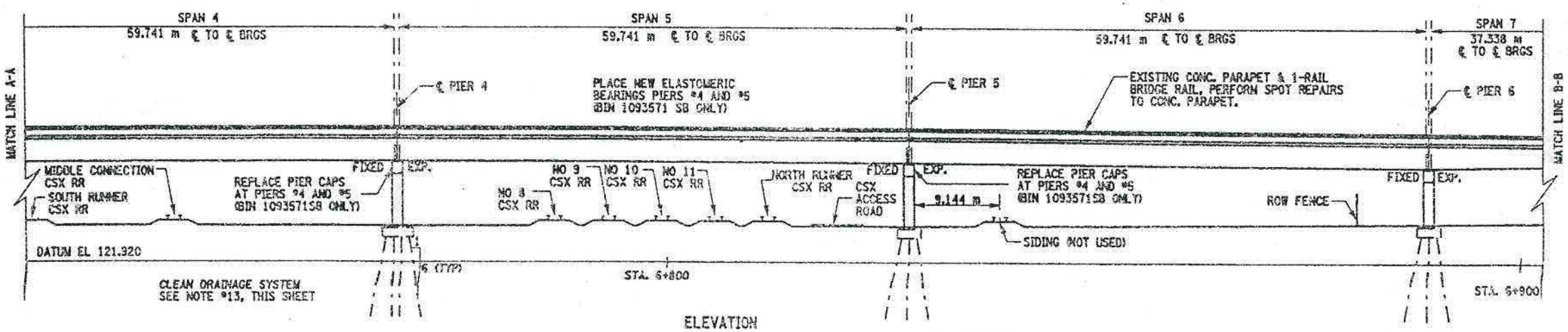

ELEVATION

SCALE 1:300

TRACK	VERTICAL CLEARANCE	HORIZONTAL CLEARANCE
	METERS	METERS
NO 2 MAIN	7.468	16.000
NO 1 MAIN	7.295	NA
CONT SDG	7.498	NA
DEPARTURE YARD LEAD	7.559	5.151
SOUTH RUNNER	8.169	15.240
MIDDLE CONNECTION	8.077	NA
NO 8	8.077	17.891
NO 9	8.077	NA
NO 10	8.077	NA
NO 11	8.169	NA
NORTH RUNNER	8.169	NA
SIDING	NA	9.144

NOTE: ALL DIMENSIONS SHOWN IN THIS TABLE ARE FIELD MEASUREMENTS.

WORK TO BE DONE ON BIN 1093571 SB: (NOT NECESSARILY IN THIS ORDER)

1. ESTABLISH MP&T SCHEME FOR STAGE CONSTRUCTION, (RR TRAFFIC CONTROL REQUIRED).
2. REMOVE EXISTING BRIDGE JOINTS AT THE BEGINNING ABUTMENT (TO INCLUDE ARMORING DECK ANGLE) AND PIERS #6, #7, #8, #10, #11 #12, #13 AND #14.
3. INSTALL NEW BRIDGE JOINTS, (MODULAR ONE-CELL JOINT SYSTEM).
4. INSTALL NEW COMPRESSION SEALS AT THE PARAPET SECTIONS OF THE EXISTING OPEN JOINTS, (PIERS #1, #2, #3, #4, #5 & #9). REPAIR EXISTING CONCRETE PARAPETS. OPEN JOINTS TO REMAIN.
5. REMOVE EXISTING ARMORING DECK ANGLE, AT END ABUTMENT.
6. REPAIR THE DECK AREA, WHERE ARMORING ANGLE WAS REMOVED.
7. PERFORM MINOR REPAIRS TO ASPHALT APPROACHES.
8. REPAIR THE CONCRETE ELEMENTS (I.E. PIER CAPS, PIER COLUMNS AND PIER PEDESTALS).
9. PERFORM BEARING RESTORATION TO ALL EXPANSION BEARINGS (TO INCLUDE RESETTING OF UNDER EXTENDED BEARINGS).
10. REMOVE PIER CAP #4 AND #5, TO INCLUDE PEDESTALS AND BEARINGS.
11. CONSTRUCT NEW PIER CAPS AND PEDESTALS AT PIERS #4 AND #5.
12. PLACE NEW BEARINGS AT PIERS #4 & #5, (ELASTOMERIC BEARINGS).
13. CLEAN AND MODIFY EXISTING CLOSED DRAINAGE SYSTEM AT PIERS #1, #2, #3, #4, #5 AND #9.
14. INSTALL SCUPPER DOWNSPOUT EXTENSIONS AT EXISTING SCUPPERS, SPANS #7 THRU #14.
15. PERFORM DRAINAGE IMPROVEMENTS AT RR YARD.
16. REPAIR EXISTING CONCRETE PARAPETS.

BIN 1093571 SOUTHBOUND
BIN 1093572 NORTHBOUND
ALL DIMENSIONS ARE IN m UNLESS OTHERWISE NOTED

AS BUILT REVISIONS

SIGNATURE DATE

INTERSTATE 481
OVER
CSX RAILROAD YARD
PLAN AND ELEVATION
2 OF 4

STATE OF NEW YORK
DEPARTMENT OF TRANSPORTATION

FILENAME	REGION	DATE	DRAWING NO.
305613AE.G1A	3	10/02	GP17-2

DESIGNED BY
DRAFTED BY
CHECKED BY
ESTIMATED BY
JOB MANAGER
DESIGN SUPERVISOR

FED ROAD REG. NO.	STATE	CONTRACT NO.	SHEET NO.	TOTAL SHEETS
1	N.Y.	D259214	286	432

BRIDGE REHABILITATION PROJECT (ELEMENT SPECIFIC)
VARIOUS BRIDGES ON INTERSTATE 481
TOWNS OF DEWITT AND CICERO
COUNTY OF ONONDAGA
P.I.N. 305613 B.I.N. 1093571 & 1093572

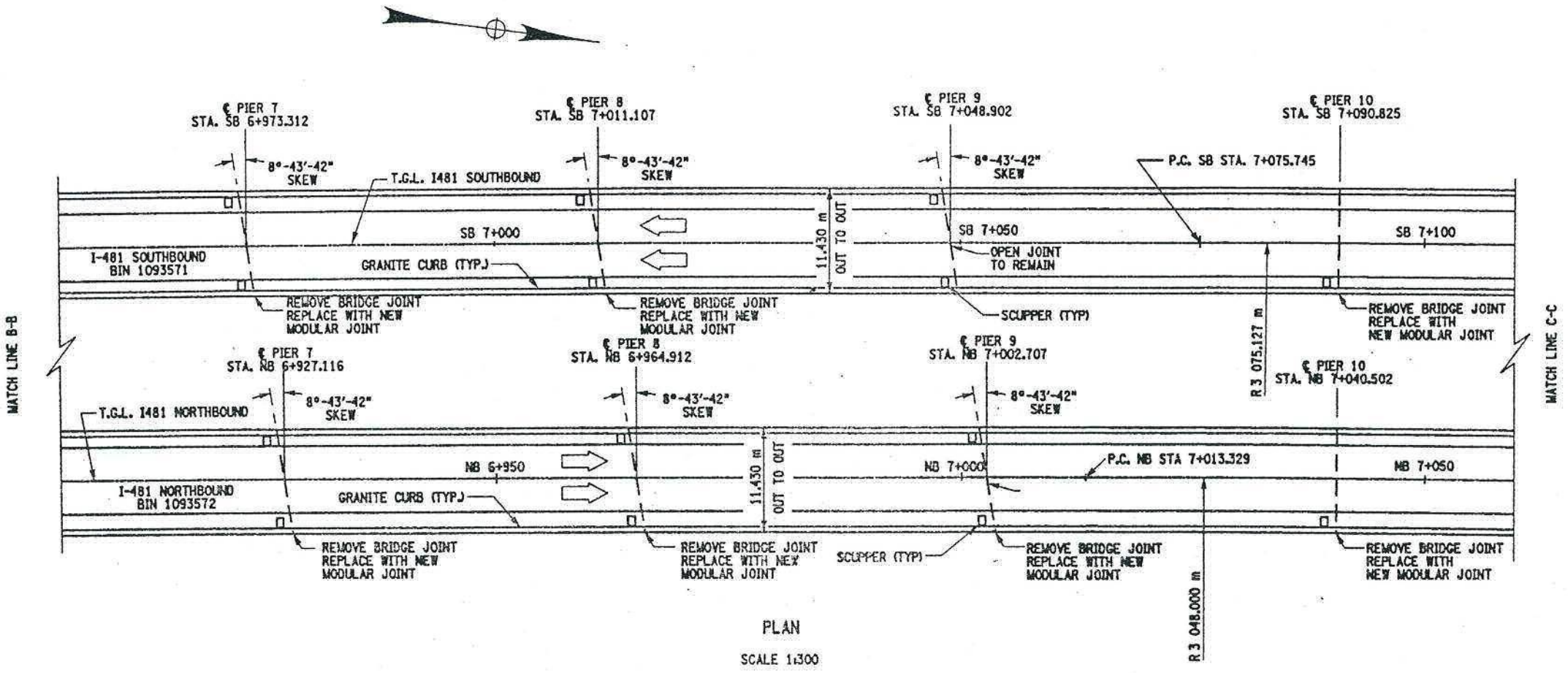

PLAN
SCALE 1:300

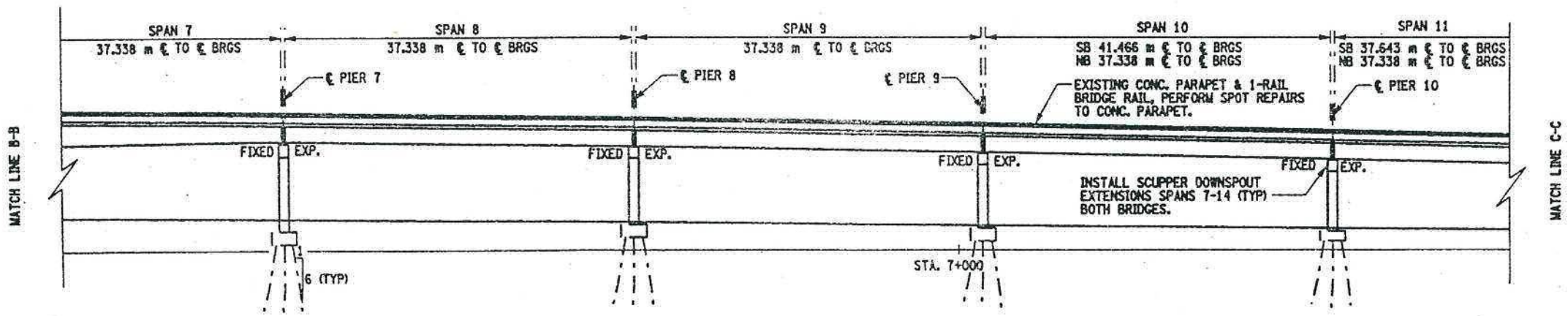

ELEVATION
SCALE 1:300

CURVE DATA	
SOUTHBOUND	NORTHBOUND
P.C.=7+075.745	P.C.=7+013.329
Δ=7°-04'-13"	Δ=7°-04'-13"
R=3075.127	R=3048.000
L=379.470	L=376.122
T=189.976	T=188.300

WORK TO BE DONE ON BIN 1093572, NB: (NOT NECESSARILY IN THIS ORDER)

1. ESTABLISH MP&T SCHEME FOR STAGE CONSTRUCTION, (RR TRAFFIC CONTROL REQUIRED).
2. REMOVE EXISTING BRIDGE JOINT AT BEGINNING ABUTMENT AND PIERS #6, #7, #8, #9, #10, #11, #12, #13 AND #14.
3. INSTALL NEW BRIDGE JOINTS, (MODULAR ONE-CELL JOINTS).
4. INSTALL NEW COMPRESSION SEALS AT THE PARAPET SECTIONS OF THE EXISTING OPEN JOINTS AT PIERS #1, #2, #3, #4 AND #5.
5. REPAIR EXISTING CONCRETE PARAPETS.
6. PERFORM REBAR EXPOSURE IN AREAS SHOWN ON PLANS, OR A.O.B.E. TO REPACE ASPHALT PATCHES, (SPOT REPAIRS TO BRIDGE DECK).
7. PLACE SLAB RECONSTRUCTION CONCRETE.
8. REMOVE EXISTING ARMORING DECK ANGLE, AT END ABUTMENT.
9. REPAIR THE BRIDGE DECK AREA AT THE END ABUTMENT, WHERE THE ARMORING DECK ANGLE WAS REMOVED.
10. PERFORM MINOR REPAIRS TO ASPHALT APPROACHES.
11. REPAIR CONCRETE ELEMENTS, (PIER CAPS, COLUMNS AND PEDESTALS).
12. PERFORM BEARING RESTORATION TO ALL EXPANSION BEARINGS (TO INCLUDE RESETTING OF UNDER EXTENDED BEARINGS).
13. CLEAN AND MODIFY EXISTING CLOSED DRAINAGE SYSTEMS AT PIERS #1, #2, #3, #4, #5 AND #6.
14. INSTALL SCUPPER DOWNSPOUT EXTENSIONS AT EXISTING SCUPPERS, SPANS #7 THRU #14.
15. PERFORM DRAINAGE IMPROVEMENTS AT RR YARD.

BIN 1093571 SOUTHBOUND
BIN 1093572 NORTHBOUND
ALL DIMENSIONS ARE IN m UNLESS OTHERWISE NOTED

AS BUILT REVISIONS

SIGNATURE DATE

INTERSTATE 481
OVER
CSX RAILROAD YARD
PLAN AND ELEVATION
3 OF 4

STATE OF NEW YORK
DEPARTMENT OF TRANSPORTATION

FILENAME	REGION	DATE	DRAWING NO.
305613AE.G1A	3	10/02	GP17-3

DESIGN SUPERVISOR ____ JOB MANAGER ____ DESIGNED BY ____ ESTIMATED BY ____ DRAFTED BY ____ CHECKED BY ____ CHECKED BY ____

FED ROAD REG. NO.	STATE	CONTRACT NO.	SHEET NO.	TOTAL SHEETS
1	N.Y.	D259214	287	432

BRIDGE REHABILITATION PROJECT (ELEMENT SPECIFIC)
VARIOUS BRIDGES ON INTERSTATE 481
TOWNS OF DEWITT AND CICERO
COUNTY OF ONONDAGA
P.I.N. 305613 | B.I.N. 1093571 & 1093572

DESIGN SUPERVISOR ____ JOB MANAGER ____ DESIGNED BY ____ ESTIMATED BY ____ DRAFTED BY ____ CHECKED BY ____ CHECKED BY ____

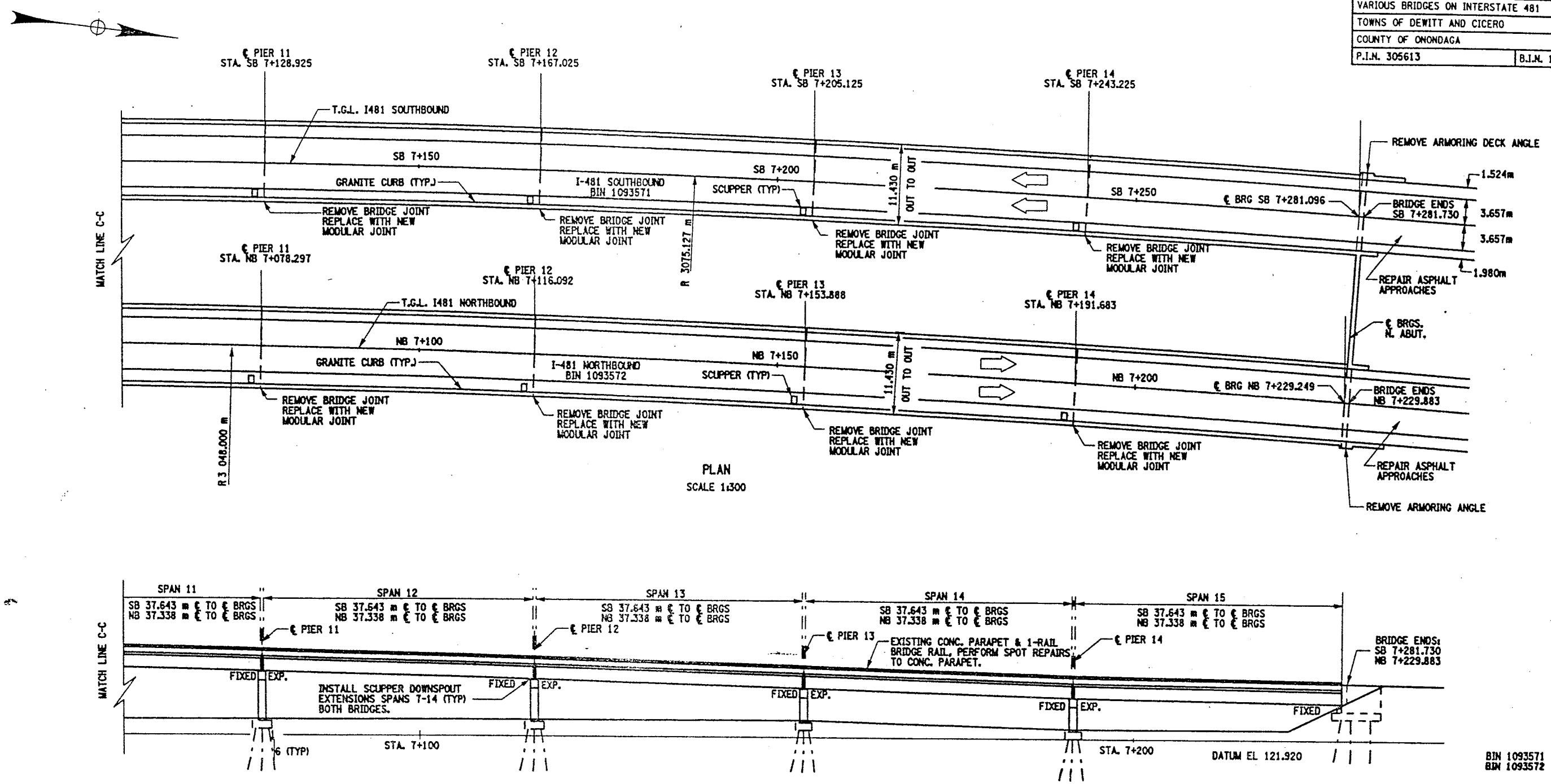

PLAN
SCALE 1:300

ELEVATION
SCALE 1:300

BIN 1093571 SOUTHBOUND
BIN 1093572 NORTHBOUND

ALL DIMENSIONS ARE IN m UNLESS OTHERWISE NOTED

AS BUILT REVISIONS

SIGNATURE ____ DATE ____

INTERSTATE 481
OVER
CSX RAILROAD YARD

PLAN AND ELEVATION
4 OF 4

STATE OF NEW YORK
DEPARTMENT OF TRANSPORTATION

FILENAME	REGION	DATE	DRAWING NO.
305613AE.G1A	3	10/02	GP17-4

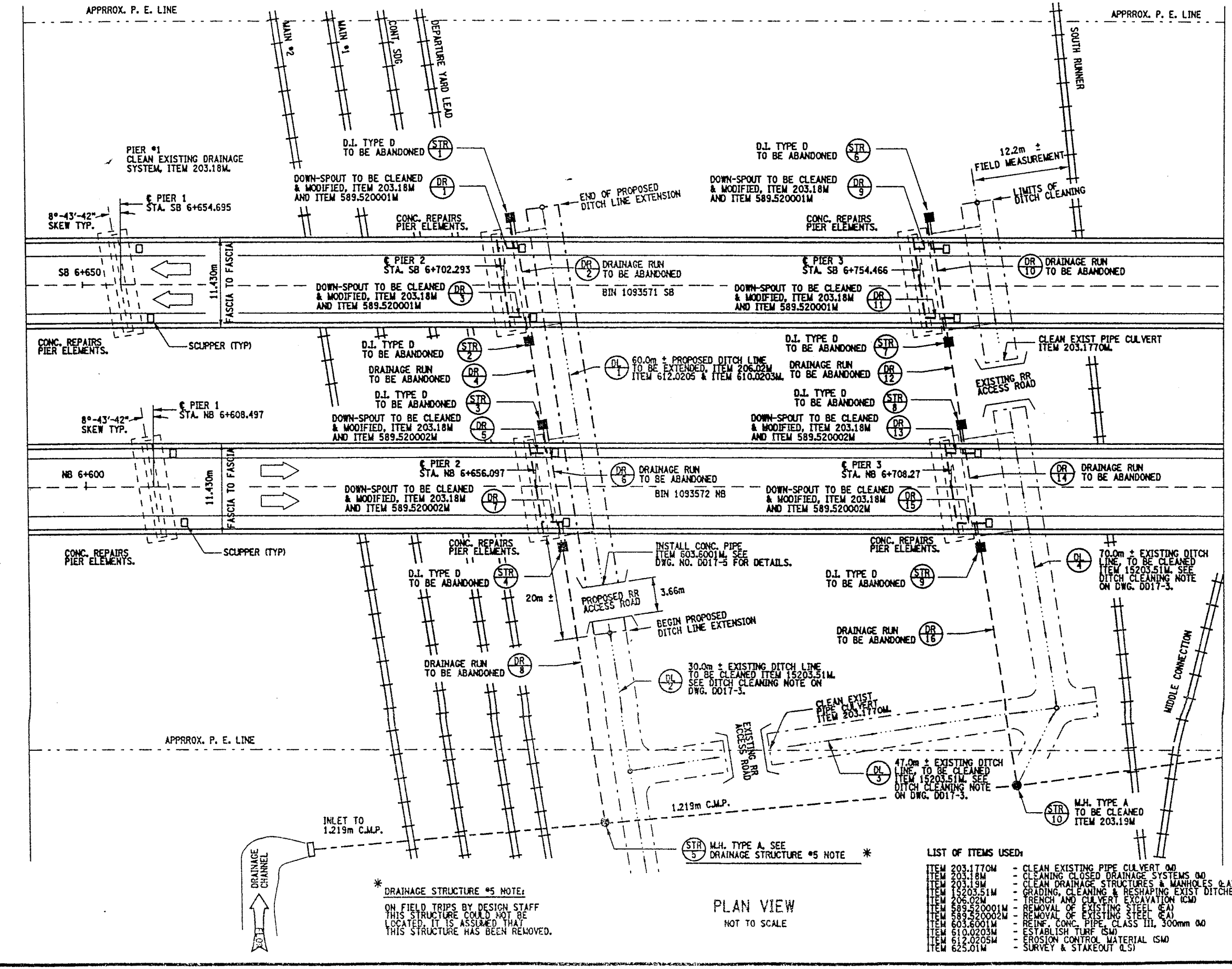

* DRAINAGE STRUCTURE #5 NOTE:

ON FIELD TRIPS BY DESIGN STAFF THIS STRUCTURE COULD NOT BE LOCATED. IT IS ASSUMED THAT THIS STRUCTURE HAS BEEN REMOVED.

PLAN VIEW

NOT TO SCALE

LIST OF ITEMS USED:

ITEM 203.177OM	- CLEAN EXISTING PIPE CULVERT (LF)
ITEM 203.18M	- CLEANING CLOSED DRAINAGE SYSTEMS (LF)
ITEM 203.19M	- CLEAN DRAINAGE STRUCTURES & MANHOLES (EA)
ITEM 15203.51M	- GRADING, CLEANING & RESHAPING EXIST DITCHES (LF)
ITEM 206.02M	- TRENCH AND CULVERT EXCAVATION (CM)
ITEM 589.520001M	- REMOVAL OF EXISTING STEEL (EA)
ITEM 589.520002M	- REMOVAL OF EXISTING STEEL (EA)
ITEM 603.6001M	- REINF. CONC. PIPE, CLASS III, 300mm (LF)
ITEM 610.0203M	- ESTABLISH TURF (SM)
ITEM 612.0205M	- EROSION CONTROL MATERIAL (SM)
ITEM 625.01M	- SURVEY & STAKEOUT (LS)

MATCH LINE A - A

FED ROAD REG. NO.	STATE	CONTRACT NO.	SHEET NO.	TOTAL SHEETS
1	N.Y.	D259214	289	432

BRIDGE REHABILITATION PROJECT (ELEMENT SPECIFIC)

VARIOUS BRIDGES ON INTERSTATE 481

TOWNS OF DEWITT AND CICERO

COUNTY OF ONONDAGA

P.I.N. 305613 | B.I.N. 1093571 & 1093572

GENERAL NOTES:

THE PROPOSED DRAINAGE WORK IS BASED ON DRAINAGE INFORMATION FROM ORIGINAL CONTRACT F.I.S.H. 70-7. REFER TO ORIGINAL CONTRACT PLANS FOR DETAILS OF EXISTING DRAINAGE STRUCTURES.

THE CONTRACTOR SHALL VERIFY THIS INFORMATION WITH FIELD SITE INSPECTIONS.

CONTRACTOR SHALL NOTE THAT ALL DRAINAGE SYSTEMS AND STRUCTURES SHALL BE CLEANED UNDER ITEMS 203.18M OR 203.19M.

THE EXACT PLACEMENT OF THE PROPOSED RR ACCESS ROAD (CONC. PIPE CULVERT) SHALL BE AT THE DISCRETION OF THE ENGINEER.

NO EXISTING SURVEY IS AVAILABLE, ITEM 625.01M "SURVEY & STAKEOUT" IS INCLUDED IN CONTRACT FOR ALL NECESSARY WORK, AS DIRECTED BY ENGINEER.

SEE DRAWING NO. DO17-3 FOR TABLE OF DRAINAGE WORK AND DITCH LINE WORK, TO BE DONE.

SEE DWG. NO. DO17-4 FOR DOWN-SPOUT MODIFICATION DETAILS.

SEE DWG. NO. GN-1 FOR SERIALIZED ITEM NOTES.

SEE DWG. NO. DO17-5 FOR PROPOSED CONC. PIPE AND MISCEL. DETAILS.

WORK TO BE DONE:

PIER #1 - CLEAN EXISTING DRAINAGE SYSTEM. PERFORM REPAIRS TO CONCRETE PIER ELEMENTS AND BEARING RESTORATION.

PIER #2 - DRAINAGE STRUCTURES AND DRAINAGE RUNS TO BE ABANDONED. MODIFY EXISTING DOWN-SPOUTS (REFER TO DRAWING NO. DO17-4 FOR DETAILS). CLEAN THE REMAINING DRAINAGE SYSTEM. THIS WORK SHALL INCLUDE EXTENSION OF THE EXISTING DITCH LINE AND INSTALLATION OF A CULVERT PIPE. ALSO CLEANING AND RESHAPING THE EXISTING DITCH LINE. PERFORM REPAIRS TO CONCRETE PIER ELEMENTS AND BEARING RESTORATION.

PIER #3 - DRAINAGE STRUCTURES AND DRAINAGE RUNS TO BE ABANDONED. MODIFY EXISTING DOWN-SPOUTS (REFER TO DRAWING NO. DO17-4 FOR DETAILS). CLEAN THE REMAINING DRAINAGE SYSTEM. THIS WORK SHALL ALSO INCLUDE CLEANING THE EXISTING DITCH LINE AND CLEANING EXISTING CULVERT PIPE. PERFORM REPAIRS TO CONCRETE PIER ELEMENTS AND BEARING RESTORATION.

PIER #4 - CLEAN EXISTING DRAINAGE SYSTEM TO INCLUDE ANY REPAIRS TO DRAINAGE STRUCTURES. NORTH BOUND, PERFORM REPAIRS TO CONCRETE PIER ELEMENTS AND BEARING RESTORATION. SOUTH BOUND, REPLACE PIER CAP.

PIER #5 - CLEAN EXISTING DRAINAGE SYSTEM TO INCLUDE ANY REPAIRS TO DRAINAGE STRUCTURES AND INSTALLATION OF A NEW OUTLET SECTION (405mm RCCP) NORTH BOUND, PERFORM REPAIRS TO CONCRETE PIER ELEMENTS AND BEARING RESTORATION. SOUTH BOUND, REPLACE PIER CAP.

PIER #6 (NB ONLY)- DRAINAGE STRUCTURES AND DRAINAGE RUNS TO BE ABANDONED. MODIFY EXISTING DOWN-SPOUTS (REFER TO DRAWING NO. DO17-4 FOR DETAILS). CLEAN REMAINING DRAINAGE SYSTEM. PERFORM REPAIRS TO CONCRETE PIER ELEMENTS AND BEARING RESTORATION. CONSTRUCT A SWALE TO DIRECT RUNOFF AWAY FROM PIER AND RR PROPERTY.

PIER #9 (SB ONLY) - CLEAN EXISTING DRAINAGE SYSTEM.

SEE DRAWING NO. GP17-2 AND GP17-3 FOR COMPLETE LISTING OF WORK TO BE DONE.

ALL DIMENSIONS ARE IN m UNLESS OTHERWISE NOTED

AS BUILT REVISIONS

SIGNATURE DATE

INTERSTATE 481
OVER
CSX RAILROAD YARD

DRAINAGE DETAILS

STATE OF NEW YORK
DEPARTMENT OF TRANSPORTATION

FILENAME	REGION	DATE	DRAWING NO.
305613AE.G1A	3	10/02	DO17-1

DESIGN SUPERVISOR ____ JOB MANAGER ____ DESIGNED BY ____ ESTIMATED BY ____ DRAFTED BY ____ CHECKED BY ____

FED ROAD REC. NO.	STATE	CONTRACT NO.	SHEET NO.	TOTAL SHEETS
1	N.Y.	D259214	290	432

BRIDGE REHABILITATION PROJECT (ELEMENT SPECIFIC)
VARIOUS BRIDGES ON INTERSTATE 481
TOWNS OF DEWITT AND CICERO
COUNTY OF ONONDAGA
P.I.N. 305613 | B.I.N. 1093571 & 1093572

NOTES:

THE PROPOSED DRAINAGE WORK IS BASED ON DRAINAGE INFORMATION FROM ORIGINAL CONTRACT F.I.S.H. 70-7.

THE CONTRACTOR SHALL VERIFY THIS INFORMATION WITH FIELD SITE INSPECTIONS.

SEE WORK TO BE DONE AND GENERAL NOTES ON DWG. NO. DD17-1.

SEE DWG. NO. DD17-3 FOR TABLE OF DRAINAGE WORK TO BE DONE.

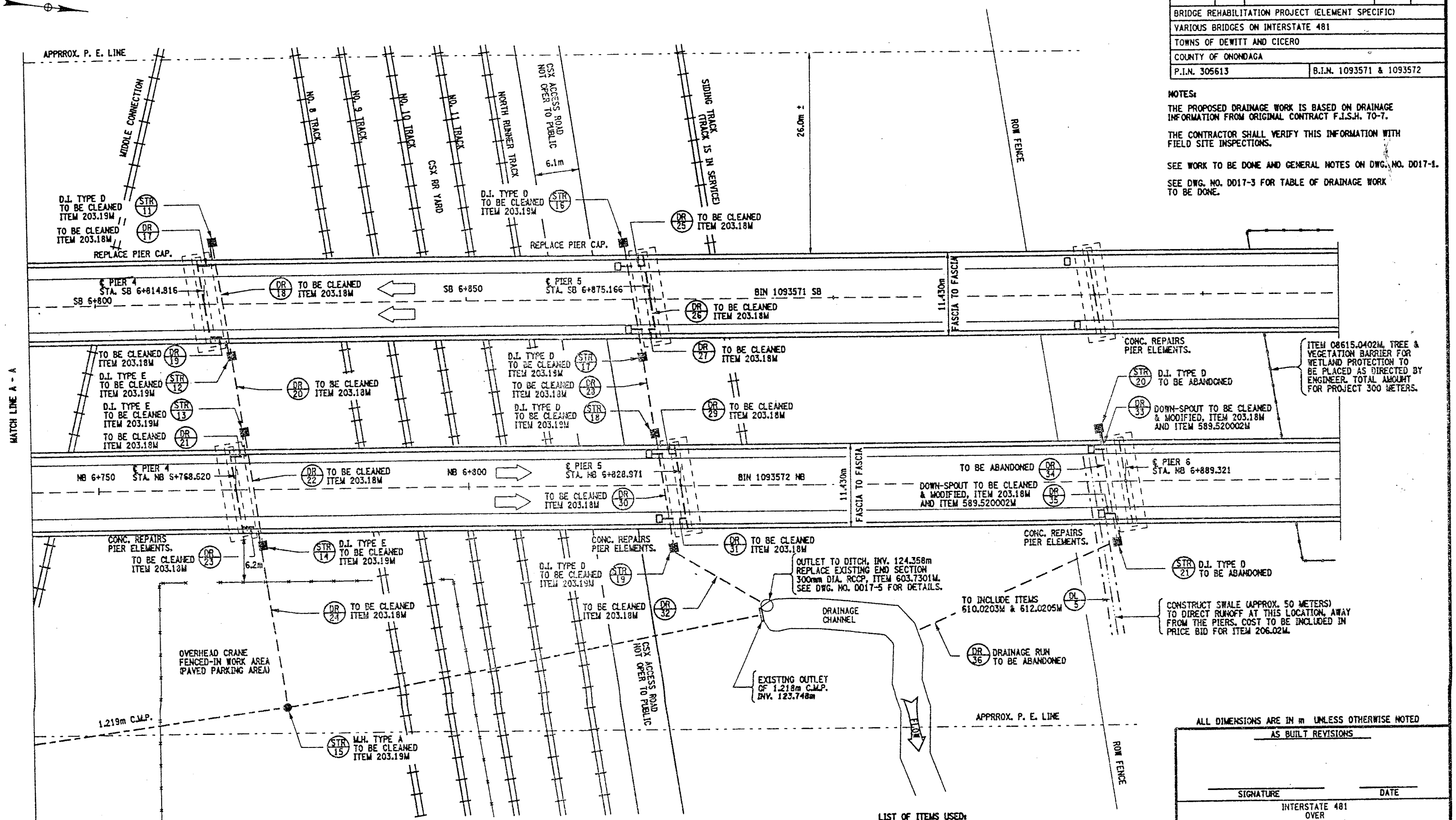

PLAN VIEW
NOT TO SCALE

LIST OF ITEMS USED:

ITEM 203.18M	- CLEANING CLOSED DRAINAGE SYSTEMS (M)
ITEM 203.19M	- CLEAN DRAINAGE STRUCTURES & MANHOLES (EA)
ITEM 206.02M	- TRENCH AND CULVERT EXCAVATION (CM)
ITEM 589.520002M	- REMOVAL OF EXISTING STEEL (EA)
ITEM 603.7301M	- REINF. CONC. PIPE END SECTION, 300mm (EA)
ITEM 610.0203M	- ESTABLISH TURF (SM)
ITEM 612.0205M	- EROSION CONTRAL MATERIAL (SM)
ITEM 08615.0402M	- TREE AND VEGTATION BARRIER (M)

ALL DIMENSIONS ARE IN m UNLESS OTHERWISE NOTED

AS BUILT REVISIONS

SIGNATURE _____ DATE _____

INTERSTATE 481
OVER
CSX RAILROAD YARD
DRAINAGE DETAILS

STATE OF NEW YORK
DEPARTMENT OF TRANSPORTATION

FILENAME	REGION	DATE	DRAWING NO.
305613AE.G1A	3	10/02	DD17-2

MATCH LINE A - A

DESIGN SUPERVISOR _____ JOB MANAGER _____ DESIGNED BY _____ CHECKED BY _____ DRAFTED BY _____ CHECKED BY _____ ESTIMATED BY _____

FED ROAD REG. NO.	STATE	CONTRACT NO.	SHEET NO.	TOTAL SHEETS
1	N.Y.	D259214	292	432

BRIDGE REHABILITATION PROJECT (ELEMENT SPECIFIC)
VARIOUS BRIDGES ON INTERSTATE 481
TOWNS OF DEWITT AND CICERO
ONONDAGA COUNTY
P.I.N. 305613 B.I.N. 1093571 & 1093572

DESIGNED BY ____ DRAFTED BY ____ ESTIMATED BY ____ CHECKED BY ____ JOB MANAGER ____ DESIGN SUPERVISOR ____

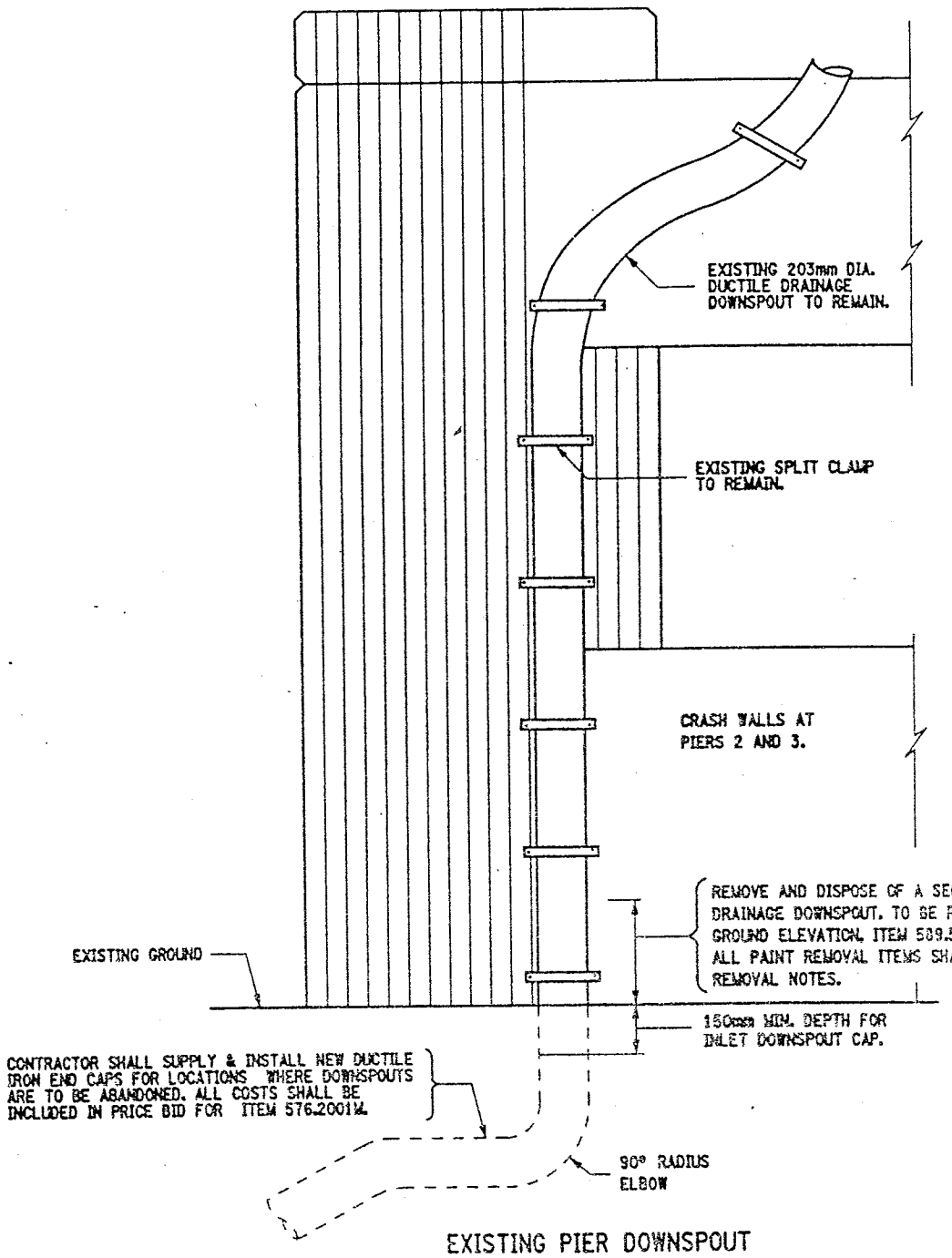

EXISTING PIER DOWNSPOUT

SCALE: 1 TO 10

PAINT REMOVAL NOTES:

PAINT REMOVAL WORK SHALL BE DONE IN ACCORDANCE WITH REQUIREMENTS OF SECTION 741 OF STANDARD SPECIF.

REMOVE EXISTING PAINT FROM SPECIFIED ELEMENTS, PRIOR TO ANY CUTTING OR WELDING.

PAINT SHALL BE REMOVED TO 100mm MIN. FROM THE PROPOSED WELD/CUT LOCATON.

IN CONJUNCTION WITH THE USE OF ITEM 16570.72M - LOCALIZED VACCUM CONTAINED CLEANING OF STRUCTURAL STEEL. ITEM 570.09NNNNM - ENVIRONMENTAL GROUND PROTECTION AND ITEM 571.01NNNNM - TREATMENT AND DISPOSAL OF PAINT REMOVAL WASTE, SHALL ALSO BE INCORPORATED DURING PAINT REMOVAL OPERATIONS, (SEE ITEM CLARIFICATION NOTE, THIS SHEET).

THIS PAINT REMOVAL OPERATION SHALL BE REGARDED AS "EXEMPT SMALL GENERATOR STATUS" AND ALL PROVISIONS OF PART 372, 6 NYCRR SHALL APPLY .

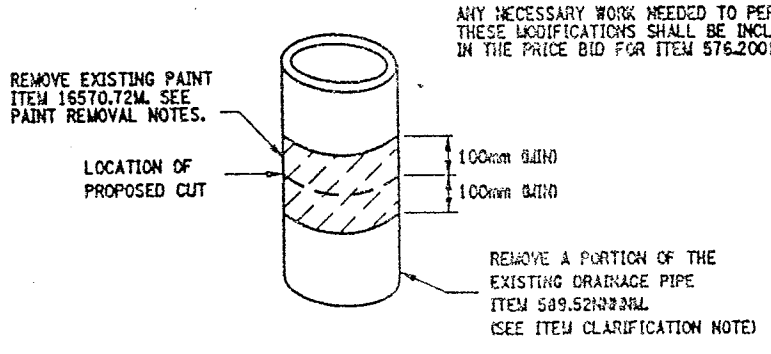

LIMITS OF PAINT REMOVAL

NOT TO SCALE

DOWNSPOUT MODIFICATION NOTES:

THE EXISTING DOWNSPOUTS SHALL BE MODIFIED AT THE FOLLOWING LOCATIONS:

PIER #2 NB AND SB	4 LOCATIONS
PIER #3 NB AND SB	4 LOCATIONS
PIER #6 NB	2 LOCTIONS
	10 LOCATIONS TOTAL

ANY NECESSARY WORK NEEDED TO PERFORM THESE MODIFICATIONS SHALL BE INCLUDED IN THE PRICE BID FOR ITEM 576.2001M.

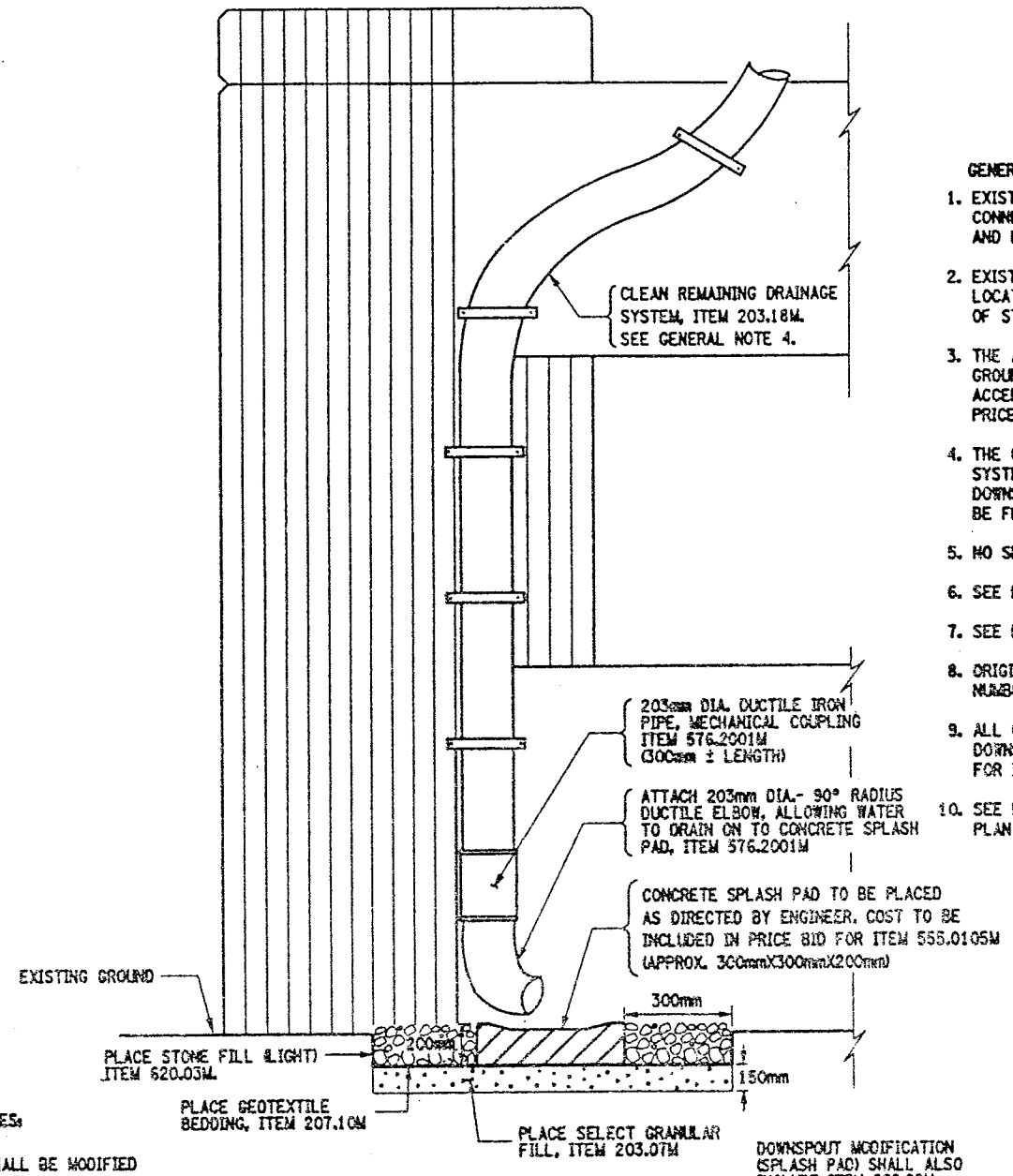

DOWNSPOUT MODIFICATION (SPLASH PAD) SHALL ALSO INCLUDE ITEM 206.02M.

ALL PROPOSED COUPLINGS AND ELBOWS SHALL BE SHOP PAINTED, TO BE INCLUDED IN ITEM 572.010001M (572.010002M).

PROPOSED PIER DOWNSPOUT

SCALE: 1 TO 10

ITEMS USED:

ITEM 203.07M	- SELECT GRANULAR FILL, (CM)
ITEM 203.18M	- CLEAN CLOSED DRAINAGE SYSTEMS (m)
ITEM 206.02M	- TRENCH & CULVERT EXCAV. (CM)
ITEM 207.10M	- GEOTEXTILE BEDDING, (SM)
ITEM 555.0105M	- CONCRETE FOR STRUCTURES, CLASS "A" (CM)
ITEM 570.090001M	- ENVIRONMENTAL GROUND PROTECTION (LS)
ITEM 570.090002M	- ENVIRONMENTAL GROUND PROTECTION (LS)
ITEM 16570.72M	- LOCALIZED VACUUM CONT. CLEANING STRUCT. STEEL (SM)
ITEM 571.010001M	- TREATMENT & DISPOSAL OF PAINT REMOVAL WASTE (CM)
ITEM 571.010002M	- TREATMENT & DISPOSAL OF PAINT REMOVAL WASTE (CM)
ITEM 572.010001M	- STRUCTURAL STEEL PAINT SYSTEM: SHOP APPLIED (SM)
ITEM 572.010002M	- STRUCTURAL STEEL PAINT SYSTEM: SHOP APPLIED (SM)
ITEM 589.520001M	- REMOVAL OF EXISITNG STEEL (EA)
ITEM 589.520002M	- REMOVAL OF EXISTING STEEL (EA)
ITEM 576.2001M	- DOWNSPOUT SYSTEM, DUCTILE IRON (m)
ITEM 620.03M	- STONE FILL, LIGHT (CM)

GENERAL NOTES:

1. EXISTING INLET DOWNSPOUT, ADJACENT DRAINAGE STRUCTURES AND CONNECTING DRAINAGE RUNS AT PIER #2 NB & SB, PIER #3 NB & SB AND PIER #6 NORTHBOUND ONLY, TO BE ABANDONED.
2. EXISTING DRAINAGE PIPE (DUCTILE IRON PIPE) SHALL BE CUT OFF AT LOCATION SHOWN OR AS DIRECTED BY ENGINEER. AS PER SECTION 589 OF STANDARD SPECIF. (SEE MODIFICATION NOTES).
3. THE ABANDONED INLET DOWNSPOUT PIPE (THE PORTION STILL IN THE GROUND) SHALL BE CAPPED WITH A DUCTILE IRON CAP, IN A MANNER ACCEPTABLE TO THE ENGINEER. ALL COSTS SHALL BE INCLUDED IN BID PRICE FOR ITEM 576.2001M.
4. THE CONTRACTOR SHALL NOTE THAT CLEANING THE DRAINAGE SYSTEM SHALL INCLUDE SCUPPERS, HOPPERS, TROUGHS AND DOWNSPOUTS. THE CLEANING OF THE DRAINAGE SYSTEM SHALL BE FROM THE BRIDGE DECK TO THE OUTLETTED DOWNSPOUTS.
5. NO SHOP DRAWINGS SHALL BE REQUIRED FOR DOWNSPOUT ELBOW.
6. SEE DRAWINGS NO. DD17-1 AND DD17-2 FOR MODIFICATION LOCATIONS.
7. SEE DRAWING NO. DD17-3 FOR TABLE OF DRAINAGE WORK TO BE DONE.
8. ORIGINAL CONTRACT PLANS F.I.S.H. 70-7 AND PREVIOUS CONTRACT NUMBER D251436.
9. ALL COSTS ASSOCIATED WITH THE INSTALLATION OF THE PROPOSED DOWNSPOUT ELBOW & COUPLING TO BE INCLUDED IN THE BID PRICE FOR ITEM 576.2001M.
10. SEE DRAWING NO. DD17-8 FOR MISC. DRAINAGE CLEANING DETAILS AND PLAN VIEW OF SPLASH PAD WITH STONE FILL.

ITEM CLARIFICATION NOTE:

ITEM 570.09NNNNM - ENVIRONMENTAL GROUND PROTECTION IS A SERIALIZED ITEM AND THE FOLLOWING PAY ITEMS SHALL BE INCORPORATED BY BRIDGE.

BIN 1093571 SB SHALL USE ITEM 570.090001M
BIN 1093572 NB SHALL USE ITEM 570.090002M

ITEM 572.01NNNNM - STRUCTURAL STEEL PAINT SYSTEM: SHOP APPLIED, IS A SERIALIZED ITEM AND THE FOLLOWING PAY ITEMS SHALL BE INCORPORATED BY BRIDGE.

BIN 1093571 SB SHALL USE ITEM 572.010001M
BIN 1093572 NB SHALL USE ITEM 572.010002M

ITEM 589.52NNNNM - REMOVAL OF EXISTING STEEL IS A SERIALIZED ITEM AND THE FOLLOWING PAY ITEMS SHALL BE INCORPORATED BY BRIDGE.

BIN 1093571 SB SHALL USE ITEM 589.520001M
BIN 1093572 NB SHALL USE ITEM 589.520002M

ITEM 571.01NNNNM - TREATMENT AND DISPOSAL OF PAINT REMOVAL WASTE, IS A SERIALIZED ITEM AND THE FOLLOWING PAY ITEMS SHALL BE INCORPORATED BY BRIDGE.

BIN 1093571 SB SHALL USE ITEM 571.010001M
BIN 1093572 NB SHALL USE ITEM 571.010002M

ALL DIMENSIONS ARE IN m UNLESS OTHERWISE NOTED

AS BUILT REVISIONS

SIGNATURE ____ DATE ____

INTERSTATE 481 NB AND SB
OVER
CSX RAILROAD YARD

MODIFICATION OF PIER DOWNSPOUTS

STATE OF NEW YORK
DEPARTMENT OF TRANSPORTATION

FILENAME	REGION	DATE	DRAWING NO.
305613AE.D1A	3	10/02	DD17-4

FED ROAD REG. NO.	STATE	CONTRACT NO.	SHEET NO.	TOTAL SHEETS
1	N.Y.	D259214	293	432

BRIDGE REHABILITATION PROJECT (ELEMENT SPECIFIC)

VARIOUS BRIDGES ON INTERSTATE 481

TOWNS OF DEWITT AND CICERO

ONONDAGA COUNTY

P.I.N. 305613 | B.I.N. 1093571 & 1093572

CHECKED BY ____ DRAFTED BY ____ ESTIMATED BY ____ DESIGNED BY ____ JOB MANAGER ____ DESIGN SUPERVISOR ____

TYPICAL DITCH LINE NOTES:

1) SEE TABLE OF DITCH LINES DWG NO. D017-3.

2) DIMENSIONS SHOWN ARE FOR ROUGH CALCULATIONS.

3) ITEMS 610.0203M AND ITEM 612.0205M ARE TO BE INCLUDE AT ALL LOCATIONS WHERE ITEM 15203.51M - CLEANING EXISTING DITCH LINES IS USED.

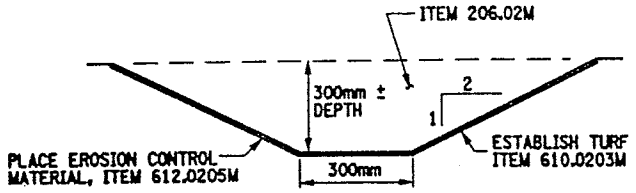

TYPICAL DITCH LINE

DITCH LINE EXTENSION AT PIER #2

NOT TO SCALE

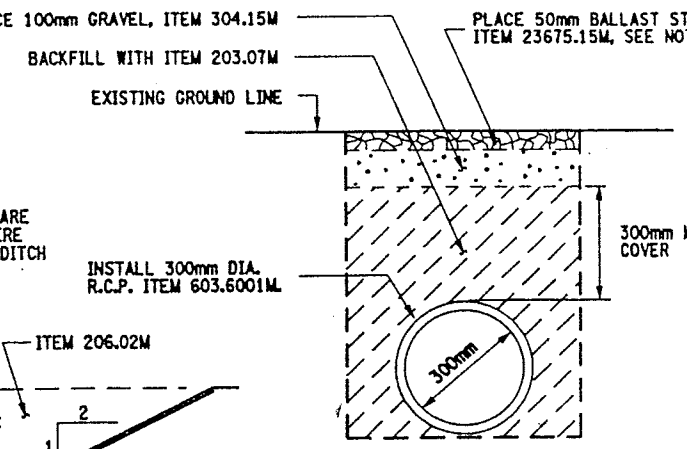

PROPOSED CONCRETE PIPE SECTION X-X

NOT TO SCALE

CULVERT PIPE NOTES:

1) EXTEND EXISTING DITCH LINE FROM ITS CURRENT LOCATION (SEE DWG. NO. D017-1) APPROXIMATELY 20 METER EAST OF PIER #2. TO 5 METERS BEYOND PIER #2, WEST SIDE. THE COST TO BE PAID UNDER ITEM 206.02M. REFER TO "TABLE OF DITCH LINES" DWG. NO. D017-3 FOR DITCH LINE NUMBER #1.

2) INSTALL PIPE CULVERT TO PROVIDE RAILROAD (CSX) ACCESS TO PIER 2. THE EXACT LOCATION OF THE PROPOSED CULVERT SHALL BE DETERMINED BY THE ENGINEER.

3) THE PROPOSED CULVERT PIPE SLOPE TO MATCH THE SLOPE OF THE EXISTING DITCH LINE. NOTE, NO EXISTING SURVEY AVAILABLE, ITEM 625.01M, "SURVEY & STAKEOUT" IS INCLUDED IN CONTRACT. NO PROPOSED INVERT ELEVATIONS GIVEN.

4) REFER TO NYS STANDARD SHEETS M203-4, M203-5 M203-6R1 AND M603-1.

5) NO LEAKAGE TEST REQUIRED.

6) FINISHED GRADE AT PROPOSED CULVERT INSTALLATION PLACEMENT OF ITEM 23675.15M, SHALL BE APPROVED BY CSXT DISTRICT ENGINEER. IF THIS MATERIAL DOES NOT SATISFY THE RAILROAD REQUIREMENTS FOR "APPROVED RAILROAD BALLAST STONE", THEN THE APPROPRIATE MATERIAL SHALL BE SUBSTITUTED FOR ITEM 23675.15M AT NO ADDITIONAL COST TO THE STATE.

7) THE CLASS & SIZE REQUIREMENTS FOR THE BALLAST STONE ITEM 23675.15M, SHALL BE DETERMINED BY THE ENGINEER.

8) INSTALLATION OF R.C.P. END-SECTIONS SHALL INCLUDE STONE FILL, ITEM 620.03M. (PLACED AT INLET & OUTLET OF RCP END- SECTIONS, AOBE).

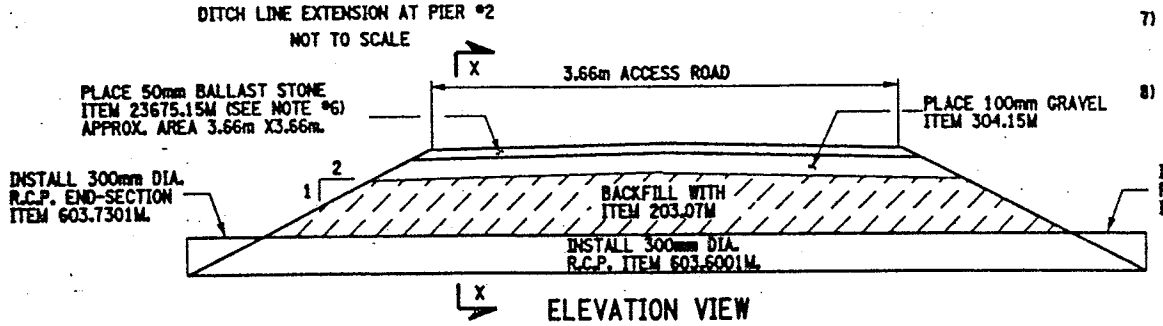

ELEVATION VIEW

NOT TO SCALE

ITEMS USED:

ITEM 203.03M - EMBANKMENT IN PLACE (CM)
ITEM 203.07M - SELECT GRANULAR FILL (CM)
ITEM 206.02M - TRENCH & CULVERT EXCAVATION (CM)
ITEM 304.15M - SUBBASE COURSE, OPTIONAL (CM)
ITEM 603.6001M - REINFORCED CONCRETE PIPE CLASS III (M)
ITEM 603.7301M - REINFORCED CONCRETE PIPE END SECTION (EACH)
ITEM 610.0203M - ESTABLISHING TURF (SM)
ITEM 612.0205M - EROSION CONTROL MATERIAL, CLASS II TYPE B (SM)
ITEM 620.03M - STONE FILL, LIGHT, (CM)
ITEM 625.01M - SURVEY & STAKEOUT (L.S.)
ITEM 23675.15M - FURNISH AND PLACE STONE BALLAST SURFACING COURSE (MT)

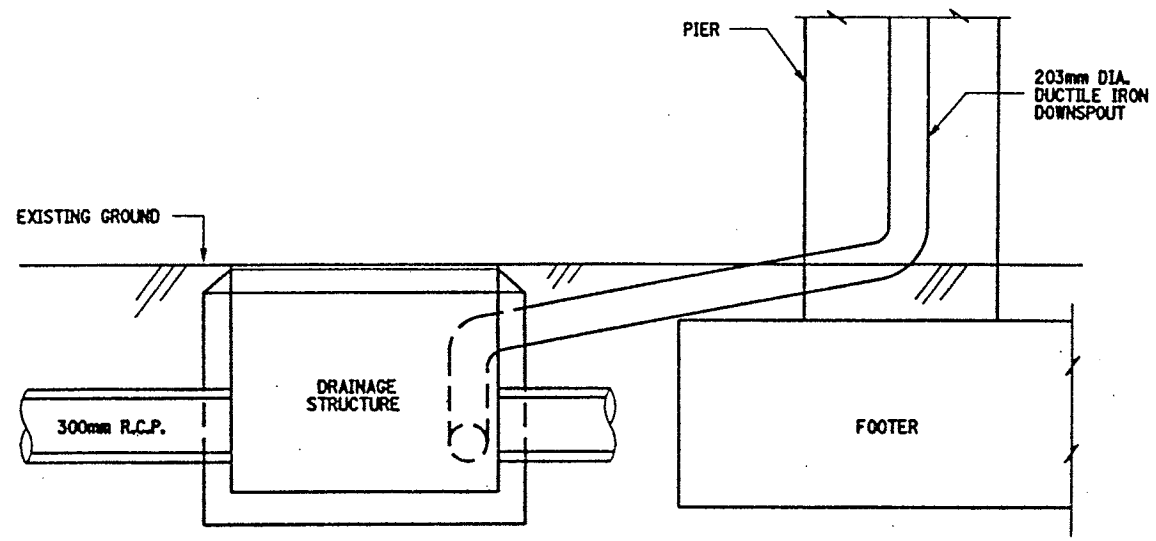

TYPICAL ELEVATION VIEW
DRAINAGE STRUCTURES ADJACENT TO PIERS (RR YARD).

NOT TO SCALE

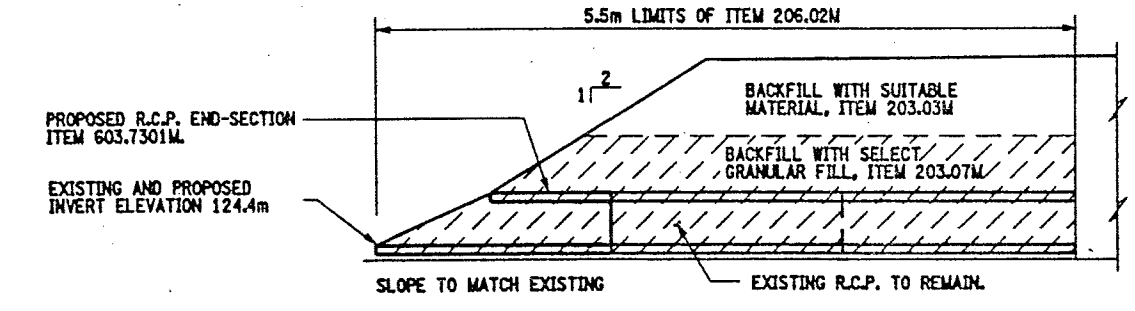

PROPOSED CONCRETE END-SECTION
SECTION VIEW

(DRAINAGE RUN #32)

NOT TO SCALE

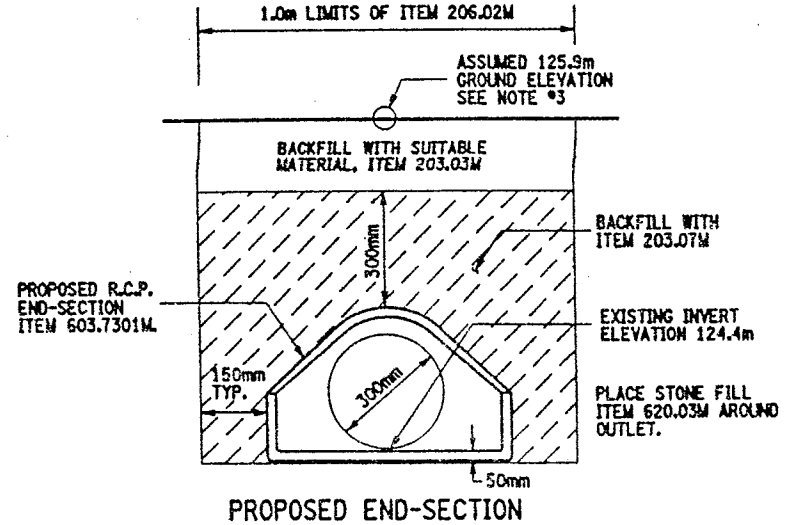

PROPOSED END-SECTION
END VIEW

NOT TO SCALE

END SECTION NOTES:

1) AT THE OUTLET OF DRAINAGE RUN #32 (SEE DWG. NO. D017-2) REMOVE EXISTING R.C.P. END-SECTION AND INSTALL A NEW CONCRETE PIPE END-SECTION, ITEM 603.7301M.

2) ANCHORING OF THE PROPOSED END-SECTION SHALL BE AS PER SECTION 603-3.06 OF STANDARD SPCIFICATIONS AND TO THE SATISFACTION OF THE ENGINEER. COST BE INCLUDED IN THE BID PRICE FOR ITEM 603.7301M.

3) THE ASSUMED GROUND ELEVATION IS TAKEN FROM THE DRAINAGE STRUCTURE TABLE ON DRAWING NO. D017-3 USING STRUCTURE #19 EXISTING T.G. ELEVATION. CONTRACTOR SHALL VERIFY ALL ELEVATIONS, ITEM 625.01M.

4) REFER TO NYS STANDARD SHEET M603-1.

5) INSTALLATION OF R.C.P. END-SECTION SHALL INCLUDE STONE FILL, ITEM 620.03M. (PLACED A.O.B.E.)

DRAINAGE STRUCTURE NOTES:

1) SEE DRAWING NO. D017-1 & D017-2 FOR DRAINAGE STRUCTURE LOCATIONS.

2) SEE DRAWING NO. D017-3 FOR TABLE OF DRAINAGE STRUCTURES, TO BE CLEANED OR ABANDONED.

3) REFER TO DRAWING NO. D017-4 FOR MODIFICATION OF DOWNSPOUT DETAILS.

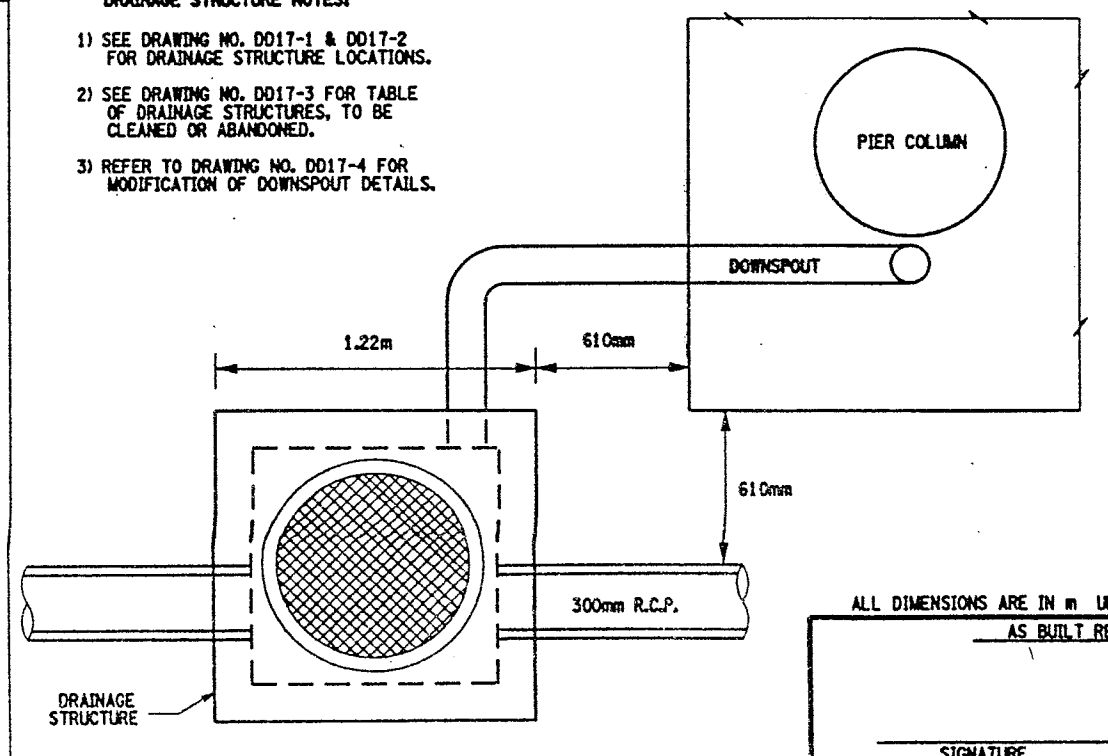

TYPICAL PLAN VIEW
DRAINAGE STRUCTURES ADJACENT TO PIERS (RR YARD).

NOT TO SCALE

ALL DIMENSIONS ARE IN m UNLESS OTHERWISE NOTED

AS BUILT REVISIONS

SIGNATURE ____ DATE ____

INTERSTATE 481 NB AND SB
OVER
CSX RAILROAD YARD

MISCELLANEOUS DETAILS

STATE OF NEW YORK
DEPARTMENT OF TRANSPORTATION

FILENAME	REGION	DATE	DRAWING NO.
305613AE.D1A	3	10/02	D017-5

FED ROAD REG. NO.	STATE	CONTRACT NO.	SHEET NO.	TOTAL SHEETS
1	N.Y.	D259214	297	432

BRIDGE REHABILITATION PROJECT (ELEMENT SPECIFIC)
VARIOUS BRIDGES ON INTERSTATE 481
TOWNS OF DEWITT AND CICERO
ONONDAGA COUNTY
P.I.N. 305613 B.I.N. 1093571

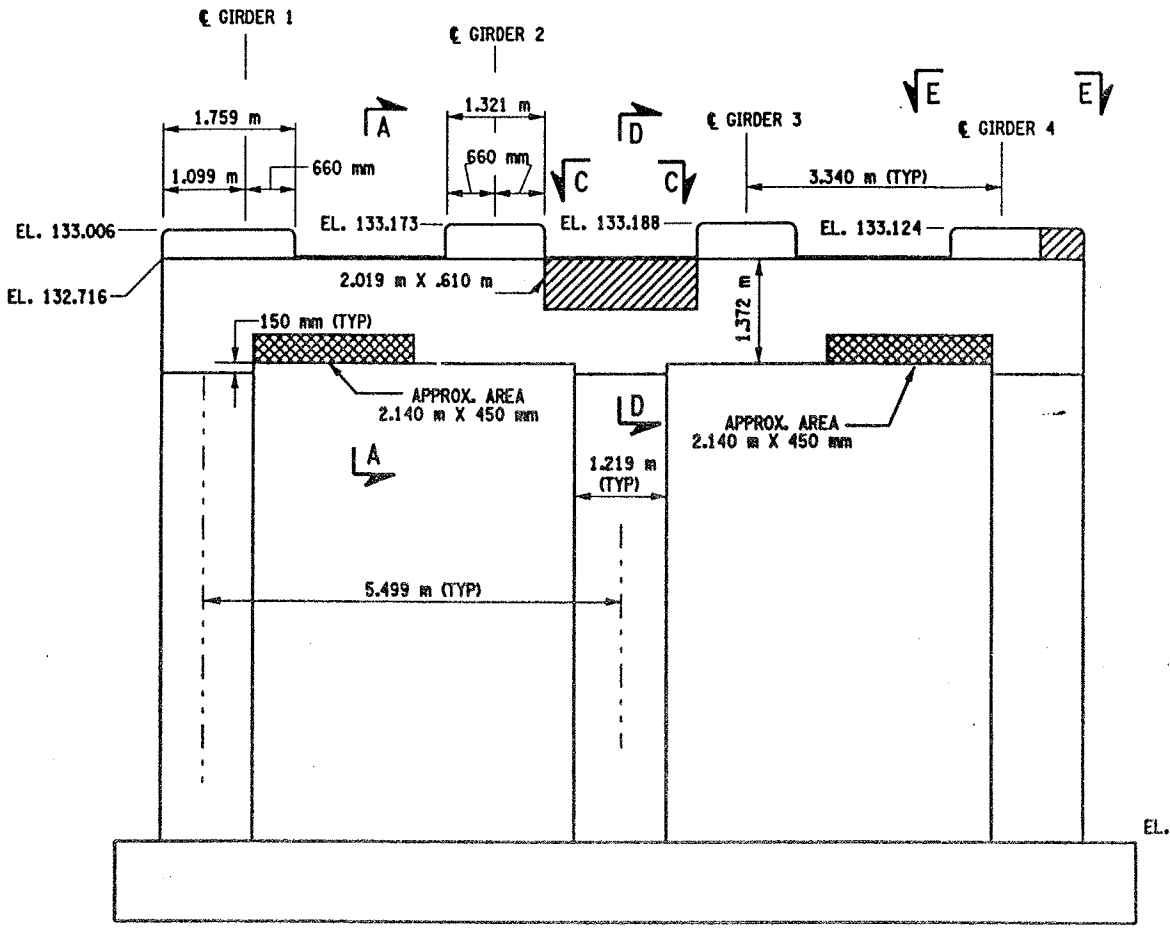

PIER 1 - FRONT FACE (LOOKING NORTH)
BIN 1093571
SCALE: 1 TO 50

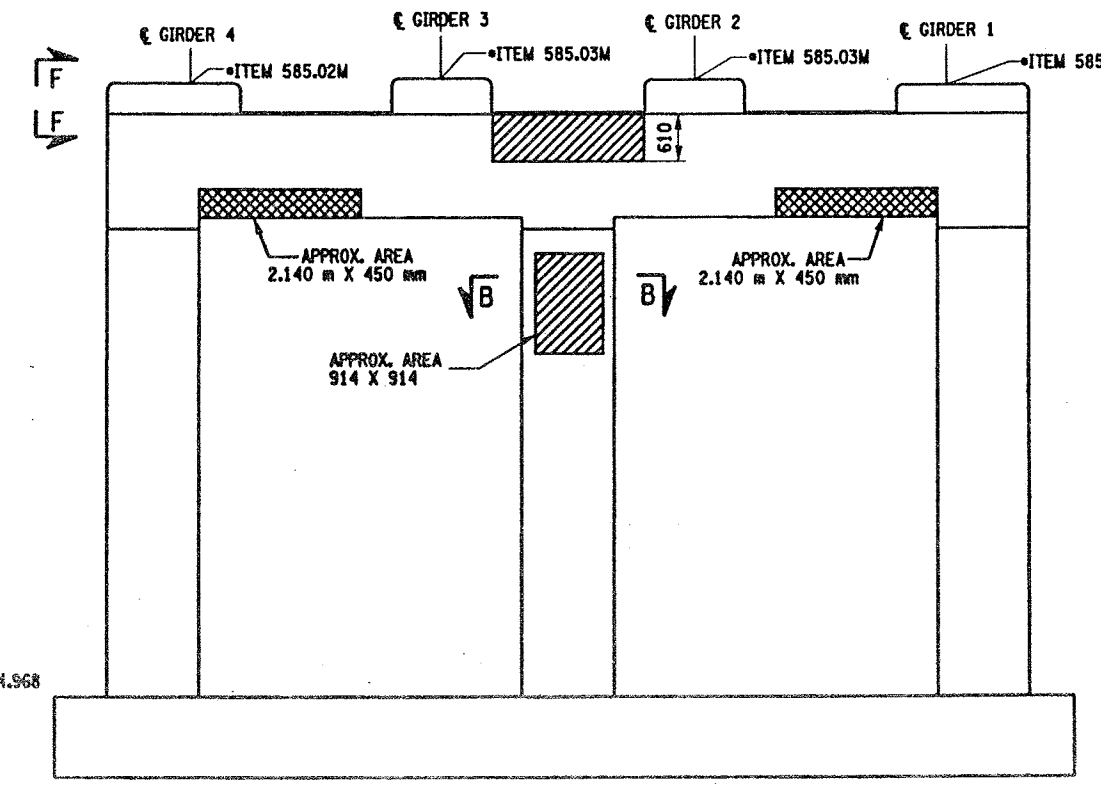

PIER 1- BACK FACE (LOOKING SOUTH)
BIN 1093571
SCALE: 1 TO 50

NOTES:

1. ALL REINFORCEMENT TO REMAIN.
2. RESTORE TO ORIGINAL DIMENSIONS.
3. PEDESTALS NUMERICALLY NUMBERED FROM WEST TO EAST.
4. FOR THE CONCRETE REPAIR AREAS, THE CONCRETE SHALL BE REMOVED TO AT LEAST 40mm MIN. BEYOND THE ENCOUNTERED REINFORCEMENT AND TO SOUND CONCRETE, A.O.B.E.
5. ELEVATIONS SHOWN ARE FROM ORIGINAL CONTRACT PLANS F.I.S.H. 70-7 AND ARE FOR REFERENCE ONLY.
6. REMOVAL DIMENSIONS SHOWN ON PLANS ARE ESTIMATED AND SHALL BE FIELD VERIFIED BY THE CONTRACTOR PRIOR TO BEGINNING OF REMOVAL OPERATIONS A.O.B.E.
7. PERFORM BEARING RESTORATION TO ALL EXPANSION BEARINGS (TO INCLUDE RESETTING OF UNDEREXTENDED OR OVEREXTENDED BEARINGS). SEE DWG. BR-10 & BR-11 FOR BEARING RESTORATION DETAILS.
8. SEE DWG. PR17-2S FOR SECTIONS A-A, B-B, D-D, E-E AND F-F.
9. ALL CONCRETE REMOVAL SHALL BE SAWCUT TO PRODUCE NEAT REMOVAL LINES. COST TO BE INCLUDED IN THE PRICE BID FOR ITEM 582.05M AND ITEM 582.07M.
10. CONTRACTOR SHALL REMOVE DEBRIS FROM TOP OF PEDESTALS AND TOP OF CAP BEAM. COST TO BE INCLUDED IN THE PRICE BID FOR VARIOUS OTHER ITEMS OF CONTRACT.

LEGEND:

ITEM 582.05M - REMOVAL OF STRUCTURAL CONCRETE- REPLACE WITH CLASS A CONCRETE. (CM)

ITEM 582.07M - REMOVAL OF STRUCTURAL CONCRETE - REPLACE WITH VERTICAL OVER-HEAD PATCH MATERIAL. (SM)

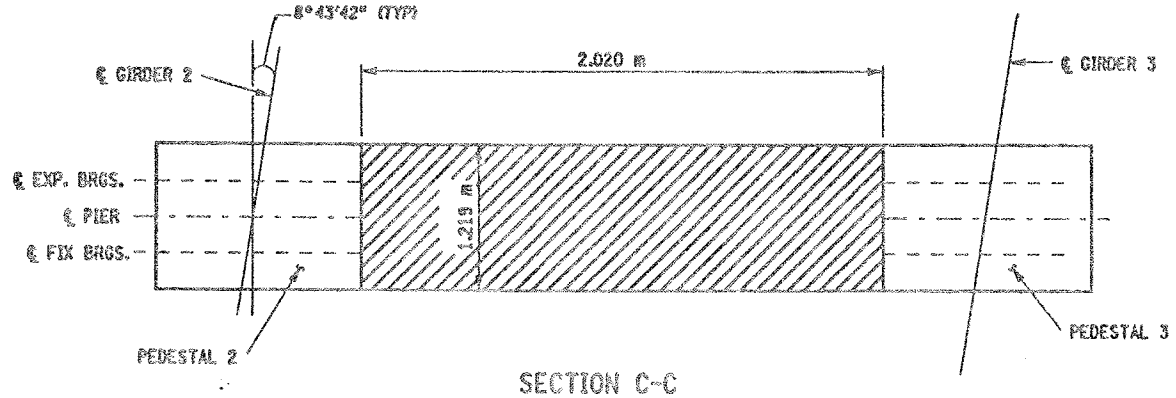

SECTION C-C
NOT TO SCALE

JACKING NOTES:

THE METHOD OF LIFTING SHALL BE APPROVED BY THE DEPUTY CHEIF ENGINEER (STRUCTURES), DSES, TWO WEEKS PRIOR TO THE START OF THE WORK.

NO LIFTING WILL BE ALLOWED UNTIL ALL TEMPORARY SUPPORTS ARE SECURED.

WHEN POSSIBLE, THERE WILL BE NO LIVE LOAD DURING LIFTING.

LIFTING SHALL BE CONFINED TO ONE END OF A SPAN AT ANY ONE TIME.

IF THE CONTRACTOR ELECTS TO LIFT ONLY ONE GIRDER AT A TIME PER PIER (TO A MAXIMUM OF 3 mm TO REMOVE LOAD FROM BEARING), NO VEHICULAR TRAFFIC RESTRICTIONS WILL BE REQUIRED AS STATED IN THE SPECIFICATION SECTION 585-STRUCTURAL LIFTING OPERATIONS.

WHERE THE CONTRACTOR IS REQUIRED TO PERFORM BEARING RESTORATION (SEE BR-11) AS WELL AS CONCRETE REPAIRS REQUIRING STRUCTURAL LIFTING, ONLY ONE STRUCTURAL LIFTING PAYMENT WILL BE MADE.

• PERFORM STRUCTURAL LIFTING UNDER ITEM 585.02M - STRUCTURAL LIFTING OPERATIONS - TYPE B (LIFTING AT A PIER) OR ITEM 585.03M - STRUCTURAL LIFTING OPERATIONS - TYPE C (LIFTING AT A PIER WHERE THE CONTRACTOR SHALL BE REQUIRED TO LIFT OFF THE FOOTING AND/OR GROUND LEVEL.

JACKING LOADS:

D.L. = 75 MT
L.L. = 50 MT
TOTAL = 125 MT

BRIDGE BEARING RESTORATION NOTES:

1. BRIDGE BEARING RESTORATION ITEM 15565.4302M SHALL INCLUDE ALL DESIGNATED WORK AS PER THE SPECIFICATION.
2. STRUCTURAL LIFTING SHALL BE USED WITH ALL EXPANSION BEARING RESTORATION.
3. IF THE CONTRACTOR ELECTS TO LIFT ONLY ONE GIRDER AT A TIME PER SPAN (TO A MAXIMUM OF 3 mm TO REMOVE LOAD FROM BEARINGS), NO VEHICULAR TRAFFIC RESTRICTIONS WILL BE REQUIRED AS STATED IN SPECIFICATIONS SECTON 585-STRUCTURAL LIFTING OPERATIONS.
4. BEARING RESTORATION SHALL AS A MINIMUM, AND IN ALL CASES INCLUDE REPLACEMENT OF BRONZE PLATE.
5. FIXED BEARING TO BE CLEANED IN PLACE. DO NOT DISASSEMBLE.

LIST OF ITEMS USED:

ITEM 15565.4302M	- BRIDGE BEARING RESTORATION (EA)
ITEM 582.05M	- REMOVAL OF STRUCTURAL CONCRETE - REPLACE WITH CLASS A CONCRETE (CM)
ITEM 582.07M	- REMOVAL OF STRUCTURAL CONCRETE - REPLACE WITH VERTICAL OVERHEAD PATCH MATERIAL (SM)
ITEM 585.02M	- STRUCTURAL LIFTING OPERATIONS - TYPE B (EA)
ITEM 585.03M	- STRUCTURAL LIFTING OPERATION - TYPE C (EA)

ALL DIMENSIONS ARE IN mm UNLESS OTHERWISE NOTED

AS BUILT REVISIONS

SIGNATURE DATE

INTERSTATE 481 SB
OVER
CSX RAILROAD YARD
PIER 1

STATE OF NEW YORK
DEPARTMENT OF TRANSPORTATION

FILENAME	REGION	DATE	DRAWING NO.
305613AE.P1A	3	10/02	PR17-1S

DESIGNED BY ____ CHECKED BY ____
DRAFTED BY ____
ESTIMATED BY ____
JOB MANAGER ____
DESIGN SUPERVISOR ____
CHECKED BY ____

FED ROAD REG. NO.	STATE	CONTRACT NO.	SHEET NO.	TOTAL SHEETS
1	N.Y.	D259214	298	432

BRIDGE REHABILITATION PROJECT (ELEMENT SPECIFIC)

VARIOUS BRIDGES ON INTERSTATE 481

TOWNS OF DEWITT AND CICERO

ONONDAGA COUNTY

P.I.N. 305613 | B.I.N. 1093571

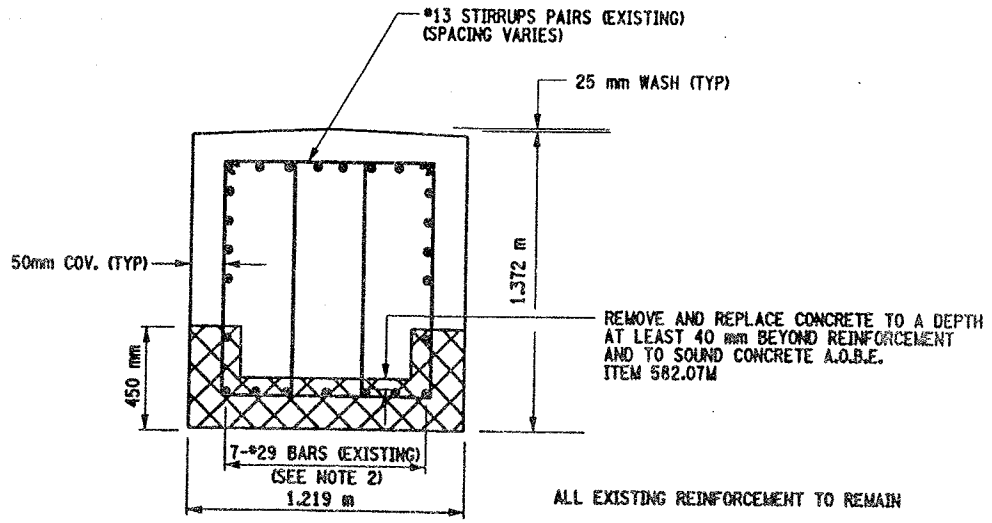

ALL EXISTING REINFORCEMENT TO REMAIN

SECTION A-A

NOT TO SCALE

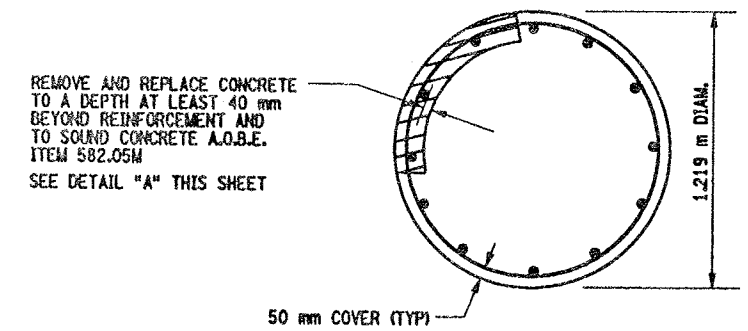

THE CONTRACTOR SHALL ONLY REMOVE AND REPLACE CONCRETE ON 1/4 OF THE CIRCUMFERENCE OF THE COLUMN SIMULTANEOUSLY, FOR THE FULL CURING PERIOD.

SECTION B-B

NOT TO SCALE

NOTES:

1. ALL CONCRETE REMOVAL OPERATIONS SHALL INCLUDE SAW CUTTING TO PRODUCE NEAT REMOVAL LINES. COST TO BE INCLUDED IN PRICE BID FOR THE APPROPRIATE REMOVAL ITEM.
2. THE REINFORCEMENT SHOWN IS TYPICAL FOR PIER #1. THE NUMBER AND OR SIZE OF REINFORCEMENT IN OTHER PIERS MAY VARY.
3. CONTRACTOR SHALL REMOVE DEBRIS FROM TOP OF PEDESTALS AND TOP OF CAP BEAM. COST TO BE INCLUDED IN THE PRICE BID FOR VARIOUS OTHER ITEMS OF CONTRACT.
4. CONTRACTOR SHALL REMOVE DEBRIS FROM TOP OF PEDESTALS AND TOP OF CAP BEAM. COST TO BE INCLUDED IN THE PRICE BID FOR VARIOUS OTHER ITEMS OF CONTRACT.

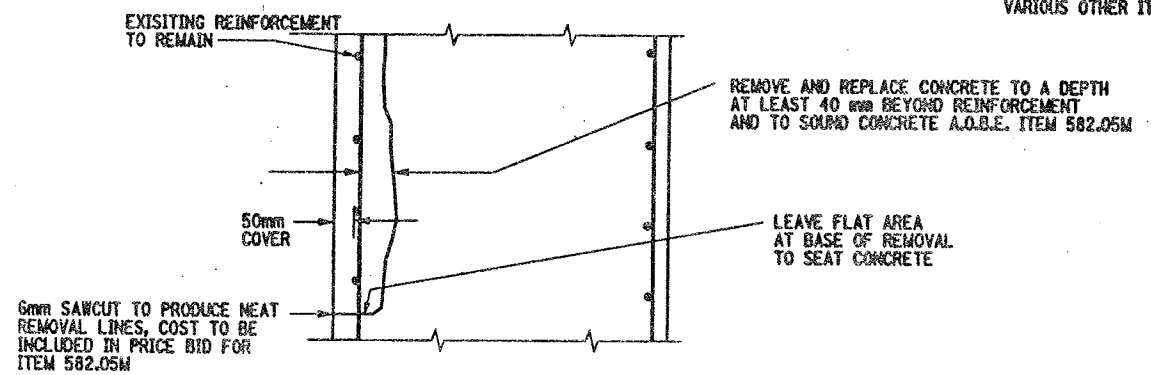

DETAIL "A"

NOT TO SCALE

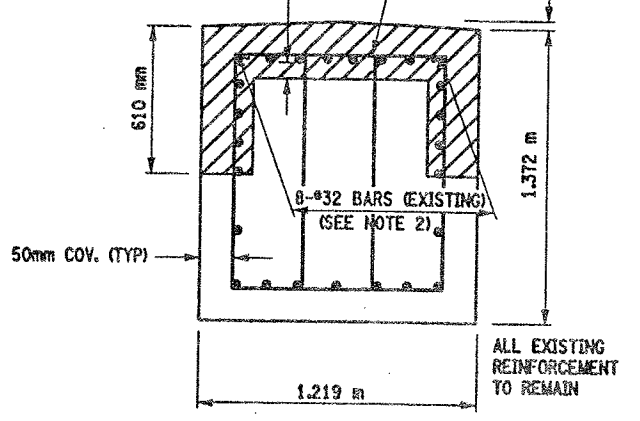

SECTION D-D

NOT TO SCALE

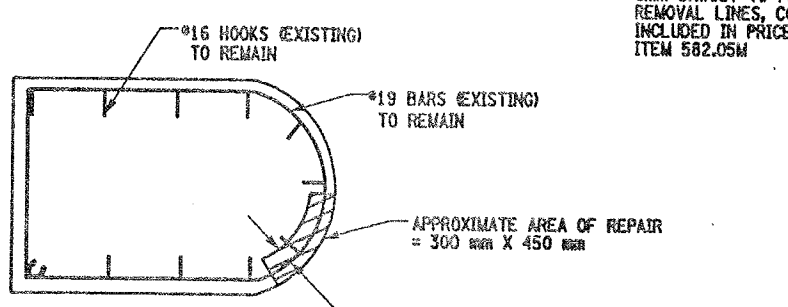

SECTION E-E

NOT TO SCALE

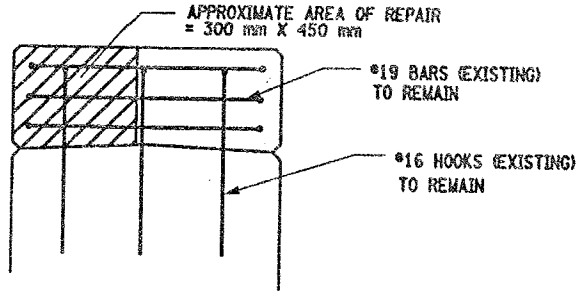

SECTION F-F

NOT TO SCALE

LEGEND:

ITEM 582.05M - REMOVAL OF STRUCTURAL CONCRETE- REPLACE WITH CLASS A CONCRETE. (CM)

ITEM 582.07M - REMOVAL OF STRUCTURAL CONCRETE - REPLACE WITH VERTICAL OVERHEAD PATCH MATERIAL. (SM)

LIST OF ITEMS USED:

ITEM 582.05M - REM. OF STRUC. CONC. - REPLACE WITH CLASS A CONCRETE (CM)
ITEM 582.07M - REM. OF STRUC. CONC. - REPL. W/ VERT. OVERHEAD PATCH MAT'L (SM)

ALL DIMENSIONS ARE IN mm UNLESS OTHERWISE NOTED

AS BUILT REVISIONS

SIGNATURE DATE

INTERSTATE 481 SB
OVER
CSX RAILROAD YARD
PIER 1

STATE OF NEW YORK
DEPARTMENT OF TRANSPORTATION

FILENAME	REGION	DATE	DRAWING NO.
305613AE.P1A	3	10/02	PR17-2S

ESTIMATED BY ____ DRAFTED BY ____ CHECKED BY ____ DESIGNED BY ____ JOB MANAGER ____ DESIGN SUPERVISOR ____

FED ROAD REG. NO.	STATE	CONTRACT NO.	SHEET NO.	TOTAL SHEETS
1	N.Y.	D259214	299	432

BRIDGE REHABILITATION PROJECT (ELEMENT SPECIFIC)
VARIOUS BRIDGES ON INTERSTATE 481
TOWNS OF DEWITT AND CICERO
ONONDAGA COUNTY
P.I.N. 305613 | B.I.N. 1093571

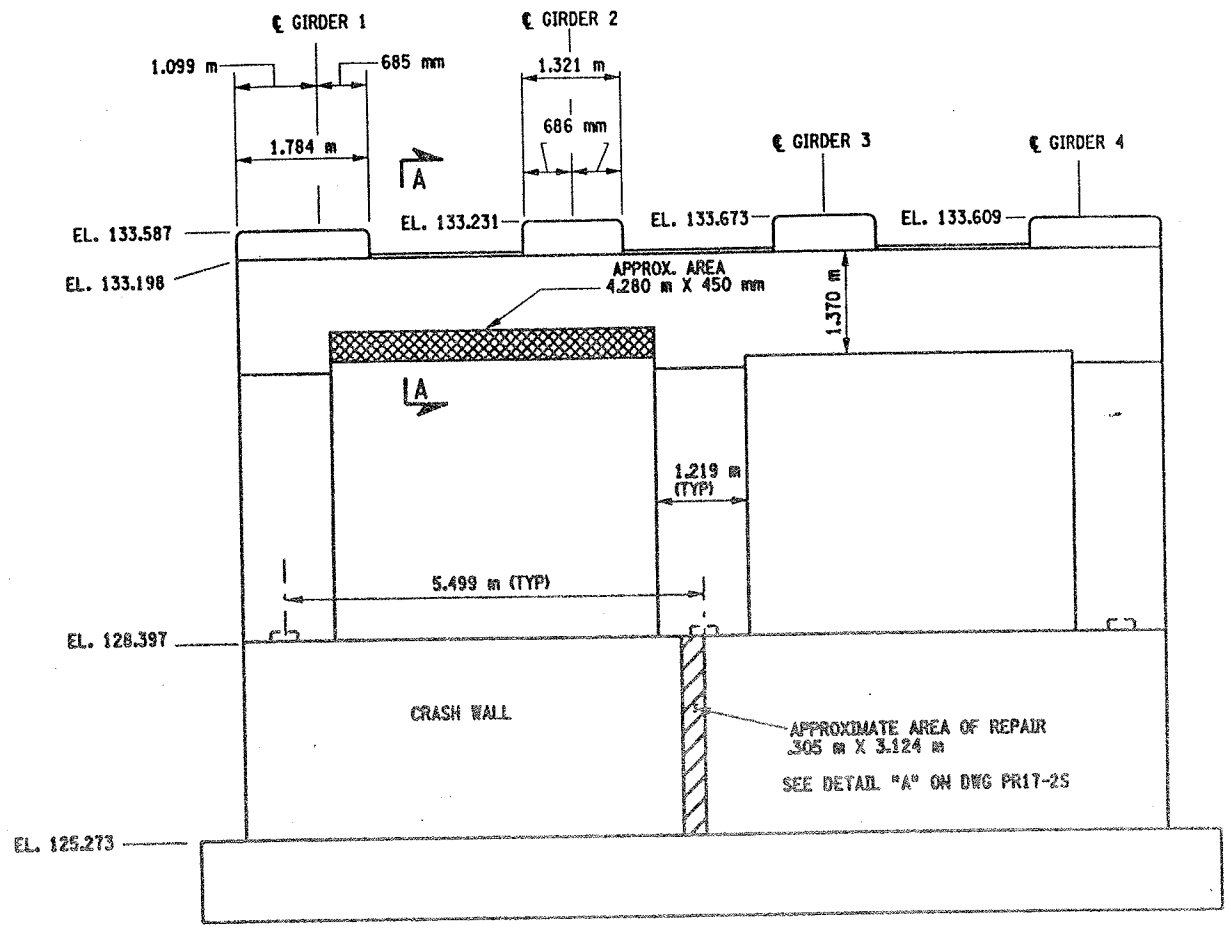

PIER 2 - FRONT FACE (LOOKING NORTH)
BIN 1093571
SCALE: 1 TO 50

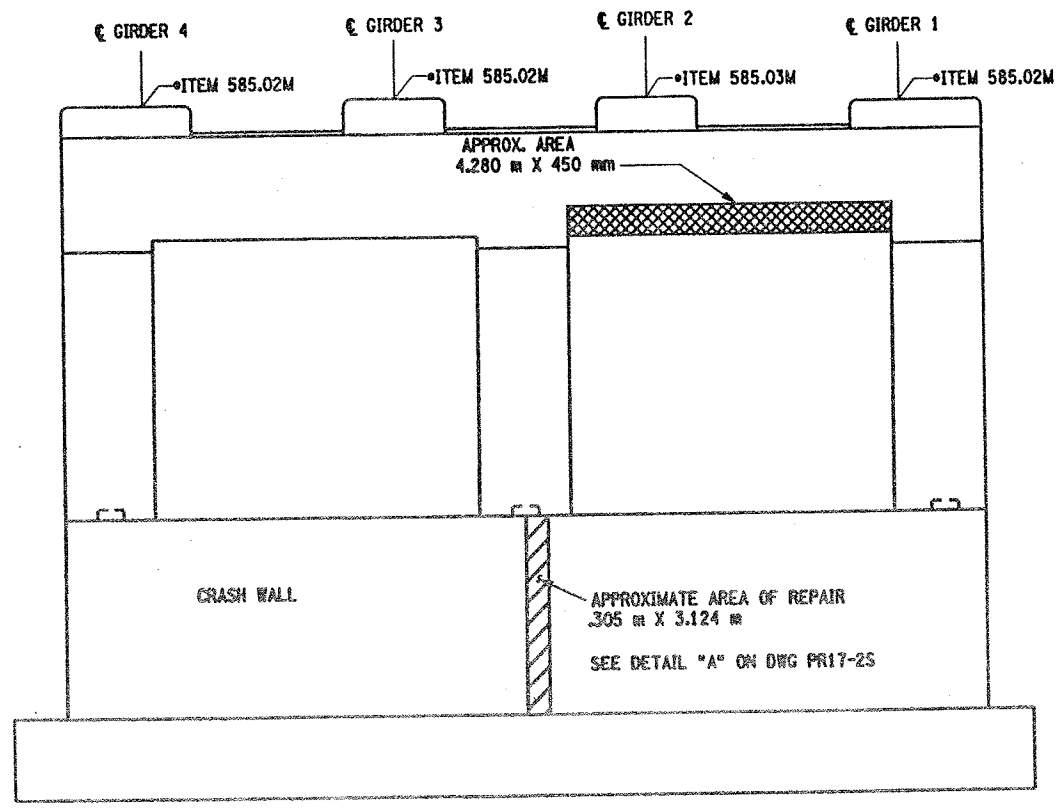

PIER 2- BACK FACE (LOOKING SOUTH)
BIN 1093571
SCALE: 1 TO 50

NOTES:

1. ALL REINFORCEMENT TO REMAIN.
2. RESTORE TO ORIGINAL DIMENSIONS.
3. PEDESTALS NUMERICALLY NUMBERED FROM WEST TO EAST.
4. FOR THE CONCRETE REPAIR AREAS, THE CONCRETE SHALL BE REMOVED TO AT LEAST 40mm MIN. BEYOND THE ENCOUNTERED REINFORCEMENT AND TO SOUND CONCRETE, A.O.B.E.
5. ELEVATIONS SHOWN ARE FROM ORIGINAL CONTRACT PLANS F.I.S.H. 70-7 AND ARE FOR REFERENCE ONLY.
6. REMOVAL DIMENSIONS SHOWN ON PLANS ARE ESTIMATED AND SHALL BE FIELD VERIFIED BY THE CONTRACTOR PRIOR TO BEGINNING OF REMOVAL OPERATIONS A.O.B.E.
7. PERFORM BEARING RESTORATION TO ALL EXPANSION BEARINGS (TO INCLUDE RESETTING OF UNDEREXTENDED OR OVEREXTENDED BEARINGS), SEE DWG. BR-10 & BR-11 FOR BEARING RESTORATION DETAILS. SEE DWG. PR17-1S FOR BEARING RESTORATION NOTES.
8. SEE DWG. PR17-2S FOR SECTION A-A AND DETAIL "A".
9. ALL CONCRETE REMOVAL SHALL BE SAWCUT TO PRODUCE NEAT REMOVAL LINES. COST TO BE INCLUDED IN THE PRICE BID FOR ITEM 582.05M AND ITEM 582.07M.
10. FOR JACKING NOTES SEE DWG. PR17-1S
11. CONTRACTOR WHALL REMOVE DEBRIS FROM TOP OF PEDESTALS AND TOP OF CAP BEAM. COST TO BE INCLUDED IN THE PRICE BE FOR VARIOUS OTHER ITEMS OF CONTRACT.

• PERFORM STRUCTURAL LIFTING UNDER ITEM 585.02M - STRUCTURAL LIFTING OPERATIONS - TYPE B (LIFTING AT A PIER) OR ITEM 585.03M - STRUCTURAL LIFTING OPERATIONS - TYPE C (LIFTING AT A PIER WHERE THE CONTRACTOR SHALL BE REQUIRED TO LIFT OFF THE FOOTING AND/OR GROUND LEVEL.

JACKING LOADS:

D.L. = 75 MT
L.L. = 50 MT
TOTAL = 125 MT

LEGEND:

ITEM 582.05M - REMOVAL OF STRUCTURAL CONCRETE- REPLACE WITH CLASS A CONCRETE (CU)

ITEM 582.07M - REMOVAL OF STRUCTURAL CONCRETE - REPLACE WITH VERTICAL OVER-HEAD PATCH MATERIAL. (SM)

LIST OF ITEMS USED

ITEM 15565.4302M - BRIDGE BEARING RESTORATION (EA)
ITEM 582.05M - REM. OF STRUC. CONC. - REPLACE WITH CLASS A CONCRETE (CU)
ITEM 582.07M - REM. OF STRUC. CONC. - REPL. W/ VERT. OVERHEAD PATCH MAT'L (SM)
ITEM 585.02M - STRUCTURAL LIFTING OPERATIONS - TYPE B (EA)
ITEM 585.03M - STRUCTURAL LIFTING OPERATION - TYPE C (EA)

ALL DIMENSIONS ARE IN mm UNLESS OTHERWISE NOTED

AS BUILT REVISIONS

SIGNATURE DATE

INTERSTATE 481 SB
OVER
CSX RAILROAD YARD
PIER 2

STATE OF NEW YORK
DEPARTMENT OF TRANSPORTATION

FILENAME	REGION	DATE	DRAWING NO.
305613AE_P2A	3	10/02	PR17-3S

DESIGN SUPERVISOR ____ JOB MANAGER ____ DESIGNED BY ____ DRAFTED BY ____ ESTIMATED BY ____ CHECKED BY ____ CHECKED BY ____

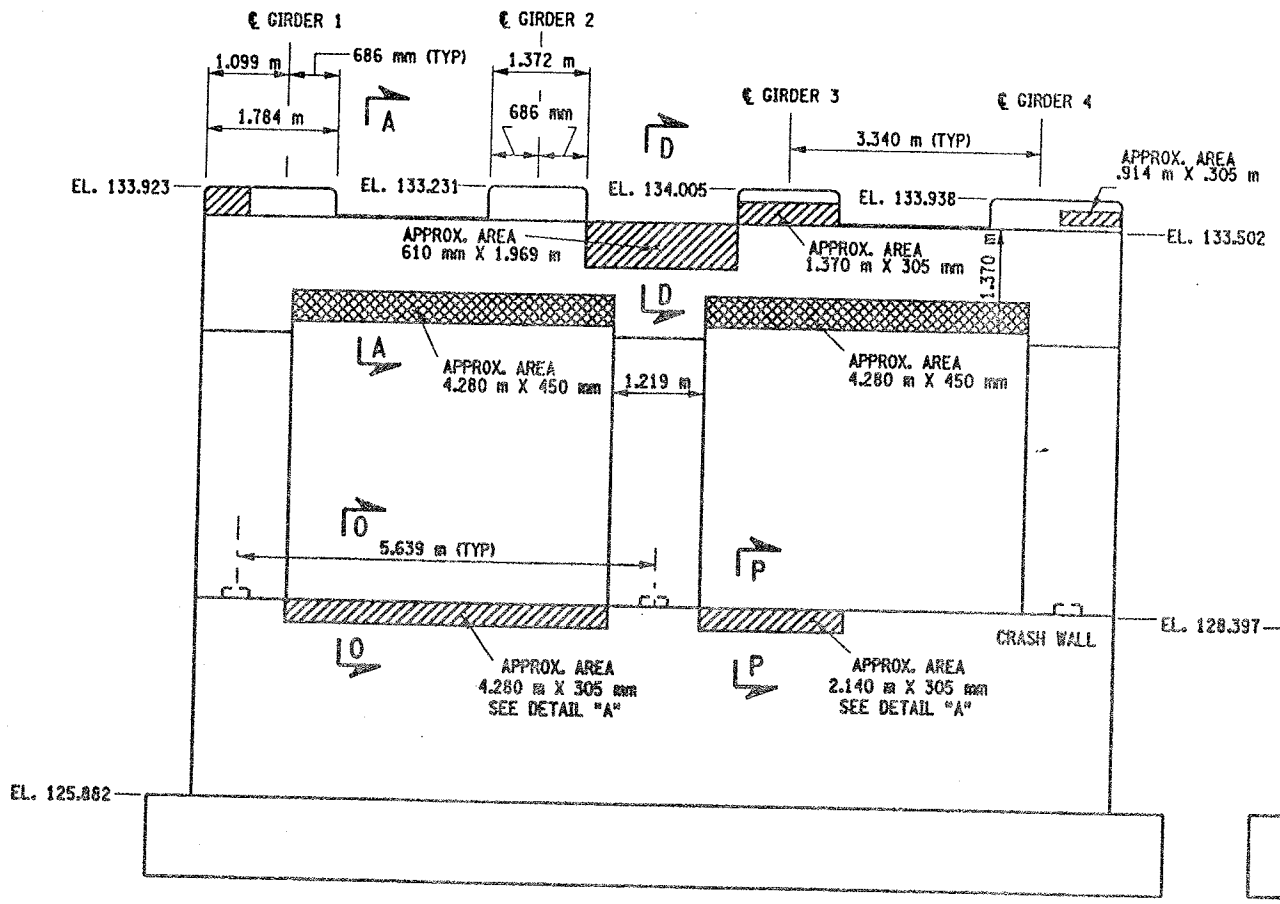

PIER 3 - FRONT FACE (LOOKING NORTH)

BIN 1093571

SCALE: 1 TO 50

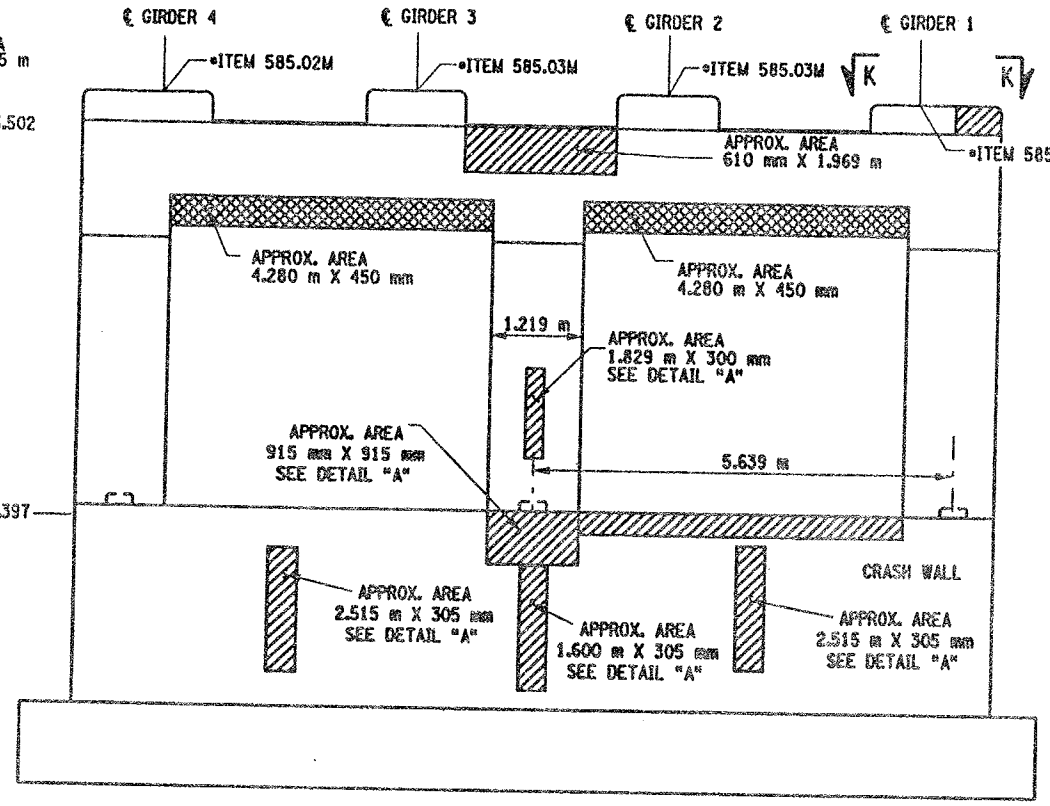

PIER 3 - BACK FACE (LOOKING SOUTH)

BIN 1093571

SCALE: 1 TO 50

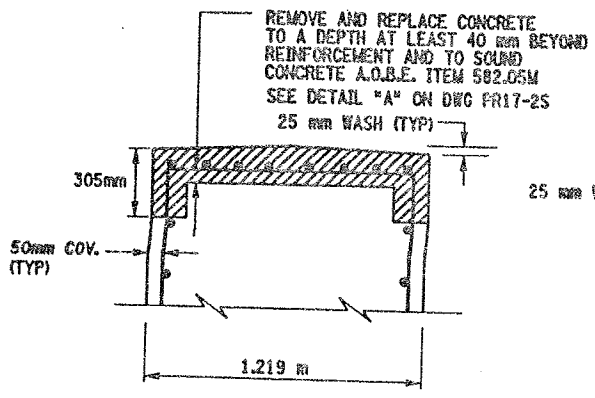

ALL EXISTING REINFORCEMENT TO REMAIN

SECTION O-O

NOT TO SCALE

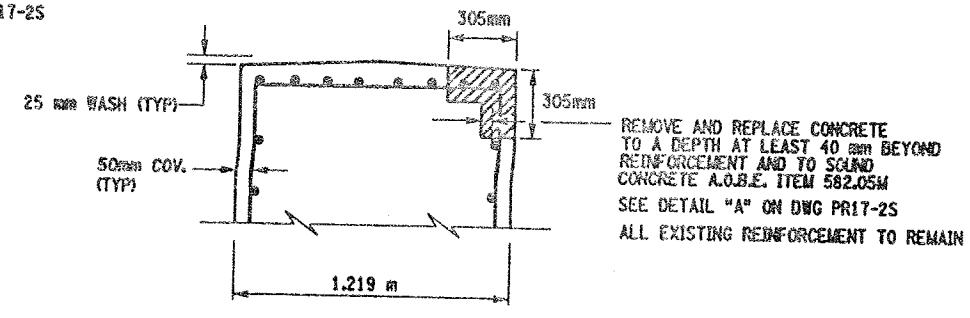

SECTION P-P

NOT TO SCALE

LIST OF ITEMS USED:

ITEM 15565.4302M - BRIDGE BEARING RESTORATION (EA)
ITEM 582.05M - REM. OF STRUC. CONC. - REPLACE WITH CLASS A CONCRETE (CM)
ITEM 582.07M - REM. OF STRUC. CONC. - REPL. W/ VERT. OVERHEAD PATCH MATL. (SM)
ITEM 585.02M - STRUCTURAL LIFTING OPERATIONS - TYPE B (EA)
ITEM 585.03M - STRUCTURAL LIFTING OPERATION - TYPE C (EA)

• PERFORM STRUCTURAL LIFTING UNDER ITEM 585.02M - STRUCTURAL LIFTING OPERATIONS - TYPE B (LIFTING AT A PIER) OR ITEM 585.03M - STRUCTURAL LIFTING OPERATIONS - TYPE C (LIFTING AT A PIER WHERE THE CONTRACTOR SHALL BE REQUIRED TO LIFT OFF THE FOOTING AND/OR GROUND LEVEL.

JACKING LOADS:

D.L. = 100 MT
L.L. = 50 MT
TOTAL = 150 MT

FED ROAD REG. NO.	STATE	CONTRACT NO.	SHEET NO.	TOTAL SHEETS
1	N.Y.	D259214	300	432

BRIDGE REHABILITATION PROJECT (ELEMENT SPECIFIC)
VARIOUS BRIDGES ON INTERSTATE 481
TOWNS OF DEWITT AND CICERO
ONONDAGA COUNTY
P.I.N. 305613 | B.I.N. 1093571

NOTES:

1. ALL REINFORCEMENT TO REMAIN.
2. RESTORE TO ORIGINAL DIMENSIONS.
3. PEDESTALS NUMERICALLY NUMBERED FROM WEST TO EAST.
4. FOR THE CONCRETE REPAIR AREAS, THE CONCRETE SHALL BE REMOVED TO AT LEAST 40mm MIN. BEYOND THE ENCOUNTERED REINFORCEMENT AND TO SOUND CONCRETE, A.O.B.E.
5. ELEVATIONS SHOWN ARE FROM ORIGINAL CONTRACT PLANS F.I.S.H. 70-7 AND ARE FOR REFERENCE ONLY.
6. REMOVAL DIMENSIONS SHOWN ON PLANS ARE ESTIMATED AND SHALL BE FIELD VERIFIED BY THE CONTRACTOR PRIOR TO BEGINNING OF REMOVAL OPERATIONS A.O.B.E.
7. PERFORM BEARING RESTORATION TO ALL EXPANSION BEARINGS (TO INCLUDE RESETTING OF UNDEREXTENDED OR OVEREXTENDED BEARINGS). SEE DWG BR-10 & BR-11 FOR BEARING RESTORATION DETAILS. SEE DWG. PR17-1S FOR BEARING RESTORATION NOTES.
8. SEE DWG. PR17-2S FOR SECTIONS A-A, D-D AND DETAIL "A".
9. SEE DWG. PR17-2N FOR SECTION K-K.
10. ALL CONCRETE REMOVAL SHALL BE SAWCUT TO PRODUCE NEAT REMOVAL LINES. COST TO BE INCLUDED IN THE PRICE BID FOR ITEM 582.05M AND ITEM 582.07M.
11. FOR JACKING NOTES SEE DWG. PR17-1S.
12. CONTRACTOR SHALL REMOVE DEBRIS FROM TOP OF PEDISTALS AND TOP OF CAPBEAM. COST TO BE INCLUDED IN THE PRICE BID FOR VARIOUS OTHER ITEMS OF CONTRACT.

LEGEND:

ITEM 582.05M - REMOVAL OF STRUCTURAL CONCRETE- REPLACE WITH CLASS A CONCRETE (CM)

ITEM 582.07M - REMOVAL OF STRUCTURAL CONCRETE - REPLACE WITH VERTICAL OVERHEAD PATCH MATERIAL. (SM)

ALL DIMENSIONS ARE IN mm UNLESS OTHERWISE NOTED

AS BUILT REVISIONS

SIGNATURE DATE

INTERSTATE 481 SB
OVER
CSX RAIROAD YARD
PIER 3

STATE OF NEW YORK
DEPARTMENT OF TRANSPORTATION

FILENAME	REGION	DATE	DRAWING NO.
305613AE.P3A	3	10/02	PR17-4S

DESIGN SUPERVISOR ____ JOB MANAGER ____ DESIGNED BY ____ DRAFTED BY ____ ESTIMATED BY ____ CHECKED BY ____

FED ROAD REG. NO.	STATE	CONTRACT NO.	SHEET NO.	TOTAL SHEETS
1	N.Y.	D259214	301	432

BRIDGE REHABILITATION PROJECT (ELEMENT SPECIFIC)
VARIOUS BRIDGES ON INTERSTATE 481
TOWNS OF DEWITT AND CICERO
ONONDAGA COUNTY
P.I.N. 305613 B.I.N. 1093571

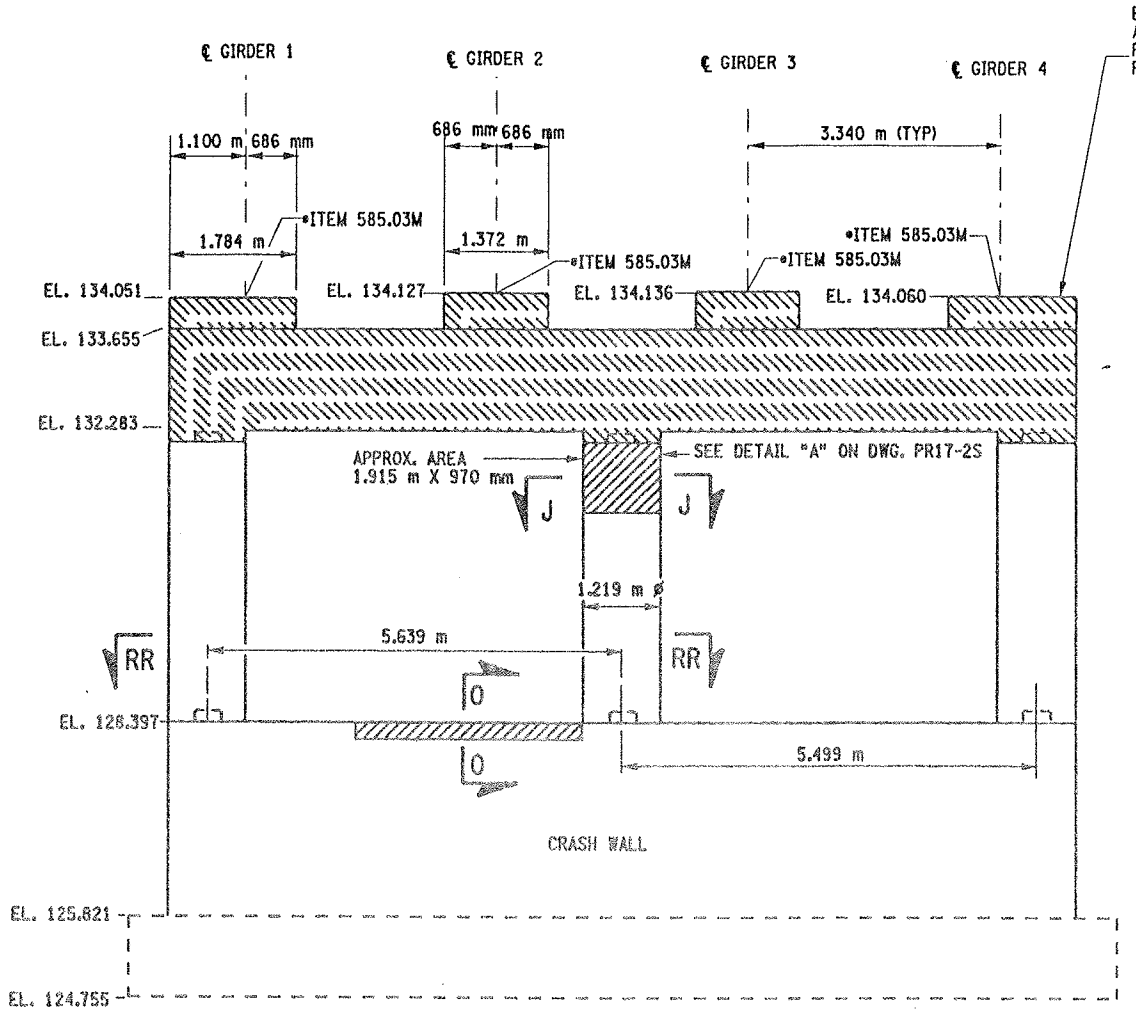

PIER 4 - FRONT FACE (LOOKING NORTH)
BIN 1093571 REMOVAL
SCALE: 1 TO 50

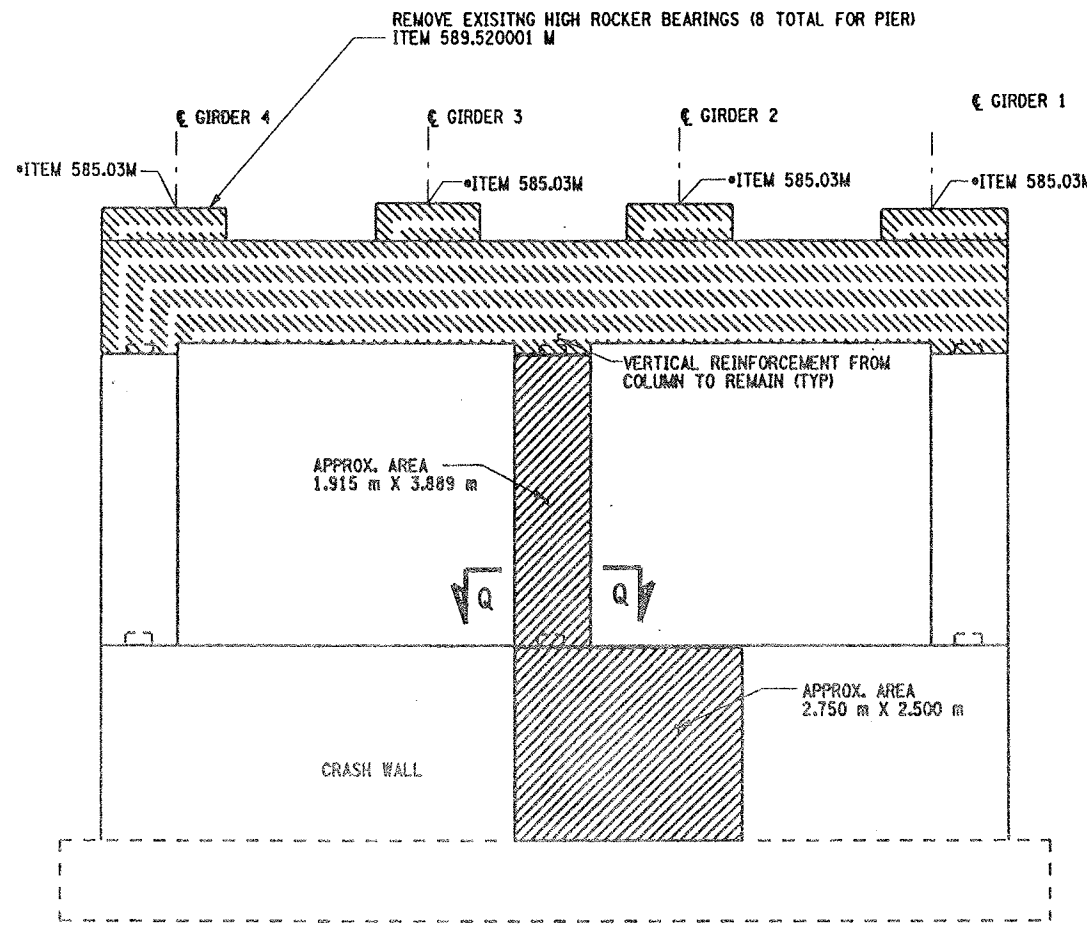

PIER 4 - BACKFACE (LOOKING SOUTH)
BIN 1093571 REMOVAL
SCALE: 1 TO 50

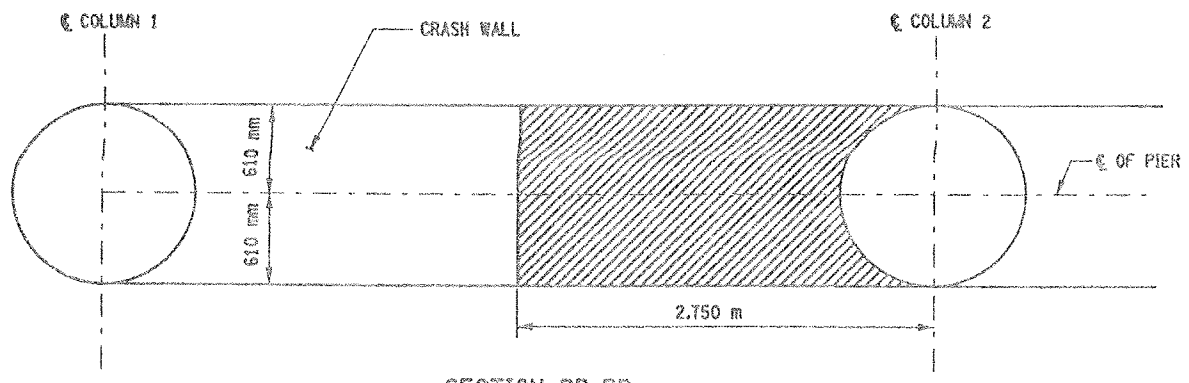

SECTION RR-RR
SCALE 1:25

• PERFORM STRUCTURAL LIFTING UNDER ITEM 585.02M - STRUCTURAL LIFTING OPERATIONS - TYPE B (LIFTING AT A PIER) OR ITEM 585.03M - STRUCTURAL LIFTING OPERATIONS - TYPE C (LIFTING AT A PIER WHERE THE CONTRACTOR SHALL BE REQUIRED TO LIFT OFF THE FOOTING AND/OR GROUND LEVEL.

JACKING LOADS:

D.L. = 100 MT
L.L. = 50 MT
TOTAL = 150 MT

LIST OF ITEMS USED:

ITEM 580.01M	- REMOVAL OF STRUCTURAL CONCRETE (CM)
ITEM 582.05M	- REM. OF STRUC. CONC. - REPLACE WITH CLASS A CONCRETE (CM)
ITEM 585.03M	- STRUCTURAL LIFTING OPERATION - TYPE C (EA)
ITEM 589.520001M	- REMOVAL OF EXISTING STEEL (EA)

NOTES:

1. ALL REINFORCEMENT TO REMAIN, (EXCEPT PEDESTAL REINFORCEMENT AND CAPBEAM REINFORCEMENT). THE VERTICAL REINFORCEMENT IN THE CAPBEAMS-ORIGINATING FROM THE COLUMNS SHALL REMAIN.
2. PEDESTALS NUMERICALLY NUMBERED FROM WEST TO EAST.
3. FOR THE CONCRETE REPAIR AREAS, THE CONCRETE SHALL BE REMOVED TO AT LEAST 40mm MIN. BEYOND THE ENCOUNTERED REINFORCEMENT AND TO SOUND CONCRETE, A.O.B.E.
4. ELEVATIONS SHOWN ARE FROM ORIGINAL CONTRACT PLANS F.I.S.H. 70-7 AND ARE FOR REFERENCE ONLY.
5. REMOVAL DIMENSIONS SHOWN ON PLANS ARE ESTIMATED AND SHALL BE FIELD VERIFIED BY THE CONTRACTOR AND ENGINEER PRIOR TO BEGINNING OF REMOVAL OPERATIONS A.O.B.E.
6. SEE DWG. PR17-4N FOR SECTION Q-Q.
7. SEE DWG. PR17-2N FOR SECTION J-J.
8. SEE DWG. PR17-4S FOR SECTION O-O.
9. ALL CONCRETE REMOVAL SHALL BE SAWCUT TO PRODUCE NEAT REMOVAL LINES. COST TO BE INCLUDED IN THE PRICE BID FOR ITEM 582.05M AND ITEM 582.07M.
10. FOR JACKING NOTES SEE DWG. PR17-1S
11. CONTRACTOR SHALL REMOVE DEBRIS FROM TOP OF PEDESTALS AND TOP OF CAP BEAM. COST TO BE INCLUDED IN THE PRICE BID FOR VARIOUS OTHER ITEMS OF CONTRACT.
12. SEE BR-1 AND BR-2 FOR BEARING TABLE AND BEARING DETAILS.

LEGEND:

REPAIR: ITEM 582.05M - REMOVAL OF STRUCTURAL CONCRETE- REPLACE WITH CLASS A CONCRETE (CM)

REPLACEMENT: ITEM 580.01M - REMOVAL OF STRUCTURAL CONCRETE - (CM) (COMPLETE REMOVAL)

ALL DIMENSIONS ARE IN mm UNLESS OTHERWISE NOTED

AS BUILT REVISIONS

SIGNATURE DATE

INTERSTATE 481 SB
OVER
CSX RAILROAD YARD
PIER 4
REMOVAL DETAILS

STATE OF NEW YORK
DEPARTMENT OF TRANSPORTATION

FILENAME	REGION	DATE	DRAWING NO.
305613AE.P4A	3	10/02	PR17-5S

CHECKED BY
DRAFTED BY
ESTIMATED BY
CHECKED BY
DESIGNED BY
JOB MANAGER
DESIGN SUPERVISOR

FED ROAD REG. NO.	STATE	CONTRACT NO.	SHEET NO.	TOTAL SHEETS
1	N.Y.	D259214	302	432

BRIDGE REHABILITATION PROJECT (ELEMENT SPECIFIC)
VARIOUS BRIDGES ON INTERSTATE 481
TOWNS OF DEWITT AND CICERO
COUNTY OF ONONDAGA
P.I.N. 305613 | B.I.N. 1093571

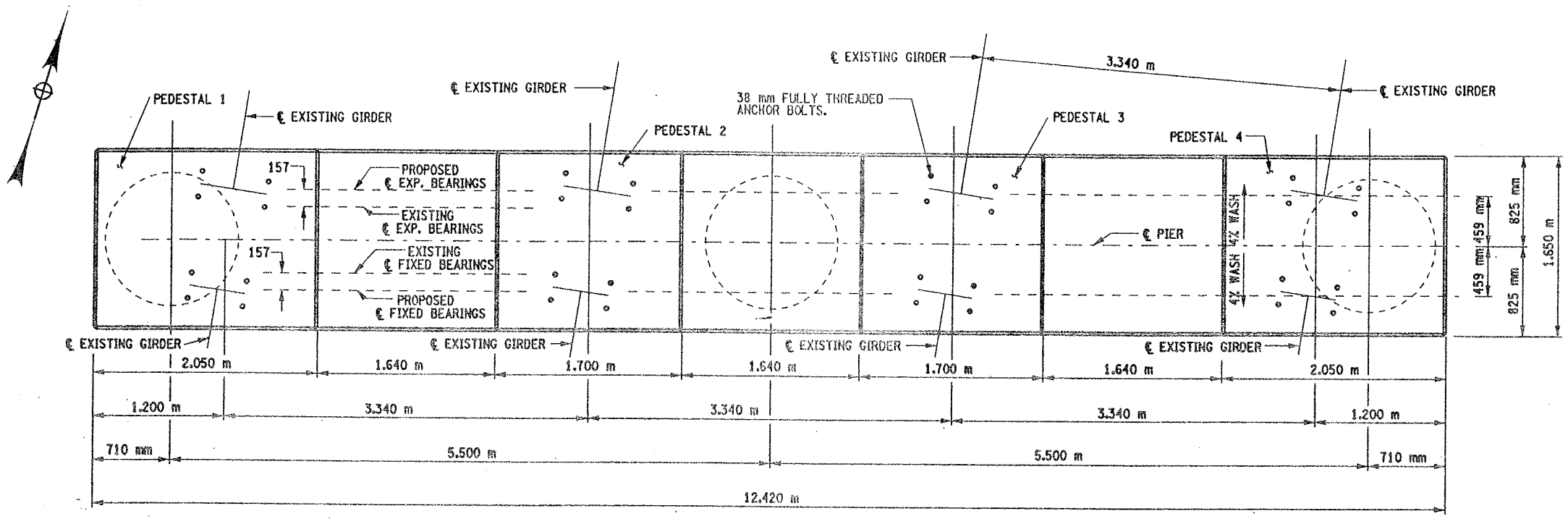

PROPOSED PLAN
SCALE 1:25

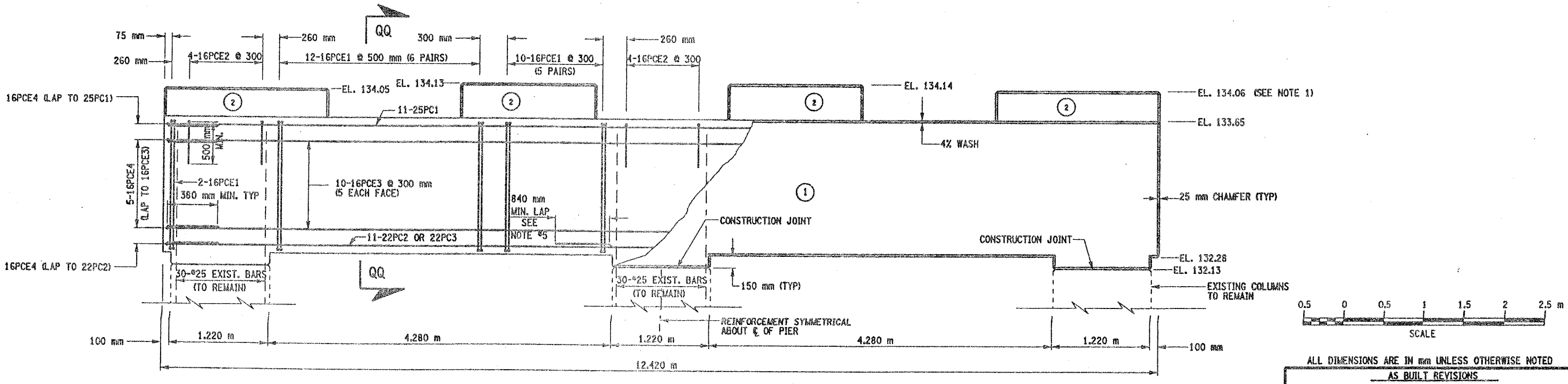

(NO.) INDICATES CONCRETE PLACEMENT NUMBER

PROPOSED ELEVATION
SCALE 1:25

CONCRETE TABLE (m^3)		
PLACEMENT	QUANTITY	ITEM NO.
1	5.46	555.09M
2	28.60	555.09M

LIST OF ITEMS USED:

ITEM 555.09M - CONCRETE FOR STRUCTURES, CLASS HP (CM)
ITEM 556.0201M - UNCOATED BAR REINFORCEMENT FOR CONCRETE STRUC. (KG)
ITEM 556.0202M - EPOXY-COATED BAR REINFORCEMENT FOR STRUC. (KG)

NOTES:

1. THESE ELEVATIONS MAY HAVE TO BE ADJUSTED TO ACCOMMODATE THE ACTUAL BEARINGS FURNISHED. IT IS THE RESPONSIBILITY OF THE CONTRACTOR TO COORDINATE ANY CHANGES IN THE BEARINGS WHICH MAY AFFECT THE PEDESTAL ELEVATIONS OR DIMENSIONS.
2. SEE DWG PR17-7S FOR ANCHOR BOLT LAYOUT, PEDESTAL REINFORCEMENT DETAILS, SECTION QQ-QQ, AND CHAMFER DETAIL.
3. SEE DWG. NO. BL-6 FOR BAR LIST AND BAR BENDING DIAGRAMS.
4. SEE BR-1 AND BR-2 FOR BEARING DETAILS.
5. REINF. BAR LAPS, IF REQUIRED SHALL BE STAGGERED SO NO MORE THAN 50% OF THE BARS ARE LAPPED AT ANY ONE LOCATION.

0.5 0 0.5 1 1.5 2 2.5 m
SCALE

ALL DIMENSIONS ARE IN mm UNLESS OTHERWISE NOTED

AS BUILT REVISIONS

SIGNATURE DATE

INTERSTATE 481 SB
OVER
CSX RAILROAD YARD
PIER 4

STATE OF NEW YORK
DEPARTMENT OF TRANSPORTATION

FILENAME	REGION	DATE	DRAWING NO.
305613AE.P4A	3	10/02	PR17-6S

ESTIMATED BY ____ DRAFTED BY ____ CHECKED BY ____
DESIGN SUPERVISOR ____ JOB MANAGER ____ DESIGNED BY ____ CHECKED BY ____

FED ROAD REG. NO.	STATE	CONTRACT NO.	SHEET NO.	TOTAL SHEETS
1	N.Y.	D259214	303	432

BRIDGE REHABILITATION PROJECT (ELEMENT SPECIFIC)
VARIOUS BRIDGES ON INTERSTATE 481
TOWNS OF DEWITT AND CICERO
COUNTY OF ONONDAGA
P.I.N. 305613 B.I.N. 1093571

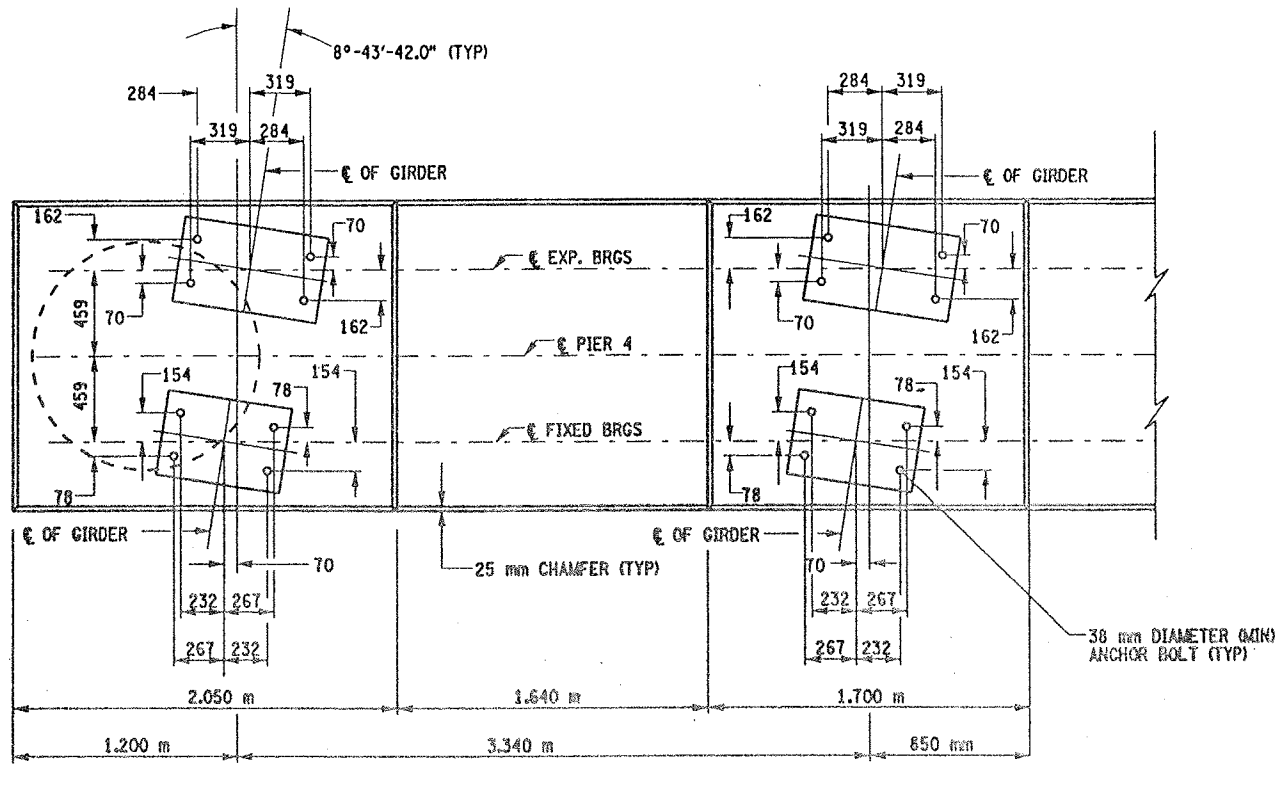

ANCHOR BOLT LAYOUT

SCALE 1:20

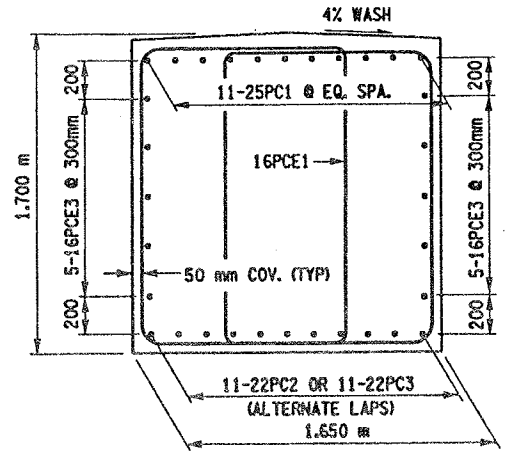

SECTION QQ-QQ

SCALE 1 TO 20

NOTES:

1. SEE DWG. NO. BL-6 FOR BAR LIST AND BAR BENDING DIAGRAM.
2. CONTRACTOR SHALL REMOVE DEBRIS FROM TOP OF PEDESTALS AND TOP OF CAP BEAM. COST TO BE INCLUDED IN THE PRICE BID FOR VARIOUS OTHER ITEMS OF CONTRACT.
3. SEE BR-1 AND BR-2 FOR BEARING DETAILS.
4. SAME BAR MARKS SHALL APPLY FOR BOTH PIERS.

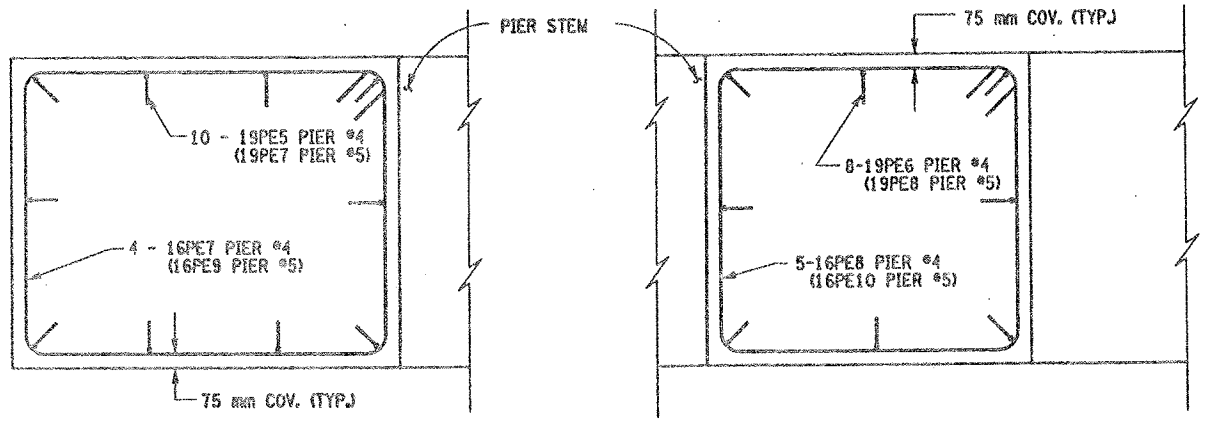

PEDESTALS 1 & 4 PEDESTALS 2 & 3

PEDESTAL REINFORCEMENT (PLAN)

SCALE 1:20

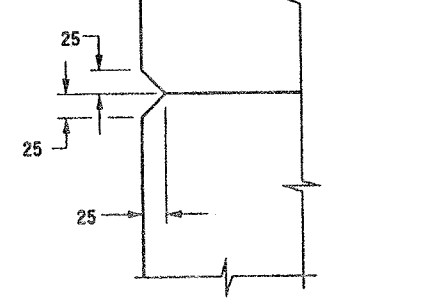

CHAMFER DETAIL

NOT TO SCALE

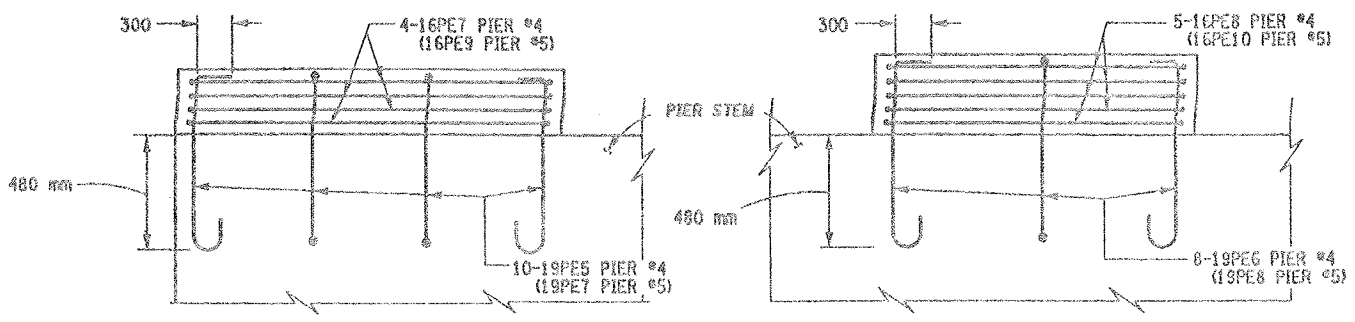

PEDESTALS 1 (PEDESTAL 4 SIMILAR) PEDESTALS 2 & 3

PEDESTAL REINFORCEMENT (ELEVATION)

SCALE 1:20

LIST OF ITEMS USED:

ITEM 555.09M - CONCRETE FOR STRUCTURES, CLASS HP (CM)
ITEM 555.0201M - UNCOATED BAR REINFORCEMENT FOR CONCRETE STRUC. (KG)
ITEM 555.0202M - EPOXY-COATED BAR REINFORCEMENT FOR STRUC. (KG)
ITEM 580.01M - REMOVAL OF STRUCTURAL CONCRETE (CM)

0.5 0 0.5 1 1.5 2 m
SCALE

ALL DIMENSIONS ARE IN mm UNLESS OTHERWISE NOTED

AS BUILT REVISIONS

SIGNATURE DATE

INTERSTATE 481 SB
OVER
CSX RAILROAD YARD
PIERS 4 & 5

STATE OF NEW YORK
DEPARTMENT OF TRANSPORTATION

FILENAME	REGION	DATE	DRAWING NO.
305613AE.P4A	3	10/02	PR17-7S

DESIGN SUPERVISOR ____ JOB MANAGER ____ DESIGNED BY ____ CHECKED BY ____
ESTIMATED BY ____ DRAFTED BY ____ CHECKED BY ____

FED ROAD REG. NO.	STATE	CONTRACT NO.	SHEET NO.	TOTAL SHEETS
1	N.Y.	D259214	304	432

BRIDGE REHABILITATION PROJECT (ELEMENT SPECIFIC)

VARIOUS BRIDGES ON INTERSTATE 481

TOWNS OF DEWITT AND CICERO

ONONDAGA COUNTY

P.I.N. 305613 | B.I.N. 1093571

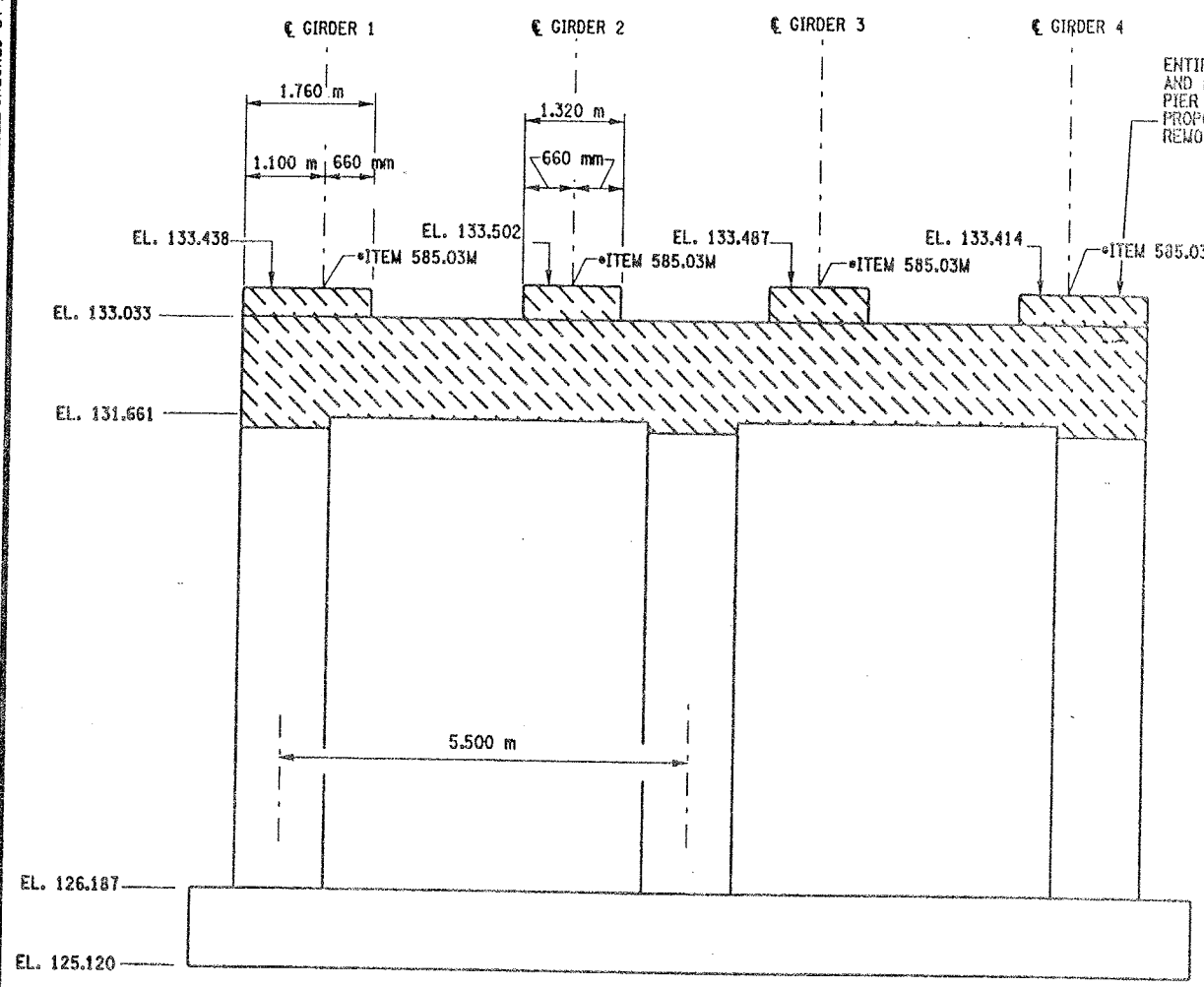

PIER 5 - FRONT FACE (LOOKING NORTH)
BIN 1093571 (REMOVAL)
SCALE: 1 TO 50

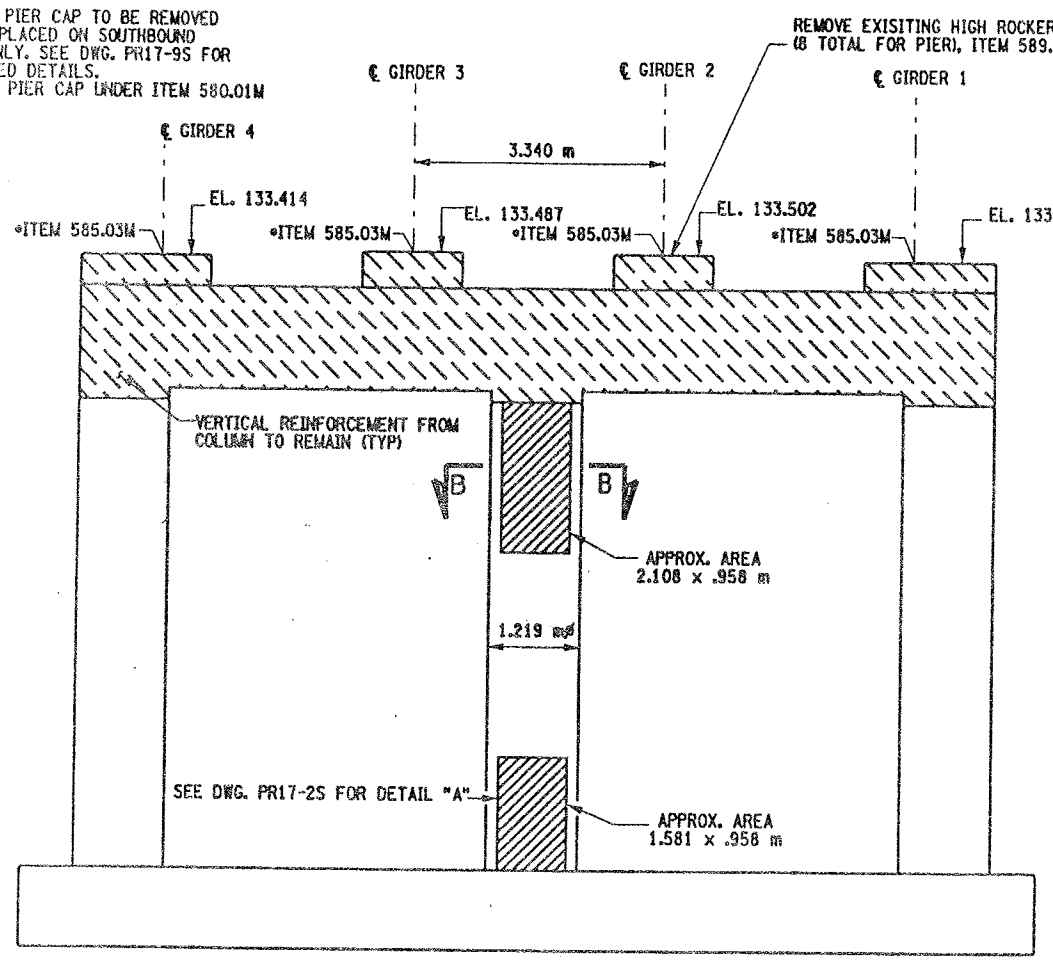

PIER 5 - BACK FACE (LOOKING SOUTH)
BIN 1093571 (REMOVAL)
SCALE: 1 TO 50

NOTES:

1. ALL REINFORCEMENT TO REMAIN, (EXCEPT PEDESTAL REINFORCEMENT AND CAPBEAM REINFORCEMENT), THE VERTICAL REINFORCEMENT IN THE CAPBEAMS ORIGINATING FROM THE COLUMNS SHALL REMAIN.
2. PEDESTALS NUMERICALLY NUMBERED FROM WEST TO EAST.
3. FOR THE CONCRETE REPAIR AREAS, THE CONCRETE SHALL BE REMOVED TO AT LEAST 40mm MIN. BEYOND THE ENCOUNTERED REINFORCEMENT AND TO SOUND CONCRETE, A.O.B.E.
4. ELEVATIONS SHOWN ARE FROM ORIGINAL CONTRACT PLANS F.I.S.H. 70-7 AND ARE FOR REFERENCE ONLY.
5. REMOVAL DIMENSIONS SHOWN ON PLANS ARE ESTIMATED AND SHALL BE FIELD VERIFIED BY THE CONTRACTOR AND ENGINEER PRIOR TO BEGINNING OF REMOVAL OPERATIONS A.O.B.E.
6. SEE DWG. PR17-2S FOR SECTION B-B AND DETAIL "A".
7. ALL CONCRETE REMOVAL SHALL BE SAWCUT TO PRODUCE NEAT REMOVAL LINES. COST TO BE INCLUDED IN THE PRICE BID FOR ITEM 582.05M AND ITEM 582.07M
8. FOR JACKING LOADS SEE DWG. PR17-1S
9. SEE BR-1 AND BR-2 FOR BEARING TABLE AND BEARING DETAIL

* PERFORM STRUCTURAL LIFTING UNDER ITEM 585.02M - STRUCTURAL LIFTING OPERATIONS - TYPE B LIFTING AT A PIER) OR ITEM 585.03M - STRUCTURAL LIFTING OPERATIONS - TYPE C LIFTING AT A PIER WHERE THE CONTRACTOR SHALL BE REQUIRED TO LIFT OFF THE FOOTING AND/OR GROUND LEVEL.

JACKING LOADS:

D.L. = 100 MT
L.L. = 50 MT
TOTAL = 150 MT

LEGEND:

REPAIR: ITEM 582.05M - REMOVAL OF STRUCTURAL CONCRETE- REPLACE WITH CLASS A CONCRETE (CM)

REPLACEMENT: *ITEM 580.01M - REMOVAL OF STRUCTURAL* CONCRETE - (CM) (COMPLETE REMOVAL)

LIST OF ITEMS USED:

ITEM 580.01M - REMOVAL OF STRUCTURAL CONCRETE (CM)
ITEM 582.05M - REM. OF STRUC. CONC. - REPLACE WITH CLASS A CONCRETE (CM)
ITEM 585.02M - STRUCTURAL LIFTING OPERATION - TYPE C (EACH)
ITEM 589.520001M - REMOVAL OF EXISITING STEEL (EACH)

ALL DIMENSIONS ARE IN mm UNLESS OTHERWISE NOTED

AS BUILT REVISIONS

SIGNATURE DATE

INTERSTATE 481 SB
OVER
CSX RAILROAD YARD
PIER 5

STATE OF NEW YORK
DEPARTMENT OF TRANSPORTATION

FILENAME	REGION	DATE	DRAWING NO.
305613AE.P5A	3	10/02	PR17-8S

DESIGN SUPERVISOR ____ JOB MANAGER ____ DESIGNED BY ____ DRAFTED BY ____ CHECKED BY ____ ESTIMATED BY ____ CHECKED BY ____

FED ROAD REG. NO.	STATE	CONTRACT NO.	SHEET NO.	TOTAL SHEETS
1	N.Y.	D259214	305	432

BRIDGE REHABILITATION PROJECT (ELEMENT SPECIFIC)
VARIOUS BRIDGES ON INTERSTATE 481
TOWNS OF DEWITT AND CICERO
COUNTY OF ONONDAGA
P.I.N. 305613 B.I.N. 1093571

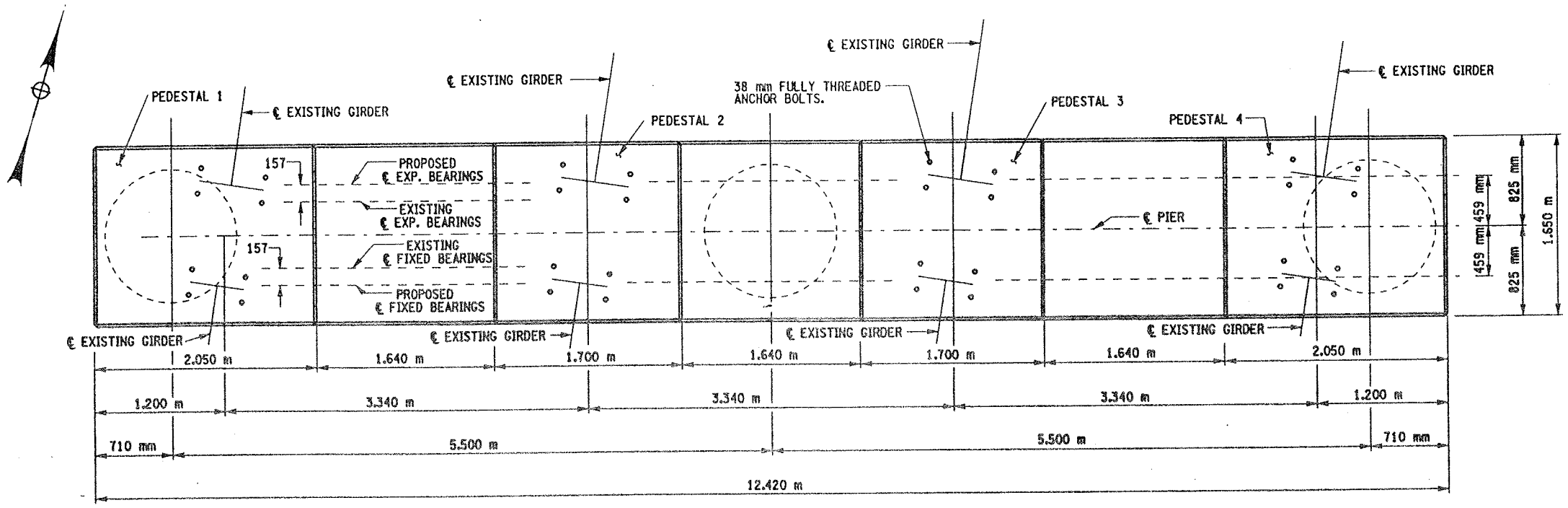

PROPOSED
PLAN
SCALE 1:25

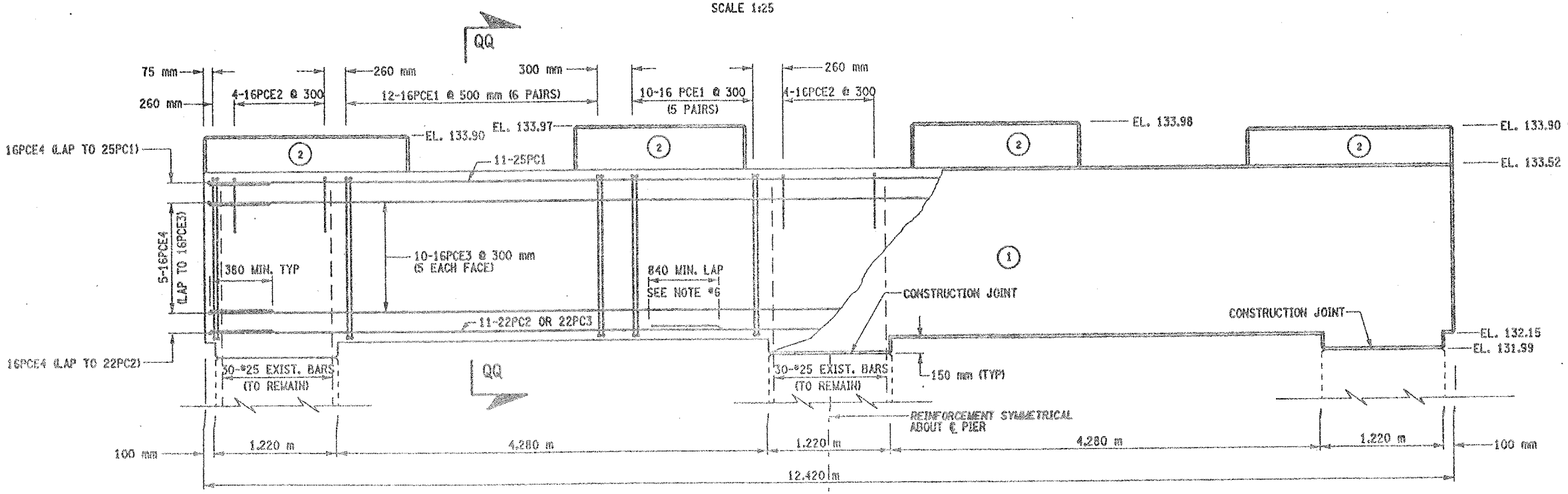

(NO.) INDICATES CONCRETE PLACEMENT NUMBER

PROPOSED
ELEVATION
SCALE 1:25

CONCRETE TABLE (m³)		
PLACEMENT	QUANTITY	ITEM NO.
1	5.12	555.09M
2	28.60	555.09M

NOTES:

1. THESE ELEVATIONS MAY HAVE TO BE ADJUSTED TO ACCOMMODATE THE ACTUAL BEARINGS FURNISHED. IT IS THE RESPONSIBILITY OF THE CONTRACTOR TO COORDINATE ANY CHANGES IN THE BEARINGS WHICH MAY AFFECT THE PEDESTAL ELEVATIONS OR DIMENSIONS.
2. SEE DWG. NO. PR17-7S FOR ANCHOR BOLT LAYOUT, PEDESTAL REINFORCEMENT DETAIL AND SECTION Q-Q FOR CHAMFER DETAIL.
3. SEE DWG. NO. BL-6 FOR BARLIST AND BAR BENDING DIAGRAMS.
4. SEE BR-1 AND BR-2 FOR BEARING DETAILS.
5. CONTRACTOR SHALL REMOVE DEBRIS FROM TOP OF PEDESTALS AND TOP OF CAP BEAM. COST TO BE INCLUDED IN THE PRICE BID FOR VARIOUS OTHER ITEMS OF CONTRACT.
6. REINFORCING BAR LAPS, IF REQUIRED, SHALL BE STAGGERED SO THAT NO MORE THAN 50% OF THE BARS ARE LAPPED AT ANY ONE LOCATION.

LIST OF ITEMS USED:

ITEM 555.09M - CONCRETE FOR STRUCTURES, CLASS HP (CM)
ITEM 556.0201M - UNCOATED BAR REINFORCEMENT FOR CONCRETE STRUC. (KG)
ITEM 556.0202M - EPOXY-COATED BAR REINFORCEMENT FOR STRUC. (KG)

0.5 0 0.5 1 1.5 2 2.5 m
SCALE

ALL DIMENSIONS ARE IN mm UNLESS OTHERWISE NOTED

AS BUILT REVISIONS

SIGNATURE DATE

INTERSTATE 481 SB
OVER
CSX RAILROAD YARD
PIER 5

STATE OF NEW YORK
DEPARTMENT OF TRANSPORTATION

FILENAME	REGION	DATE	DRAWING NO.
305613AE.P5A	3	10/02	PR17-9S

DESIGN SUPERVISOR JOB MANAGER DESIGNED BY DRAFTED BY ESTIMATED BY CHECKED BY

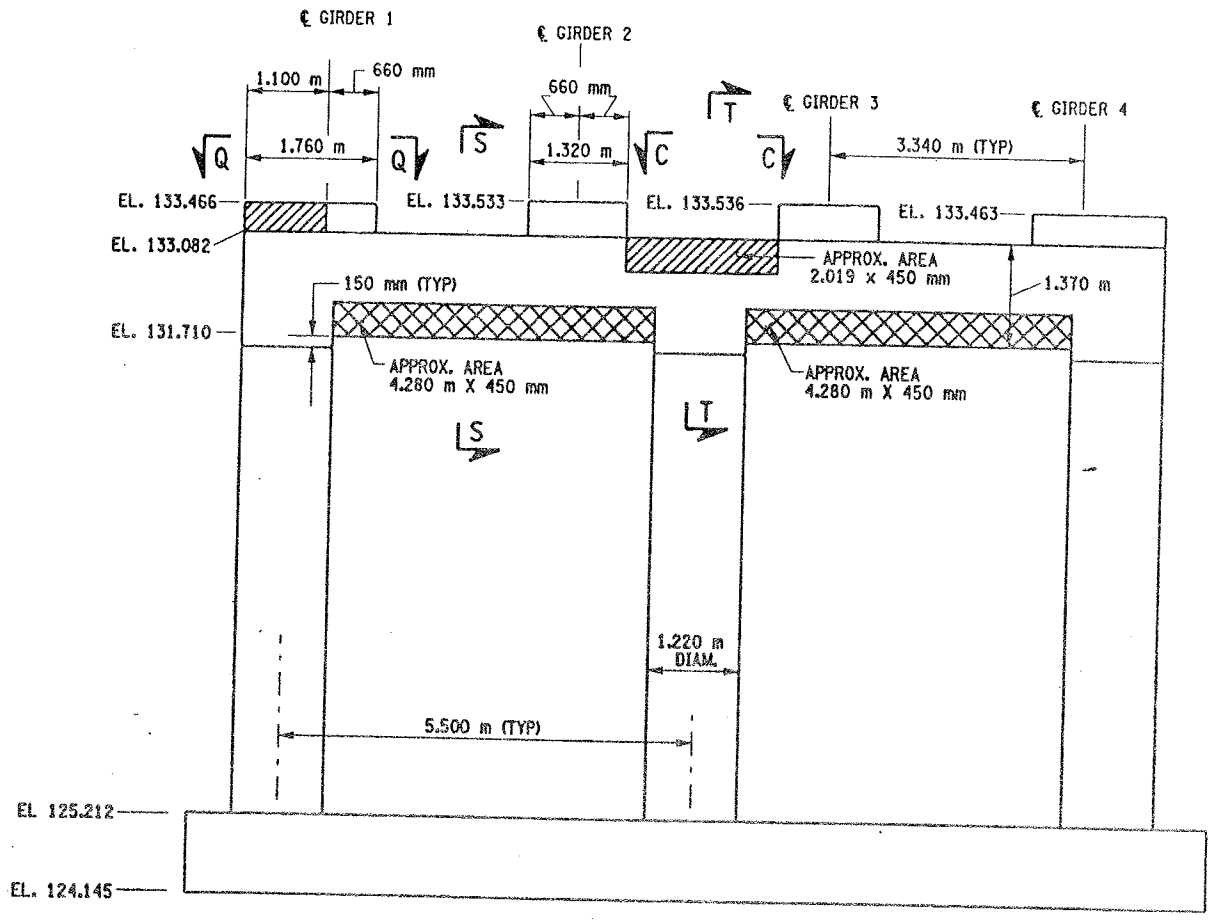

PIER 6 - FRONT FACE (LOOKING NORTH)

BIN 1093571

SCALE: 1 TO 50

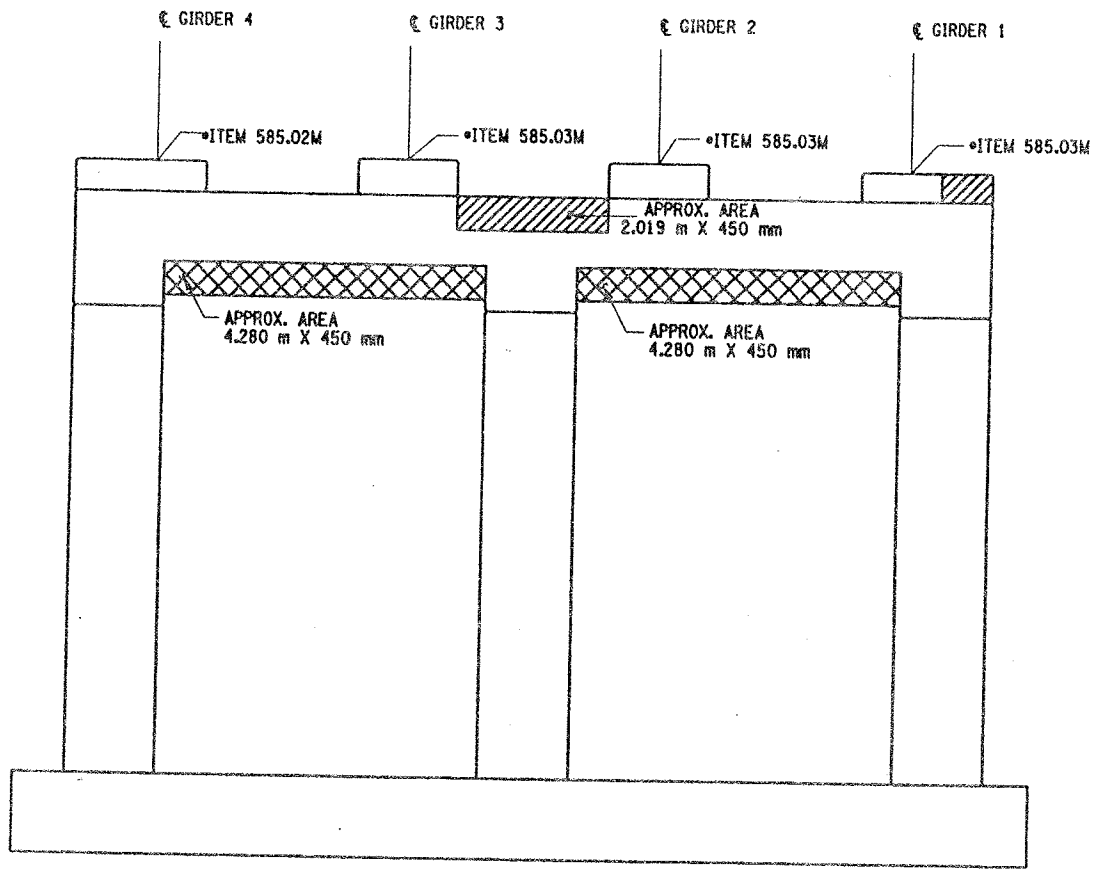

PIER 6- BACK FACE (LOOKING SOUTH)

BIN 1093571

SCALE: 1 TO 50

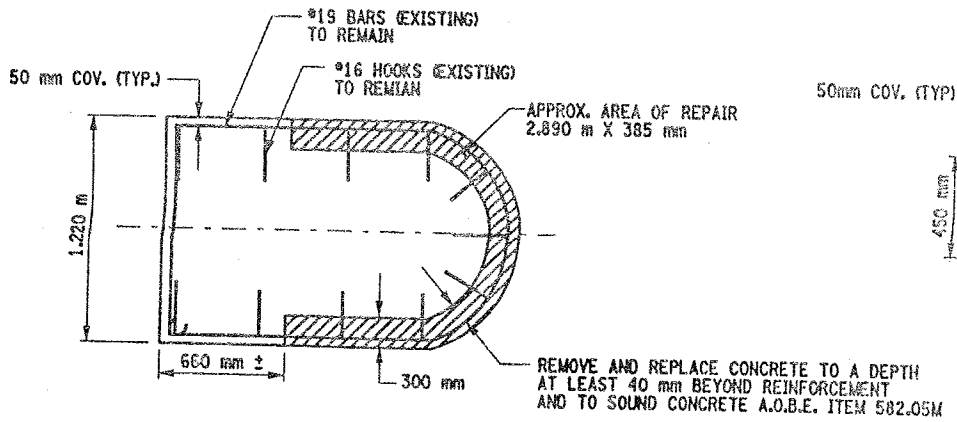

SECTION Q-Q

NOT TO SCALE

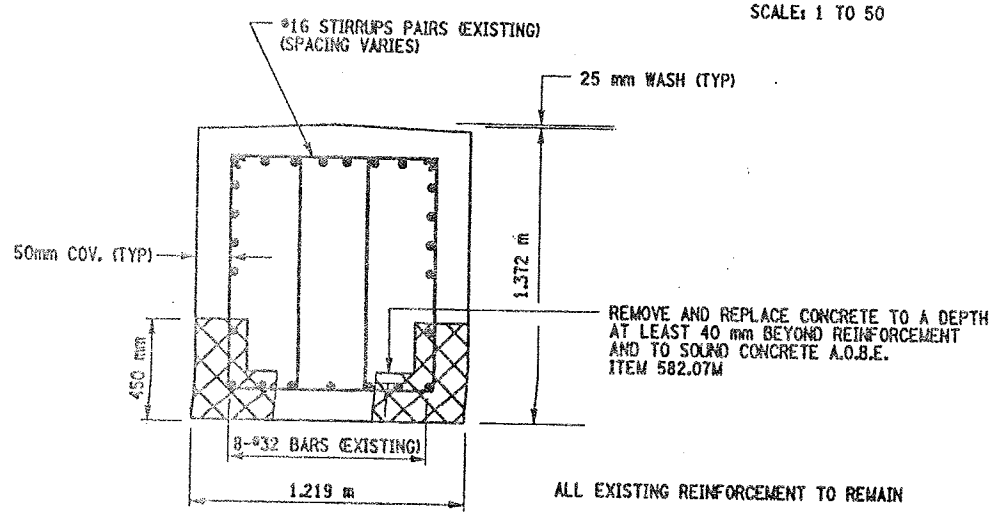

SECTION S-S

NOT TO SCALE

ALL EXISTING REINFORCEMENT TO REMAIN

LIST OF ITEMS USED:

ITEM 15565.4302M - BRIDGE BEARING RESTORATION (EA)
ITEM 582.05M - REM. OF STRUC. CONC. - REPLACE WITH CLASS A CONCRETE (CM)
ITEM 582.07M - REM. OF STRUC. CONC. - REPL. W/ VERT. OVERHEAD PATCH MAT'L (SM)
ITEM 585.02M - STRUCTURAL LIFTING OPERATIONS - TYPE B (EA)
ITEM 585.03M - STRUCTURAL LIFTING OPERATION - TYPE C (EA)

FED ROAD REG. NO.	STATE	CONTRACT NO.	SHEET NO.	TOTAL SHEETS
1	N.Y.	D259214	306	432

BRIDGE REHABILITATION PROJECT (ELEMENT SPECIFIC)

VARIOUS BRIDGES ON INTERSTATE 481

TOWNS OF DEWITT AND CICERO

ONONDAGA COUNTY

P.I.N. 305613 | B.I.N. 1093571

NOTES:

1. ALL REINFORCEMENT TO REMAIN.
2. RESTORE TO ORIGINAL DIMENSIONS.
3. PEDESTALS NUMERICALLY NUMBERED FROM WEST TO EAST.
4. FOR THE CONCRETE REPAIR AREAS, THE CONCRETE SHALL BE REMOVED TO AT LEAST 40mm MIN. BEYOND THE ENCOUNTERED REINFORCEMENT AND TO SOUND CONCRETE, A.O.B.E.
5. ELEVATIONS SHOWN ARE FROM ORIGINAL CONTRACT PLANS F.I.S.H. 70-7 AND ARE FOR REFERENCE ONLY.
6. REMOVAL DIMENSIONS SHOWN ON PLANS ARE ESTIMATED AND SHALL BE FIELD VERIFIED BY THE CONTRACTOR AND ENGINEER PRIOR TO BEGINNING OF REMOVAL OPERATIONS A.O.B.E.
7. PERFORM BEARING RESTORATION TO ALL EXPANSION BEARINGS (TO INCLUDE RESETTING OF UNDEREXTENDED OR OVEREXTENDED BEARINGS). SEE DWG. BR-10 & BR-11 FOR BEARING RESTORATION DETAILS. SEE DWG. PR17-1S FOR BEARING RESTORATION NOTES.
8. SEE DWG. PR17-1S FOR SECTION C-C.
9. SEE DWG. PR17-5N FOR SECTION T-T.
10. ALL CONCRETE REMOVAL SHALL BE SAWCUT TO PRODUCE NEAT REMOVAL LINES. COST TO BE INCLUDED IN THE PRICE BID FOR ITEM 582.05M AND 582.07M.
11. FOR JACKING NOTES SEE DWG PR17-1S.

• PERFORM STRUCTURAL LIFTING UNDER ITEM 585.02M - STRUCTURAL LIFTING OPERATIONS - TYPE B (LIFTING AT A PIER) OR ITEM 585.03M - STRUCTURAL LIFTING OPERATIONS - TYPE C (LIFTING AT A PIER WHERE THE CONTRACTOR SHALL BE REQUIRED TO LIFT OFF THE FOOTING AND/OR GROUND LEVEL.

JACKING LOADS:

D.L. = 75 MT
L.L. = 50 MT
TOTAL = 125 MT

LEGEND:

ITEM 582.05M - REMOVAL OF STRUCTURAL CONCRETE- REPLACE WITH CLASS A CONCRETE (CM)

ITEM 582.07M - REMOVAL OF STRUCTURAL CONCRETE - REPLACE WITH VERTICAL OVERHEAD PATCH MATERIAL. (SM)

ALL DIMENSIONS ARE IN mm UNLESS OTHERWISE NOTED

AS BUILT REVISIONS

SIGNATURE DATE

INTERSTATE 481 SB
OVER
CSX RAILROAD YARD
PIER 6

STATE OF NEW YORK
DEPARTMENT OF TRANSPORTATION

FILENAME	REGION	DATE	DRAWING NO.
305613AE_P6A	3	10/02	PR17-10S

DESIGN SUPERVISOR — JOB MANAGER — DESIGNED BY — CHECKED BY — ESTIMATED BY — DRAFTED BY — CHECKED BY

FED ROAD REG. NO.	STATE	CONTRACT NO.	SHEET NO.	TOTAL SHEETS
1	N.Y.	D259214	307	432

BRIDGE REHABILITATION PROJECT (ELEMENT SPECIFIC)
VARIOUS BRIDGES ON INTERSTATE 481
TOWNS OF DEWITT AND CICERO
ONONDAGA COUNTY
P.I.N. 305613 B.I.N. 1093571

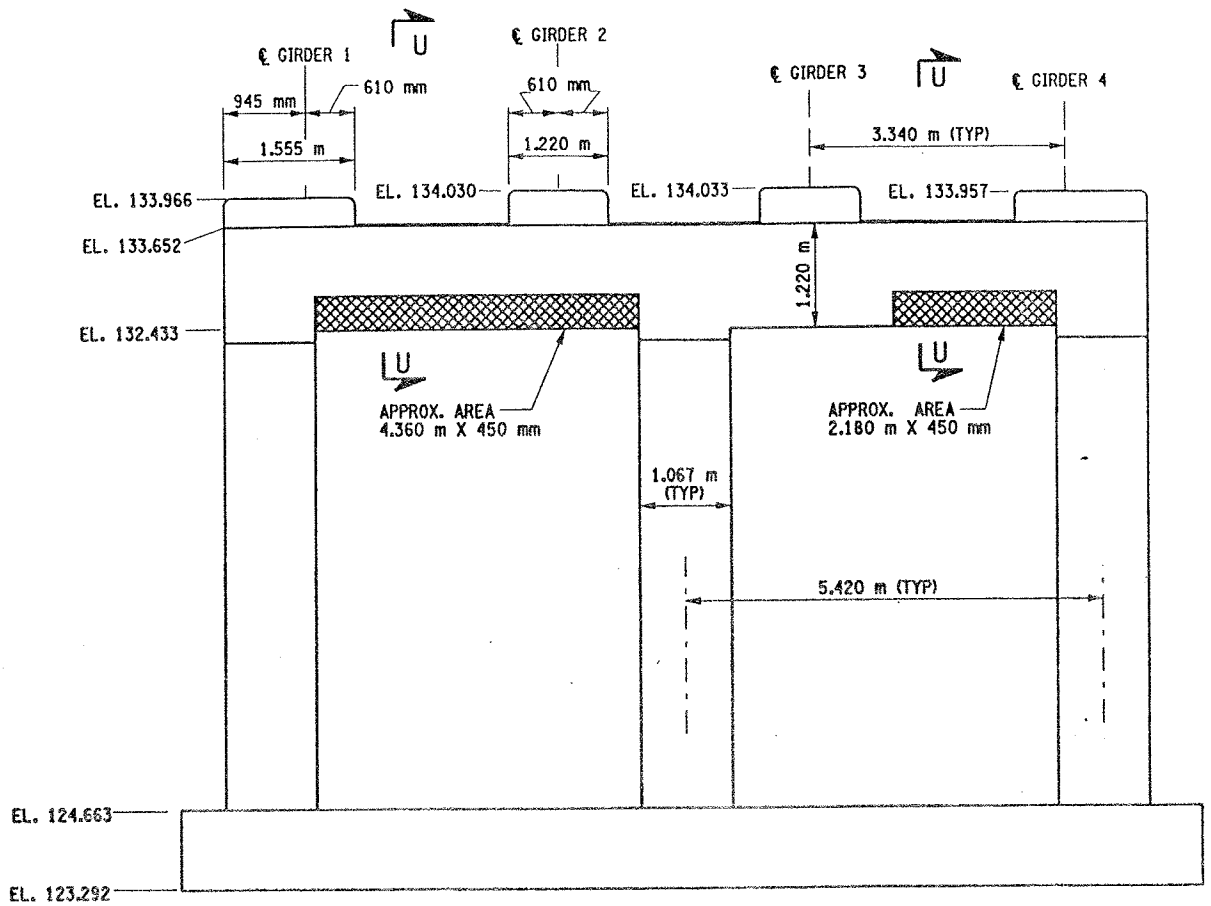

PIER 7 - FRONT FACE LOOKING NORTH
BIN 1093571
SCALE: 1 TO 50

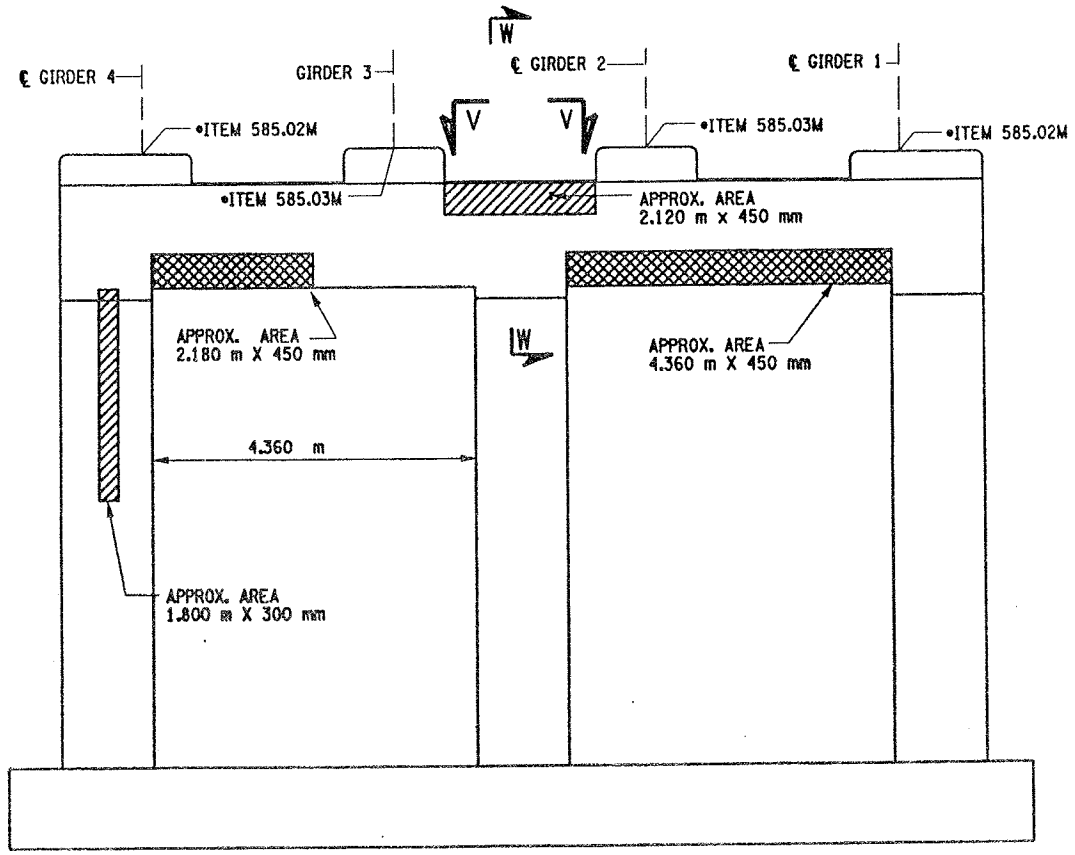

PIER 7 - BACK FACE LOOKING SOUTH
BIN 1093571
SCALE: 1 TO 50

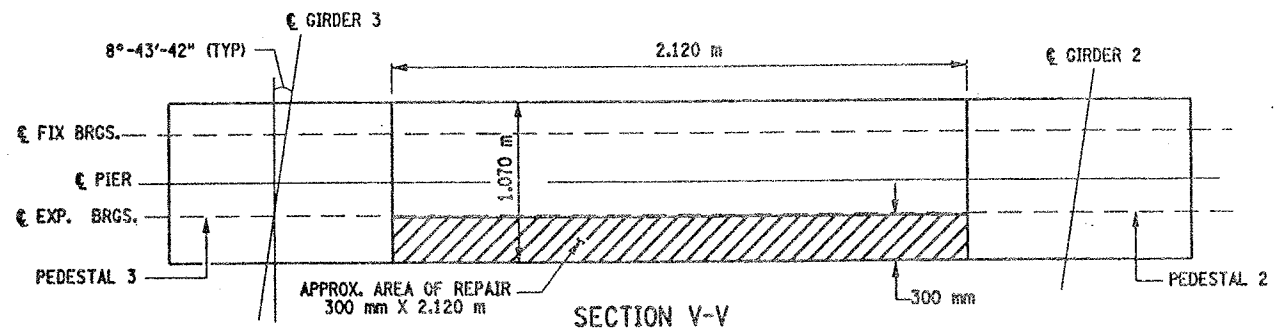

SECTION V-V
NOT TO SCALE

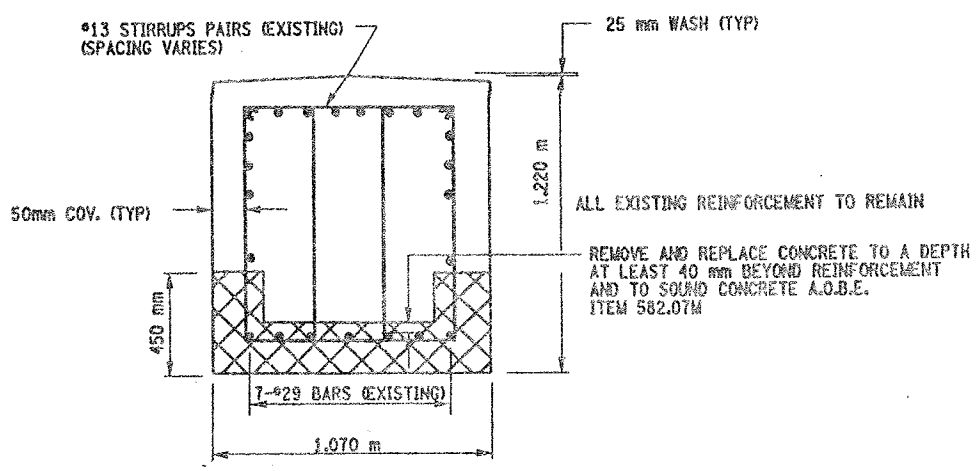

SECTION U-U
NOT TO SCALE

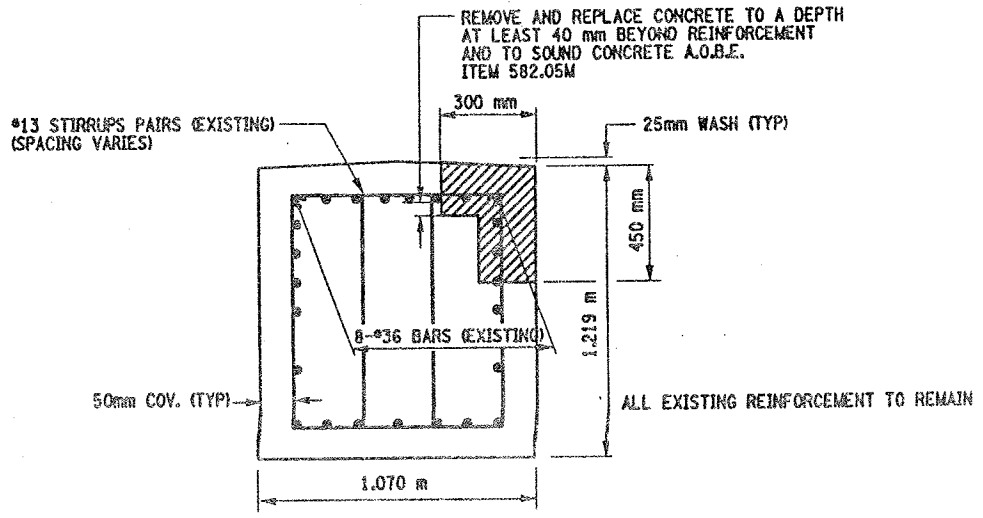

SECTION W-W
NOT TO SCALE

NOTES:

1. ALL REINFORCEMENT TO REMAIN.
2. RESTORE TO ORIGINAL DIMENSIONS.
3. PEDESTALS NUMERICALLY NUMBERED FROM WEST TO EAST.
4. FOR THE CONCRETE REPAIR AREAS, THE CONCRETE SHALL BE REMOVED TO AT LEAST 40mm MIN. BEYOND THE ENCOUNTERED REINFORCEMENT AND TO SOUND CONCRETE, A.O.B.E.
5. ELEVATIONS SHOWN ARE FROM ORIGINAL CONTRACT PLANS F.I.S.H. 70-7 AND ARE FOR REFERENCE ONLY.
6. REMOVAL DIMENSIONS SHOWN ON PLANS ARE ESTIMATED AND SHALL BE FIELD VERIFIED BY THE CONTRACTOR PRIOR TO BEGINNING OF REMOVAL OPERATIONS A.O.B.E.
7. PERFORM BEARING RESTORATION TO ALL EXPANSION BEARINGS (TO INCLUDE RESETTING OF UNDEREXTENDED OR OVEREXTENDED BEARINGS). SEE DWG. PR17-1S FOR BEARING RESTORATION NOTES. SEE DWG. BR-10 & BR-11 FOR BEARING RESTORATION DETAILS.
8. ALL CONCRETE REMOVAL SHALL BE SAWCUT TO PRODUCE NEAT REMOVAL LINES. COST TO BE INCLUDED IN THE PRICE BID FOR ITEM 582.05M AND 582.07M.
9. FOR JACKING NOTES SEE DWG PR17-1S.

• PERFORM STRUCTURAL LIFTING UNDER ITEM 585.02M - STRUCTURAL LIFTING OPERATIONS - TYPE B (LIFTING AT A PIER) OR ITEM 585.03M - STRUCTURAL LIFTING OPERATIONS - TYPE C (LIFTING AT A PIER WHERE THE CONTRACTOR SHALL BE REQUIRED TO LIFT OFF THE FOOTING AND/OR GROUND LEVEL.

JACKING LOADS:

D.L. = 75 MT
L.L. = 50 MT
TOTAL = 125 MT

LEGEND:

ITEM 582.05M - REMOVAL OF STRUCTURAL CONCRETE- REPLACE WITH CLASS A CONCRETE (CM)

ITEM 582.07M - REMOVAL OF STRUCTURAL CONCRETE - REPLACE WITH VERTICAL OVERHEAD PATCH MATERIAL, (SM)

LIST OF ITEMS USED:

ITEM 15565.4302M - BRIDGE BEARING RESTORATION
ITEM 582.05M - REM. OF STRUC. CONC. - REPLACE WITH CLASS A CONCRETE (CM)
ITEM 582.07M - REM. OF STRUC. CONC. - REPL. W/ VERT. OVERHEAD PATCH MAT'L (SM)
ITEM 585.02M - STRUCTURAL LIFTING OPERATIONS - TYPE B (EA)
ITEM 585.03M - STRUCTURAL LIFTING OPERATION - TYPE C (EA)

ALL DIMENSIONS ARE IN mm UNLESS OTHERWISE NOTED

AS BUILT REVISIONS

SIGNATURE DATE

INTERSTATE 481 SB
OVER
CSX RAILROAD YARD
PIER 7

STATE OF NEW YORK
DEPARTMENT OF TRANSPORTATION

FILENAME	REGION	DATE	DRAWING NO.
305613AEJP7A	3	10/02	PR17-11S

DESIGN SUPERVISOR ___ JOB MANAGER ___ DESIGNED BY ___ CHECKED BY ___ DRAFTED BY ___ ESTIMATED BY ___

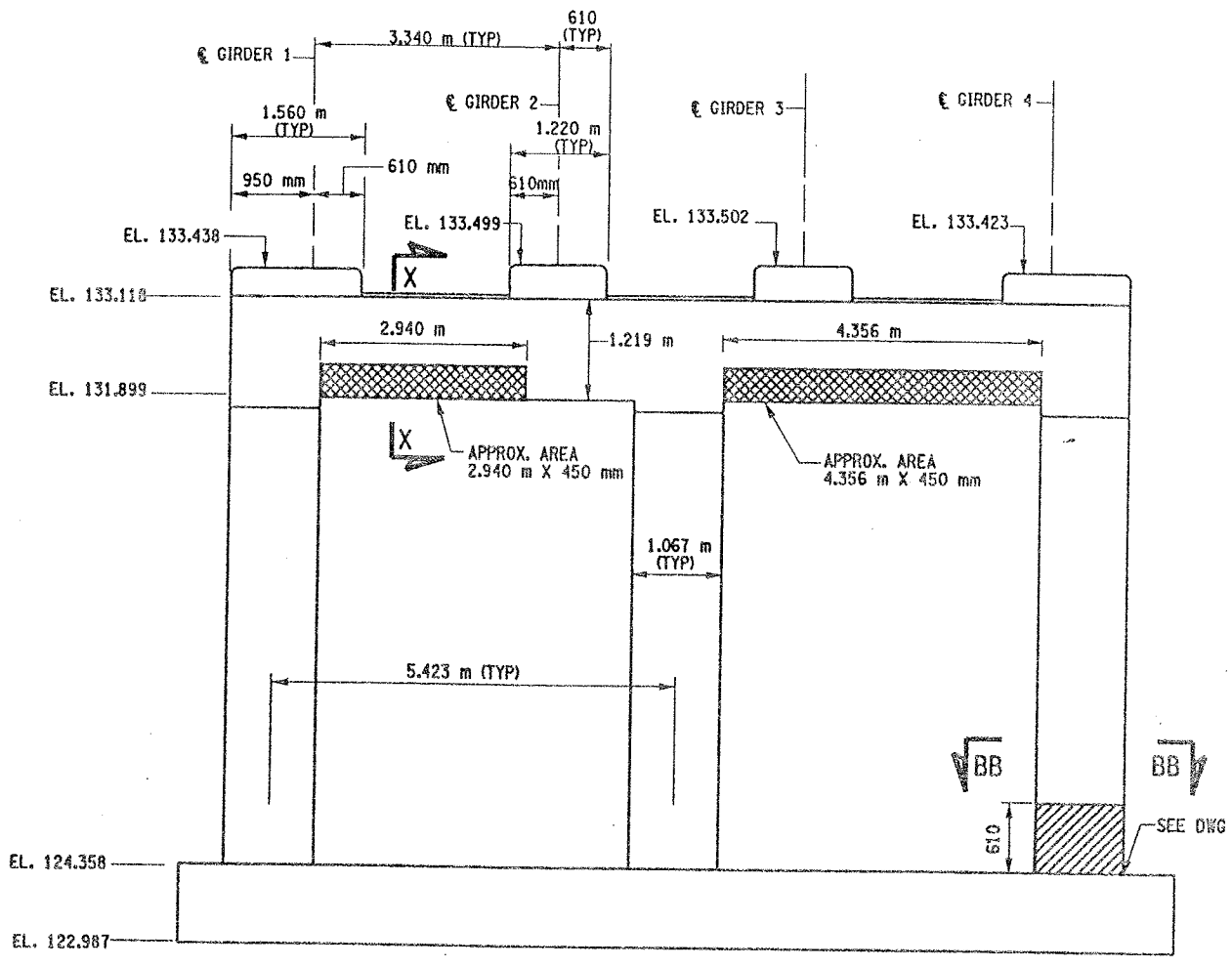

PIER 8 - FRONT FACE (LOOKING NORTH)

BIN 1093571

SCALE: 1 TO 50

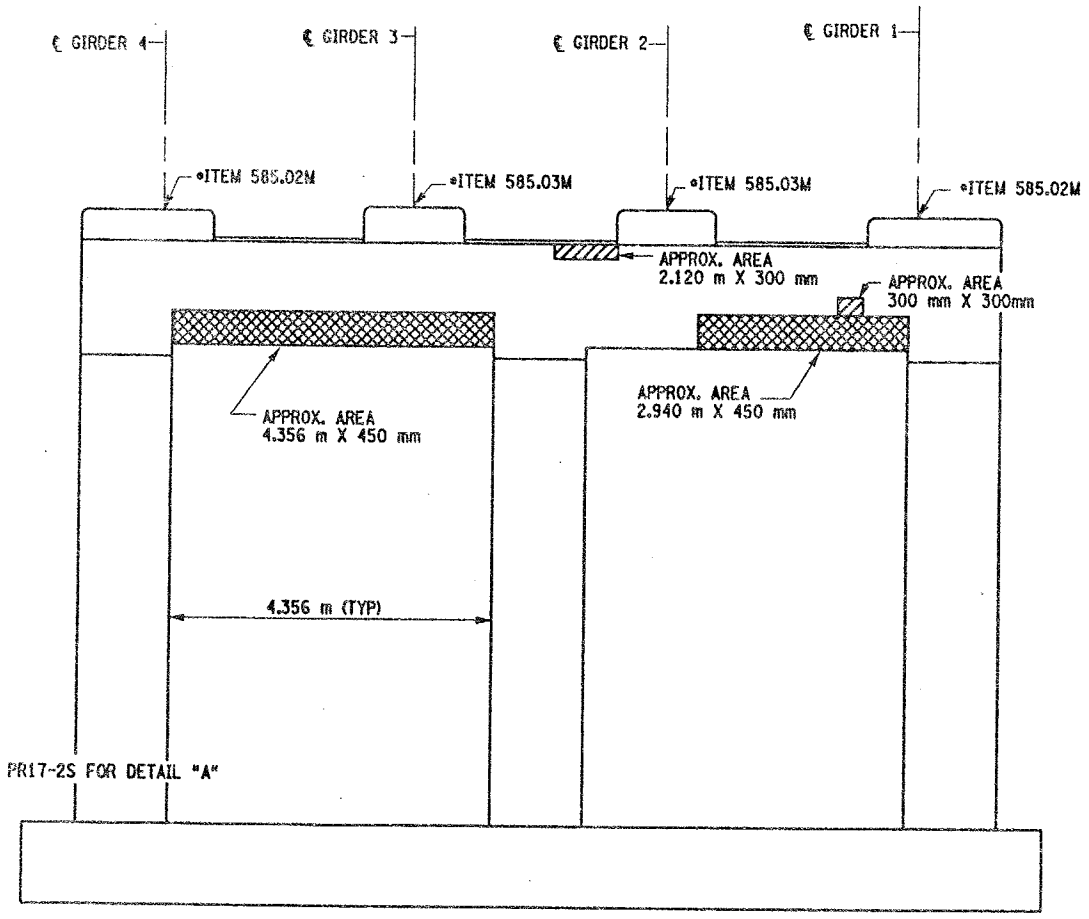

PIER 8 - BACK FACE (LOOKING SOUTH)

BIN 1093571

SCALE: 1 TO 50

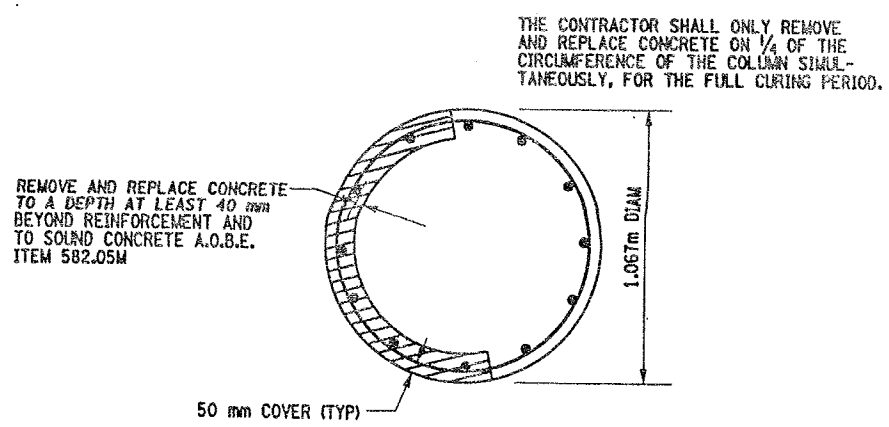

SECTION BB-BB

NOT TO SCALE

LIST OF ITEMS USED:

ITEM 582.05M - REM. OF STRUC. CONC. - REPLACE WITH CLASS A CONCRETE (CM)
ITEM 582.07M - REM. OF STRUC. CONC. - REPL. W/ VERT. OVERHEAD PATCH MAT'L (SM)
ITEM 585.02M - STRUCTURAL LIFTING OPERATIONS - TYPE B (EA)
ITEM 585.03M - STRUCTURAL LIFTING OPERATION - TYPE C (EA)

FED ROAD REG. NO.	STATE	CONTRACT NO.	SHEET NO.	TOTAL SHEETS
1	N.Y.	D259214	308	432

BRIDGE REHABILITATION PROJECT (ELELMENT SPECIFIC)

VARIOUS BRIDGES ON INTERSTATE 481

TOWNS OF DEWITT AND CICERO

ONONDAGA COUNTY

P.I.N. 305613 | B.I.N. 1093571

NOTES:

1. ALL REINFORCEMENT TO REMAIN.
2. RESTORE TO ORIGINAL DIMENSIONS.
3. PEDESTALS NUMERICALLY NUMBERED FROM WEST TO EAST.
4. FOR THE CONCRETE REPAIR AREAS, THE CONCRETE SHALL BE REMOVED TO AT LEAST 40mm MIN. BEYOND THE ENCOUNTERED REINFORCEMENT AND TO SOUND CONCRETE, A.O.B.E.
5. ELEVATIONS SHOWN ARE FROM ORIGINAL CONTRACT PLANS F.I.S.H. 70-7 AND ARE FOR REFERENCE ONLY.
6. REMOVAL DIMENSIONS SHOWN ON PLANS ARE ESTIMATED AND SHALL BE FIELD VERIFIED BY THE CONTRACTOR AND ENGINEER PRIOR TO BEGINNING OF REMOVAL OPERATIONS A.O.B.E.
7. SEE DWG. PR17-7N FOR SECTIONS X-X.
8. ALL CONCRETE REMOVAL SHALL BE SAWCUT TO PRODUCE NEAT REMOVAL LINES. COST TO BE INCLUDED IN THE PRICE BID FOR ITEM 582.05M AND ITEM 582.07M.
9. FOR JACKING NOTES SEE DWG. PR17-1S
10. CONTRACTOR SHALL REMOVE DEBRIS FROM TOP OF PEDESTALS AND TOP OF CAP BEAM. COST TO BE INCLUDED IN THE PRICE BID FOR VARIOUS OTHER ITEMS OF THE CONTRACT.

LEGEND:

ITEM 582.05M - REMOVAL OF STRUCTURAL CONCRETE- REPLACE WITH CLASS A CONCRETE (CM)

ITEM 582.07M - REMOVAL OF STRUCTURAL CONCRETE - REPLACE WITH VERTICAL OVERHEAD PATCH MATERIAL. (SM)

• PERFORM STRUCTURAL LIFTING UNDER ITEM 585.02M - STRUCTURAL LIFTING OPERATIONS - TYPE B (LIFTING AT A PIER) OR ITEM 585.03M - STRUCTURAL LIFTING OPERATIONS - TYPE C (LIFTING AT A PIER WHERE THE CONTRACTOR SHALL BE REQUIRED TO LIFT OFF THE FOOTING AND/OR GROUND LEVEL.

JACKING LOADS:

D.L. = 75 MT
L.L. = 50 MT
TOTAL = 125 MT

ALL DIMENSIONS ARE IN mm UNLESS OTHERWISE NOTED

AS BUILT REVISIONS

SIGNATURE DATE

INTERSTATE 481 SB
OVER
CSX RAILROAD
PIER 8

STATE OF NEW YORK
DEPARTMENT OF TRANSPORTATION

FILENAME	REGION	DATE	DRAWING NO.
305613AE_P8A	3	10/02	PR17-12S

DESIGN SUPERVISOR ____ JOB MANAGER ____ DESIGNED BY ____ CHECKED BY ____ ESTIMATED BY ____ DRAFTED BY ____ CHECKED BY

FED ROAD REG. NO.	STATE	CONTRACT NO.	SHEET NO.	TOTAL SHEETS
1	N.Y.	D259214	309	432

BRIDGE REHABILITATION PROJECT (ELEMENT SPECIFIC)
VARIOUS BRIDGES ON INTERSTATE 481
TOWNS OF DEWITT AND CICERO
ONONDAGA COUNTY
P.I.N. 305613 B.I.N. 1093571

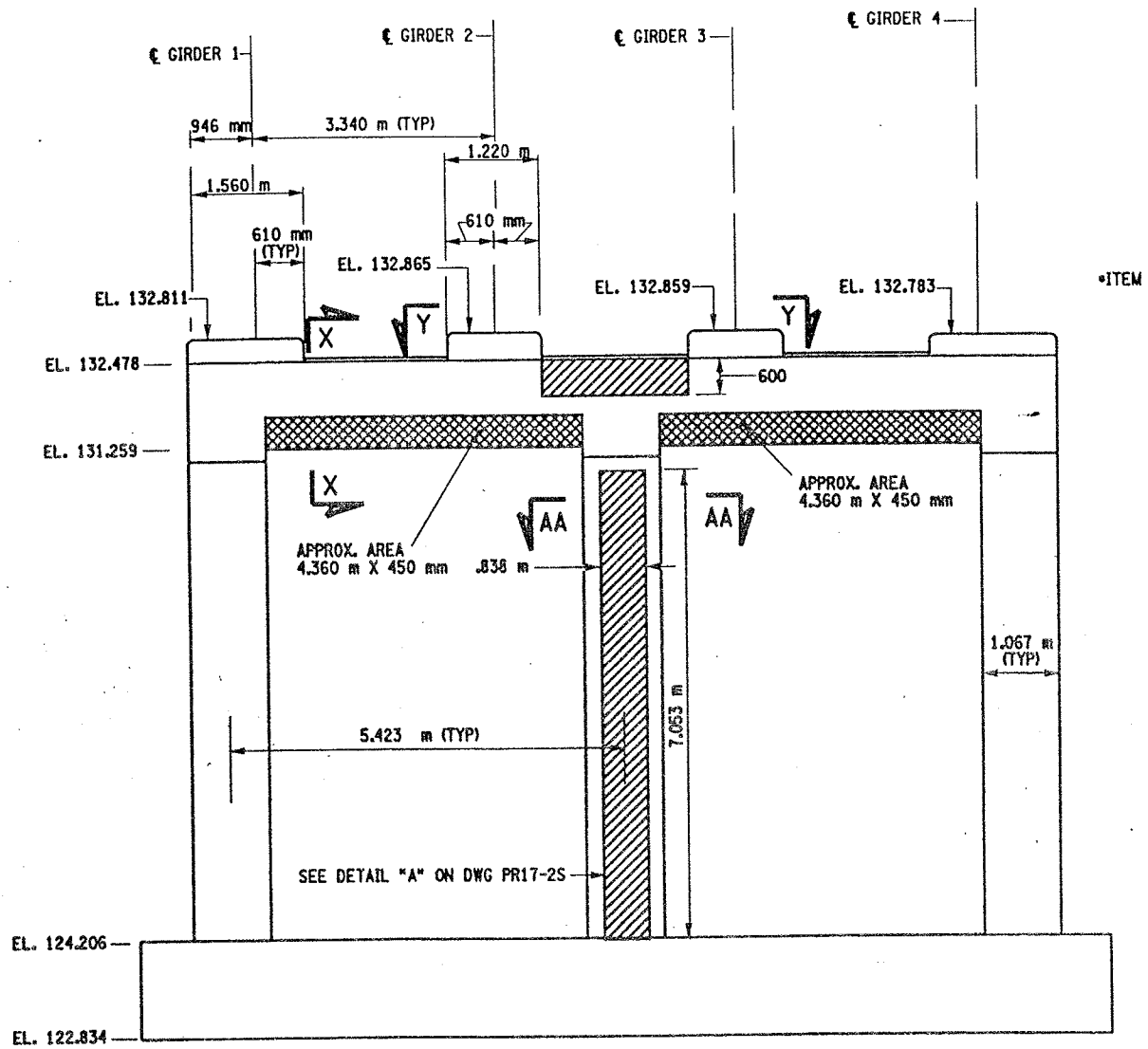

PIER 9 - FRONT FACE (LOOKING NORTH)
BIN 1093571
SCALE: 1 TO 50

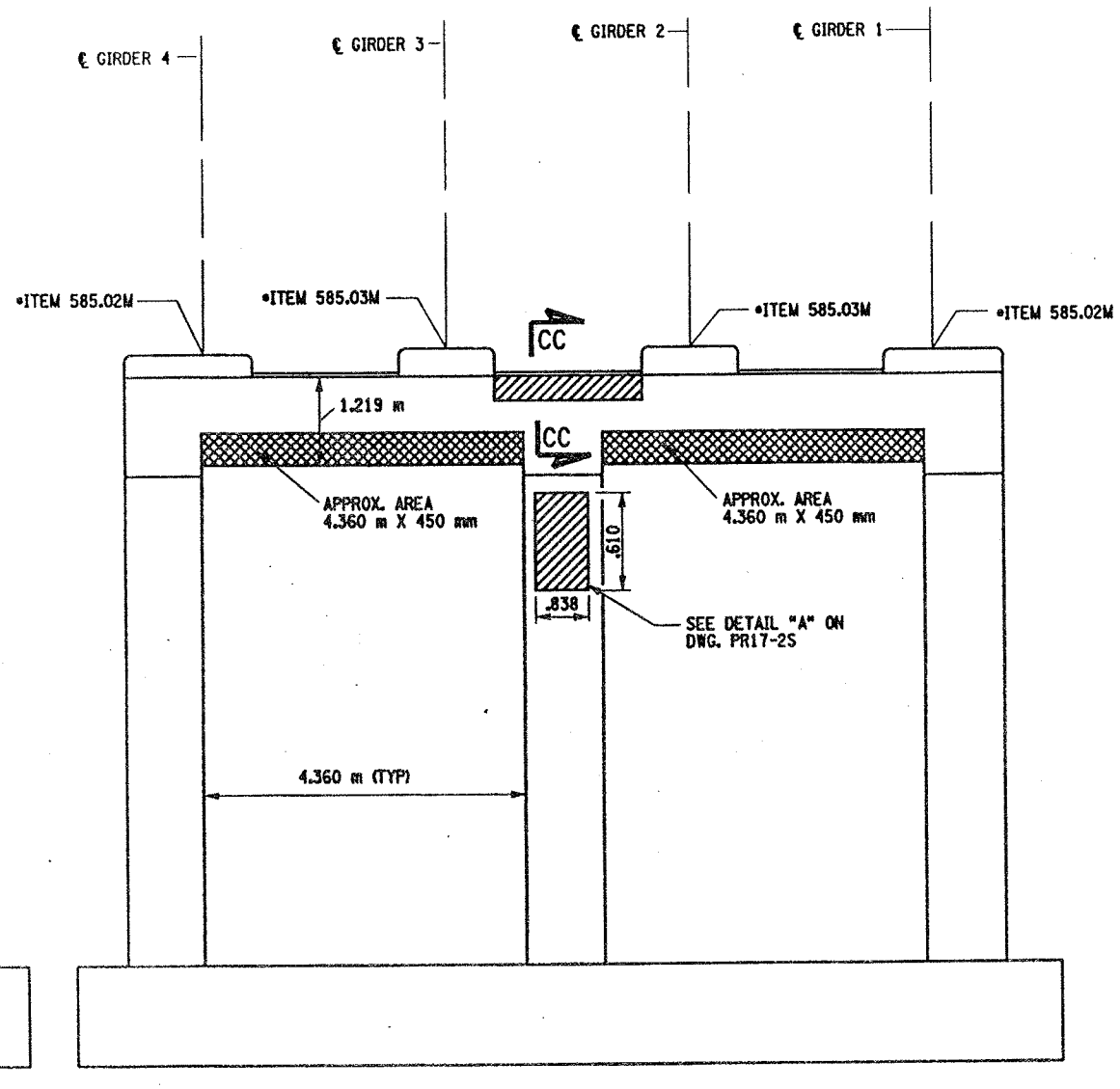

PIER 9 - BACK FACE (LOOKING SOUTH)
BIN 1093571
SCALE: 1 TO 50

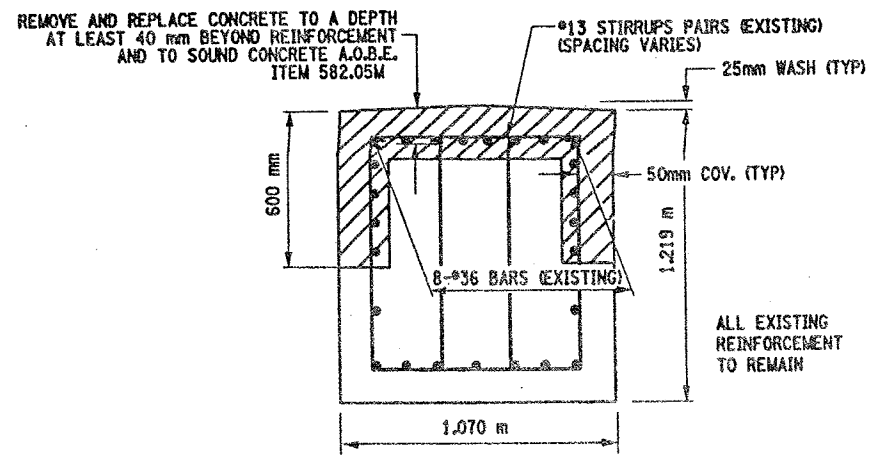

SECTION CC-CC
NOT TO SCALE

NOTES:

1. ALL REINFORCEMENT TO REMAIN.
2. RESTORE TO ORIGINAL DIMENSIONS.
3. PEDESTALS NUMERICALLY NUMBERED FROM WEST TO EAST.
4. FOR THE CONCRETE REPAIR AREAS, THE CONCRETE SHALL BE REMOVED TO AT LEAST 40mm MIN. BEYOND THE ENCOUNTERED REINFORCEMENT AND TO SOUND CONCRETE, A.O.B.E.
5. ELEVATIONS SHOWN ARE FROM ORIGINAL CONTRACT PLANS F.I.S.H. 70-7 AND ARE FOR REFERENCE ONLY.
6. REMOVAL DIMENSIONS SHOWN ON PLANS ARE ESTIMATED AND SHALL BE FIELD VERIFIED BY THE CONTRACTOR PRIOR TO BEGINNING OF REMOVAL OPERATIONS A.O.B.E.
7. PERFORM BEARING RESTORATION TO ALL EXPANSION BEARINGS (TO INCLUDE RESETTING OF UNDEREXTENDED OR OVEREXTENDED BEARINGS). SEE DWG. PR17-1S FOR BEARING RESTORATION NOTES. SEE DWG. BR-10 & BR-11 FOR BEARING RESTORATION DETAILS.
8. SEE DWG. PR17-7N FOR SECTIONS AA-AA, Y-Y AND X-X.
9. ALL CONCRETE REMOVAL SHALL BE SAWCUT TO PRODUCE NEAT REMOVAL LINES. COST TO BE INCLUDED IN THE PRICE BID FOR ITEM 582.05M AND 582.07M.
10. FOR JACKING NOTES SEE DWG PR17-1S
11. CONTRACTOR SHALL REMOVE DEBRIS FROM TOP OF CAP BEAM. COST TO BE INCLUDED IN THE PRICE BID FOR VARIOUS OTHER ITEMS OF CONTRACT.

• PERFORM STRUCTURAL LIFTING UNDER ITEM 585.02M - STRUCTURAL LIFTING OPERATIONS - TYPE B (LIFTING AT A PIER) OR ITEM 585.03M - STRUCTURAL LIFTING OPERATIONS - TYPE C (LIFTING AT A PIER WHERE THE CONTRACTOR SHALL BE REQUIRED TO LIFT OFF THE FOOTING AND/OR GROUND LEVEL.

JACKING LOADS:

D.L. = 75 MT
L.L. = 50 MT
TOTAL = 125 MT

LEGEND:

ITEM 582.05M - REMOVAL OF STRUCTURAL CONCRETE- REPLACE WITH CLASS A CONCRETE. (CM)

ITEM 582.07M - REMOVAL OF STRUCTURAL CONCRETE - REPLACE WITH VERTICAL OVERHEAD PATCH MATERIAL. (SM)

LIST OF ITEMS USED:

ITEM 15565.4302M - BRIDGE BEARING RESTORATION (EA)
ITEM 582.05M - REM. OF STRUC. CONC. - REPLACE WITH CLASS A CONCRETE (CM)
ITEM 582.07M - REM. OF STRUC. CONC. - REPL. W/ VERT. OVERHEAD PATCH MAT'L. (SM)
ITEM 585.02M - STRUCTURAL LIFTING OPERATIONS - TYPE B (EA)
ITEM 585.03M - STRUCTURAL LIFTING OPERATION - TYPE C (EA)

ALL DIMENSIONS ARE IN mm UNLESS OTHERWISE NOTED

AS BUILT REVISIONS

SIGNATURE DATE

INTERSTATE 481 SB
OVER
CSX RAILROAD YARD
PIER 9

STATE OF NEW YORK
DEPARTMENT OF TRANSPORTATION

FILENAME	REGION	DATE	DRAWING NO.
305613AE.P9A	3	10/02	PR17-13S

DESIGN SUPERVISOR ____ JOB MANAGER ____ DESIGNED BY ____ ESTIMATED BY ____ DRAFTED BY ____ CHECKED BY ____

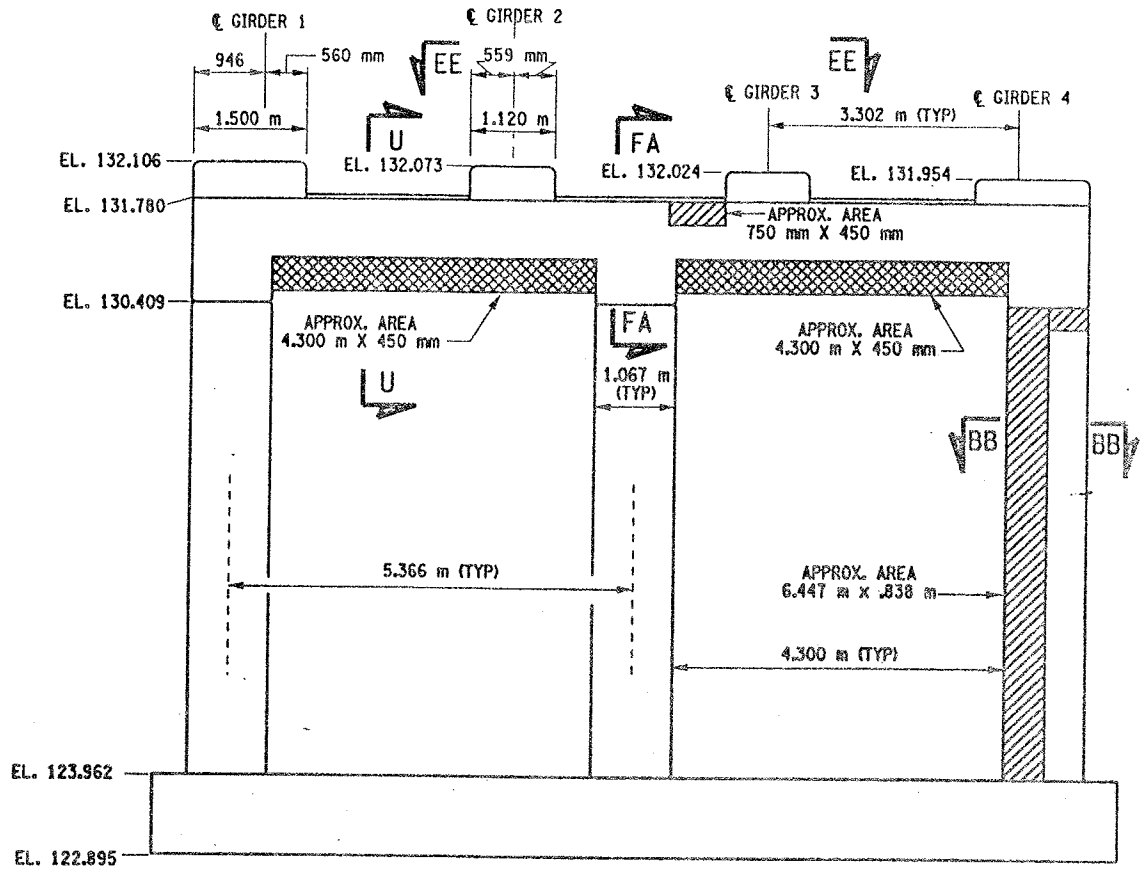

PIER 10 - FRONT FACE (LOOKING NORTH)
BIN 1093571
SCALE: 1 TO 50

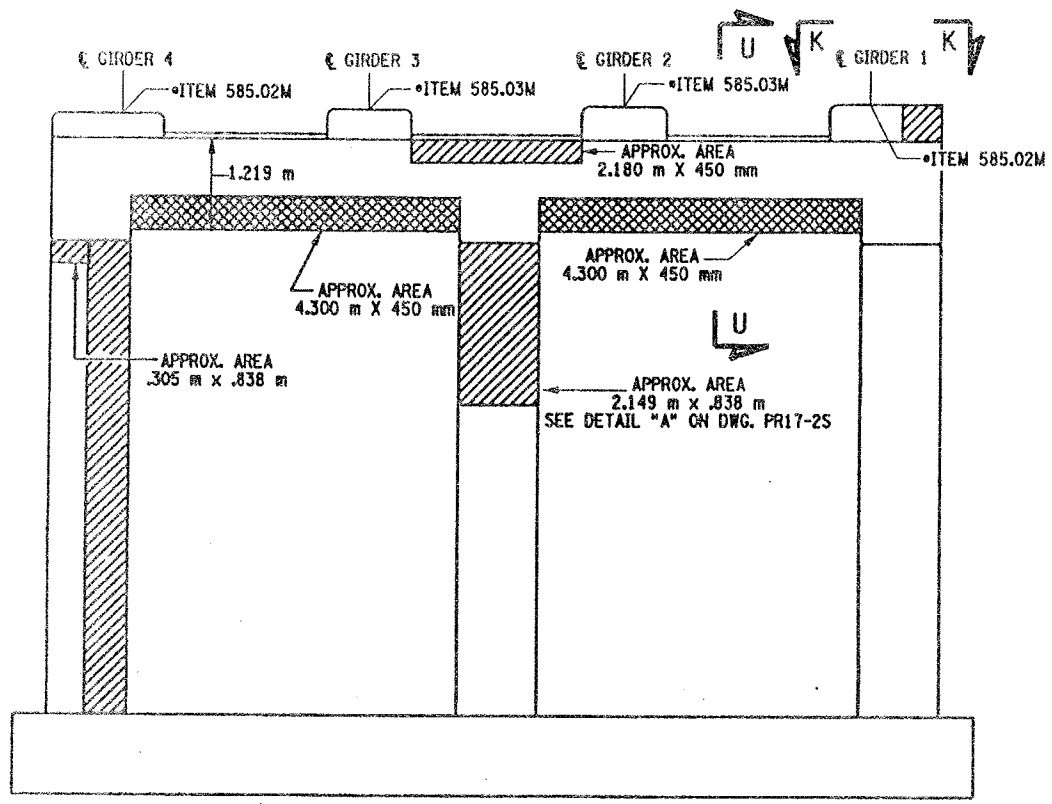

PIER 10 - BACK FACE (LOOKING SOUTH)
BIN 1093571
SCALE: 1 TO 50

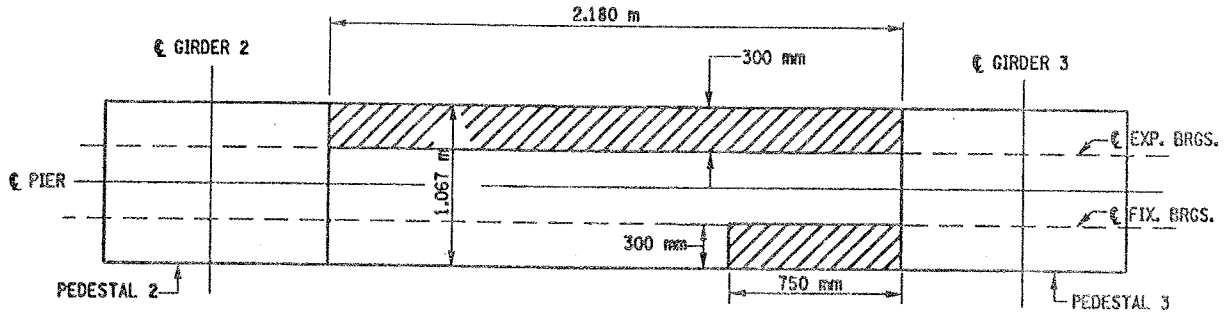

SECTION EE-EE
NOT TO SCALE

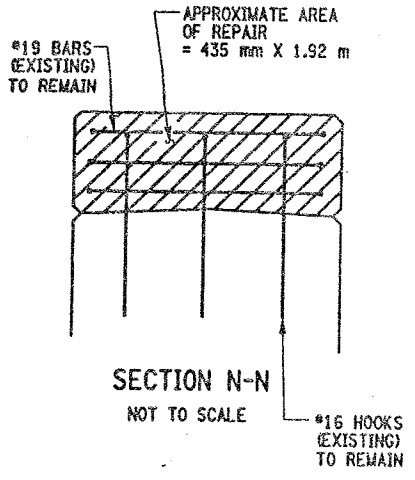

SECTION N-N
NOT TO SCALE

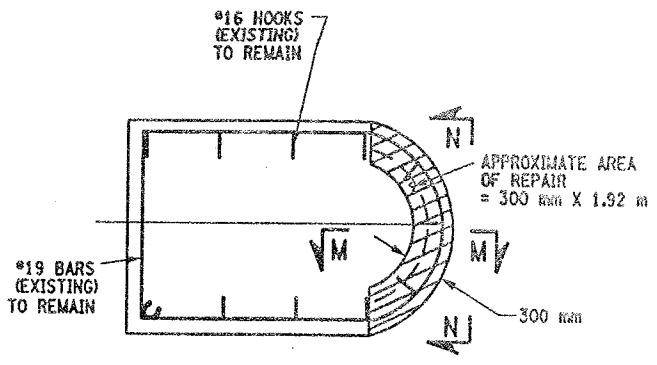

SECTION K-K
NOT TO SCALE

REMOVE AND REPLACE CONCRETE TO A DEPTH
AT LEAST 40 mm BEYOND REINFORCEMENT
AND TO SOUND CONCRETE A.O.B.E.
ITEM 582.05M

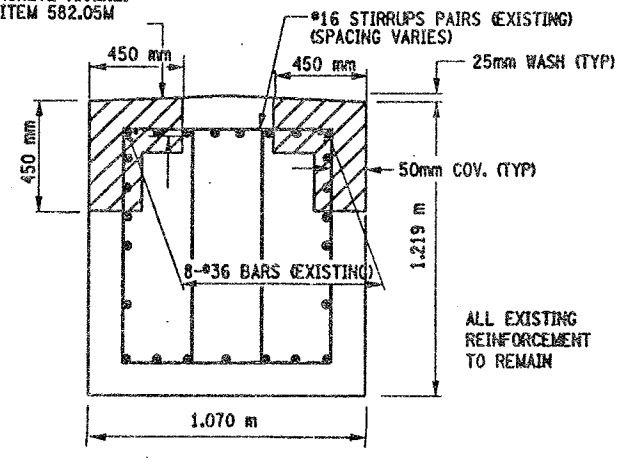

SECTION FA-FA
NOT TO SCALE

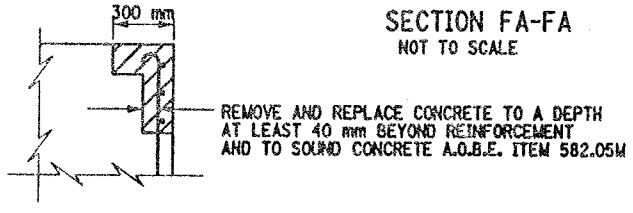

SECTION M-M
NOT TO SCALE

LIST OF ITEMS USED:

ITEM 15565.4302M - BRIDGE BEARING RESTORATION (EA)
ITEM 582.05M - REM. OF STRUC. CONC. - REPLACE WITH CLASS A CONCRETE (CM)
ITEM 582.07M - REM. OF STRUC. CONC. - REPL. W/ VERT. OVERHEAD PATCH MAT'L (SM)
ITEM 585.02M - STRUCTURAL LIFTING OPERATIONS - TYPE B (EA)
ITEM 585.03M - STRUCTURAL LIFTING OPERATION - TYPE C (EA)

FED ROAD REG. NO.	STATE	CONTRACT NO.	SHEET NO.	TOTAL SHEETS
1	N.Y.	D259214	310	432

BRIDGE REHABILITATION PROJECT (ELEMENT SPECIFIC)
VARIOUS BRIDGES ON INTERSTATE 481
TOWNS OF DEWITT AND CICERO
ONONDAGA COUNTY
P.I.N. 305613 B.I.N. 1093571

NOTES:

1. ALL REINFORCEMENT TO REMAIN.
2. RESTORE TO ORIGINAL DIMENSIONS.
3. PEDESTALS NUMERICALLY NUMBERED FROM WEST TO EAST.
4. FOR THE CONCRETE REPAIR AREAS, THE CONCRETE SHALL BE REMOVED TO AT LEAST 40mm MIN. BEYOND THE ENCOUNTERED REINFORCEMENT AND TO SOUND CONCRETE, A.O.B.E.
5. ELEVATIONS SHOWN ARE FROM ORIGINAL CONTRACT PLANS F.I.S.H. 70-7 AND ARE FOR REFERENCE ONLY.
6. REMOVAL DIMENSIONS SHOWN ON PLANS ARE ESTIMATED AND SHALL BE FIELD VERIFIED BY THE CONTRACTOR PRIOR TO BEGINNING OF REMOVAL OPERATIONS A.O.B.E.
7. PERFORM BEARING RESTORATION TO ALL EXPANSION BEARINGS (TO INCLUDE RESETTING OF UNDEREXTENDED OR OVEREXTENDED BEARINGS). SEE DWG. PR17-1S FOR BEARING RESTORATION NOTES. SEE DWG. BR-10 & BR-11 FOR BEARING RESTORATION DETAILS.
8. SEE DWG. PR17-12S FOR SECTION BB-BB.
9. ALL CONCRETE REMOVAL SHALL BE SAWCUT TO PRODUCE NEAT REMOVAL LINES. COST TO BE INCLUDED IN THE PRICE BID FOR ITEM 582.05M AND 582.07M.
10. FOR JACKING NOTES SEE DWG PR17-1S.
11. SEE DWG. PR-17-11S FOR SECTION U-U.

• PERFORM STRUCTURAL LIFTING UNDER ITEM 585.02M - STRUCTURAL LIFTING OPERATIONS - TYPE B (LIFTING AT A PIER) OR ITEM 585.03M - STRUCTURAL LIFTING OPERATIONS - TYPE C (LIFTING AT A PIER WHERE THE CONTRACTOR SHALL BE REQUIRED TO LIFT OFF THE FOOTING AND/OR GROUND LEVEL.

JACKING LOADS:

D.L. = 75 MT
L.L. = 50 MT
TOTAL = 125 MT

LEGEND:

ITEM 582.05M - REMOVAL OF STRUCTURAL CONCRETE- REPLACE WITH CLASS A CONCRETE (CM)

ITEM 582.07M - REMOVAL OF STRUCTURAL CONCRETE - REPLACE WITH VERTICAL OVER-HEAD PATCH MATERIAL. (SM)

ALL DIMENSIONS ARE IN mm UNLESS OTHERWISE NOTED

AS BUILT REVISIONS

SIGNATURE DATE

INTERSTATE 481 SB
OVER
CSX RAILROAD YARD
PIER 10

STATE OF NEW YORK
DEPARTMENT OF TRANSPORTATION

FILENAME	REGION	DATE	DRAWING NO.
305613AE.P10	3	10/02	PR17-14S

DESIGN SUPERVISOR ____ JOB MANAGER ____ DESIGNED BY ____ ESTIMATED BY ____ DRAFTED BY ____ CHECKED BY ____ CHECKED BY ____

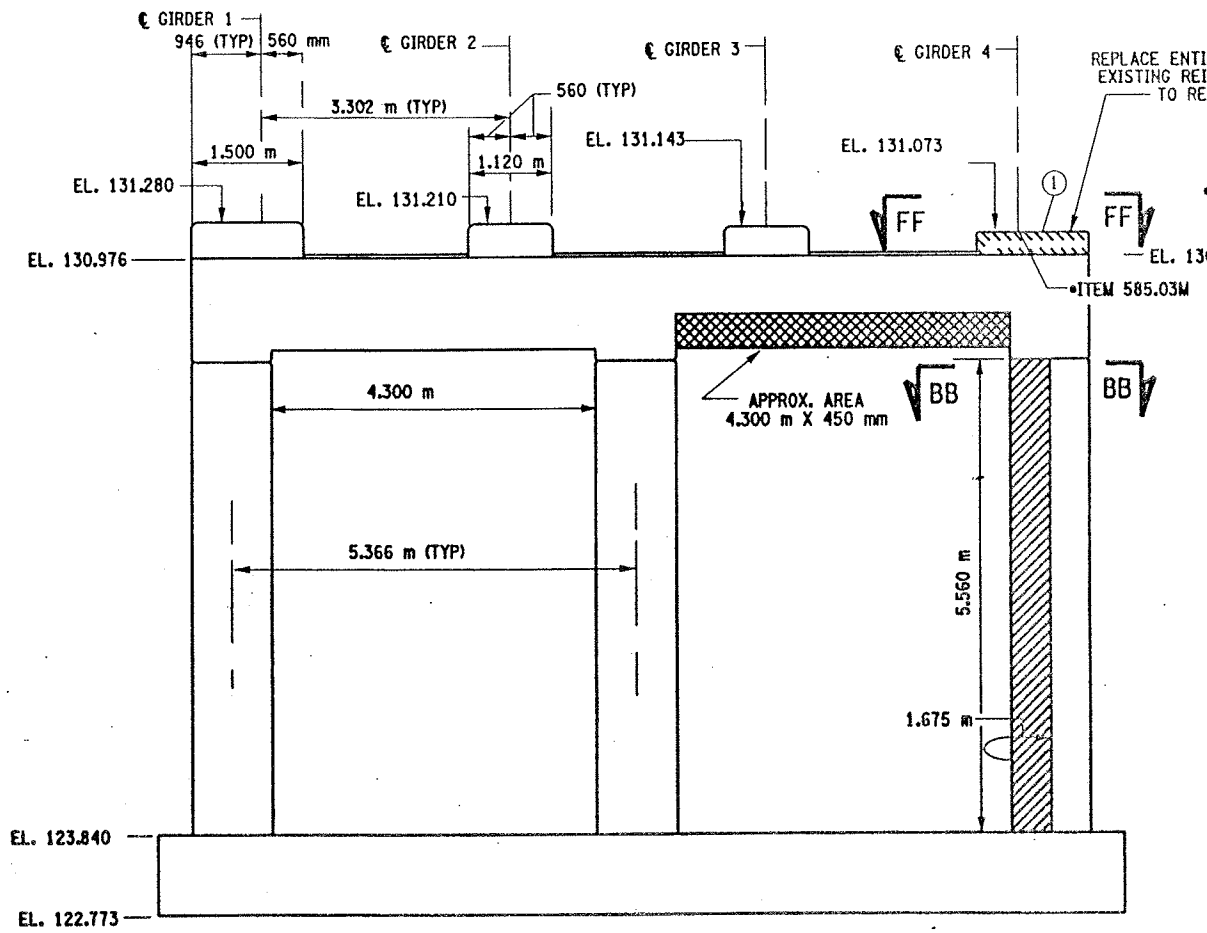

PIER 11 - FRONT FACE (LOOKING NORTH)
BIN 1093571

SCALE: 1 TO 50

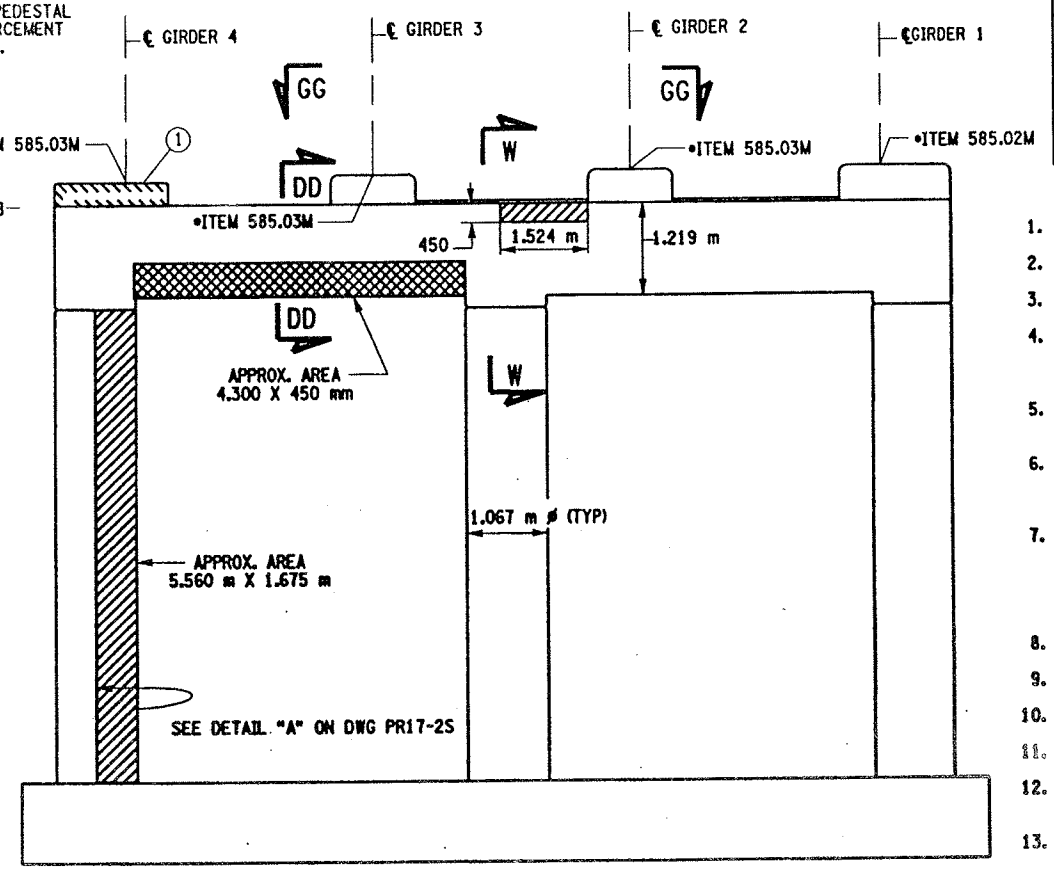

PIER 11 - BACK FACE (LOOKING SOUTH)
BIN 1093571

SCALE: 1 TO 50

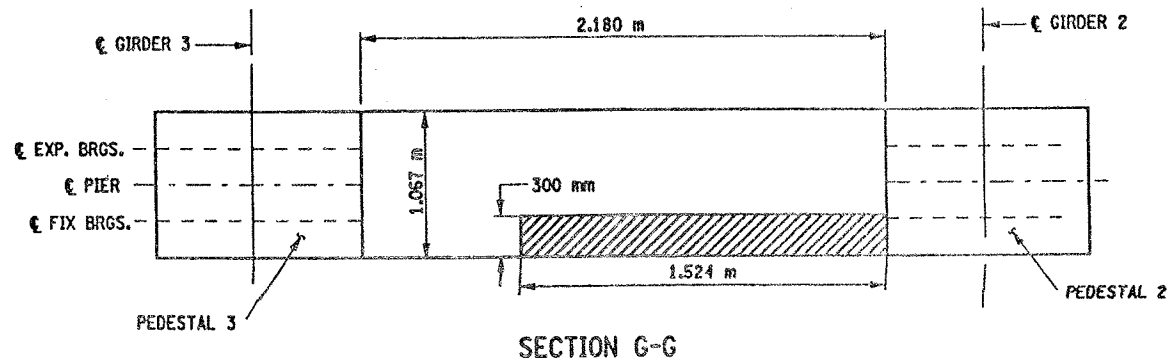

SECTION G-G
NOT TO SCALE

CONCRETE TABLE (m³)		
PLACEMENT	QUANTITY	ITEM NO.
1	0.49	555.0105M

① INDICATES CONCRETE PLACEMENT NUMBER

LIST OF ITEMS USED

ITEM 15565.4302M - BRIDGE BEARING RESTORATION (EA)
ITEM 555.0105M - CONCRETE FOR STRUCTURES, CLASS A (CM)
ITEM 580.01M - REMOVAL OF STRUCTURAL CONCRETE (CM)
ITEM 582.05M - REM. OF STRUC. CONC. - REPLACE WITH CLASS A CONCRETE (CM)
ITEM 582.07M - REM. OF STRUC. CONC. - REPL. W/ VERT. OVERHEAD PATCH MAT.L. (SM)
ITEM 585.02M - STRUCTURAL LIFTING OPERATIONS - TYPE B (EA)
ITEM 585.03M - STRUCTURAL LIFTING OPERATION - TYPE (EA)

FED ROAD REG. NO.	STATE	CONTRACT NO.	SHEET NO.	TOTAL SHEETS
1	N.Y.	D259214	311	432

BRIDGE REHABILITATION PROJECT (ELEMENT SPECIFIC)
VARIOUS BRIDGES ON INTERSTATE 481
TOWNS OF DEWITT AND CICERO
ONONDAGA COUNTY
P.I.N. 305613 | B.I.N. 1093571

NOTES:

1. ALL REINFORCEMENT TO REMAIN.
2. RESTORE TO ORIGINAL DIMENSIONS.
3. PEDESTALS NUMERICALLY NUMBERED FROM WEST TO EAST.
4. FOR THE CONCRETE REPAIR AREAS, THE CONCRETE SHALL BE REMOVED TO AT LEAST 40mm MIN. BEYOND THE ENCOUNTERED REINFORCEMENT AND TO SOUND CONCRETE, A.O.B.E.
5. ELEVATIONS SHOWN ARE FROM ORIGINAL CONTRACT PLANS F.I.S.H. TO-7 AND ARE FOR REFERENCE ONLY.
6. REMOVAL DIMENSIONS SHOWN ON PLANS ARE ESTIMATED AND SHALL BE FIELD VERIFIED BY THE CONTRACTOR PRIOR TO BEGINNING OF REMOVAL OPERATIONS A.O.B.E.
7. PERFORM BEARING RESTORATION TO ALL EXPANSION BEARINGS (TO INCLUDE RESETTING OF UNDEREXTENDED OR OVEREXTENDED BEARINGS). SEE DWG. PR17-1S FOR BEARING RESTORATION NOTES. SEE DWG. BR-10 & BR-11 FOR BEARING RESTORATION DETAILS.
8. SEE DWG. PR17-12S FOR SECTION BB-BB.
9. SEE DWG PR17-10N FOR SECTION DD-DD.
10. SEE DWG PR17-11N FOR SECTION FF-FF.
11. SEE DWG. PR17-11S FOR SECTION W-W.
12. PEDESTAL 4 SHALL BE REPLACED TO EXISITING DIMENSIONS, ITEM 555.0105 M.
13. ALL CONCRETE REMOVAL SHALL BE SAWCUT TO PRODUCE NEAT REMOVAL LINES. COST TO BE INCLUDED IN THE PRICE BID FOR ITEM 582.05M AND ITEM 582.07M.
14. FOR JACKING NOTES SEE DWG. PR17-1S

• PERFORM STRUCTURAL LIFTING UNDER ITEM 585.02M - STRUCTURAL LIFTING OPERATIONS - TYPE B (LIFTING AT A PIER) OR ITEM 585.03M - STRUCTURAL LIFTING OPERATIONS - TYPE C (LIFTING AT A PIER WHERE THE CONTRACTOR SHALL BE REQUIRED TO LIFT OFF THE FOOTING AND/OR GROUND LEVEL.

JACKING LOADS:

D.L. = 75 MT
L.L. = 50 MT
TOTAL = 125 MT

LEGEND:

ITEM 582.05M - REMOVAL OF STRUCTURAL CONCRETE- REPLACE WITH CLASS A CONCRETE. (CM)

ITEM 582.07M - REMOVAL OF STRUCTURAL CONCRETE - REPLACE WITH VERTICAL OVERHEAD PATCH MATERIAL. (SM)

ITEM 580.01 M - REMOVAL OF STRUCTURAL CONCRETE. (CM) AND ITEM 555.0105 M - CONCRETE FOR STRUCTURES CLASS A. (CM)

ALL DIMENSIONS ARE IN mm UNLESS OTHERWISE NOTED

AS BUILT REVISIONS

SIGNATURE DATE

INTERSTATE 481 SB
OVER
CSX RAILROAD YARD
PIER 11

STATE OF NEW YORK
DEPARTMENT OF TRANSPORTATION

FILENAME	REGION	DATE	DRAWING NO.
305613AE.P11	3	10/02	PR17-15S

DESIGN SUPERVISOR ____ JOB MANAGER ____ DESIGNED BY ____ DRAFTED BY ____ CHECKED BY ____ ESTIMATED BY ____

FED ROAD REG. NO.	STATE	CONTRACT NO.	SHEET NO.	TOTAL SHEETS
1	N.Y.	D259214	314	432

BRIDGE REHABILITATION PROJECT (ELEMENT SPECIFIC)
VARIOUS BRIDGES ON INTERSTATE 481
TOWNS OF DEWITT AND CICERO
ONONDAGA COUNTY
P.I.N. 305613 B.I.N. 1093571

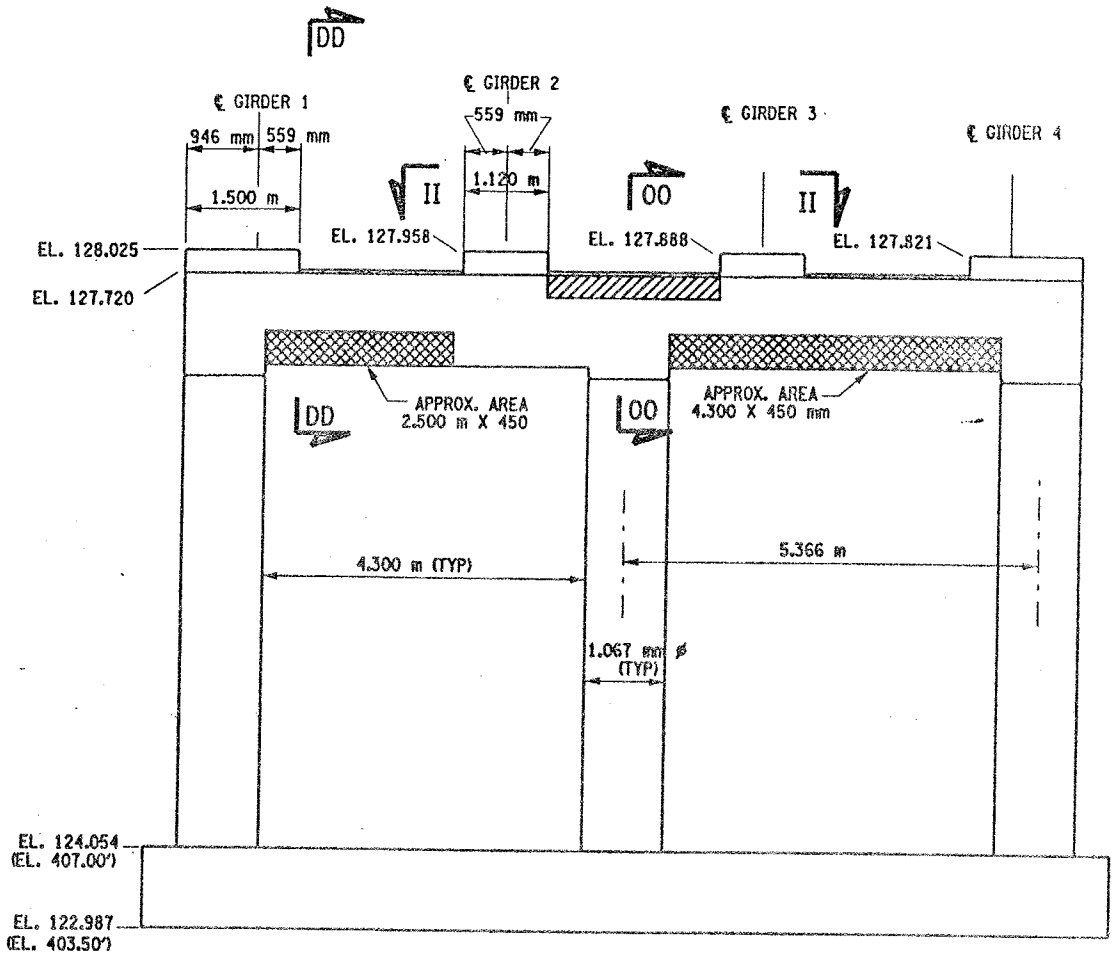

PIER 14 - FRONT FACE (LOOKING NORTH)
BIN 1093571
SCALE: 1 TO 50

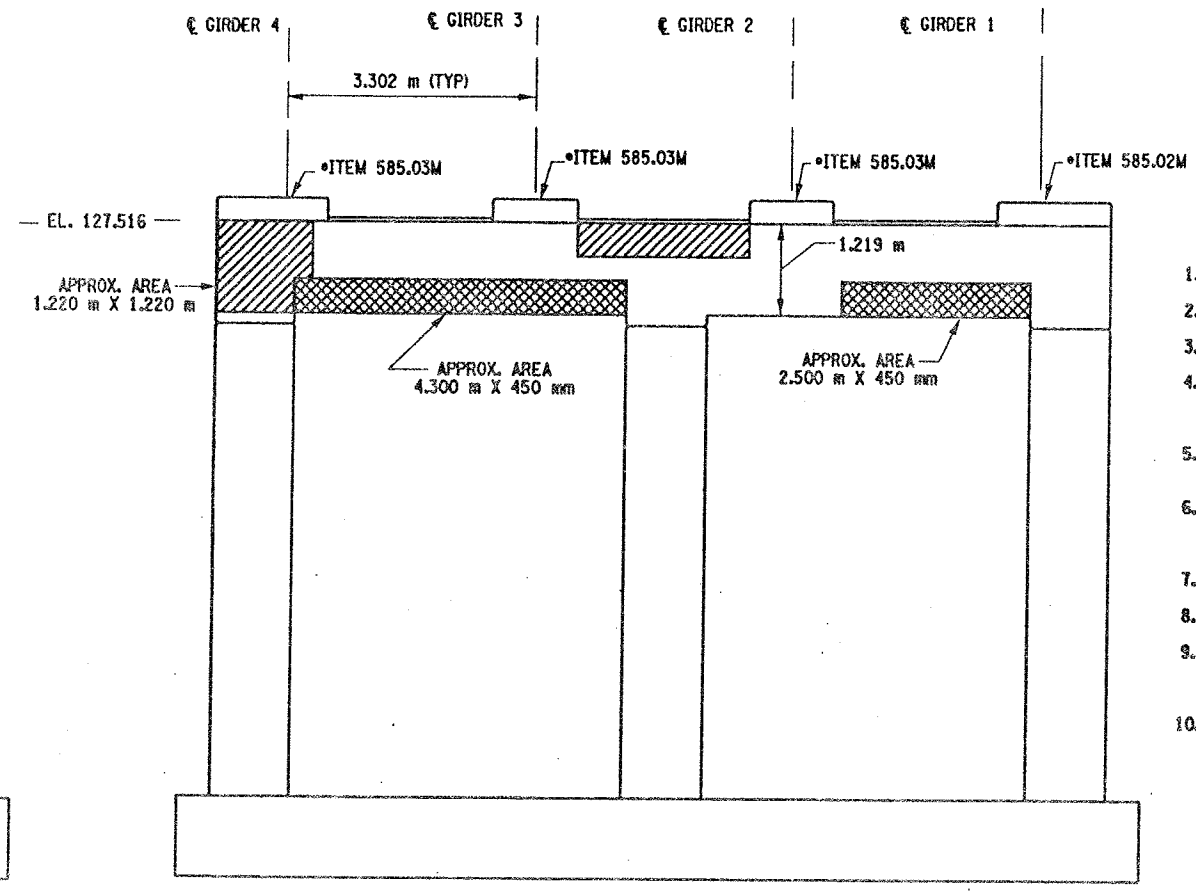

PIER 14 - BACK FACE (LOOKING SOUTH)
BIN 1093571
SCALE: 1 TO 50

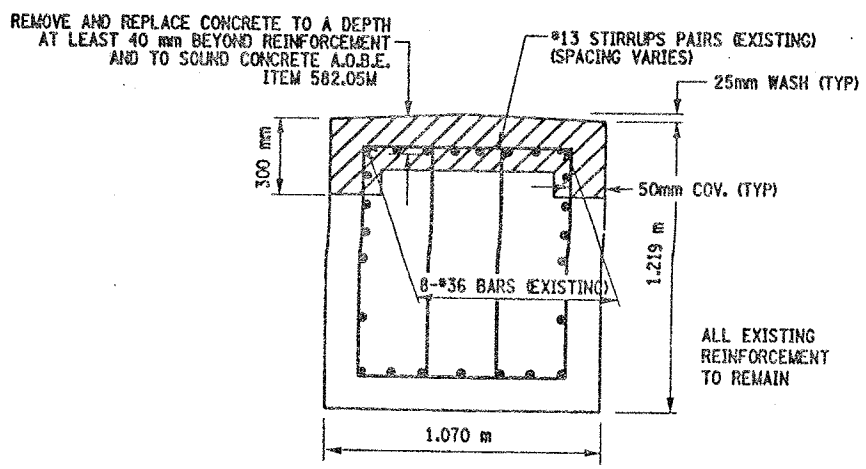

SECTION 00-00
NOT TO SCALE

NOTES:

1. ALL REINFORCEMENT TO REMAIN.
2. RESTORE TO ORIGINAL DIMENSIONS.
3. PEDESTALS NUMERICALLY NUMBERED FROM WEST TO EAST.
4. FOR THE CONCRETE REPAIR AREAS, THE CONCRETE SHALL BE REMOVED TO AT LEAST 40mm MIN. BEYOND THE ENCOUNTERED REINFORCEMENT AND TO SOUND CONCRETE, A.O.B.E.
5. ELEVATIONS SHOWN ARE FROM ORIGINAL CONTRACT PLANS F.I.S.H. 70-7 AND ARE FOR REFERENCE ONLY.
6. REMOVAL DIMENSIONS SHOWN ON PLANS ARE ESTIMATED AND SHALL BE FIELD VERIFIED BY THE CONTRACTOR PRIOR TO BEGINNING OF REMOVAL OPERATIONS A.O.B.E.
7. SEE DWG. PR17-10N FOR SECTION DD-DD.
8. SEE DWG. PR17-16S FOR SECTION II-II.
9. ALL CONCRETE REMOVAL SHALL BE SAWCUT TO PRODUCE NEAT REMOVAL LINES. COST TO BE INCLUDED IN THE PRICE BID FOR ITEM 582.05M AND 582.07M.
10. FOR JACKING NOTES SEE DWG PR17-1S.

• PERFORM STRUCTURAL LIFTING UNDER ITEM 585.02M - STRUCTURAL LIFTING OPERATIONS - TYPE B (LIFTING AT A PIER) OR ITEM 585.03M - STRUCTURAL LIFTING OPERATIONS - TYPE C (LIFTING AT A PIER WHERE THE CONTRACTOR SHALL BE REQUIRED TO LIFT OFF THE FOOTING AND/OR GROUND LEVEL.

JACKING LOADS:

D.L. = 75 MT
L.L. = 50 MT
TOTAL = 125 MT

LEGEND:

ITEM 582.05M - REMOVAL OF STRUCTURAL CONCRETE- REPLACE WITH CLASS A CONCRETE. (CM)

ITEM 582.07M - REMOVAL OF STRUCTURAL CONCRETE - REPLACE WITH VERTICAL OVERHEAD PATCH MATERIAL. (SM)

LIST OF ITEMS USED:

ITEM 582.05M - REM. OF STRUC. CONC. - REPLACE WITH CLASS A CONCRETE (CM)
ITEM 582.07M - REM. OF STRUC. CONC. - REPL. W/ VERT. OVERHEAD PATCH MAT'L (SM)
ITEM 585.02M - STRUCTURAL LIFTING OPERATIONS - TYPE B (EA)
ITEM 585.03M - STRUCTURAL LIFTING OPERATION - TYPE C (EA)

ALL DIMENSIONS ARE IN mm UNLESS OTHERWISE NOTED

AS BUILT REVISIONS

SIGNATURE DATE

INTERSTATE 481 SB
OVER
CSX RAILROAD YARD
PIER 14

STATE OF NEW YORK
DEPARTMENT OF TRANSPORTATION

FILENAME	REGION	DATE	DRAWING NO.
305613AE.P14	3	10/02	PR17-18S

DESIGN SUPERVISOR ____ JOB MANAGER ____ DESIGNED BY ____ DRAFTED BY ____ ESTIMATED BY ____ CHECKED BY ____

FED ROAD REG. NO.	STATE	CONTRACT NO.	SHEET NO.	TOTAL SHEETS
1	N.Y.	D259214	315	432

BRIDGE REHABILITATION PROJECT (ELEMENT SPECIFIC)
VARIOUS BRIDGES ON INTERSTATE 481
TOWN OF DEWITT AND CICERO
ONONDAGA COUNTY
P.I.N. 305613 B.I.N. 1093572

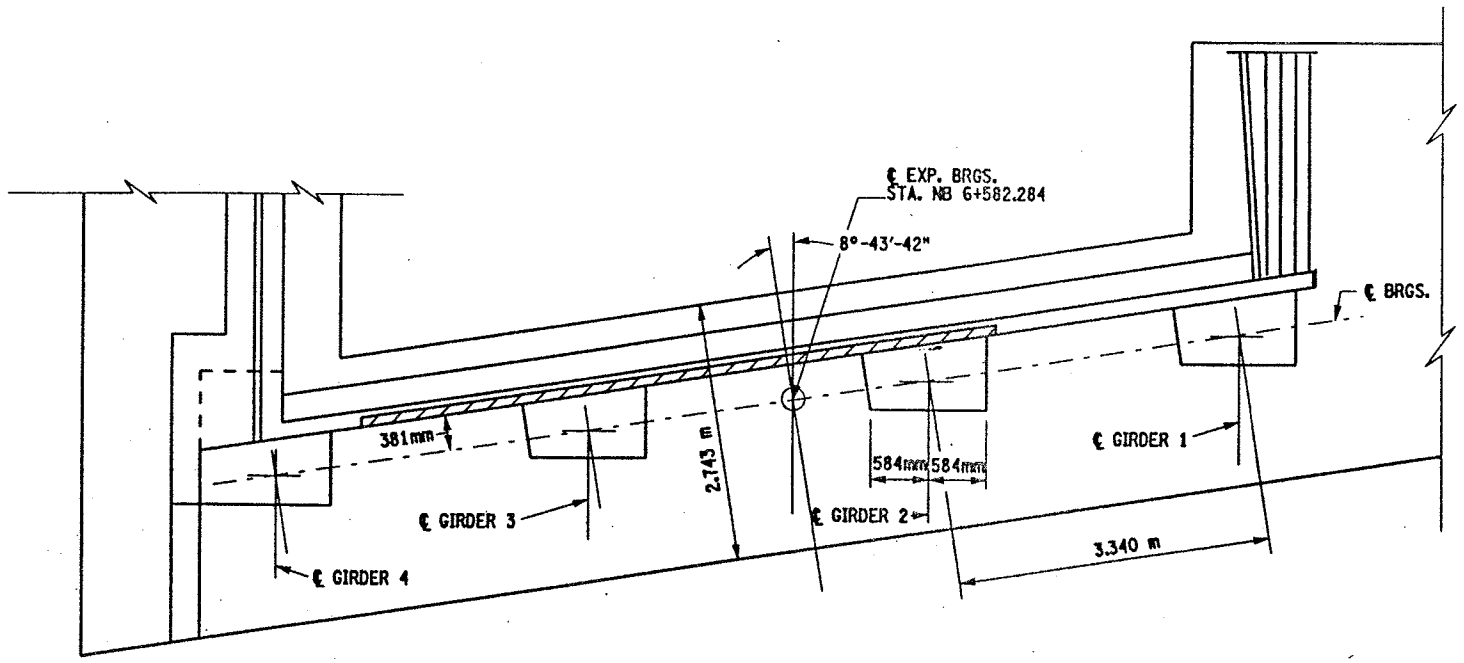

SOUTH ABUTMENT
PLAN

SCALE 1:40

NOTES:

1. ALL DIMENSIONS SHOWN FOR CONCRETE REMOVAL ARE APPROXIMATE AND SHALL BE FIELD VERIFIED BY THE CONTRACTOR AND EIC.
2. REMOVE CONCRETE TO LIMITS SHOWN AS WELL AS TO SOUND CONCRETE, A.O.B.E.
3. WHEN REMOVING EXISTING CONCRETE, SAWCUT 5 mm MIN. TO PRODUCE NEAT REMOVAL LINES. ANY COST TO BE
4. INCLUDED IN THE BID PRICE FOR ITEM 582.05M.
5. ALL EXISTING REINFORCEMENT TO REMAIN.
6. ELEVATIONS ARE GIVEN FOR QUANTITY ESTIMATES ONLY.
7. REFER TO CONTRACT D250094 FOR ORIGINAL CONSTRUCTION DETAILS.

AREAS OF PROPOSED WORK: ITEM 582.05M
REMOVAL OF STRUCTURAL CONCRETE-
REPLACEMENT WITH CLASS A CONCRETE (CM)

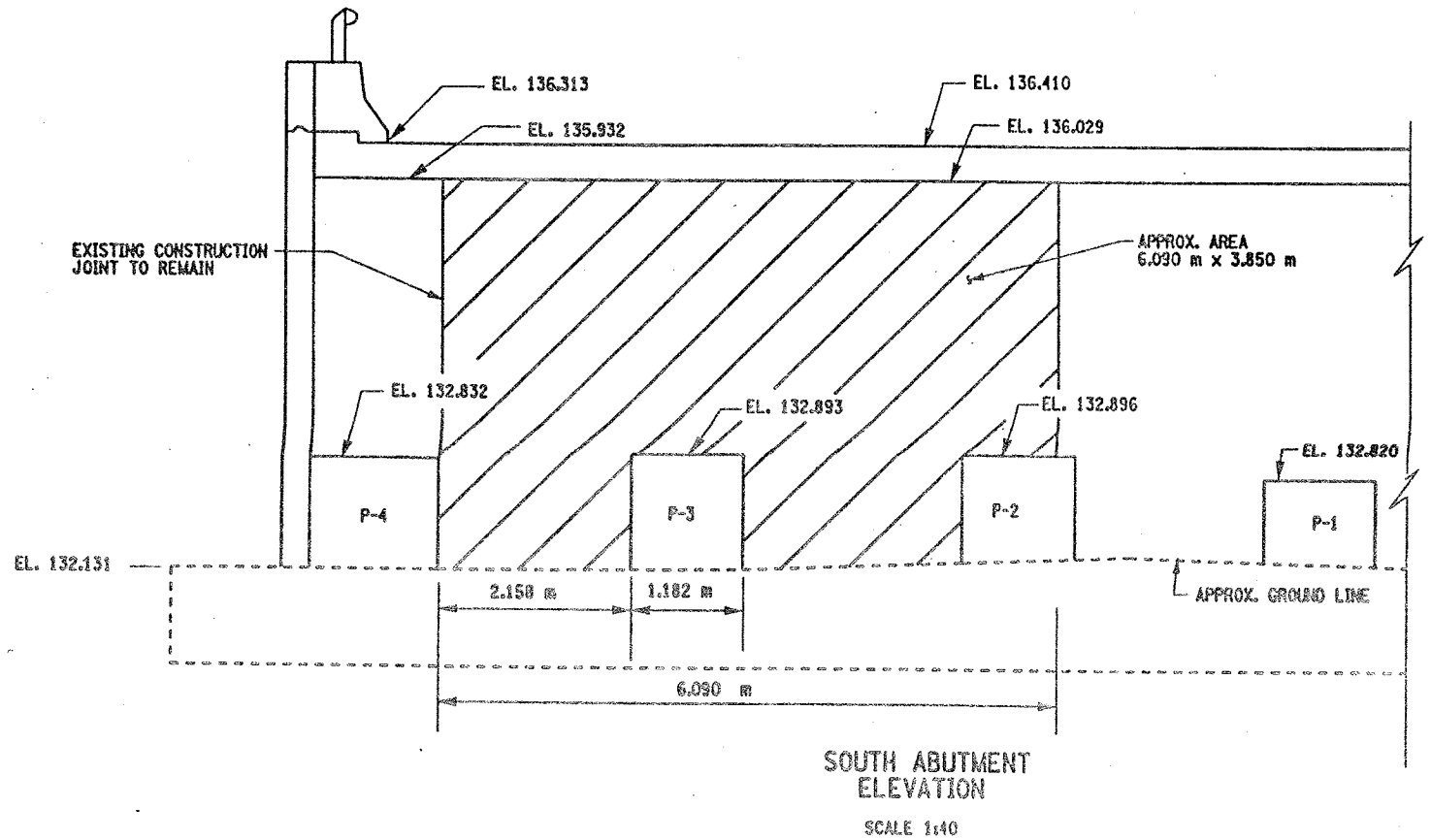

SOUTH ABUTMENT
ELEVATION

SCALE 1:40

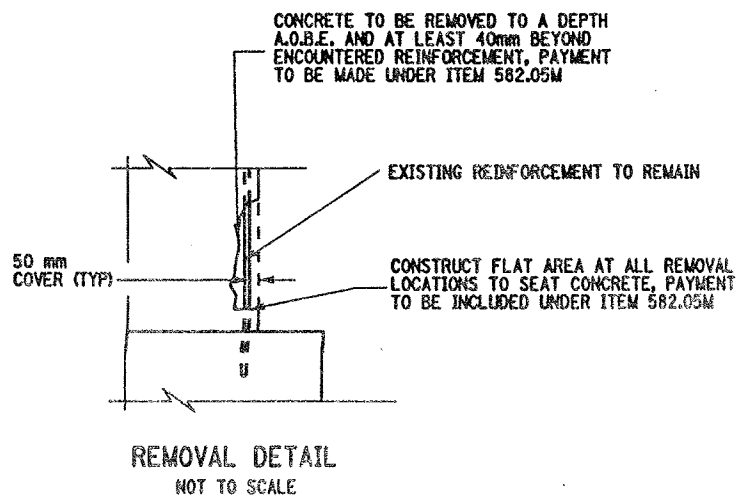

REMOVAL DETAIL
NOT TO SCALE

LIST OF ITEMS USED:

ITEM 582.05M - REMOVE STRUCTURAL CONCRETE WITH CLASS A CONCRETE (CM)

ALL DIMENSIONS ARE IN m UNLESS OTHERWISE NOTED

AS BUILT REVISIONS

SIGNATURE DATE

INTERSTATE 481 NB
OVER
CSX RAILROAD
SOUTH ABUTMENT

STATE OF NEW YORK
DEPARTMENT OF TRANSPORTATION

FILENAME	REGION	DATE	DRAWING NO.
305613AE.A1B	3	10/02	AB17-1

DESIGNED BY ____ CHECKED BY ____
DRAFTED BY ____ CHECKED BY ____
ESTIMATED BY ____
JOB MANAGER ____
DESIGN SUPERVISOR ____

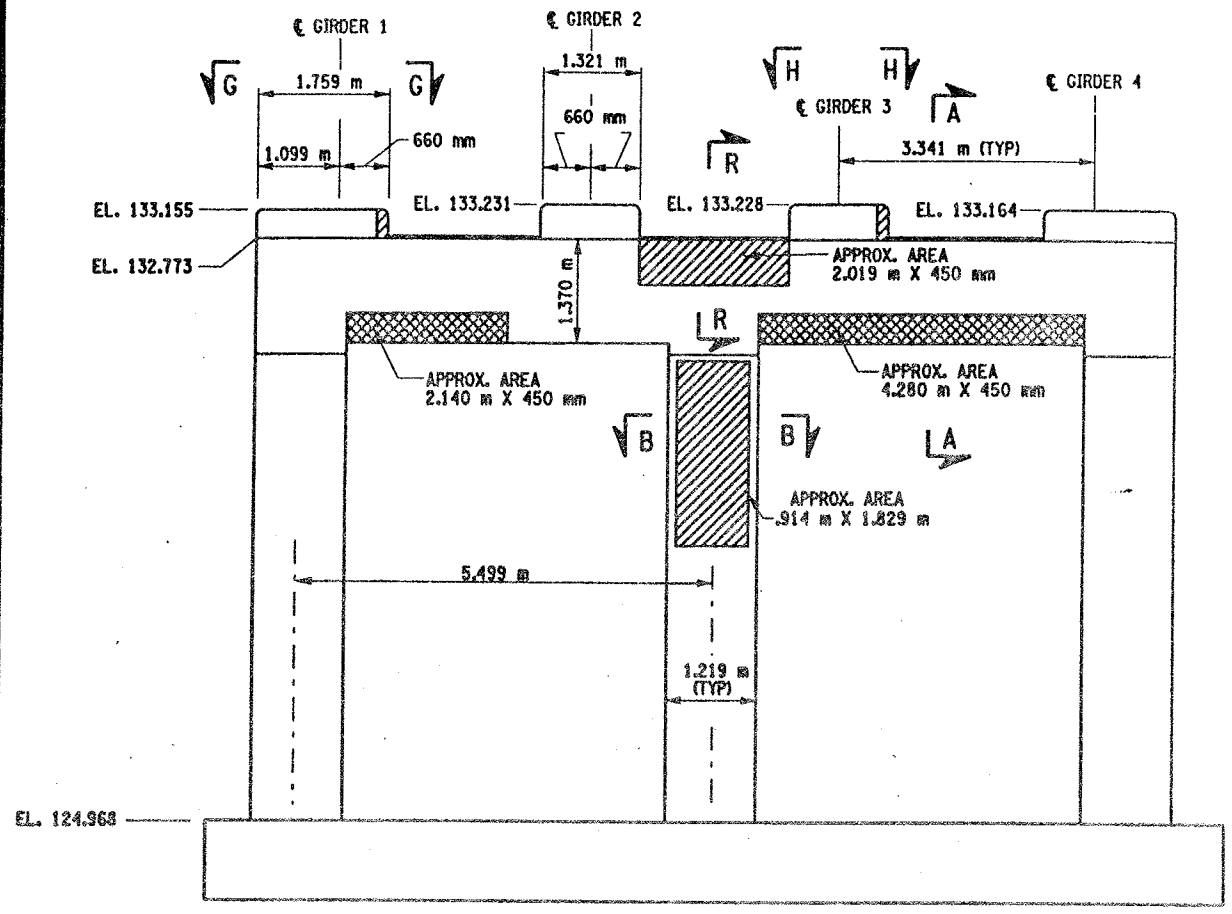

PIER 1 - FRONT FACE (LOOKING NORTH)

BIN 1093572

SCALE: 1 TO 50

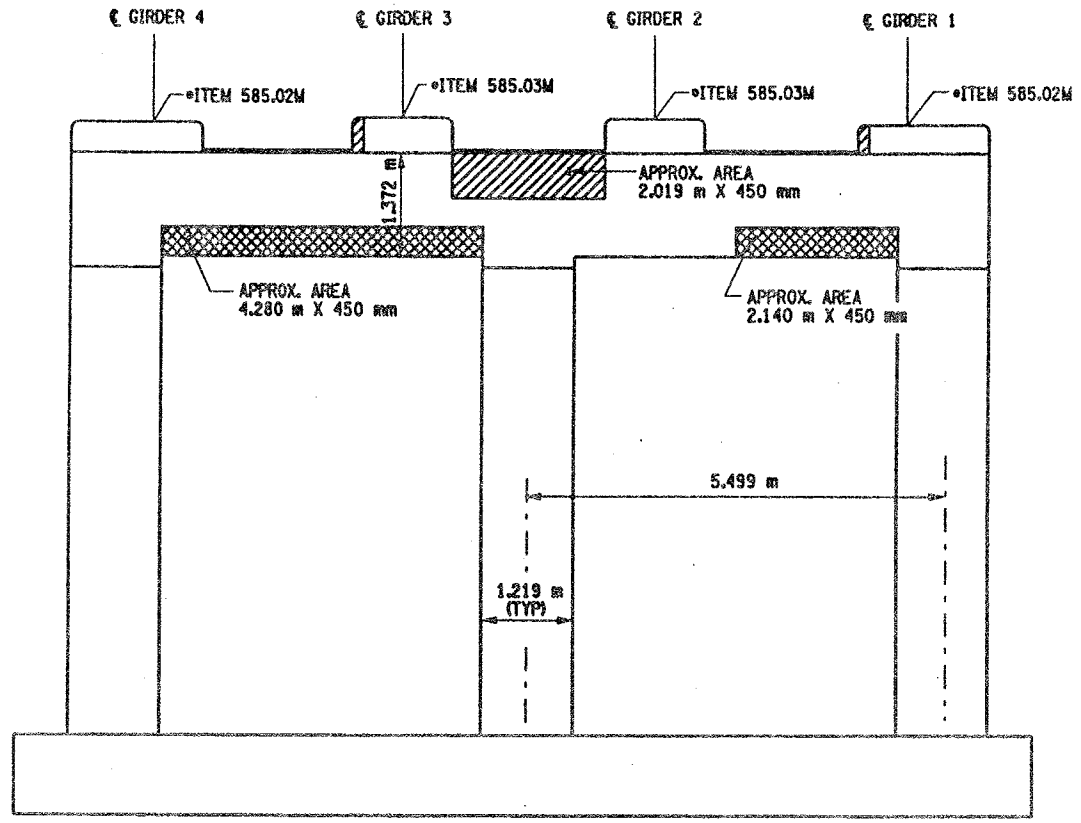

PIER 1- BACK FACE (LOOKING SOUTH)

BIN 1093572

SCALE: 1 TO 50

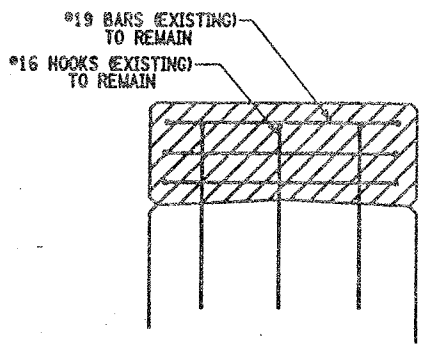

SECTION I-I

NOT TO SCALE

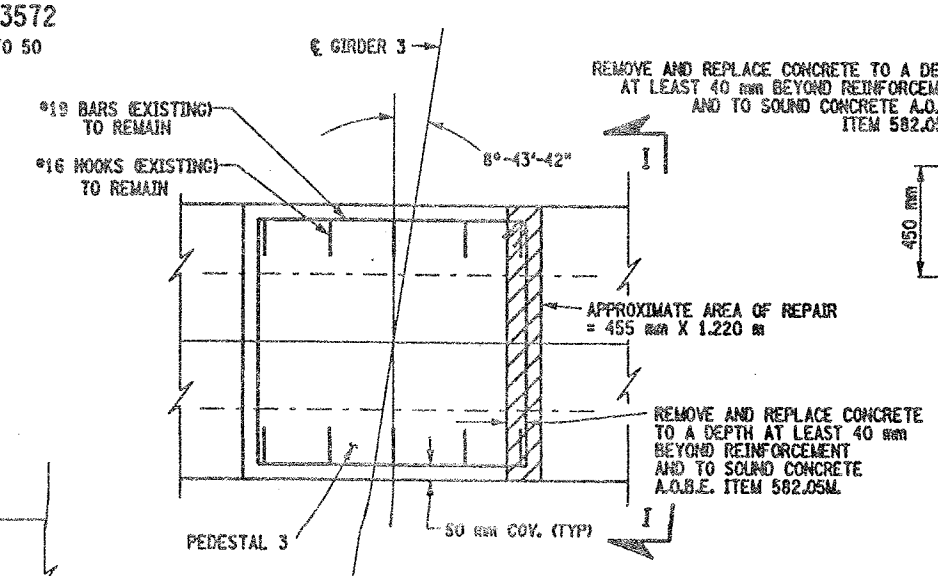

SECTION H-H

NOT TO SCALE

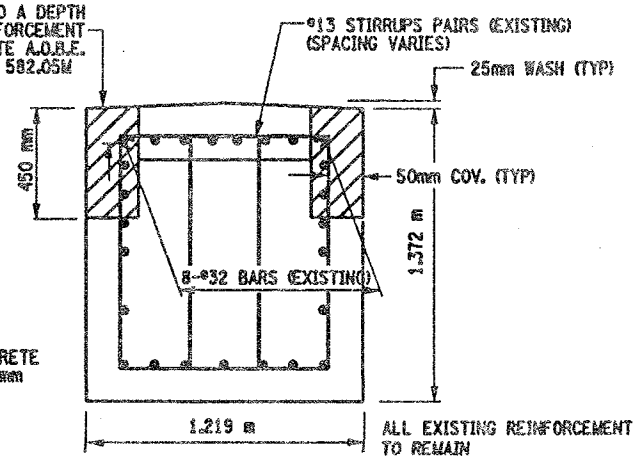

SECTION R-R

NOT TO SCALE

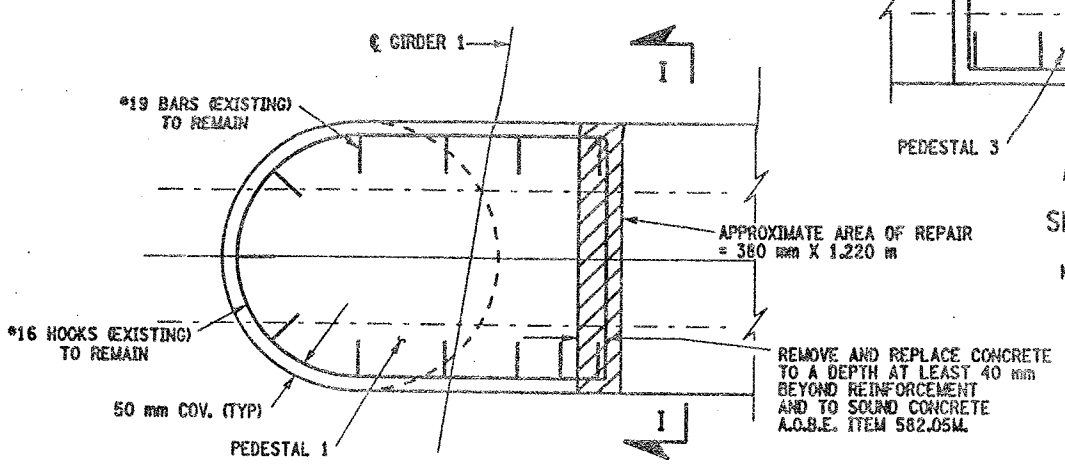

SECTION G-G

NOT TO SCALE

LIST OF ITEMS USED:

ITEM 15565.4302 - BRIDGE BEARING RESTORATION
ITEM 582.05M - REM. OF STRUC. CONC. - REPLACE WITH CLASS A CONCRETE (CM)
ITEM 582.07M - REM. OF STRUC. CONC. - REPL. W/ VERT. OVERHEAD PATCH MAT'L. (SM)
ITEM 585.02M - STRUCTURAL LIFTING OPERATIONS - TYPE B (EA)
ITEM 585.03M - STRUCTURAL LIFTING OPERATION - TYPE C (EA)

FED ROAD REG. NO.	STATE	CONTRACT NO.	SHEET NO.	TOTAL SHEETS
1	N.Y.	D259214	316	432

BRIDGE REHABILITATION PROJECT (ELEMENT SPECIFIC)

VARIOUS BRIDGES ON INTERSTATE 481

TOWNS OF DEWITT AND CICERO

ONONDAGA COUNTY

P.I.N. 305613 | B.I.N. 1093572

NOTES:

1. ALL REINFORCEMENT TO REMAIN.
2. RESTORE TO ORIGINAL DIMENSIONS.
3. PEDESTALS NUMERICALLY NUMBERED FROM WEST TO EAST.
4. FOR THE CONCRETE REPAIR AREAS, THE CONCRETE SHALL BE REMOVED TO AT LEAST 40mm MIN. BEYOND THE ENCOUNTERED REINFORCEMENT AND TO SOUND CONCRETE, A.O.B.E.
5. ELEVATIONS SHOWN ARE FROM ORIGINAL CONTRACT PLANS F.I.S.H. 70-7 AND ARE FOR REFERENCE ONLY.
6. REMOVAL DIMENSIONS SHOWN ON PLANS ARE ESTIMATED AND SHALL BE FIELD VERIFIED BY THE CONTRACTOR PRIOR TO BEGINNING OF REMOVAL OPERATIONS A.O.B.E.
7. PERFORM BEARING RESTORATION TO ALL EXPANSION BEARINGS (TO INCLUDE RESETTING OF UNDEREXTENDED OR OVEREXTENDED BEARINGS). SEE DWG. BR-10 & BR-11 FOR BEARING RESTORATION DETAILS. SEE DWG. PR17-1S FOR BEARING RESTORATION NOTES.
8. FOR SECTION A-A AND B-B SEE DWG. PR17-2S.
9. ALL CONCRETE REMOVAL SHALL BE SAWCUT TO PRODUCE NEAT REMOVAL LINES. COST TO BE INCLUDED IN THE PRICE BID FOR ITEM 582.05M AND ITEM 582.07M
10. CONTRACTOR SHALL REMOVE DEBRIS FROM TOP OF PEDESTALS AND TOP OF CAP BEAM. COST TO BE INCLUDED IN THE PRICE BID FOR VARIOUS OTHER ITEMS OF CONTRACT.
11. FOR JACKING NOTES SEE DWG. PR17-1S.

• PERFORM STRUCTURAL LIFTING UNDER ITEM 585.02M - STRUCTURAL LIFTING OPERATIONS - TYPE B (LIFTING AT A PIER) OR ITEM 585.03M - STRUCTURAL LIFTING OPERATIONS - TYPE C (LIFTING AT A PIER WHERE THE CONTRACTOR SHALL BE REQUIRED TO LIFT OFF THE FOOTING AND/OR GROUND LEVEL.

JACKING LOADS:

D.L. = 75 MT
L.L. = 50 MT
TOTAL = 125 MT

LEGEND:

ITEM 582.05M - REMOVAL OF STRUCTURAL CONCRETE- REPLACE WITH CLASS A CONCRETE (CM)

ITEM 582.07M - REMOVAL OF STRUCTURAL CONCRETE - REPLACE WITH VERTICAL OVERHEAD PATCH MATERIAL. (SM)

ALL DIMENSIONS ARE IN mm UNLESS OTHERWISE NOTED

AS BUILT REVISIONS

SIGNATURE DATE

INTERSTATE 481 NB
OVER
CSX RAILROAD YARD
PIER 1

STATE OF NEW YORK
DEPARTMENT OF TRANSPORTATION

FILENAME	REGION	DATE	DRAWING NO.
305613AE.P1A	3	10/02	PR17-1N

ESTIMATED BY ____ DRAFTED BY ____ CHECKED BY ____

DESIGN SUPERVISOR ____ JOB MANAGER ____ DESIGNED BY ____

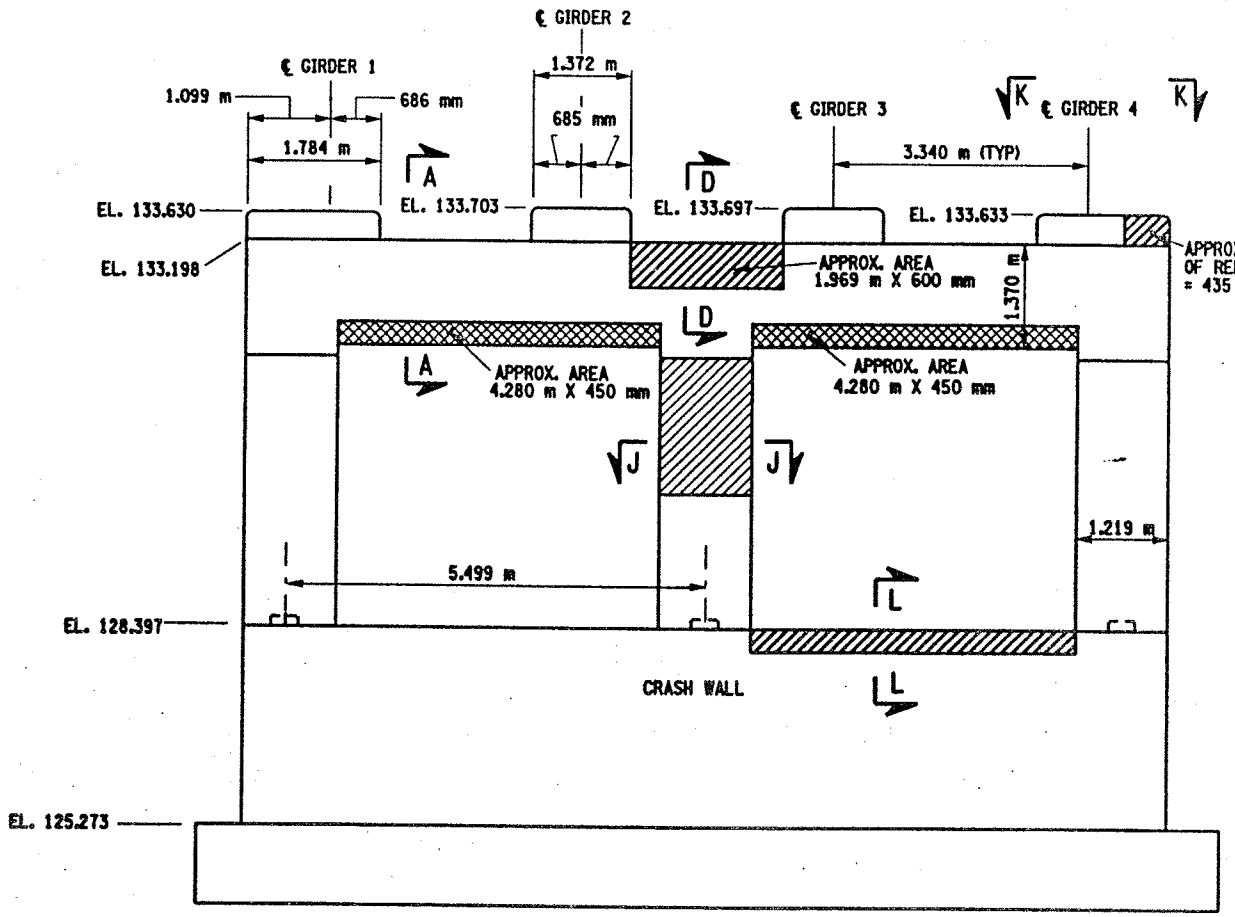

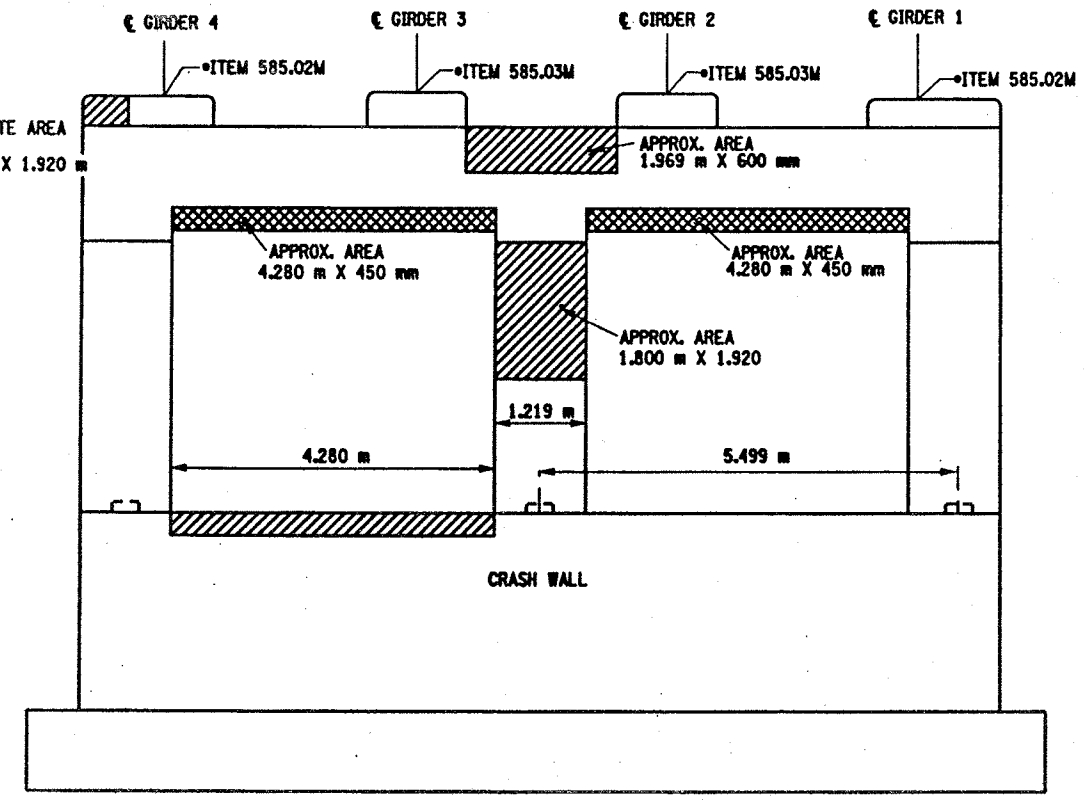

FED ROAD REG. NO.	STATE	CONTRACT NO.	SHEET NO.	TOTAL SHEETS
1	N.Y.	D259214	317	432

BRIDGE REHABILITAITON PROJECT (ELEMENT SPECIFIC)
VARIOUS BRIDGES ON INTERSTATE 481
TOWNS OF DEWITT AND CICERO
ONONDAGA COUNTY
P.I.N. 305613 B.I.N. 1093572

NOTES:

1. ALL REINFORCEMENT TO REMAIN.
2. RESTORE TO ORIGINAL DIMENSIONS.
3. PEDESTALS NUMERICALLY NUMBERED FROM WEST TO EAST.
4. FOR THE CONCRETE REPAIR AREAS, THE CONCRETE SHALL BE REMOVED TO AT LEAST 40mm MIN. BEYOND THE ENCOUNTERED REINFORCEMENT AND TO SOUND CONCRETE, A.O.B.E.
5. ELEVATIONS SHOWN ARE FROM ORIGINAL CONTRACT PLANS F.I.S.H. 70-7 AND ARE FOR REFERENCE ONLY.
6. REMOVAL DIMENSIONS SHOWN ON PLANS ARE ESTIMATED AND SHALL BE FIELD VERIFIED BY THE CONTRACTOR PRIOR TO BEGINNING OF REMOVAL OPERATIONS A.O.B.E.
7. PERFORM BEARING RESTORATION TO ALL EXPANSION BEARINGS (TO INCLUDE RESETTING OF UNDEREXTENDED OR OVEREXTENDED BEARINGS). SEE DWG. BR-10 & BR-11 FOR BEARING RESTORATION DETAILS. SEE DWG PR17-1S FOR BEARING RESTORATION NOTES.
8. SEE DWG. PR17-2S FOR SECTION A-A, D-D AND DETAIL "A".
9. ALL CONCRETE REMOVAL SHALL BE SAWCUT TO PRODUCE NEAT REMOVAL LINES. COST TO BE INCLUDED IN THE PROCE BID FOR ITEM 582.05M AND ITEM 582.07M.
10. FOR JACKING NOTES SEE DWG. PR17-1S
11. CONTRACTOR SHALL REMOVE DEBRIS FROM TOP OF PEDESTALS AND TOP OF CAP BEAM. COST TO BE INCLUDED IN THE PRICE BID FOR VARIOUS OTHER ITEMS OF CONTRACT.

PIER 2 - FRONT FACE (LOOKING NORTH)
BIN 1093572
SCALE: 1 TO 50

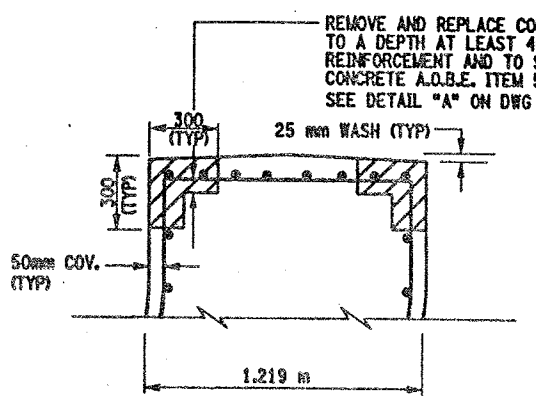

ALL EXISTING REINFORCEMENT TO REMAIN

SECTION L-L
NOT TO SCALE

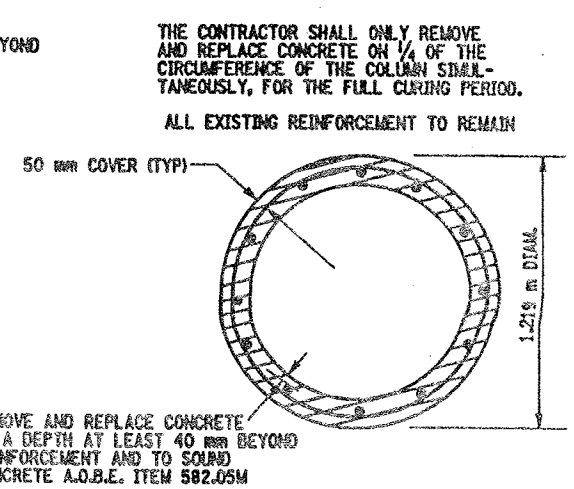

SECTION J-J
NOT TO SCALE

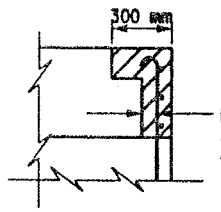

SECTION M-M
NOT TO SCALE

PIER 2- BACK FACE (LOOKING SOUTH)
BIN 1093572
SCALE: 1 TO 50

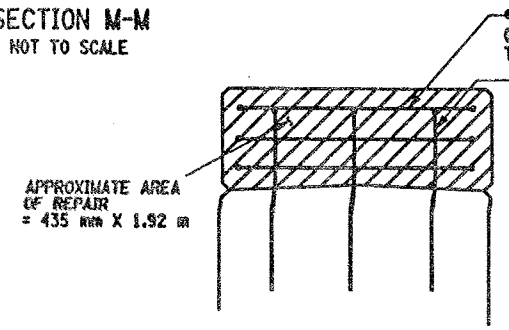

SECTION N-N
NOT TO SCALE

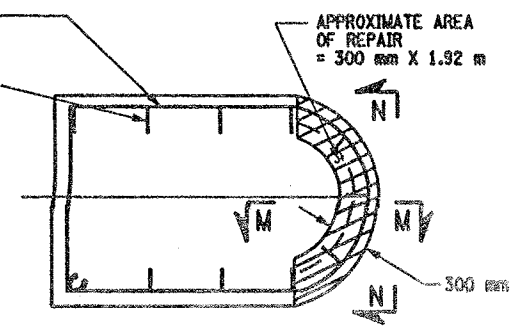

SECTION K-K
NOT TO SCALE

LIST OF ITEMS USED:

ITEM 15565.4302M - BRIDGE BEARING RESTORATION (EA)
ITEM 582.05M - REM. OF STRUC. CONC. - REPLACE WITH CLASS A CONCRETE (CM)
ITEM 582.07M - REM. OF STRUC. CONC. - REPL. W/ VERT. OVERHEAD PATCH MAT'L (SM)
ITEM 585.02M - STRUCTURAL LIFTING OPERATIONS - TYPE B (EA)
ITEM 585.03M - STRUCTURAL LIFTING OPERATION - TYPE C (EA)

• PERFORM STRUCTURAL LIFTING UNDER ITEM 585.02M - STRUCTURAL LIFTING OPERATIONS - TYPE B (LIFTING AT A PIER) OR ITEM 585.03M - STRUCTURAL LIFTING OPERATIONS - TYPE C (LIFTING AT A PIER WHERE THE CONTRACTOR SHALL BE REQUIRED TO LIFT OFF THE FOOTING AND/OR GROUND LEVEL.

JACKING LOADS:

D.L. = 75 MT
L.L. = 50 MT
TOTAL = 125 MT

LEGEND:

ITEM 582.05M - REMOVAL OF STRUCTURAL CONCRETE- REPLACE WITH CLASS A CONCRETE (CM)

ITEM 582.07M - REMOVAL OF STRUCTURAL CONCRETE - REPLACE WITH VERTICAL OVERHEAD PATCH MATERIAL. (SM)

ALL DIMENSIONS ARE IN mm UNLESS OTHERWISE NOTED

AS BUILT REVISIONS

SIGNATURE DATE

INTERSTATE 481 NB
OVER
CSX RAILROAD YARD
PIER 2

STATE OF NEW YORK
DEPARTMENT OF TRANSPORTATION

FILENAME	REGION	DATE	DRAWING NO.
305613AE_P2A	3	10/02	PR17-2N

DESIGNED BY ____ CHECKED BY ____
DRAFTED BY ____ CHECKED BY ____
ESTIMATED BY ____
JOB MANAGER ____
DESIGN SUPERVISOR ____

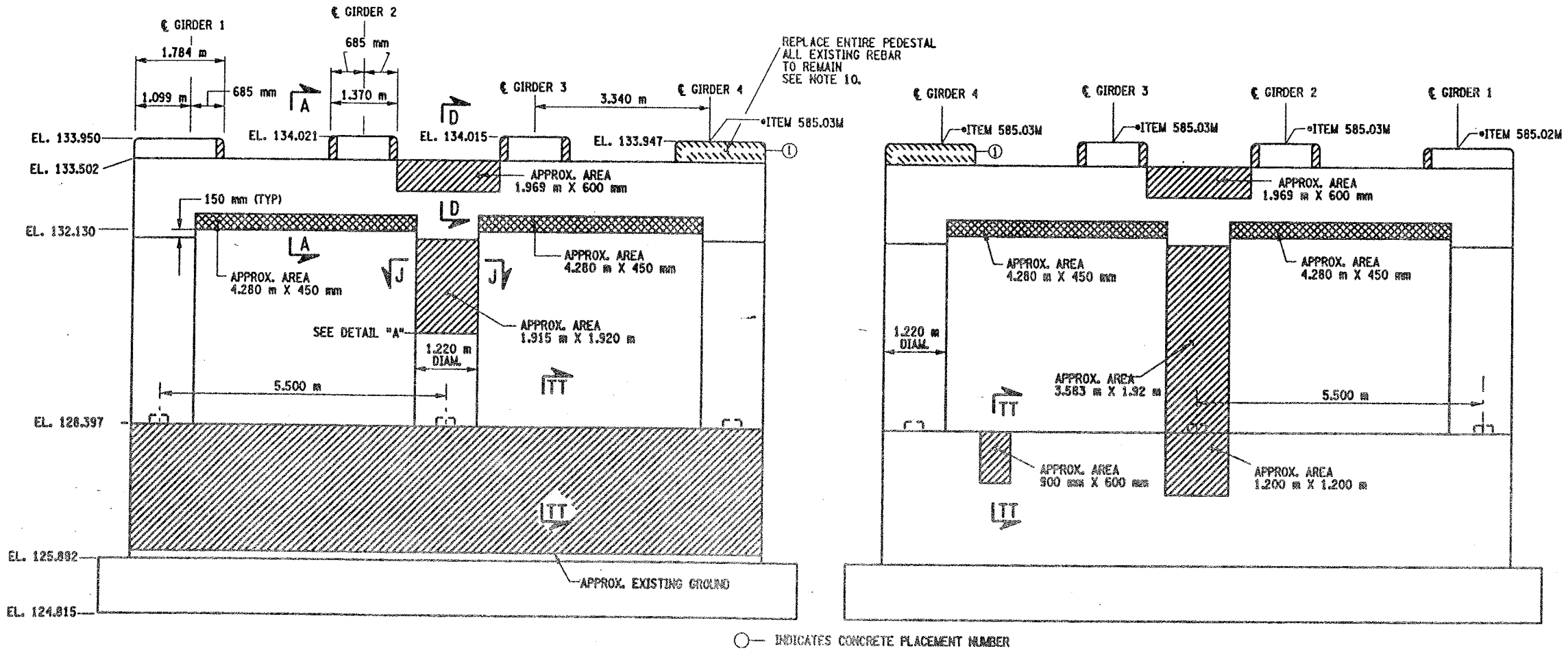

○— INDICATES CONCRETE PLACEMENT NUMBER

PIER 3 - FRONT FACE (LOOKING NORTH)

BIN 1093572

SCALE: 1 TO 50

PIER 3 - BACK FACE (LOOKING SOUTH)

BIN 1093572

SCALE: 1 TO 50

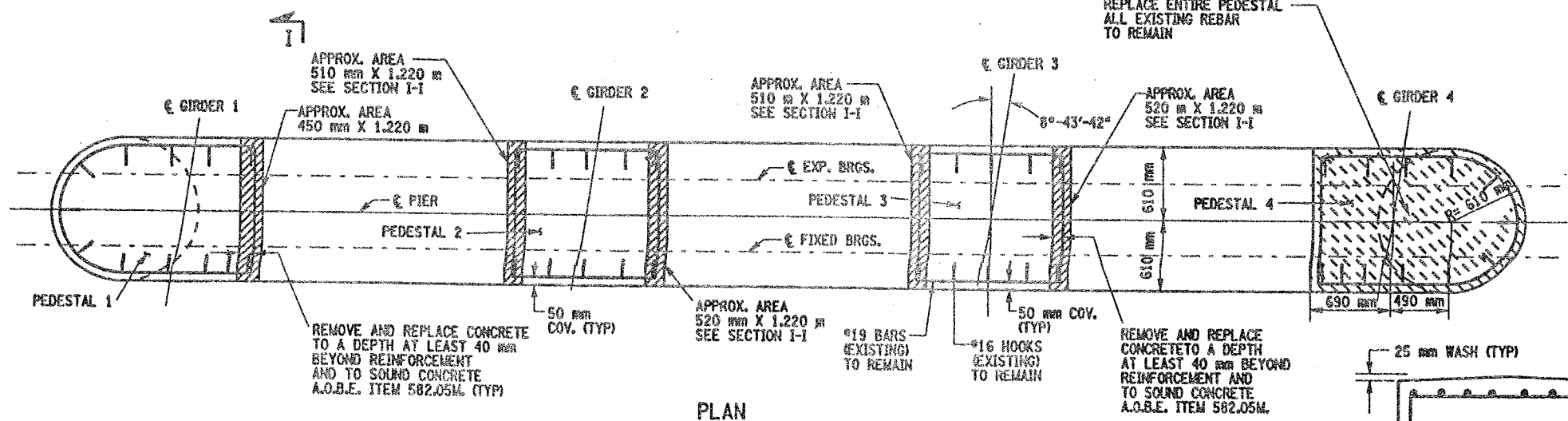

PLAN

SCALE: 1 TO 25

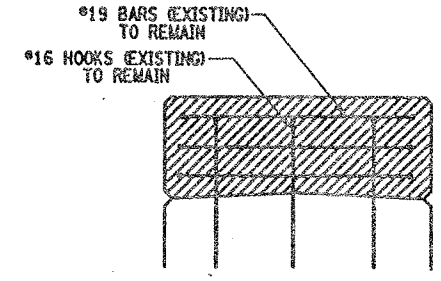

SECTION I-I

NOT TO SCALE

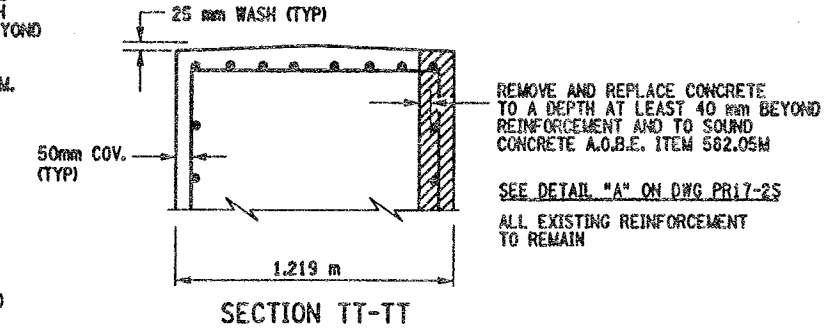

SECTION TT-TT

NOT TO SCALE

CONCRETE TABLE (m³)		
PLACEMENT	QUANTITY	ITEM NO.
1	0.90	555.0105M

LIST OF ITEMS USED:

ITEM 15565.4302M - BRIDGE BEARING RESTORATION (EA)
ITEM 555.0105M - CONCRETE FOR STRUCTURES CLASS A (CM)
ITEM 580.01M - REMOVAL OF STRUCTURAL CONCRETE (CM)
ITEM 582.05M - REM. OF STRUC. CONC. - REPLACE WITH CLASS A CONCRETE (CM)
ITEM 582.07M - REM. OF STRUC. CONC. - REPL. W/ VERT. OVERHEAD PATCH MAT.L (SM)
ITEM 585.02M - STRUCTURAL LIFTING OPERATIONS - TYPE B (EA)
ITEM 585.03M - STRUCTURAL LIFTING OPERATION - TYPE C (EA)

FED ROAD REG. NO.	STATE	CONTRACT NO.	SHEET NO.	TOTAL SHEETS
1	N.Y.	D259214	318	432

BRIDGE REHABILITATION PROJECT (ELEMENT SPECIFIC)

VARIOUS BRIDGES ON INTERSTATE 481

TOWNS OF DEWITT AND CICERO

ONONDAGA COUNTY

P.I.N. 305613 | B.I.N. 1093572

NOTES:

1. ALL REINFORCEMENT TO REMAIN.
2. RESTORE TO ORIGINAL DIMENSIONS.
3. PEDESTALS NUMERICALLY NUMBERED FROM WEST TO EAST.
4. FOR THE CONCRETE REPAIR AREAS, THE CONCRETE SHALL BE REMOVED TO AT LEAST 40mm MIN. BEYOND THE ENCOUNTERED REINFORCEMENT AND TO SOUND CONCRETE, A.O.B.E.
5. ELEVATIONS SHOWN ARE FROM ORIGINAL CONTRACT PLANS F.I.S.H. 70-7 AND ARE FOR REFERENCE ONLY.
6. REMOVAL DIMENSIONS SHOWN ON PLANS ARE ESTIMATED AND SHALL BE FIELD VERIFIED BY THE CONTRACTOR PRIOR TO BEGINNING OF REMOVAL OPERATIONS A.O.B.E.
7. PERFORM BEARING RESTORATION TO ALL EXPANSION BEARINGS (TO INCLUDE RESETTING OF UNDEREXTENDED OR OVEREXTENDED BEARINGS). SEE DWG BR-10 & BR-11 FOR BEARING RESTORATION DETAILS. SEE DWG. PR17-1S FOR BEARING RESTORATION NOTES.
8. SEE DWG. PR17-2S FOR SECTIONS A-A, D-D AND DETAIL "A"
9. SEE DWG. PR17-2N FOR SECTION J-J
10. PEDESTAL 4 SHALL BE REPLACED TO EXISTING DIMENSIONS. ITEM 555.0105 M
11. ALL CONCRETE REMOVAL SHALL BE SAWCUT TO PRODUCE NEAT REMOVAL LINES. COST TO BE INCLUDED IN THE PRICE BID FOR ITEM 582.05M AND ITEM 582.07M.
12. FOR JACKING NOTES SEE DWG. PR17-1S
13. CONTRACTOR SHALL REMOVE DEBRIS FROM TOP OF PEDESTALS AND TOP OF CAPBEAM. COST TO BE INCLUDED IN THE PRICE BID FOR VARIOUS OTHER ITEMS OF CONTRACT.

• PERFORM STRUCTURAL LIFTING UNDER ITEM 585.02M - STRUCTURAL LIFTING OPERATIONS - TYPE B (LIFTING AT A PIER) OR ITEM 585.03M - STRUCTURAL LIFTING OPERATIONS - TYPE C (LIFTING AT A PIER WHERE THE CONTRACTOR SHALL BE REQUIRED TO LIFT OFF THE FOOTING AND/OR GROUND LEVEL.

JACKING LOADS:

D.L. = 100 MT
L.L. = 50 MT
TOTAL = 150 MT

LEGEND:

ITEM 582.05M - REMOVAL OF STRUCTURAL CONCRETE- REPLACE WITH CLASS A CONCRETE (CM)

ITEM 582.07M - REMOVAL OF STRUCTURAL CONCRETE - REPLACE WITH VERTICAL OVERHEAD PATCH MATERIAL. (SM)

ITEM 580.01 M - REMOVAL OF STRUCTURAL CONCRETE. (CM) AND ITEM 555.0105 M - CONCRETE FOR STRUCTURES CLASS A. (CM)

ALL DIMENSIONS ARE IN mm UNLESS OTHERWISE NOTED

AS BUILT REVISIONS

SIGNATURE DATE

INTERSTATE 481 NB
OVER
CSX RAILROAD YARD
PIER 3

STATE OF NEW YORK
DEPARTMENT OF TRANSPORTATION

FILENAME	REGION	DATE	DRAWING NO.
305613AE.P3A	3	10/02	PR17-3N

DESIGN SUPERVISOR ____ JOB MANAGER ____ DESIGNED BY ____ DRAFTED BY ____ ESTIMATED BY ____ CHECKED BY ____

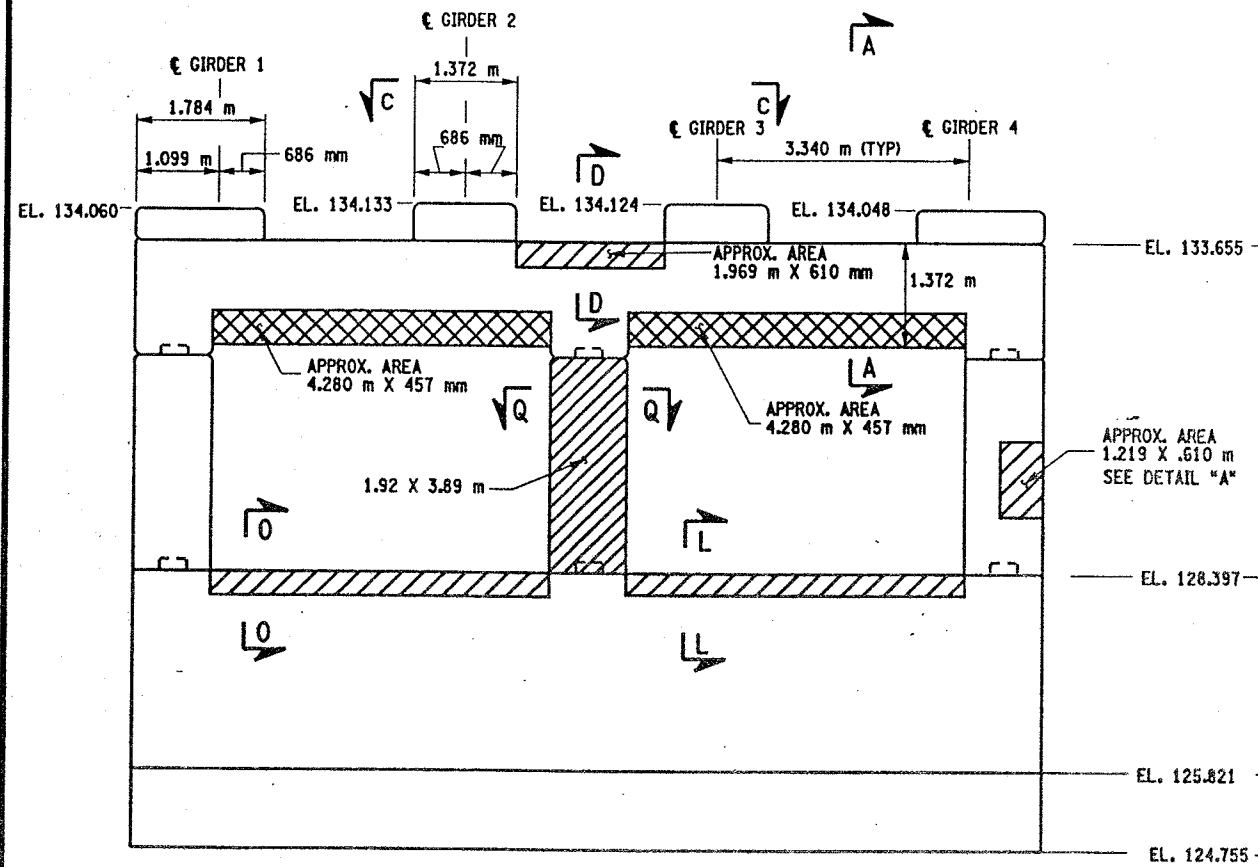

PIER 4 - FRONT FACE (LOOKING NORTH)
BIN 1093572
SCALE: 1 TO 50

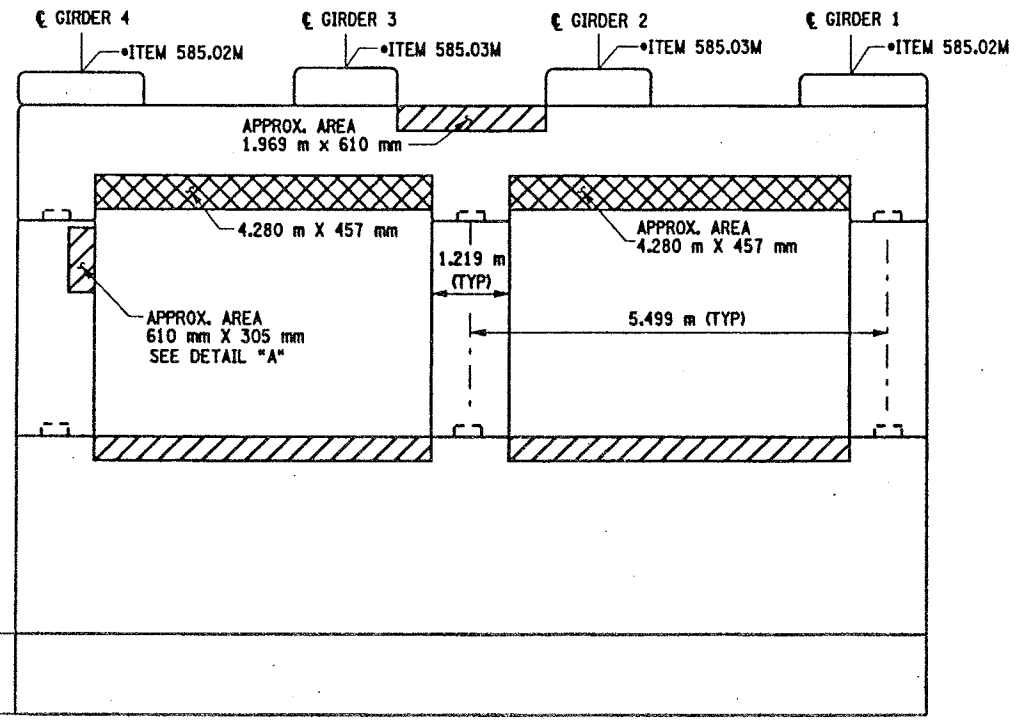

PIER 4 - BACK FACE (LOOKING SOUTH)
BIN 1093572
SCALE: 1 TO 50

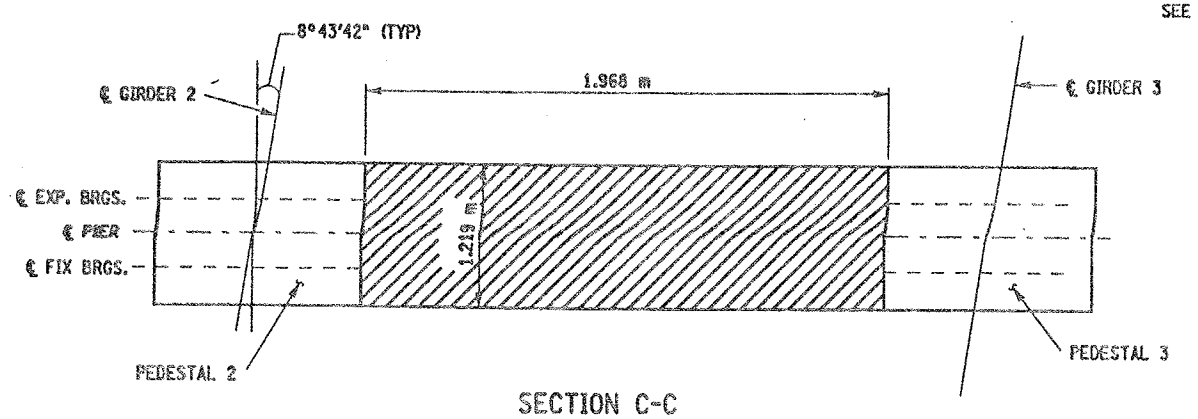

SECTION C-C
NOT TO SCALE

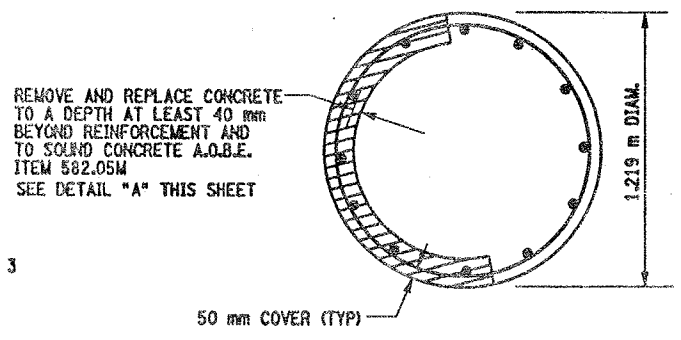

THE CONTRACTOR SHALL ONLY REMOVE AND REPLACE CONCRETE ON 1/4 OF THE CIRCUMFERENCE OF THE COLUMN SIMULTANEOUSLY, FOR THE FULL CURING PERIOD.

SECTION Q-Q
NOT TO SCALE

LIST OF ITEMS USED:

ITEM 15565.4302M - BRIDGE BEARING RESTORATION (EA)
ITEM 582.05M - REM. OF STRUC. CONC. - REPLACE WITH CLASS A CONCRETE (CM)
ITEM 582.07M - REM. OF STRUC. CONC. - REPL. W/VERT. OVERHEAD PATCH MAT'L (SM)
ITEM 585.02M - STRUCTURAL LIFTING OPERATIONS - TYPE B (EA)
ITEM 585.03M - STRUCTURAL LIFTING OPERATION - TYPE C (EA)

FED ROAD REG. NO.	STATE	CONTRACT NO.	SHEET NO.	TOTAL SHEETS
1	N.Y.	D259214	319	432

BRIDGE REHABILITATION PROJECT (ELEMENT SPECIFIC)
VARIOUS BRIDGES ON INTERSTATE 481
TOWNS OF DEWITT AND CICERO
ONONDAGA COUNTY
P.I.N. 305613 B.I.N. 1093572

NOTES:

1. ALL REINFORCEMENT TO REMAIN.
2. RESTORE TO ORIGINAL DIMENSIONS.
3. PEDESTALS NUMERICALLY NUMBERED FROM WEST TO EAST.
4. FOR THE CONCRETE REPAIR AREAS, THE CONCRETE SHALL BE REMOVED TO AT LEAST 40mm MIN. BEYOND THE ENCOUNTERED REINFORCEMENT AND TO SOUND CONCRETE, A.O.B.E.
5. ELEVATIONS SHOWN ARE FROM ORIGINAL CONTRACT PLANS F.I.S.H. 70-7 AND ARE FOR REFERENCE ONLY.
6. REMOVAL DIMENSIONS SHOWN ON PLANS ARE ESTIMATED AND SHALL BE FIELD VERIFIED BY THE CONTRACTOR AND ENGINEER PRIOR TO BEGINNING OF REMOVAL OPERATIONS A.O.B.E.
7. PERFORM BEARING RESTORATION TO ALL EXPANSION BEARINGS (TO INCLUDE RESETTING OF UNDEREXTENDED OR OVEREXTENDED BEARINGS). SEE DWG. BR-10 AND BR-11 FOR BEARING RESTORATION DETAILS. SEE DWG. PR17-1S FOR BEARING RESTORATION NOTES.
8. SEE DWG. PR17-2S FOR SECTIONS A-A, D-D AND DETAIL "A".
9. SEE DWG. PR17-4S FOR SECTION O-O.
10. SEE DWG. PR17-2N FOR SECTION L-L.
11. ALL CONCRETE REMOVAL SHALL BE SAWCUT TO PRODUCE NEAT REMOVAL LINES. COST TO BE INCLUDED IN THE PRICE BID FOR ITEM 582.05M AND ITEM 582.07M.
12. FOR JACKING NOTES SEE DWG PR17-1S.
13. CONTRACTOR SHALL REMOVE DEBRIS FROM TOP OF PEDESTALS AND TOP OF CAP BEAM. COST TO BE INCLUDED IN THE PRICE BID FOR VARIOUS OTHER ITEMS OF CONTRACT.

• PERFORM STRUCTURAL LIFTING UNDER ITEM 585.02M - STRUCTURAL LIFTING OPERATIONS - TYPE B (LIFTING AT A PIER) OR ITEM 585.03M - STRUCTURAL LIFTING OPERATIONS - TYPE C (LIFTING AT A PIER WHERE THE CONTRACTOR SHALL BE REQUIRED TO LIFT OFF THE FOOTING AND/OR GROUND LEVEL.

JACKING LOADS:

D.L. = 100 MT
L.L. = 50 MT
TOTAL = 150 MT

LEGEND:

ITEM 582.05M - REMOVAL OF STRUCTURAL CONC. REPLACE WITH CLASS A CONCRETE (CM)

ITEM 582.07M - REMOVAL OF STRUCTURAL CONCRETE - REPLACE WITH VERTICAL OVERHEAD PATCH MATERIAL. (SM)

ALL DIMENSIONS ARE IN mm UNLESS OTHERWISE NOTED

AS BUILT REVISIONS

SIGNATURE DATE

INTERSTATE 481 NB
OVER
CSX RAILROAD
PIER 4

STATE OF NEW YORK
DEPARTMENT OF TRANSPORTATION

FILENAME	REGION	DATE	DRAWING NO.
305613AE.P4A	3	10/02	PR17-4N

DESIGN SUPERVISOR ____ JOB MANAGER ____ DESIGNED BY ____ CHECKED BY ____ ESTIMATED BY ____ DRAFTED BY ____ CHECKED BY

FED ROAD REG. NO.	STATE	CONTRACT NO.	SHEET NO.	TOTAL SHEETS
1	N.Y.	D259214	320	432

BRIDGE REHABILITATION PROJECT (ELEMENT SPECIFIC)
VARIOUS BRIDGES ON INTERSTATE 481
TOWNS OF DEWITT AND CICERO
ONONDAGA COUNTY
P.I.N. 305613 B.I.N. 1093572

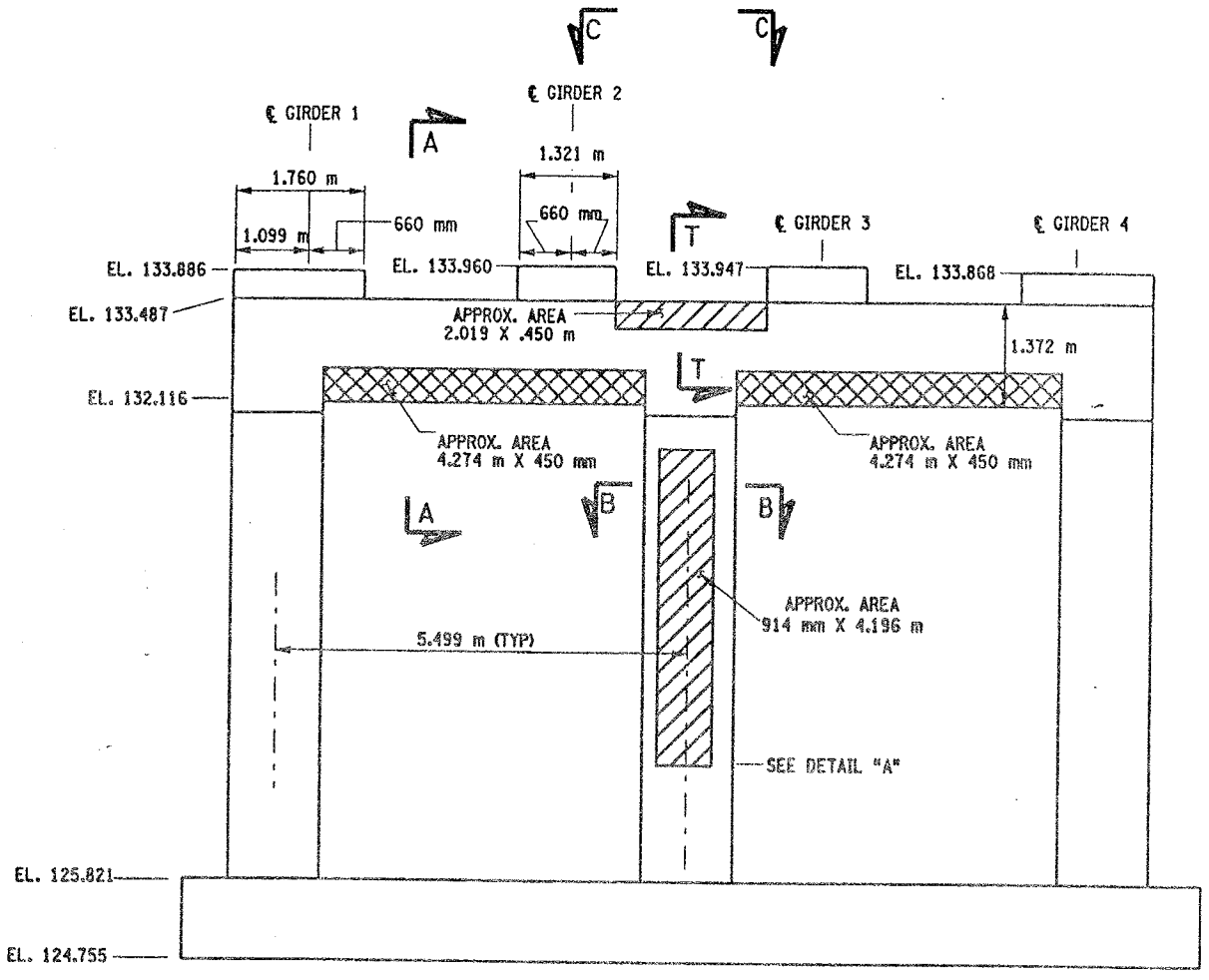

PIER 5 - FRONT FACE (LOOKING NORTH)
BIN 1093572
SCALE: 1 TO 50

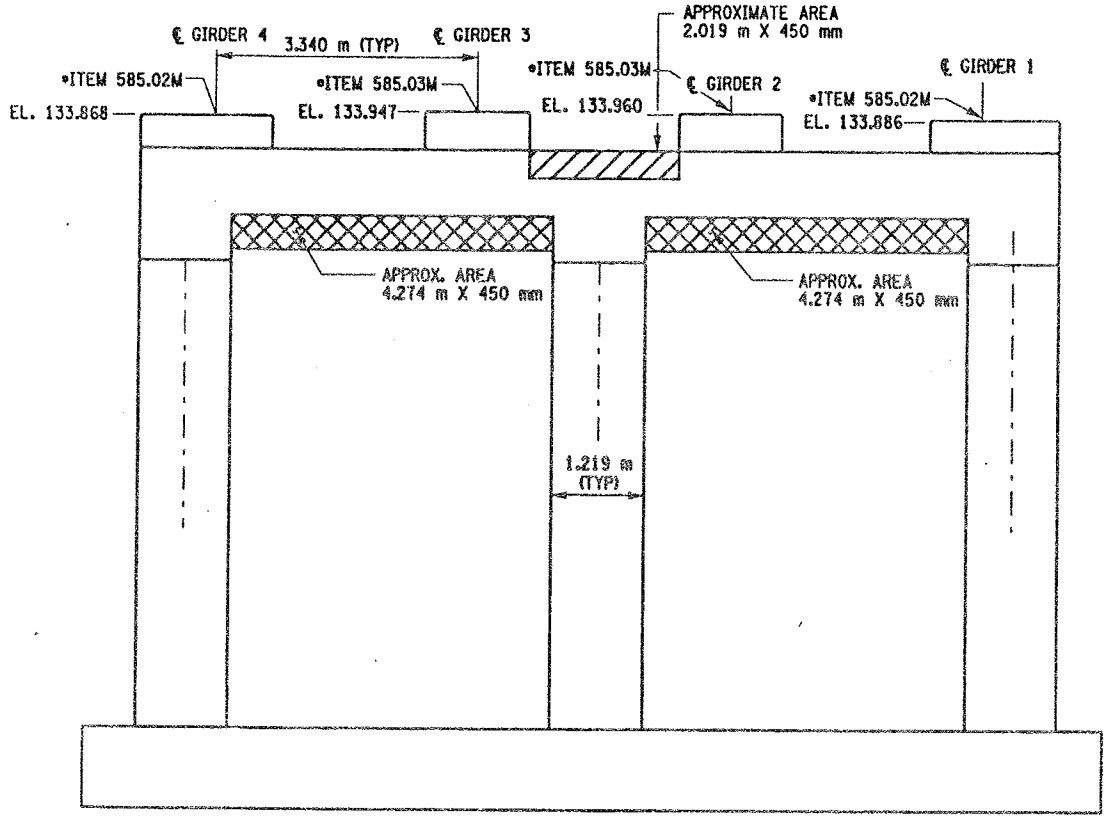

PIER 5 - BACK FACE (LOOKING SOUTH)
BIN 1093572
SCALE: 1 TO 50

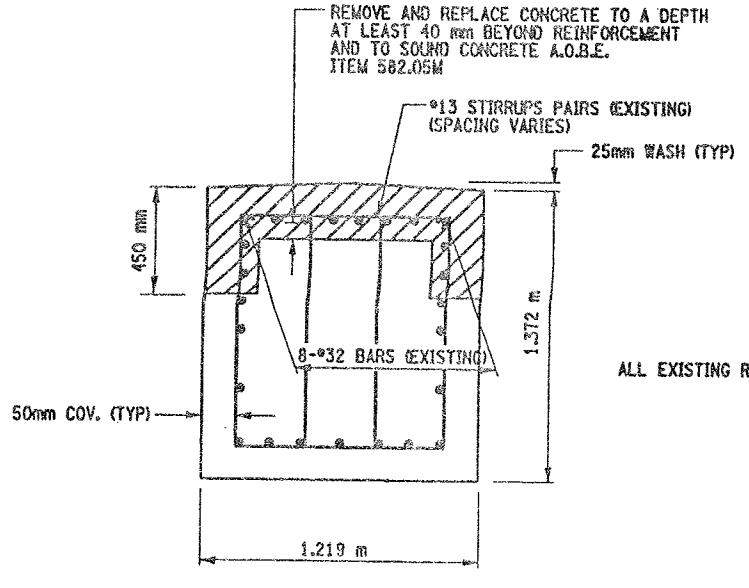

SECTION T-T
NOT TO SCALE

ALL EXISTING REINFORCEMENT TO REMAIN

• PERFORM STRUCTURAL LIFTING UNDER ITEM 585.02M - STRUCTURAL LIFTING OPERATIONS - TYPE B (LIFTING AT A PIER) OR ITEM 585.03M - STRUCTURAL LIFTING OPERATIONS - TYPE C (LIFTING AT A PIER WHERE THE CONTRACTOR SHALL BE REQUIRED TO LIFT OFF THE FOOTING AND/OR GROUND LEVEL.

JACKING LOADS:

D.L. = 100 MT
L.L. = 50 MT
TOTAL = 150 MT

LIST OF ITEMS USED:
ITEM 15565.4302M - BRIDGE BEARING RESTORATION (EA)
ITEM 582.05M - REM. OF STRUC. CONC. - REPLACE WITH CLASS A CONCRETE (CM)
ITEM 582.07M - REM. OF STRUC. CONC. - REPL. W/ VERT. OVERHEAD PATCH MATL. (SM)
ITEM 585.02M - STRUCTURAL LIFTING OPERATIONS - TYPE B (EA)
ITEM 585.03M - STRUCTURAL LIFTING OPERATION - TYPE C (EA)

NOTES:

1. ALL REINFORCEMENT TO REMAIN.
2. RESTORE TO ORIGINAL DIMENSIONS.
3. PEDESTALS NUMERICALLY NUMBERED FROM WEST TO EAST.
4. FOR THE CONCRETE REPAIR AREAS, THE CONCRETE SHALL BE REMOVED TO AT LEAST 40mm MIN. BEYOND THE ENCOUNTERED REINFORCEMENT AND TO SOUND CONCRETE, A.O.B.E.
5. ELEVATIONS SHOWN ARE FROM ORIGINAL CONTRACT PLANS F.I.S.H. 70-7 AND ARE FOR REFERENCE ONLY.
6. REMOVAL DIMENSIONS SHOWN ON PLANS ARE ESTIMATED AND SHALL BE FIELD VERIFIED BY THE CONTRACTOR AND ENGINEER PRIOR TO BEGINNING OF REMOVAL OPERATIONS A.O.B.E.
7. PERFORM BEARING RESTORATION TO ALL EXPANSION BEARINGS (TO INCLUDE RESETTING OF UNDEREXTENDED OR OVEREXTENDED BEARINGS). SEE DWG. BR-10 & BR-11 FOR BEARING RESTORATION DETAILS. SEE DWG. PR17-1S FOR BEARING RESTORATION NOTES.
8. SEE DWG. PR17-2S FOR SECTION A-A AND B-B AND DETAIL "A".
9. SEE DWG PR17-1S FOR SECTION C-C.
10. ALL CONCRET REMOVAL SHALL BE SAWCUT TO PRODUCE NEAT REMOVAL LINES. COST TO BE INCLUDED IN THE PRICE BID FOR ITEM 582.05M AND ITEM 582.07M.
11. FOR JACKING NOTES SEE DWG. PR17-1S.
12. CONTRACTOR SHALL REMOVE DEBRIS FROM TOP OF CAP BEAM. COST TO BE INCLUDED IN THE PRICE BID FOR VARIOUS ITEMS OF CONTRACT.

LEGEND:

ITEM 582.05M - REMOVAL OF STRUCTURAL CONCRETE- REPLACE WITH CLASS A CONCRETE (CM)

ITEM 582.07M - REMOVAL OF STRUCTURAL CONCRETE - REPLACE WITH VERTICAL OVER-HEAD PATCH MATERIAL. (SM)

ALL DIMENSIONS ARE IN mm UNLESS OTHERWISE NOTED

AS BUILT REVISIONS

SIGNATURE DATE

INTERSTATE 481 NB
OVER
CSX RAILROAD YARD
PIER 5

STATE OF NEW YORK
DEPARTMENT OF TRANSPORTATION

FILENAME	REGION	DATE	DRAWING NO.
305613AE.P5A	3	10/02	PR17-5N

DESIGN SUPERVISOR ____ JOB MANAGER ____ DESIGNED BY ____ ESTIMATED BY ____ DRAFTED BY ____ CHECKED BY ____

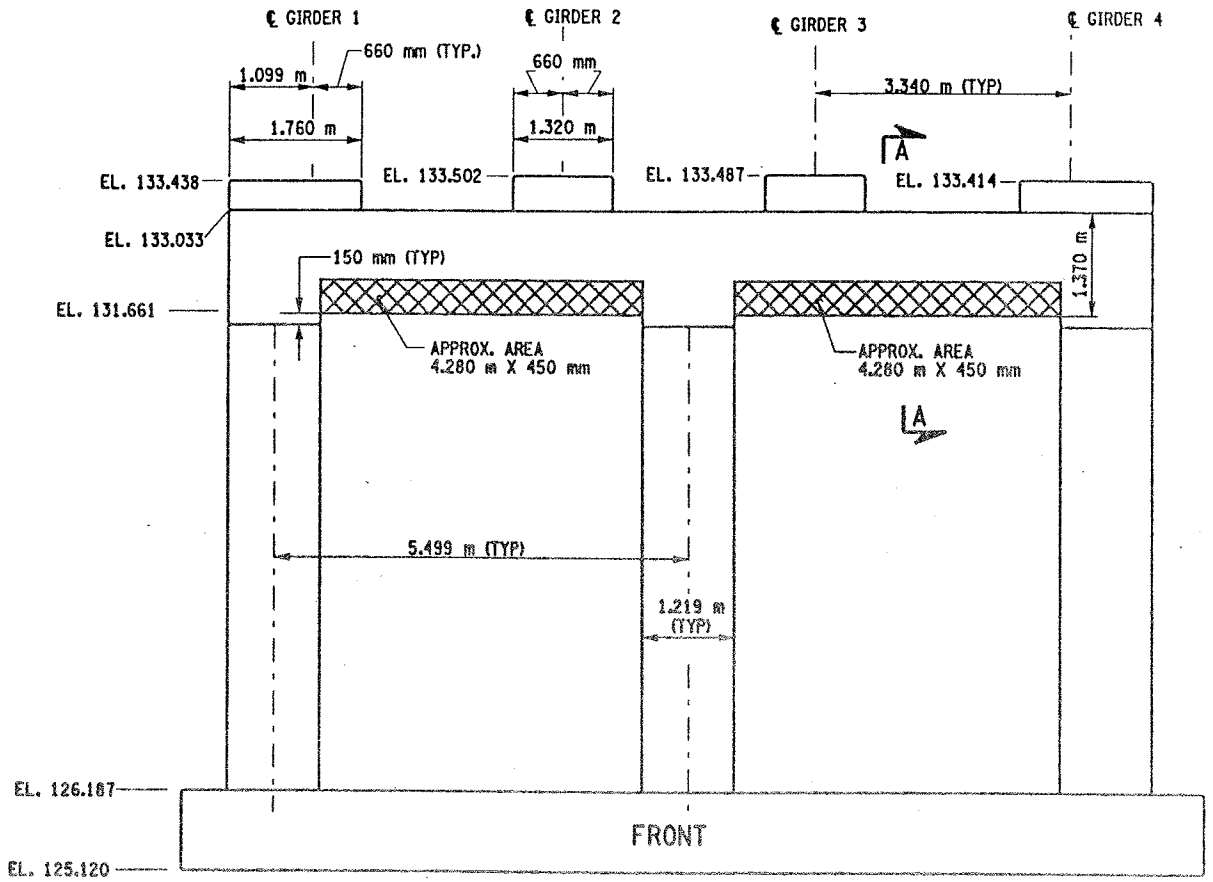

PIER 6 -FRONT FACE (LOOKING NORTH)

BIN 1093572

SCALE: 1 TO 50

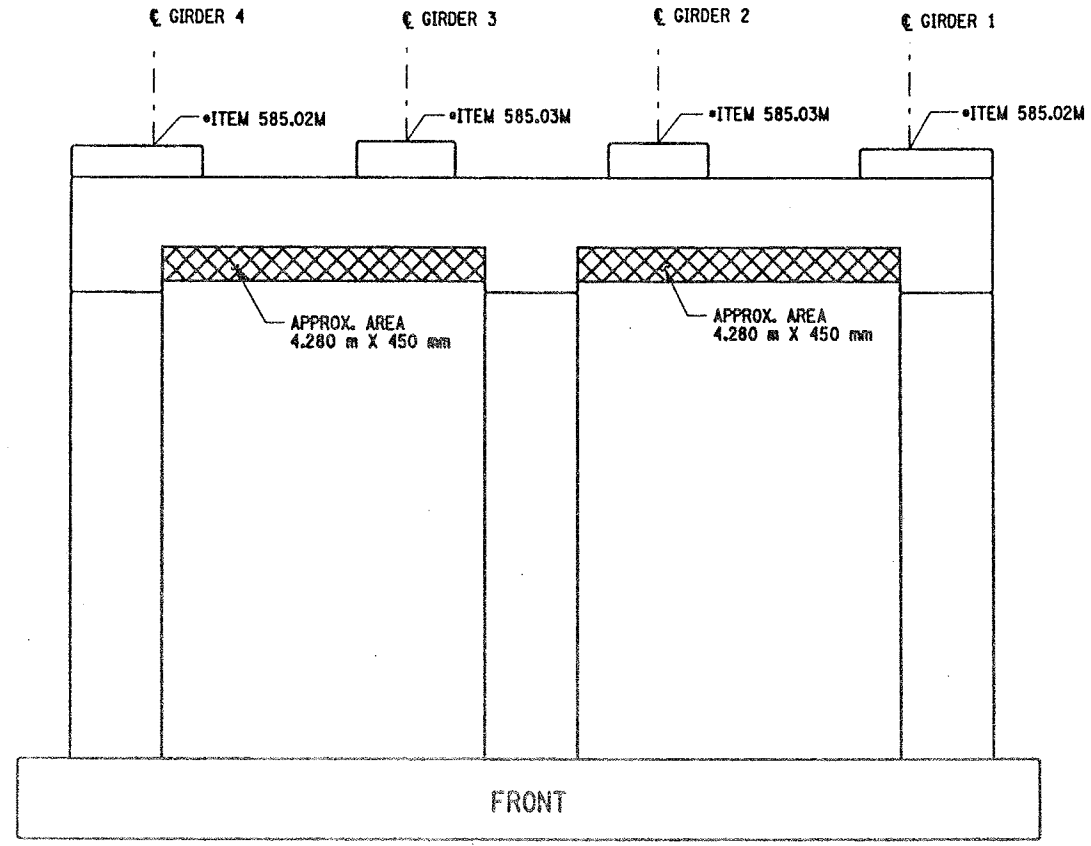

PIER 6 BACK FACE (LOOKING SOUTH)

BIN 1093572

SCALE: 1 TO 50

LIST OF ITEMS USED:

ITEM 15565.4302M- BRIDGE BEARING RESTORATION (EA)
ITEM 582.07M - REM. OF STRUC. CONC. - REPL. W/ VERT. OVERHEAD PATCH MATL. (SM)
ITEM 585.02M - STRUCTURAL LIFTING OPERATIONS - TYPE B (EA)
ITEM 585.03M - STRUCTURAL LIFTING OPERATION - TYPE C (EA)

FED ROAD REG. NO.	STATE	CONTRACT NO.	SHEET NO.	TOTAL SHEETS
1	N.Y.	D259214	321	432

BRIDGE REHABILITATION PROJECT (ELEMENT SPECIFIC)
VARIOUS BRIDGES ON INTERSTATE 481
TOWNS OF DEWITT AND CICERO
ONONDAGA COUNTY
P.I.N. 305613 B.I.N. 1093572

NOTES:

1. ALL REINFORCEMENT TO REMAIN.
2. RESTORE TO ORIGINAL DIMENSIONS.
3. PEDESTALS NUMERICALLY NUMBERED FROM WEST TO EAST.
4. FOR THE CONCRETE REPAIR AREAS, THE CONCRETE SHALL BE REMOVED TO AT LEAST 40mm MIN. BEYOND THE ENCOUNTERED REINFORCEMENT AND TO SOUND CONCRETE, A.O.B.E.
5. ELEVATIONS SHOWN ARE FROM ORIGINAL CONTRACT PLANS F.I.S.H. 70-7 AND ARE FOR REFERENCE ONLY.
6. REMOVAL DIMENSIONS SHOWN ON PLANS ARE ESTIMATED AND SHALL BE FIELD VERIFIED BY THE CONTRACTOR AND ENGINEER PRIOR TO BEGINNING OF REMOVAL OPERATIONS A.O.B.E.
7. PERFORM BEARING RESTORATION TO ALL EXPANSION BEARINGS (TO INCLUDE RESETTING OF UNDEREXTENDED OR OVEREXTENDED BEARINGS). SEE DWG. BR-10 & BR-11 FOR BEARING RESTORATION DETAILS. SEE DWG. PR17-1S FOR BEARING RESTORATION NOTES.
8. SEE DWG. PR17-2S FOR SECTION "A-A".
9. ALL CONCRETE REMOVAL SHALL BE SAWCUT TO PRODUCE NEAT REMOVAL LINES. COST TO BE INCLUDED IN THE PRICE BID FOR ITEM 582.05M AND 582.07M.
10. FOR JACKING NOTES SEE DWG. PR17-1S.

• PERFORM STRUCTURAL LIFTING UNDER ITEM 585.02M - STRUCTURAL LIFTING OPERATIONS - TYPE B (LIFTING AT A PIER) OR ITEM 585.03M - STRUCTURAL LIFTING OPERATIONS - TYPE C (LIFTING AT A PIER WHERE THE CONTRACTOR SHALL BE REQUIRED TO LIFT OFF THE FOOTING AND/OR GROUND LEVEL.

JACKING LOADS:

D.L. = 75 MT
L.L. = 50 MT
TOTAL = 125 MT

LEGEND

ITEM 582.07M - REMOVAL OF STRUCTURAL CONCRETE - REPLACE WITH VERTICAL OVERHEAD PATCH MATERIAL. (SM)

ALL DIMENSIONS ARE IN mm UNLESS OTHERWISE NOTED

AS BUILT REVISIONS

SIGNATURE DATE

INTERSTATE 481 NB
OVER
CSX RAILROAD YARD
PIER 6

STATE OF NEW YORK
DEPARTMENT OF TRANSPORTATION

FILENAME	REGION	DATE	DRAWING NO.
305613AEP6A	3	10/02	PR17-6N

DESIGN SUPERVISOR ____ JOB MANAGER ____ DESIGNED BY ____ DRAFTED BY ____ ESTIMATED BY ____ CHECKED BY ____ CHECKED BY

FED ROAD REG. NO.	STATE	CONTRACT NO.	SHEET NO.	TOTAL SHEETS
1	N.Y.	D259214	322	432

BRIDGE REHABILITATION PROJECT (ELEMENT SPECIFIC)
VARIOUS BRIDGES ON INTERSTATE 481
TOWNS OF DEWITT AND CICERO
ONONDAGA COUNTY
P.I.N. 305613 B.I.N. 1093572

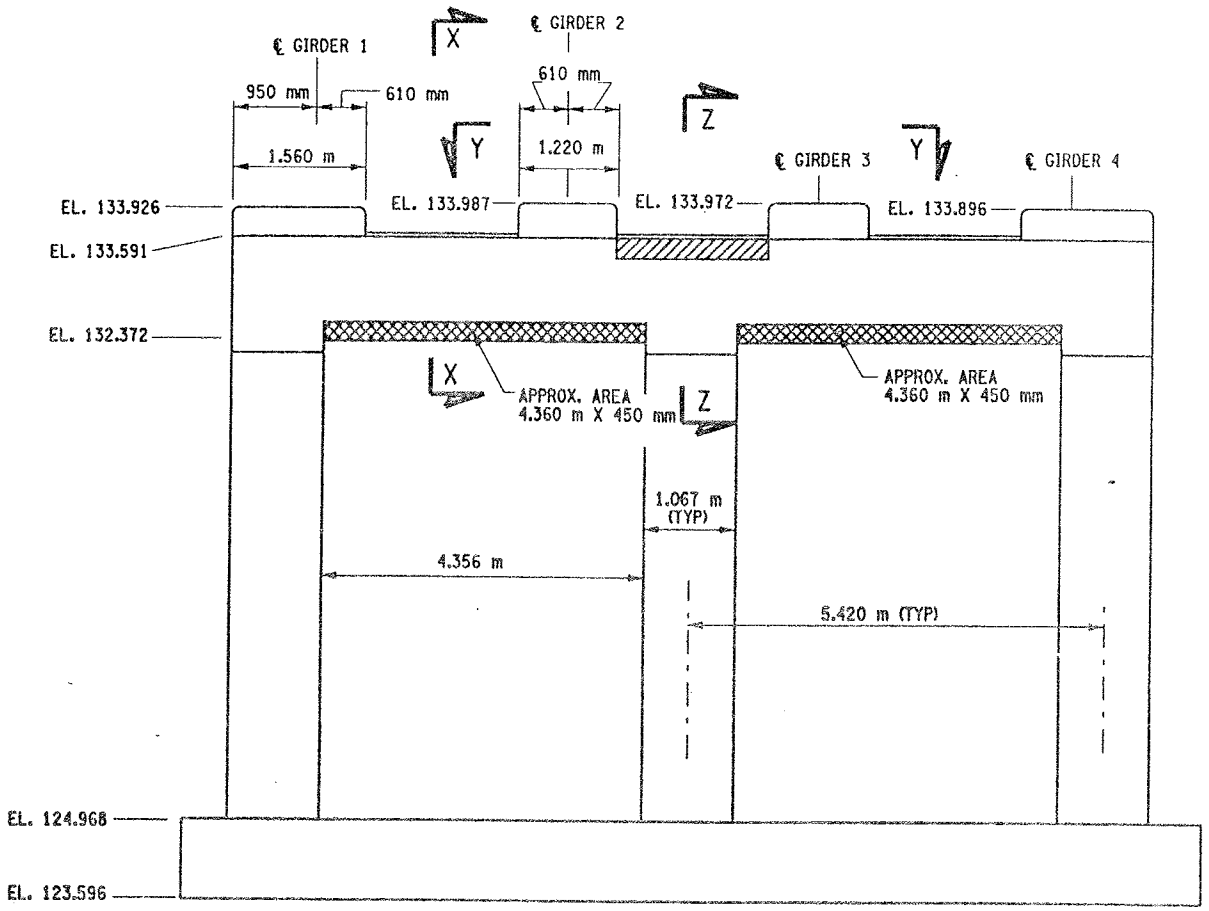

PIER 7 - FRONT FACE (LOOKING NORTH)
BIN 1093572
SCALE: 1 TO 50

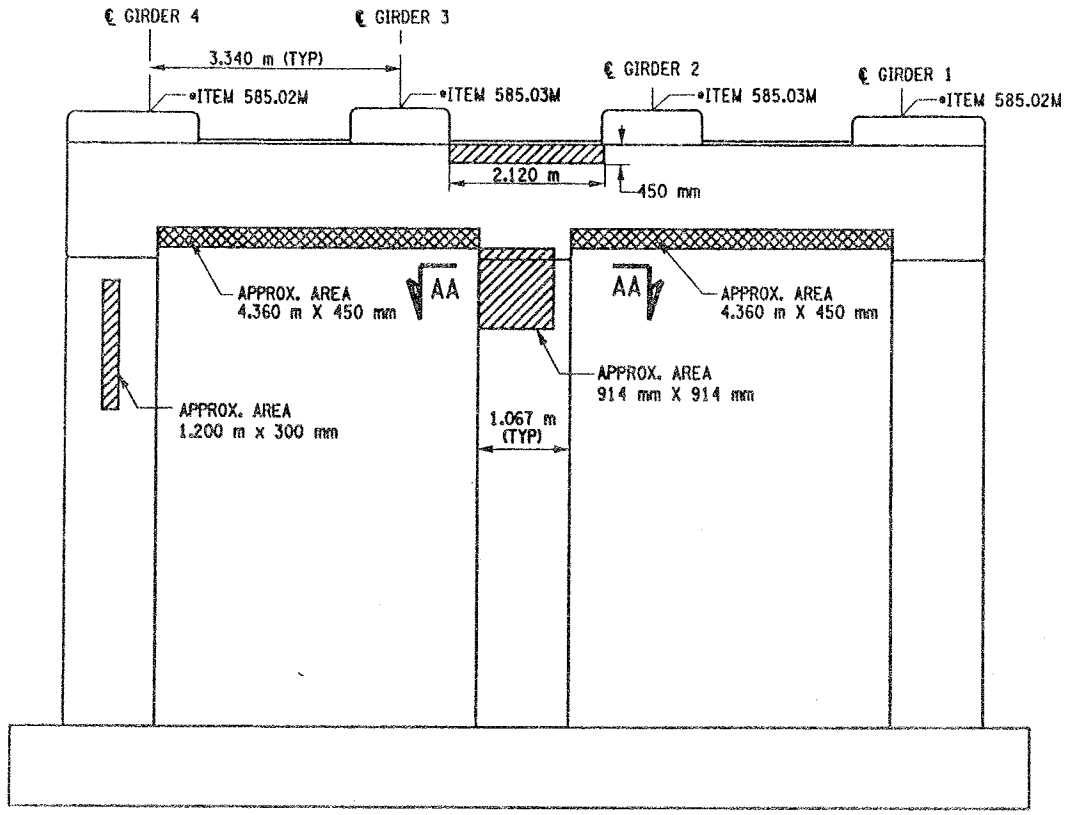

PIER 7 - BACK FACE (LOOKING SOUTH)
BIN 1093572
SCALE: 1 TO 50

NOTES:

1. ALL REINFORCEMENT TO REMAIN.
2. RESTORE TO ORIGINAL DIMENSIONS.
3. PEDESTALS NUMERICALLY NUMBERED FROM WEST TO EAST.
4. FOR THE CONCRETE REPAIR AREAS, THE CONCRETE SHALL BE REMOVED TO AT LEAST 40mm MIN. BEYOND THE ENCOUNTERED REINFORCEMENT AND TO SOUND CONCRETE, A.O.B.E.
5. ELEVATIONS SHOWN ARE FROM ORIGINAL CONTRACT PLANS F.I.S.H. 70-7 AND ARE FOR REFERENCE ONLY.
6. REMOVAL DIMENSIONS SHOWN ON PLANS ARE ESTIMATED AND SHALL BE FIELD VERIFIED BY THE CONTRACTOR PRIOR TO BEGINNING OF REMOVAL OPERATIONS A.O.B.E.
7. PERFORM BEARING RESTORATION TO ALL EXPANSION BEARINGS (TO INCLUDE RESETTING OF UNDEREXTENDED OR OVEREXTENDED BEARINGS). SEE DWG. PR17-1S FOR BEARING RESTORATION NOTES. SEE DWG. BR-10 & BR-11 FOR BEARING RESTORATION DETAILS.
8. ALL CONCRETE REMOVAL SHALL BE SAWCUT TO PRODUCE NEAT REMOVAL LINES. COST TO BE INCLUDED IN THE PRICE BID FOR ITEM 582.05M AND 582.07M.
9. FOR JACKING NOTES SEE DWG PR17-1S.

* PERFORM STRUCTURAL LIFTING UNDER ITEM 585.02M - STRUCTURAL LIFTING OPERATIONS - TYPE B (LIFTING AT A PIER) OR ITEM 585.03M - STRUCTURAL LIFTING OPERATIONS - TYPE C (LIFTING AT A PIER WHERE THE CONTRACTOR SHALL BE REQUIRED TO LIFT OFF THE FOOTING AND/OR GROUND LEVEL.

JACKING LOADS:

D.L. = 75 MT
L.L. = 50 MT
TOTAL = 125 MT

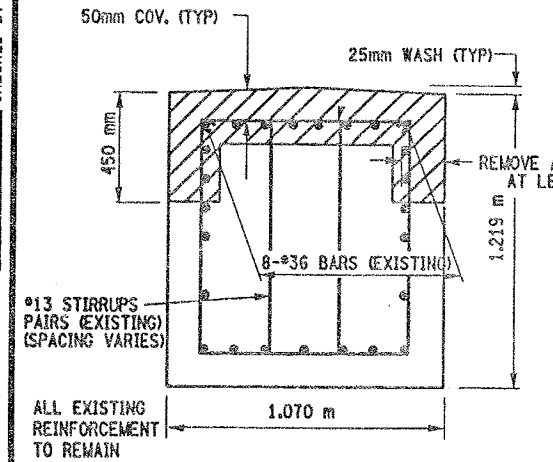

SECTION Z-Z
NOT TO SCALE

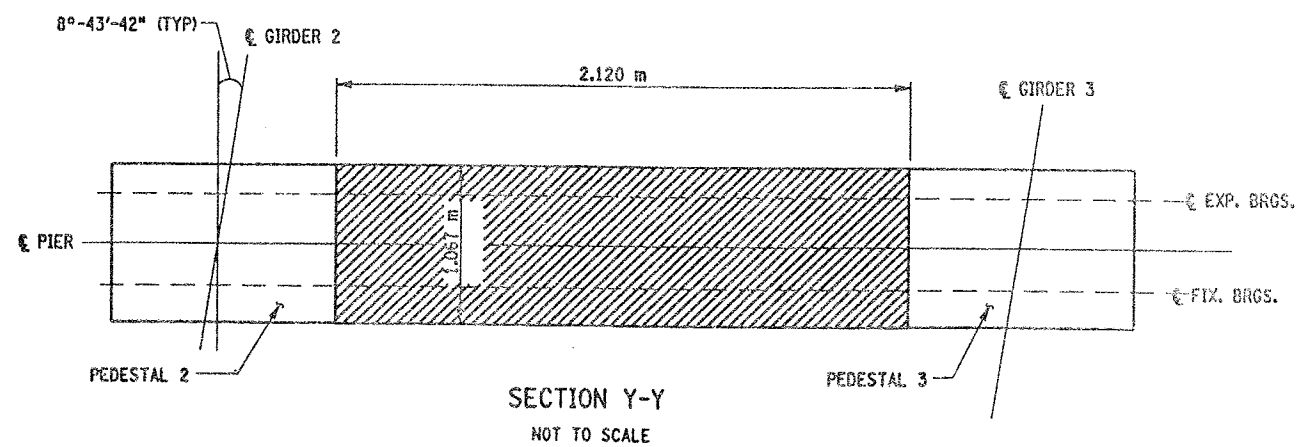

SECTION Y-Y
NOT TO SCALE

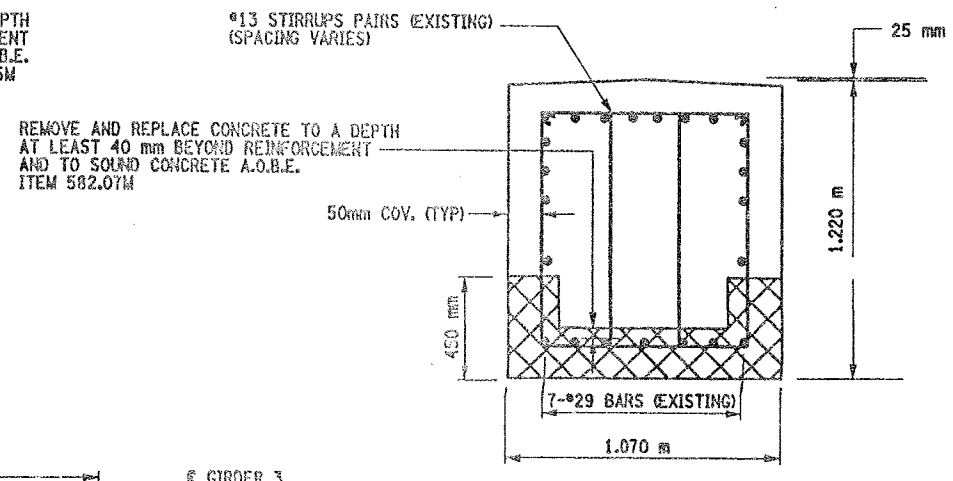

ALL EXISTING REINFORCEMENT TO REMAIN

SECTION X-X
NOT TO SCALE

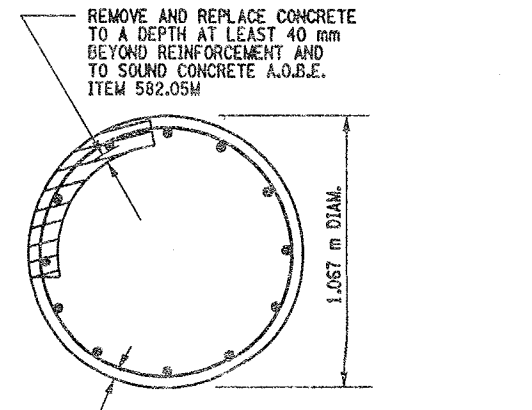

THE CONTRACTOR SHALL ONLY REMOVE AND REPLACE CONCRETE ON 1/4 OF THE CIRCUMFERENCE OF THE COLUMN SIMULTANEOUSLY, FOR THE FULL CURING PERIOD. SEE DETAIL "A" ON DWG. PR17-2S

SECTION AA-AA

NOT TO SCALE

LEGEND:

ITEM 582.05M - REMOVAL OF STRUCTURAL CONCRETE- REPLACE WITH CLASS A CONCRETE. (CM)

ITEM 582.07M - REMOVAL OF STRUCTURAL CONCRETE - REPLACE WITH VERTICAL OVERHEAD PATCH MATERIAL. (SM)

LIST OF ITEMS USED:

ITEM 15565.4302M - BRIDGE BEARING RESTORATION (EA)
ITEM 582.05M - REM. OF STRUC. CONC. - REPLACE WITH CLASS A CONCRETE (CM)
ITEM 582.07M - REM. OF STRUC. CONC. - REPL. W/ VERT. OVERHEAD PATCH MAT'L (SM)
ITEM 585.02M - STRUCTURAL LIFTING OPERATIONS - TYPE B (EA)
ITEM 585.03M - STRUCTURAL LIFTING OPERATION - TYPE C (EA)

ALL DIMENSIONS ARE IN mm UNLESS OTHERWISE NOTED

AS BUILT REVISIONS

SIGNATURE DATE

INTERSTATE 481 NB
OVER
CSX RAILROAD YARD
PIER 7

STATE OF NEW YORK
DEPARTMENT OF TRANSPORTATION

FILENAME	REGION	DATE	DRAWING NO.
305613AE.PTA	3	10/02	PR17-7N

DESIGN SUPERVISOR ____ JOB MANAGER ____ DESIGNED BY ____ ESTIMATED BY ____ DRAFTED BY ____ CHECKED BY ____

FED ROAD REG. NO.	STATE	CONTRACT NO.	SHEET NO.	TOTAL SHEETS
1	N.Y.	D259214	323	432

BRIDGE REHABILITATION PROJECT (ELEMENT SPECIFIC)
VARIOUS BRIDGES ON INTERSTATE 481
TOWNS OF DEWITT AND CICERO
ONONDAGA COUNTY
P.I.N. 305613 B.I.N. 1093572

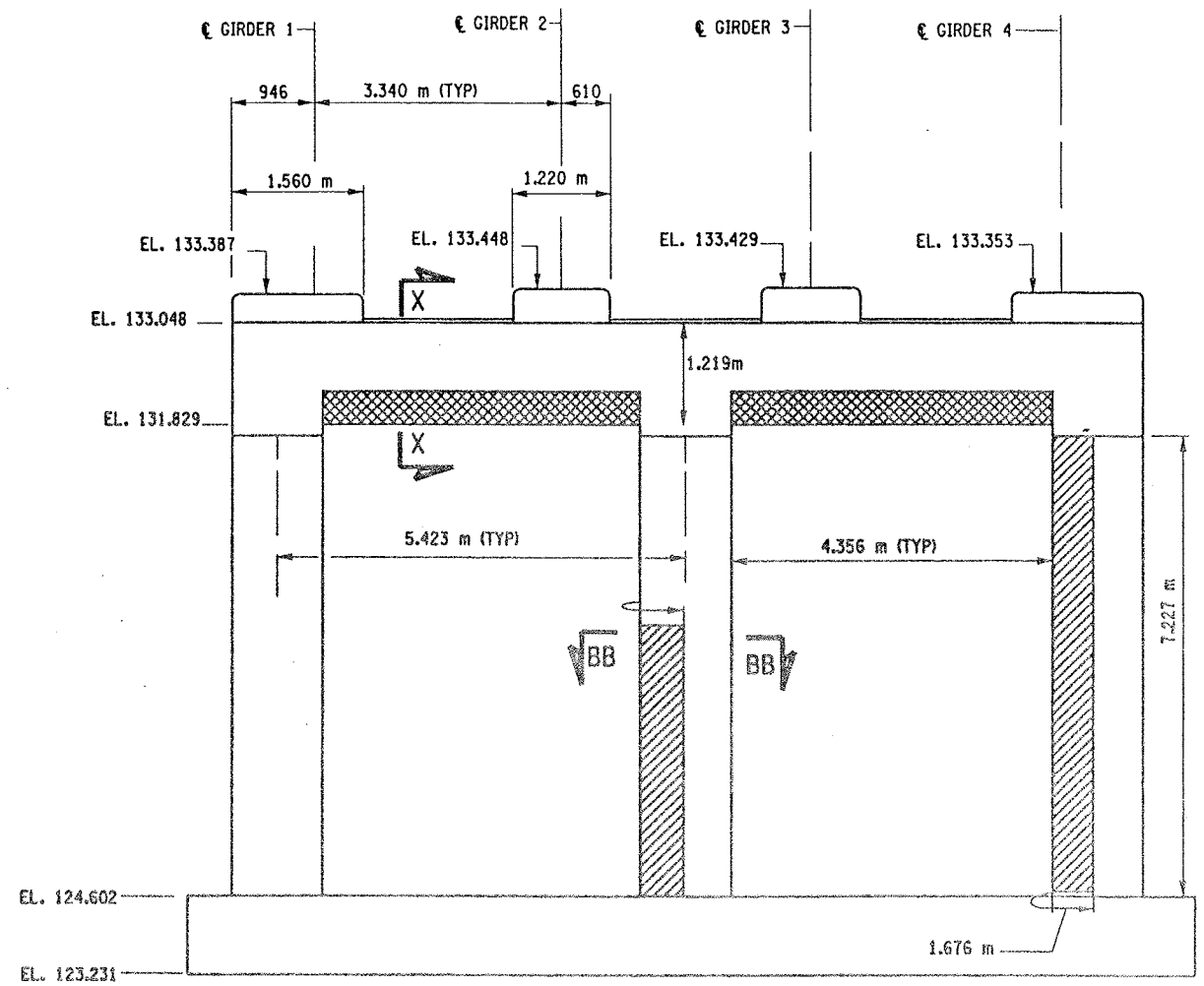

PIER 8 - FRONT FACE (LOOKING NORTH)
BIN 1093572
SCALE: 1 TO 50

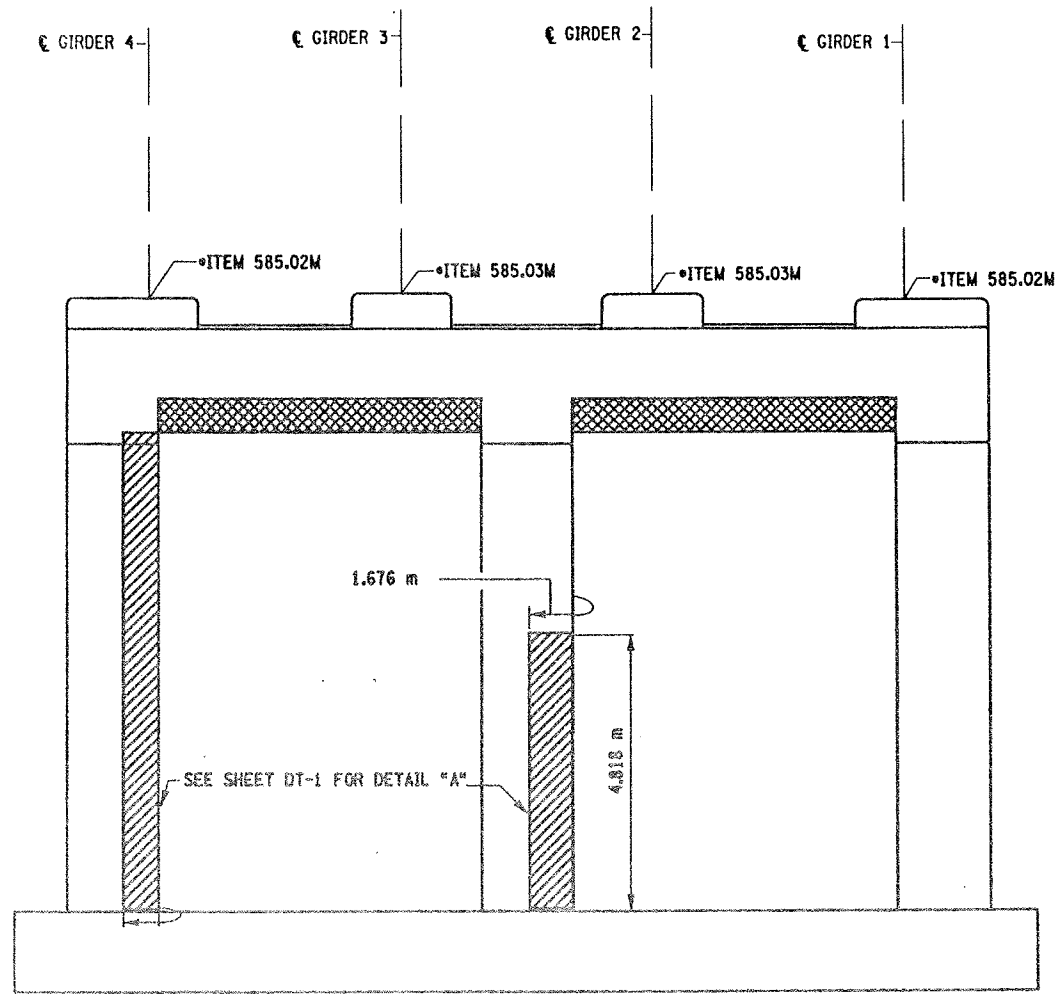

PIER 8 - BACK FACE (LOOKING SOUTH)
BIN 1093572
SCALE: 1 TO 50

NOTES:

1. ALL REINFORCEMENT TO REMAIN.
2. RESTORE TO ORIGINAL DIMENSIONS.
3. PEDESTALS NUMERICALLY NUMBERED FROM WEST TO EAST.
4. FOR THE CONCRETE REPAIR AREAS, THE CONCRETE SHALL BE REMOVED TO AT LEAST 40mm MIN. BEYOND THE ENCOUNTERED REINFORCEMENT AND TO SOUND CONCRETE, A.O.B.E.
5. ELEVATIONS SHOWN ARE FROM ORIGINAL CONTRACT PLANS F.I.S.H. 70-7 AND ARE FOR REFERENCE ONLY.
6. REMOVAL DIMENSIONS SHOWN ON PLANS ARE ESTIMATED AND SHALL BE FIELD VERIFIED BY THE CONTRACTOR AND ENGINEER PRIOR TO BEGINNING OF REMOVAL OPERATIONS A.O.B.E.
7. PERFORM BEARING RESTORATION TO ALL EXPANSION BEARINGS (TO INCLUDE RESETTING OF UNDEREXTENDED OR OVEREXTENDED BEARINGS). SEE DWG. BR-10 & BR-11 FOR BEARING RESTORATION DETAILS. SEE DWG. PR17-1S FOR BEARING RESTORATION NOTES.
8. SEE DWG. PR17-12S FOR SECTION BB-BB.
9. SEE DWG. PR17-7N FOR SECTION X-X.
10. ALL CONCRETE REMOVAL SHALL BE SAWCUT TO PRODUCE NEAT REMOVAL LINES. COST TO BE INCLUDED IN THE PRICE BID FOR ITEM 582.05M AND 582.07M.
11. FOR JACKING NOTES SEE DWG PR17-1S.

• PERFORM STRUCTURAL LIFTING UNDER ITEM 585.02M - STRUCTURAL LIFTING OPERATIONS - TYPE B (LIFTING AT A PIER) OR ITEM 585.03M - STRUCTURAL LIFTING OPERATIONS - TYPE C (LIFTING AT A PIER WHERE THE CONTRACTOR SHALL BE REQUIRED TO LIFT OFF THE FOOTING AND/OR GROUND LEVEL.

JACKING LOADS:

D.L. = 75 MT
L.L. = 50 MT
TOTAL = 125 MT

LEGEND:

ITEM 582.05M - REMOVAL OF STRUCTURAL CONCRETE- REPLACE WITH CLASS A CONCRETE (CM)

ITEM 582.07M - REMOVAL OF STRUCTURAL CONCRETE - REPLACE WITH VERTICAL OVERHEAD PATCH MATERIAL. (SM)

ALL DIMENSIONS ARE IN mm UNLESS OTHERWISE NOTED

LIST OF ITEMS USED:

ITEM 19565.4302M - BRIDGE BEARING RESTORATION (EA)
ITEM 582.05M - REM. OF STRUC. CONC. - REPLACE WITH CLASS A CONCRETE (CM)
ITEM 582.07M - REM. OF STRUC. CONC. - REPL. W/ VERT. OVERHEAD PATCH MATL. (SM)
ITEM 585.02M - STRUCTURAL LIFTING OPERATIONS - TYPE B (EA)
ITEM 585.03M - STRUCTURAL LIFTING OPERATION - TYPE C (EA)

AS BUILT REVISIONS

SIGNATURE DATE

INTERSTATE 481 NB
OVER
CSX RAILROAD YARD
PIER 8

STATE OF NEW YORK
DEPARTMENT OF TRANSPORTATION

FILENAME	REGION	DATE	DRAWING NO.
305613AE.P8A	3	10/02	PR17-8N

DESIGN SUPERVISOR ____ JOB MANAGER ____ DESIGNED BY ____ ESTIMATED BY ____ DRAFTED BY ____ CHECKED BY ____

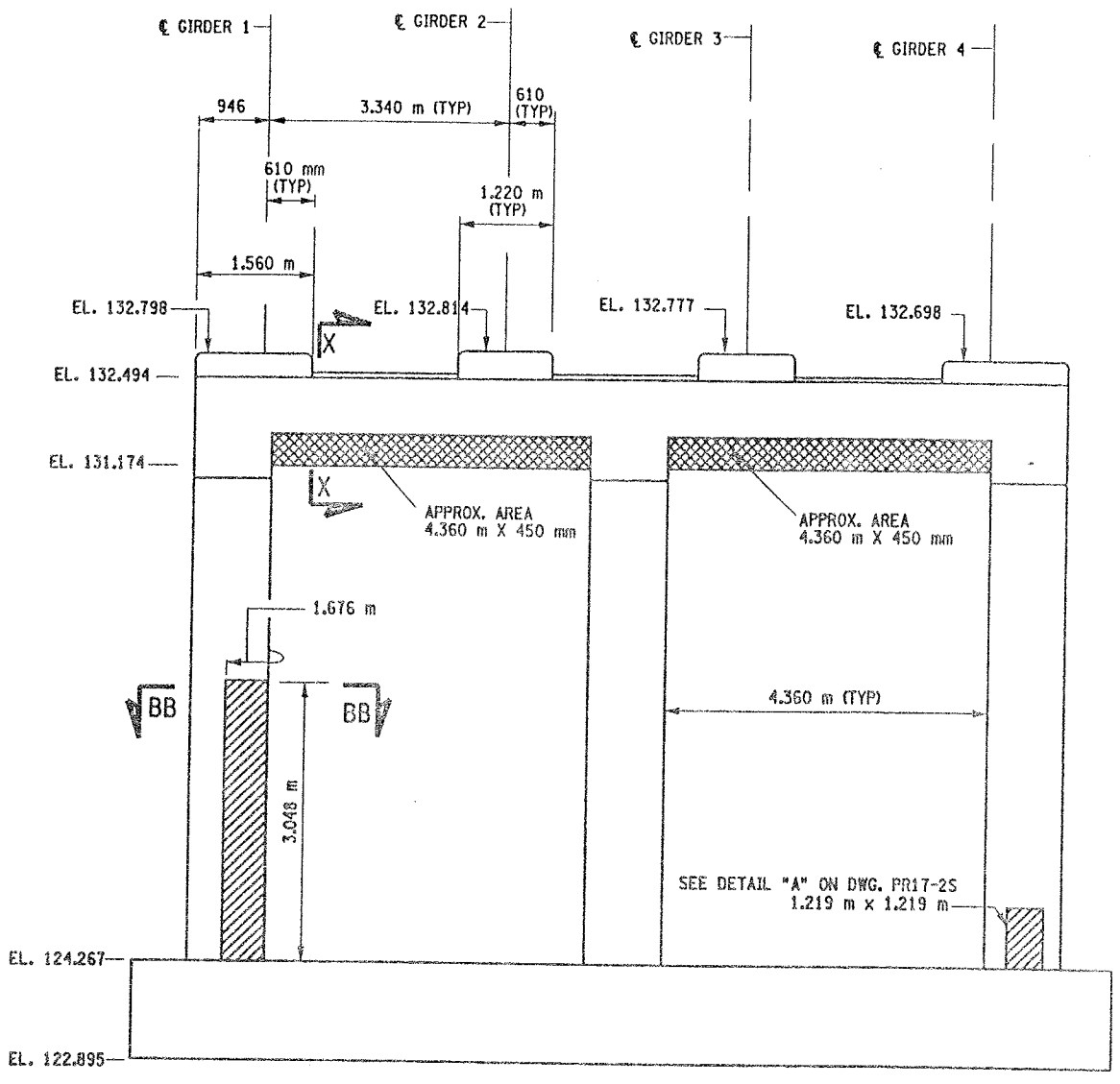

PIER 9 - FRONT FACE (LOOKING NORTH)

BIN 1093572

SCALE: 1 TO 50

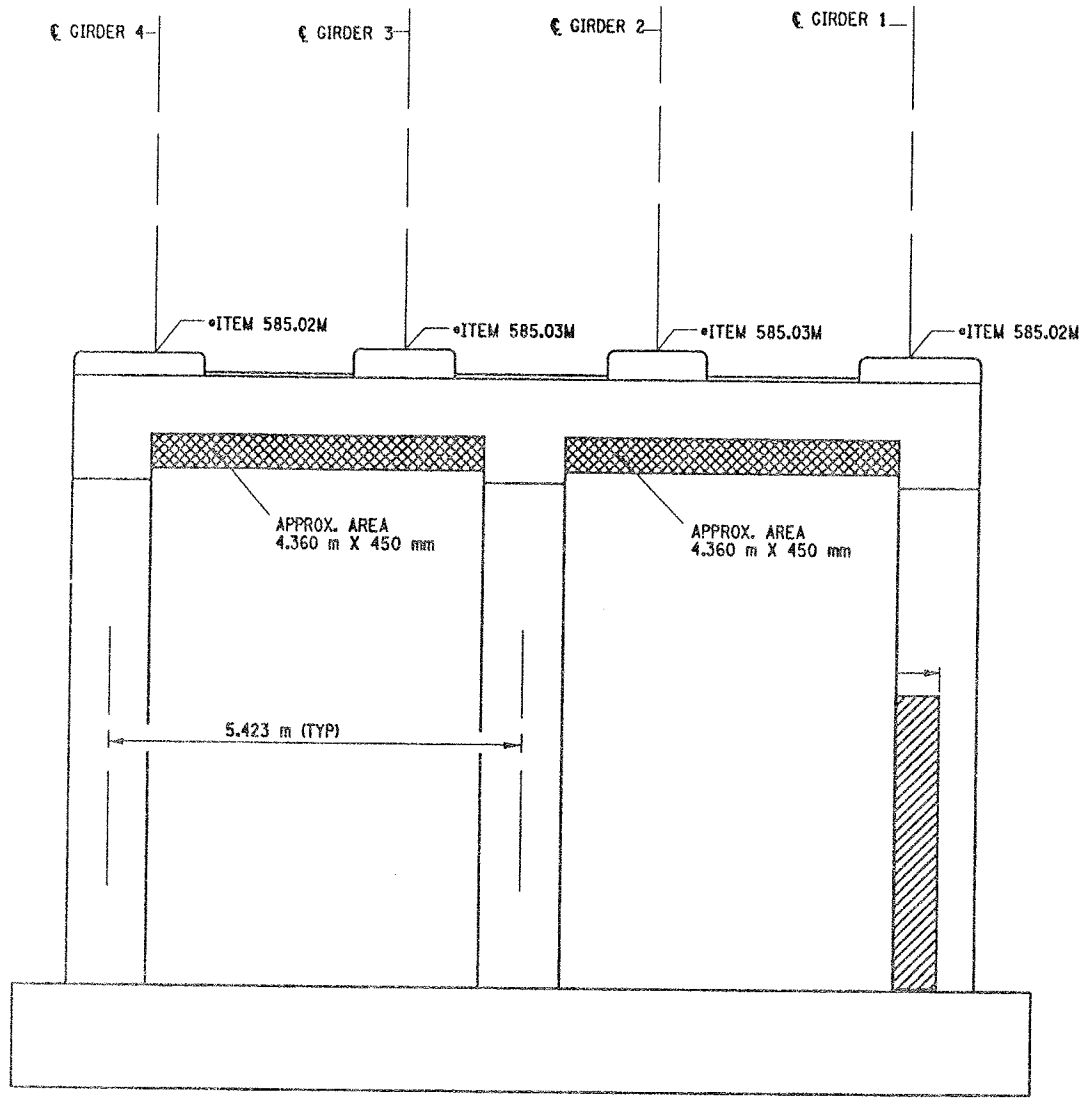

PIER 9 - BACK FACE (LOOKING SOUTH)

BIN 1093572

SCALE: 1 TO 50

LIST OF ITEMS USED:

ITEM 15565.4302M - BRIDGE BEARING RESTORATION (EA)
ITEM 582.05M - REM. OF STRUC. CONC. - REPLACE WITH CLASS A CONCRETE (CM)
ITEM 582.07M - REM. OF STRUC. CONC. - REPL. W/ VERT. OVERHEAD PATCH MAT.L (SM)
ITEM 585.02M - STRUCTURAL LIFTING OPERATIONS - TYPE B (EA)
ITEM 585.03M - STRUCTURAL LIFTING OPERATION - TYPE C (EA)

FED ROAD REC. NO.	STATE	CONTRACT NO.	SHEET NO.	TOTAL SHEETS
1	N.Y.	D259214	324	432

BRIDGE REHABILITATION PROJECT (ELEMENT SPECIFIC)

VARIOUS BRIDGES ON INTERSTATE 481

TOWNS OF DEWITT AND CICERO

ONONDAGA COUNTY

P.I.N. 305613 | B.I.N. 1093572

NOTES:

1. ALL REINFORCEMENT TO REMAIN.
2. RESTORE TO ORIGINAL DIMENSIONS.
3. PEDESTALS NUMERICALLY NUMBERED FROM WEST TO EAST.
4. FOR THE CONCRETE REPAIR AREAS, THE CONCRETE SHALL BE REMOVED TO AT LEAST 40mm MIN. BEYOND THE ENCOUNTERED REINFORCEMENT AND TO SOUND CONCRETE, A.O.B.E.
5. ELEVATIONS SHOWN ARE FROM ORIGINAL CONTRACT PLANS F.I.S.H. 70-7 AND ARE FOR REFERENCE ONLY.
6. REMOVAL DIMENSIONS SHOWN ON PLANS ARE ESTIMATED AND SHALL BE FIELD VERIFIED BY THE CONTRACTOR PRIOR TO BEGINNING OF REMOVAL OPERATIONS A.O.B.E.
7. PERFORM BEARING RESTORATION TO ALL EXPANSION BEARINGS (TO INCLUDE RESETTING OF UNDEREXTENDED OR OVEREXTENDED BEARINGS). SEE DWG. PR-1S FOR BEARING RESTORATION NOTES. SEE DWG. BR-10 & BR-11 FOR BEARING RESTORATION DETAILS.
8. SEE DWG. PR17- 12S FOR SECTION BB-BB.
9. ALL CONCRETE REMOVAL SHALL BE SAWCUT TO PRODUCE NEAT REMOVAL LINES. COST TO BE INCLUDED IN THE PRICE BID FOR ITEM 582.05M AND 582.07M.
10. FOR JACKING NOTES SEE DWG PR17-1S
11. SEE DWG. PR17-7N FOR SECTION X - X.

• PERFORM STRUCTURAL LIFTING UNDER ITEM 585.02M - STRUCTURAL LIFTING OPERATIONS - TYPE B (LIFTING AT A PIER) OR ITEM 585.03M - STRUCTURAL LIFTING OPERATIONS - TYPE C (LIFTING AT A PIER WHERE THE CONTRACTOR SHALL BE REQUIRED TO LIFT OFF THE FOOTING AND/OR GROUND LEVEL.

JACKING LOADS:

D.L. = 75 MT
L.L. = 50 MT
TOTAL = 125 MT

LEGEND:

ITEM 582.05M - REMOVAL OF STRUCTURAL CONCRETE- REPLACE WITH CLASS A CONCRETE. (CM)

ITEM 582.07M - REMOVAL OF STRUCTURAL CONCRETE - REPLACE WITH VERTICAL OVER-HEAD PATCH MATERIAL. (SM)

ALL DIMENSIONS ARE IN mm UNLESS OTHERWISE NOTED

AS BUILT REVISIONS

SIGNATURE DATE

INTERSTATE ROUTE 481 NB
OVER CSX RAILROAD YARD
PIER 9

STATE OF NEW YORK
DEPARTMENT OF TRANSPORTATION

FILENAME	REGION	DATE	DRAWING NO.
305613AE.P9A	3	10/02	PR17-9N

DESIGN SUPERVISOR ____ JOB MANAGER ____ ESTIMATED BY ____ DESIGNED BY ____ DRAFTED BY ____ CHECKED BY ____ CHECKED BY ____

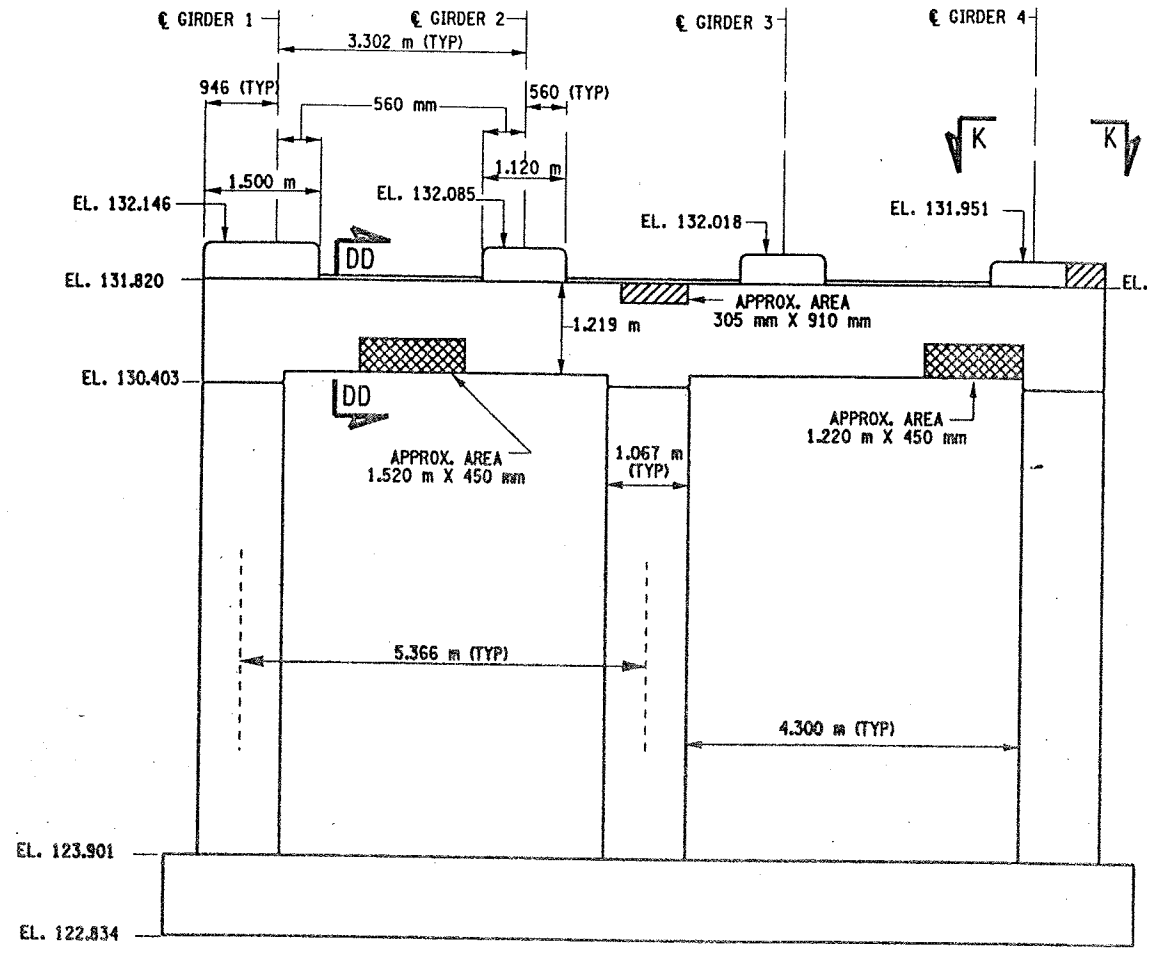

PIER 10 - FRONT FACE (LOOKING NORTH)
BIN 1093572
SCALE: 1 TO 50

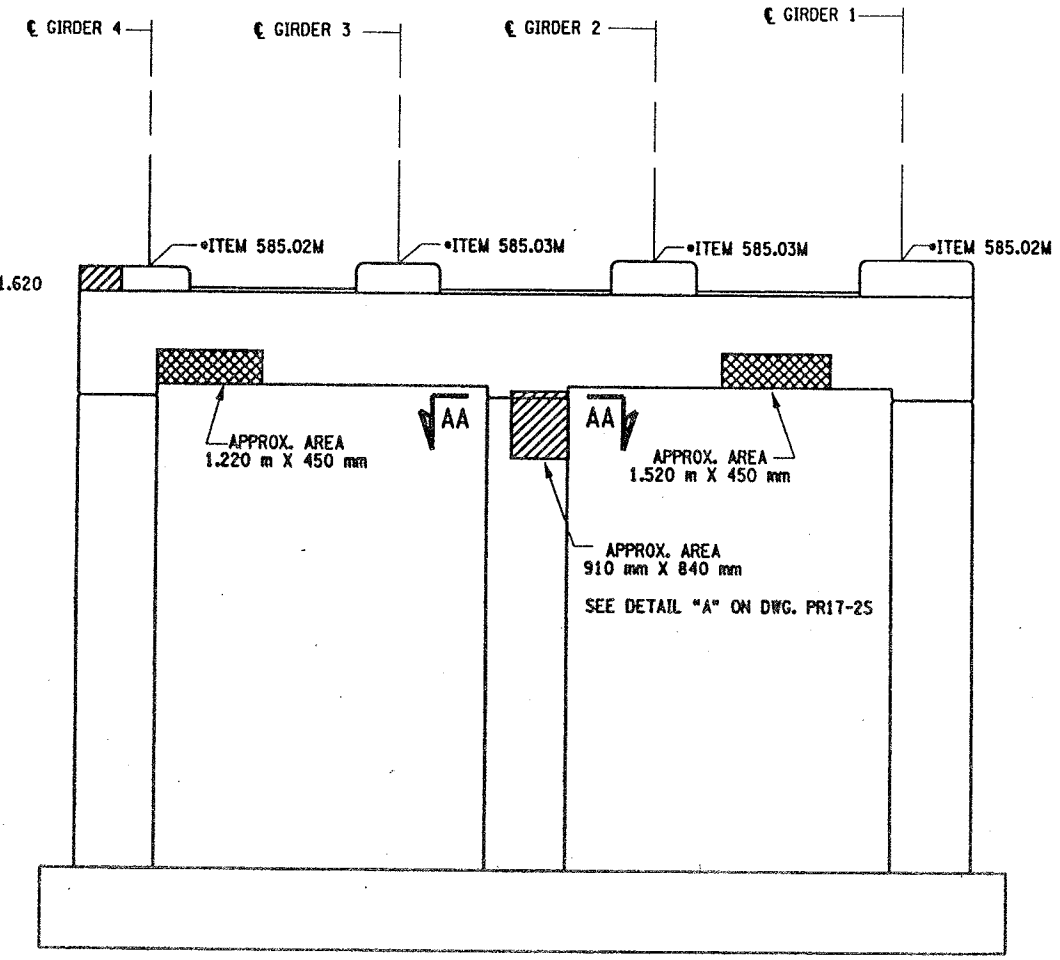

PIER 10 - BACK FACE (LOOKING SOUTH)
BIN 1093572
SCALE: 1 TO 50

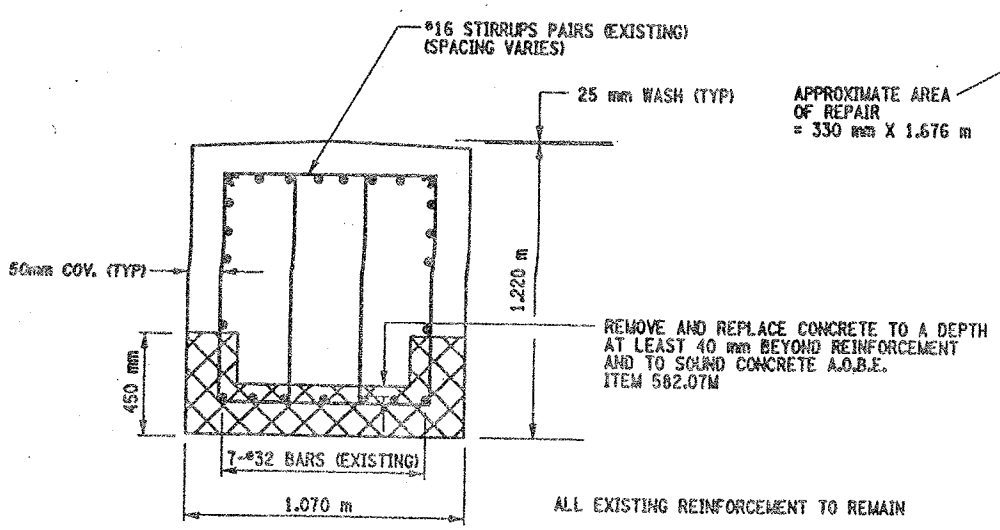

SECTION DD-DD
NOT TO SCALE

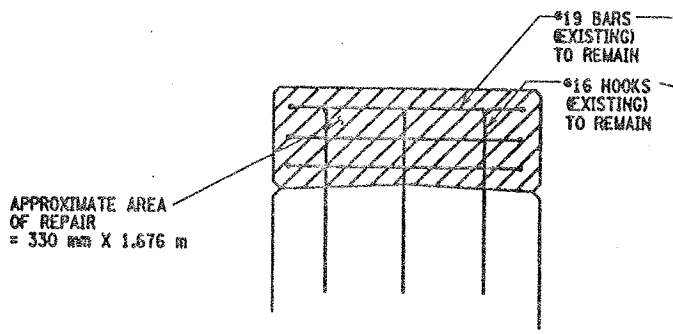

SECTION N-N
NOT TO SCALE

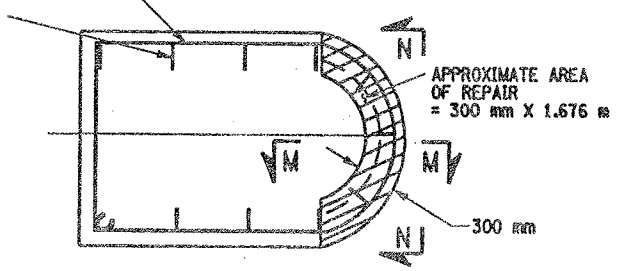

SECTION K-K
NOT TO SCALE

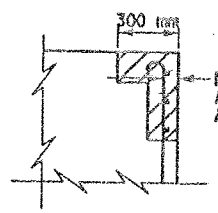

SECTION M-M
NOT TO SCALE

LIST OF ITEMS USED:

ITEM 15565.4302M - BRIDGE BEARING RESTORATION (EA)
ITEM 582.05M - REM. OF STRUC. CONC. - REPLACE WITH CLASS A CONCRETE (CM)
ITEM 582.07M - REM. OF STRUC. CONC. - REPL. W/ VERT. OVERHEAD PATCH MATL. (SM)
ITEM 585.02M - STRUCTURAL LIFTING OPERATIONS - TYPE B (EA)
ITEM 585.03M - STRUCTURAL LIFTING OPERATION - TYPE C (EA)

FED ROAD REG. NO.	STATE	CONTRACT NO.	SHEET NO.	TOTAL SHEETS
1	N.Y.	D259214	325	432

BRIDGE REHABILITATION PROJECT (ELEMENT SPECIFIC)
VARIOUS BRIDGES ON INTERSTATE 481
TOWNS OF DEWITT AND CICERO
ONONDAGA COUNTY
P.I.N. 305613 B.I.N. 1093572

NOTES:

1. ALL REINFORCEMENT TO REMAIN.
2. RESTORE TO ORIGINAL DIMENSIONS.
3. PEDESTALS NUMERICALLY NUMBERED FROM WEST TO EAST.
4. FOR THE CONCRETE REPAIR AREAS, THE CONCRETE SHALL BE REMOVED TO AT LEAST 40mm MIN. BEYOND THE ENCOUNTERED REINFORCEMENT AND TO SOUND CONCRETE, A.O.B.E.
5. ELEVATIONS SHOWN ARE FROM ORIGINAL CONTRACT PLANS F.I.S.H. 70-7 AND ARE FOR REFERENCE ONLY.
6. REMOVAL DIMENSIONS SHOWN ON PLANS ARE ESTIMATED AND SHALL BE FIELD VERIFIED BY THE CONTRACTOR PRIOR TO BEGINNING OF REMOVAL OPERATIONS A.O.B.E.
7. PERFORM BEARING RESTORATION TO ALL EXPANSION BEARINGS (TO INCLUDE RESETTING OF UNDEREXTENDED OR OVEREXTENDED BEARINGS). SEE DWG. PR17-1S FOR BEARING RESTORATION NOTES. SEE DWG. BR-10 & BR-11 FOR BEARING RESTORATION DETAILS.
8. FOR SECTION AA-AA SEE DWG. PR17-7N.
9. ALL CONCRETE REMOVAL SHALL BE SAWCUT TO PRODUCE NEAT REMOVAL LINES. COST TO BE INCLUDED IN THE PRICE BID FOR ITEM 582.05M AND ITEM 582.07M.
10. FOR JACKING NOTES SEE DWG PR17-1S.

• PERFORM STRUCTURAL LIFTING UNDER ITEM 585.02M - STRUCTURAL LIFTING OPERATIONS - TYPE B LIFTING AT A PIER) OR ITEM 585.03M - STRUCTURAL LIFTING OPERATIONS - TYPE C LIFTING AT A PIER WHERE THE CONTRACTOR SHALL BE REQUIRED TO LIFT OFF THE FOOTING AND/OR GROUND LEVEL.

JACKING LOADS:

D.L. = 75 MT
L.L. = 50 MT
TOTAL = 125 MT

LEGEND:

ITEM 582.05M - REMOVAL OF STRUCTURAL CONCRETE- REPLACE WITH CLASS A CONCRETE (CM)

ITEM 582.07M - REMOVAL OF STRUCTURAL CONCRETE - REPLACE WITH VERTICAL OVER-HEAD PATCH MATERIAL. (SM)

ALL DIMENSIONS ARE IN mm UNLESS OTHERWISE NOTED

AS BUILT REVISIONS

SIGNATURE DATE

INTERSTATE 481 NB
OVER
CSX RAILROAD YARD
PIER 10

STATE OF NEW YORK
DEPARTMENT OF TRANSPORTATION

FILENAME	REGION	DATE	DRAWING NO.
305613AE.P10	3	10/02	PR17-10N

DESIGNED BY
DRAFTED BY
CHECKED BY
ESTIMATED BY
JOB MANAGER
DESIGN SUPERVISOR

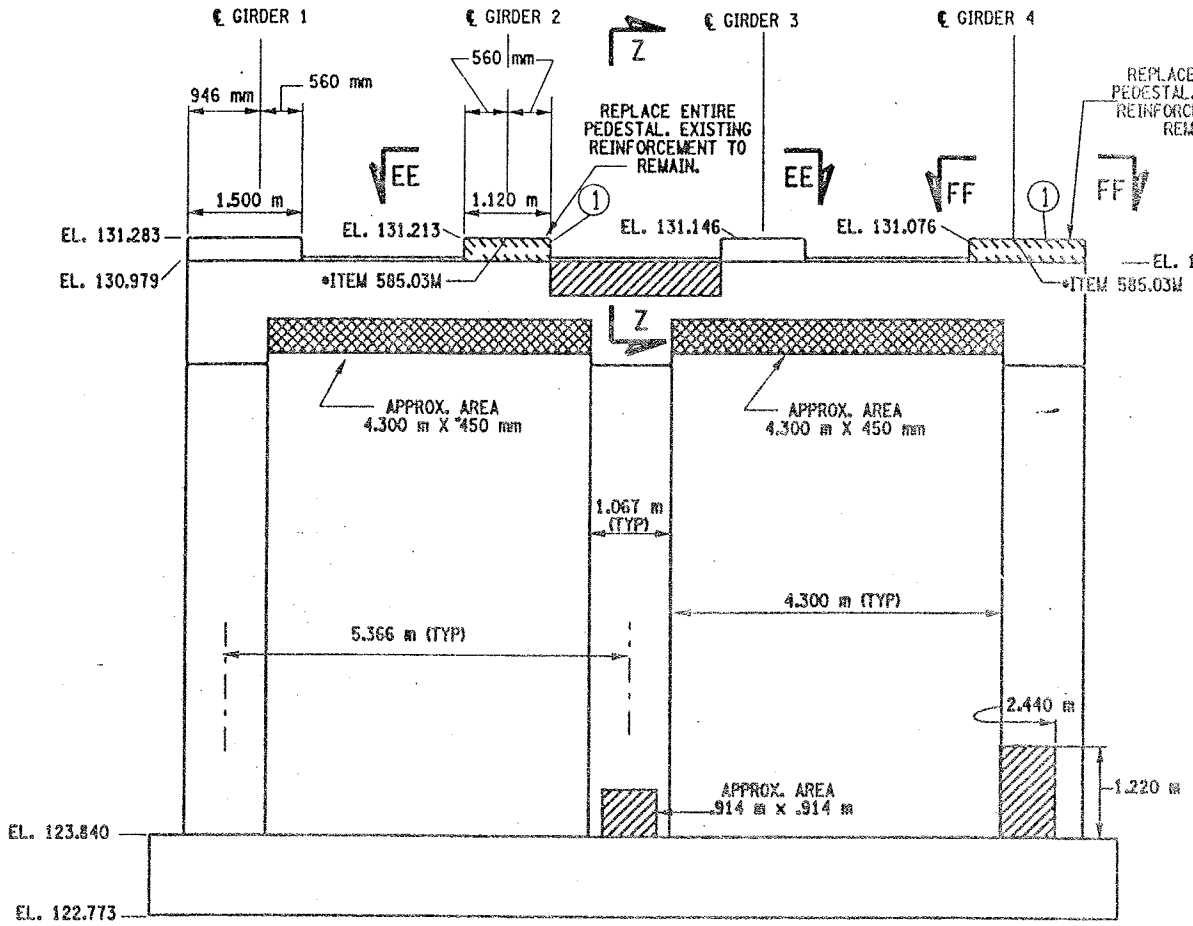

PIER 11 - FRONT FACE (LOOKING NORTH)
BIN 1093572
SCALE: 1 TO 50

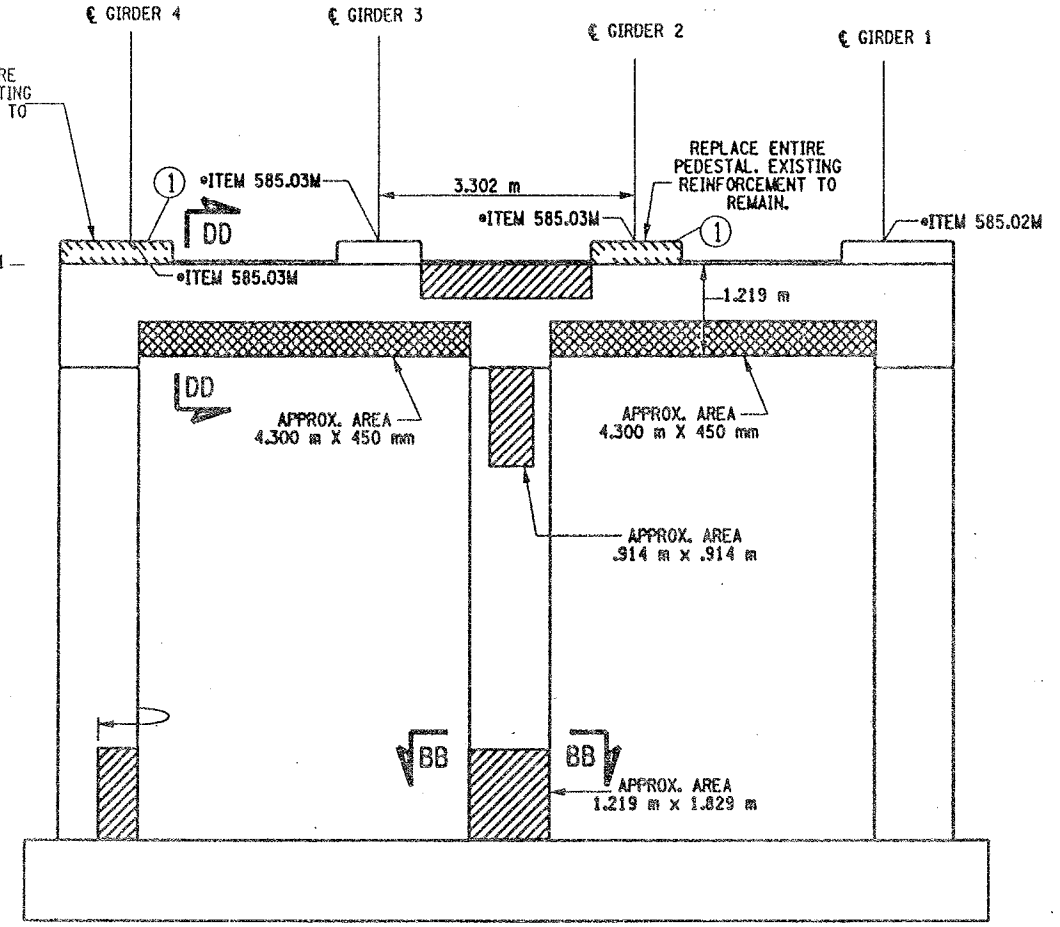

PIER 11- BACK FACE (LOOKING SOUTH)
BIN 1093572
SCALE: 1 TO 50

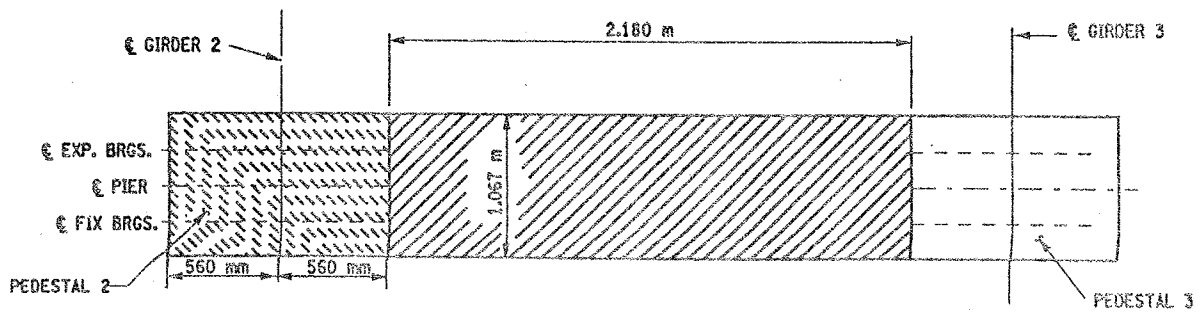

SECTION EE-EE
NOT TO SCALE

CONCRETE TABLE (m³)		
PLACEMENT	QUANTITY	ITEM NO.
1	0.80	555.0105M

(1) INDICATES CONCRETE PLACEMENT NUMBER

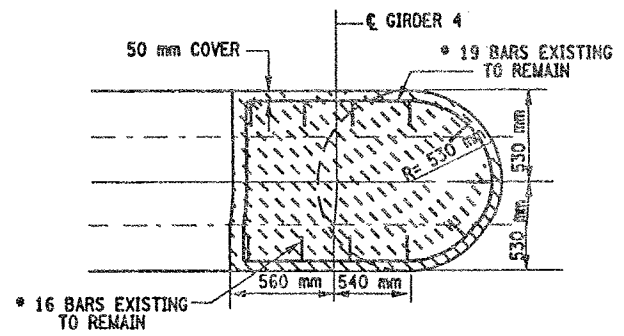

SECTION FF-FF
NOT TO SCALE

LIST OF ITEMS USED

ITEM 555.0105M - CONCRETE FOR STRUCTURES, CLASS A (CM)
ITEM 15565.4302M - BRIDGE BEARING RESTORATION (EA)
ITEM 580.01M - REMOVAL OF STRUCTURAL CONCRETE (CM)
ITEM 582.05M - REM. OF STRUC. CONC. - REPLACE WITH CLASS A CONCRETE (CM)
ITEM 582.07M - REM. OF STRUC. CONC. - REPL. W/ VERT. OVERHEAD PATCH MAT'L (SM)
ITEM 585.02M - STRUCTURAL LIFTING OPERATIONS - TYPE B (EA)
ITEM 585.03M - STRUCTURAL LIFTING OPERATION - TYPE C (EA)

FED ROAD REG. NO.	STATE	CONTRACT NO.	SHEET NO.	TOTAL SHEETS
1	N.Y.	D259214	326	432

BRIDGE REHABILITATION PROJECT (ELEMENT SPECIFIC)
VARIOUS BRIDGES ON INTERSTATE 481
TOWNS OF DEWITT AND CICERO
ONONDAGA COUNTY
P.I.N. 305613 | B.I.N. 1093572

NOTES:

1. ALL REINFORCEMENT TO REMAIN.
2. RESTORE TO ORIGINAL DIMENSIONS.
3. PEDESTALS NUMERICALLY NUMBERED FROM WEST TO EAST.
4. FOR THE CONCRETE REPAIR AREAS, THE CONCRETE SHALL BE REMOVED TO AT LEAST 40mm MIN. BEYOND THE ENCOUNTERED REINFORCEMENT AND TO SOUND CONCRETE, A.O.B.E.
5. ELEVATIONS SHOWN ARE FROM ORIGINAL CONTRACT PLANS F.I.S.H. 70-7 AND ARE FOR REFERENCE ONLY.
6. REMOVAL DIMENSIONS SHOWN ON PLANS ARE ESTIMATED AND SHALL BE FIELD VERIFIED BY THE CONTRACTOR PRIOR TO BEGINNING OF REMOVAL OPERATIONS A.O.B.E.
7. PERFORM BEARING RESTORATION TO ALL EXPANSION BEARINGS (TO INCLUDE RESETTING OF UNDEREXTENDED OR OVEREXTENDED BEARINGS). SEE DWG. PR17-1S FOR BEARING RESTORATION NOTES. SEE DWG. BR-10 & BR-11 FOR BEARING RESTORATION DETAILS.
8. SEE DWG PR17-10N FOR SECTION DD-DD.
9. SEE DWG. PR17-12S FOR SECTION BB-BB.
10. SEE DWG. PR17-7N FOR SECTION Z-Z.
11. PEDESTALS 2 AND 4 SHALL BE REPLACED TO EXISTING DIMENSIONS, ITEM 555.0105 M
12. ALL CONCRETE REMOVAL SHALL BE SAWCUT TO PRODUCE NEAT REMOVAL LINES. COST TO BE INCLUDED IN THE PRICE BID FOR ITEM 582.05M AND ITEM 582.07M.
13. FOR JACKING NOTES SEE DWG PR17-1S.

* PERFORM STRUCTURAL LIFTING UNDER ITEM 585.02M - STRUCTURAL LIFTING OPERATIONS - TYPE B (LIFTING AT A PIER) OR ITEM 585.03M - STRUCTURAL LIFTING OPERATIONS - TYPE C (LIFTING AT A PIER WHERE THE CONTRACTOR SHALL BE REQUIRED TO LIFT OFF THE FOOTING AND/OR GROUND LEVEL.

JACKING LOADS:

D.L. = 75 MT
L.L. = 50 MT
TOTAL = 125 MT

LEGEND:

ITEM 582.05M - REMOVAL OF STRUCTURAL CONCRETE- REPLACE WITH CLASS A CONCRETE. (CM)

ITEM 582.07M - REMOVAL OF STRUCTURAL CONCRETE - REPLACE WITH VERTICAL OVERHEAD PATCH MATERIAL. (SM)

ITEM 580.01 M - REMOVAL OF STRUCTURAL CONCRETE. (CM) AND ITEM 555.0105 M - CONCRETE FOR STRUCTURES CLASS A. (CM)

ALL DIMENSIONS ARE IN mm UNLESS OTHERWISE NOTED

AS BUILT REVISIONS

SIGNATURE DATE

INTERSTATE 481 NB
OVER
CSX RAILROAD YARD
PIER 11

STATE OF NEW YORK
DEPARTMENT OF TRANSPORTATION

FILENAME	REGION	DATE	DRAWING NO.
305613AE_P11	3	10/02	PR17-11N

DESIGN SUPERVISOR ____ JOB MANAGER ____ DESIGNED BY ____ ESTIMATED BY ____ DRAFTED BY ____ CHECKED BY ____ CHECKED BY

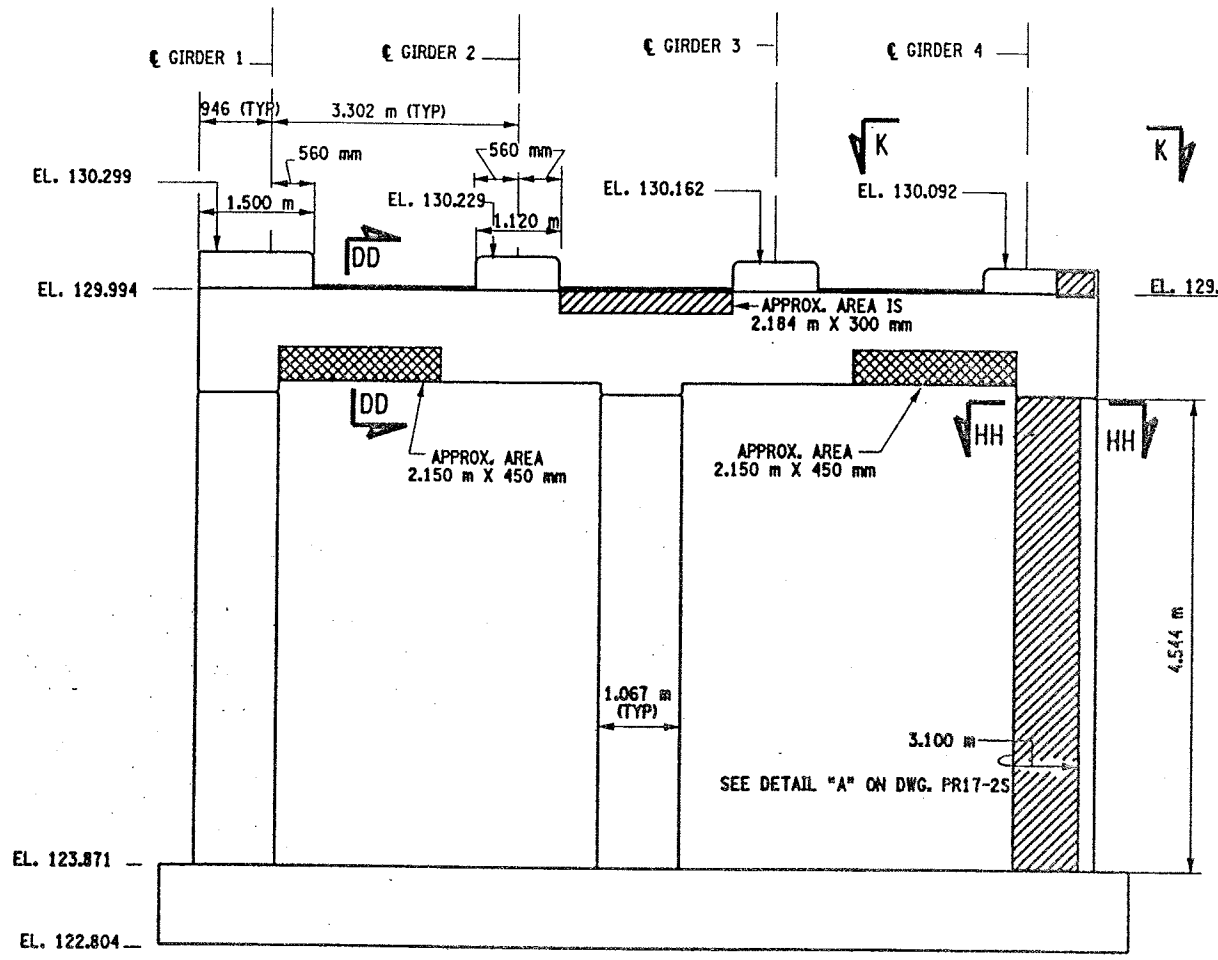

PIER 12 - FRONT FACE (LOOKING NORTH)

BIN 1093572

SCALE: 1 TO 50

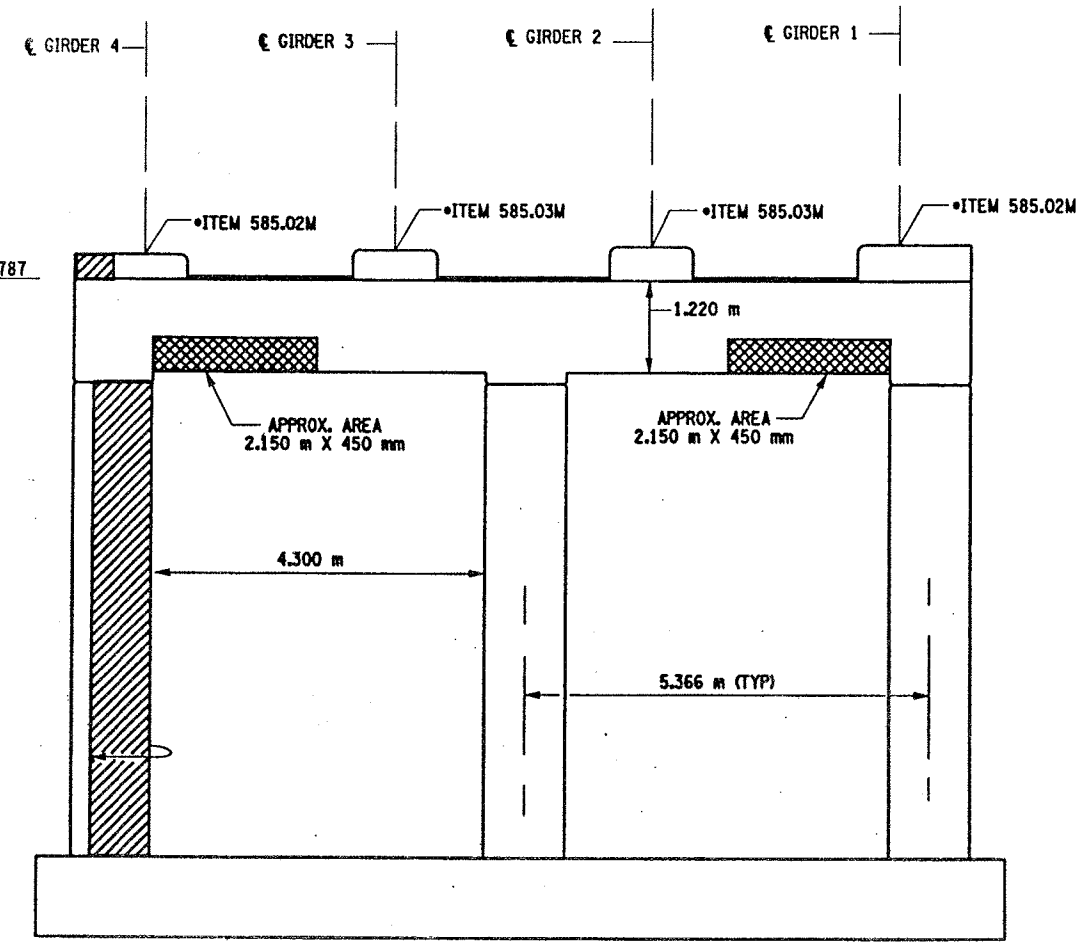

PIER 12 - BACK FACE (LOOKING SOUTH)

BIN 1093572

SCALE: 1 TO 50

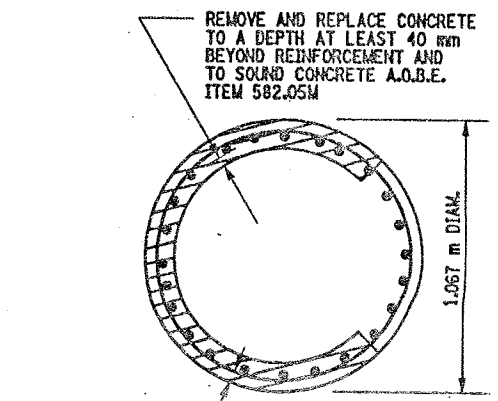

SECTION HH-HH

NOT TO SCALE

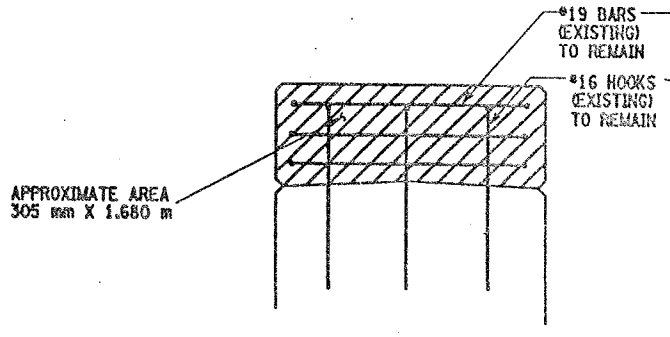

SECTION N-N

NOT TO SCALE

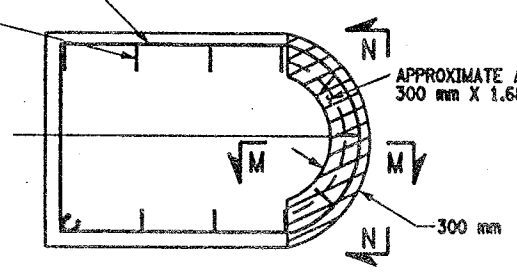

SECTION K-K

NOT TO SCALE

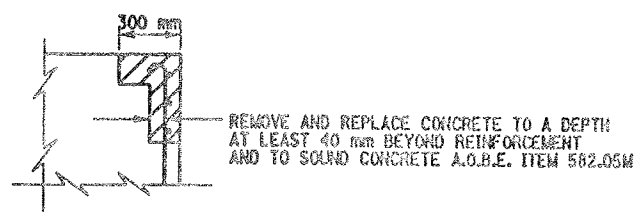

SECTION M-M

NOT TO SCALE

LIST OF ITEMS USED:

ITEM 15565.4302M - BRIDGE BEARING RESTORATION (EA)
ITEM 582.05M - REM. OF STRUC. CONC. - REPLACE WITH CLASS A CONCRETE (CM)
ITEM 582.07M - REM. OF STRUC. CONC. - REPL. W/ VERT. OVERHEAD PATCH MAT'L (SM)
ITEM 585.02M - STRUCTURAL LIFTING OPERATIONS - TYPE B (EA)
ITEM 585.03M - STRUCTURAL LIFTING OPERATION - TYPE C (EA)

FED ROAD REG. NO.	STATE	CONTRACT NO.	SHEET NO.	TOTAL SHEETS
1	N.Y.	D259214	327	432

BRIDGE REHABILITATION PROJECT (ELEMENT SPECIFIC)
VARIOUS BRIDGES ON INTERSTATE 481
TOWNS OF DEWITT AND CICERO
ONONDAGA COUNTY
P.I.N. 305613 B.I.N. 1093572

NOTES:

1. ALL REINFORCEMENT TO REMAIN.
2. RESTORE TO ORIGINAL DIMENSIONS.
3. PEDESTALS NUMERICALLY NUMBERED FROM WEST TO EAST.
4. FOR THE CONCRETE REPAIR AREAS, THE CONCRETE SHALL BE REMOVED TO AT LEAST 40mm MIN. BEYOND THE ENCOUNTERED REINFORCEMENT AND TO SOUND CONCRETE, A.O.B.E.
5. ELEVATIONS SHOWN ARE FROM ORIGINAL CONTRACT PLANS F.I.S.H. 70-7 AND ARE FOR REFERENCE ONLY.
6. REMOVAL DIMENSIONS SHOWN ON PLANS ARE ESTIMATED AND SHALL BE FIELD VERIFIED BY THE CONTRACTOR PRIOR TO BEGINNING OF REMOVAL OPERATIONS A.O.B.E.
7. PERFORM BEARING RESTORATION TO ALL EXPANSION BEARINGS (TO INCLUDE RESETTING OF UNDEREXTENDED OR OVEREXTENDED BEARINGS). SEE DWG. PR17-1S FOR BEARING RESTORATION NOTES. SEE DWG. BR-10 & BR-11 FOR BEARING RESTORATION DETAILS.
8. SEE DWG PR17-10N FOR SECTION DD-DD.
9. ALL CONCRETE REMOVAL SHALL BE SAWCUT TO PRODUCE NEAT REMOVAL LINES. COST TO BE INCLUDED IN THE PRICE BID FOR ITEM 582.05M AND 582.07M.
10. FOR JACKING NOTES SEE DWG PR17-1S.

• PERFORM STRUCTURAL LIFTING UNDER ITEM 585.02M - STRUCTURAL LIFTING OPERATIONS - TYPE B (LIFTING AT A PIER) OR ITEM 585.03M - STRUCTURAL LIFTING OPERATIONS - TYPE C (LIFTING AT A PIER WHERE THE CONTRACTOR SHALL BE REQUIRED TO LIFT OFF THE FOOTING AND/OR GROUND LEVEL.

JACKING LOADS:

D.L. = 75 MT
L.L. = 50 MT
TOTAL = 125 MT

LEGEND:

ITEM 582.05M - REMOVAL OF STRUCTURAL CONCRETE- REPLACE WITH CLASS A CONCRETE. (CM)

ITEM 582.07M - REMOVAL OF STRUCTURAL CONCRETE - REPLACE WITH VERTICAL OVER-HEAD PATCH MATERIAL. (SM)

ALL DIMENSIONS ARE IN mm UNLESS OTHERWISE NOTED

AS BUILT REVISIONS

SIGNATURE DATE

INTERSTATE 481 NB
OVER
CSX RAILROAD YARD
PIER 12

STATE OF NEW YORK
DEPARTMENT OF TRANSPORTATION

FILENAME	REGION	DATE	DRAWING NO.
305613AE.P12	3	10/02	PR17-12N

DESIGN SUPERVISOR ____ JOB MANAGER ____ DESIGNED BY ____ DRAFTED BY ____ ESTIMATED BY ____ CHECKED BY ____ CHECKED BY

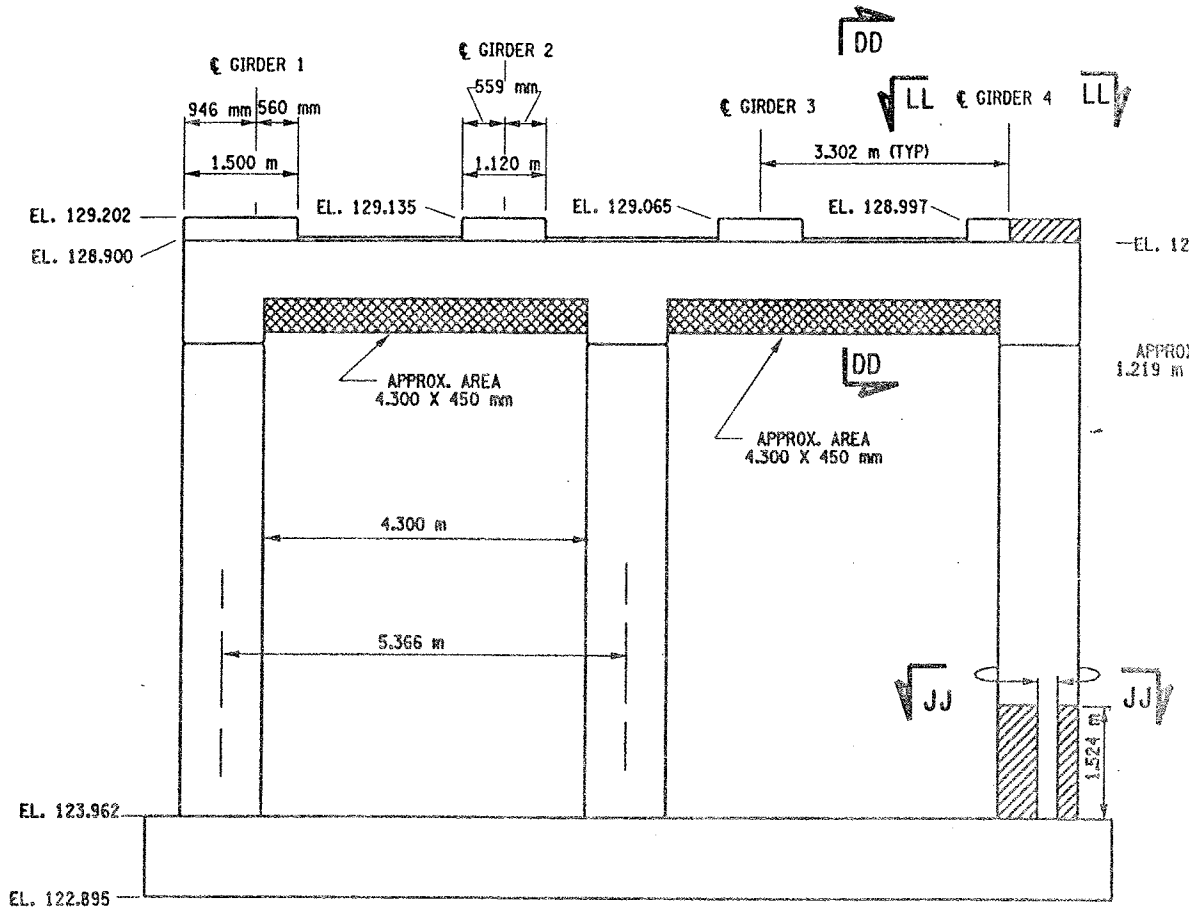

PIER 13 - FRONT FACE (LOOKING NORTH)
BIN 1093572
SCALE: 1 TO 50

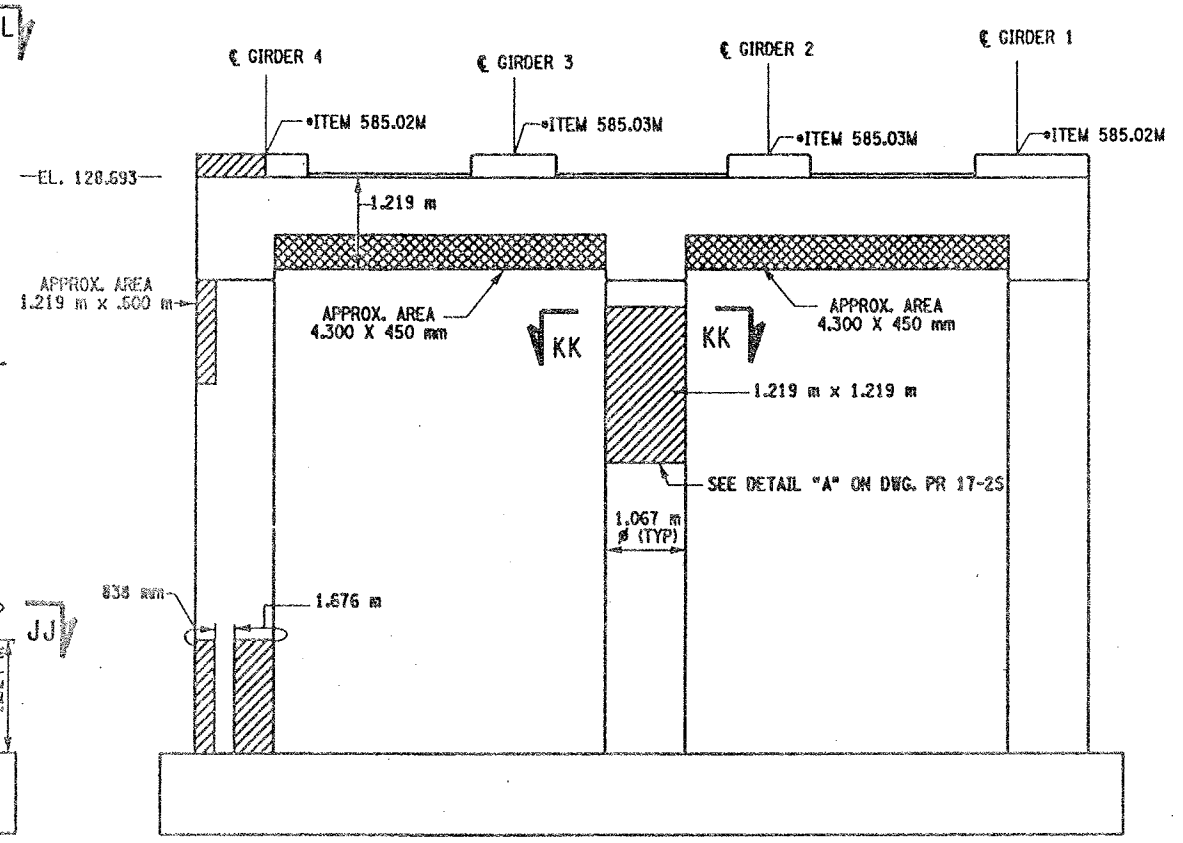

PIER 13- BACK FACE (LOOKING SOUTH)
BIN 1093572
SCALE: 1 TO 50

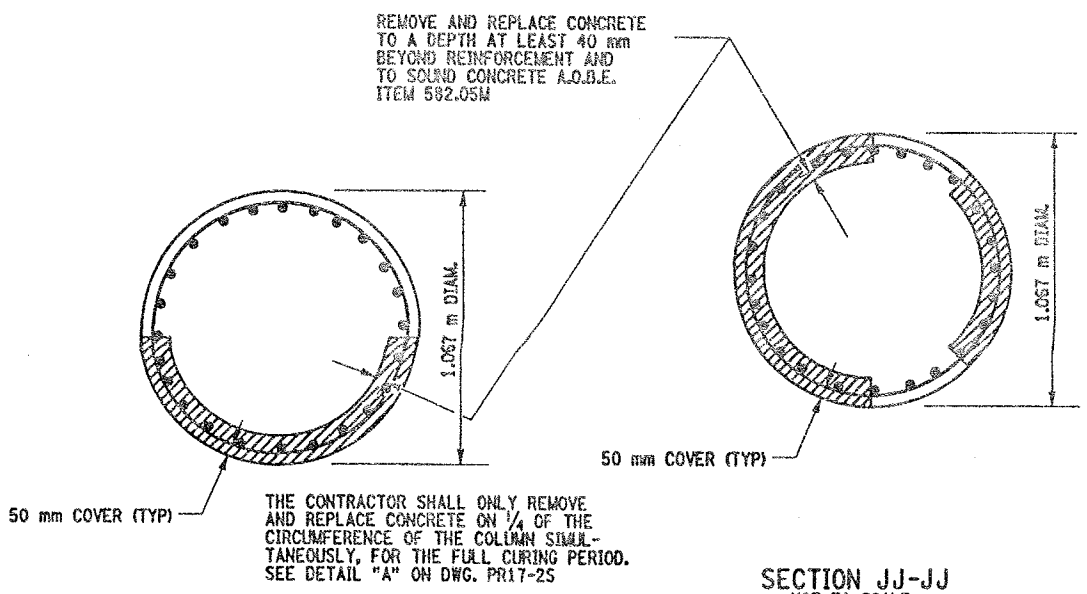

SECTION KK-KK

NOT TO SCALE

SECTION JJ-JJ
NOT TO SCALE

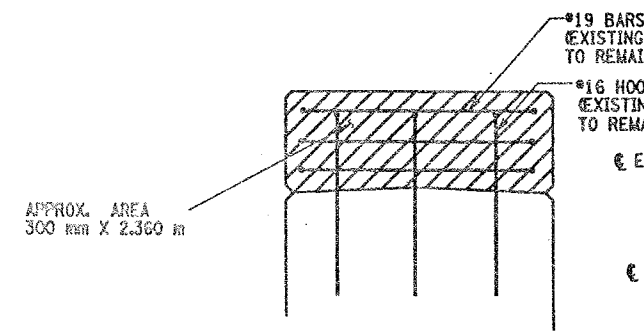

SECTION N-N
NOT TO SCALE

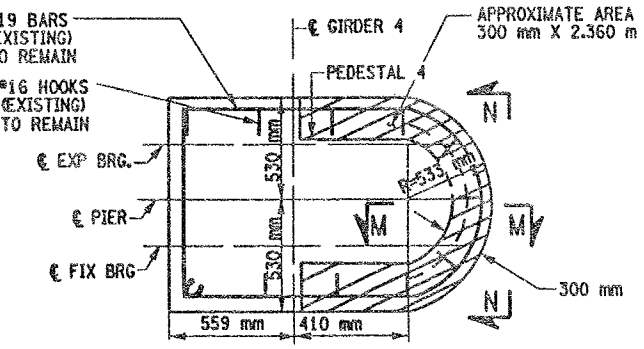

SECTION LL- LL
NOT TO SCALE

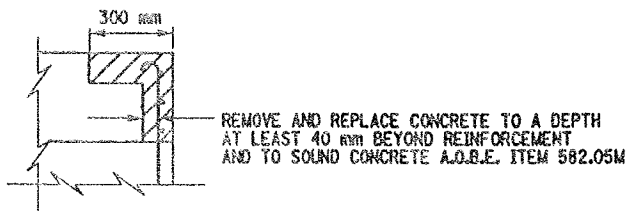

SECTION M-M
NOT TO SCALE

LIST OF ITEMS USED:

ITEM 15565.4302M - BRIDGE BEARING RESTORATION (EA)
ITEM 582.05M - REM. OF STRUC. CONC. - REPLACE WITH CLASS A CONCRETE (CM)
ITEM 582.07M - REM. OF STRUC. CONC. - REPL. W/ VERT. OVERHEAD PATCH MAT'L (SM)
ITEM 585.02M - STRUCTURAL LIFTING OPERATIONS - TYPE B (EA)
ITEM 585.03M - STRUCTURAL LIFTING OPERATION - TYPE C (EA)

FED ROAD REG. NO.	STATE	CONTRACT NO.	SHEET NO.	TOTAL SHEETS
1	N.Y.	D259214	328	432

BRIDGE REHABILITATION PROJECT (ELEMENT SPECIFIC)
VARIOUS BRIDGES ON INTERSTATE 481
TOWNS OF DEWITT AND CICERO
ONONDAGA COUNTY
P.I.N. 305613 B.I.N. 1093572

NOTES:

1. ALL REINFORCEMENT TO REMAIN.
2. RESTORE TO ORIGINAL DIMENSIONS.
3. PEDESTALS NUMERICALLY NUMBERED FROM WEST TO EAST.
4. FOR THE CONCRETE REPAIR AREAS, THE CONCRETE SHALL BE REMOVED TO AT LEAST 40mm MIN. BEYOND THE ENCOUNTERED REINFORCEMENT AND TO SOUND CONCRETE, A.O.B.E.
5. ELEVATIONS SHOWN ARE FROM ORIGINAL CONTRACT PLANS F.I.S.H. 70-7 AND ARE FOR REFERENCE ONLY.
6. REMOVAL DIMENSIONS SHOWN ON PLANS ARE ESTIMATED AND SHALL BE FIELD VERIFIED BY THE CONTRACTOR PRIOR TO BEGINNING OF REMOVAL OPERATIONS A.O.B.E.
7. PERFORM BEARING RESTORATION TO ALL EXPANSION BEARINGS (TO INCLUDE RESETTING OF UNDEREXTENDED OR OVEREXTENDED BEARINGS). SEE DWG. PR17-1S FOR BEARING RESTORATION NOTES. SEE DWG. BR-10 & BR-11 FOR BEARING RESTORATION DETAILS.
8. SEE DWG. PR 17-10N FOR SECTION DD-DD.
9. ALL CONCRETE REMOVAL SHALL BE SAWCUT TO PRODUCE NEAT REMOVAL LINES. COST TO BE INCLUDED IN THE PRICE BID FOR ITEM 582.05M AND 582.07M.
10. FOR JACKING NOTES SEE DWG PR17-1S.

• PERFORM STRUCTURAL LIFTING UNDER ITEM 585.02M - STRUCTURAL LIFTING OPERATIONS - TYPE B (LIFTING AT A PIER) OR ITEM 585.03M - STRUCTURAL LIFTING OPERATIONS - TYPE C (LIFTING AT A PIER WHERE THE CONTRACTOR SHALL BE REQUIRED TO LIFT OFF THE FOOTING AND/OR GROUND LEVEL.

JACKING LOADS:

D.L. = 75 MT
L.L. = 50 MT
TOTAL = 125 MT

LEGEND:

ITEM 582.05M - REMOVAL OF STRUCTURAL CONCRETE- REPLACE WITH CLASS A CONCRETE. (CM)

ITEM 582.07M - REMOVAL OF STRUCTURAL CONCRETE - REPLACE WITH VERTICAL OVER-HEAD PATCH MATERIAL. (SM)

ALL DIMENSIONS ARE IN mm UNLESS OTHERWISE NOTED

AS BUILT REVISIONS

SIGNATURE DATE

INTERSTATE 481 NB
OVER
CSX RAILROAD YARD
PIER 13

STATE OF NEW YORK
DEPARTMENT OF TRANSPORTATION

FILENAME	REGION	DATE	DRAWING NO.
305613AE.P13	3	10/02	PR17-13N

DESIGN SUPERVISOR ____ JOB MANAGER ____ DESIGNED BY ____ CHECKED BY ____ ESTIMATED BY ____ DRAFTED BY ____ CHECKED BY ____

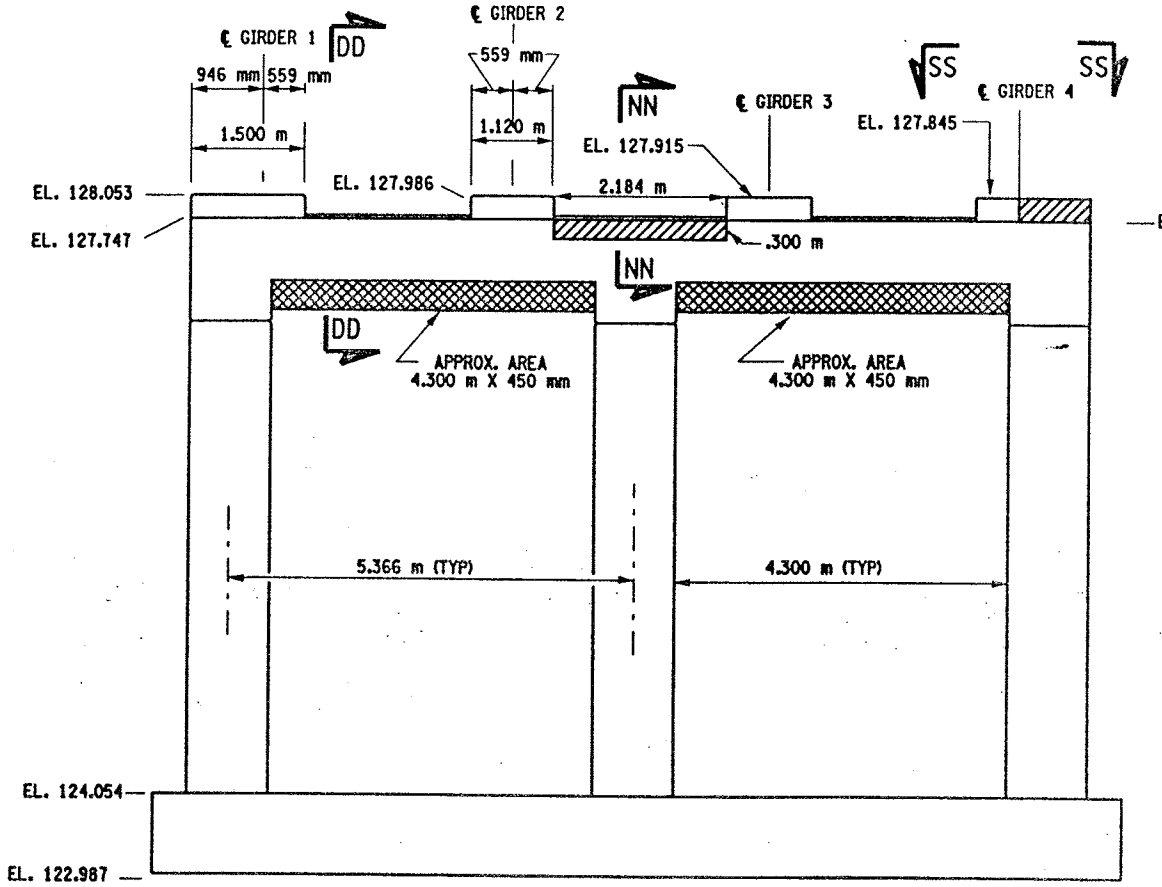

PIER 14 - FRONT FACE (LOOKING NORTH)
BIN 1093572
SCALE: 1 TO 50

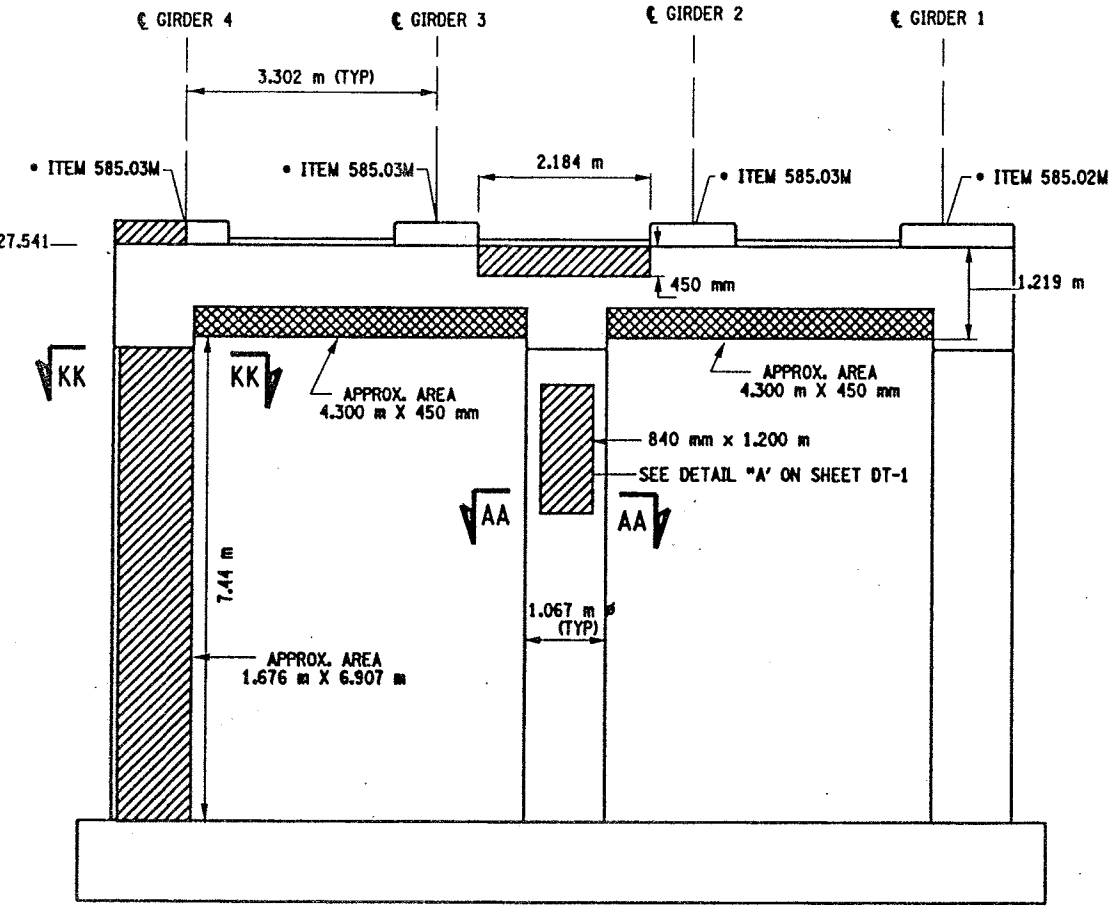

PIER 14 - BACK FACE (LOOKING SOUTH)
BIN 1093572
SCALE: 1 TO 50

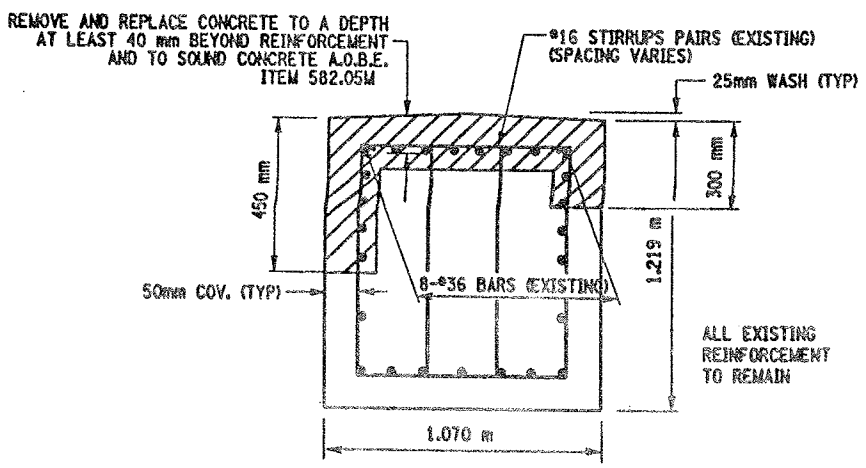

SECTION NN-NN
NOT TO SCALE

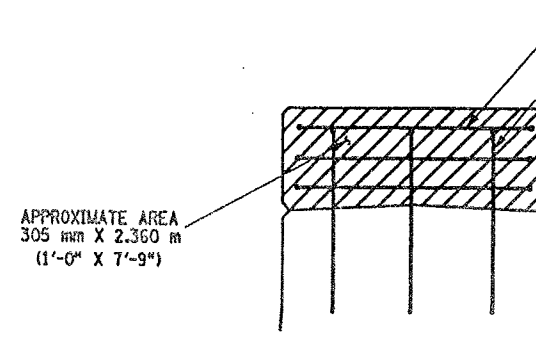

SECTION N-N
NOT TO SCALE

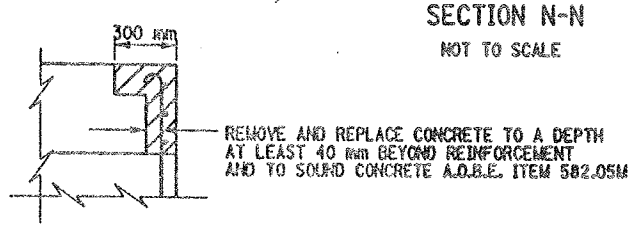

SECTION M-M
NOT TO SCALE

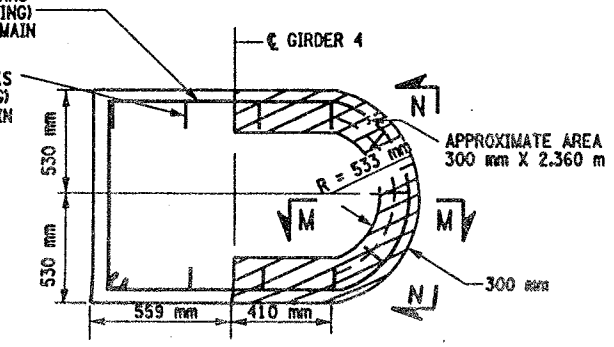

SECTION SS-SS
NOT TO SCALE

LIST OF ITEMS USED:

ITEM 15565.4302M - BRIDGE BEARING RESTORATION (EA)
ITEM 582.05M - REM. OF STRUC. CONC. - REPLACE WITH CLASS A CONCRETE (CM)
ITEM 582.07M - REM. OF STRUC. CONC. - REPL. W/ VERT. OVERHEAD PATCH MAT'L (SM)
ITEM 585.02M - STRUCTURAL LIFTING OPERATIONS - TYPE B (EA)
ITEM 585.03M - STRUCTURAL LIFTING OPERATION - TYPE C (EA)

FED ROAD REG. NO.	STATE	CONTRACT NO.	SHEET NO.	TOTAL SHEETS
1	N.Y.	D259214	329	432

BRIDGE REHABILITATION PROJECT (ELEMENT SPECIFIC)
VARIOUS BRIDGES ON INTERSTATE 481
TOWNS OF DEWITT AND CICERO
ONONDAGA COUNTY
P.I.N. 305613 B.I.N. 1093572

NOTES:

1. ALL REINFORCEMENT TO REMAIN.
2. RESTORE TO ORIGINAL DIMENSIONS.
3. PEDESTALS NUMERICALLY NUMBERED FROM WEST TO EAST.
4. FOR THE CONCRETE REPAIR AREAS, THE CONCRETE SHALL BE REMOVED TO AT LEAST 40mm MIN. BEYOND THE ENCOUNTERED REINFORCEMENT AND TO SOUND CONCRETE, A.O.B.E.
5. ELEVATIONS SHOWN ARE FROM ORIGINAL CONTRACT PLANS F.I.S.H. 70-7 AND ARE FOR REFERENCE ONLY.
6. REMOVAL DIMENSIONS SHOWN ON PLANS ARE ESTIMATED AND SHALL BE FIELD VERIFIED BY THE CONTRACTOR PRIOR TO BEGINNING OF REMOVAL OPERATIONS A.O.B.E.
7. PERFORM BEARING RESTORATION TO ALL EXPANSION BEARINGS (TO INCLUDE RESETTING OF UNDEREXTENDED OR OVEREXTENDED BEARINGS). SEE DWG. PR17-1S FOR BEARING RESTORATION NOTES. SEE DWG. BR-10 & BR-11 FOR BEARING RESTORATION DETAILS.
8. SEE DWG. PR17-10N FOR SECTION DD-DD.
9. SEE DWG. PR17-7N FOR SECTION AA-AA.
10. SEE DWG. PR17-13N FOR SECTION KK-KK.
11. ALL CONCRETE REMOVAL SHALL BE SAWCUT TO PRODUCE NEAT REMOVAL LINES. COST TO BE INCLUDED IN THE PRICE BID FOR ITEM 582.05M AND ITEM 582.07M.
12. FOR JACKING NOTES SEE DWG PR17-1S.

• PERFORM STRUCTURAL LIFTING UNDER ITEM 585.02M - STRUCTURAL LIFTING OPERATIONS - TYPE B (LIFTING AT A PIER) OR ITEM 585.03M - STRUCTURAL LIFTING OPERATIONS - TYPE C (LIFTING AT A PIER WHERE THE CONTRACTOR SHALL BE REQUIRED TO LIFT OFF THE FOOTING AND/OR GROUND LEVEL.

JACKING LOADS:

D.L. = 75 MT
L.L. = 50 MT
TOTAL = 125 MT

LEGEND:

ITEM 582.05M - REMOVAL OF STRUCTURAL CONCRETE- REPLACE WITH CLASS A CONCRETE. (CM)

ITEM 582.07M - REMOVAL OF STRUCTURAL CONCRETE - REPLACE WITH VERTICAL OVERHEAD PATCH MATERIAL. (SM)

ALL DIMENSIONS ARE IN mm UNLESS OTHERWISE NOTED

AS BUILT REVISIONS

SIGNATURE DATE

INTERSTATE 481 NB
OVER
CSX RAILROAD YARD
PIER 14

STATE OF NEW YORK
DEPARTMENT OF TRANSPORTATION

FILENAME	REGION	DATE	DRAWING NO.
305613AE_P14	3	10/02	PR17-14N

DESIGN SUPERVISOR ____ JOB MANAGER ____ DESIGNED BY ____ ESTIMATED BY ____ DRAFTED BY ____ CHECKED BY ____ CHECKED BY

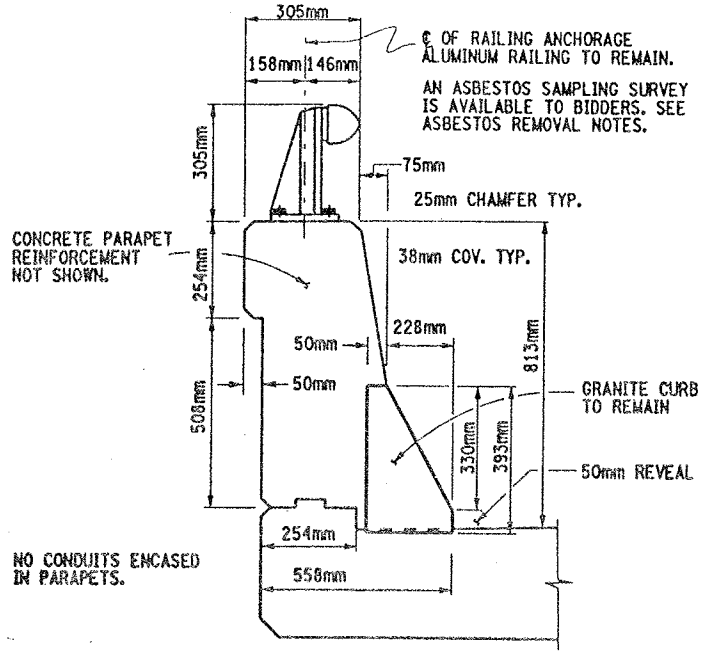

TYPICAL SECTION THRU SUPERSTRUCTURE
PARAPET CONCRETE DETAILS

NOT TO SCALE

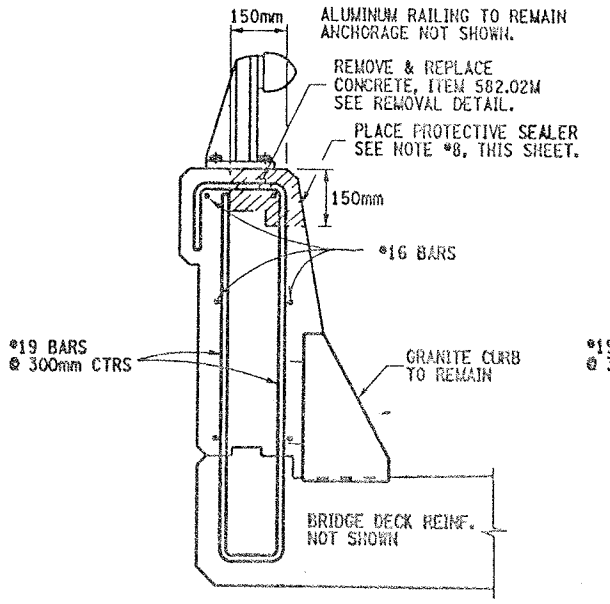

(I) REPAIR DETAILS
150mmX150mm TOP

NOT TO SCALE

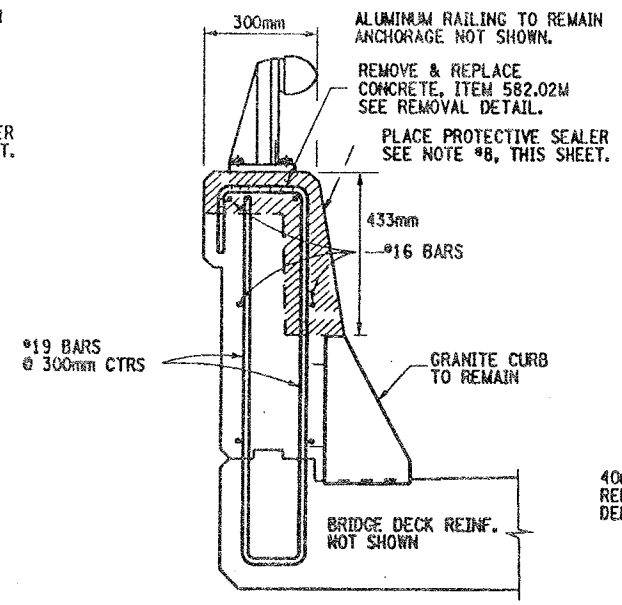

(II) REPAIR DETAILS
FULL TOP & FRONT FACE

NOT TO SCALE

CONCRETE REMOVAL NOTES:

REMOVE ALL DETERIORATED CONCRETE TO SOUND CONCRETE AND AT LEAST 40mm BEYOND ENCOUNTERED REINFORCEMENT BARS, AOBE. PAYMENT TO BE PAID UNDER ITEM 582.05M.

CONCRETE REMOVAL, SAWCUT 6mm DEPTH MINIMUM TO PRODUCE NEAT REMOVAL LINES, ALL COSTS SHALL BE INCLUDED IN PRICE BID FOR ITEM 582.05M.

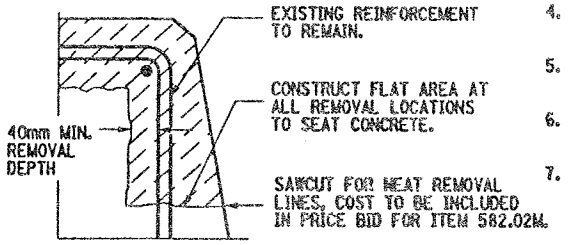

TYPICAL REMOVAL DETAIL

NOT TO SCALE

FED ROAD REG. NO.	STATE	CONTRACT NO.	SHEET NO.	TOTAL SHEETS
1	N.Y.	D259214	330	432

BRIDGE REHABILITATION PROJECT (ELEMENT SPECIFIC)
VARIOUS BRIDGES ON INTERSTATE 481
TOWNS OF DEWITT AND CICERO
ONONDAGA COUNTY
P.I.N. 305613 B.I.N. 1093571 & 1093572

CONCRETE PARAPET REPAIR NOTES:

1. ALUMINUM RAILING TO REMAIN, ANCHORAGE NOT SHOWN.
2. EXISTING PARAPET REINFORCEMENT TO REMAIN.
3. GRANITE CURB TO REMAIN, ANCHOR BARS NOT SHOWN.
4. REMOVAL OF CONCRETE TO LIMITS SHOWN, AOBE. SEE TYPICAL REMOVAL DETAIL, THIS SHEET.
5. ALL DIMENSIONS SHOWN FOR CONCRETE REMOVAL ARE APPROXIMATE AND SHALL BE FIELD VERIFIED.
6. CONTRACTOR SHALL RESTORE CONCRETE PARAPET TO ORIGINAL DIMENSIONS.
7. IT IS DESIRABLE TO RETAIN ALL EXISTING GRANITE CURB, BUT AT SOME LOCATIONS ADJACENT TO THE JOINT BLOCK-OUTS IT MAY BE NECESSARY TO REPLACE OR REPAIR THE SECTION OF CURB, TO THE SATISFACTION OF THE ENGINEER. COST TO BE INCLUDE IN PRICE BID FOR ITEM 582.05M.
8. AFTER PARAPET REPAIRS ARE COMPLETED AND SUFFICIENT CURE TIME AS DECIDED BY ENGINEER, APPLY A COATING TYPE PROTECTIVE SEALERS WHICH MEETS MATERIAL SPECIFICATION 717-04. THIS PROTECTIVE SEALER SHALL BE APPLIED TO THE FRONT FACE AND TOP OF ALL PARAPETS (REPAIRED AREAS & ORIGINAL AREAS) TO ENSURE A UNIFORMED APPEARANCE. COST OF THIS SEALER TO BE INCLUDED IN PRICE BID FOR ITEM 18559.1696 M.

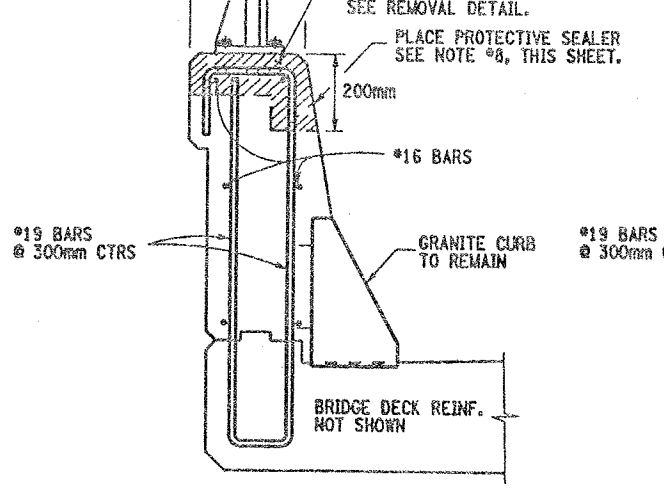

(III) REPAIR DETAILS
FULL TOP & 200mm FACE

NOT TO SCALE

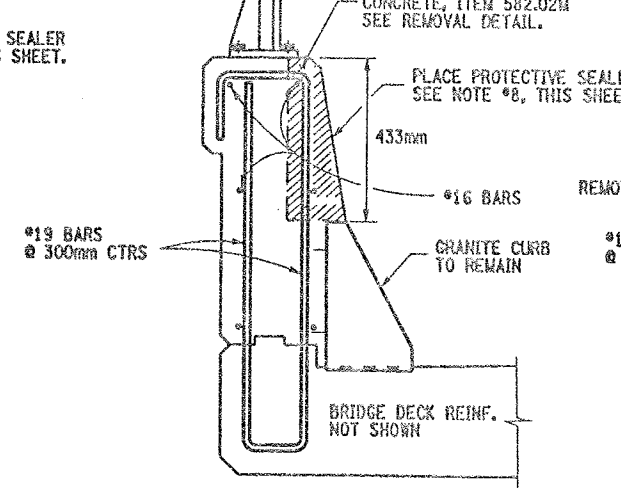

(IV) REPAIR DETAILS
FRONT FACE

NOT TO SCALE

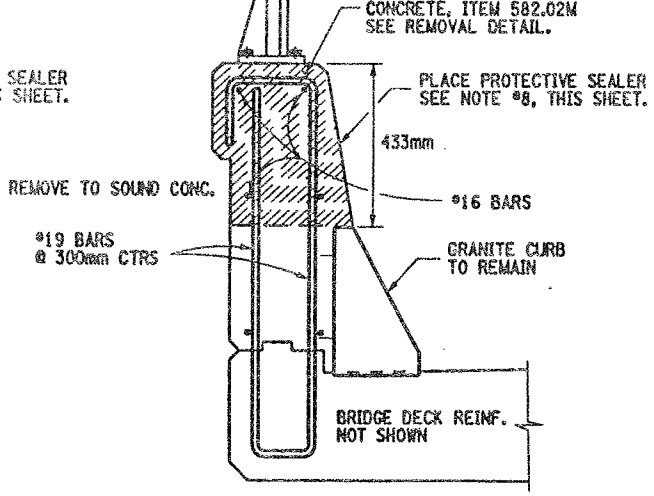

(V) REPAIR DETAILS
FULL SECTION

NOT TO SCALE

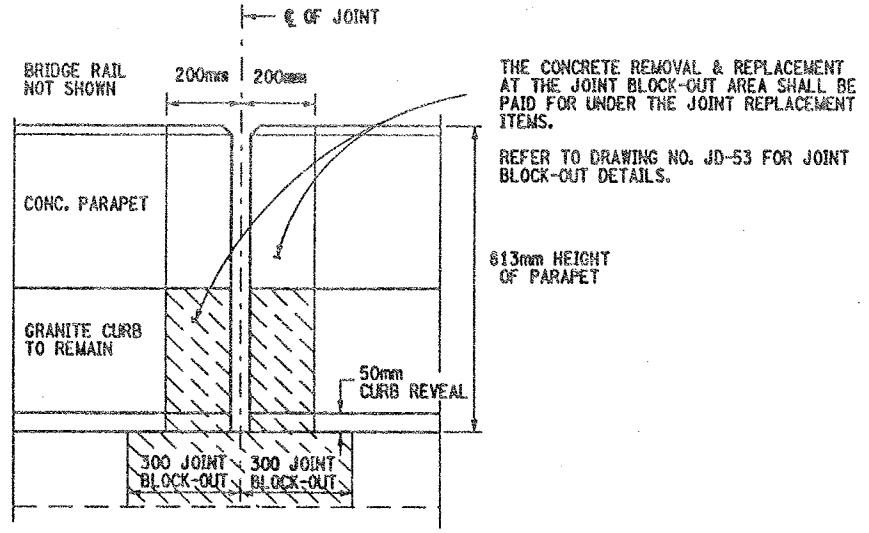

FRONT FACE PARAPET CONCRETE DETAIL
SHOWS TYPICAL CONC. REMOVAL AT JOINT

NOT TO SCALE

ASBESTOS MATERIAL REMOVAL NOTES:

THE REMOVAL OF ALL ASBESTOS CONTAINING CAULK (ITEM 210.5433M) SHALL BE COMPLETED PRIOR TO COMMENCEMENT OF ANY PARAPET REPAIR WORK.

THIS REMOVAL OF THE ASBESTOS CAULK SHALL BE PERFORMED AT EACH BRIDGE RAIL BASE PLATE ON BOTH N.B. & S.B. BRIDGES. (REMOVE ASBESTOS CALKING AT ALL RAIL BASE PLATES BOTH BRIDGES)

AFTER COMPLETION OF THE PARAPET REPAIRS INSTALL A CAULKING COMPOUND AROUND THE BASE PLATES OF THE RAILING WHICH MEETS MATERIAL SPECIF. 705-06 AND IS ACCEPTABLE TO THE ENGINEER. PAID UNDER ITEM 210.5433M.

REFER TO ORIGINAL CONTRACT PLANS F.I.S.H. 70-7 FOR RAIL LAY-OUT DETAILS.

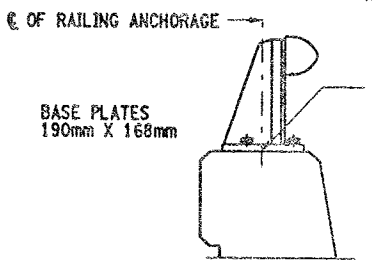

REMOVE EXISTING GRAY ASBESTOS CAULKING COMPOUND AT THE ALUMINUM RAILING BASE PLATES, IT IS ASSUMED THAT THE CAULK COMPOUND IS SURROUNDING (PERIMETER) THE RAILING BASE PLATES. THIS PERIMETER REMOVAL OPERATION SHALL BE PERFORM AT EACH RAILING BASE PLATE ON BOTH STRUCTURES.

HOWEVER, SOME CAULK MATERIAL MAY BE FOUND UNDER THE RAILING BASE PLATES. THIS CAULKING COMPOUND UNDER THE BASE PLATES SHALL BE REMOVED ONLY AT LOCATIONS WHERE THE PARAPET CONCRETE REPAIRS WILL DISTRUB THE MATERIAL (REMOVAL AS ENCOUNTERED).

ALL COSTS TO BE PAID UNDER ITEM 210.5433M. SEE ASBESTOS MATERIAL REMOVAL NOTES, THIS SHEET.

TYPICAL BRIDGE RAIL DETAIL

NOT TO SCALE

ITEMS USED:

ITEM 582.05M - REMOVAL OF STRUCTURAL CONCRETE REPLACE WITH CLASS "A" CONCRETE (CM)

ITEM 210.5433M - REMOVAL & DISPOSAL OF ASBESTOS CONTAINING CAULK (BV 12) (LS)

ITEM 18559.1696M - PROTECTIVE SEALING OF STRUCTURAL CONCRETE (SM)

ALL DIMENSIONS ARE IN mm UNLESS OTHERWISE NOTED

AS BUILT REVISIONS

SIGNATURE DATE

INTERSTATE 481 OVER CSX RR YARD

PARAPET REPAIR DETAILS

STATE OF NEW YORK
DEPARTMENT OF TRANSPORTATION

FILENAME	REGION	DATE	DRAWING NO.
305613AB.R1A	3	10/02	PW17-1

ESTIMATED BY ____ DRAFTED BY ____ CHECKED BY ____
DESIGN SUPERVISOR ____ JOB MANAGER ____ DESIGNED BY ____

FED ROAD REG. NO.	STATE	CONTRACT NO.	SHEET NO.	TOTAL SHEETS
1	N.Y.	D259214	332	432

BRIDGE REHABILITATION PROJECT (ELEMENT SPECIFIC)
VARIOUS BRIDGES ON INTERSTATE 481
TOWNS OF DEWITT AND CICERO
ONONDAGA COUNTY
P.I.N. 305613 B.I.N. 1093572

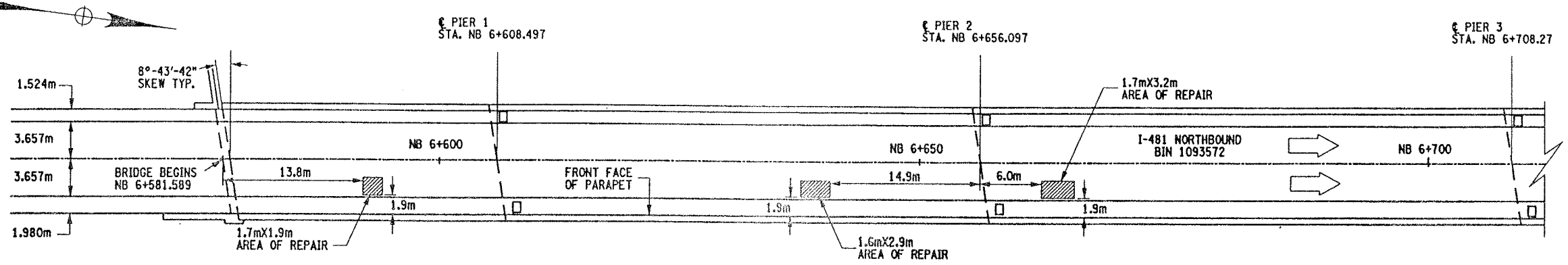

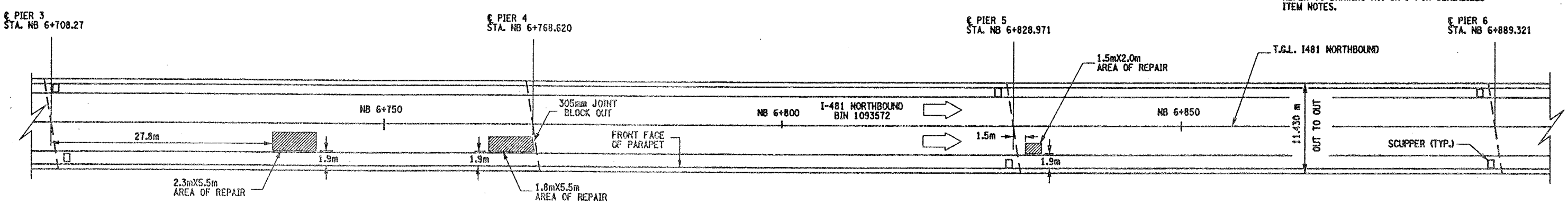

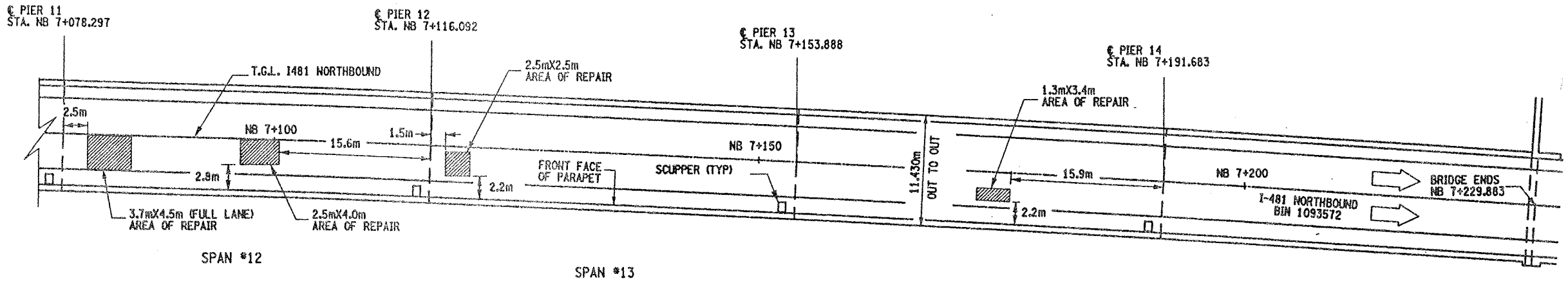

PLAN VIEW OF SPOT DECK REPAIRS

NOT TO SCALE

GENERAL NOTES:

THIS WORK ONLY PERTAINS TO BIN 1093572 NB.

THE AREAS SHOWN ARE THE RESULTS OF FIELD INVESTIGATIONS AND ARE ONLY APPROXIMATE. THE ACTUAL LIMITS SHALL BE AS DIRECTED BY ENGINEER.

NO FULL DEPTH SLAB REPAIRS ARE EXPECTED AT THESE LOCATIONS.

REFER TO DRAWING NO. GN-1 FOR SERIALIZED ITEM NOTES.

REMOVAL NOTES:

ORIGINAL BRIDGE DECK 203mm MONOLITHIC SLAB. A 38mm CONC. OVERLAY HAS BEEN ADDED.

THESE LOCATIONS ARE CURRENTLY FILLED WITH ASPHALT (BLACKTOP). DEPTH OF ASPHALT IS UNKNOWN, ESTIMATED AT @ 38mm. THE REMOVAL OF THE ASPHALT AND CONCRETE TO LIMITS SHOWN TO BE PAID UNDER ITEM 579.02M.

REMOVE CONCRETE TO LIMITS SHOWN AND TO SOUND CONCRETE, AS ORDER BY ENGINEER.

ALL AREAS THAT ARE REPAIRED SHALL ALSO RECEIVE ITEM 558.01 - TRANSVERSE SAWCUT GROOVING AND ITEM 18559.1896M - PROTECTIVE SEALING.

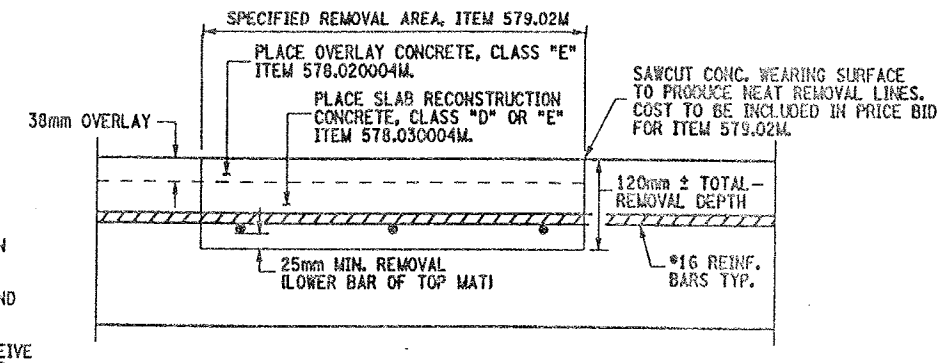

CROSS SECTION VIEW THROUGH REPAIR LOCATION

NOT TO SCALE

ITEMS USED:

ITEM 558.01M - TRANSVERSE SAWCUT GROOVING (SM)
ITEM 18559.1896M - PROTECTIVE SEALING FOR STRUCT. CONC. (SM)
ITEM 578.020004M - OVERLAY CONCRETE, CLASS "E" (SM)
ITEM 578.030004M - SLAB RECONSTRUCTION CONCRETE, CLASS "D" OR "E" (SM)
ITEM 579.02M - REINFORCING BAR EXPOSURE (SM)

ALL DIMENSIONS ARE IN m UNLESS OTHERWISE NOTED

AS BUILT REVISIONS

SIGNATURE DATE

INTERSTATE 481
OVER
CSX RAILROAD YARD
BRIDGE DECK REPAIRS

STATE OF NEW YORK
DEPARTMENT OF TRANSPORTATION

FILENAME	REGION	DATE	DRAWING NO.
305613AB.R1A	3	10/02	DR17-1

DESIGN SUPERVISOR — JOB MANAGER — ESTIMATED BY — DESIGNED BY — DRAFTED BY — CHECKED BY

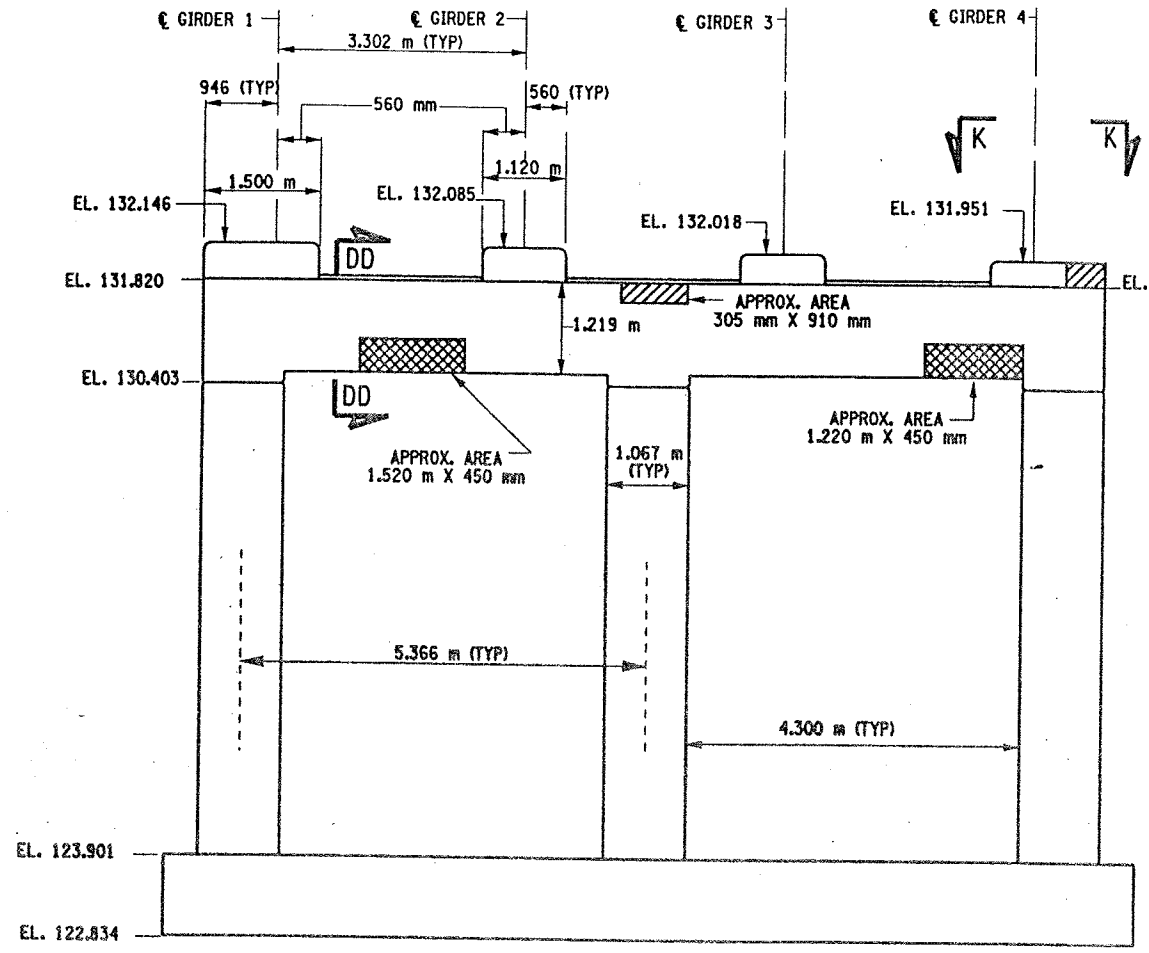

PIER 10 - FRONT FACE (LOOKING NORTH)
BIN 1093572
SCALE: 1 TO 50

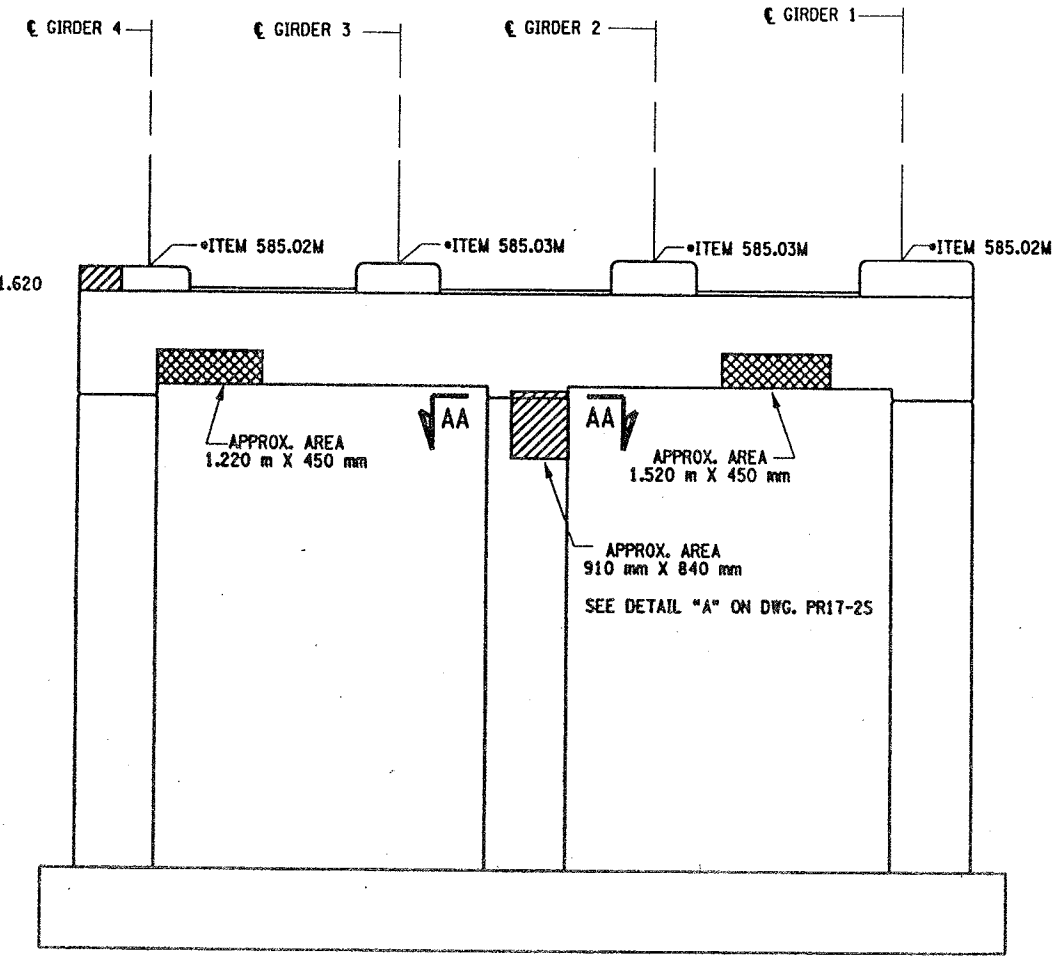

PIER 10 - BACK FACE (LOOKING SOUTH)
BIN 1093572
SCALE: 1 TO 50

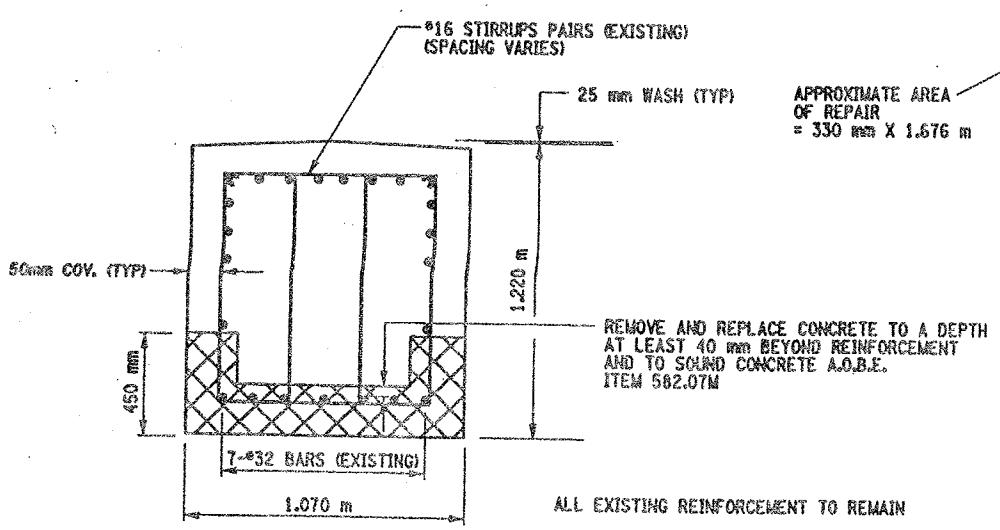

SECTION DD-DD
NOT TO SCALE

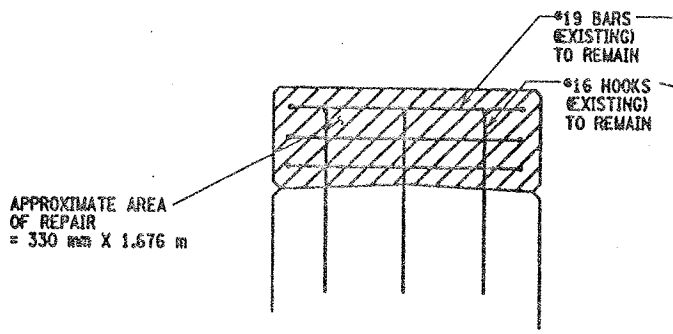

SECTION N-N
NOT TO SCALE

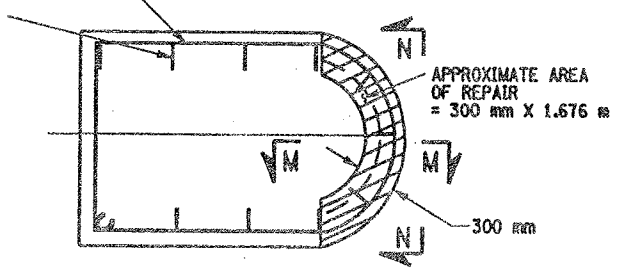

SECTION K-K
NOT TO SCALE

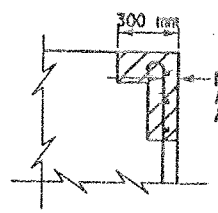

SECTION M-M
NOT TO SCALE

LIST OF ITEMS USED:

ITEM 15565.4302M - BRIDGE BEARING RESTORATION (EA)
ITEM 582.05M - REM. OF STRUC. CONC. - REPLACE WITH CLASS A CONCRETE (CM)
ITEM 582.07M - REM. OF STRUC. CONC. - REPL. W/ VERT. OVERHEAD PATCH MATL. (SM)
ITEM 585.02M - STRUCTURAL LIFTING OPERATIONS - TYPE B (EA)
ITEM 585.03M - STRUCTURAL LIFTING OPERATION - TYPE C (EA)

FED ROAD REG. NO.	STATE	CONTRACT NO.	SHEET NO.	TOTAL SHEETS
1	N.Y.	D259214	325	432

BRIDGE REHABILITATION PROJECT (ELEMENT SPECIFIC)
VARIOUS BRIDGES ON INTERSTATE 481
TOWNS OF DEWITT AND CICERO
ONONDAGA COUNTY
P.I.N. 305613 B.I.N. 1093572

NOTES:

1. ALL REINFORCEMENT TO REMAIN.
2. RESTORE TO ORIGINAL DIMENSIONS.
3. PEDESTALS NUMERICALLY NUMBERED FROM WEST TO EAST.
4. FOR THE CONCRETE REPAIR AREAS, THE CONCRETE SHALL BE REMOVED TO AT LEAST 40mm MIN. BEYOND THE ENCOUNTERED REINFORCEMENT AND TO SOUND CONCRETE, A.O.B.E.
5. ELEVATIONS SHOWN ARE FROM ORIGINAL CONTRACT PLANS F.I.S.H. 70-7 AND ARE FOR REFERENCE ONLY.
6. REMOVAL DIMENSIONS SHOWN ON PLANS ARE ESTIMATED AND SHALL BE FIELD VERIFIED BY THE CONTRACTOR PRIOR TO BEGINNING OF REMOVAL OPERATIONS A.O.B.E.
7. PERFORM BEARING RESTORATION TO ALL EXPANSION BEARINGS (TO INCLUDE RESETTING OF UNDEREXTENDED OR OVEREXTENDED BEARINGS). SEE DWG. PR17-1S FOR BEARING RESTORATION NOTES. SEE DWG. BR-10 & BR-11 FOR BEARING RESTORATION DETAILS.
8. FOR SECTION AA-AA SEE DWG. PR17-7N.
9. ALL CONCRETE REMOVAL SHALL BE SAWCUT TO PRODUCE NEAT REMOVAL LINES. COST TO BE INCLUDED IN THE PRICE BID FOR ITEM 582.05M AND ITEM 582.07M.
10. FOR JACKING NOTES SEE DWG PR17-1S.

• PERFORM STRUCTURAL LIFTING UNDER ITEM 585.02M - STRUCTURAL LIFTING OPERATIONS - TYPE B LIFTING AT A PIER) OR ITEM 585.03M - STRUCTURAL LIFTING OPERATIONS - TYPE C LIFTING AT A PIER WHERE THE CONTRACTOR SHALL BE REQUIRED TO LIFT OFF THE FOOTING AND/OR GROUND LEVEL.

JACKING LOADS:

D.L. = 75 MT
L.L. = 50 MT
TOTAL = 125 MT

LEGEND:

ITEM 582.05M - REMOVAL OF STRUCTURAL CONCRETE- REPLACE WITH CLASS A CONCRETE (CM)

ITEM 582.07M - REMOVAL OF STRUCTURAL CONCRETE - REPLACE WITH VERTICAL OVER-HEAD PATCH MATERIAL. (SM)

ALL DIMENSIONS ARE IN mm UNLESS OTHERWISE NOTED

AS BUILT REVISIONS

SIGNATURE DATE

INTERSTATE 481 NB
OVER
CSX RAILROAD YARD
PIER 10

STATE OF NEW YORK
DEPARTMENT OF TRANSPORTATION

FILENAME	REGION	DATE	DRAWING NO.
305613AE.P10	3	10/02	PR17-10N

DESIGNED BY
DRAFTED BY
CHECKED BY
ESTIMATED BY
JOB MANAGER
DESIGN SUPERVISOR

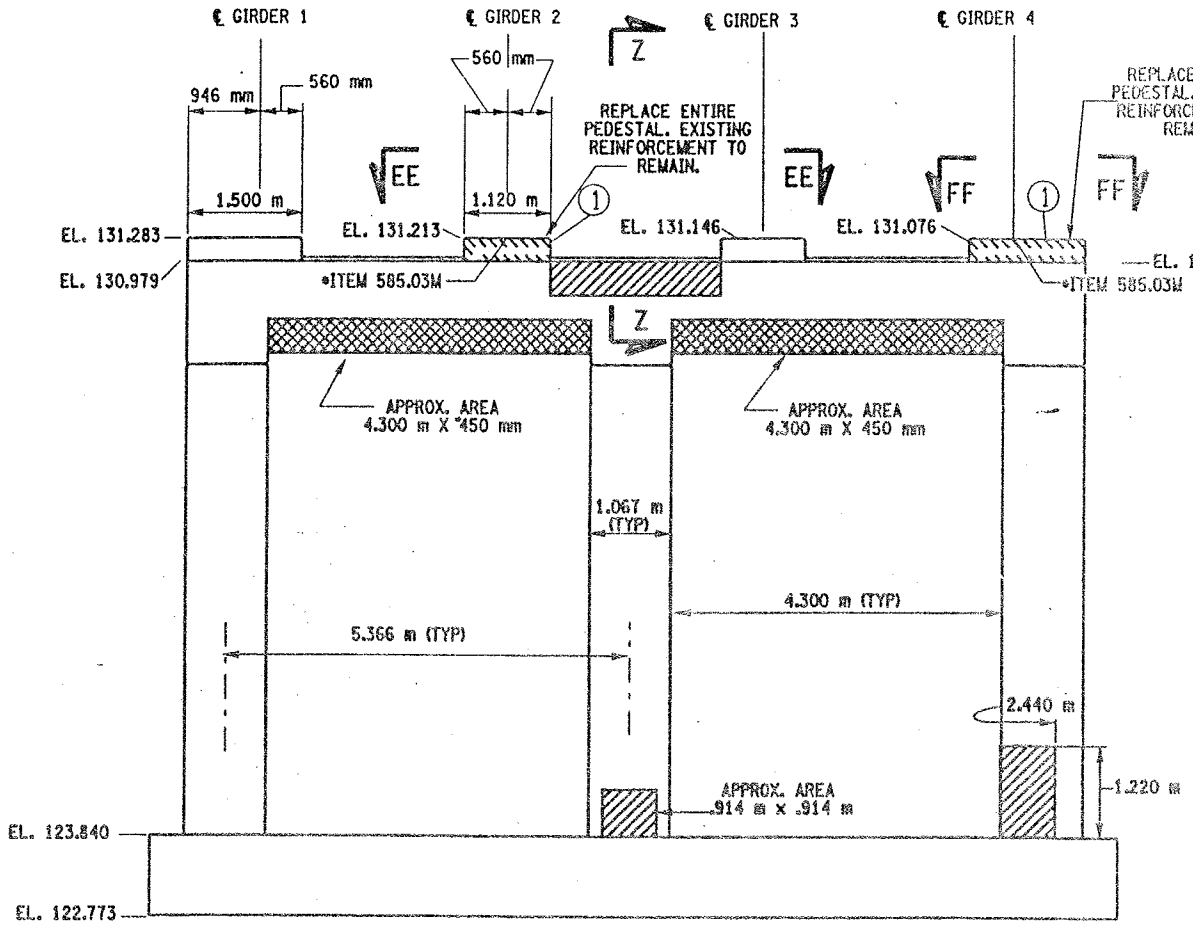

PIER 11 - FRONT FACE (LOOKING NORTH)
BIN 1093572
SCALE: 1 TO 50

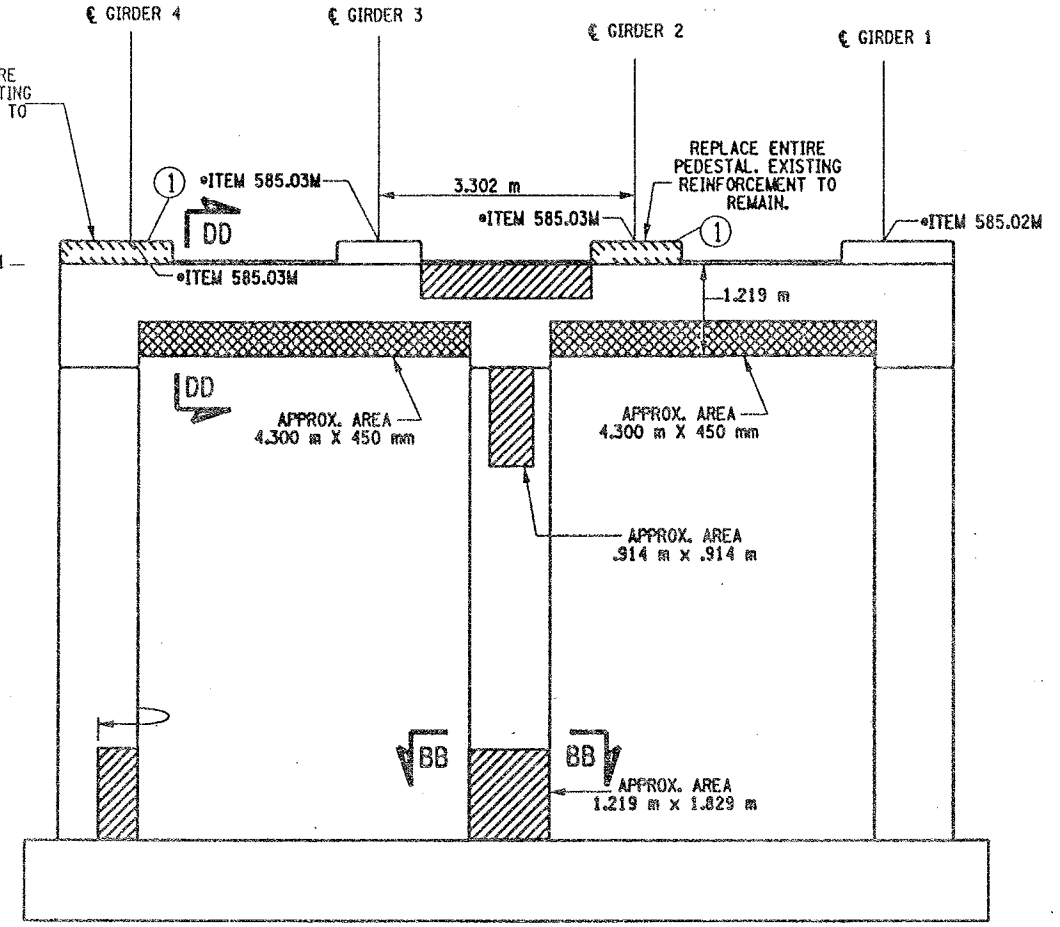

PIER 11- BACK FACE (LOOKING SOUTH)
BIN 1093572
SCALE: 1 TO 50

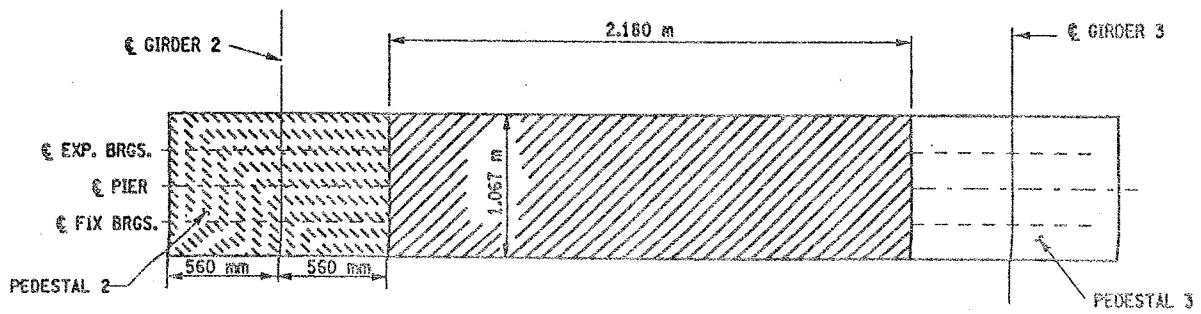

SECTION EE-EE
NOT TO SCALE

CONCRETE TABLE (m³)		
PLACEMENT	QUANTITY	ITEM NO.
1	0.80	555.0105M

(1) INDICATES CONCRETE PLACEMENT NUMBER

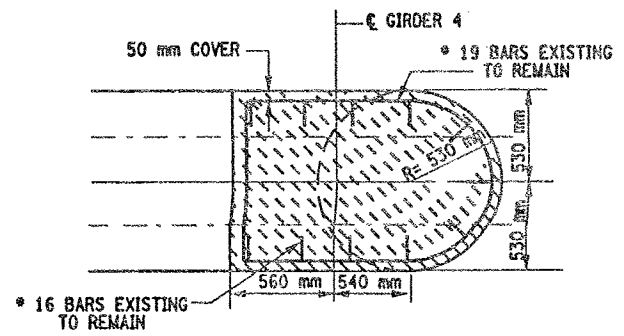

SECTION FF-FF
NOT TO SCALE

LIST OF ITEMS USED

ITEM 555.0105M - CONCRETE FOR STRUCTURES, CLASS A (CM)
ITEM 15565.4302M - BRIDGE BEARING RESTORATION (EA)
ITEM 580.01M - REMOVAL OF STRUCTURAL CONCRETE (CM)
ITEM 582.05M - REM. OF STRUC. CONC. - REPLACE WITH CLASS A CONCRETE (CM)
ITEM 582.07M - REM. OF STRUC. CONC. - REPL. W/ VERT. OVERHEAD PATCH MAT'L (SM)
ITEM 585.02M - STRUCTURAL LIFTING OPERATIONS - TYPE B (EA)
ITEM 585.03M - STRUCTURAL LIFTING OPERATION - TYPE C (EA)

FED ROAD REG. NO.	STATE	CONTRACT NO.	SHEET NO.	TOTAL SHEETS
1	N.Y.	D259214	326	432

BRIDGE REHABILITATION PROJECT (ELEMENT SPECIFIC)
VARIOUS BRIDGES ON INTERSTATE 481
TOWNS OF DEWITT AND CICERO
ONONDAGA COUNTY
P.I.N. 305613 | B.I.N. 1093572

NOTES:

1. ALL REINFORCEMENT TO REMAIN.
2. RESTORE TO ORIGINAL DIMENSIONS.
3. PEDESTALS NUMERICALLY NUMBERED FROM WEST TO EAST.
4. FOR THE CONCRETE REPAIR AREAS, THE CONCRETE SHALL BE REMOVED TO AT LEAST 40mm MIN. BEYOND THE ENCOUNTERED REINFORCEMENT AND TO SOUND CONCRETE, A.O.B.E.
5. ELEVATIONS SHOWN ARE FROM ORIGINAL CONTRACT PLANS F.I.S.H. 70-7 AND ARE FOR REFERENCE ONLY.
6. REMOVAL DIMENSIONS SHOWN ON PLANS ARE ESTIMATED AND SHALL BE FIELD VERIFIED BY THE CONTRACTOR PRIOR TO BEGINNING OF REMOVAL OPERATIONS A.O.B.E.
7. PERFORM BEARING RESTORATION TO ALL EXPANSION BEARINGS (TO INCLUDE RESETTING OF UNDEREXTENDED OR OVEREXTENDED BEARINGS). SEE DWG. PR17-1S FOR BEARING RESTORATION NOTES. SEE DWG. BR-10 & BR-11 FOR BEARING RESTORATION DETAILS.
8. SEE DWG PR17-10N FOR SECTION DD-DD.
9. SEE DWG. PR17-12S FOR SECTION BB-BB.
10. SEE DWG. PR17-7N FOR SECTION Z-Z.
11. PEDESTALS 2 AND 4 SHALL BE REPLACED TO EXISTING DIMENSIONS, ITEM 555.0105 M
12. ALL CONCRETE REMOVAL SHALL BE SAWCUT TO PRODUCE NEAT REMOVAL LINES. COST TO BE INCLUDED IN THE PRICE BID FOR ITEM 582.05M AND ITEM 582.07M.
13. FOR JACKING NOTES SEE DWG PR17-1S.

* PERFORM STRUCTURAL LIFTING UNDER ITEM 585.02M - STRUCTURAL LIFTING OPERATIONS - TYPE B (LIFTING AT A PIER) OR ITEM 585.03M - STRUCTURAL LIFTING OPERATIONS - TYPE C (LIFTING AT A PIER WHERE THE CONTRACTOR SHALL BE REQUIRED TO LIFT OFF THE FOOTING AND/OR GROUND LEVEL.

JACKING LOADS:

D.L. = 75 MT
L.L. = 50 MT
TOTAL = 125 MT

LEGEND:

ITEM 582.05M - REMOVAL OF STRUCTURAL CONCRETE- REPLACE WITH CLASS A CONCRETE. (CM)

ITEM 582.07M - REMOVAL OF STRUCTURAL CONCRETE - REPLACE WITH VERTICAL OVERHEAD PATCH MATERIAL. (SM)

ITEM 580.01 M - REMOVAL OF STRUCTURAL CONCRETE. (CM) AND ITEM 555.0105 M - CONCRETE FOR STRUCTURES CLASS A. (CM)

ALL DIMENSIONS ARE IN mm UNLESS OTHERWISE NOTED

AS BUILT REVISIONS

SIGNATURE DATE

INTERSTATE 481 NB
OVER
CSX RAILROAD YARD
PIER 11

STATE OF NEW YORK
DEPARTMENT OF TRANSPORTATION

FILENAME	REGION	DATE	DRAWING NO.
305613AE_P11	3	10/02	PR17-11N

DESIGN SUPERVISOR ____ JOB MANAGER ____ DESIGNED BY ____ ESTIMATED BY ____ DRAFTED BY ____ CHECKED BY ____ CHECKED BY

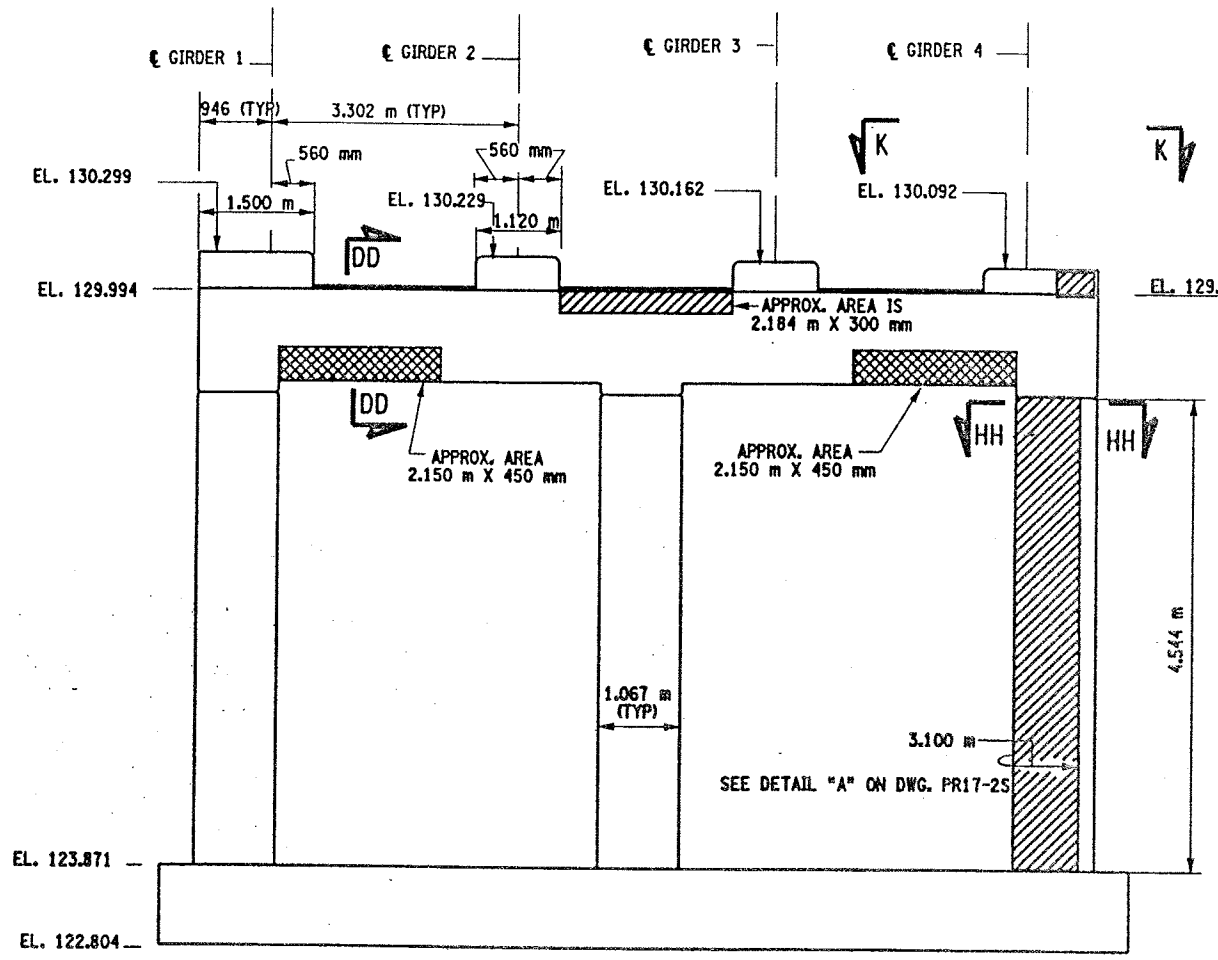

PIER 12 - FRONT FACE (LOOKING NORTH)

BIN 1093572

SCALE: 1 TO 50

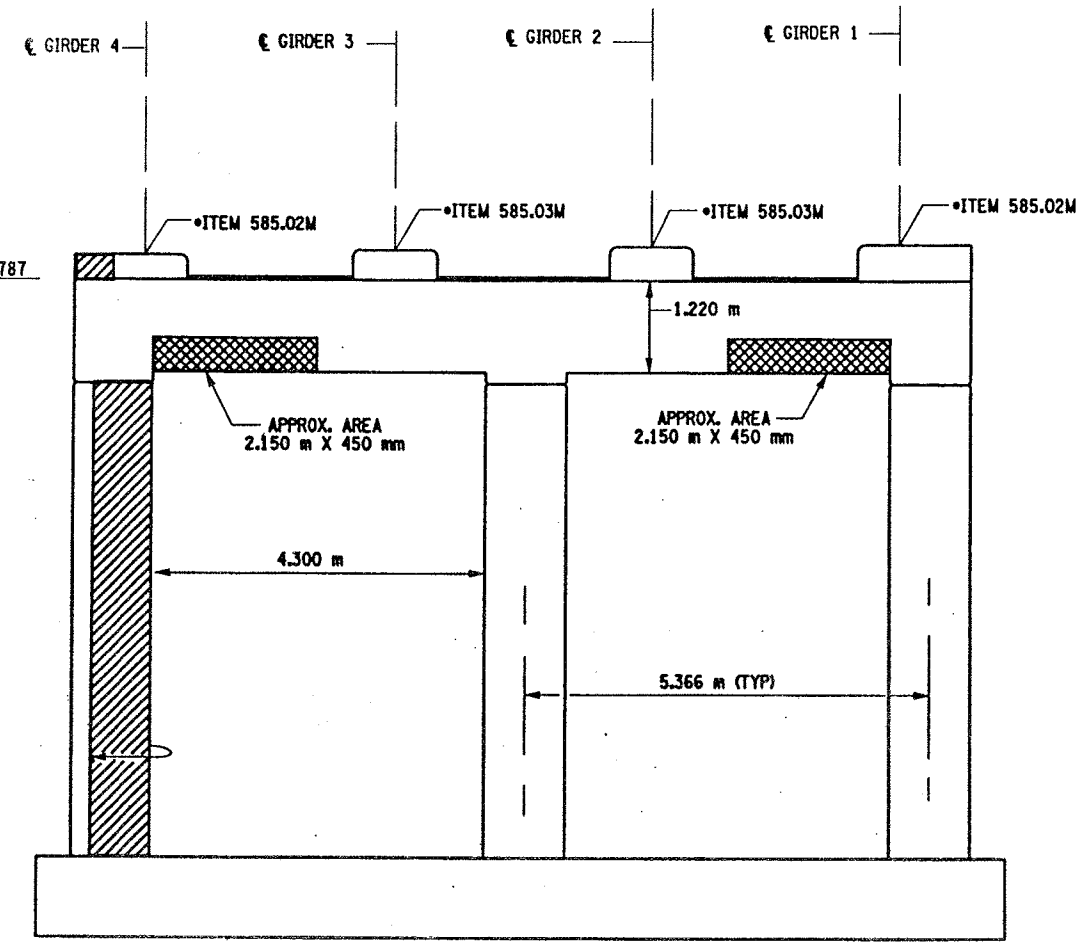

PIER 12 - BACK FACE (LOOKING SOUTH)

BIN 1093572

SCALE: 1 TO 50

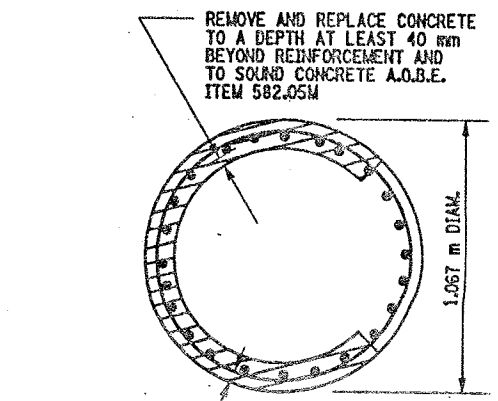

SECTION HH-HH

NOT TO SCALE

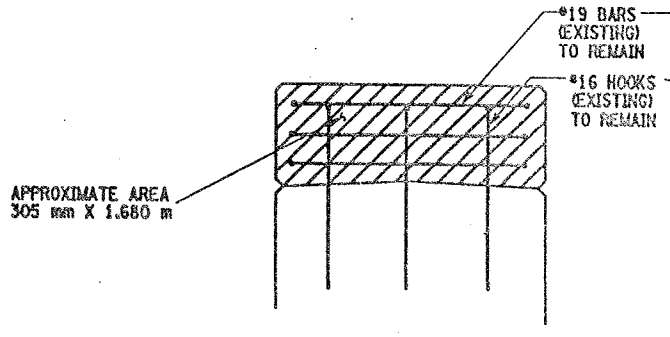

SECTION N-N

NOT TO SCALE

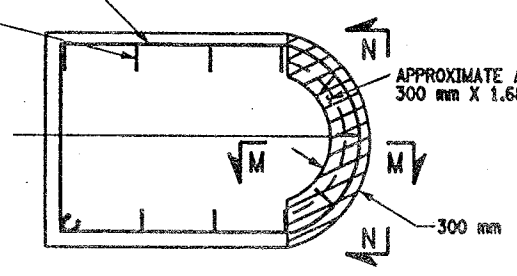

SECTION K-K

NOT TO SCALE

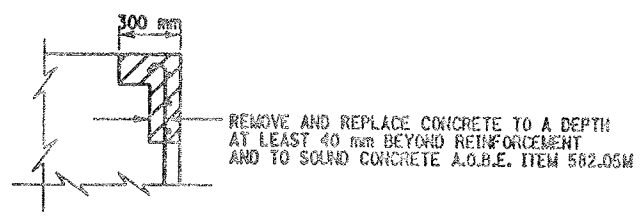

SECTION M-M

NOT TO SCALE

LIST OF ITEMS USED:

ITEM 15565.4302M - BRIDGE BEARING RESTORATION (EA)
ITEM 582.05M - REM. OF STRUC. CONC. - REPLACE WITH CLASS A CONCRETE (CM)
ITEM 582.07M - REM. OF STRUC. CONC. - REPL. W/ VERT. OVERHEAD PATCH MAT'L (SM)
ITEM 585.02M - STRUCTURAL LIFTING OPERATIONS - TYPE B (EA)
ITEM 585.03M - STRUCTURAL LIFTING OPERATION - TYPE C (EA)

FED ROAD REG. NO.	STATE	CONTRACT NO.	SHEET NO.	TOTAL SHEETS
1	N.Y.	D259214	327	432

BRIDGE REHABILITATION PROJECT (ELEMENT SPECIFIC)
VARIOUS BRIDGES ON INTERSTATE 481
TOWNS OF DEWITT AND CICERO
ONONDAGA COUNTY
P.I.N. 305613 B.I.N. 1093572

NOTES:

1. ALL REINFORCEMENT TO REMAIN.
2. RESTORE TO ORIGINAL DIMENSIONS.
3. PEDESTALS NUMERICALLY NUMBERED FROM WEST TO EAST.
4. FOR THE CONCRETE REPAIR AREAS, THE CONCRETE SHALL BE REMOVED TO AT LEAST 40mm MIN. BEYOND THE ENCOUNTERED REINFORCEMENT AND TO SOUND CONCRETE, A.O.B.E.
5. ELEVATIONS SHOWN ARE FROM ORIGINAL CONTRACT PLANS F.I.S.H. 70-7 AND ARE FOR REFERENCE ONLY.
6. REMOVAL DIMENSIONS SHOWN ON PLANS ARE ESTIMATED AND SHALL BE FIELD VERIFIED BY THE CONTRACTOR PRIOR TO BEGINNING OF REMOVAL OPERATIONS A.O.B.E.
7. PERFORM BEARING RESTORATION TO ALL EXPANSION BEARINGS (TO INCLUDE RESETTING OF UNDEREXTENDED OR OVEREXTENDED BEARINGS). SEE DWG. PR17-1S FOR BEARING RESTORATION NOTES. SEE DWG. BR-10 & BR-11 FOR BEARING RESTORATION DETAILS.
8. SEE DWG PR17-10N FOR SECTION DD-DD.
9. ALL CONCRETE REMOVAL SHALL BE SAWCUT TO PRODUCE NEAT REMOVAL LINES. COST TO BE INCLUDED IN THE PRICE BID FOR ITEM 582.05M AND 582.07M.
10. FOR JACKING NOTES SEE DWG PR17-1S.

• PERFORM STRUCTURAL LIFTING UNDER ITEM 585.02M - STRUCTURAL LIFTING OPERATIONS - TYPE B (LIFTING AT A PIER) OR ITEM 585.03M - STRUCTURAL LIFTING OPERATIONS - TYPE C (LIFTING AT A PIER WHERE THE CONTRACTOR SHALL BE REQUIRED TO LIFT OFF THE FOOTING AND/OR GROUND LEVEL.

JACKING LOADS:

D.L. = 75 MT
L.L. = 50 MT
TOTAL = 125 MT

LEGEND:

ITEM 582.05M - REMOVAL OF STRUCTURAL CONCRETE- REPLACE WITH CLASS A CONCRETE. (CM)

ITEM 582.07M - REMOVAL OF STRUCTURAL CONCRETE - REPLACE WITH VERTICAL OVER-HEAD PATCH MATERIAL. (SM)

ALL DIMENSIONS ARE IN mm UNLESS OTHERWISE NOTED

AS BUILT REVISIONS

SIGNATURE DATE

INTERSTATE 481 NB
OVER
CSX RAILROAD YARD
PIER 12

STATE OF NEW YORK
DEPARTMENT OF TRANSPORTATION

FILENAME	REGION	DATE	DRAWING NO.
305613AE.P12	3	10/02	PR17-12N

DESIGN SUPERVISOR ____ JOB MANAGER ____ DESIGNED BY ____ DRAFTED BY ____ ESTIMATED BY ____ CHECKED BY ____ CHECKED BY

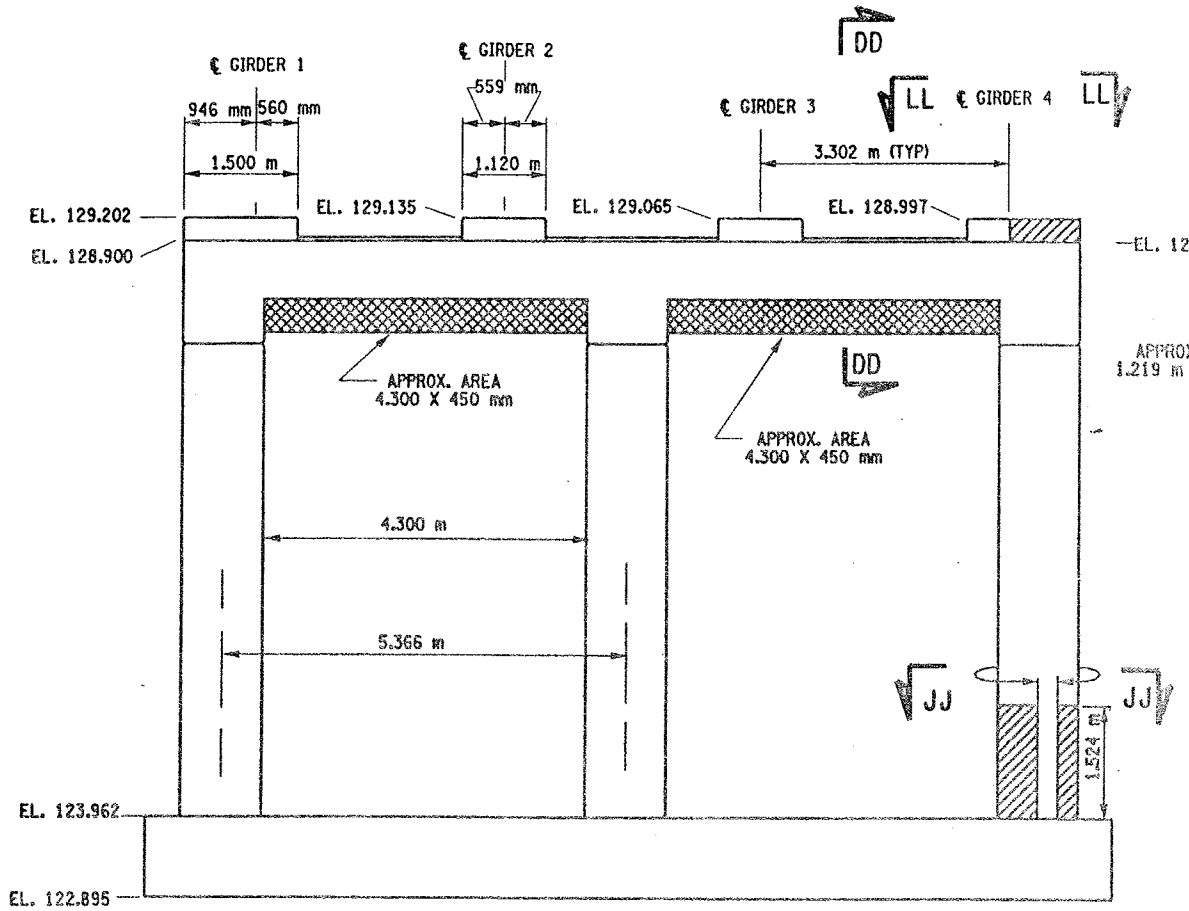

PIER 13 - FRONT FACE (LOOKING NORTH)
BIN 1093572
SCALE: 1 TO 50

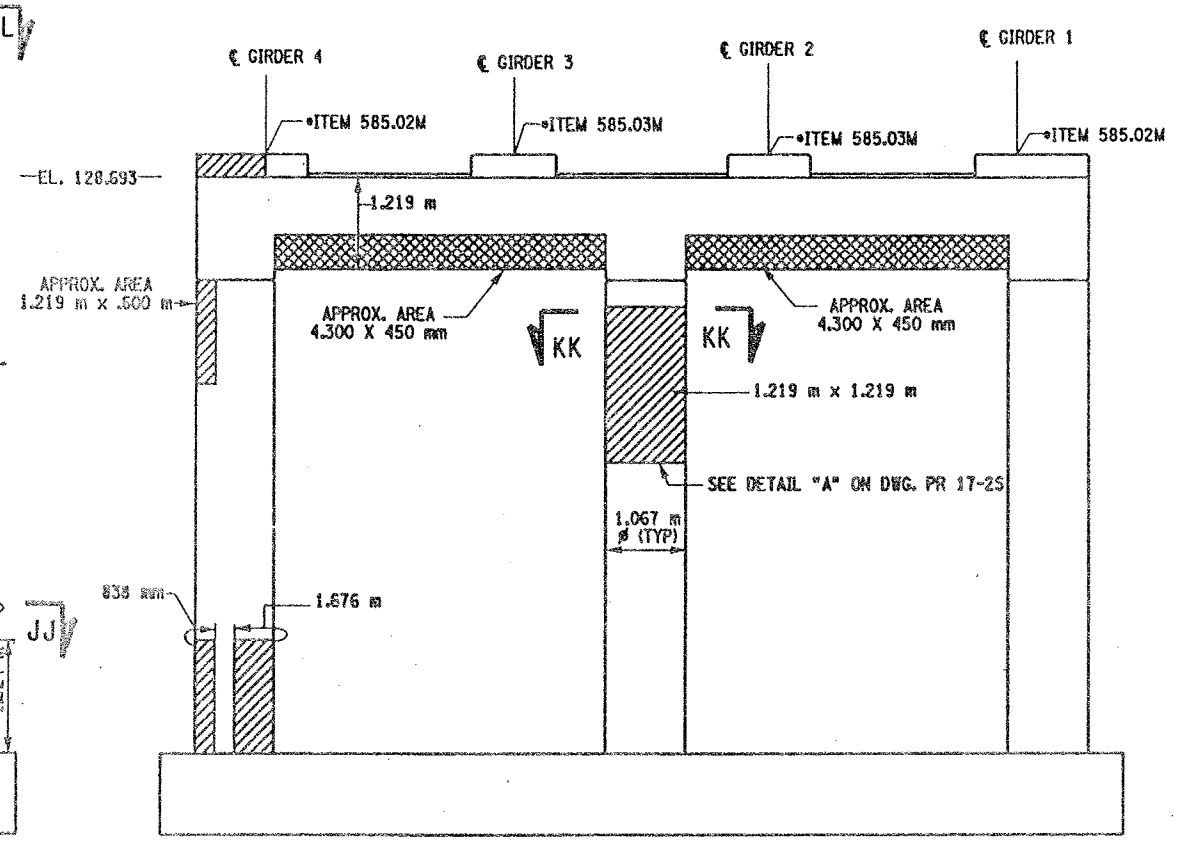

PIER 13- BACK FACE (LOOKING SOUTH)
BIN 1093572
SCALE: 1 TO 50

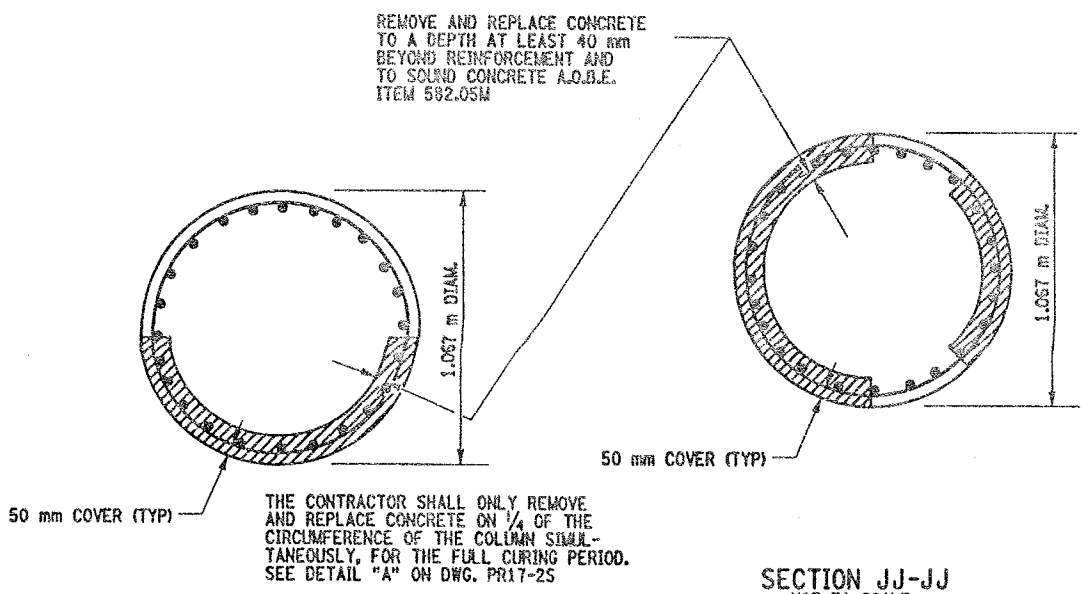

SECTION KK-KK

NOT TO SCALE

SECTION JJ-JJ
NOT TO SCALE

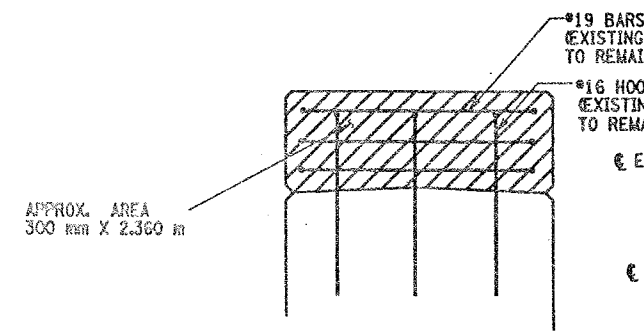

SECTION N-N
NOT TO SCALE

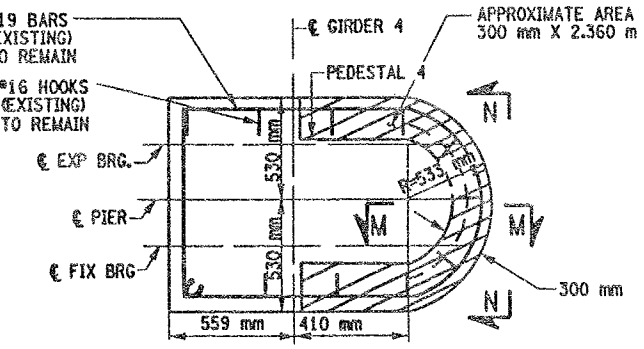

SECTION LL- LL
NOT TO SCALE

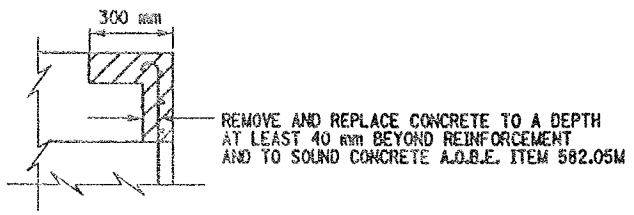

SECTION M-M
NOT TO SCALE

LIST OF ITEMS USED:

ITEM 15565.4302M - BRIDGE BEARING RESTORATION (EA)
ITEM 582.05M - REM. OF STRUC. CONC. - REPLACE WITH CLASS A CONCRETE (CM)
ITEM 582.07M - REM. OF STRUC. CONC. - REPL. W/ VERT. OVERHEAD PATCH MAT'L (SM)
ITEM 585.02M - STRUCTURAL LIFTING OPERATIONS - TYPE B (EA)
ITEM 585.03M - STRUCTURAL LIFTING OPERATION - TYPE C (EA)

FED ROAD REG. NO.	STATE	CONTRACT NO.	SHEET NO.	TOTAL SHEETS
1	N.Y.	D259214	328	432

BRIDGE REHABILITATION PROJECT (ELEMENT SPECIFIC)
VARIOUS BRIDGES ON INTERSTATE 481
TOWNS OF DEWITT AND CICERO
ONONDAGA COUNTY
P.I.N. 305613 B.I.N. 1093572

NOTES:

1. ALL REINFORCEMENT TO REMAIN.
2. RESTORE TO ORIGINAL DIMENSIONS.
3. PEDESTALS NUMERICALLY NUMBERED FROM WEST TO EAST.
4. FOR THE CONCRETE REPAIR AREAS, THE CONCRETE SHALL BE REMOVED TO AT LEAST 40mm MIN. BEYOND THE ENCOUNTERED REINFORCEMENT AND TO SOUND CONCRETE, A.O.B.E.
5. ELEVATIONS SHOWN ARE FROM ORIGINAL CONTRACT PLANS F.I.S.H. 70-7 AND ARE FOR REFERENCE ONLY.
6. REMOVAL DIMENSIONS SHOWN ON PLANS ARE ESTIMATED AND SHALL BE FIELD VERIFIED BY THE CONTRACTOR PRIOR TO BEGINNING OF REMOVAL OPERATIONS A.O.B.E.
7. PERFORM BEARING RESTORATION TO ALL EXPANSION BEARINGS (TO INCLUDE RESETTING OF UNDEREXTENDED OR OVEREXTENDED BEARINGS). SEE DWG. PR17-1S FOR BEARING RESTORATION NOTES. SEE DWG. BR-10 & BR-11 FOR BEARING RESTORATION DETAILS.
8. SEE DWG. PR 17-10N FOR SECTION DD-DD.
9. ALL CONCRETE REMOVAL SHALL BE SAWCUT TO PRODUCE NEAT REMOVAL LINES. COST TO BE INCLUDED IN THE PRICE BID FOR ITEM 582.05M AND 582.07M.
10. FOR JACKING NOTES SEE DWG PR17-1S.

• PERFORM STRUCTURAL LIFTING UNDER ITEM 585.02M - STRUCTURAL LIFTING OPERATIONS - TYPE B (LIFTING AT A PIER) OR ITEM 585.03M - STRUCTURAL LIFTING OPERATIONS - TYPE C (LIFTING AT A PIER WHERE THE CONTRACTOR SHALL BE REQUIRED TO LIFT OFF THE FOOTING AND/OR GROUND LEVEL.

JACKING LOADS:

D.L. = 75 MT
L.L. = 50 MT
TOTAL = 125 MT

LEGEND:

ITEM 582.05M - REMOVAL OF STRUCTURAL CONCRETE- REPLACE WITH CLASS A CONCRETE. (CM)

ITEM 582.07M - REMOVAL OF STRUCTURAL CONCRETE - REPLACE WITH VERTICAL OVER-HEAD PATCH MATERIAL. (SM)

ALL DIMENSIONS ARE IN mm UNLESS OTHERWISE NOTED

AS BUILT REVISIONS

SIGNATURE DATE

INTERSTATE 481 NB
OVER
CSX RAILROAD YARD
PIER 13

STATE OF NEW YORK
DEPARTMENT OF TRANSPORTATION

FILENAME	REGION	DATE	DRAWING NO.
305613AE.P13	3	10/02	PR17-13N

DESIGN SUPERVISOR ____ JOB MANAGER ____ DESIGNED BY ____ CHECKED BY ____ ESTIMATED BY ____ DRAFTED BY ____ CHECKED BY ____

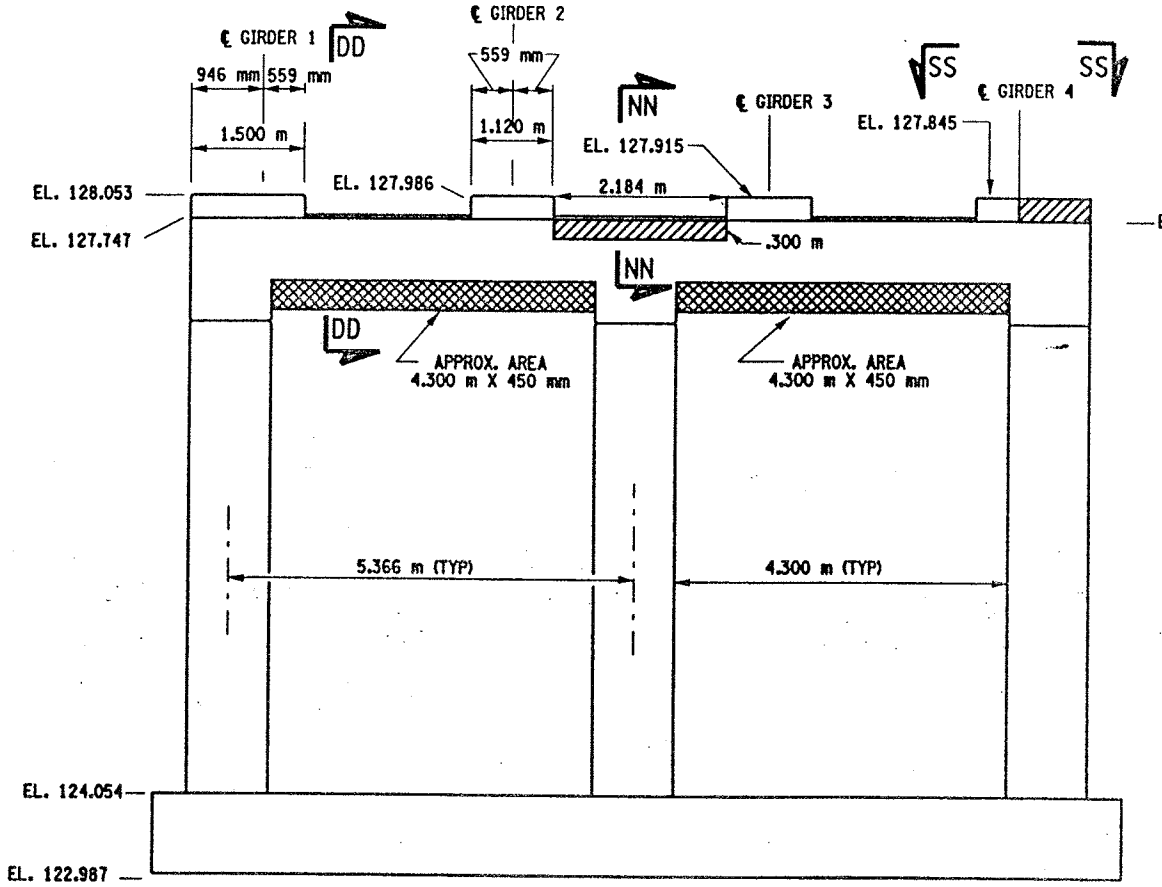

PIER 14 - FRONT FACE (LOOKING NORTH)
BIN 1093572
SCALE: 1 TO 50

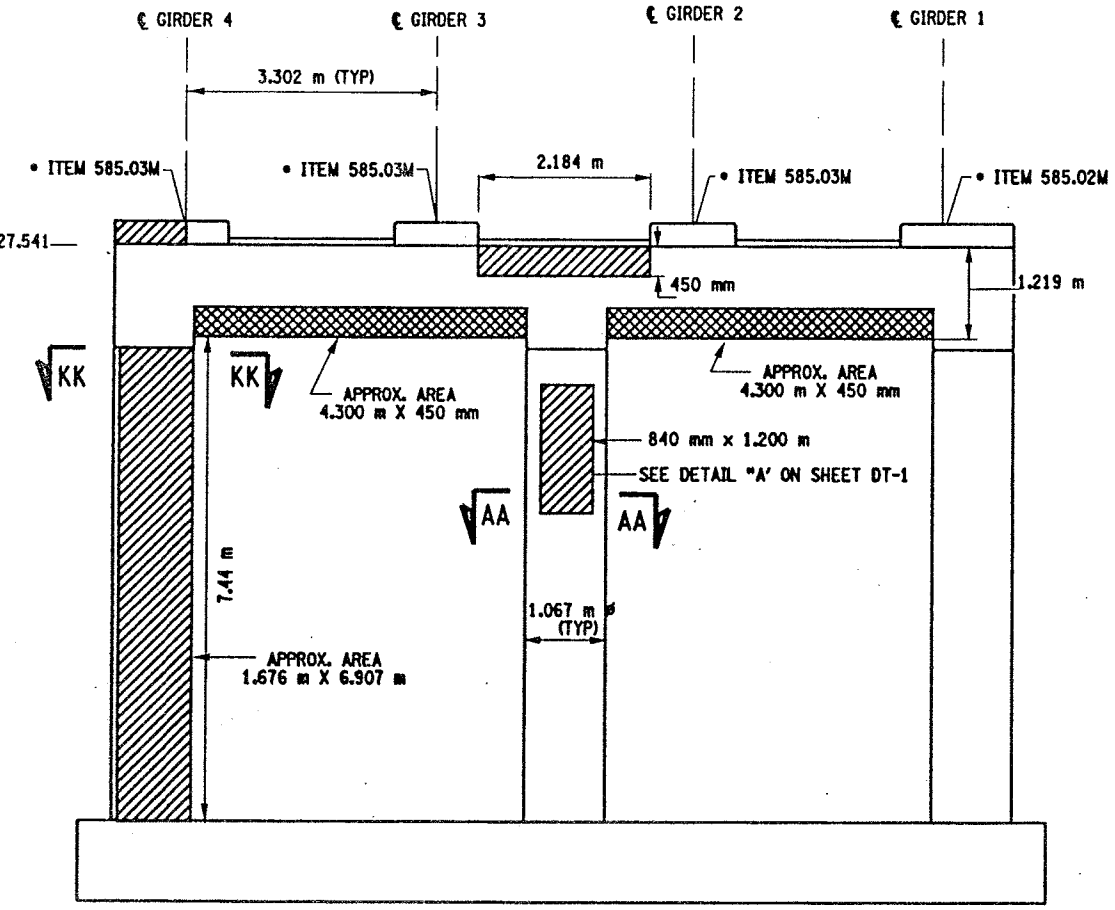

PIER 14 - BACK FACE (LOOKING SOUTH)
BIN 1093572
SCALE: 1 TO 50

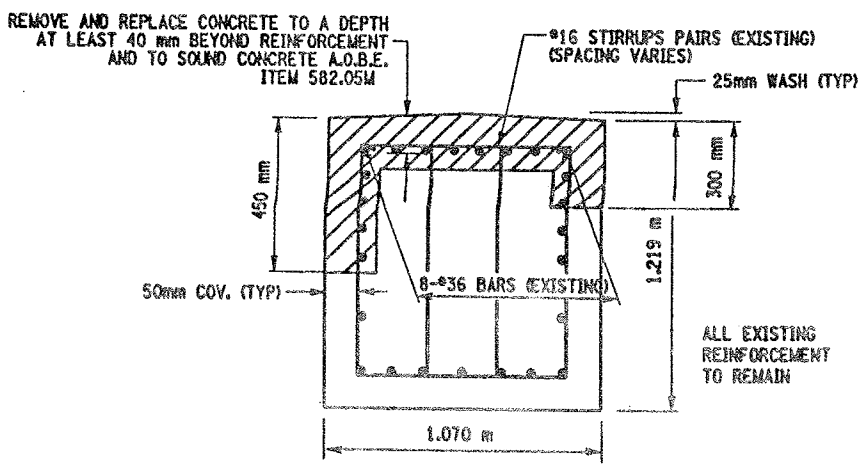

SECTION NN-NN
NOT TO SCALE

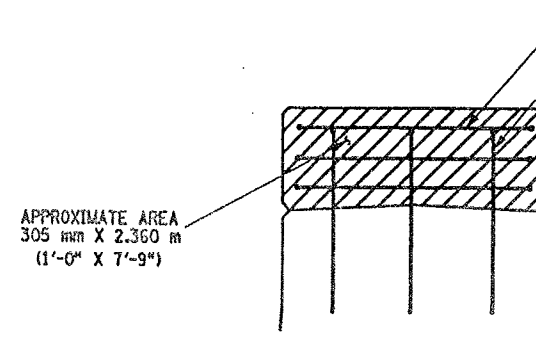

SECTION N-N
NOT TO SCALE

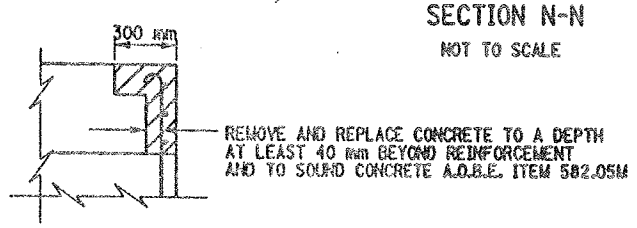

SECTION M-M
NOT TO SCALE

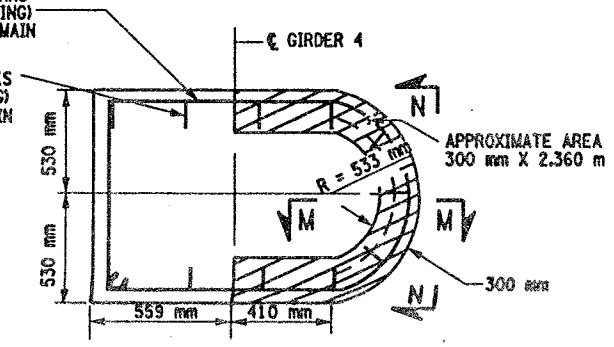

SECTION SS-SS
NOT TO SCALE

LIST OF ITEMS USED:

ITEM 15565.4302M - BRIDGE BEARING RESTORATION (EA)
ITEM 582.05M - REM. OF STRUC. CONC. - REPLACE WITH CLASS A CONCRETE (CM)
ITEM 582.07M - REM. OF STRUC. CONC. - REPL. W/ VERT. OVERHEAD PATCH MAT'L (SM)
ITEM 585.02M - STRUCTURAL LIFTING OPERATIONS - TYPE B (EA)
ITEM 585.03M - STRUCTURAL LIFTING OPERATION - TYPE C (EA)

FED ROAD REG. NO.	STATE	CONTRACT NO.	SHEET NO.	TOTAL SHEETS
1	N.Y.	D259214	329	432

BRIDGE REHABILITATION PROJECT (ELEMENT SPECIFIC)
VARIOUS BRIDGES ON INTERSTATE 481
TOWNS OF DEWITT AND CICERO
ONONDAGA COUNTY
P.I.N. 305613 B.I.N. 1093572

NOTES:

1. ALL REINFORCEMENT TO REMAIN.
2. RESTORE TO ORIGINAL DIMENSIONS.
3. PEDESTALS NUMERICALLY NUMBERED FROM WEST TO EAST.
4. FOR THE CONCRETE REPAIR AREAS, THE CONCRETE SHALL BE REMOVED TO AT LEAST 40mm MIN. BEYOND THE ENCOUNTERED REINFORCEMENT AND TO SOUND CONCRETE, A.O.B.E.
5. ELEVATIONS SHOWN ARE FROM ORIGINAL CONTRACT PLANS F.I.S.H. 70-7 AND ARE FOR REFERENCE ONLY.
6. REMOVAL DIMENSIONS SHOWN ON PLANS ARE ESTIMATED AND SHALL BE FIELD VERIFIED BY THE CONTRACTOR PRIOR TO BEGINNING OF REMOVAL OPERATIONS A.O.B.E.
7. PERFORM BEARING RESTORATION TO ALL EXPANSION BEARINGS (TO INCLUDE RESETTING OF UNDEREXTENDED OR OVEREXTENDED BEARINGS). SEE DWG. PR17-1S FOR BEARING RESTORATION NOTES. SEE DWG. BR-10 & BR-11 FOR BEARING RESTORATION DETAILS.
8. SEE DWG. PR17-10N FOR SECTION DD-DD.
9. SEE DWG. PR17-7N FOR SECTION AA-AA.
10. SEE DWG. PR17-13N FOR SECTION KK-KK.
11. ALL CONCRETE REMOVAL SHALL BE SAWCUT TO PRODUCE NEAT REMOVAL LINES. COST TO BE INCLUDED IN THE PRICE BID FOR ITEM 582.05M AND ITEM 582.07M.
12. FOR JACKING NOTES SEE DWG PR17-1S.

• PERFORM STRUCTURAL LIFTING UNDER ITEM 585.02M - STRUCTURAL LIFTING OPERATIONS - TYPE B (LIFTING AT A PIER) OR ITEM 585.03M - STRUCTURAL LIFTING OPERATIONS - TYPE C (LIFTING AT A PIER WHERE THE CONTRACTOR SHALL BE REQUIRED TO LIFT OFF THE FOOTING AND/OR GROUND LEVEL.

JACKING LOADS:

D.L. = 75 MT
L.L. = 50 MT
TOTAL = 125 MT

LEGEND:

ITEM 582.05M - REMOVAL OF STRUCTURAL CONCRETE- REPLACE WITH CLASS A CONCRETE. (CM)

ITEM 582.07M - REMOVAL OF STRUCTURAL CONCRETE - REPLACE WITH VERTICAL OVERHEAD PATCH MATERIAL. (SM)

ALL DIMENSIONS ARE IN mm UNLESS OTHERWISE NOTED

AS BUILT REVISIONS

SIGNATURE DATE

INTERSTATE 481 NB
OVER
CSX RAILROAD YARD
PIER 14

STATE OF NEW YORK
DEPARTMENT OF TRANSPORTATION

FILENAME	REGION	DATE	DRAWING NO.
305613AE_P14	3	10/02	PR17-14N

DESIGN SUPERVISOR ____ JOB MANAGER ____ DESIGNED BY ____ ESTIMATED BY ____ DRAFTED BY ____ CHECKED BY ____ CHECKED BY

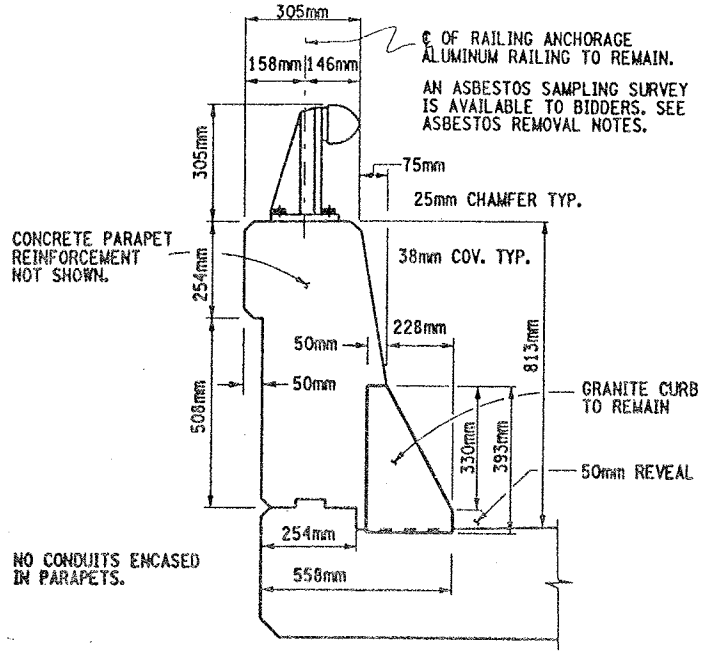

TYPICAL SECTION THRU SUPERSTRUCTURE
PARAPET CONCRETE DETAILS

NOT TO SCALE

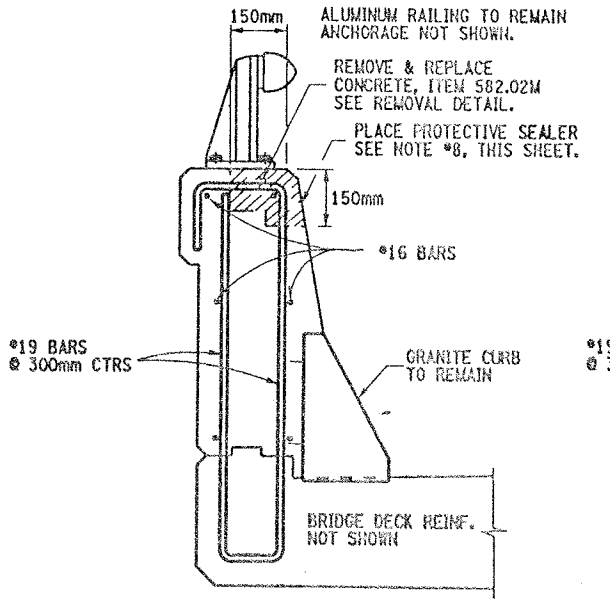

(I) REPAIR DETAILS
150mmX150mm TOP

NOT TO SCALE

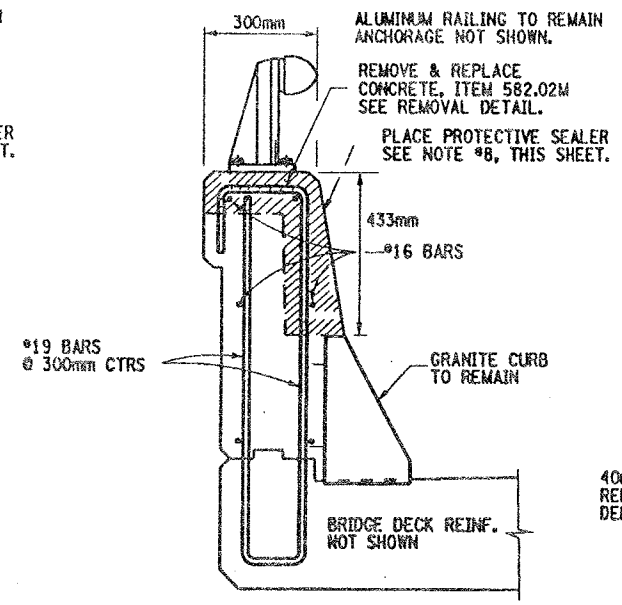

(II) REPAIR DETAILS
FULL TOP & FRONT FACE

NOT TO SCALE

CONCRETE REMOVAL NOTES:

REMOVE ALL DETERIORATED CONCRETE TO SOUND CONCRETE AND AT LEAST 40mm BEYOND ENCOUNTERED REINFORCEMENT BARS, AOBE. PAYMENT TO BE PAID UNDER ITEM 582.05M.

CONCRETE REMOVAL, SAWCUT 6mm DEPTH MINIMUM TO PRODUCE NEAT REMOVAL LINES, ALL COSTS SHALL BE INCLUDED IN PRICE BID FOR ITEM 582.05M.

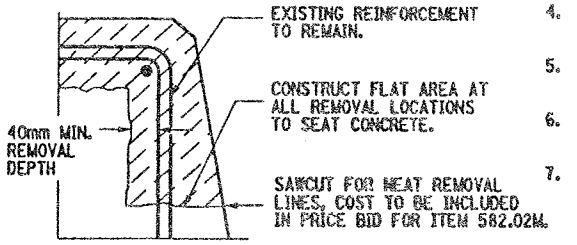

TYPICAL REMOVAL DETAIL

NOT TO SCALE

FED ROAD REG. NO.	STATE	CONTRACT NO.	SHEET NO.	TOTAL SHEETS
1	N.Y.	D259214	330	432

BRIDGE REHABILITATION PROJECT (ELEMENT SPECIFIC)
VARIOUS BRIDGES ON INTERSTATE 481
TOWNS OF DEWITT AND CICERO
ONONDAGA COUNTY
P.I.N. 305613 B.I.N. 1093571 & 1093572

CONCRETE PARAPET REPAIR NOTES:

1. ALUMINUM RAILING TO REMAIN, ANCHORAGE NOT SHOWN.
2. EXISTING PARAPET REINFORCEMENT TO REMAIN.
3. GRANITE CURB TO REMAIN, ANCHOR BARS NOT SHOWN.
4. REMOVAL OF CONCRETE TO LIMITS SHOWN, AOBE. SEE TYPICAL REMOVAL DETAIL, THIS SHEET.
5. ALL DIMENSIONS SHOWN FOR CONCRETE REMOVAL ARE APPROXIMATE AND SHALL BE FIELD VERIFIED.
6. CONTRACTOR SHALL RESTORE CONCRETE PARAPET TO ORIGINAL DIMENSIONS.
7. IT IS DESIRABLE TO RETAIN ALL EXISTING GRANITE CURB, BUT AT SOME LOCATIONS ADJACENT TO THE JOINT BLOCK-OUTS IT MAY BE NECESSARY TO REPLACE OR REPAIR THE SECTION OF CURB, TO THE SATISFACTION OF THE ENGINEER. COST TO BE INCLUDE IN PRICE BID FOR ITEM 582.05M.
8. AFTER PARAPET REPAIRS ARE COMPLETED AND SUFFICIENT CURE TIME AS DECIDED BY ENGINEER, APPLY A COATING TYPE PROTECTIVE SEALERS WHICH MEETS MATERIAL SPECIFICATION 717-04. THIS PROTECTIVE SEALER SHALL BE APPLIED TO THE FRONT FACE AND TOP OF ALL PARAPETS (REPAIRED AREAS & ORIGINAL AREAS) TO ENSURE A UNIFORMED APPEARANCE. COST OF THIS SEALER TO BE INCLUDED IN PRICE BID FOR ITEM 18559.1696 M.

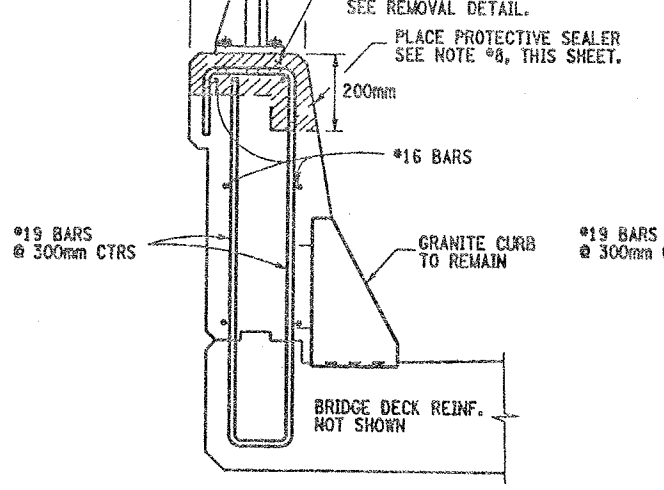

(III) REPAIR DETAILS
FULL TOP & 200mm FACE

NOT TO SCALE

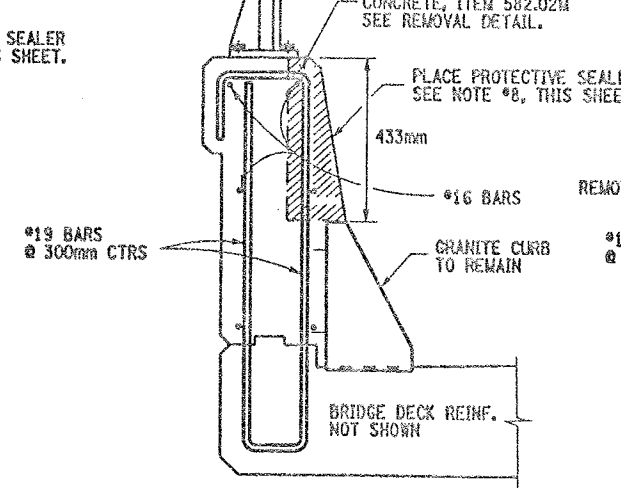

(IV) REPAIR DETAILS
FRONT FACE

NOT TO SCALE

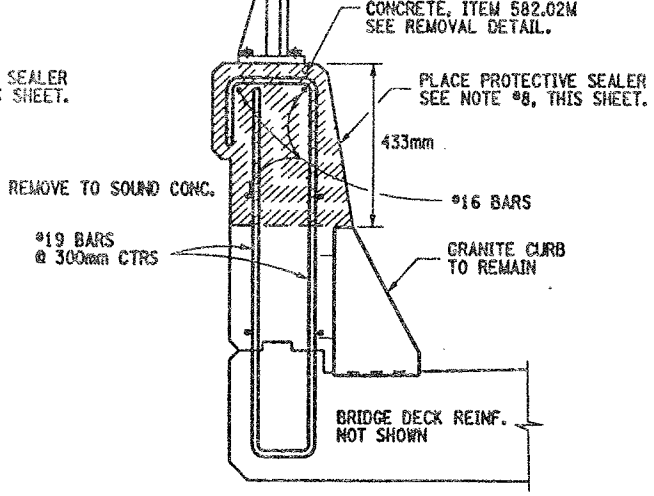

(V) REPAIR DETAILS
FULL SECTION

NOT TO SCALE

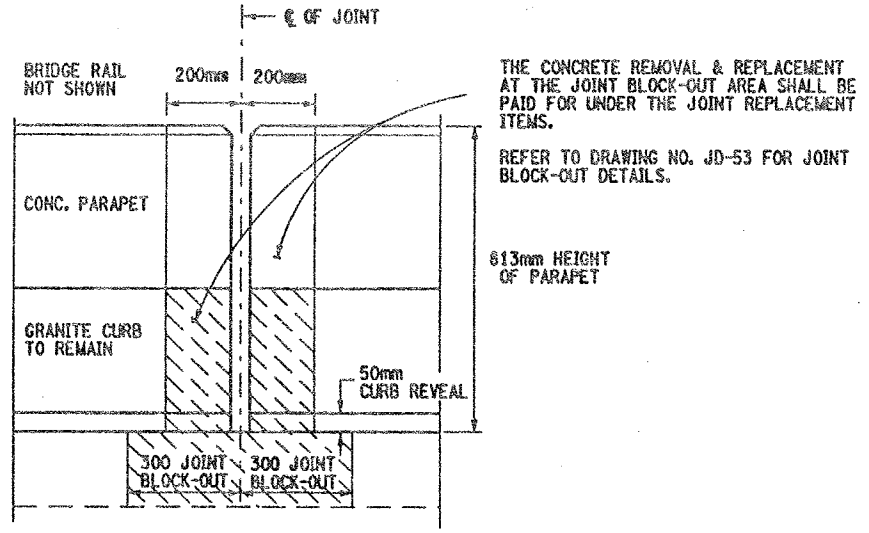

FRONT FACE PARAPET CONCRETE DETAIL
SHOWS TYPICAL CONC. REMOVAL AT JOINT

NOT TO SCALE

ASBESTOS MATERIAL REMOVAL NOTES:

THE REMOVAL OF ALL ASBESTOS CONTAINING CAULK (ITEM 210.5433M) SHALL BE COMPLETED PRIOR TO COMMENCEMENT OF ANY PARAPET REPAIR WORK.

THIS REMOVAL OF THE ASBESTOS CAULK SHALL BE PERFORMED AT EACH BRIDGE RAIL BASE PLATE ON BOTH N.B. & S.B. BRIDGES. (REMOVE ASBESTOS CALKING AT ALL RAIL BASE PLATES BOTH BRIDGES)

AFTER COMPLETION OF THE PARAPET REPAIRS INSTALL A CAULKING COMPOUND AROUND THE BASE PLATES OF THE RAILING WHICH MEETS MATERIAL SPECIF. 705-06 AND IS ACCEPTABLE TO THE ENGINEER. PAID UNDER ITEM 210.5433M.

REFER TO ORIGINAL CONTRACT PLANS F.I.S.H. 70-7 FOR RAIL LAY-OUT DETAILS.

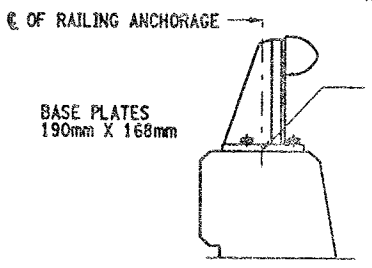

REMOVE EXISTING GRAY ASBESTOS CAULKING COMPOUND AT THE ALUMINUM RAILING BASE PLATES, IT IS ASSUMED THAT THE CAULK COMPOUND IS SURROUNDING (PERIMETER) THE RAILING BASE PLATES. THIS PERIMETER REMOVAL OPERATION SHALL BE PERFORM AT EACH RAILING BASE PLATE ON BOTH STRUCTURES.

HOWEVER, SOME CAULK MATERIAL MAY BE FOUND UNDER THE RAILING BASE PLATES. THIS CAULKING COMPOUND UNDER THE BASE PLATES SHALL BE REMOVED ONLY AT LOCATIONS WHERE THE PARAPET CONCRETE REPAIRS WILL DISTRUB THE MATERIAL (REMOVAL AS ENCOUNTERED).

ALL COSTS TO BE PAID UNDER ITEM 210.5433M. SEE ASBESTOS MATERIAL REMOVAL NOTES, THIS SHEET.

TYPICAL BRIDGE RAIL DETAIL

NOT TO SCALE

ITEMS USED:

ITEM 582.05M - REMOVAL OF STRUCTURAL CONCRETE REPLACE WITH CLASS "A" CONCRETE (CM)

ITEM 210.5433M - REMOVAL & DISPOSAL OF ASBESTOS CONTAINING CAULK (BV 12) (LS)

ITEM 18559.1696M - PROTECTIVE SEALING OF STRUCTURAL CONCRETE (SM)

ALL DIMENSIONS ARE IN mm UNLESS OTHERWISE NOTED

AS BUILT REVISIONS

SIGNATURE DATE

INTERSTATE 481 OVER CSX RR YARD

PARAPET REPAIR DETAILS

STATE OF NEW YORK
DEPARTMENT OF TRANSPORTATION

FILENAME	REGION	DATE	DRAWING NO.
305613AB.R1A	3	10/02	PW17-1

ESTIMATED BY ____ DRAFTED BY ____ CHECKED BY ____
DESIGN SUPERVISOR ____ JOB MANAGER ____ DESIGNED BY ____

FED ROAD REG. NO.	STATE	CONTRACT NO.	SHEET NO.	TOTAL SHEETS
1	N.Y.	D259214	332	432

BRIDGE REHABILITATION PROJECT (ELEMENT SPECIFIC)
VARIOUS BRIDGES ON INTERSTATE 481
TOWNS OF DEWITT AND CICERO
ONONDAGA COUNTY
P.I.N. 305613 B.I.N. 1093572

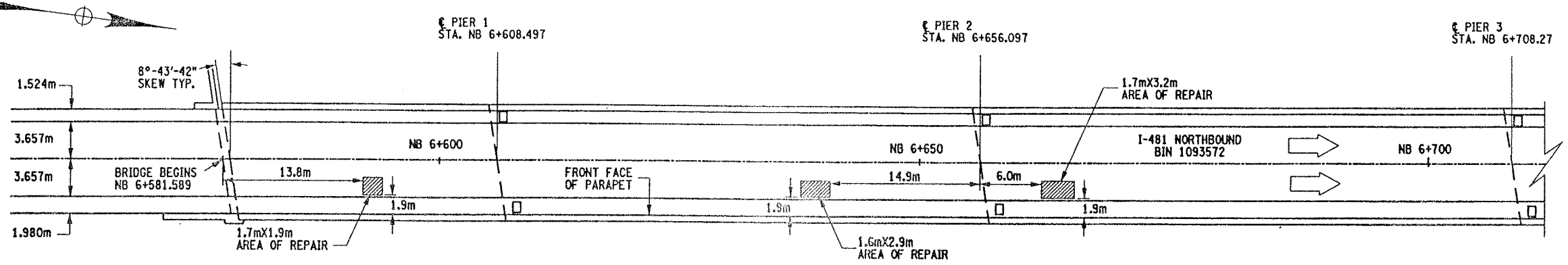

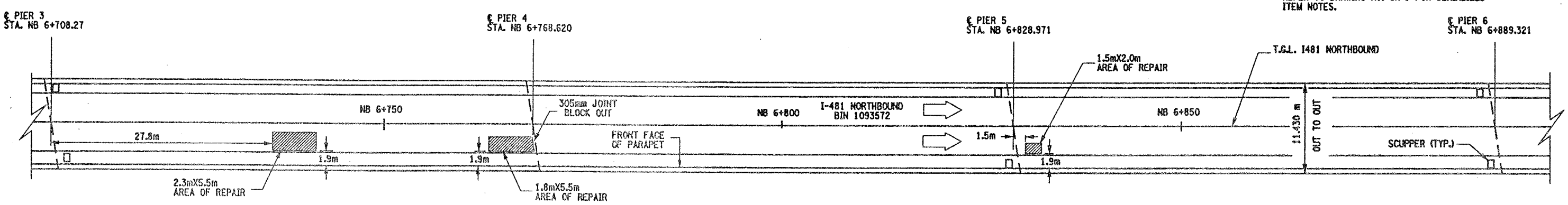

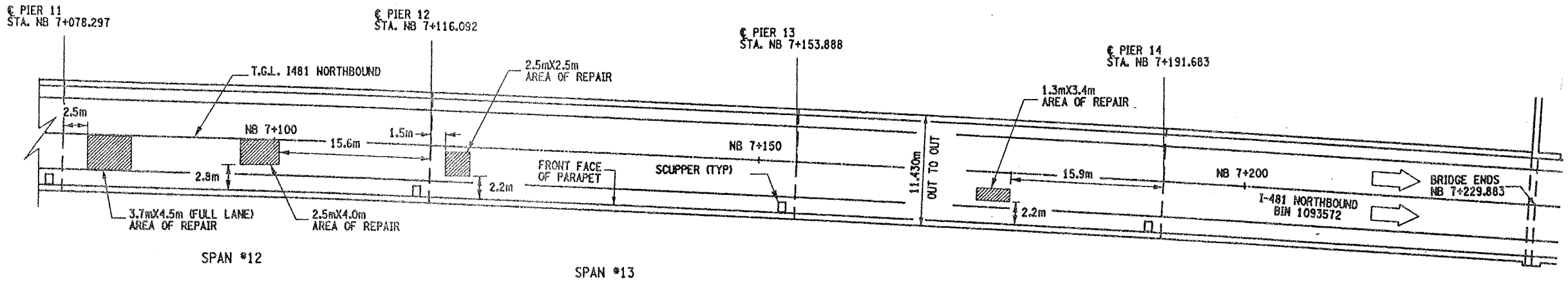

PLAN VIEW OF SPOT DECK REPAIRS

NOT TO SCALE

GENERAL NOTES:

THIS WORK ONLY PERTAINS TO BIN 1093572 NB.

THE AREAS SHOWN ARE THE RESULTS OF FIELD INVESTIGATIONS AND ARE ONLY APPROXIMATE. THE ACTUAL LIMITS SHALL BE AS DIRECTED BY ENGINEER.

NO FULL DEPTH SLAB REPAIRS ARE EXPECTED AT THESE LOCATIONS.

REFER TO DRAWING NO. GN-1 FOR SERIALIZED ITEM NOTES.

REMOVAL NOTES:

ORIGINAL BRIDGE DECK 203mm MONOLITHIC SLAB. A 38mm CONC. OVERLAY HAS BEEN ADDED.

THESE LOCATIONS ARE CURRENTLY FILLED WITH ASPHALT (BLACKTOP). DEPTH OF ASPHALT IS UNKNOWN, ESTIMATED AT @ 38mm. THE REMOVAL OF THE ASPHALT AND CONCRETE TO LIMITS SHOWN TO BE PAID UNDER ITEM 579.02M.

REMOVE CONCRETE TO LIMITS SHOWN AND TO SOUND CONCRETE, AS ORDER BY ENGINEER.

ALL AREAS THAT ARE REPAIRED SHALL ALSO RECEIVE ITEM 558.01 - TRANSVERSE SAWCUT GROOVING AND ITEM 18559.1896M - PROTECTIVE SEALING.

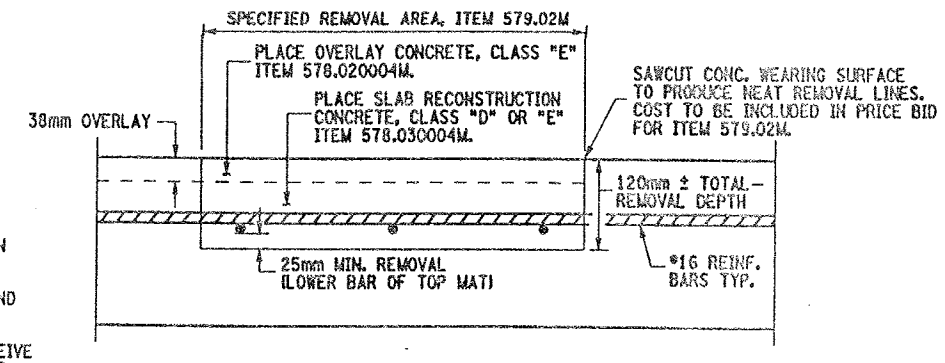

CROSS SECTION VIEW THROUGH REPAIR LOCATION

NOT TO SCALE

ITEMS USED:

ITEM 558.01M - TRANSVERSE SAWCUT GROOVING (SM)
ITEM 18559.1896M - PROTECTIVE SEALING FOR STRUCT. CONC. (SM)
ITEM 578.020004M - OVERLAY CONCRETE, CLASS "E" (SM)
ITEM 578.030004M - SLAB RECONSTRUCTION CONCRETE, CLASS "D" OR "E" (SM)
ITEM 579.02M - REINFORCING BAR EXPOSURE (SM)

ALL DIMENSIONS ARE IN m UNLESS OTHERWISE NOTED

AS BUILT REVISIONS

SIGNATURE DATE

INTERSTATE 481
OVER
CSX RAILROAD YARD
BRIDGE DECK REPAIRS

STATE OF NEW YORK
DEPARTMENT OF TRANSPORTATION

FILENAME	REGION	DATE	DRAWING NO.
305613AB.R1A	3	10/02	DR17-1

DESIGN SUPERVISOR — JOB MANAGER — ESTIMATED BY — DESIGNED BY — DRAFTED BY — CHECKED BY

10935 71

FED ROAD REG. NO.	STATE	CONTRACT NO.	SHEET NO.	TOTAL SHEETS
1	N.Y.	D259214	341	432

BRIDGE REHABILITATION PROJECT (ELEMENT SPECIFIC)
VARIOUS BRIDGES ON INTERSTATE 481
TOWNS OF DEWITT AND CICERO
ONONDAGA COUNTY
P.I.N. 305613 B.I.N. VARIOUS

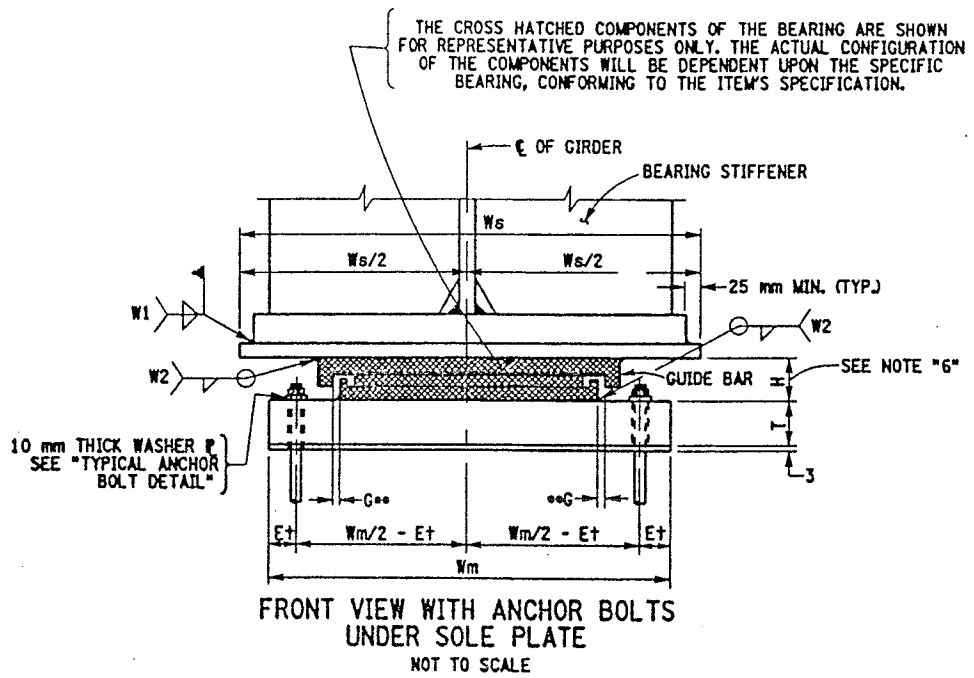

FRONT VIEW WITH ANCHOR BOLTS UNDER SOLE PLATE
NOT TO SCALE

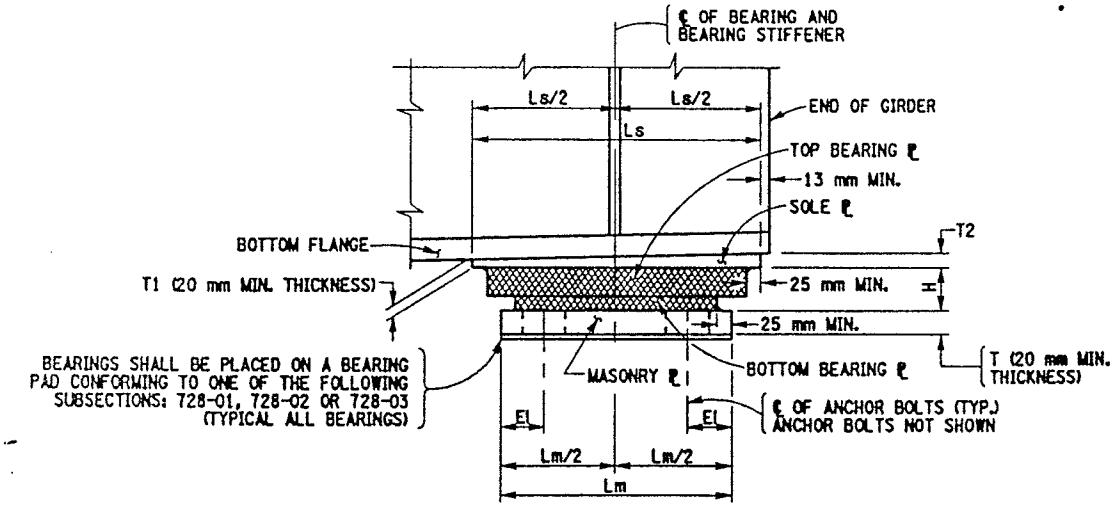

SIDE VIEW AT END OF GIRDER
NOT TO SCALE

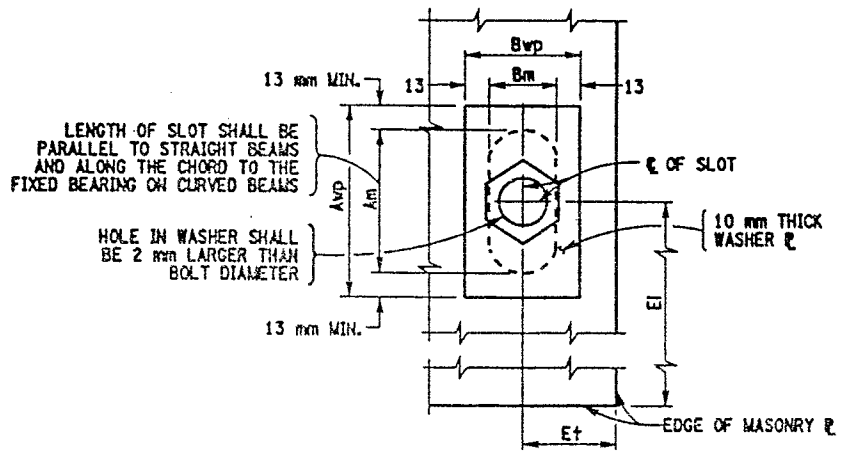

TYPICAL ANCHOR BOLT DETAIL
NOT TO SCALE

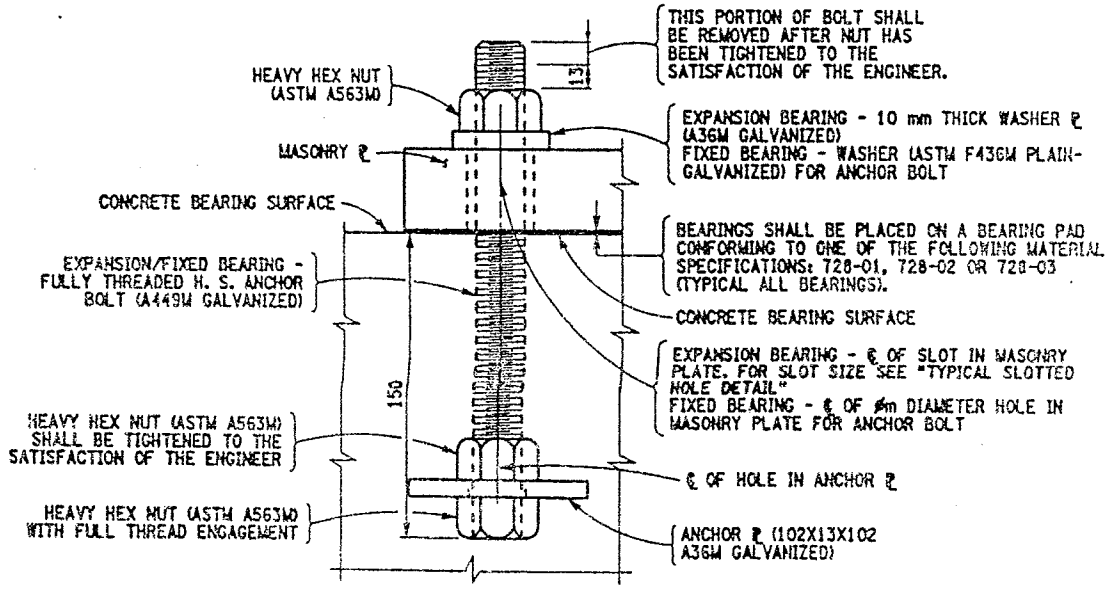

OPTIONAL ANCHOR BOLT DETAIL WITH ANCHOR PLATE ON NEW PEDESTALS
NOT TO SCALE

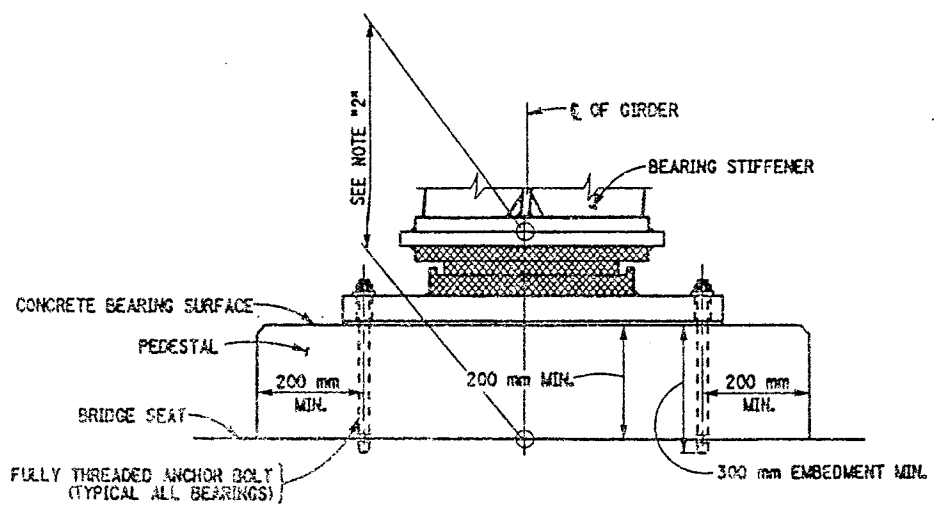

TYPICAL PEDESTAL DETAIL FIXED BEARING SHOWN - EXPANSION BEARING SIMILAR
NOT TO SCALE

NOTES:

THE CONTRACTOR SHALL SUPPLY MULTI-ROTATIONAL STRUCTURAL BRIDGE BEARINGS CONFORMING TO THE REQUIREMENTS OF STANDARD SPECIFICATION SECTION 565 AND SUBJECT TO THE FOLLOWING CONDITIONS:

1. THE BEARING DEVICES SUPPLIED SHALL BE CAPABLE OF TRANSMITTING THE LOADS AND MOVEMENT SHOWN ON THESE PLANS.
2. THE DIMENSION "H" IN THE BEARING TABLE REPRESENTS THE ASSUMED TOTAL HEIGHT OF BEARING MECHANISM BETWEEN THE SOLE PLATE AND MASONRY PLATE USED BY THE DESIGNER TO ESTABLISH THE PEDESTAL ELEVATIONS. THE MINIMUM PEDESTAL HEIGHT SHALL NOT BE CHANGED WITHOUT WRITTEN APPROVAL OF THE DEPUTY CHIEF ENGINEER (STRUCTURES).
3. MASONRY PLATES ARE TO BE DESIGNED. THE MINIMUM CONCRETE EDGE DISTANCE SHALL BE 75 mm AND THE MINIMUM ANCHOR BOLT COVER SHALL BE 200 mm.
4. THE BEARING DEVICE, MASONRY PLATE, SOLE PLATE, ANCHOR BOLTS, NUTS, WASHER PLATES AND BEARING PAD SHALL BE INCLUDED IN THE UNIT PRICE BID FOR THE BEARING ITEMS.
5. ALL EXPANSION BEARINGS SHALL HAVE A MAXIMUM FRICTION COEFFICIENT OF 3%.
6. IF THE ANCHOR BOLTS ARE SET UNDER THE SOLE PLATE, A MINIMUM CLEARANCE EQUAL TO TWO TIMES THE THICKNESS OF ANCHOR NUT PLUS 25 mm SHALL BE MAINTAINED BETWEEN THE TOP OF MASONRY PLATE AND BOTTOM OF THE SOLE PLATE.
7. ALL STEEL SHALL CONFORM TO ASTM A588M.
8. ALL METAL COMPONENTS OF THE BEARING SYSTEM WHICH ARE LIABLE TO COME INTO CONTACT DURING THE TRANSLATION SHALL HAVE A TEFLON SLIDING SURFACE FINISH.
9. ALL STEEL FABRICATION SHALL CONFORM TO THE PROVISIONS OF THE LATEST EDITION OF THE NEW YORK STATE STEEL CONSTRUCTION MANUAL.

WHENEVER JACKING OF THE SUPERSTRUCTURE IS NEEDED TO RESET THE BEARINGS, THE CONTRACTOR SHALL SUBMIT A JACKING SEQUENCE TO THE E.I.C. FOR APPROVAL.

LIST OF ITEMS USED:

ITEM 565.1522M - TYPE M.R. EXPANSION BEARING (1001 TO 2000KN) (EA)
ITEM 565.1722M - TYPE M.R. FIXED BEARING (1001 TO 2000KN) (EA)

*ONE WAY LONGITUDINAL MOVEMENT IS THE MAXIMUM ONE WAY MOVEMENT (EXPANSION OR CONTRACTION) OF THE SUPERSTRUCTURE WHEN BEARINGS ARE SET @ 20°C PLUS 25 MILLIMETERS OF TOLERANCE.

**ON WIDE STRUCTURES AND ON CURVED STRUCTURES PROVISIONS SHALL BE MADE FOR LIMITED LATERAL MOVEMENT.

ALL DIMENSIONS ARE IN m UNLESS OTHERWISE NOTED

AS BUILT REVISIONS

SIGNATURE DATE

MULTI ROTATIONAL BEARINGS

STATE OF NEW YORK
DEPARTMENT OF TRANSPORTATION

FILENAME	REGION	DATE	DRAWING NO.
305613AE.M1A	3	10/02	BR-1

DESIGN SUPERVISOR ____ JOB MANAGER ____ DESIGNED BY ____ DRAFTED BY ____ ESTIMATED BY ____ CHECKED BY ____ CHECKED BY ____

10935 72

FED ROAD REG. NO.	STATE	CONTRACT NO.	SHEET NO.	TOTAL SHEETS
1	N.Y.	D259214	350	432

BRIDGE REHABILITATION PROJECT (ELEMENT SPECIFIC)
VARIOUS BRIDGES ON INTERSTATE 481
TOWNS OF DEWITT AND CICERO
ONONDAGA COUNTY
P.I.N. 305613 | B.I.N. 1093571 & 1093572

DRAFTED BY ____ CHECKED BY ____
ESTIMATED BY ____ DESIGNED BY ____
JOB MANAGER ____
DESIGN SUPERVISOR ____

PIER	SPAN-GIRDER	EXP. BRG. TYPE	SOLE ℄ DIM. "A"
SB-P1	2 - ALL	III	584
SB-P3	4 - 1&4	II	813
SB-P3	4 - 2&3	II	660
SB-P6	7 - 1&4	II	508
SB-P6	7 - 2&3	I	610
SB-P7	8 - 1&4	I	635
SB-P7	8 - 2&3	I	610
SB-P9	10 - ALL	I	660
SB-P10	11 - 1&4	I	635
SB-P10	11 - 2&3	I	610
SB-P11	12 - 1&4	I	635
SB-P11	12 - 2&3	I	610
SB-P13	14 - 1&4	I	635
SB-P13	14 - 2&3	I	610
NB-P1	1 - ALL	III	584
NB-P2	3 - 1&4	III	762
NB-P2	3 - 2&3	III	711
NB-P3	4 - 1&4	II	813
NB-P3	4 - 2&3	II	660
NB-P4	5 - 1&4	II	813
NB-P4	5 - 2&3	II	660
NB-P6	7 - 1&4	II	508
NB-P6	7 - 2&3	II	610
NB-P7	8 - 1&4	II	635
NB-P7	8 - 2&3	I	610
NB-P8	9 - 1&4	I	635
NB-P8	9 - 2&3	I	610
NB-P10	11 - 1&4	I	635
NB-P10	11 - 2&3	I	610
NB-P11	12 - 1&4	I	635
NB-P11	12 - 2&3	I	610

ITEM CLARIFICATION NOTE:

ITEM 589.52NNNNM, REMOVAL OF EXISTING STEEL IS A SERIALIZED ITEM AND THE FOLLOWING PAY ITEMS SHALL BE INCORPORATED BY BRIDGE:
BIN 1093571 SB SHALL USE ITEM 589.520001M
BIN 1093572 NB SHALL USE ITEM 589.520002M

ITEM 571.01NNNNM - THE TREATMENT AND DISPOSAL OF PAINT REMOVAL WASTE IS A SERIALIZED ITEM AND THE FOLLOWING PAY ITEMS SHALL BE INCORPORATED BY BRIDGE:
BIN 1093571 SB SHALL USE ITEM 571.010001M
BIN 1093572 NB SHALL USE ITEM 571.010002M

ITEM 570.10NNNNM - ENVIRONMENTAL GROUND PROTECTION IS A SERIALIZED ITEM AND THE FOLLOWING PAY ITEMS SHALL BE INCORPORATED BY BRIDGE.
BIN 1093571 SB SHALL USE ITEM 570.090001M
BIN 1093572 NB SHALL USE ITEM 570.090002M

ITEM 570.09NNNNM - ENVIRONMENTAL WATER PROTECTION IS A SERIALIZED ITEM AND THE FOLLOWING PAY ITEMS SHALL BE INCORPORATED BY BRIDGE
BIN 1093571 SB SHALL USE ITEM 570.100001M
BIN 1093572 NB SHALL USE ITEM 570.100002M

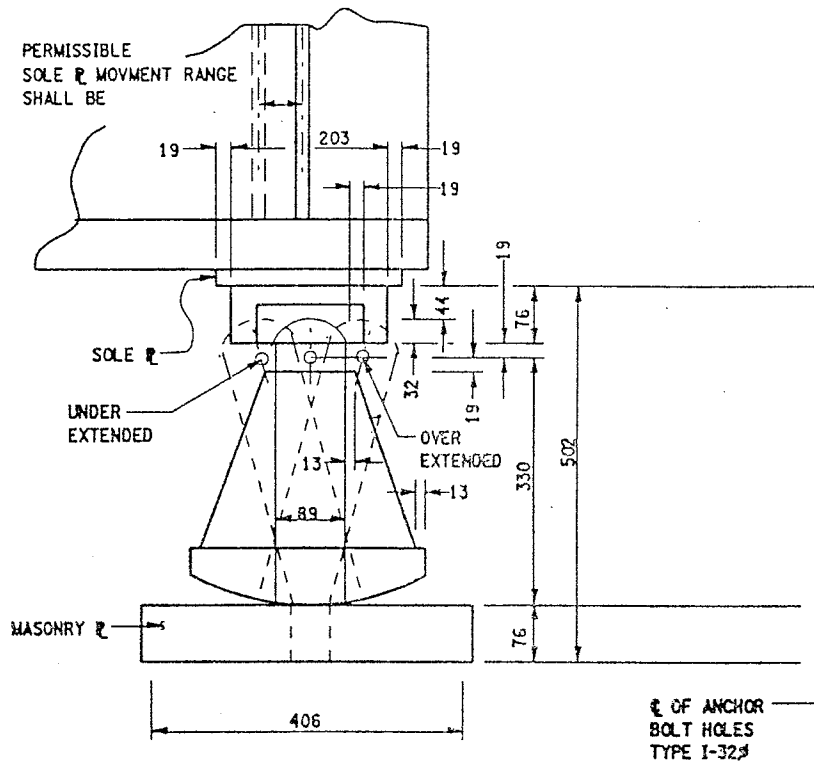

SIDE ELEVATION

NOT TO SCALE

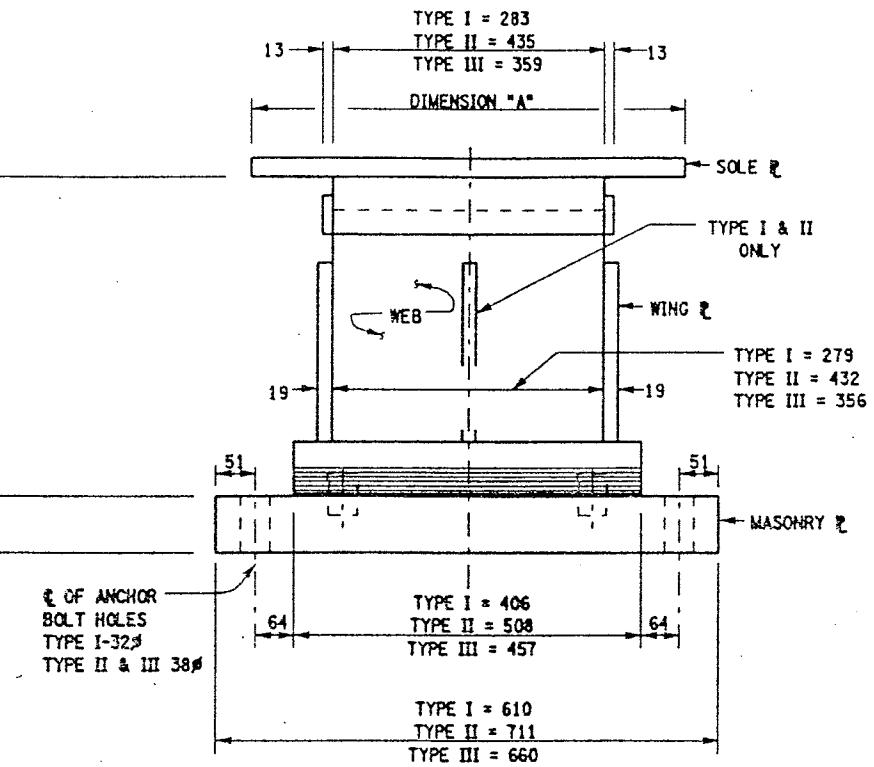

END ELEVATION

NOT TO SCALE

EXISTING HIGH ROCKER EXPANSION BEARING
BIN 1093571 & BIN 1093572

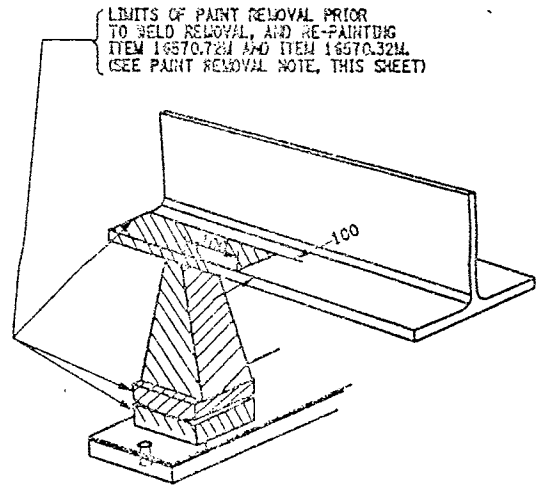

PAINT REMOVAL DETAIL

SCALE: 1 TO 5

PAINT REMOVAL NOTE:

1. IN CONJUNCTION WITH THE USE OF ITEM 16570.32M AND ITEM 16570.76M. ITEM 571.01NNNNM - TREATMENT & DISPOSAL OF PAINT REMOVAL WASTE AND EITHER ITEM 570.10NNNNM - ENVIRONMENTAL GROUND PROTECTION OR ITEM 570.09NNNNM - ENVIRONMENTAL WATER PROTECTION SHALL ALSO BE INCORPORATED DURING THE PAINT REMOVAL OPERATIONS.
2. ALL NEW PARTS INSTALLED AT THIS LOCATION SHALL BE INCLUDED IN THE UNIT PRICE BID FOR ITEM 15565.4302. THE CONTRACTOR WILL BE PAID FOR A QUANTITY OF ONE FOR ALL NEW MATERIALS AT THIS LOCATION.
3. ALL EXISTING SURFACES SHALL BE CLEANED AND LUBRICATED TO ENSURE FREE MOVEMENT, ITEM 15565.4302M.

LIST OF ITEMS USED:

ITEM 571.010001M - TREATMENT AND DISPOSAL OF PAINT REMOVAL WASTE (CM)
ITEM 571.010002M - TREATMENT AND DISPOSAL OF PAINT REMOVAL WASTE (CM)
ITEM 15565.4302M - BRIDGE BEARING RESTORATION (EA)

BRIDGE BEARING RESTORATION NOTES:

1. BRIDGE BEARING RESTORATION ITEM 15565.4302M SHALL INCLUDE ALL DESIGNATED WORK AS PER THE SPECIFICATION.
2. STRUCTURAL LIFTING SHALL BE USED WITH ALL EXPANSION BEARING RESTORATION.
3. IF THE CONTRACTOR ELECTS TO LIFT ONLY ONE GIRDER AT A TIME PER SPAN (TO A MAXIMUM OF 3 mm TO REMOVE LOAD FROM BEARINGS), NO VEHICULAR TRAFFIC RESTRICTIONS WILL BE REQUIRED AS STATED IN SPECIFICATIONS SECTON 585-STRUCTURAL LIFTING OPERATIONS.
4. BEARING RESTORATION SHALL AS A MINIMUM, AND IN ALL CASES INCLUDE REPLACEMENT OF BRONZE PLATE.
5. FIXED BEARING TO BE CLEANED IN PLACE. DO NOT DISASSEMBLE.
6. ON BINS 1093571 & 1093572, BRIDGE BEARING RESTORATION ITEM 15564.4302M FOR THE HIGH ROCKER BEARINGS SHALL INCLUDE ONLY THOSE BEARINGS SHOWN ON DWG BR-11 WHICH ARE EITHER OVER EXTENDED OR UNDER EXTENDED MORE THAN 5° FROM WHAT SHOULD BE ANTICIPATED FOR THE AMBIENT TEMPERATURE. THOSE EXPANSION BEARINGS WHICH ARE BEING RESTORED SHALL BE RESET TO ORIGINAL SPECIFICATIONS.

JACKING NOTES:

THE METHOD OF LIFTING SHALL BE APPROVED BY THE DEPUTY CHEIF ENGINEER (STRUCTURES), DSES, TWO WEEKS PRIOR TO THE START OF THE WORK.

NO LIFTING WILL BE ALLOWED UNTIL ALL TEMPORARY SUPPORTS ARE SECURED.

WHEN POSSIBLE, THERE WILL BE NO LIVE LOAD DURING LIFTING.

LIFTING SHALL BE CONFINED TO ONE END OF A SPAN AT ANY ONE TIME.

IF THE CONTRACTOR ELECTS TO LIFT ONLY ONE GIRDER AT A TIME PER PIER (TO A MAXIMUM OF 3 mm TO REMOVE LOAD FROM BEARING), NO VEHICULAR TRAFFIC RESTRICTIONS WILL BE REQUIRED AS STATED IN THE SPECIFICATION SECTION 585-STRUCTURAL LIFTING OPERATIONS.

ALL DIMENSIONS ARE IN mm UNLESS OTHERWISE NOTED

AS BUILT REVISIONS

SIGNATURE ____ DATE ____

INTERSTATE 481 SB & NB
OVER
CSX RAILROAD

BEARING RESTORATION DETAILS

STATE OF NEW YORK
DEPARTMENT OF TRANSPORTATION

FILENAME	REGION	DATE	DRAWING NO.
305613ZZM1A	3	10/02	BR-10

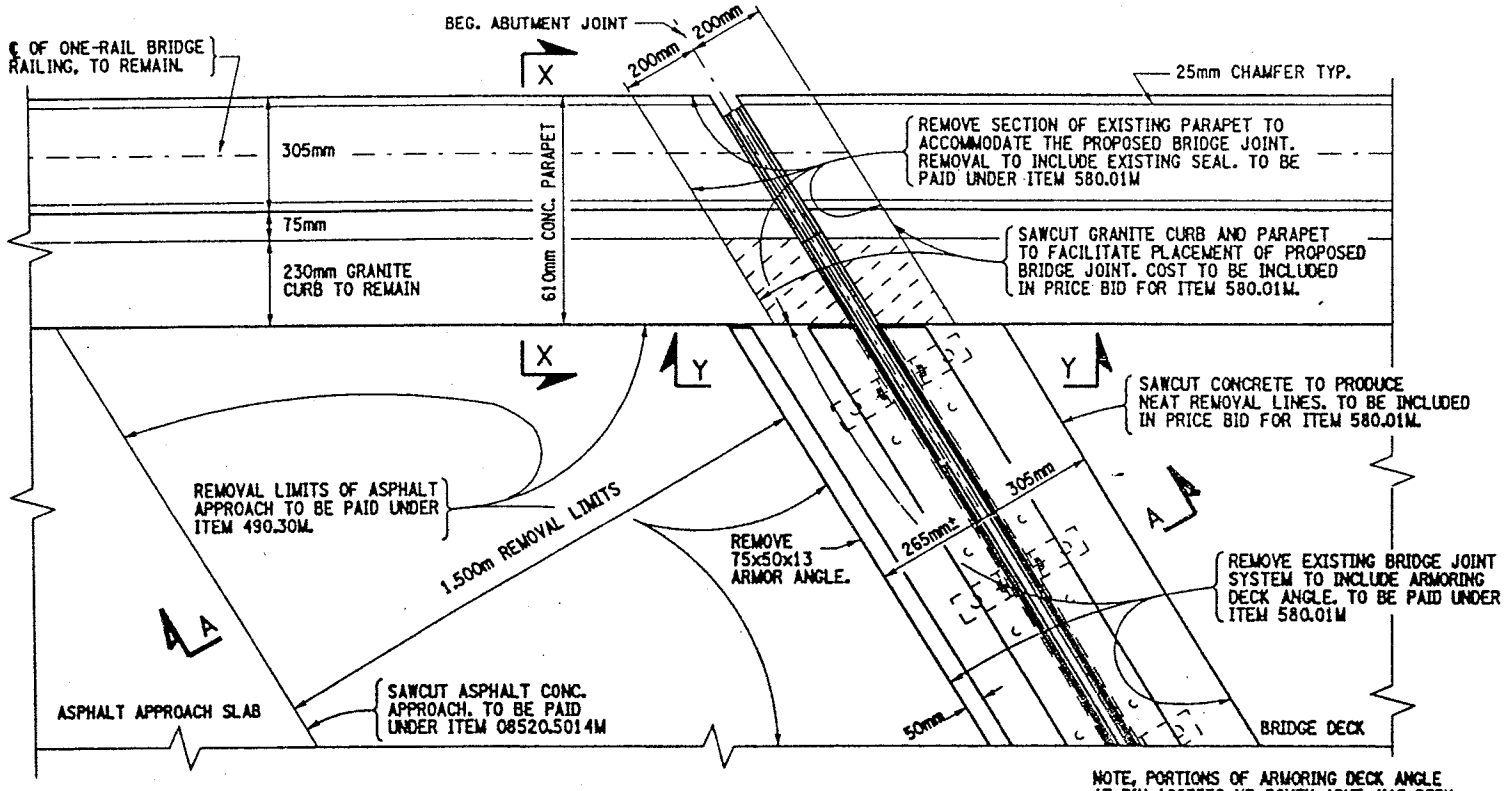

NOTE, PORTIONS OF ARMORING DECK ANGLE AT BIN 1093572 NB SOUTH ABUT. HAS BEEN REMOVED BY STATE MAINT. FORCES.

EXISTING BEG. ABUTMENT JOINT PLAN VIEW

BIN 1093571 - SOUTH ABUT.
BIN 1093572 - SOUTH ABUT.

NOT TO SCALE

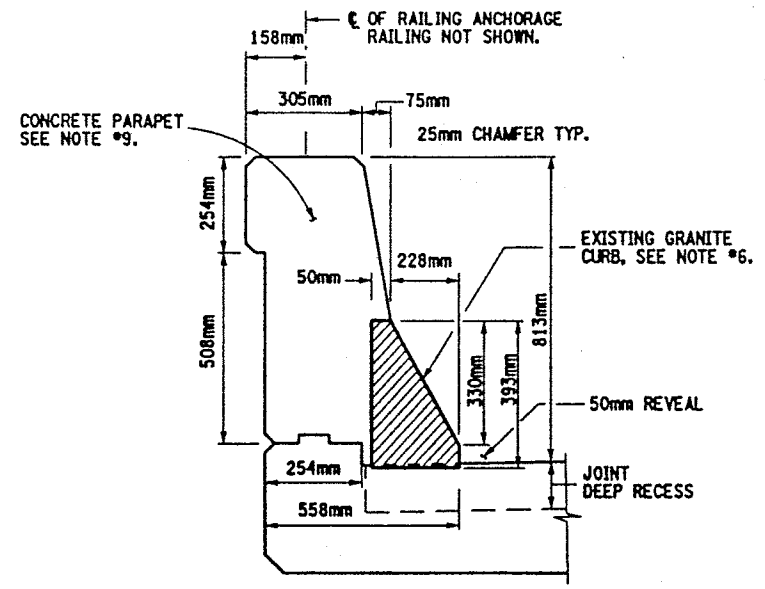

SECTION X-X
PARAPET CONCRETE REMOVAL DETAIL

NOT TO SCALE

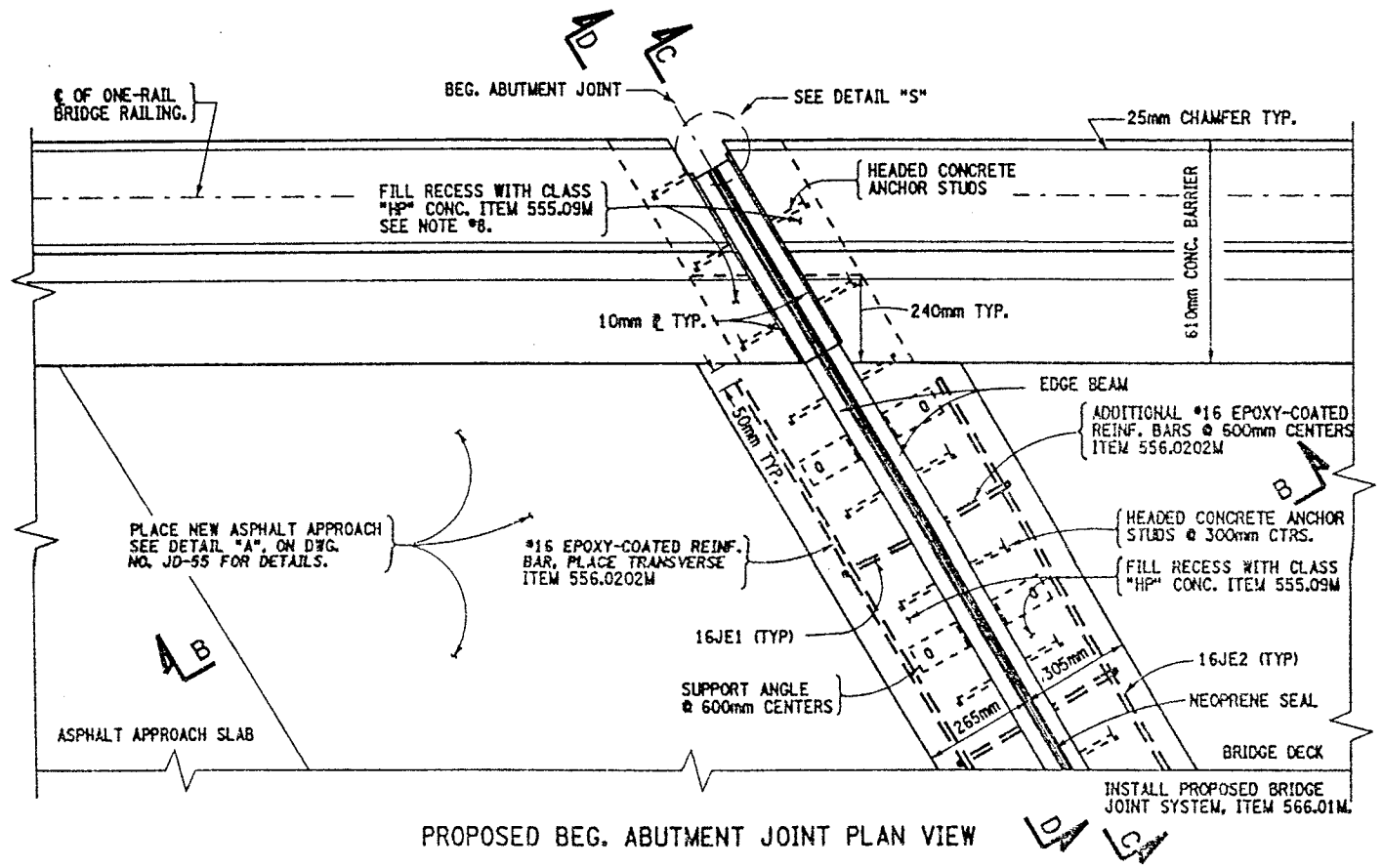

PROPOSED BEG. ABUTMENT JOINT PLAN VIEW

BIN 1093571 - SOUTH ABUT.
BIN 1093572 - SOUTH ABUT.

NOT TO SCALE

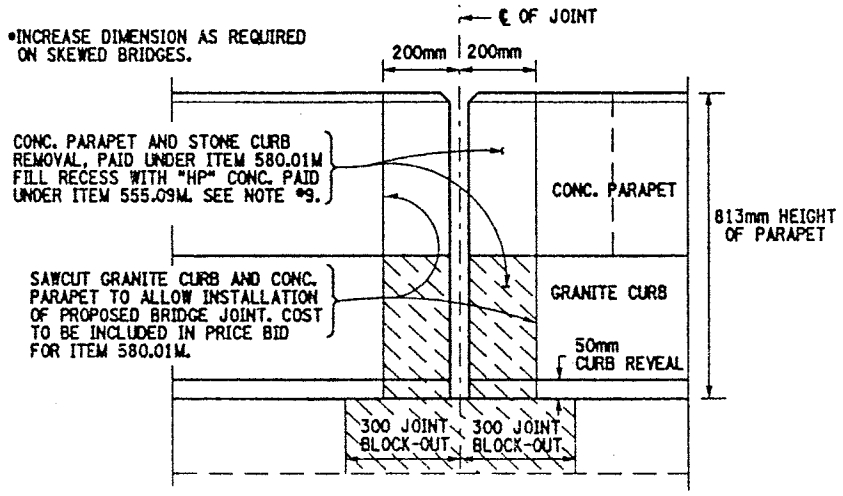

SECTION Y-Y
PARAPET CONCRETE REMOVAL DETAIL

NOT TO SCALE

ITEMS USED:

ITEM 490.30M	-	MISC. COLD MILLING OF BIT. CONC. (SM)
ITEM 08520.5014M	-	SAWCUTTING BIT. CONC. (M)
ITEM 555.09M	-	STRUCT. CONCRETE, CLASS "HP" (CM)
ITEM 556.0202M	-	EPOXY-COATED BAR REINFORCEMENT FOR STRUCT. (Kg)
ITEM 566.01M	-	MODULAR EXP. JOINT SYSTEM ONE-CELL (M)
ITEM 580.01M	-	REMOVAL OF STRUCT. CONCRETE (CM)

FED ROAD REG. NO.	STATE	CONTRACT NO.	SHEET NO.	TOTAL SHEETS
1	N.Y.	D259214	417	432

BRIDGE REHABILITATION PROJECT (ELEMENT SPECIFIC)
VARIOUS BRIDGES ON INTERSTATE 481
TOWNS OF DEWITT AND CICERO
ONONDAGA COUNTY
P.I.N. 305613 | B.I.N. 1093571 & 1093572

NOTES:

1. REMOVAL OF ARMORING DECK ANGLE SHALL BE FROM CURB TO CURB.
2. FOR SECTION VIEWS SEE DWG. NO. JD-55 & JD-56.
3. FOR ADDITIONAL INFORMATION REFER TO DWG. NO. JT-3 & JT-4. ALSO SEE ORIGINAL CONTRACT NUMBER FISH 70-7 AND CONTRACT NUMBER D251436 FOR PREVIOUS WORK.
4. THE EXISTING BRIDGE JOINTS BUTT UP TO PARAPET. THE SEAL THRU THE PARAPET IS PLACED SEPARATE.
5. LEFT SIDE OF DECK SHOWN, RIGHT SIDE IDENTICAL.
6. SAW CUTTING OF CONCRETE AND GRANITE CURB SHALL BE INCLUDED IN PRICE BID FOR ITEM 580.01M.
7. REFER TO DWG. NO. JD-24 FOR ONE-CELL MODULAR JOINT SYSTEM DETAILS AND NOTES.
8. FILL RECESS AT PARAPET WITH CLASS "HP" CONCRETE RESTORE TO ORIGINAL DIMENSIONS.
9. REMOVAL DIMENSIONS AT PARAPETS MAY BE INCREASED TO EMCOMPASS ANY DETERIORATED CONCRETE ADJACENT TO THE JOINT BLOCK-OUT AREA, AOBE.
10. FOR SKEW ANGLES SEE NOTE *8, ON DWG. NO. JD-54.

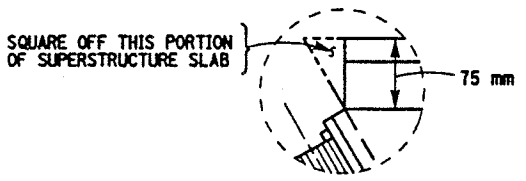

DETAIL "S"

NOT TO SCALE

WORK TO BE DONE:

BIN 1093571 SB

- REMOVE ARMORING DECK ANGLE AND REPLACE BRIDGE JOINT AT BEGINNING ABUTMENT.
- REPAIR CONC. HEADERS AT PIERS 1, 2 & 9.
- CLEAN DRAINAGE SYSTEM AT PIERS 1, 2, 3, 4, 5 & 9.
- REPLACE BRIDGE JOINTS AT PIERS 6, 7, 8, 10, 11, 12, 13 & 14.
- REMOVE ARMORING DECK ANGLE AT END ABUTMENT.

BIN 1093572 NB

- REMOVE ARMORING DECK ANGLE AND REPLACE BRIDGE JOINT AT BEGINNING ABUTMENT.
- REPAIR CONC. HEADERS AT PIERS 1 & 2.
- CLEAN DRAINAGE SYSTEM AT PIERS 1, 2, 3, 4 & 5.
- REPLACE BRIDGE JOINTS AT PIERS 6, 7, 8, 9, 10, 11, 12, 13, & 14.
- REMOVE ARMORING DECK ANGLE AT END ABUTMENT.

ALL DIMENSIONS ARE IN mm UNLESS OTHERWISE NOTED

AS BUILT REVISIONS

SIGNATURE DATE

INTERSTATE 481 SB & NB
OVER
CSX RAILROAD YARD

BRIDGE JOINT DETAILS

STATE OF NEW YORK
DEPARTMENT OF TRANSPORTATION

FILENAME	REGION	DATE	DRAWING NO.
305613AJJA1	3	10/02	JD-53

DESIGN SUPERVISOR — JOB MANAGER — DESIGNED BY — ESTIMATED BY — DRAFTED BY — CHECKED BY

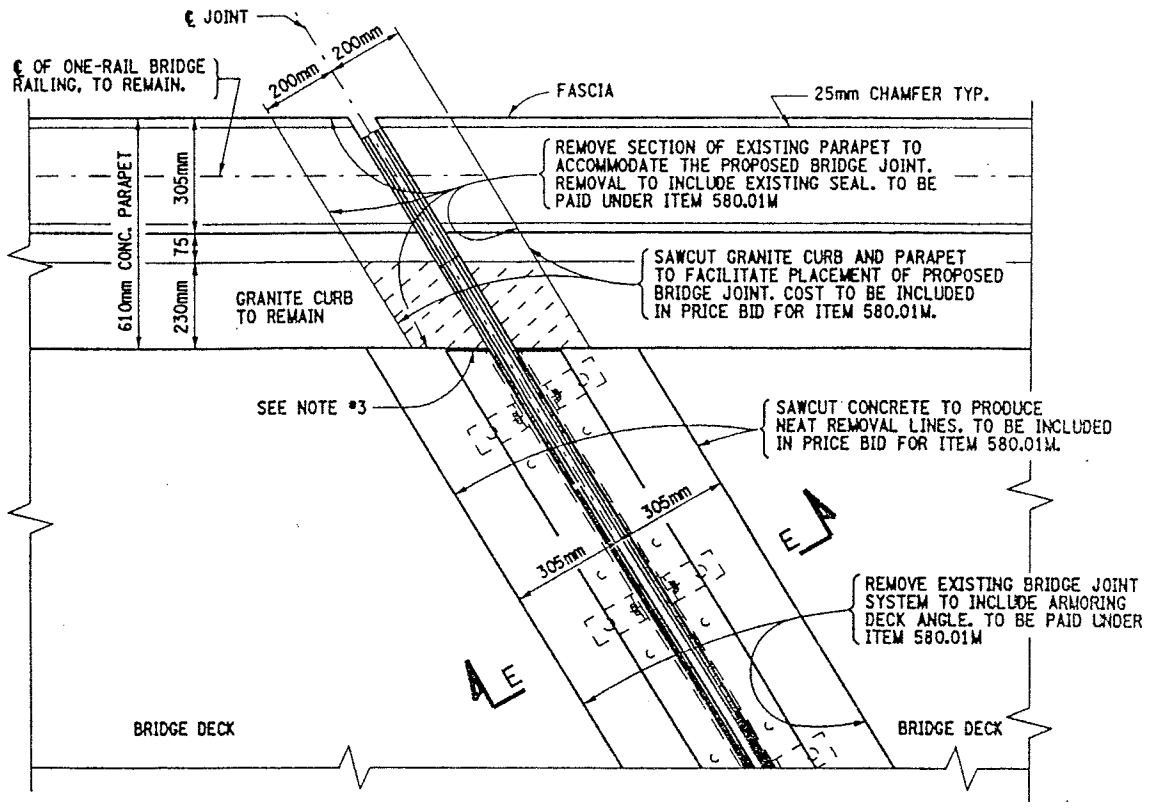

EXISTING PIER JOINT PLAN VIEW

BIN 1093571 - PIERS 6, 7, 8, 10, 11, 12, 13 & 14
BIN 1093572 - PIERS 6, 7, 8, 9, 10, 11, 12, 13 & 14

NOT TO SCALE

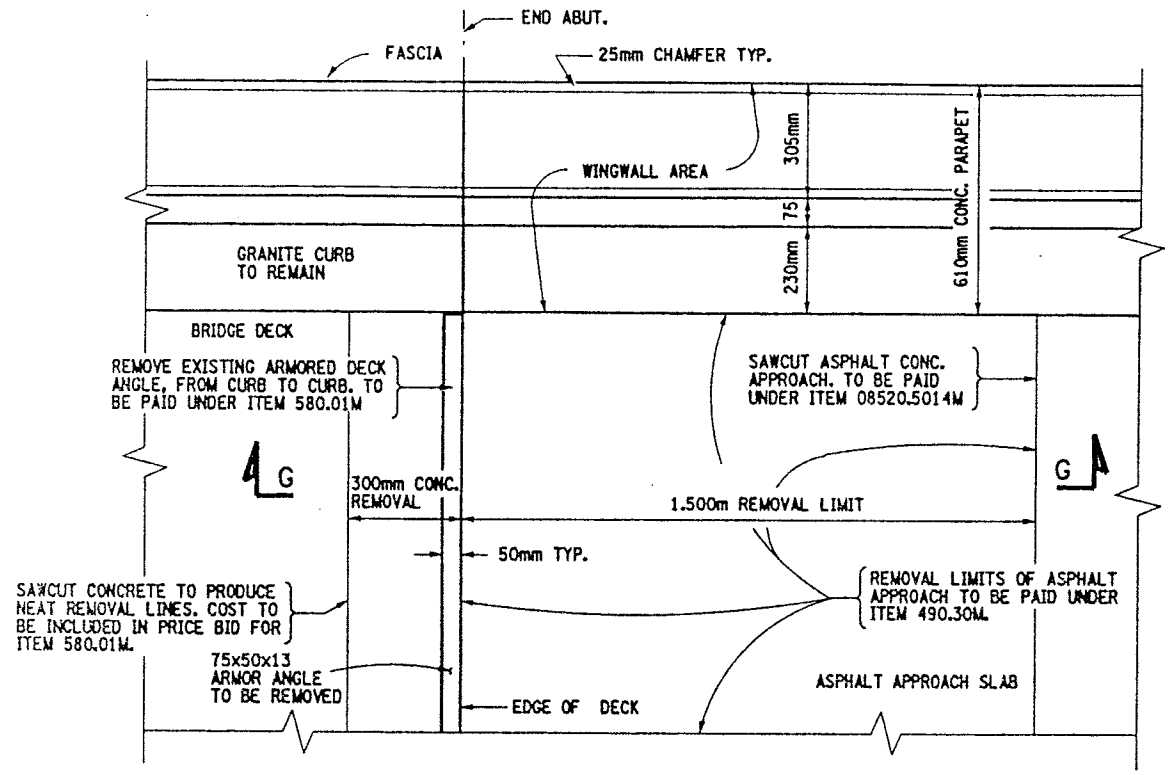

EXISTING END ABUTMENT PLAN VIEW

BIN 1093571 - NORTH ABUTMENT
BIN 1093572 - NORTH ABUTMENT

NOT TO SCALE

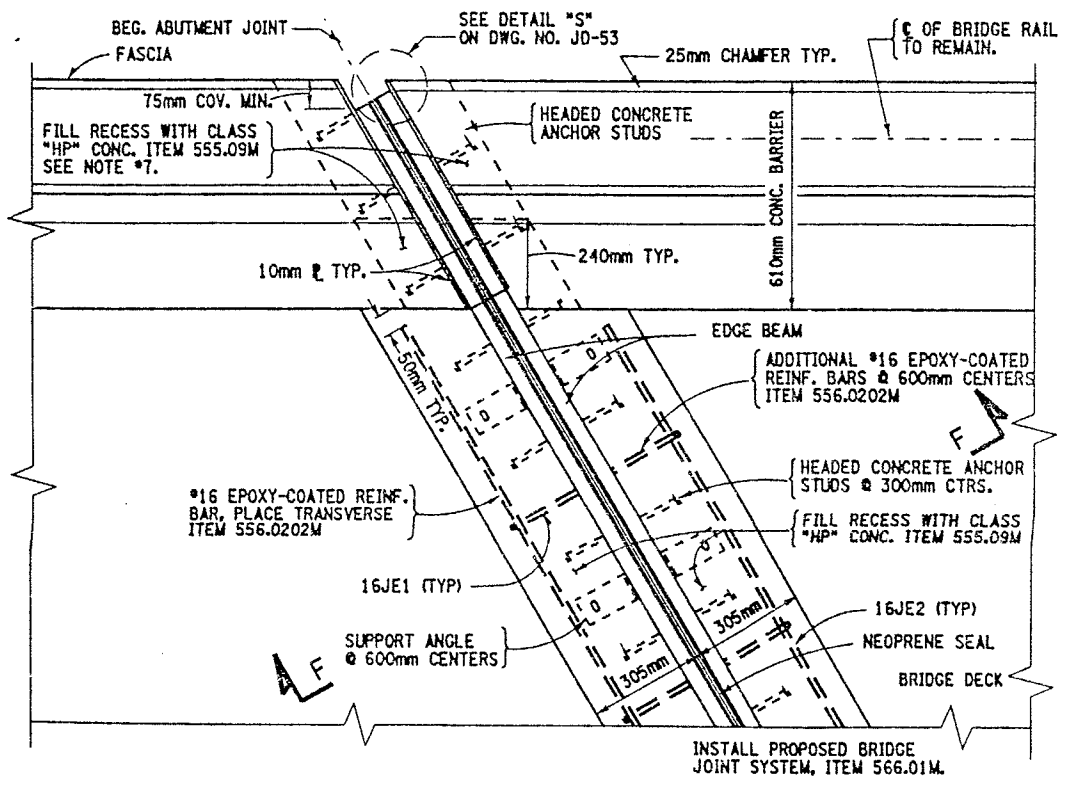

PROPOSED PIER JOINT PLAN VIEW

BIN 1093571 - PIERS 6, 7, 8, 10, 11, 12, 13 & 14
BIN 1093572 - PIERS 6, 7, 8, 9, 10, 11, 12, 13 & 14

NOT TO SCALE

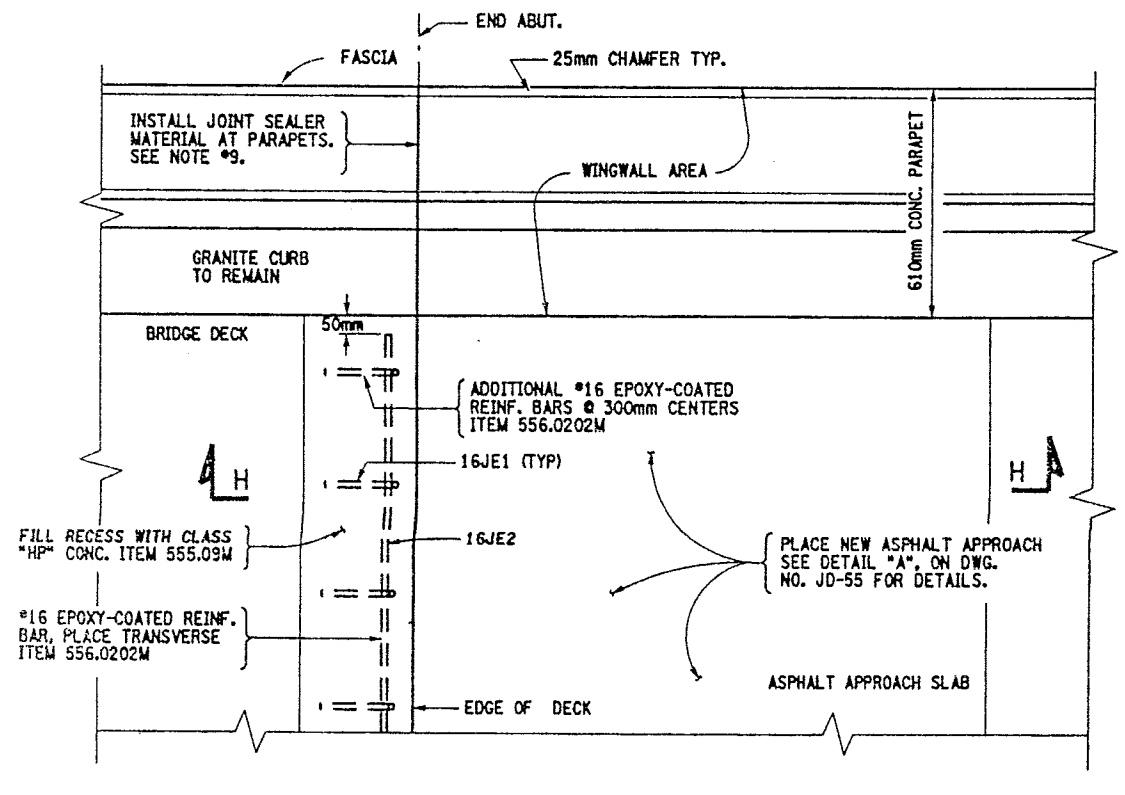

PROPOSED END ABUTMENT PLAN VIEW

BIN 1093571 - NORTH ABUTMENT
BIN 1093572 - NORTH ABUTMENT

NOT TO SCALE

FED ROAD REG. NO.	STATE	CONTRACT NO.	SHEET NO.	TOTAL SHEETS
1	N.Y.	D259214	418	432
BRIDGE REHABILITATION PROJECT (ELEMENT SPECIFIC)				
VARIOUS BRIDGES ON INTERSTATE 481				
TOWNS OF DEWITT AND CICERO				
ONONDAGA COUNTY				
P.I.N. 305613		B.I.N. 1093571 & 1093572		

NOTES:

1. FOR SECTION VIEWS SEE DWG. NO. JD-55 & JD-56.
2. FOR ADDITIONAL INFORMATION REFER TO DWG. NO. JT-3 & JT-4. ALSO SEE ORIGINAL CONTRACT NUMBER FISH 70-7 AND CONTRACT NUMBER D251436 FOR PREVIOUS WORK.
3. THE EXISTING JOINTS AND ARMORING DECK ANGLES BUTT UP TO PARAPET. THE SEAL THRU THE PARAPET IS PLACED SEPARATE.
4. LEFT SIDE OF DECK SHOWN, RIGHT SIDE IDENTICAL.
5. SAW CUTTING OF CONCRETE AND GRANITE CURB SHALL BE INCLUDED IN PRICE BID FOR ITEM 580.01M.
6. REFER TO DWG. NO. JD-24 FOR SINGLE CELL MODULAR JOINT DETAILS AND NOTES.
7. FILL RECESS AT PARAPET WITH CLASS "HP" CONCRETE RESTORE TO ORIGINAL DIMENSIONS.
8. BOTH STRUCTURES HAVE THE FOLLOWING SKEW ANGLES:

   BEGINNING ABUTMENT THROUGH PIER *9 HAVE A SKEW ANGLE OF 8°-43'-42". PIER *10 THROUGH END ABUTMENT HAVE A SKEW ANGLE OF 0°-0'-0".
9. THE INSTALLATION OF NEW JOINT SEALER MATERIAL AT END ABUTMENT PARAPETS SHALL MEET STANDARD SPECIF. 705-06. THE AREA SHALL BE CLEANED PRIOR TO PLACEMENT, TO THE SATISFACTION OF THE ENGINEER. COSTS TO BE INCLUDED IN PRICE BID FOR ITEM 555.09M.

ITEMS USED:

ITEM 490.30M	- MISC. COLD MILLING OF BIT. CONC. (SM)
ITEM 08520.5014M	- SAWCUTTING BIT. CONC. (M)
ITEM 555.09M	- STRUCT. CONCRETE, CLASS "HP" (CM)
ITEM 556.0202M	- EPOXY-COATED BAR REINFORCEMENT FOR STRUCT. (Kg)
ITEM 566.01M	- MODULAR EXP. JOINT SYSTEM ONE-CELL (M)
ITEM 580.01M	- REMOVAL OF STRUCT. CONCRETE (CM)

ALL DIMENSIONS ARE IN mm UNLESS OTHERWISE NOTED

AS BUILT REVISIONS

SIGNATURE DATE

INTERSTATE 481 NB & SB
OVER
CSX RAILROAD YARD

BRIDGE JOINT DETAILS

STATE OF NEW YORK
DEPARTMENT OF TRANSPORTATION

FILENAME	REGION	DATE	DRAWING NO.
305613AJJA1	3	10/02	JD-54

DESIGN SUPERVISOR — JOB MANAGER — ESTIMATED BY — DESIGNED BY — DRAFTED BY — CHECKED BY

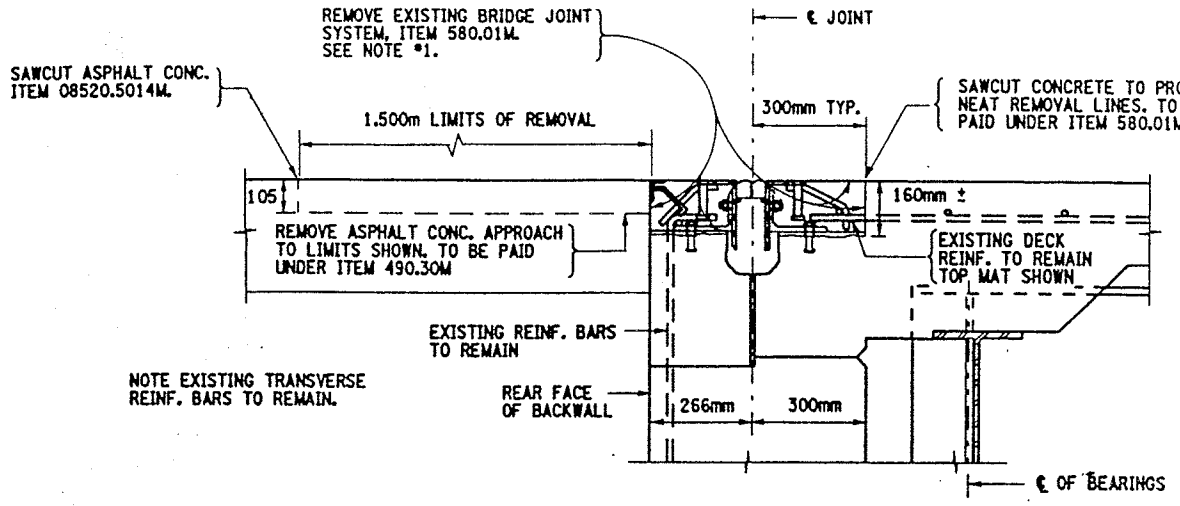

SECTION A-A
EXISTING BEGINNING ABUTMENT JOINT
BIN 1093571 - SOUTH ABUT.
BIN 1093572 - SOUTH ABUT.
NOT TO SCALE

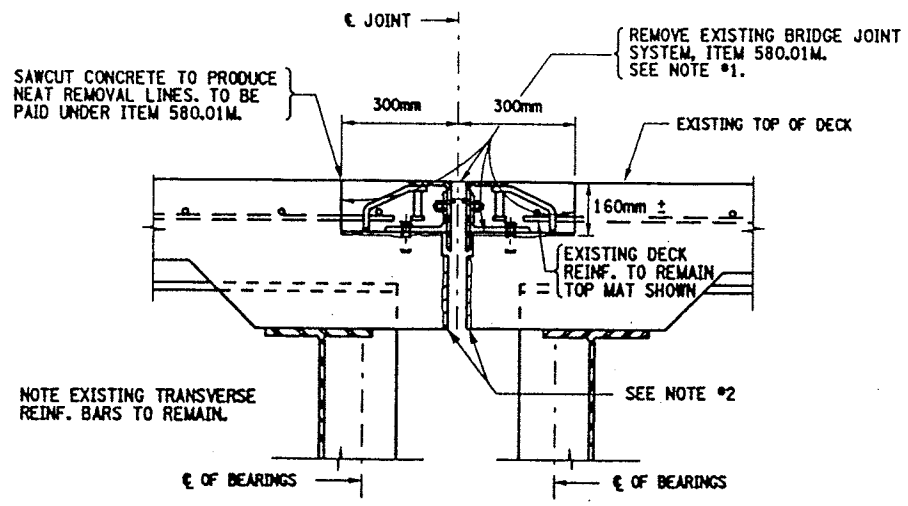

SECTION E-E
EXISTING PIER JOINT TYPICAL
BIN 1093571 - PIERS 6, 7, 8, 10, 11, 12, 13 & 14
BIN 1093572 - PIERS 6, 7, 8, 9, 10, 11, 12, 13 & 14
NOT TO SCALE

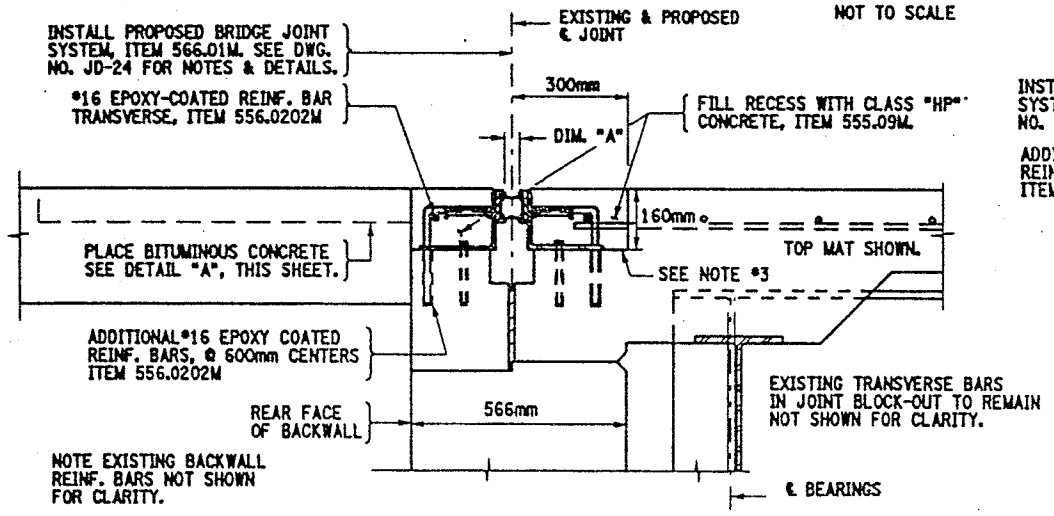

SECTION B-B
PROPOSED BEGINNING ABUTMENT JOINT
BIN 1093571 - SOUTH ABUT.
BIN 1093572 - SOUTH ABUT.
NOT TO SCALE

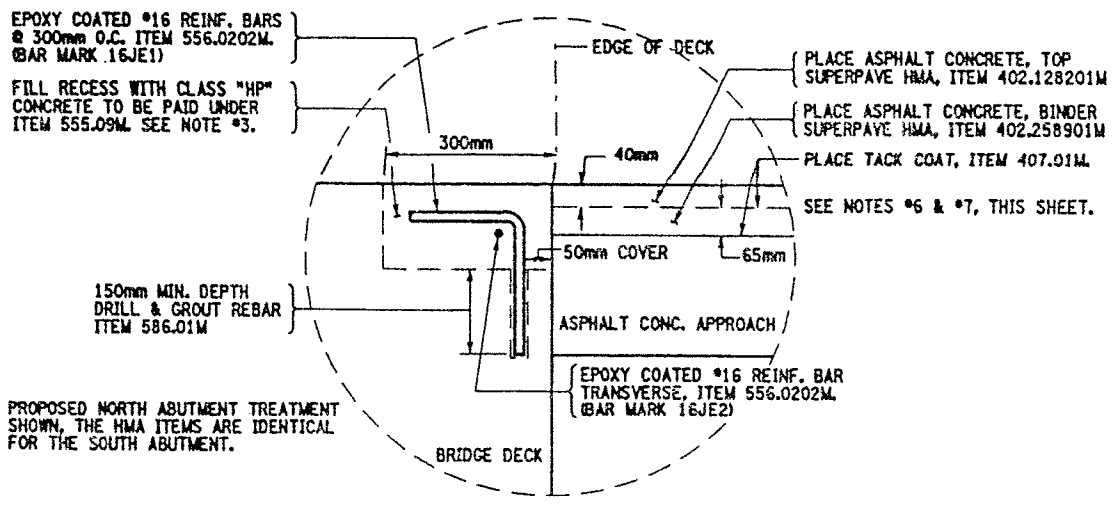

DETAIL "A"
NOT TO SCALE

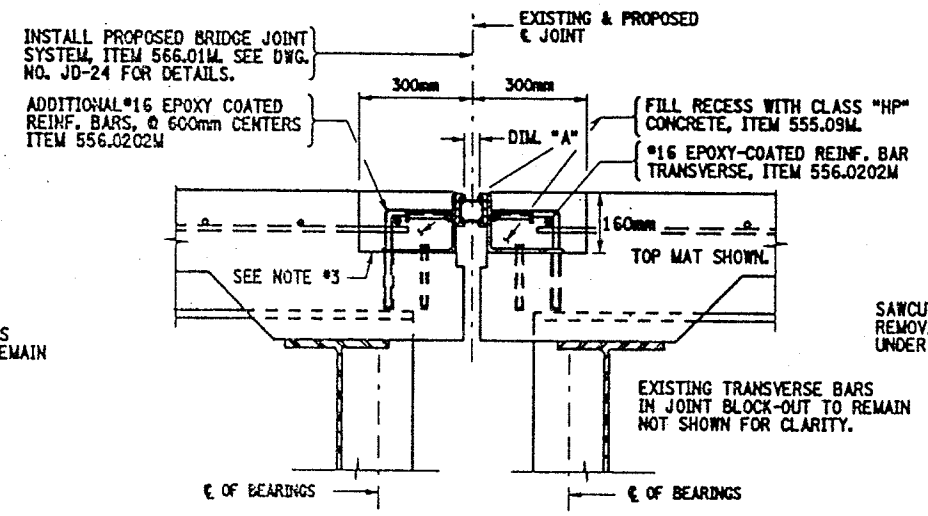

SECTION F-F
PROPOSED PIER JOINT TYPICAL
BIN 1093571 - PIERS 6, 7, 8, 10, 11, 12, 13 & 14
BIN 1093572 - PIERS 6, 7, 8, 9, 10, 11, 12, 13 & 14
NOT TO SCALE

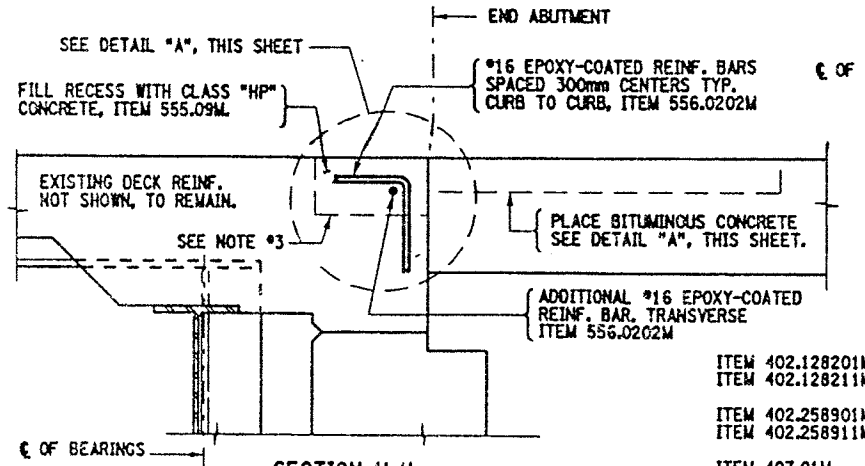

SECTION H-H
PROPOSED END ABUTMENT JOINT
BIN 1093571 - NORTH ABUTMENT
BIN 1093572 - NORTH ABUTMENT
NOT TO SCALE

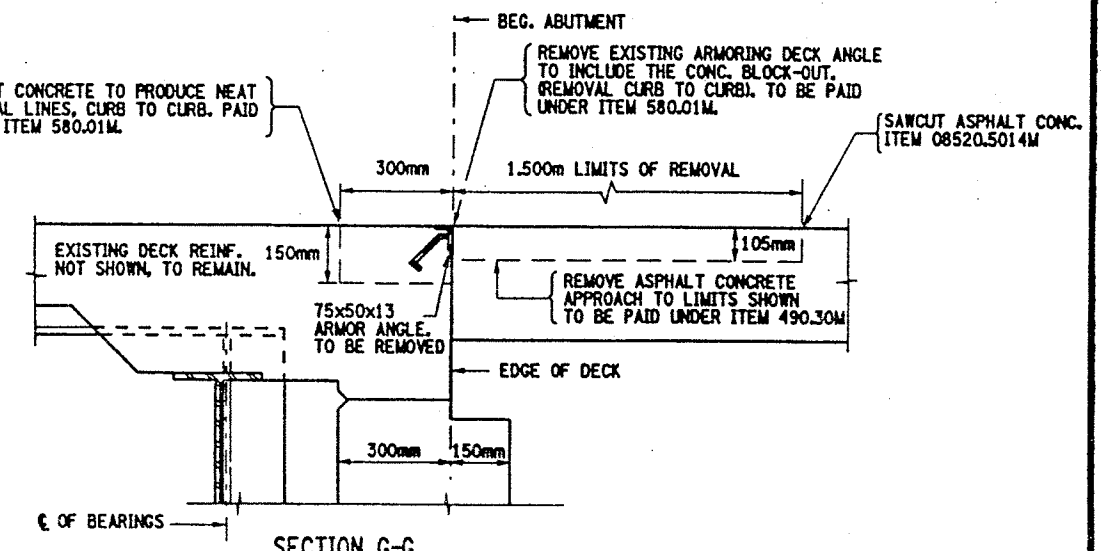

SECTION G-G
EXISTING BEG. ABUTMENT JOINT
BIN 1093571 - NORTH ABUTMENT
BIN 1093572 - NORTH ABUTMENT
NOT TO SCALE

ITEMS USED:

ITEM 402.128201M	- SUPERPAVE HMA F2, 12.5mm (MT)
ITEM 402.128211M	- PLANT PRODUCTION QUALITY ADJUSTMENT TO 402.128201M (QU)
ITEM 402.258901M	- SUPERPAVE HMA F9, 25.0mm (MT)
ITEM 402.258911M	- PLANT PRODUCTION QUALITY ADJUSTMENT TO 402.258901M (QU)
ITEM 407.01M	- TACK COAT (L)
ITEM 490.30M	- MISC. COLD MILL OF BITUMINOUS CONC. (SM)
ITEM 08520.5014M	- SAWCUTTING BIT. CONC. (M)
ITEM 555.09M	- STRUCT. CONCRETE, CLASS "HP" (CM)
ITEM 556.0202M	- EPOXY-COATED BAR REINF. FOR STRUCT. (KG)
ITEM 566.01M	- MOD. EXP. JOINT SYSTEM ONE-CELL (M)
ITEM 580.01M	- REMOVAL OF STRUCT. CONCRETE (CM)
ITEM 586.01M	- DRILL & GROUT REINF. BARS (MM)

FED ROAD REG. NO.	STATE	CONTRACT NO.	SHEET NO.	TOTAL SHEETS
1	N.Y.	D259214	419	432

BRIDGE REHABILITATION PROJECT (ELEMENT SPECIFIC)
VARIOUS BRIDGES ON INTERSTATE 481
TOWNS OF DEWITT AND CICERO
ONONDAGA COUNTY
P.I.N. 305613 | B.I.N. 1093571 & 1093572

NOTES:

1. REMOVAL OF THE EXISTING BRIDGE JOINT SYSTEM TO LIMITS SHOWN OR AS DIRECTED BY ENGINEER. REMOVAL SHALL INCLUDE ANY ARMORING DECK ANGLE AND ANY ADDITIONAL REBAR WHICH IS WELDED TO THE SEGMENT ANGLE AND THE ORIGINAL REINFORCEMENT. COST TO BE INCLUDED IN PRICE BID FOR ITEM 580.01M.
2. REMOVAL OF A PORTION OF THE BRIDGE DECK MAY BE NECESSARY TO ALLOW FOR EXPANSION OF BRIDGE, AOBE. SEE SECTION VIEW ON DWG. NO. JD-24. COST TO BE INCLUDED IN PRICE BID FOR ITEM 580.01M.
3. RECESSES RECEIVING ITEM 555.09M, AFTER SURFACE PREPARATION, THOROUGHLY WET THE CONCRETE SURFACES AND ALL POROUS SURFACES TO BE IN CONTACT WITH NEW CONCRETE FOR 12 HOURS. NOTE, THE USE OF MATERIAL SPECIF. 705-22 PORTLAND CEMENT MORTAR BONDING GROUT HAS BEEN ELIMINATED, (PROJECT PROPOSAL).
4. ACTUAL BRIDGE JOINT BLOCK-OUT DIMENSIONS MAY VARY. REMOVAL LIMITS SHALL BE TO EXISTING BLOCK-OUT LOCATIONS, OR AS DIRECTED BY THE ENGINEER.
5. PROPOSED PARTIAL PLAN VIEWS, SEE DWG. NO. JD-53 & JD-54.
6. ALL SURFACES OF HMA SHALL BE CLEANED AND TACK-COATED PRIOR TO HMA PLACEMENT. ALL COSTS SHALL BE INCLUDED IN THE UNIT PRICE BID FOR ITEM 407.01M.
7. ANY USE OF SUPERPAVE HMA ITEMS SHALL INCLUDE THE APPROPRIATE PLANT PRODUCTION QUALITY ADJUSTMENT ITEMS.

ALL DIMENSIONS ARE IN mm UNLESS OTHERWISE NOTED

AS BUILT REVISIONS

SIGNATURE DATE

INTERSTATE 481 NB & SB
OVER
CSX RAILROAD YARD
BRIDGE JOINT DETAILS

STATE OF NEW YORK
DEPARTMENT OF TRANSPORTATION

FILENAME	REGION	DATE	DRAWING NO.
305613AJJA1	3	10/02	JD-55

CHECKED BY
DRAFTED BY
ESTIMATED BY
CHECKED BY
DESIGNED BY
JOB MANAGER
DESIGN SUPERVISOR

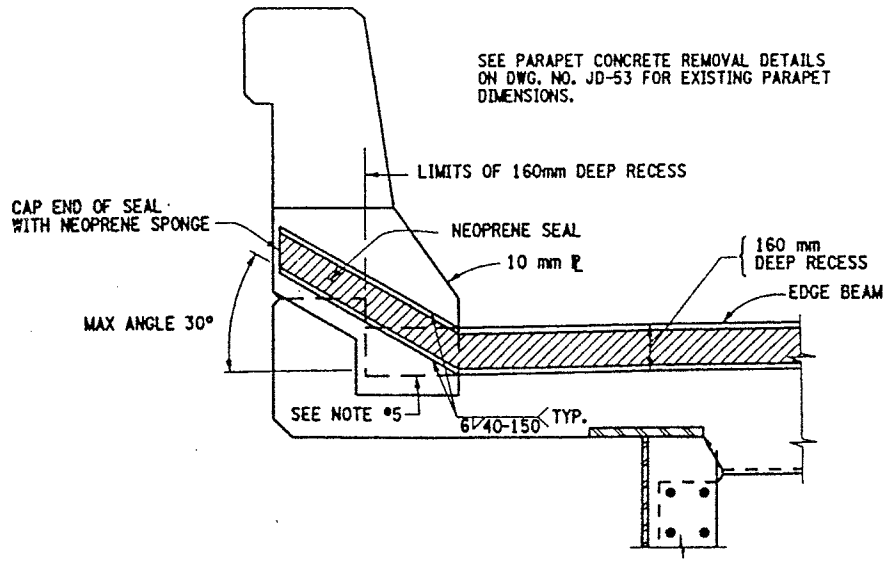

PROPOSED SEAL PLACEMENT TYPICAL
SECTION C-C (CONCRETE TRAFFIC BARRIER)

NOT TO SCALE

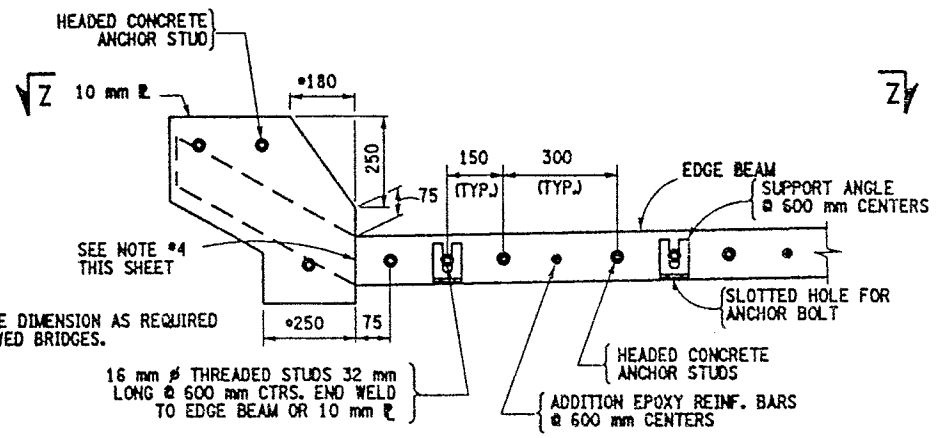

PROPOSED STEEL PLATE TYPICAL
SECTION D-D (CONCRETE TRAFFIC BARRIER)

(ONLY THE STEEL SHOWN)

NOT TO SCALE

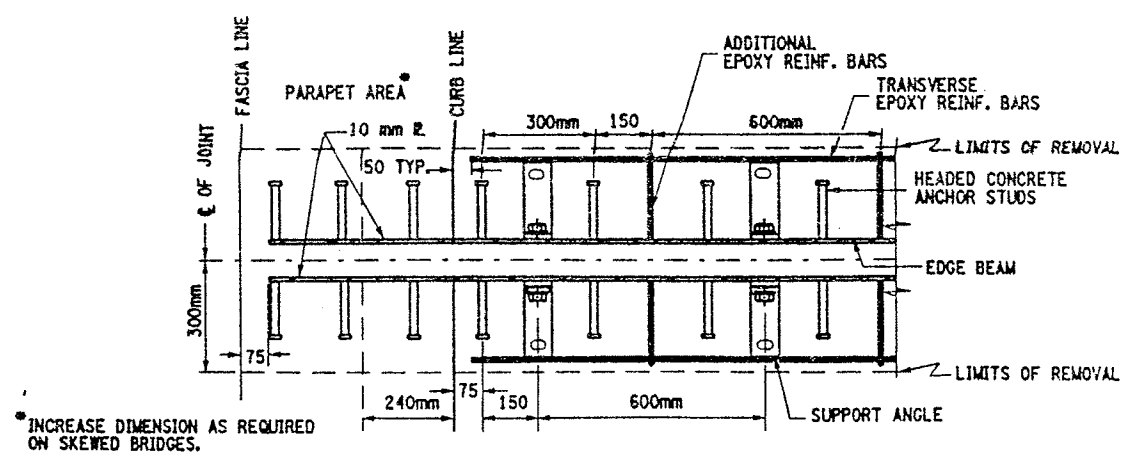

PLAN VIEW OF STEEL ℄ SECTION Z-Z
TYPICAL SPACING FOR SINGLE CELL

NOT TO SCALE

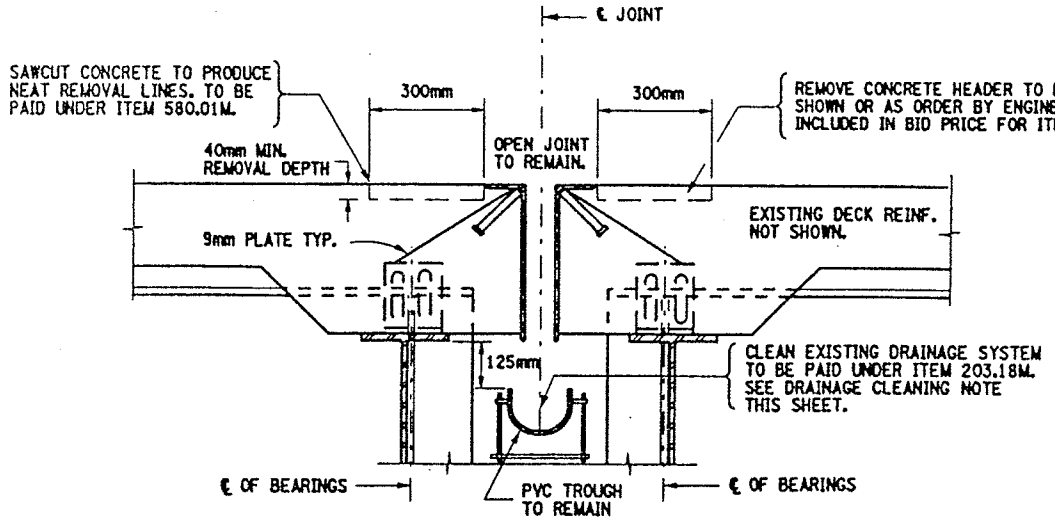

EXISTING OPEN JOINT AT PIERS
(REPAIRS TO OPEN JOINT HEADERS)

BIN 1093571 - PIERS 1, 2, & 9
BIN 1093572 - PIERS 1 & 2

NOT TO SCALE

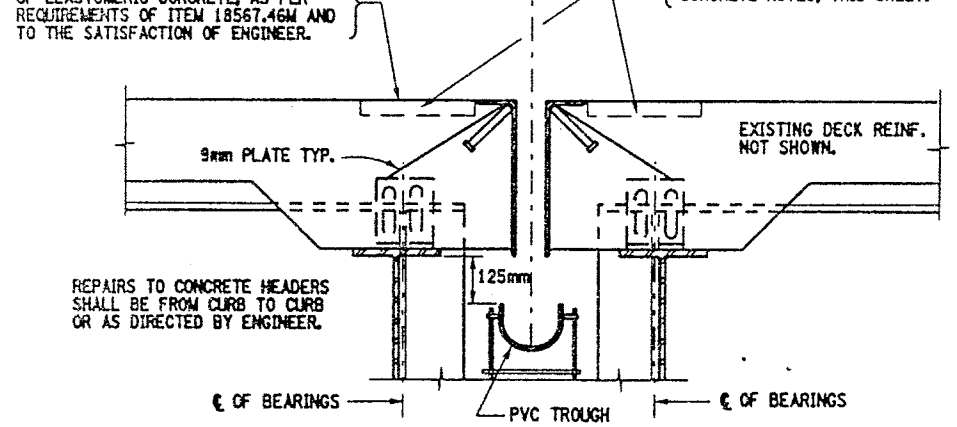

PROPOSED OPEN JOINT AT PIERS
(REPAIRS TO OPEN JOINT HEADERS)

BIN 1093571 - PIERS 1, 2, & 9
BIN 1093572 - PIERS 1 & 2

NOT TO SCALE

ITEMS USED:

ITEM 203.18M - CLEAN CLOSED DRAINAGE SYSTEMS (M)
ITEM 18567.46M - ELASTOMERIC CONCRETE FOR BRIDGE JOINT SYSTEMS (M)
ITEM 580.01M - REMOVAL OF STRUCT. CONCRETE (CM)

FED ROAD REG. NO.	STATE	CONTRACT NO.	SHEET NO.	TOTAL SHEETS
1	N.Y.	D259214	420	432

BRIDGE REHABILITATION PROJECT (ELEMENT SPECIFIC)
VARIOUS BRIDGES ON INTERSTATE 481
TOWNS OF DEWITT AND CICERO
ONONDAGA COUNTY
P.I.N. 305613 | B.I.N. 1093571 & 1093572

NOTES:

1. ALL NOTES & DETAILS ON DWG. NO. JD-24 SHALL APPLY.
2. REFER TO DWG. NO. JD-53 & JD-54 FOR PROPOSED PARTIAL PLAN VIEWS.
3. FOR CALCULATION OF "J" DIMENSION REFER TO DWG. NO. JD-24.
4. ALL WELDS SHALL BE GROUND SMOOTH TO THE SATISFACTION OF THE ENGINEER, ON SEAL CONTACT SIDE OF EDGE BEAM.
5. RECESSES RECEIVING ITEM 555.09M, AFTER SURFACE PREPARATION, THOROUGHLY WET THE CONCRETE SURFACES AND ALL POROUS SURFACES TO BE IN CONTACT WITH NEW CONCRETE FOR 12 HOURS. NOTE, THE USE OF MATERIAL SPECIF. 705-22 PORTLAND CEMENT MORTAR BONDING GROUT HAS BEEN ELIMINATED, (PROJECT PROPOSAL).

CLEAN DRAINAGE SYSTEM NOTE:

THE FOLLOWING CLOSED DRAINAGE SYSTEMS SHALL BE CLEANED UNDER THIS CONTRACT.

BIN 1093571 - PIERS 1, 2, 3, 4, 5, & 9
BIN 1093572 - PIERS 1, 2, 3, 4, 5 & 6

NOTE, AT PIER #6 THE TYPE OF BRIDGE JOINT IS AN ARMORED JOINT WITH COMPRESSION SEAL. THE DOWNSPOUTS ARE CONNECTED TO THE BRIDGE SCUPPERS.

THE CLEANING OF THE EXISTING DRAINAGE SYSTEM (ITEM 203.18M) SHALL BE FROM HOPPER (FASCIA GIRDER) TO HOPPER (FASCIA GIRDER) AND SHALL INCLUDE THE PVC TROUGH AND THE ENTIRE DOWNSPOUT SYSTEM (DIA. OF DOWNSPOUTS VARY) FROM HOPPERS TO OUTLET. REFER TO DWG. NO. DD17-1 THRU DWG. NO. DD17-4 FOR DRAINAGE DETAILS AND PROPOSED MODIFICATIONS TO PIER DOWNSPOUTS.

FOR ESTIMATING THE QUANTITY FOR ITEM 203.18M. THE FOLLOWING INFORMATION IS ASSUMED:

BIN 1093571 - PIERS 1, 2, 3, 4, 5, & 9
(256 METERS TOTAL)

BIN 1093572 - PIERS 1, 2, 3, 4.5 & 6
(269 METERS TOTAL)

CONTRACTOR SHALL TAKE CARE WHEN PERFORMING CLEANING OPERATION NOT TO DAMAGE THE EXISTING DRAINAGE SYSTEM. ANY DAMAGE CAUSED BY CONTRACTOR'S OPERATIONS SHALL BE REPAIRED OR REPLACED AS DEEMED NECESSARY BY THE ENGINEER AT NO ADDITIONAL COST TO THE STATE.

ELASTOMERIC CONCRETE NOTE:

1. AN EXPERIENCED TECHNICAL REPRESENTATIVE EMPLOYED BY THE MANUFACTURER OF THE ELASTOMERIC CONCRETE SHALL BE PRESENT DURING ALL PHASES OF SUBSTRATE PREPARATION AND MATERIAL PLACEMENT.
2. THE WATERTIGHT INTEGRITY TEST SHALL NOT BE REQUIRED FOR THE OPEN JOINT HEADER REPAIRS, WHERE ELASTOMERIC CONCRETE (ITEM 18567.46M) IS USED, FOR THESE TWO STRUCTURES ONLY.
3. THE REMOVAL DIMENSIONS MAY BE ADJUSTED TO ENSURE THAT ALL DETERIORATED CONCRETE ADJACENT TO THE JOINT AREA IS ENCOMPASS, AOBE.

ALL DIMENSIONS ARE IN mm UNLESS OTHERWISE NOTED

AS BUILT REVISIONS

SIGNATURE _____ DATE _____

INTERSTATE 481 NB & SB
OVER
CSX RAILROAD YARD

BRIDGE JOINT DETAILS

STATE OF NEW YORK
DEPARTMENT OF TRANSPORTATION

FILENAME	REGION	DATE	DRAWING NO.
305613AJJA1	3	10/02	JD-56

DESIGN SUPERVISOR ____ JOB MANAGER ____ DESIGNED BY ____ CHECKED BY ____ DRAFTED BY ____ ESTIMATED BY ____

BIN:1093572
I481 NB / CSX TRANS/AMTRAK
Span 1 of 15

TOP OF DECK DETERIORATION SKETCH

NOT TO SCALE

DATE: 03/24/2014

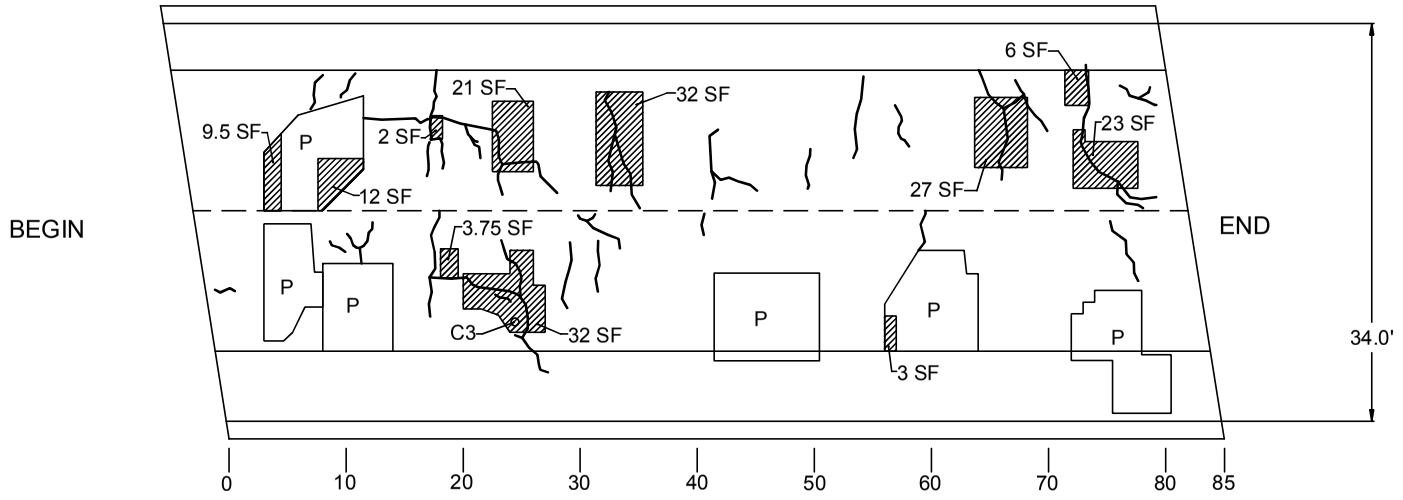

TOTAL DAMAGED AREA EQUALS 171.25 SF WHICH IS 5.9% OF DECK SURFACE

LEGEND	
P Patch	Crack
Hollow Concrete	Core Location

BIN:1093572
I481 NB / CSX TRANS/AMTRAK
Span 2 of 15

TOP OF DECK DETERIORATION SKETCH

NOT TO SCALE

DATE: 03/24/2014

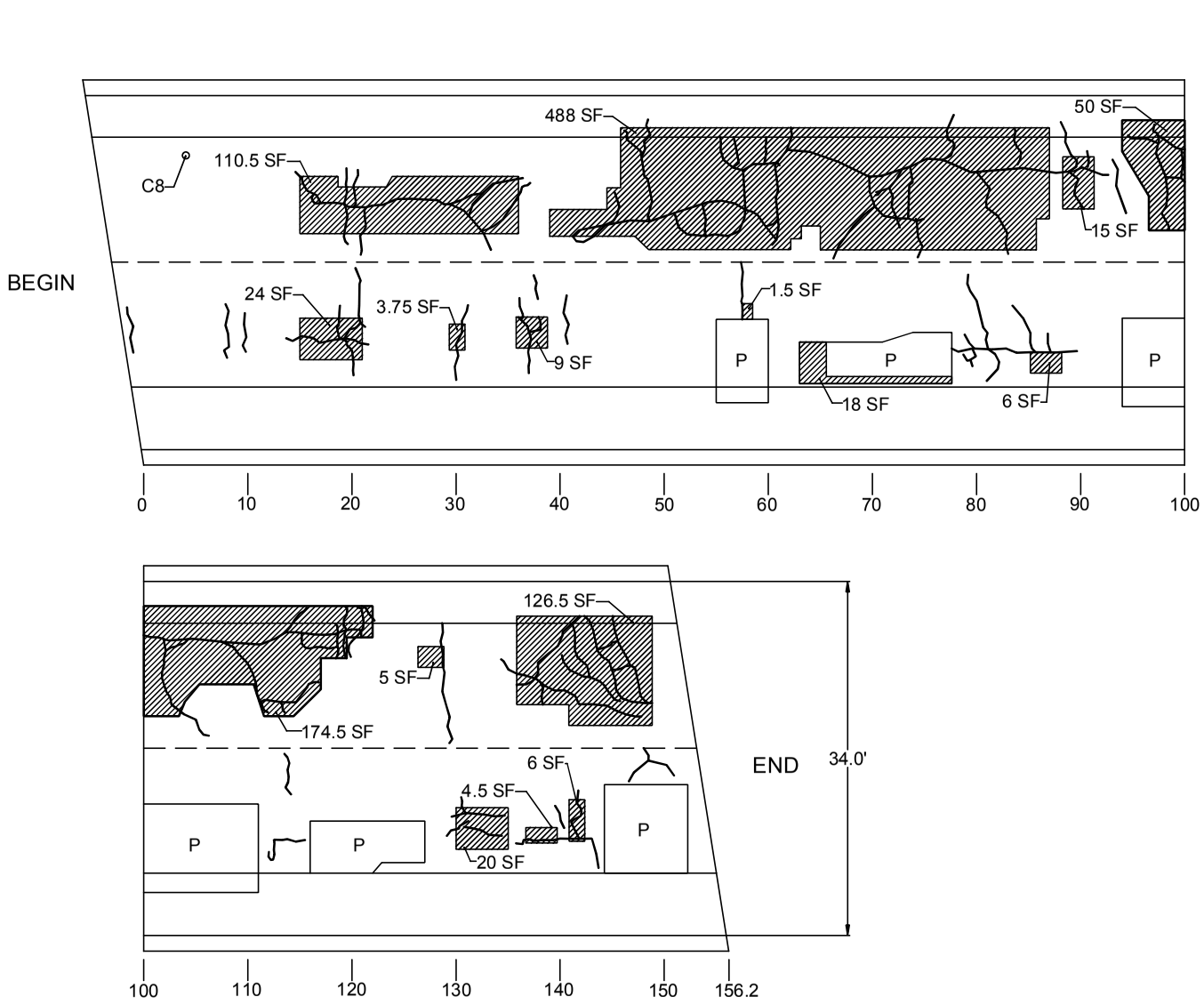

TOTAL DAMAGED AREA EQUALS 1113.25 SF WHICH IS 21% OF DECK SURFACE

LEGEND			
Hollow Concrete		Crack	
Core Location		P	Patch

BIN:1093572
I481 NB / CSX TRANS/AMTRAK
Span 3 of 15

TOP OF DECK DETERIORATION SKETCH

NOT TO SCALE

DATE: 03/24/2014

N

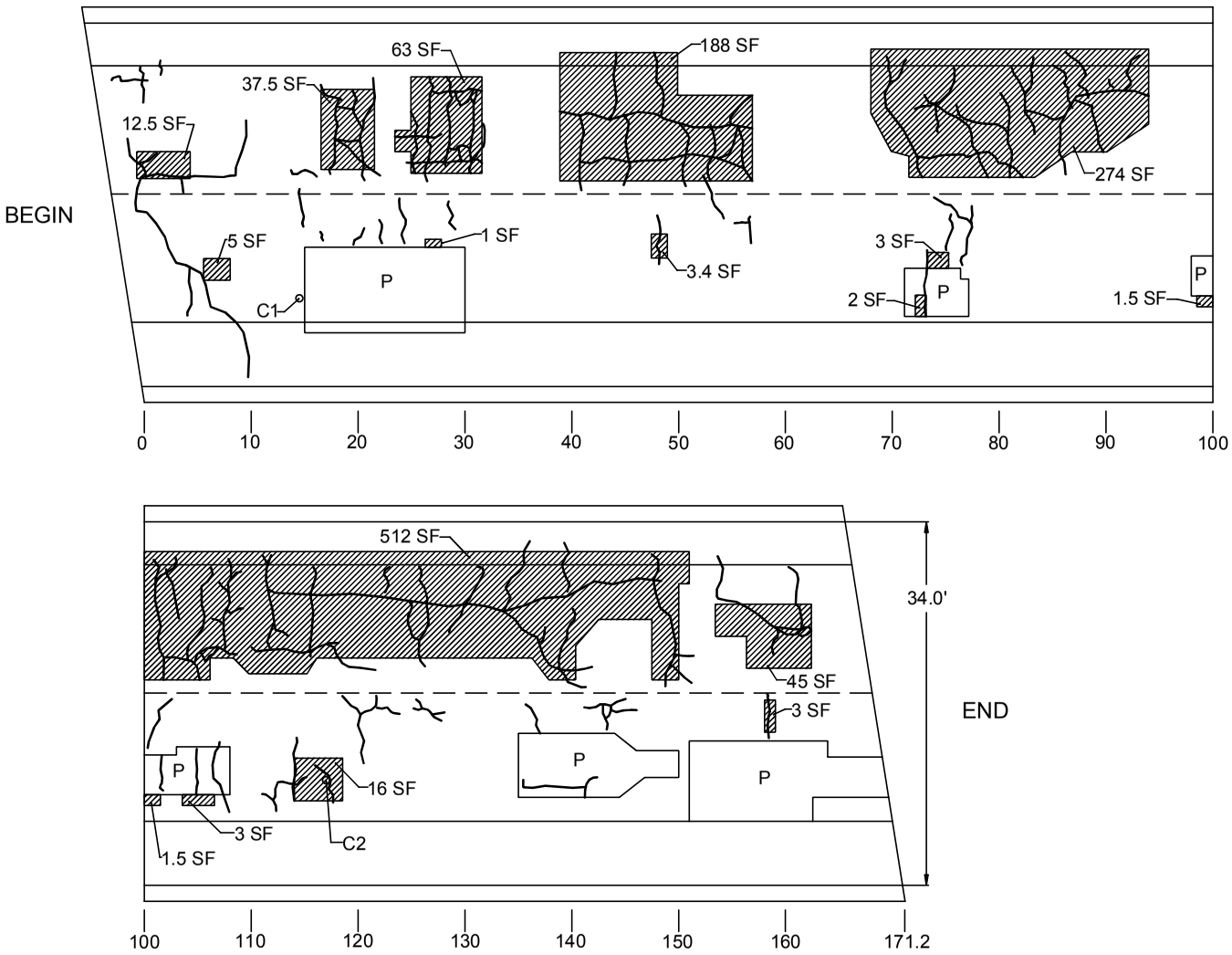

TOTAL DAMAGED AREA EQUALS 1179 SF WHICH IS 20.3% OF DECK SURFACE

LEGEND

Hollow Concrete	Crack
Core Location	P Patch

BIN:1093572
I481 NB / CSX TRANS/AMTRAK
Span 4 of 15

TOP OF DECK DETERIORATION SKETCH

NOT TO SCALE

DATE: 03/24/2014

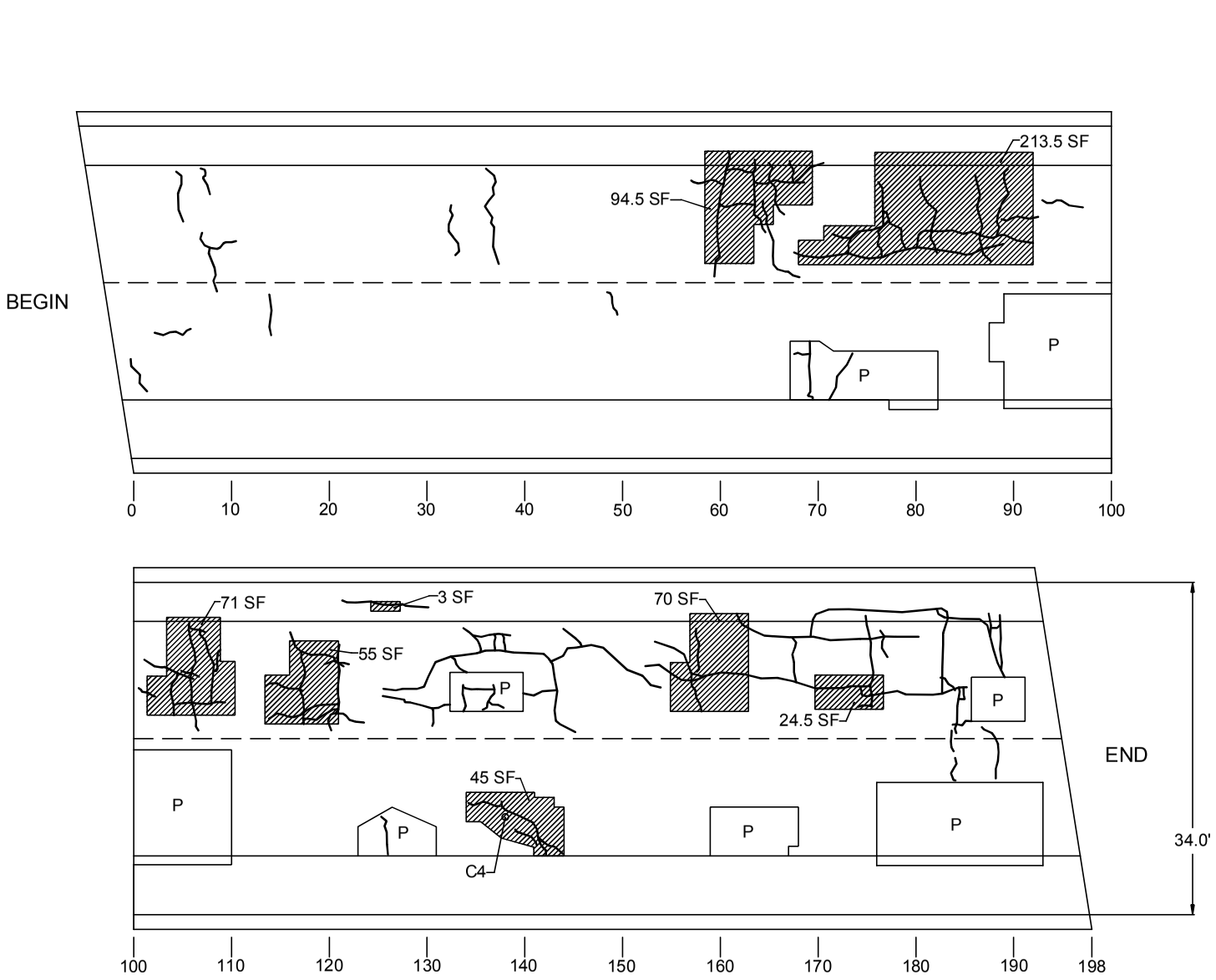

TOTAL DAMAGED AREA EQUALS 576.5 SF WHICH IS 8.6% OF DECK SURFACE

LEGEND

Hollow Concrete | P Patch | Crack | Core Location

BIN:1093572
I481 NB / CSX TRANS/AMTRAK
Span 5 of 15

TOP OF DECK DETERIORATION SKETCH

NOT TO SCALE

DATE: 03/24/2014

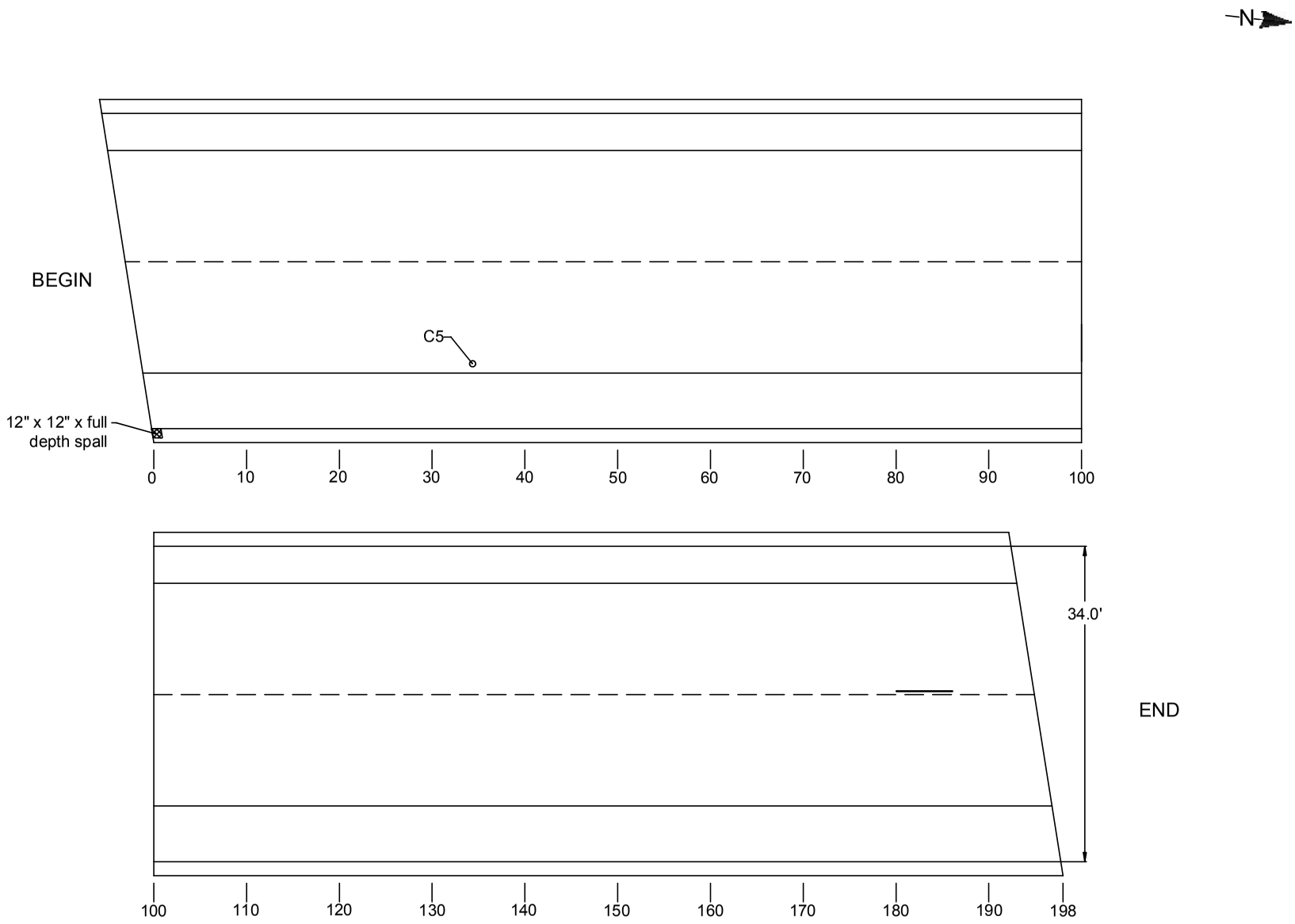

TOTAL DAMAGED AREA EQUALS 1 SF WHICH IS 0.1% OF DECK SURFACE

LEGEND

Spall Crack Core Location

BIN:1093572
I481 NB / CSX TRANS/AMTRAK
Span 6 of 15

TOP OF DECK DETERIORATION SKETCH

NOT TO SCALE

DATE: 03/24/2014

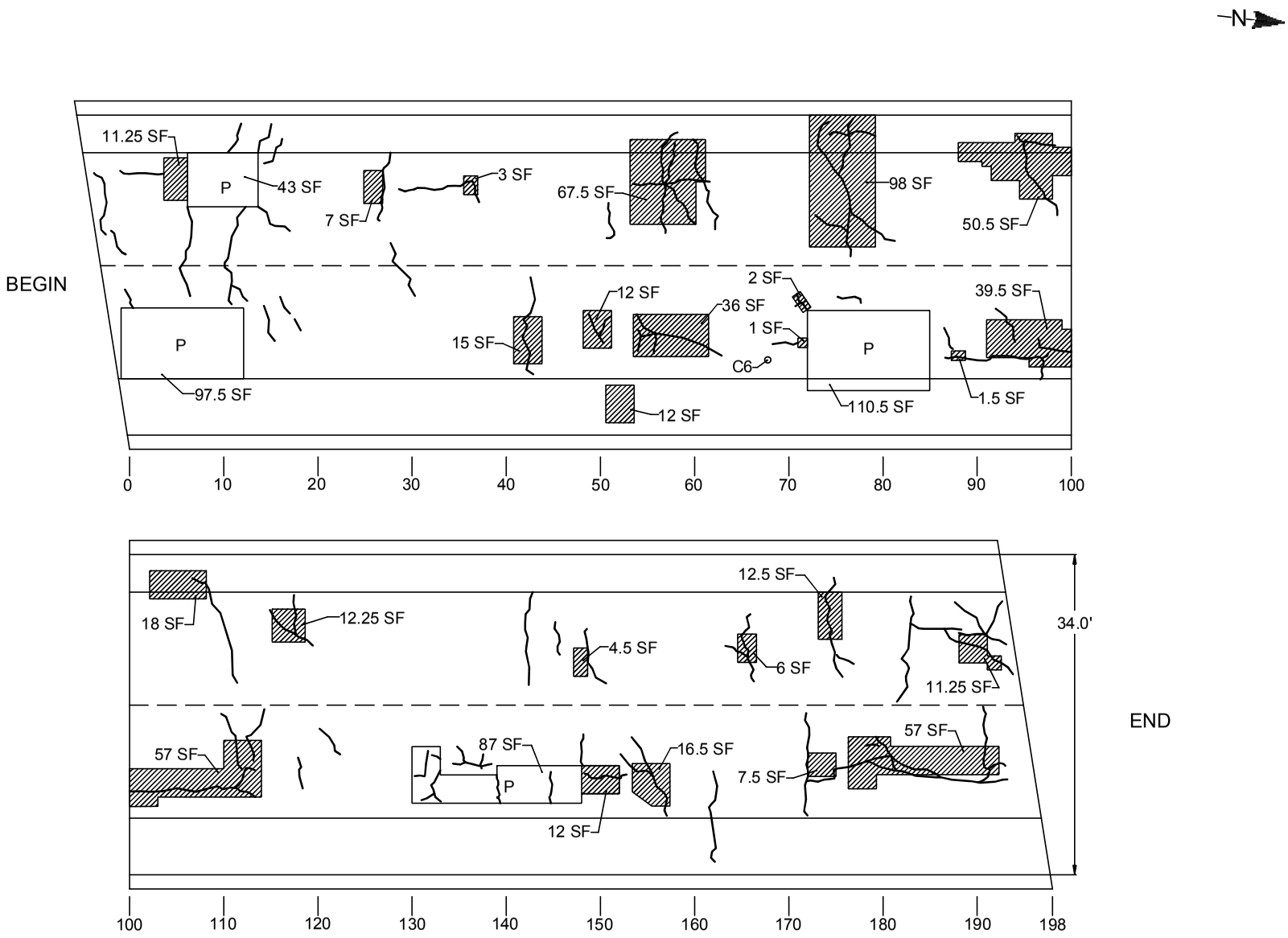

TOTAL DAMAGED AREA EQUALS 570.75 SF WHICH IS 8.5% OF DECK SURFACE

LEGEND

Hollow Concrete | P Patch | Crack | Core Location

BIN:1093572
I481 NB / CSX TRANS/AMTRAK
Span 7 of 15

TOP OF DECK DETERIORATION SKETCH

NOT TO SCALE

DATE: 03/24/2014

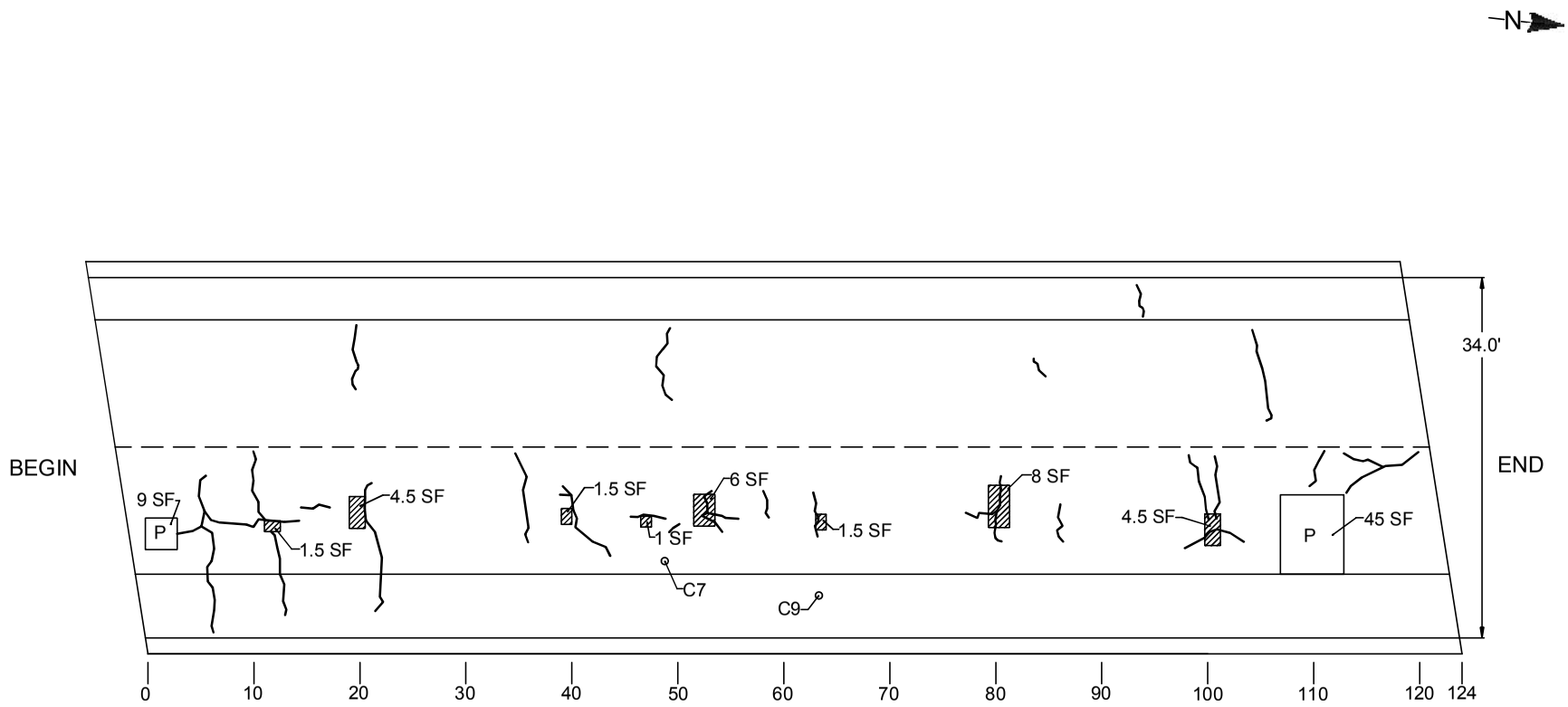

TOTAL DAMAGED AREA EQUALS 28.5 SF WHICH IS 0.7% OF DECK SURFACE

LEGEND			
P	Patch	Crack	
	Hollow Concrete	Core Location	

BIN:1093572
I481 NB / CSX TRANS/AMTRAK
Span 8 of 15

TOP OF DECK DETERIORATION SKETCH

NOT TO SCALE

DATE: 03/24/2014

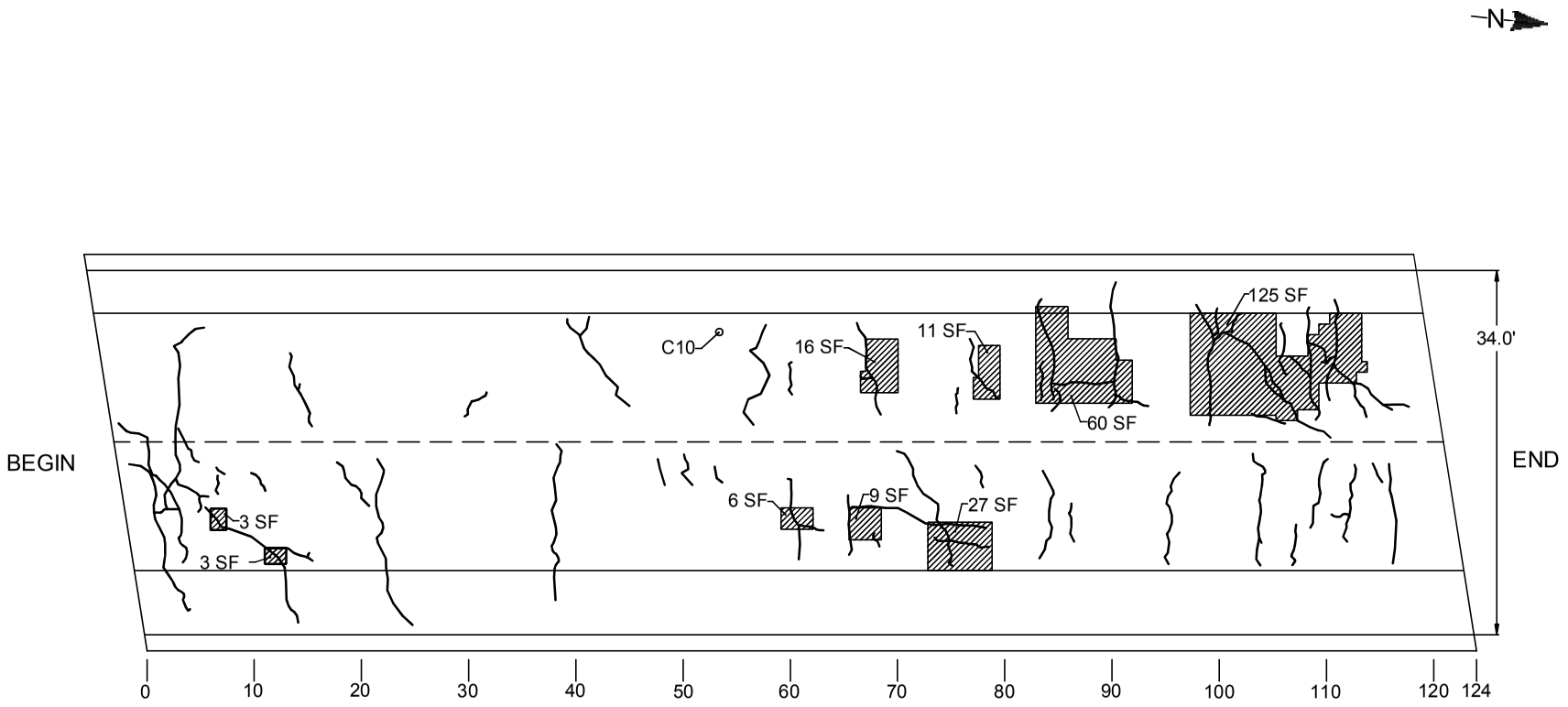

TOTAL DAMAGED AREA EQUALS 260 SF WHICH IS 6.2% OF DECK SURFACE

LEGEND	
Core Location	Crack
Hollow Concrete	

BIN:1093572
I481 NB / CSX TRANS/AMTRAK
Span 9 of 15

TOP OF DECK DETERIORATION SKETCH

NOT TO SCALE

DATE: 03/24/2014

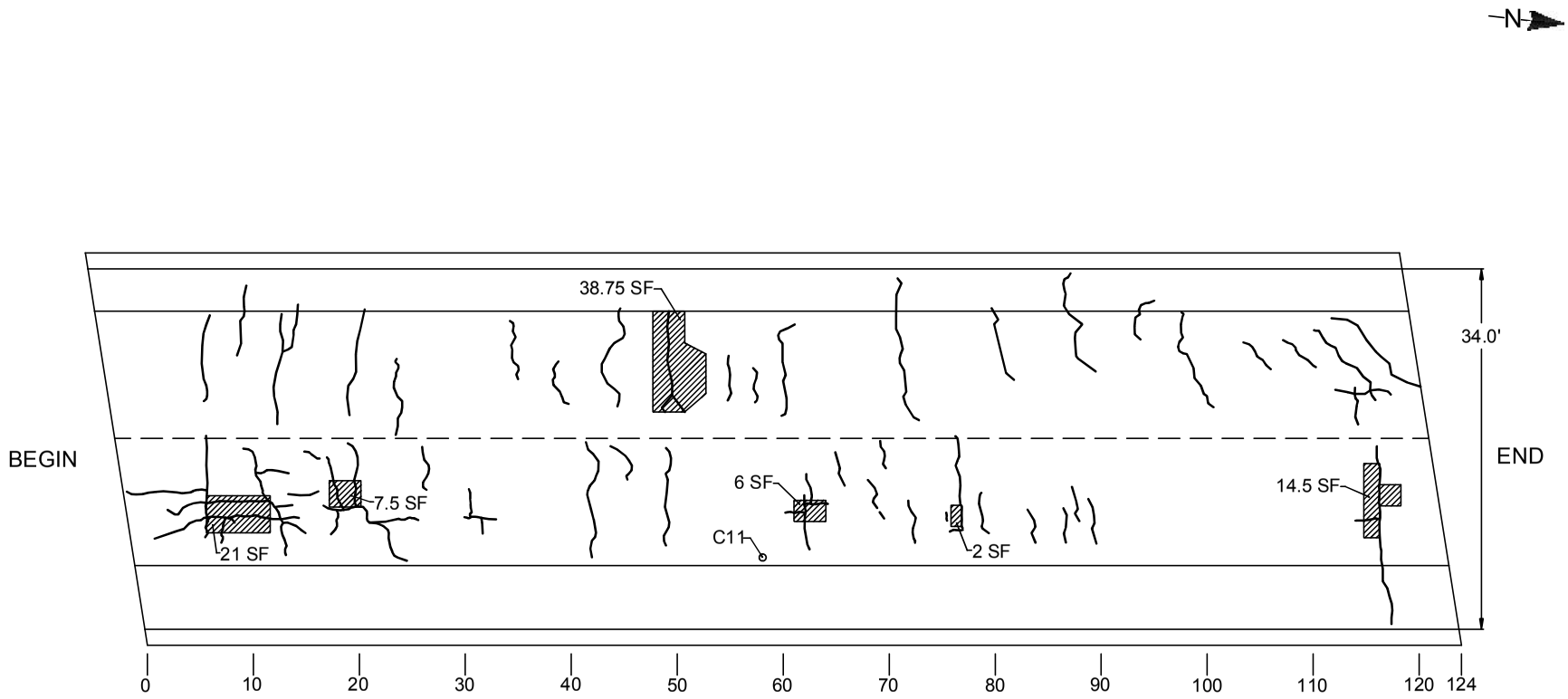

TOTAL DAMAGED AREA EQUALS 89.75 SF WHICH IS 2.1% OF DECK SURFACE

LEGEND	
Core Location	Crack
Hollow Concrete	

BIN:1093572
I481 NB / CSX TRANS/AMTRAK
Span 10 of 15

TOP OF DECK DETERIORATION SKETCH

NOT TO SCALE

DATE: 03/24/2014

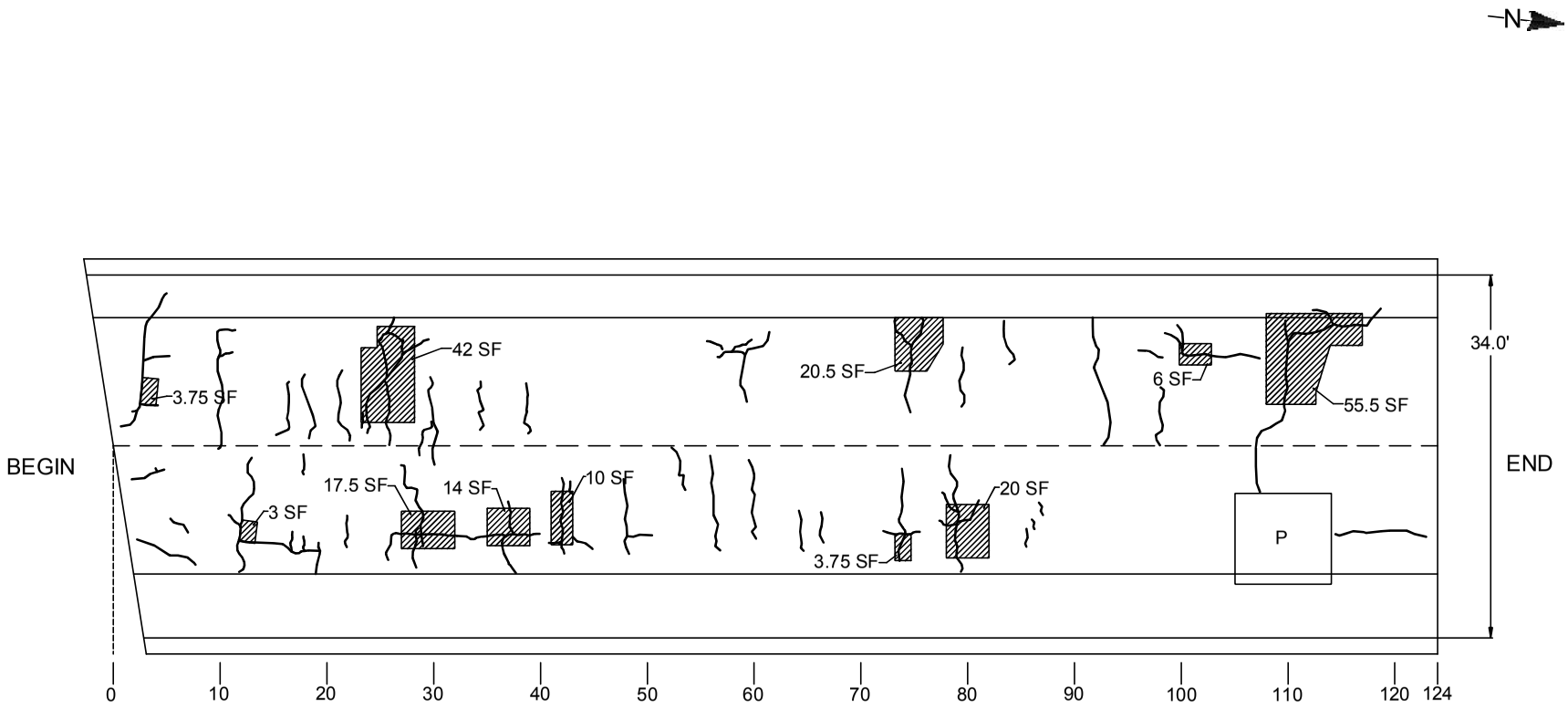

TOTAL DAMAGED AREA EQUALS 196 SF WHICH IS 4.6% OF DECK SURFACE

LEGEND

- Crack
- P — Patch
- Hollow Concrete

BIN:1093572
I481 NB / CSX TRANS/AMTRAK
Span 11 of 15

TOP OF DECK DETERIORATION SKETCH

NOT TO SCALE

DATE: 03/24/2014

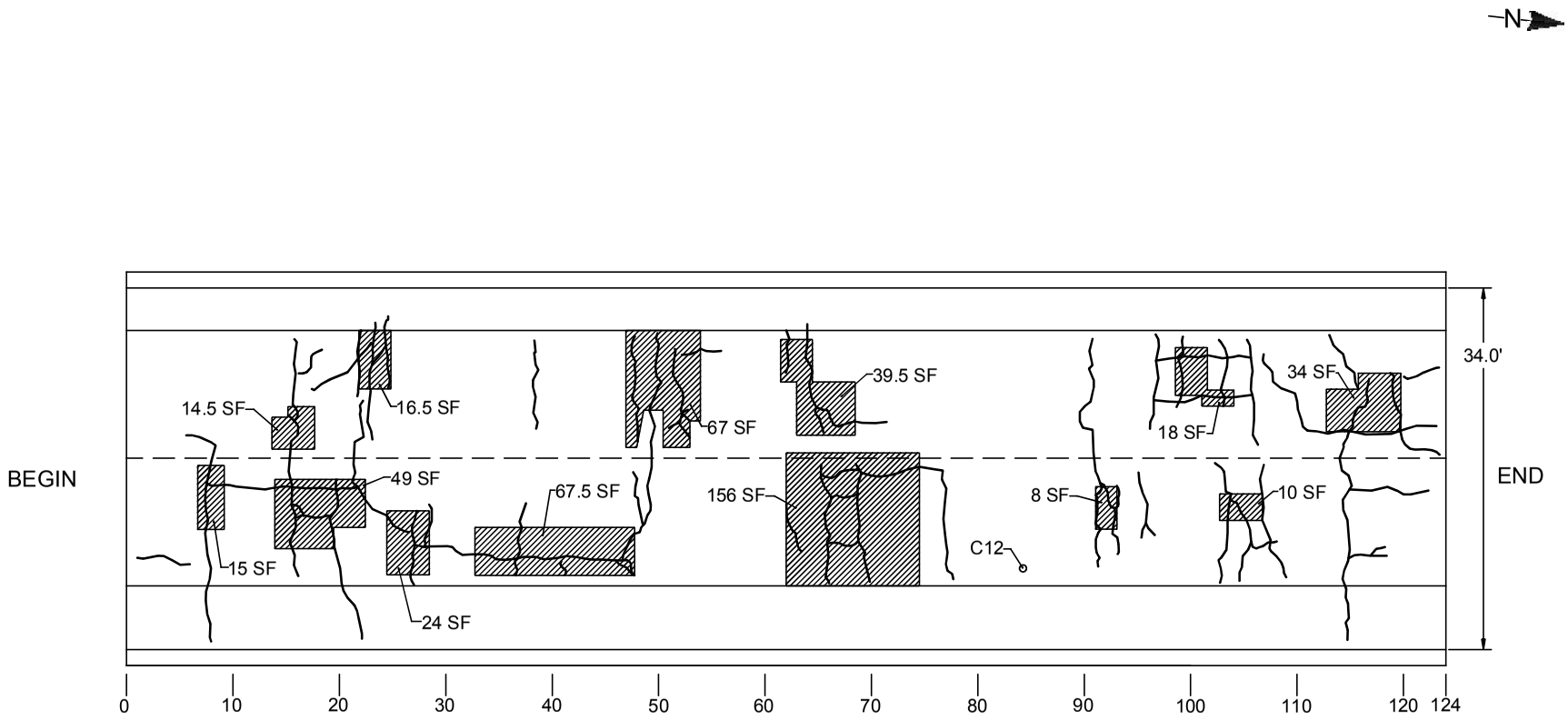

TOTAL DAMAGED AREA EQUALS 519 SF WHICH IS 12.3% OF DECK SURFACE

LEGEND

Core Location

Crack

Hollow Concrete

BIN:1093572
I481 NB / CSX TRANS/AMTRAK
Span 12 of 15

TOP OF DECK DETERIORATION SKETCH

NOT TO SCALE

DATE: 03/24/2014

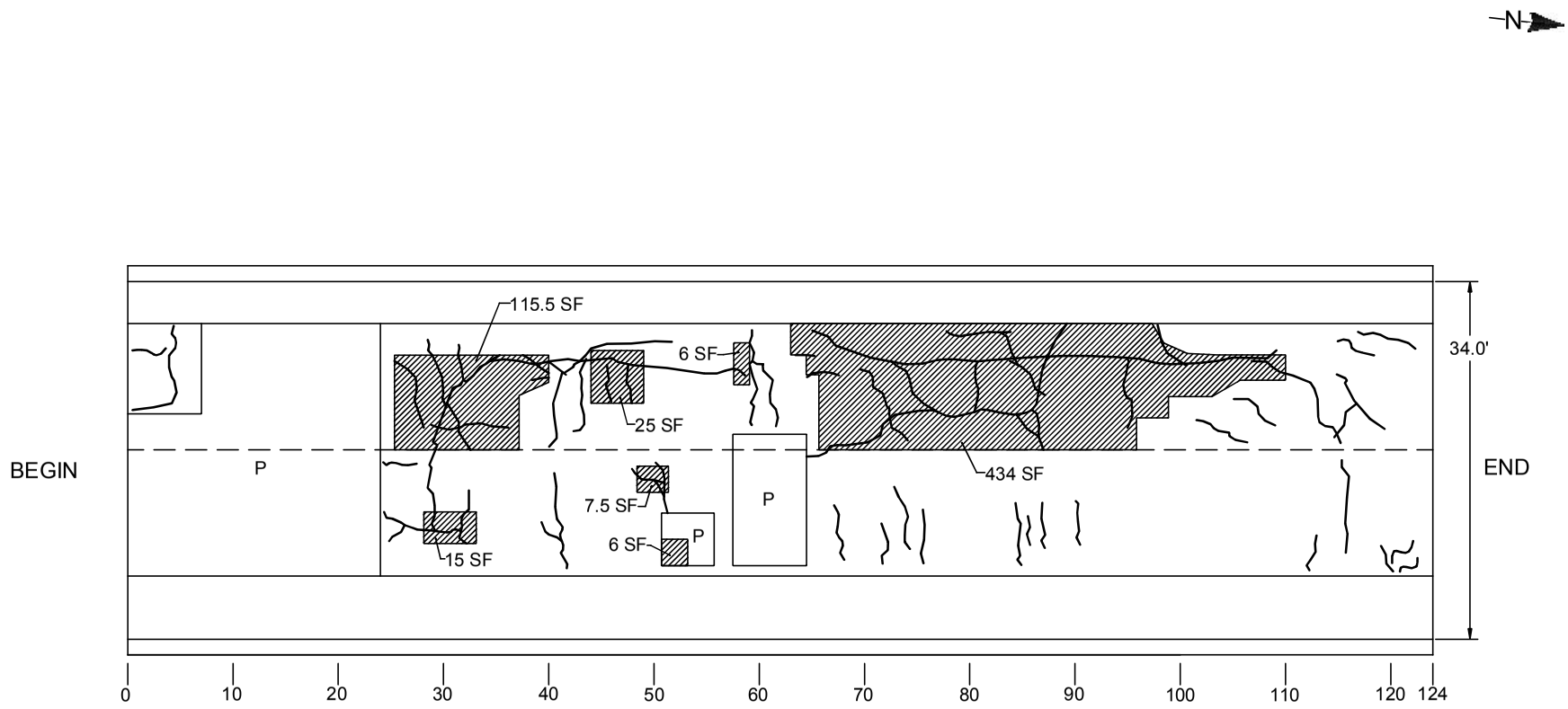

TOTAL DAMAGED AREA EQUALS 609 SF WHICH IS 14.4% OF DECK SURFACE

LEGEND	
Crack	
P	Patch
	Hollow Concrete

BIN:1093572
I481 NB / CSX TRANS/AMTRAK
Span 13 of 15

TOP OF DECK DETERIORATION SKETCH

NOT TO SCALE

DATE: 03/24/2014

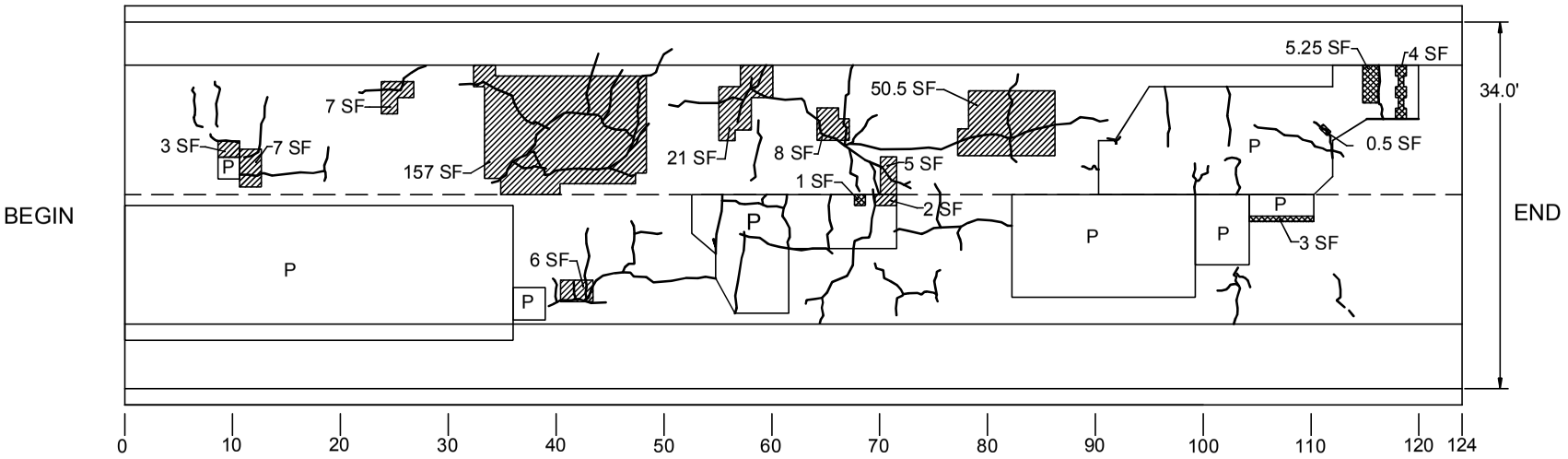

TOTAL DAMAGED AREA EQUALS 280.25 SF WHICH IS 6.6% OF DECK SURFACE

LEGEND

Crack	Spall
Patch	Hollow Concrete

BIN:1093572
I481 NB / CSX TRANS/AMTRAK
Span 14 of 15

TOP OF DECK DETERIORATION SKETCH

NOT TO SCALE

DATE: 03/24/2014

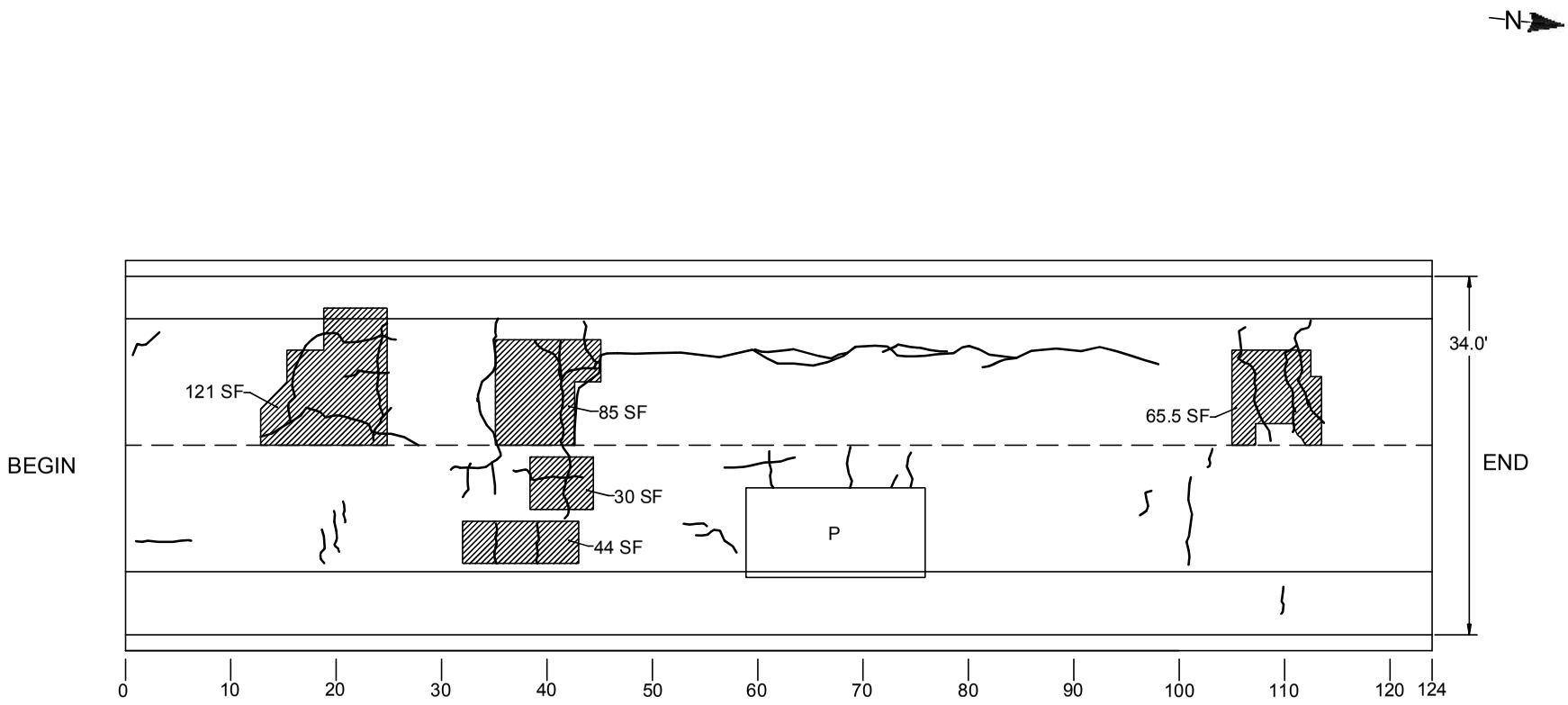

TOTAL DAMAGED AREA EQUALS 345.5 SF WHICH IS 8.2% OF DECK SURFACE

LEGEND

- Crack
- P — Patch
- Hollow Concrete

BIN:1093572
I481 NB / CSX TRANS/AMTRAK
Span 15 of 15

TOP OF DECK DETERIORATION SKETCH

NOT TO SCALE

DATE: 03/24/2014

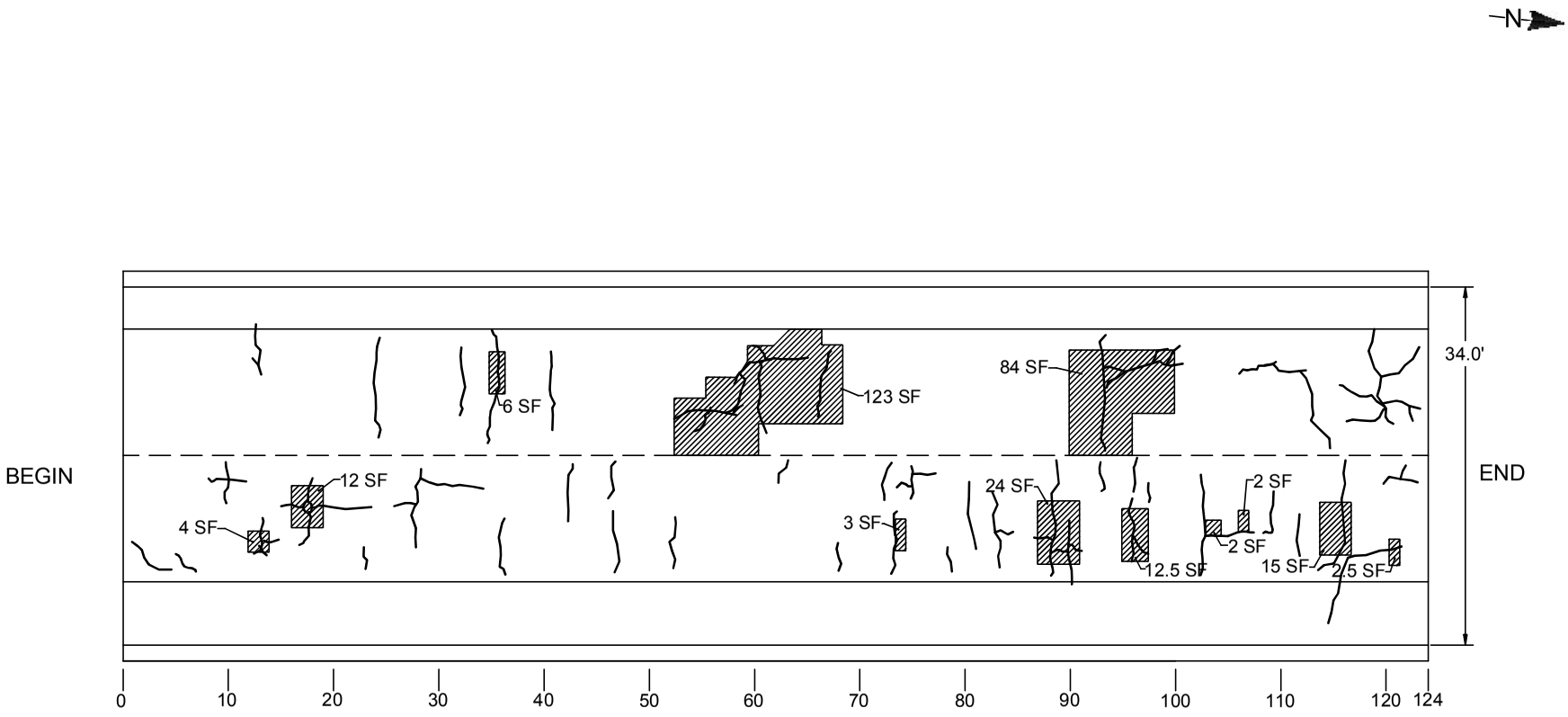

TOTAL DAMAGED AREA EQUALS 290 SF WHICH IS 6.9% OF DECK SURFACE

LEGEND
Crack
Hollow Concrete

BIN: 1093572
I481 NB / CSX TRANS/AMTRAK

PIER 1 DETERIORATION SKETCH

NOT TO SCALE

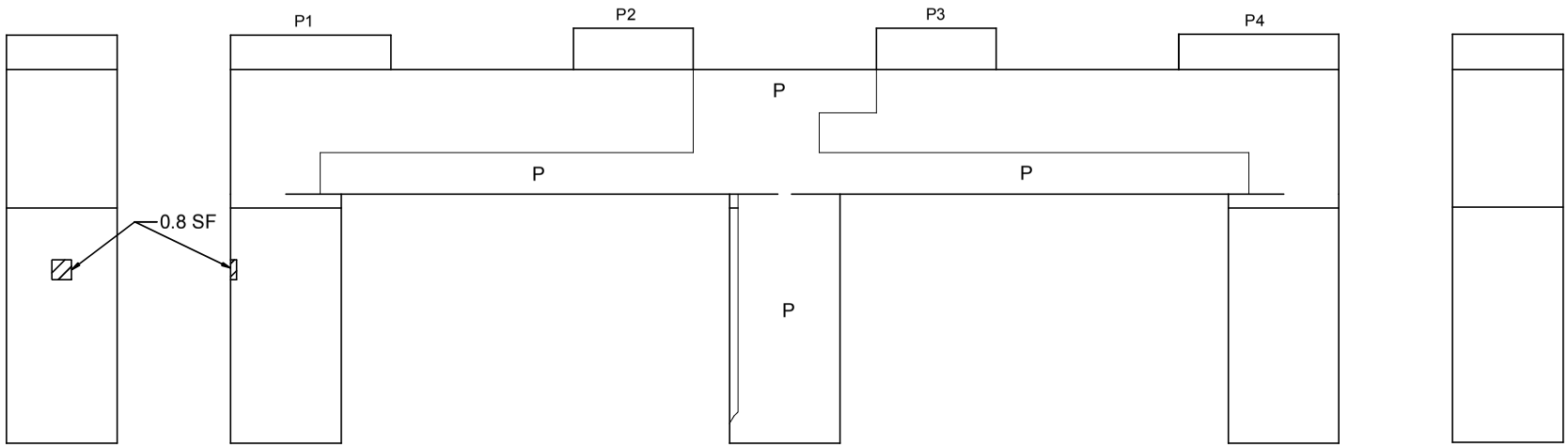

PIER 1 BEGIN ELEVATION

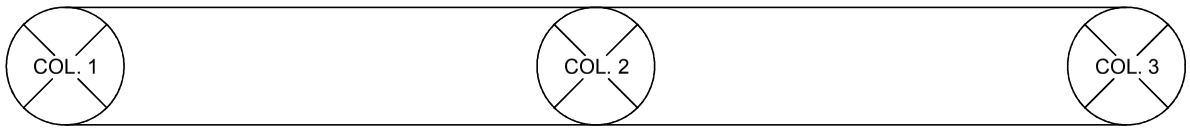

UNDERSIDE OF CAPBEAM

TOTAL DAMAGED AREA EQUALS 8.3 SF WHICH IS 0.8% OF PIER SURFACE

LEGEND
Hollow Concrete (HC)
Spall (S)
P Patch
Crack (C)
Hairline Crack (HL)

BIN: 1093572
I481 NB / CSX TRANS/AMTRAK

PIER 1 DETERIORATION SKETCH

NOT TO SCALE

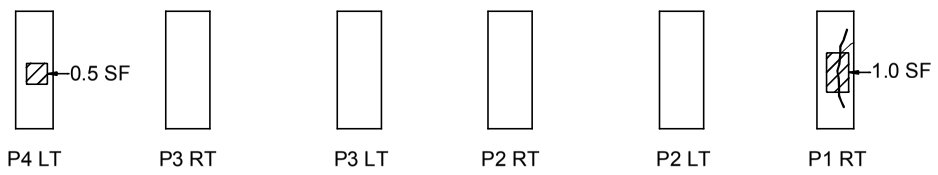

* NOTE: P1 LT & P4 RT VIEWS LOCATED ON PIER 1 DETERIORATION SKETCH SHEET 1 OF 2

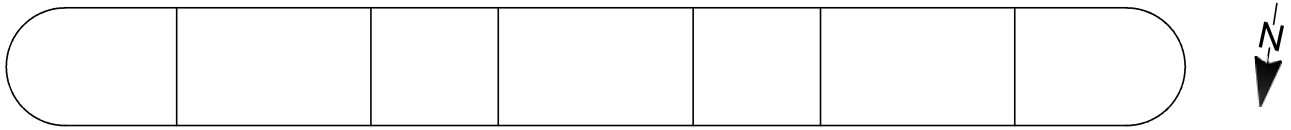

PLAN

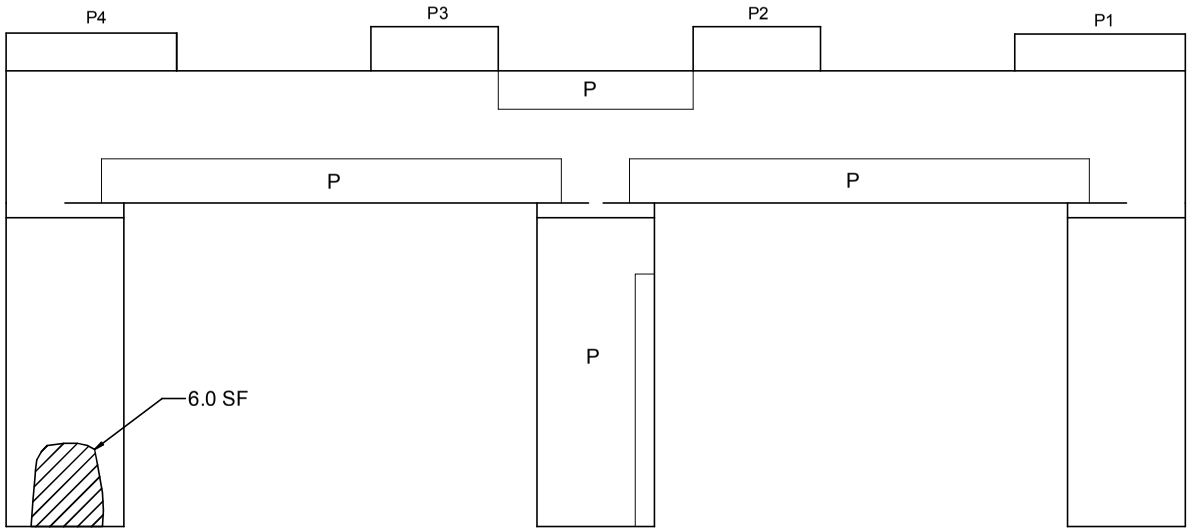

PIER 1 END ELEVATION

LEGEND	
	Hollow Concrete (HC)
	Spall (S)
P	Patch
	Crack (C)
	Hairline Crack (HL)

TOTAL DAMAGED AREA EQUALS 8.3 SF WHICH IS 0.8% OF PIER SURFACE

BIN: 1093572
I481 NB / CSX TRANS/AMTRAK

PIER 2 DETERIORATION SKETCH

NOT TO SCALE

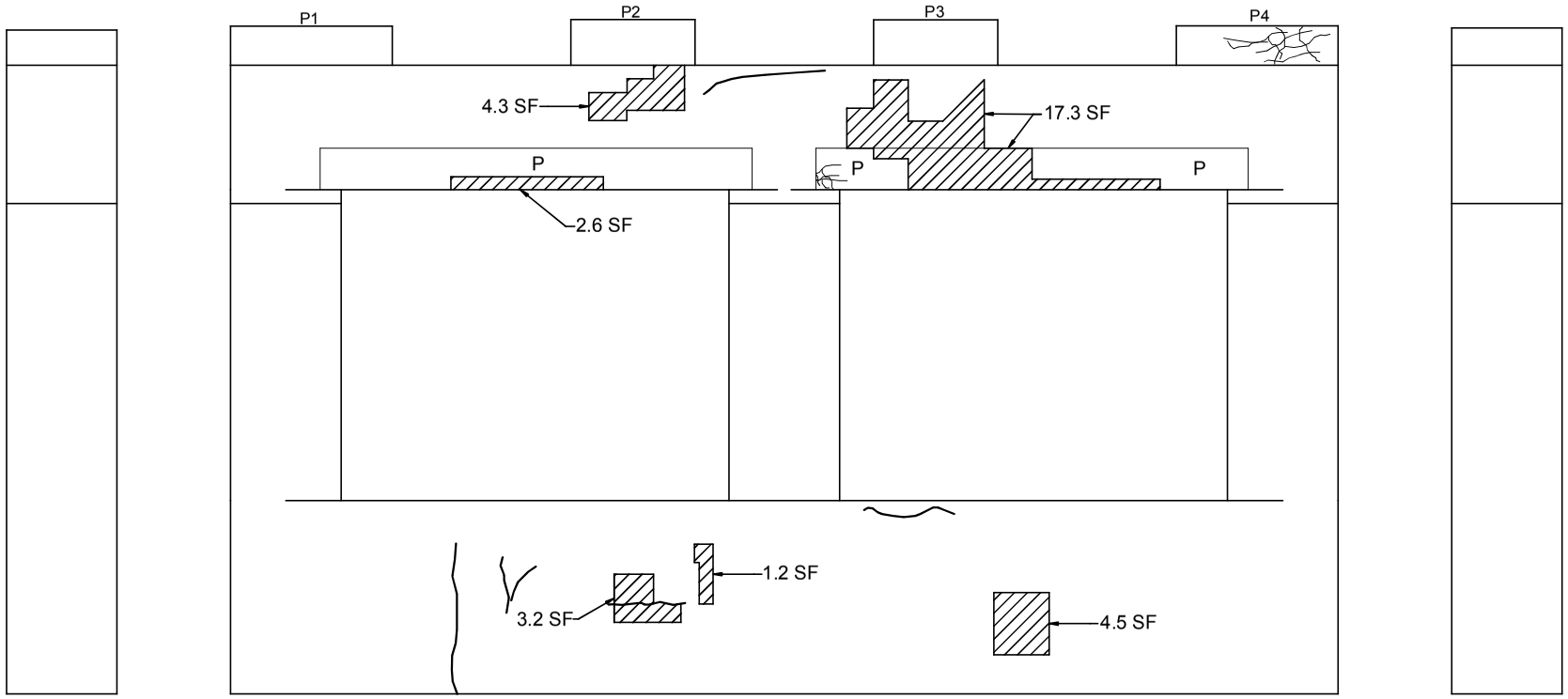

PIER 2 BEGIN ELEVATION

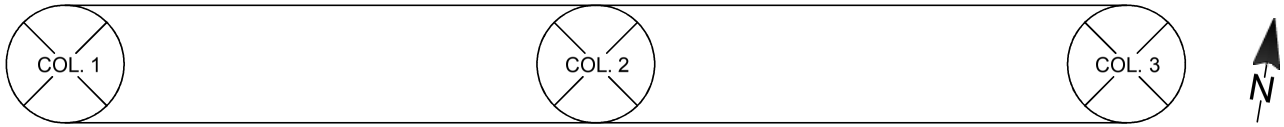

TOP OF STEM SOLID PIER

TOTAL DAMAGED AREA EQUALS 59.8 SF
WHICH IS 3.3% OF PIER SURFACE

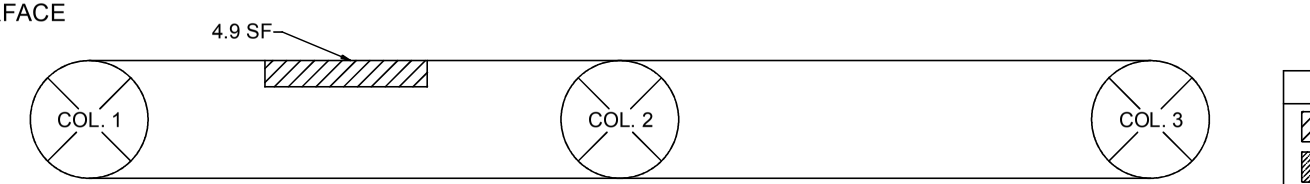

UNDERSIDE OF CAPBEAM

LEGEND
Hollow Concrete (HC)
Spall (S)
P Patch
Crack (C)
Hairline Crack (HL)

BIN: 1093572
I481 NB / CSX TRANS/AMTRAK

PIER 2 DETERIORATION SKETCH

NOT TO SCALE

* NOTE: P1 LT & P4 RT VIEWS LOCATED ON PIER 2 DETERIORATION SKETCH SHEET 1 OF 2

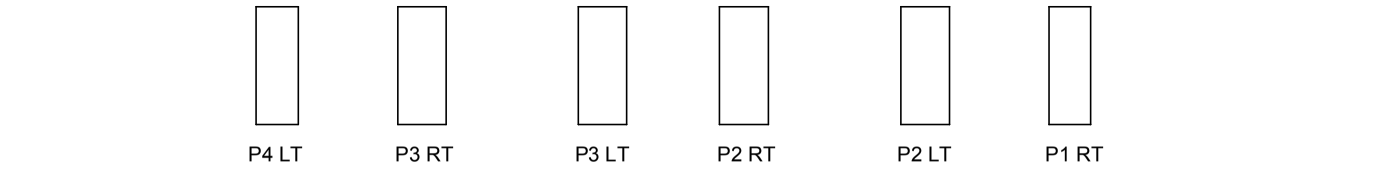

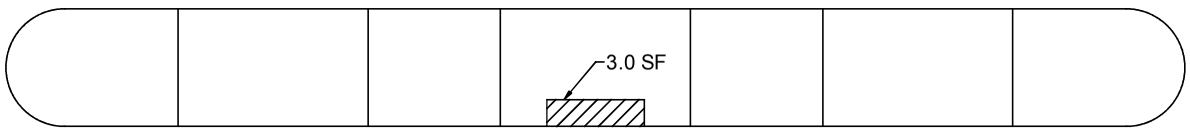

PLAN

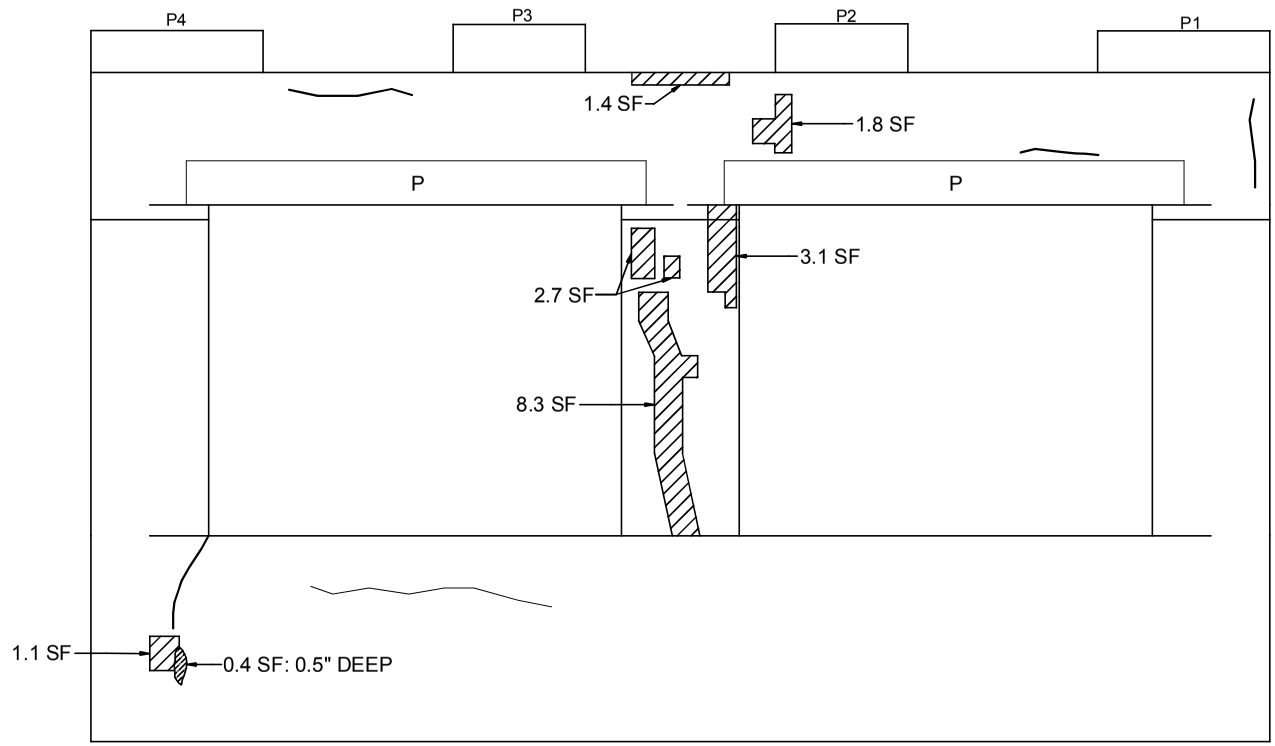

PIER 2 END ELEVATION

TOTAL DAMAGED AREA EQUALS 59.8 SF WHICH IS 3.3% OF PIER SURFACE

LEGEND

- Hollow Concrete (HC)
- Spall (S)
- P — Patch
- Crack (C)
- Hairline Crack (HL)

BIN: 1093572
I481 NB / CSX TRANS/AMTRAK

PIER 3 DETERIORATION SKETCH

NOT TO SCALE

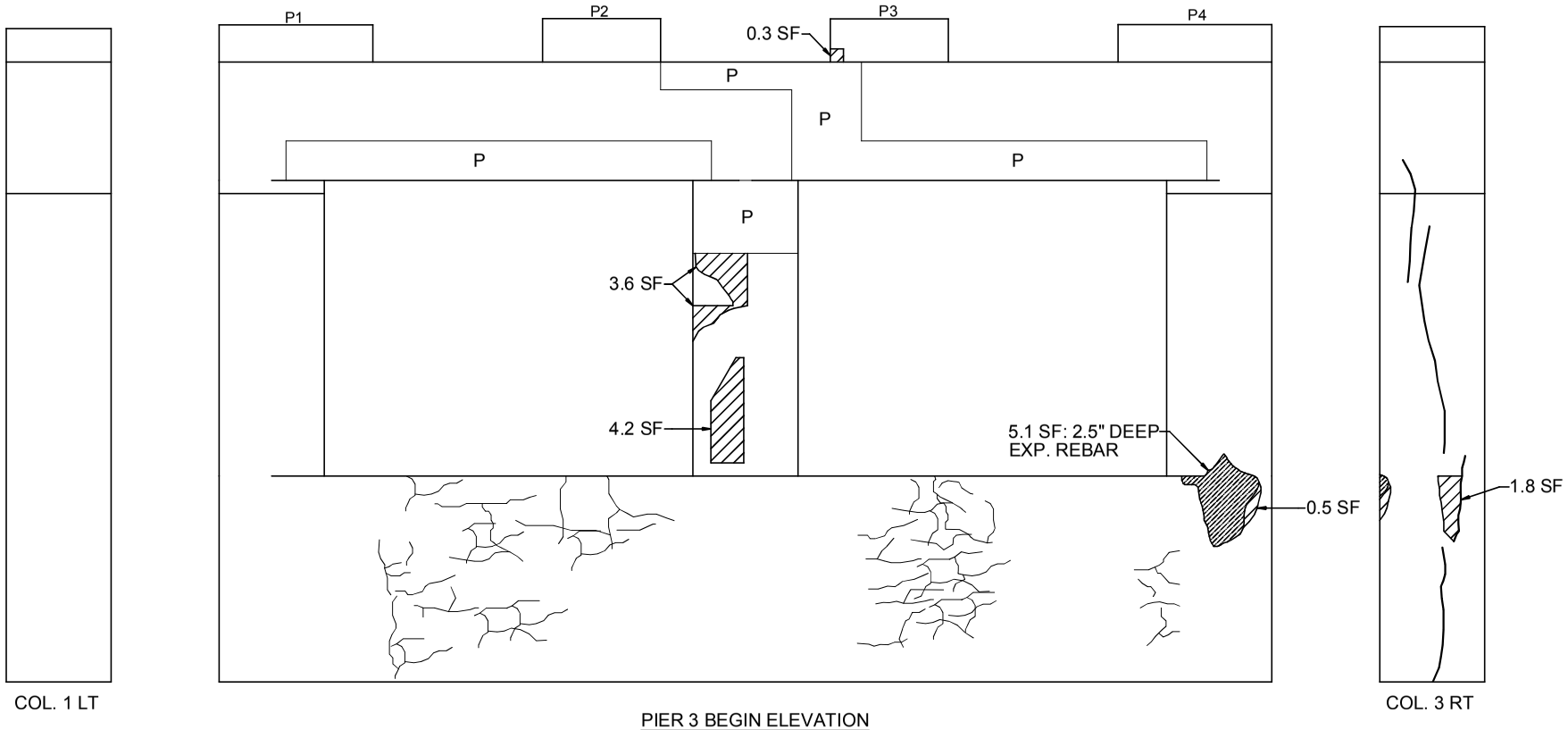

PIER 3 BEGIN ELEVATION

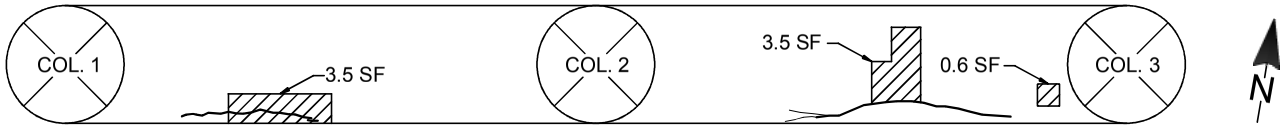

TOP OF STEM SOLID PIER

TOTAL DAMAGED AREA EQUALS 29.1 SF
WHICH IS 1.6% OF PIER SURFACE

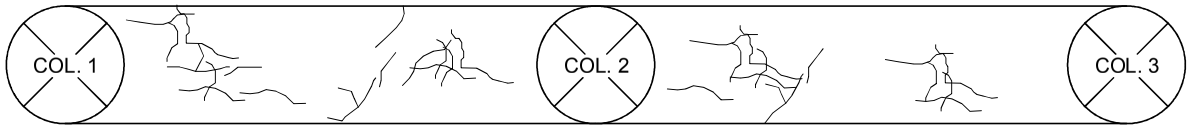

UNDERSIDE OF CAPBEAM

LEGEND

- Hollow Concrete (HC)
- Spall (S)
- P — Patch
- Crack (C)
- Hairline Crack (HL)

BIN: 1093572
I481 NB / CSX TRANS/AMTRAK

PIER 3 DETERIORATION SKETCH

NOT TO SCALE

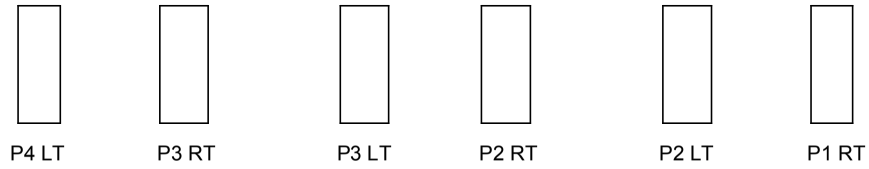

* NOTE: P1 LT & P4 RT VIEWS LOCATED ON PIER 3 DETERIORATION SKETCH SHEET 1 OF 2



PLAN

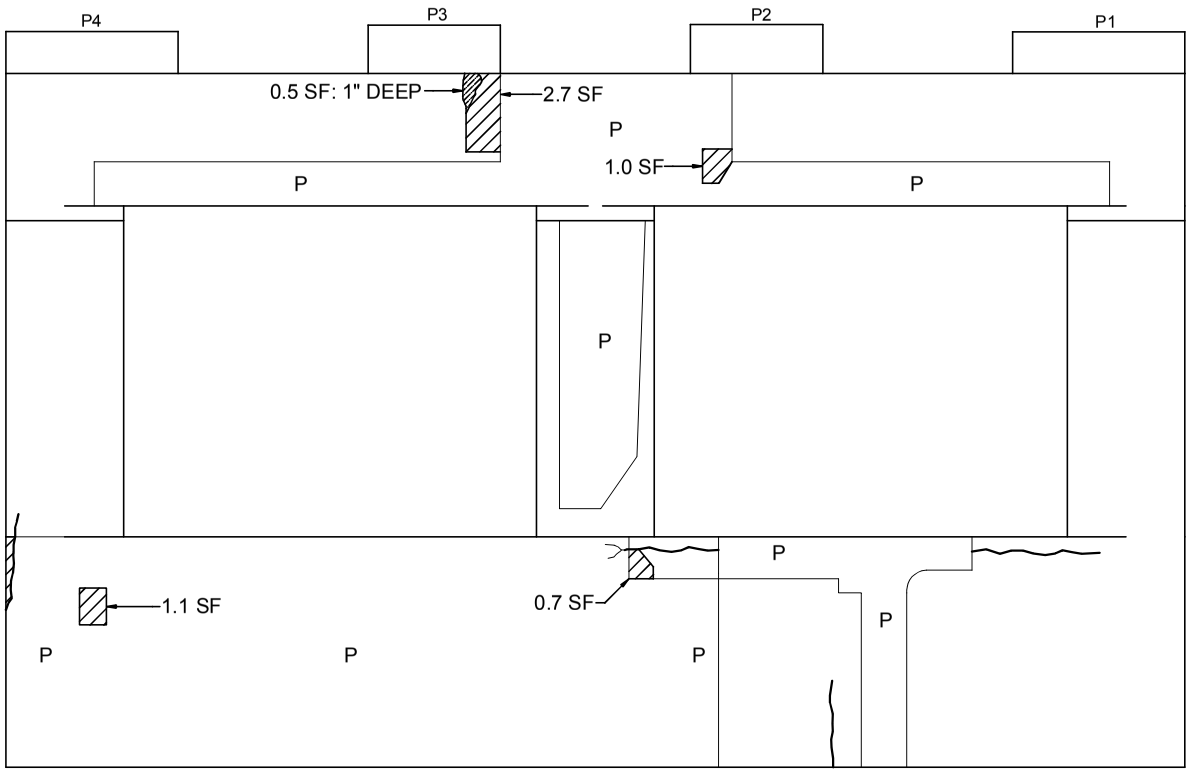

PIER 3 END ELEVATION

TOTAL DAMAGED AREA EQUALS 29.1 SF WHICH IS 1.6% OF PIER SURFACE

LEGEND

- Hollow Concrete (HC)
- Spall (S)
- P — Patch
- Crack (C)
- Hairline Crack (HL)

BIN: 1093572
I481 NB / CSX TRANS/AMTRAK

PIER 4 DETERIORATION SKETCH

NOT TO SCALE

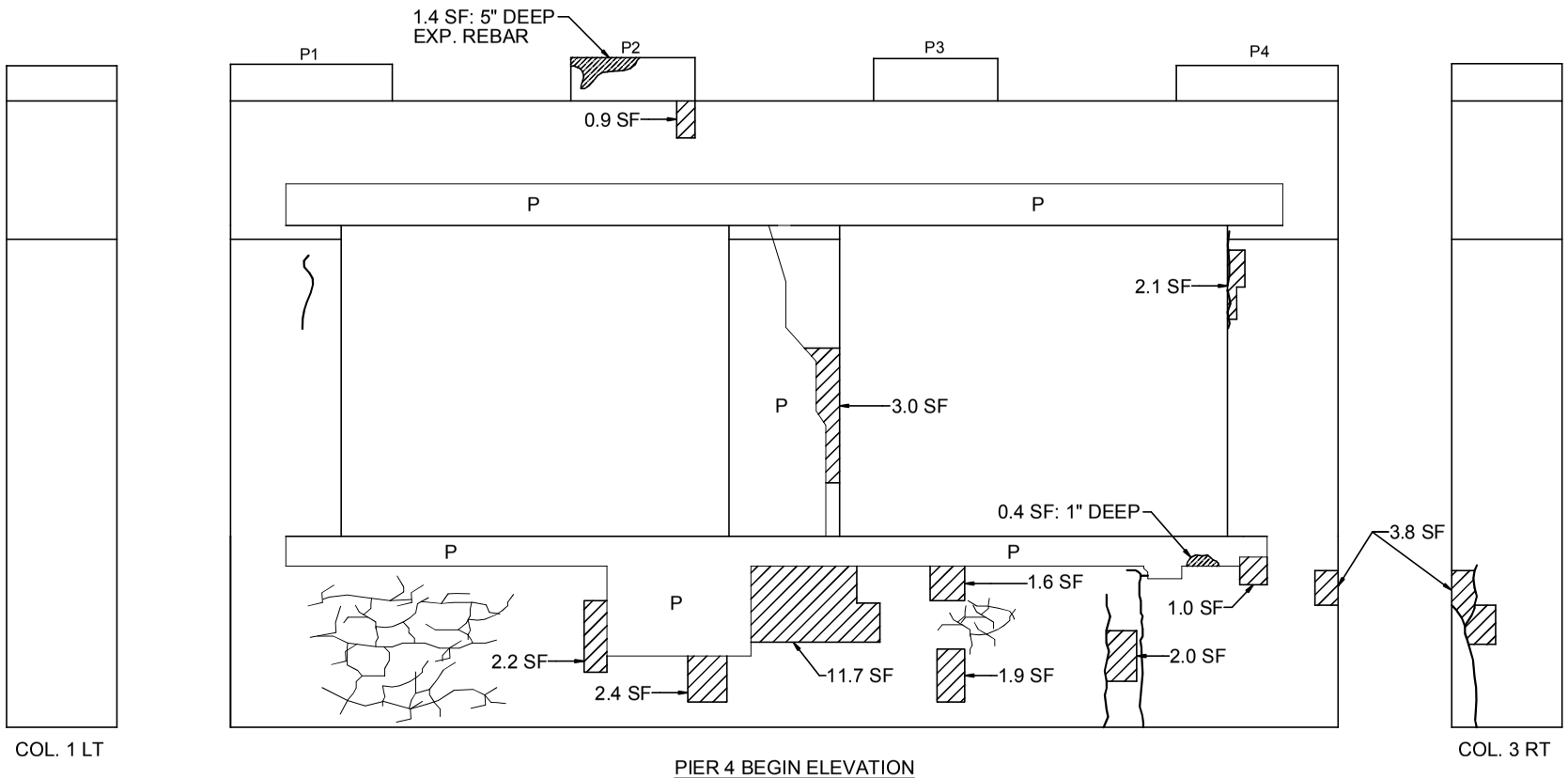

PIER 4 BEGIN ELEVATION

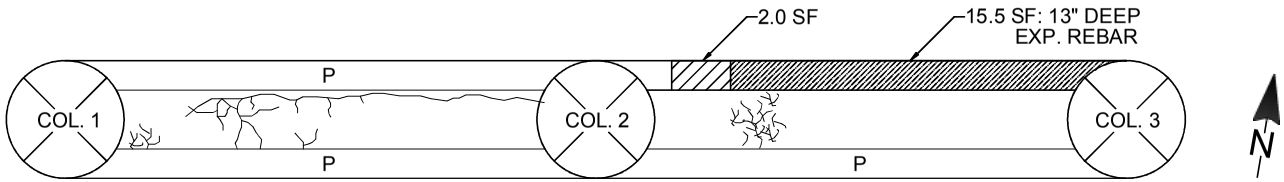

TOP OF STEM SOLID PIER

TOTAL DAMAGED AREA EQUALS 106.8 SF
WHICH IS 5.9% OF PIER SURFACE

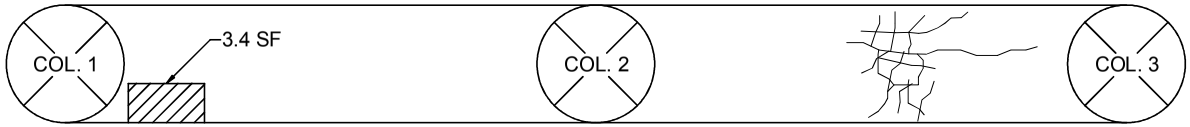

UNDERSIDE OF CAPBEAM

LEGEND

- Hollow Concrete (HC)
- Spall (S)
- P — Patch
- Crack (C)
- Hairline Crack (HL)

BIN: 1093572
I481 NB / CSX TRANS/AMTRAK

PIER 4 DETERIORATION SKETCH

NOT TO SCALE

* NOTE: P1 LT & P4 RT VIEWS LOCATED ON PIER 4 DETERIORATION SKETCH SHEET 1 OF 2

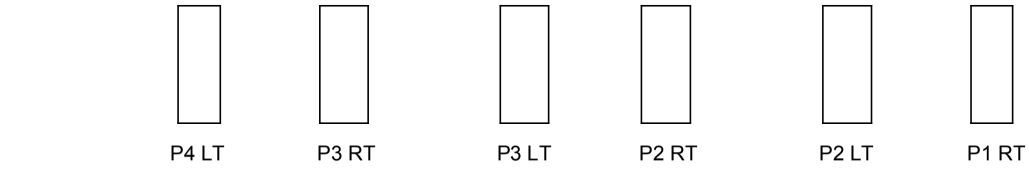

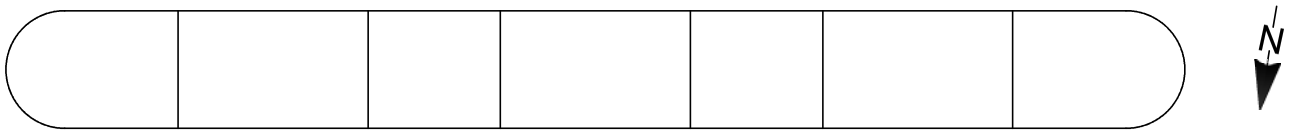

PLAN

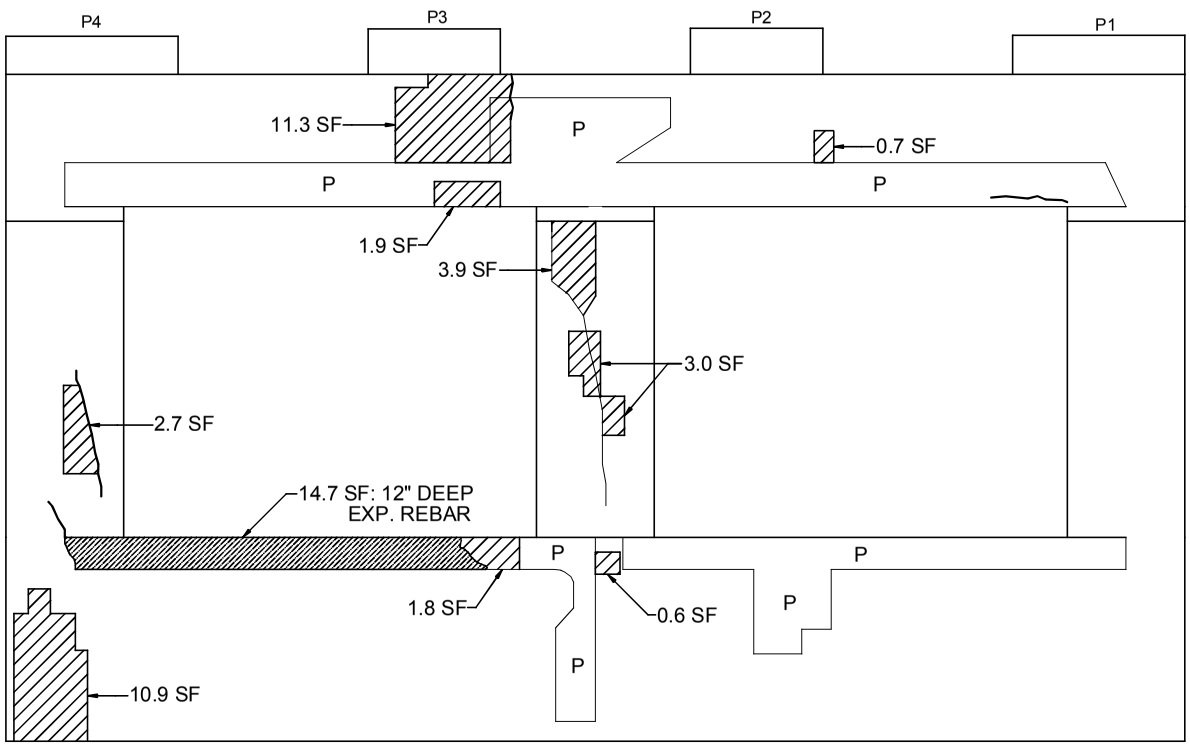

PIER 4 END ELEVATION

TOTAL DAMAGED AREA EQUALS 106.8 SF WHICH IS 5.9% OF PIER SURFACE

LEGEND
Hollow Concrete (HC)
Spall (S)
P Patch
Crack (C)
Hairline Crack (HL)

BIN: 1093572
I481 NB / CSX TRANS/AMTRAK

PIER 5 DETERIORATION SKETCH

NOT TO SCALE

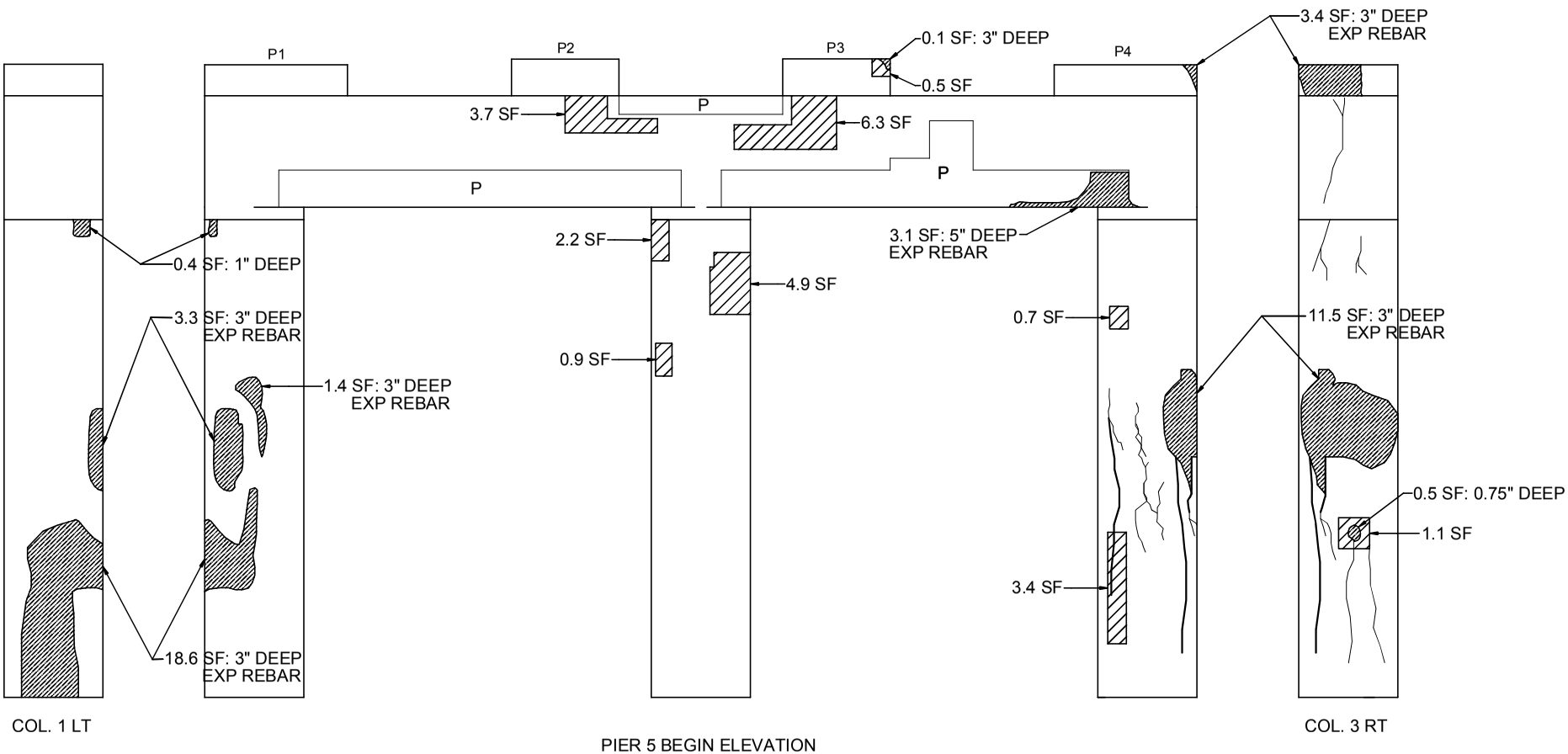

PIER 5 BEGIN ELEVATION

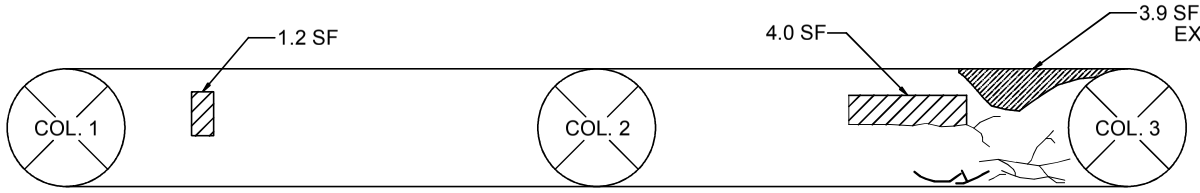

UNDERSIDE OF CAPBEAM

TOTAL DAMAGED AREA EQUALS 89.4 SF WHICH IS 5.9% OF PIER SURFACE

LEGEND
Hollow Concrete (HC)
Spall (S)
P Patch
Crack (C)
Hairline Crack (HL)

BIN: 1093572
I481 NB / CSX TRANS/AMTRAK

PIER 5 DETERIORATION SKETCH

NOT TO SCALE

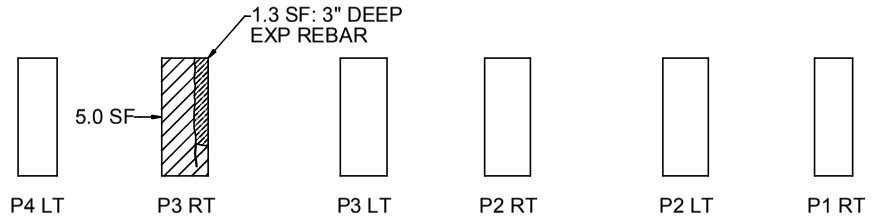

* NOTE: P1 LT & P4 RT VIEWS LOCATED ON PIER 5 DETERIORATION SKETCH SHEET 1 OF 2

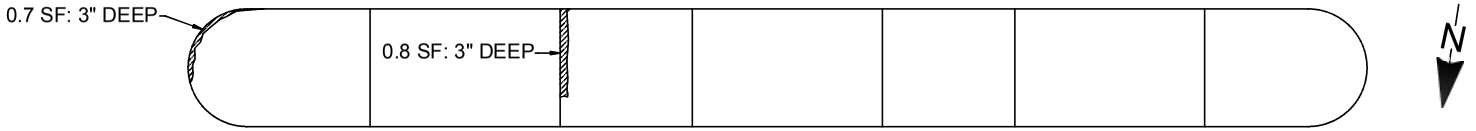

PLAN

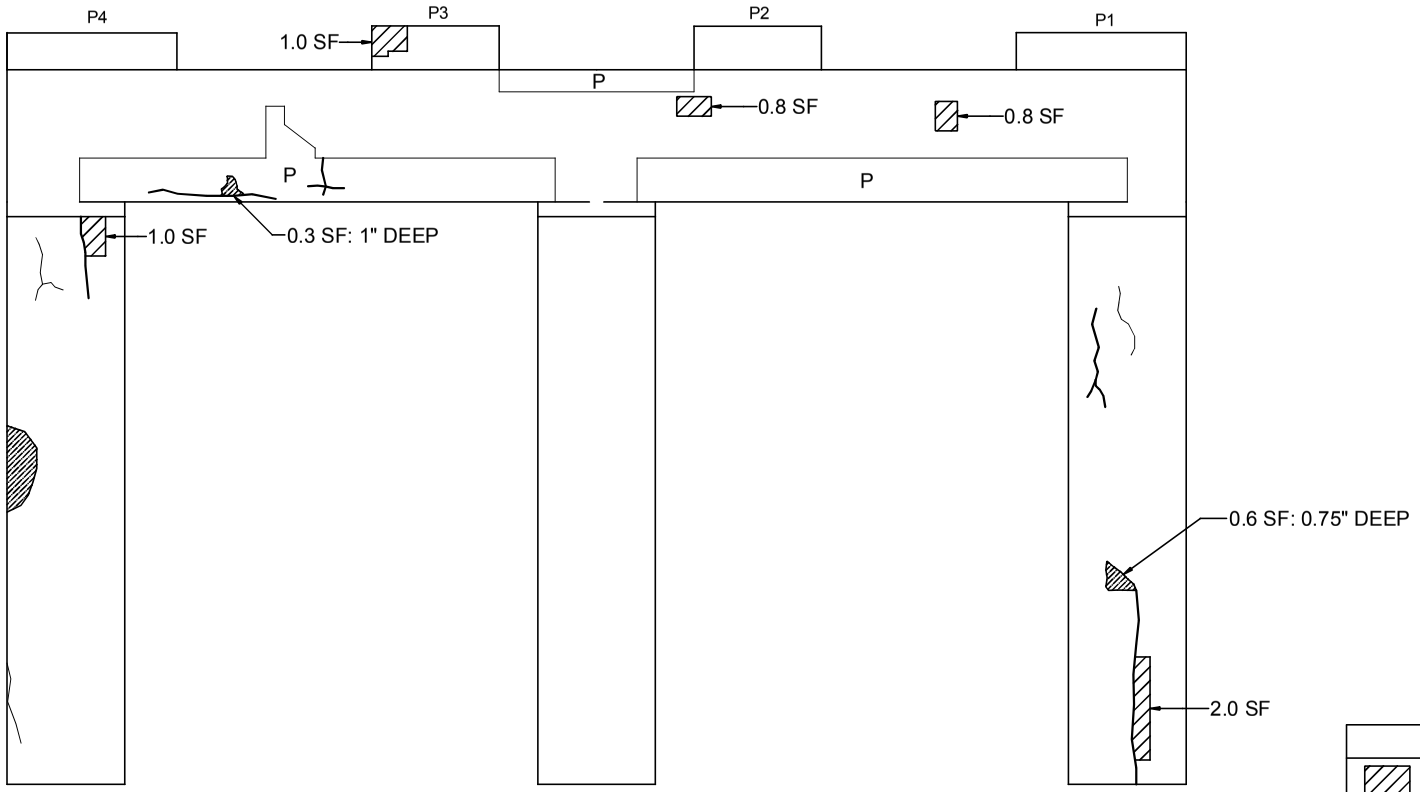

PIER 5 END ELEVATION

TOTAL DAMAGED AREA EQUALS 89.4 SF
WHICH IS 5.9% OF PIER SURFACE

LEGEND
Hollow Concrete (HC)
Spall (S)
P Patch
Crack (C)
Hairline Crack (HL)

BIN: 1093572
I481 NB / CSX TRANS/AMTRAK

PIER 6 DETERIORATION SKETCH

NOT TO SCALE

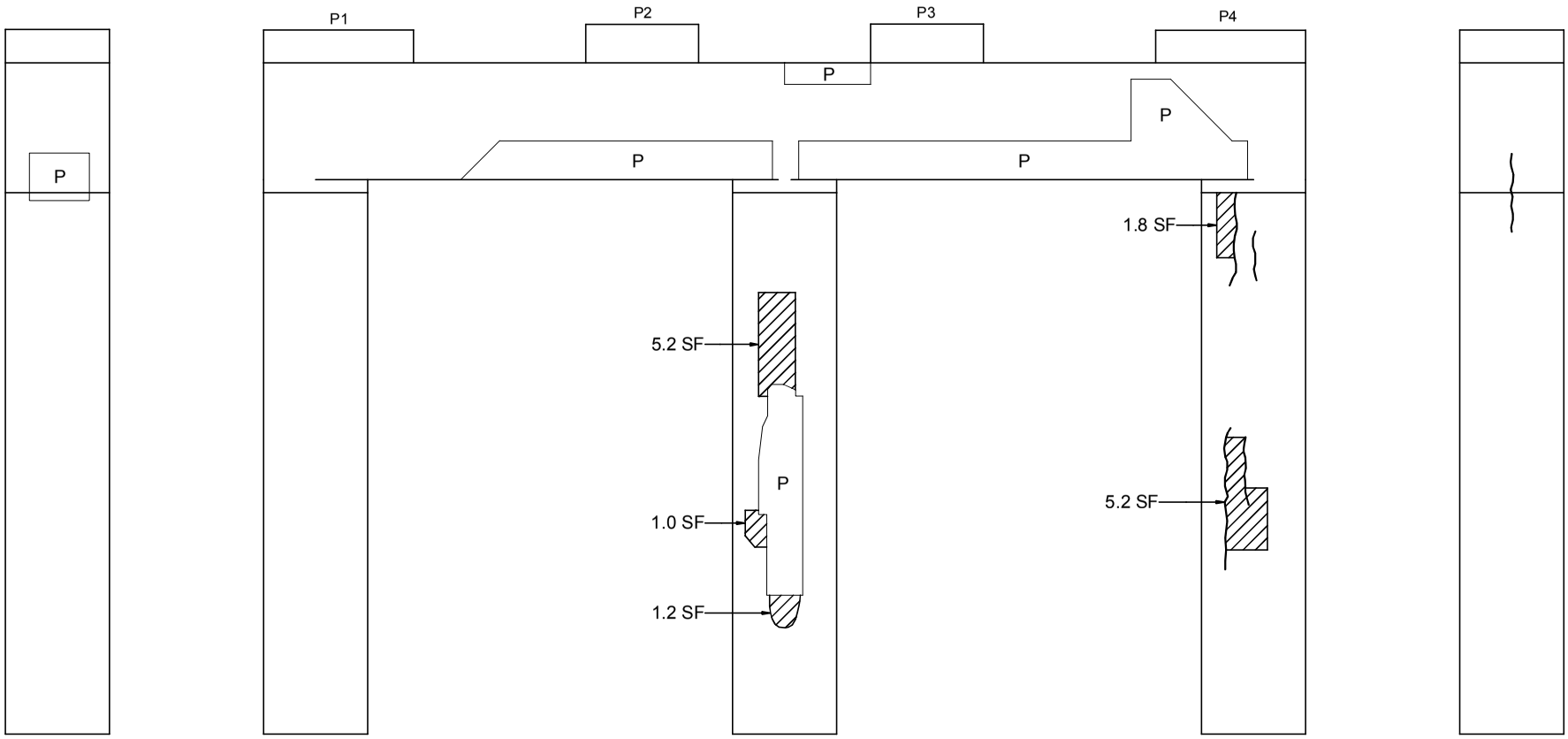

COL. 1 LT

PIER 6 BEGIN ELEVATION

COL. 3 RT

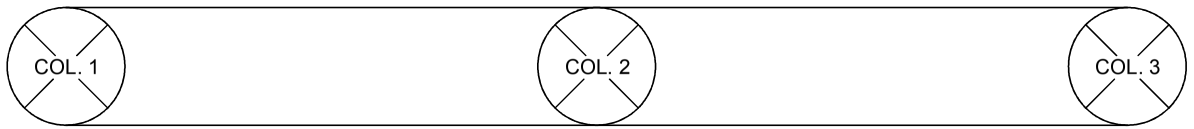

UNDERSIDE OF CAPBEAM

TOTAL DAMAGED AREA EQUALS 14.4 SF WHICH IS 0.9% OF PIER SURFACE

LEGEND

- Hollow Concrete (HC)
- Spall (S)
- P — Patch
- Crack (C)
- Hairline Crack (HL)

BIN: 1093572
I481 NB / CSX TRANS/AMTRAK

PIER 6 DETERIORATION SKETCH

NOT TO SCALE

* NOTE: P1 LT & P4 RT VIEWS LOCATED ON PIER 6 DETERIORATION SKETCH SHEET 1 OF 2

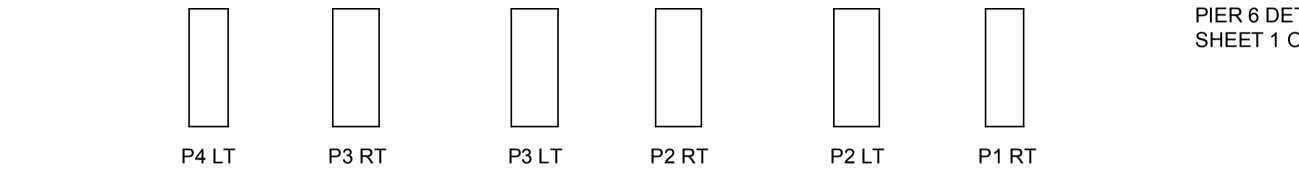

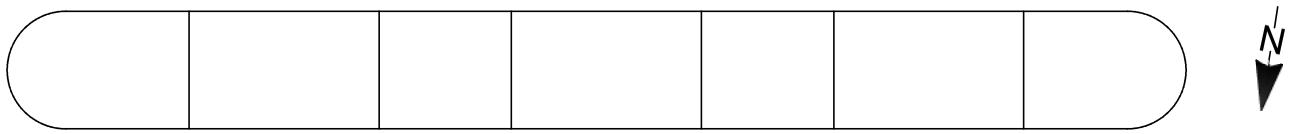

PLAN

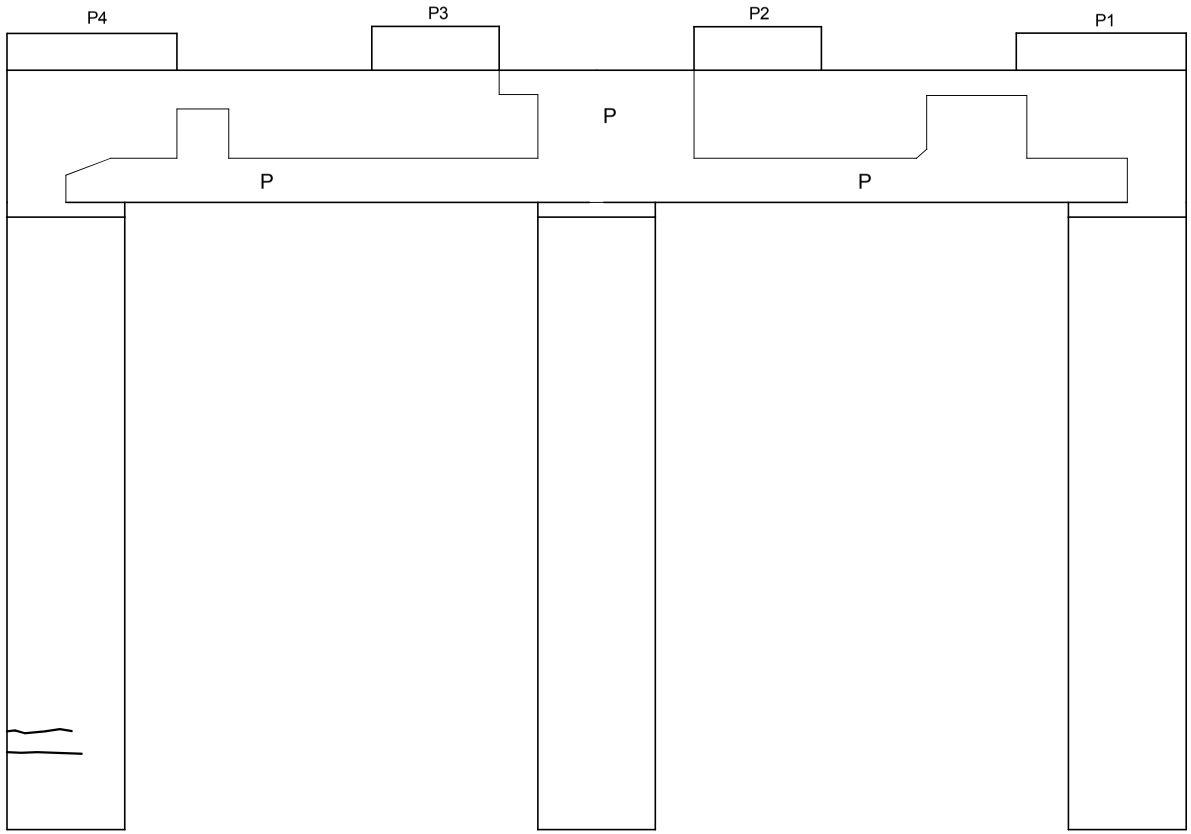

PIER 6 END ELEVATION

TOTAL DAMAGED AREA EQUALS 14.4 SF
WHICH IS 0.9% OF PIER SURFACE

LEGEND	
	Hollow Concrete (HC)
	Spall (S)
P	Patch
	Crack (C)
	Hairline Crack (HL)

BIN: 1093572
I481 NB / CSX TRANS/AMTRAK

PIER 7 DETERIORATION SKETCH

NOT TO SCALE

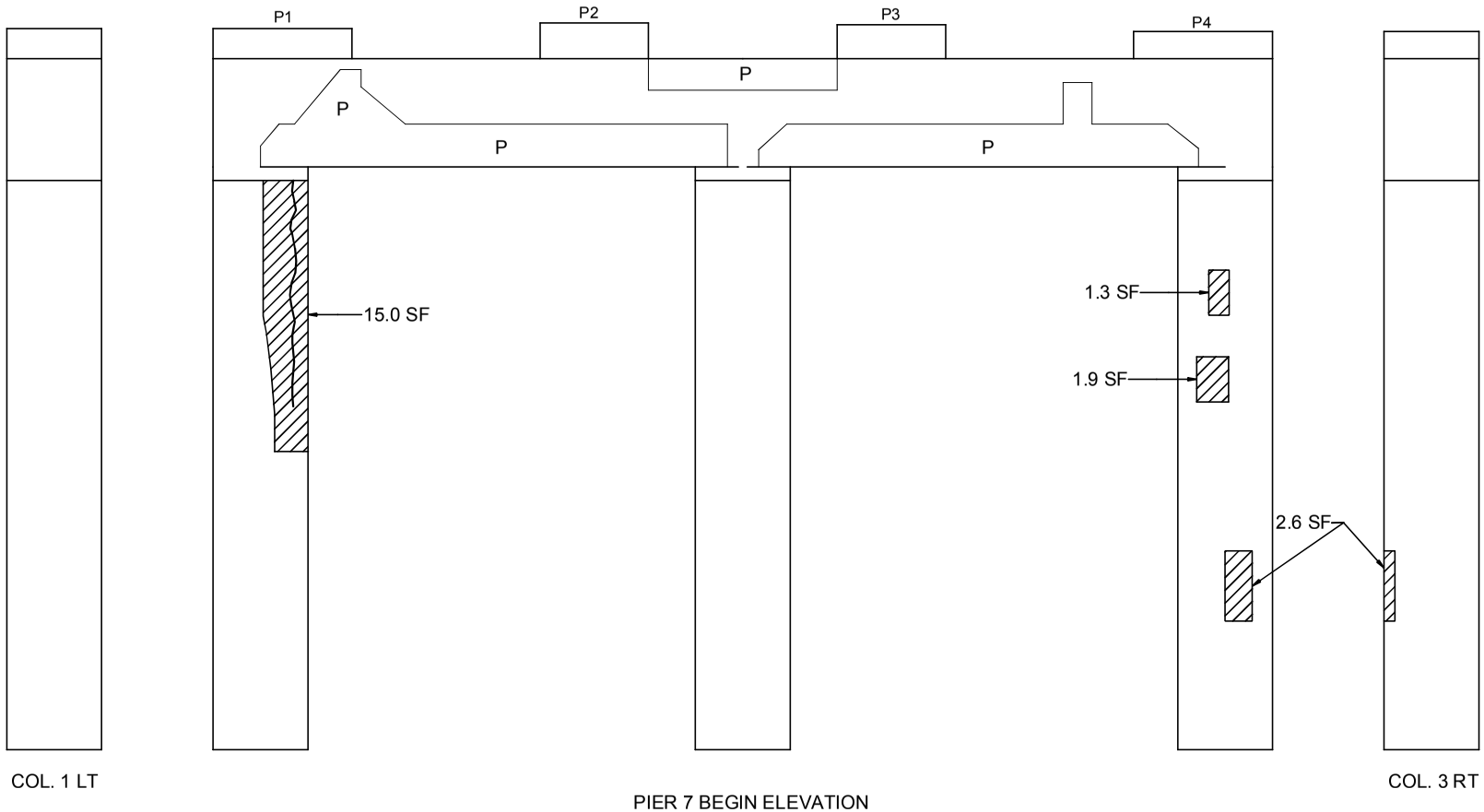

PIER 7 BEGIN ELEVATION

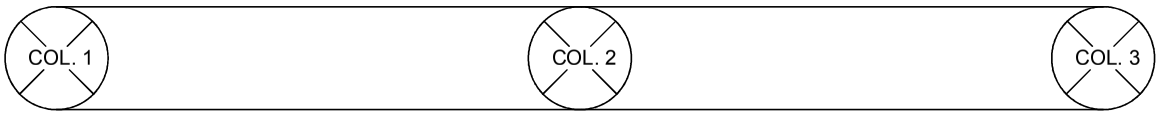

UNDERSIDE OF CAPBEAM

TOTAL DAMAGED AREA EQUALS 22.7 SF WHICH IS 1.7% OF PIER SURFACE

LEGEND
Hollow Concrete (HC)
Spall (S)
P Patch
Crack (C)
Hairline Crack (HL)

BIN: 1093572
I481 NB / CSX TRANS/AMTRAK

PIER 7 DETERIORATION SKETCH

NOT TO SCALE

P4 LT | P3 RT | P3 LT | P2 RT | P2 LT | P1 RT

* NOTE: P1 LT & P4 RT VIEWS LOCATED ON PIER 7 DETERIORATION SKETCH SHEET 1 OF 2

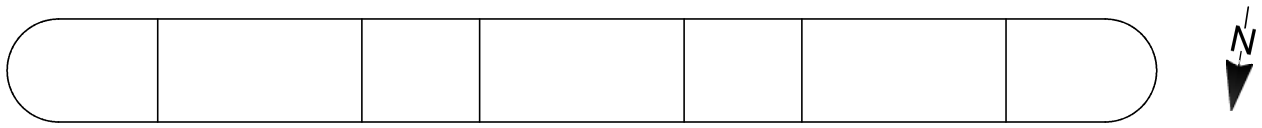

PLAN

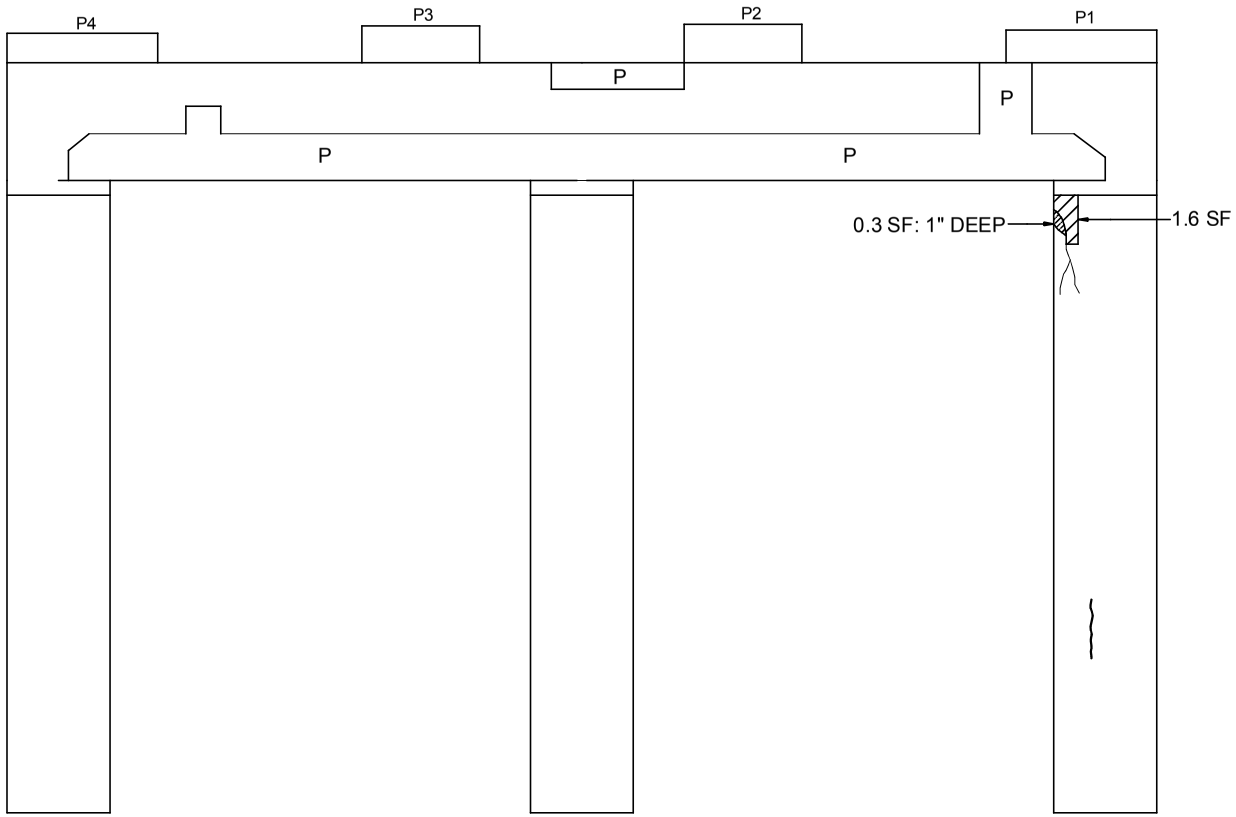

PIER 7 END ELEVATION

TOTAL DAMAGED AREA EQUALS 22.7 SF
WHICH IS 1.7% OF PIER SURFACE

LEGEND
Hollow Concrete (HC)
Spall (S)
P Patch
Crack (C)
Hairline Crack (HL)

BIN: 1093572
I481 NB / CSX TRANS/AMTRAK

PIER 8 DETERIORATION SKETCH

NOT TO SCALE

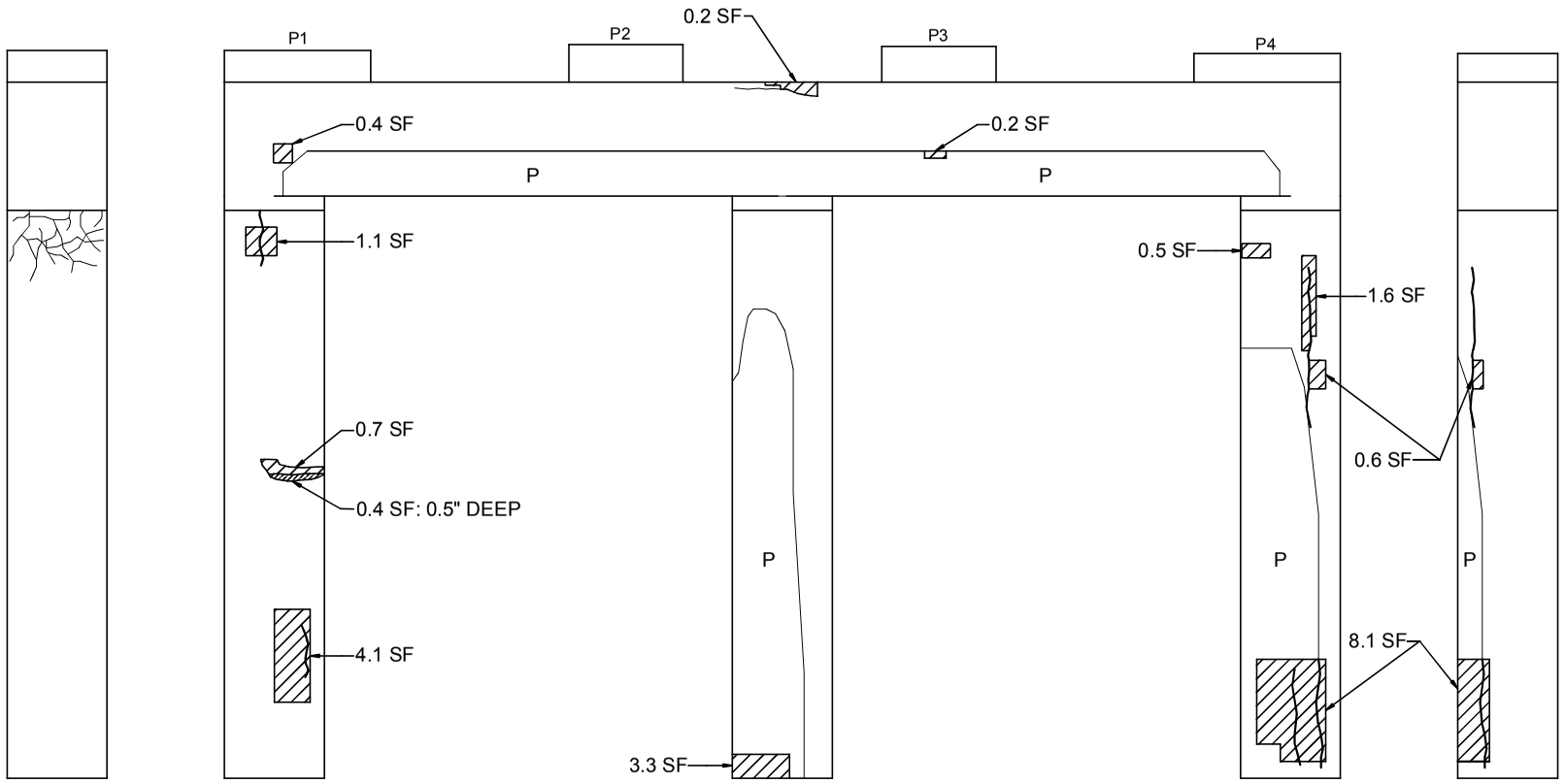

PIER 8 BEGIN ELEVATION

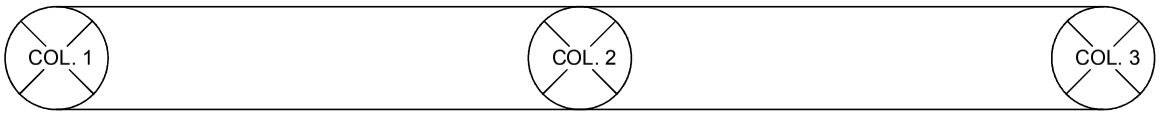

UNDERSIDE OF CAPBEAM

LEGEND
Hollow Concrete (HC)
Spall (S)
P Patch
Crack (C)
Hairline Crack (HL)

TOTAL DAMAGED AREA EQUALS 29.9 SF WHICH IS 2.3% OF PIER SURFACE

BIN: 1093572
I481 NB / CSX TRANS/AMTRAK

PIER 8 DETERIORATION SKETCH

NOT TO SCALE

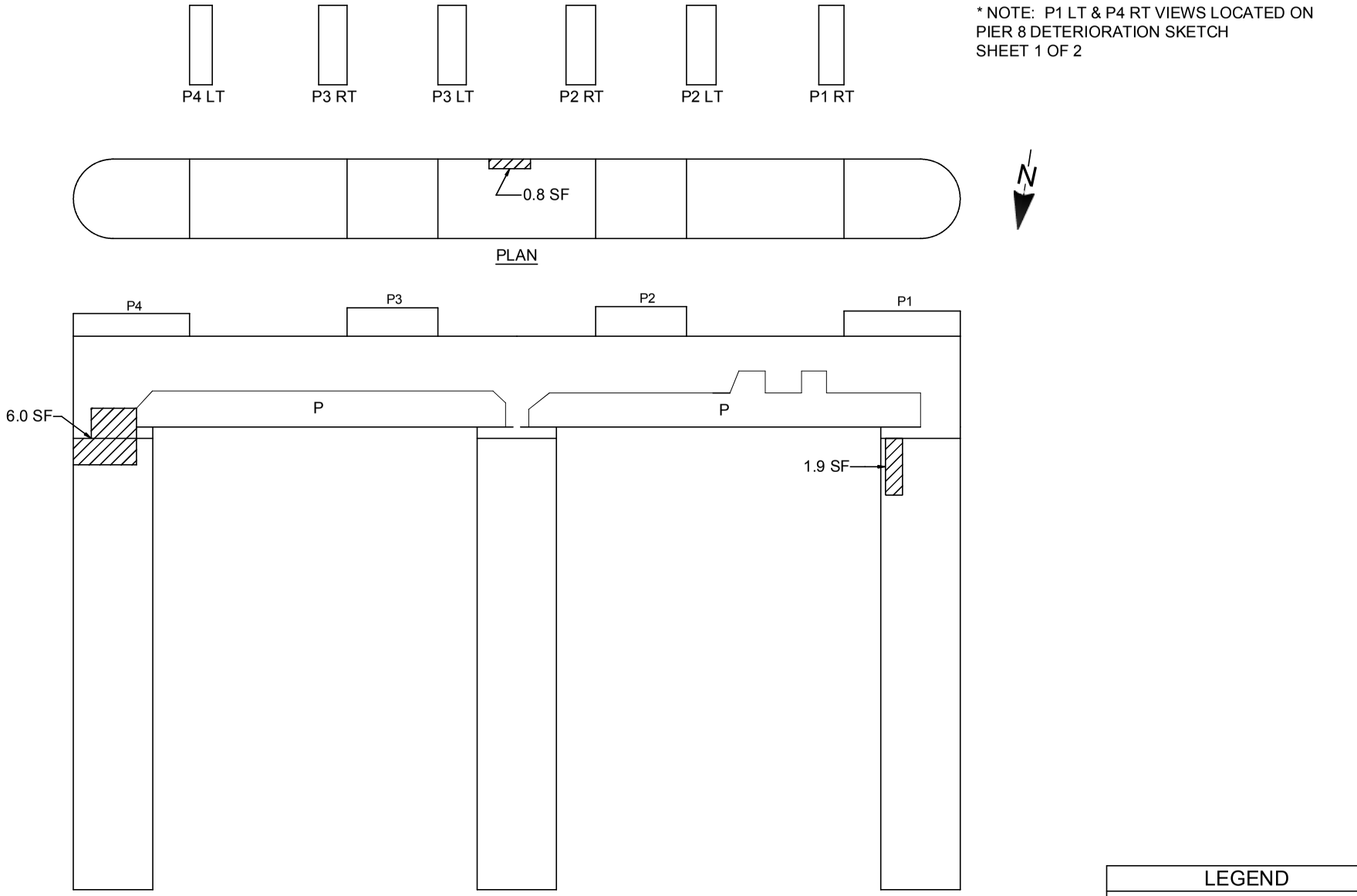

* NOTE: P1 LT & P4 RT VIEWS LOCATED ON PIER 8 DETERIORATION SKETCH SHEET 1 OF 2

PIER 8 END ELEVATION

TOTAL DAMAGED AREA EQUALS 29.9 SF
WHICH IS 2.3% OF PIER SURFACE

LEGEND
Hollow Concrete (HC)
Spall (S)
P Patch
Crack (C)
Hairline Crack (HL)

BIN: 1093572
I481 NB / CSX TRANS/AMTRAK

PIER 9 DETERIORATION SKETCH

NOT TO SCALE

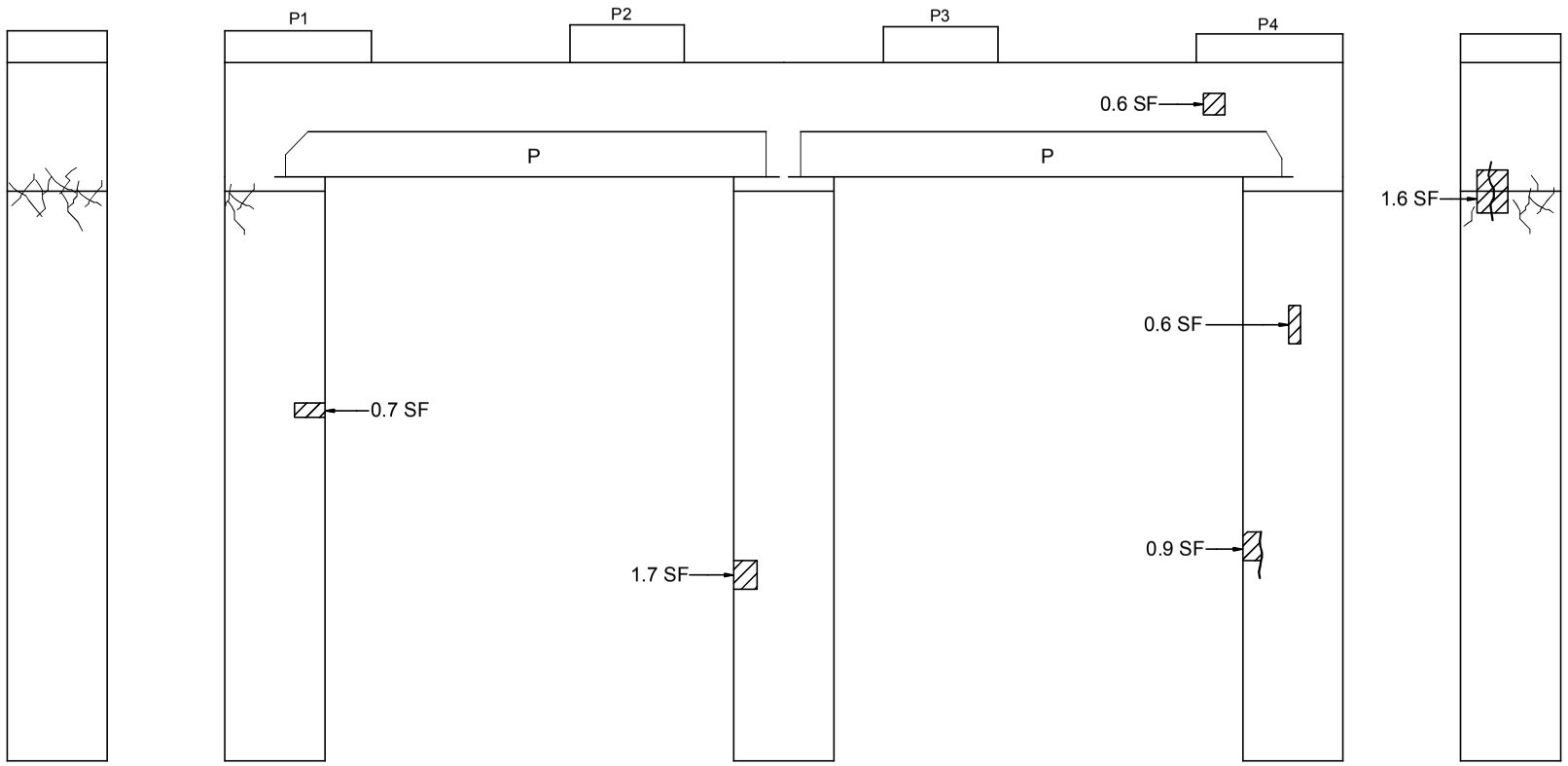

PIER 9 BEGIN ELEVATION

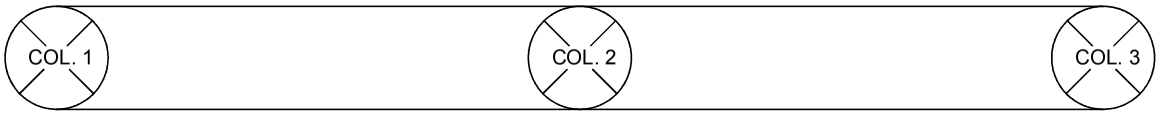

UNDERSIDE OF CAPBEAM

TOTAL DAMAGED AREA EQUALS 12.1 SF WHICH IS 0.9% OF PIER SURFACE

LEGEND
Hollow Concrete (HC)
Spall (S)
P Patch
Crack (C)
Hairline Crack (HL)

BIN: 1093572
I481 NB / CSX TRANS/AMTRAK

PIER 9 DETERIORATION SKETCH

NOT TO SCALE

* NOTE: P1 LT & P4 RT VIEWS LOCATED ON PIER 9 DETERIORATION SKETCH SHEET 1 OF 2

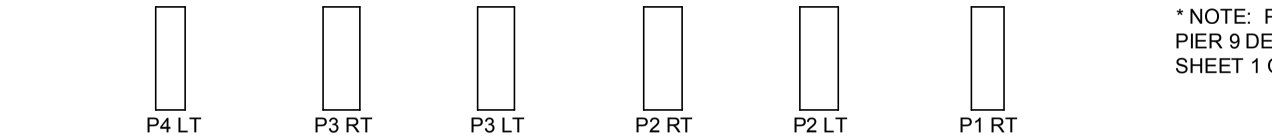



PLAN

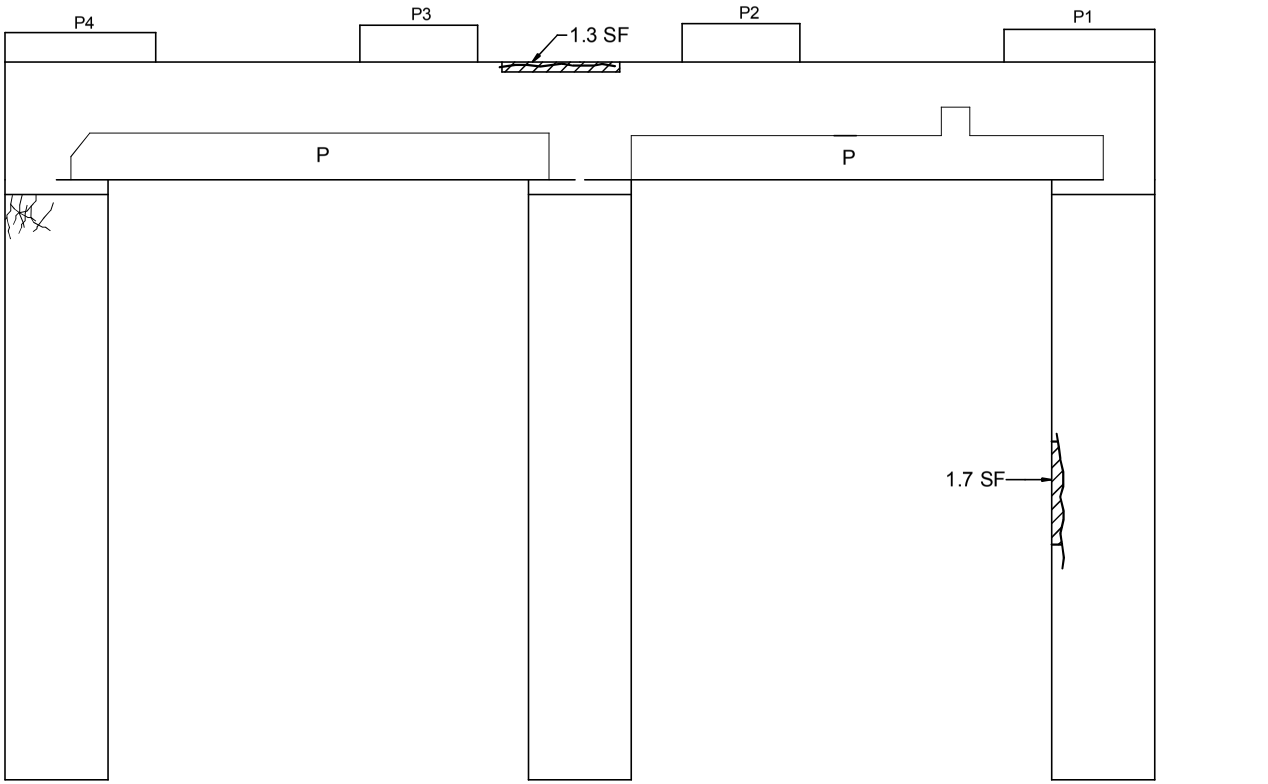

PIER 9 END ELEVATION

TOTAL DAMAGED AREA EQUALS 12.1 SF
WHICH IS 0.9% OF PIER SURFACE

LEGEND	
	Hollow Concrete (HC)
	Spall (S)
P	Patch
	Crack (C)
	Hairline Crack (HL)

BIN: 1093572
I481 NB / CSX TRANS/AMTRAK

PIER 10 DETERIORATION SKETCH

NOT TO SCALE

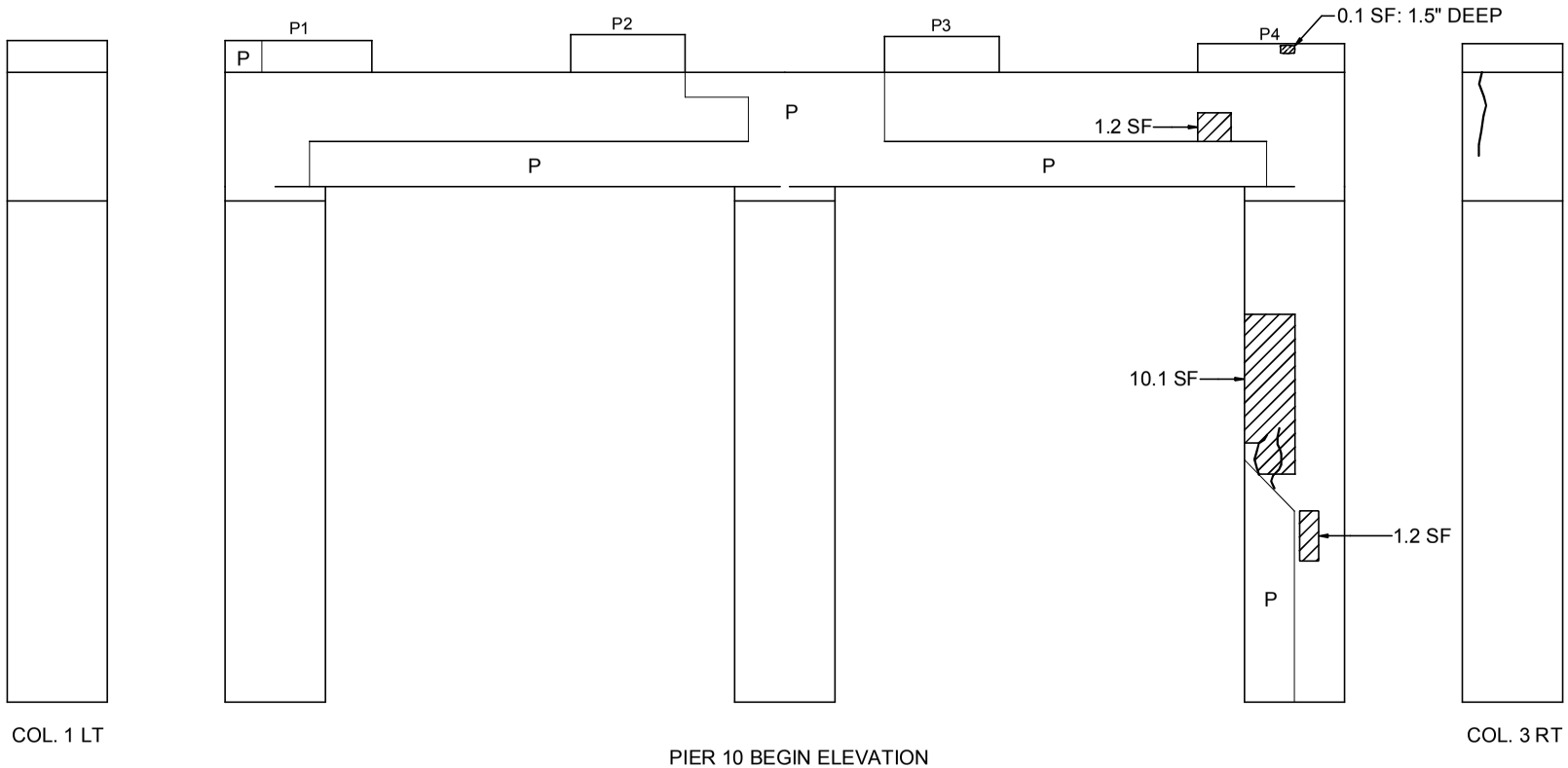

PIER 10 BEGIN ELEVATION

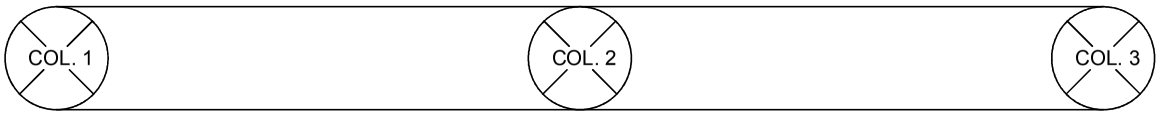

UNDERSIDE OF CAPBEAM

TOTAL DAMAGED AREA EQUALS 16.9 SF WHICH IS 1.4% OF PIER SURFACE

LEGEND
Hollow Concrete (HC)
Spall (S)
P Patch
Crack (C)
Hairline Crack (HL)

BIN: 1093572
I481 NB / CSX TRANS/AMTRAK

PIER 10 DETERIORATION SKETCH

NOT TO SCALE

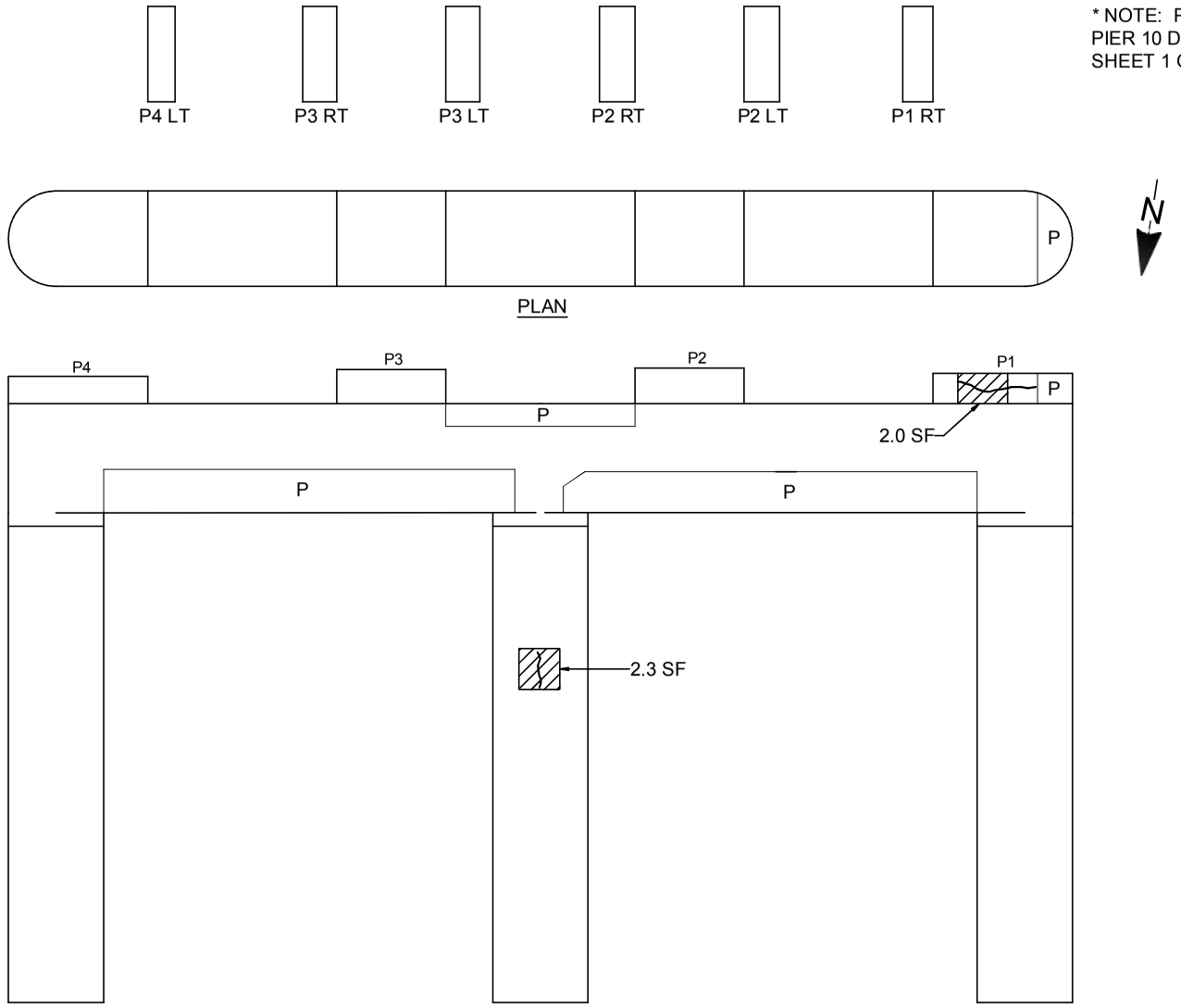

PIER 10 END ELEVATION

* NOTE: P1 LT & P4 RT VIEWS LOCATED ON PIER 10 DETERIORATION SKETCH SHEET 1 OF 2

TOTAL DAMAGED AREA EQUALS 16.9 SF
WHICH IS 1.4% OF PIER SURFACE

LEGEND	
	Hollow Concrete (HC)
	Spall (S)
P	Patch
	Crack (C)
	Hairline Crack (HL)

BIN: 1093572
I481 NB / CSX TRANS/AMTRAK

PIER 11 DETERIORATION SKETCH

NOT TO SCALE

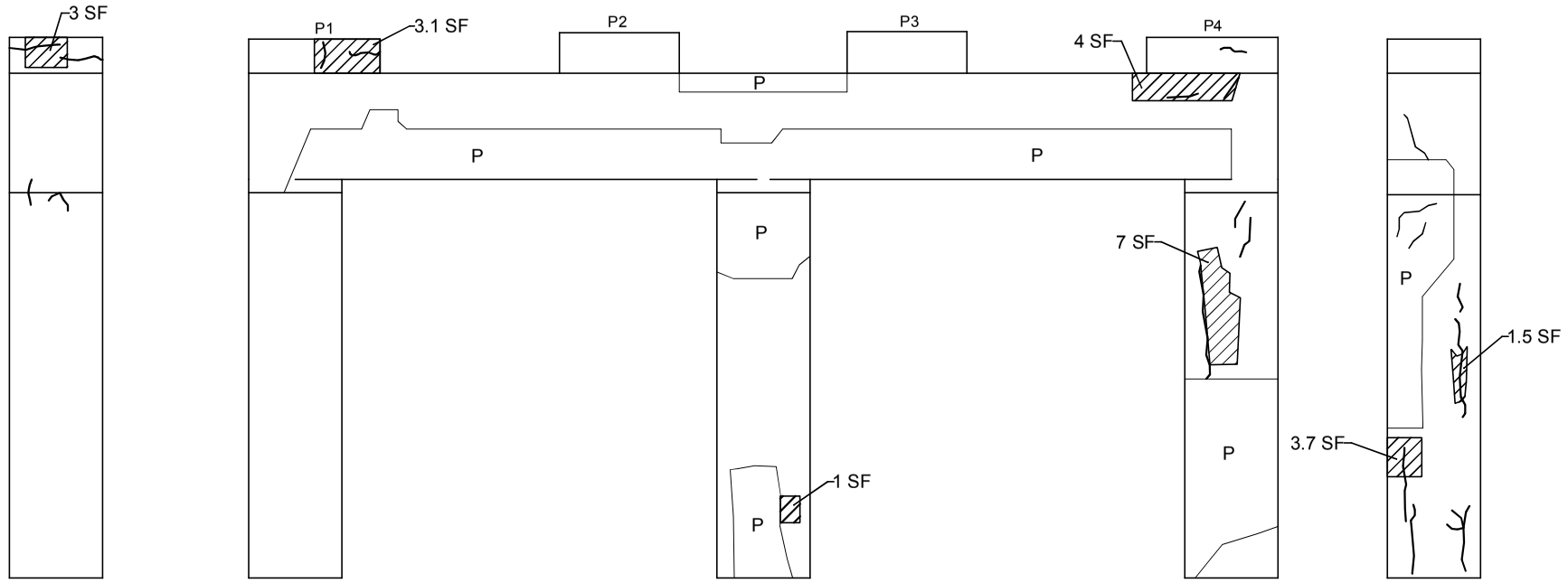

COL. 1 LT

COL. 3 RT

PIER 11 BEGIN ELEVATION

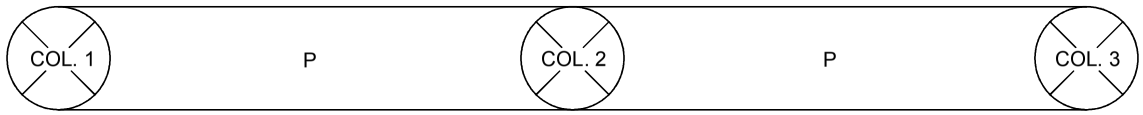

UNDERSIDE OF CAPBEAM

TOTAL DAMAGED AREA EQUALS 45.25 SF WHICH IS 3.6% OF PIER SURFACE

LEGEND

- Hollow Concrete (HC)
- Spall (S)
- P — Patch
- Crack (C)
- Hairline Crack (HL)

BIN: 1093572
I481 NB / CSX TRANS/AMTRAK

PIER 11 DETERIORATION SKETCH

NOT TO SCALE

* NOTE: P1 LT & P4 RT VIEWS LOCATED ON PIER 11 DETERIORATION SKETCH SHEET 1 OF 2

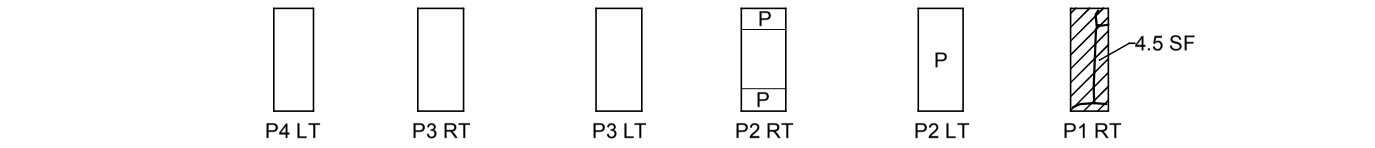

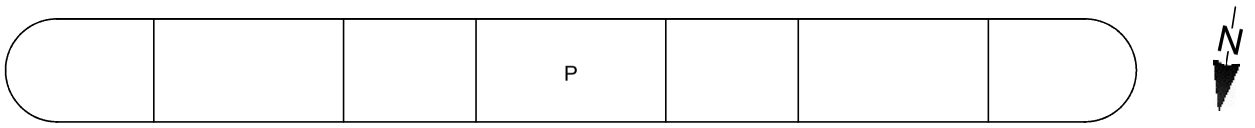

PLAN

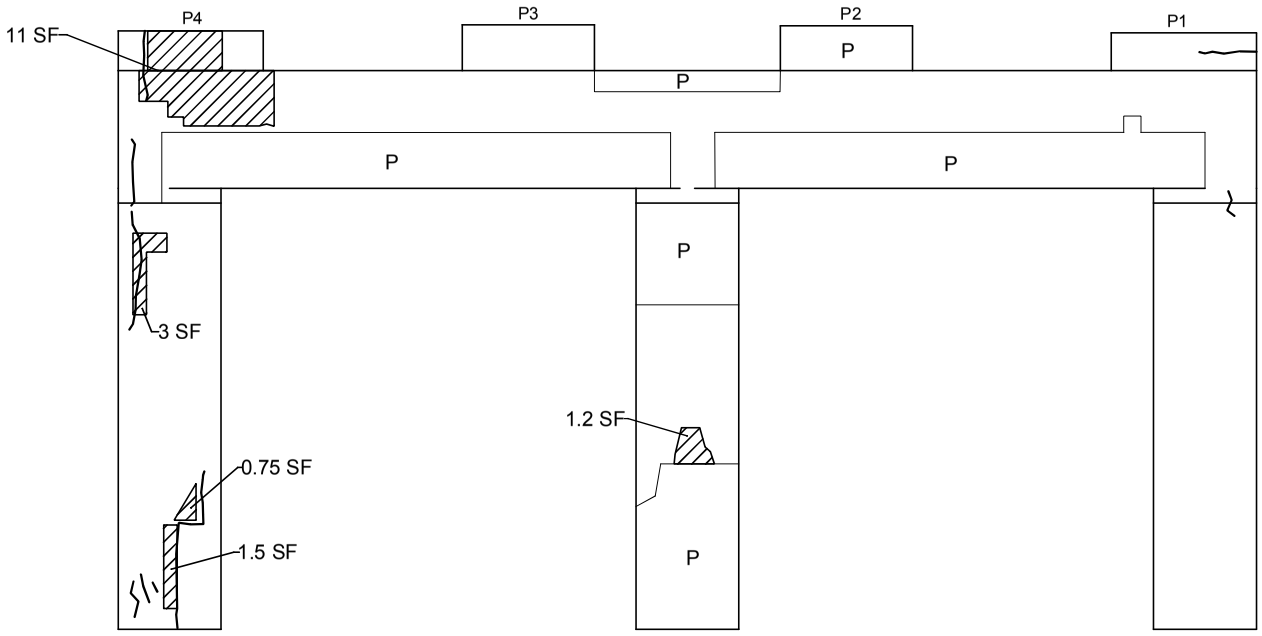

PIER 11 END ELEVATION

TOTAL DAMAGED AREA EQUALS 45.25 SF WHICH IS 3.6% OF PIER SURFACE

LEGEND
Hollow Concrete (HC)
Spall (S)
P Patch
Crack (C)
Hairline Crack (HL)

BIN: 1093572
I481 NB / CSX TRANS/AMTRAK

PIER 12 DETERIORATION SKETCH

NOT TO SCALE

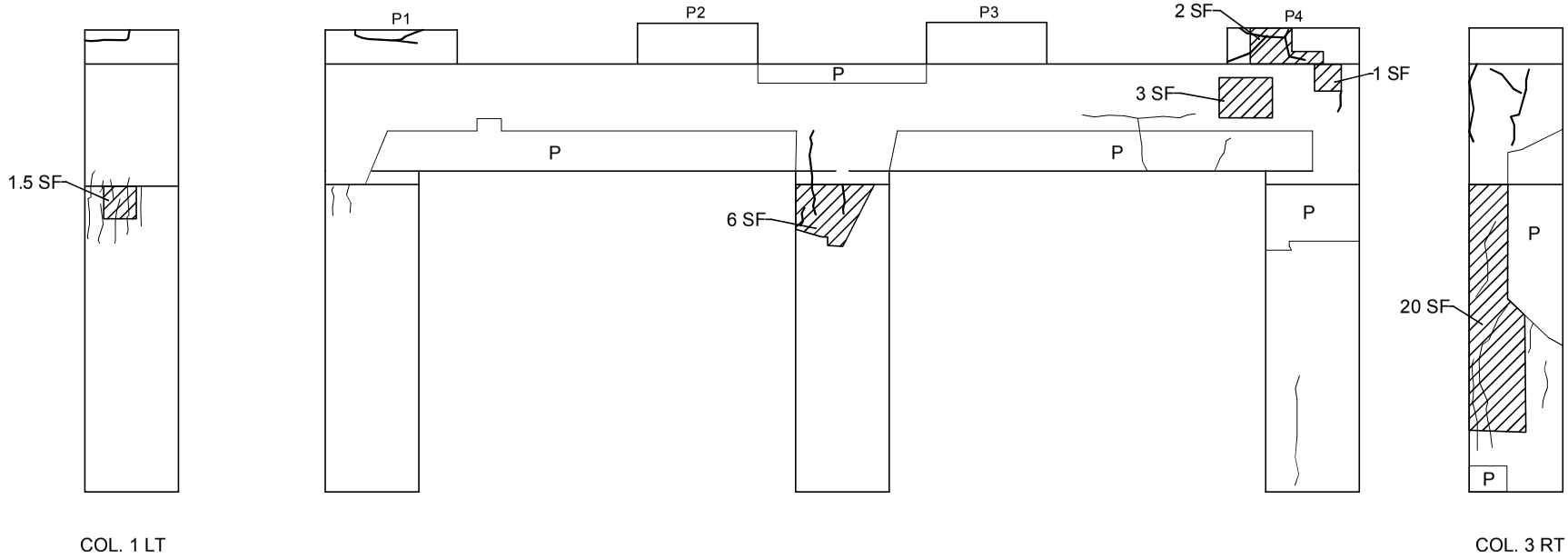

COL. 1 LT

COL. 3 RT

PIER 12 BEGIN ELEVATION

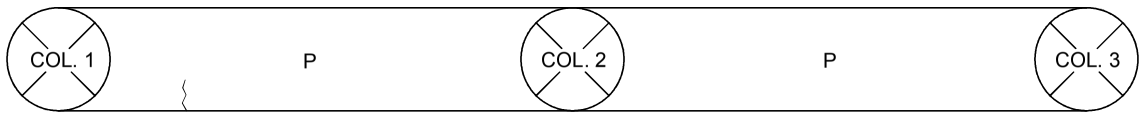

UNDERSIDE OF CAPBEAM

TOTAL DAMAGED AREA EQUALS 62.8 SF WHICH IS 5.4% OF PIER SURFACE

LEGEND
Hollow Concrete (HC)
Spall (S)
P Patch
Crack (C)
Hairline Crack (HL)

BIN: 1093572
I481 NB / CSX TRANS/AMTRAK

PIER 12 DETERIORATION SKETCH

NOT TO SCALE

* NOTE: P1 LT & P4 RT VIEWS LOCATED ON PIER 12 DETERIORATION SKETCH SHEET 1 OF 2

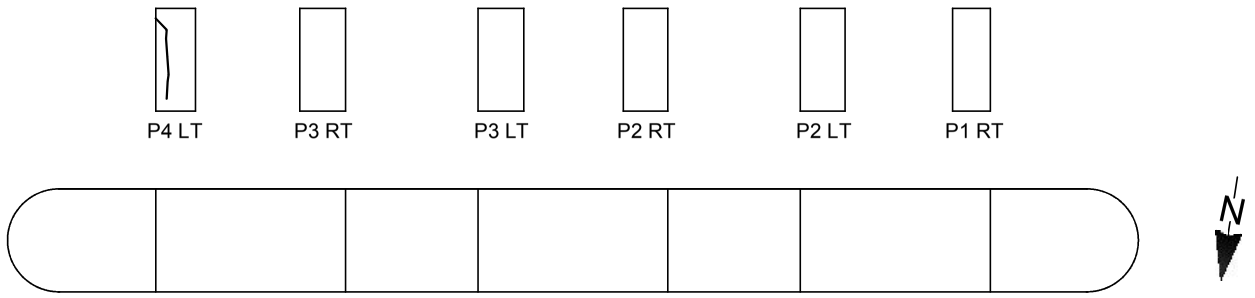

PLAN

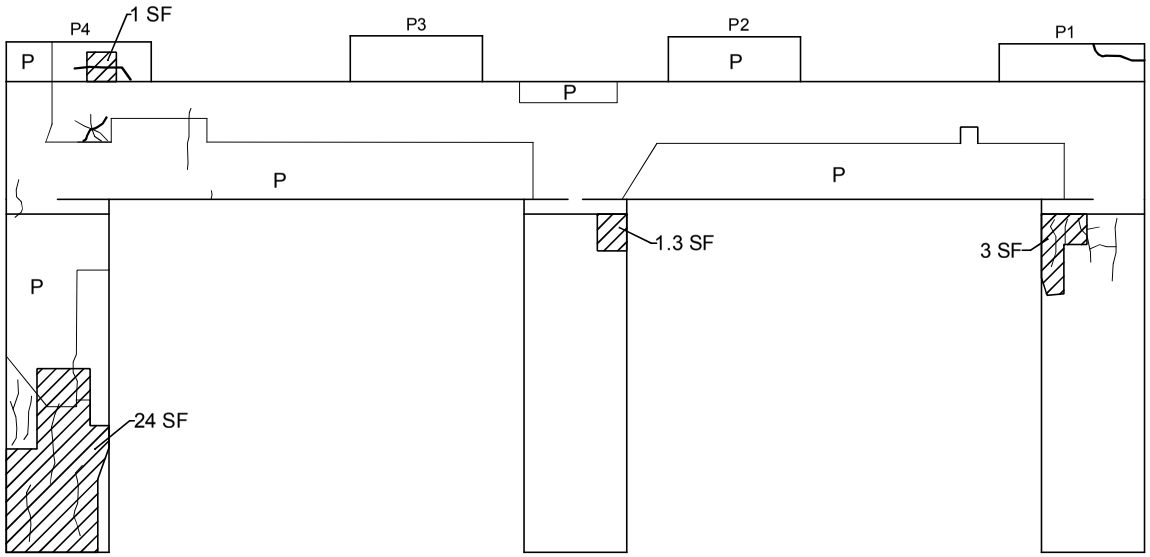

PIER 12 END ELEVATION

TOTAL DAMAGED AREA EQUALS 62.8 SF WHICH IS 5.4% OF PIER SURFACE

LEGEND
Hollow Concrete (HC)
Spall (S)
P Patch
Crack (C)
Hairline Crack (HL)

BIN: 1093572
I481 NB / CSX TRANS/AMTRAK

PIER 13 DETERIORATION SKETCH

NOT TO SCALE

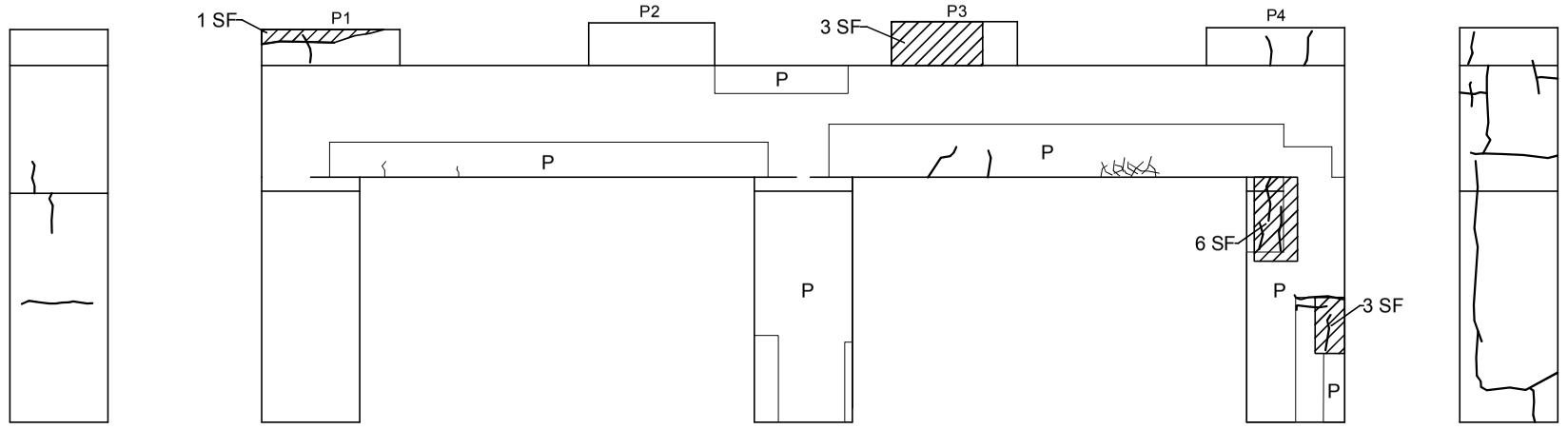

PIER 13 BEGIN ELEVATION

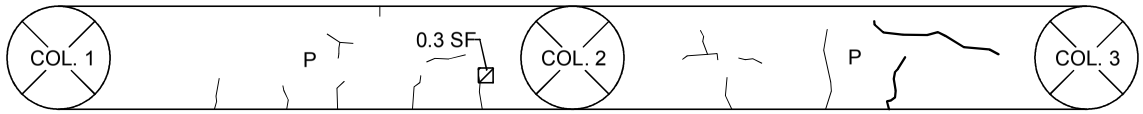

UNDERSIDE OF CAPBEAM

TOTAL DAMAGED AREA EQUALS 25.1 SF WHICH IS 2.4% OF PIER SURFACE

LEGEND
Hollow Concrete (HC)
Spall (S)
P Patch
Crack (C)
Hairline Crack (HL)

BIN: 1093572
I481 NB / CSX TRANS/AMTRAK

PIER 13 DETERIORATION SKETCH

NOT TO SCALE

* NOTE: P1 LT & P4 RT VIEWS LOCATED ON PIER 13 DETERIORATION SKETCH SHEET 1 OF 2

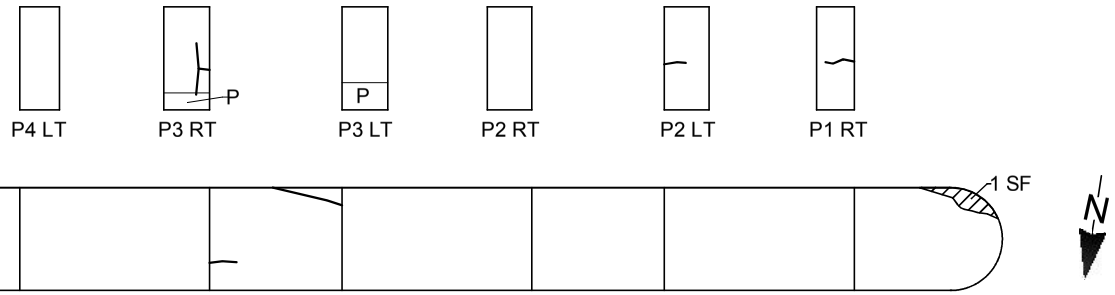

PLAN

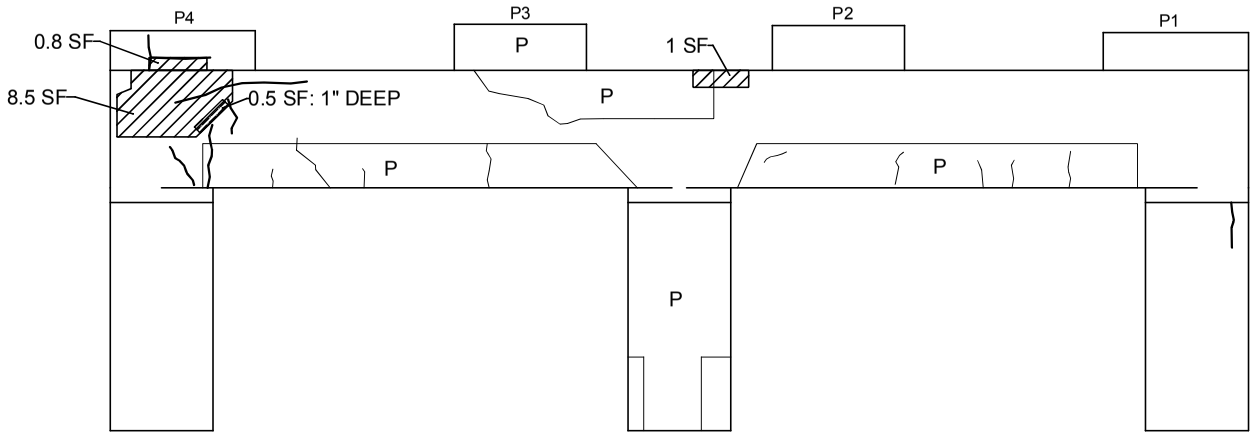

PIER 13 END ELEVATION

TOTAL DAMAGED AREA EQUALS 25.1 SF WHICH IS 2.4% OF PIER SURFACE

LEGEND
Hollow Concrete (HC)
Spall (S)
P Patch
Crack (C)
Hairline Crack (HL)

BIN: 1093572
I481 NB / CSX TRANS/AMTRAK

PIER 14 DETERIORATION SKETCH

NOT TO SCALE

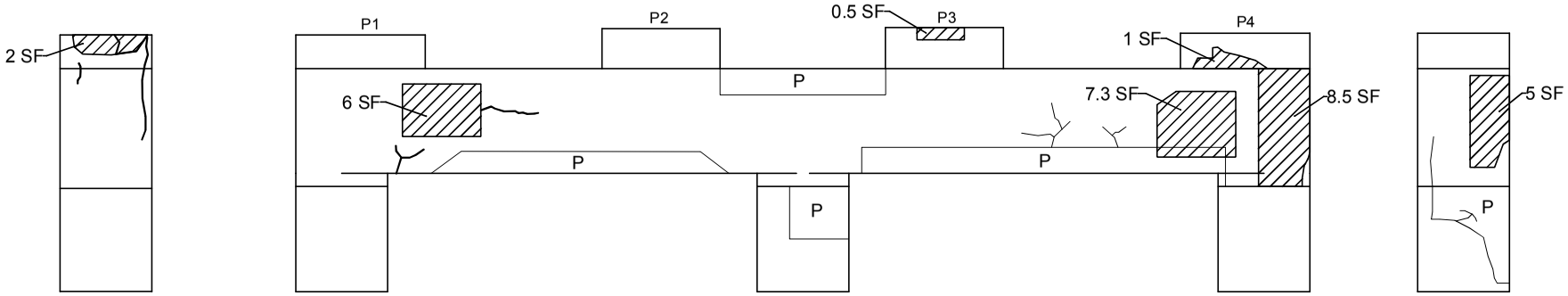

PIER 14 BEGIN ELEVATION

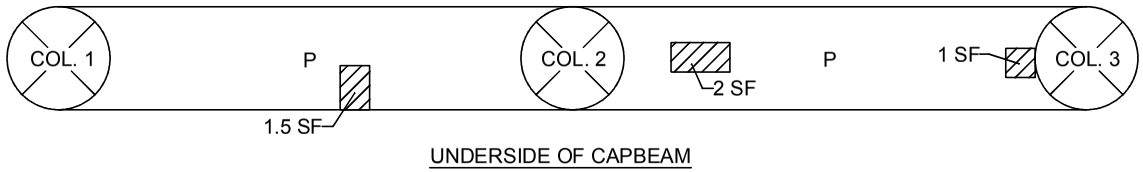

UNDERSIDE OF CAPBEAM

TOTAL DAMAGED AREA EQUALS 44.7 SF WHICH IS 4.9% OF PIER SURFACE

LEGEND
Hollow Concrete (HC)
Spall (S)
P Patch
Crack (C)
Hairline Crack (HL)

BIN: 1093572
I481 NB / CSX TRANS/AMTRAK

PIER 14 DETERIORATION SKETCH

NOT TO SCALE

* NOTE: P1 LT & P4 RT VIEWS LOCATED ON PIER 14 DETERIORATION SKETCH SHEET 1 OF 2

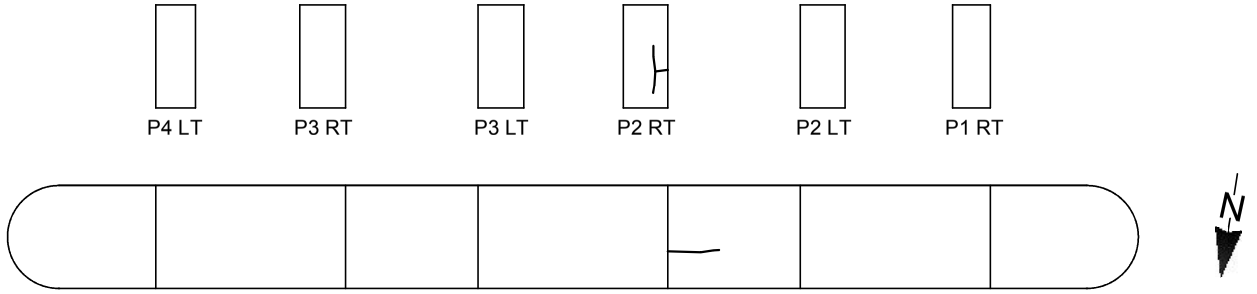

PLAN

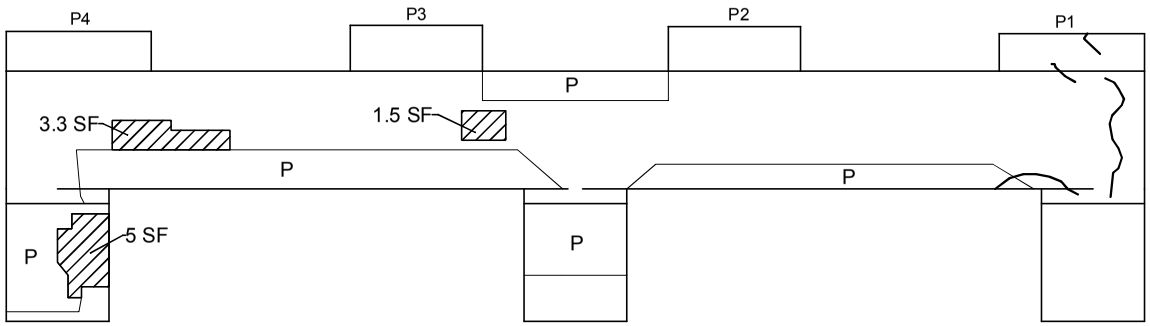

PIER 14 END ELEVATION

TOTAL DAMAGED AREA EQUALS 44.7 SF WHICH IS 4.9% OF PIER SURFACE

LEGEND	
	Hollow Concrete (HC)
	Spall (S)
P	Patch
	Crack (C)
	Hairline Crack (HL)

IN-DEPTH PHOTO DOCUMENTATION

BIN: 1093572
I481 NB / CSX TRANS/AMTRAK

IN DEPTH INSPECTION
PHOTO LOCATION SKETCH

NOT TO SCALE

DATE: 03/24/2014

N

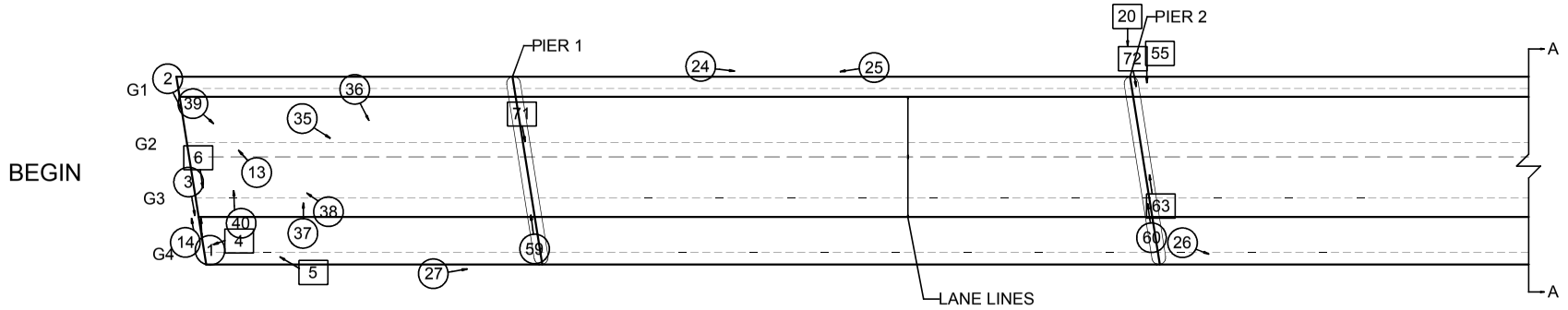

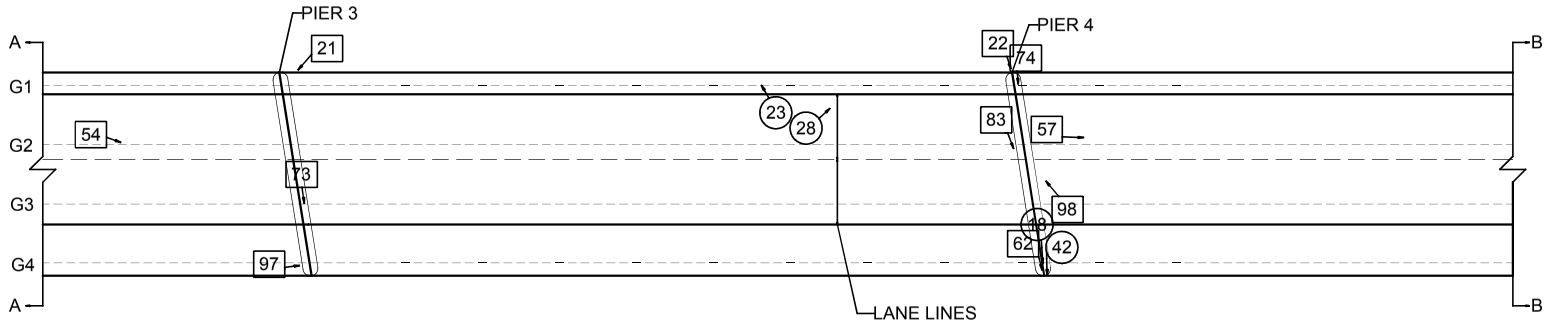

LEGEND	
(XX)	Photo Above Deck
[XX]	Photo Below Deck

BIN: 1093572
I481 NB / CSX TRANS/AMTRAK

IN DEPTH INSPECTION
PHOTO LOCATION SKETCH

NOT TO SCALE

DATE: 03/24/2014

N

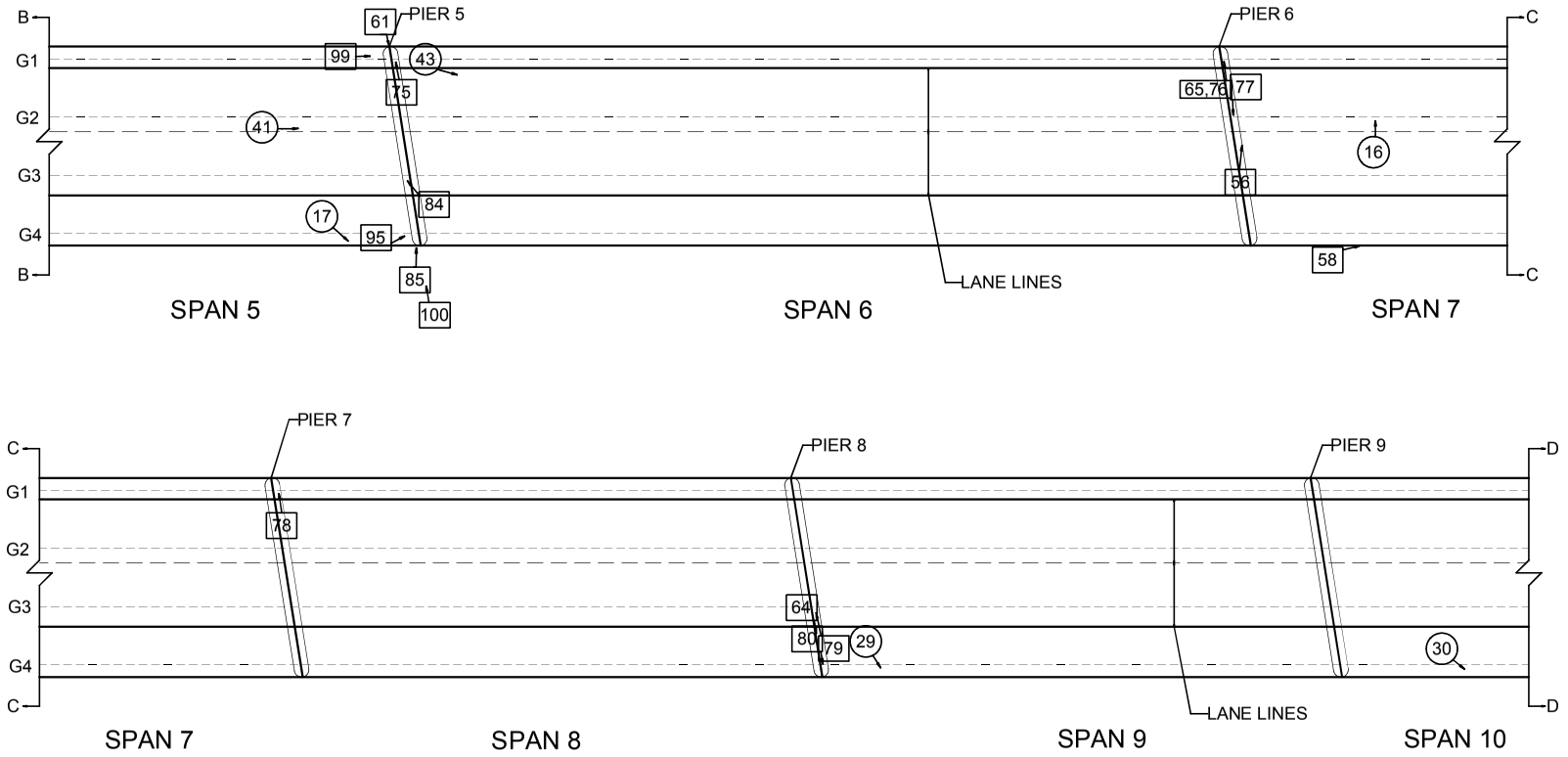

LEGEND	
(XX)	Photo Above Deck
[XX]	Photo Below Deck

BIN: 1093572
I481 NB / CSX TRANS/AMTRAK

IN DEPTH INSPECTION
PHOTO LOCATION SKETCH

NOT TO SCALE

DATE: 03/24/2014

N

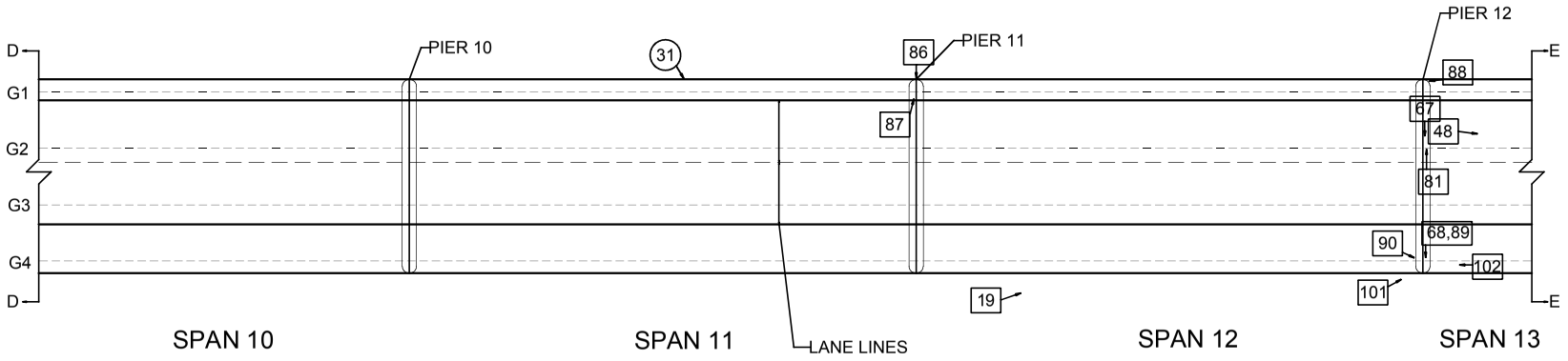

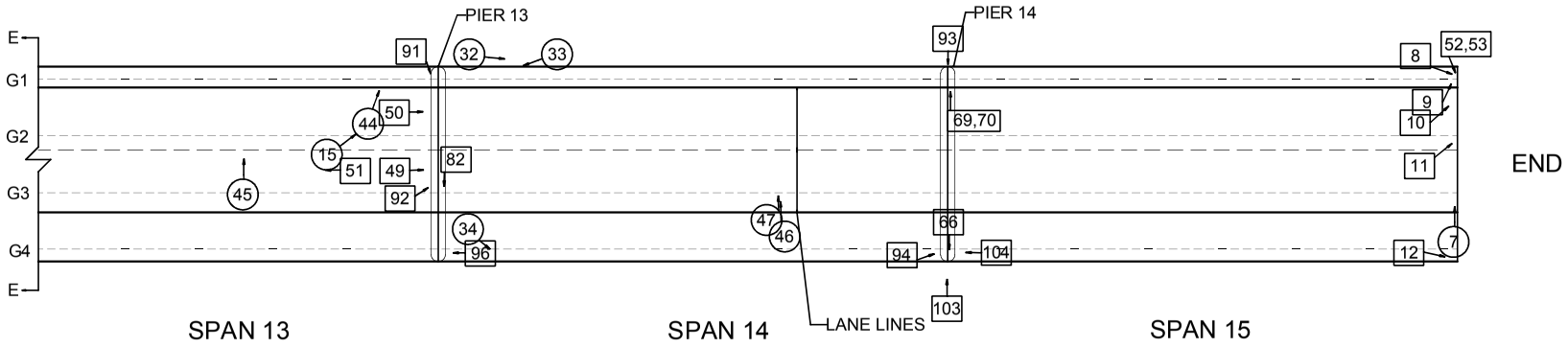

LEGEND	
(XX)	Photo Above Deck
XX	Photo Below Deck



DESCRIPTION: BEGIN APPROACH PAVEMENT – LOOKING FROM RIGHT TO LEFT

PHOTO 1



DESCRIPTION: BEGIN ABUTMENT JOINT WITH DECK – LOOKING FROM LEFT TO RIGHT

PHOTO 2



DESCRIPTION: BEGIN ABUTMENT JOINT WITH DECK – LOOKING FROM LEFT TO RIGHT

PHOTO 3



DESCRIPTION: BEGIN BACKWALL BAY 3

PHOTO 4



DESCRIPTION: BEGIN ABUTMENT – LOOKING FROM END TO BEGIN

PHOTO 5



DESCRIPTION: BEGIN ABUTMENT BEARING B3 – LOOKING FROM LEFT TO RIGHT

PHOTO 6



DESCRIPTION: END ABUTMENT JOINT WITH DECK PAVEMENT TRANSITION HEADER – LOOKING FROM RIGHT TO LEFT

PHOTO 7



DESCRIPTION: END ABUTMENT PEDESTAL P1 LEFT – LOOKING FROM LEFT TO RIGHT

PHOTO 8



DESCRIPTION: END ABUTMENT PEDESTAL P1 RIGHT – LOOKING FROM RIGHT TO LEFT

PHOTO 9



DESCRIPTION: END ABUTMENT BACKWALL BAY 1 – LOOKING FROM RIGHT TO LEFT

PHOTO 10



DESCRIPTION: END ABUTMENT BACKWALL BAY 2 – LOOKING FROM RIGHT TO LEFT

PHOTO 11



DESCRIPTION: END ABUTMENT BACKWALL RIGHT SIDE – LOOKING FROM BEGIN TO END

PHOTO 12



DESCRIPTION: DECK SPAN 1 PATCH AT BEGIN LEFT – LOOKING FROM RIGHT TO LEFT

PHOTO 13



DESCRIPTION: BEGIN APPROACH SETTLEMENT RIGHT LANE – LOOKING FROM RIGHT TO LEFT

PHOTO 14



DESCRIPTION: DECK SPAN 13 PATCH AT END LEFT – LOOKING FROM RIGHT TO LEFT

PHOTO 15



DESCRIPTION: DECK SPAN 7 CORE #7 RIGHT LANE AT 1/3 SPAN – LOOKING FROM RIGHT TO LEFT

PHOTO 16



DESCRIPTION: SPAN 5 PARAPET AND CURB AT END RIGHT – LOOKING FROM LEFT TO RIGHT

PHOTO 17



DESCRIPTION: PIER 4 PARAPET AND CURB AT RIGHT JOINT – LOOKING FROM LEFT TO RIGHT

PHOTO 18



DESCRIPTION: SPAN 12 RIGHT FASCIA – LOOKING FROM BEGIN TO END

PHOTO 19



DESCRIPTION: FASCIA SPAN 3 BEGIN LEFT AT PIER 2 – LOOKING FROM LEFT TO RIGHT

PHOTO 20



DESCRIPTION: SPAN 4 BEGIN LEFT FASCIA

PHOTO 21



DESCRIPTION: SPAN 5 BEGIN LEFT FASCIA

PHOTO 22



DESCRIPTION: LEFT PARAPET SPAN 4 NEAR 2/3 SPAN – LOOKING FROM END TO BEGIN

PHOTO 23



DESCRIPTION: SPAN 2 LEFT PARAPET BETWEEN PEIR 4 AND PIER 5 – LOOKING FROM BEGIN TO END

PHOTO 24



DESCRIPTION: SPAN 2 LEFT PARAPET BETWEEN PIER 7 AND PIER 8 – LOOKING FROM END TO BEGIN

PHOTO 25



DESCRIPTION: SPAN 3 RIGHT PARAPET NEAR BEGIN – LOOKING FROM BEGIN TO END

PHOTO 26



DESCRIPTION: SPAN 1 RIGHT FASCIA AT ¾ SPAN – LOOKING FROM BEGIN TO END

PHOTO 27



DESCRIPTION: SPAN 4 LEFT PARAPET NEAR 2/3 SPAN – LOOKING FROM BEGIN TO END

PHOTO 28



DESCRIPTION: SPAN 9 RIGHT PARAPET NEAR BEGIN – LOOKING FROM BEGIN TO END

PHOTO 29



DESCRIPTION: SPAN 10 RIGHT PARAPET AT 1/3 SPAN – LOOKING FROM BEGIN TO END

PHOTO 30



DESCRIPTION: SPAN 11 LEFT PARAPET NEAR MIDSPAN – LOOKING FROM BEGIN TO END

PHOTO 31



DESCRIPTION: SPAN 14 LEFT PARAPET 5 FEET FROM BEGIN – LOOKING FROM BEGIN TO END

PHOTO 32



DESCRIPTION: SPAN 14 LEFT PARAPET AT 1/3 SPAN – LOOKING FROM END TO BEGIN

PHOTO 33



DESCRIPTION: SPAN 14 PARAPET AT BEGIN RIGHT – LOOKING FROM BEGIN TO END

PHOTO 34



DESCRIPTION: DECK SPAN 1 LEFT LANE MIDSPAN – LOOKING FROM LEFT TO RIGHT

PHOTO 35



DESCRIPTION: DECK SPAN 1 LEFT LANE NEAR MIDSPAN – LOOKING FROM LEFT TO RIGHT

PHOTO 36



DESCRIPTION: DECK SPAN 1 HOLLOW AREA AND CORE C3 RIGHT LANE AT 1/3 SPAN – LOOKING FROM RIGHT TO LEFT

PHOTO 37



DESCRIPTION: DECK SPAN 1 CRACK RIGHT LANE AT 1/3 SPAN – LOOKING FROM RIGHT TO LEFT

PHOTO 38



DESCRIPTION: DECK SPAN 1 LEFT LANE – LOOKING FROM BEGIN TO END

PHOTO 39



DESCRIPTION: DECK SPAN 1 PATCH AT BEGIN RIGHT – LOOKING FROM RIGHT TO LEFT

PHOTO 40



DESCRIPTION: DECK SPAN 5 CONSTRUCTION JOINT CRACK NEAR END AT CENTERLINE – LOOKING FROM BEGIN TO END

PHOTO 41



DESCRIPTION: DECK SPAN 5 BEGIN AT PIER 4 JOINT RIGHT SIDE – LOOKING FROM LEFT TO RIGHT

PHOTO 42



DESCRIPTION: DECK SPAN 6 PATCH LEFT LANE AT BEGIN -- LOOKING FROM BEGIN TO END

PHOTO 43



DESCRIPTION: DECK SPAN 13 AT END LEFT – LOOKING FROM RIGHT TO LEFT

PHOTO 44



DESCRIPTION: DECK SPAN 13 PATCH 2/3 SPAN RIGHT LANE – LOOKING FROM RIGHT TO LEFT

PHOTO 45



DESCRIPTION: DECK SPAN 14 2/3 SPAN – LOOKING FROM RIGHT TO LEFT

PHOTO 46



DESCRIPTION: DECK SPAN 14 2/3 SPAN – LOOKING FROM RIGHT TO LEFT

PHOTO 47



DESCRIPTION: SPAN 14 FRAMING – LOOKING FROM BEGIN TO END

PHOTO 48



DESCRIPTION: DECK SPAN 13 BAY 2 END – LOOKING FROM BEGIN TO END

PHOTO 49



DESCRIPTION: DECK SPAN 13 BAY 1 END – LOOKING FROM BEGIN TO END

PHOTO 50



DESCRIPTION: DECK SPAN 13 BAY 2 NEAR END – LOOKING FROM END TO BEGIN

PHOTO 51



DESCRIPTION: SPAN 15 GIRDER G1 END LEFT – LOOKING FROM LEFT TO RIGHT

PHOTO 52



DESCRIPTION: SPAN 15 GIRDER G1 END LEFT – LOOKING FROM LEFT TO RIGHT

PHOTO 53



DESCRIPTION: SPAN 3 GIRDER G2 LEFT AT ¾ SPAN AND 2ND LAST DIAPHRAGM – LOOKING FROM BEGIN TO END

PHOTO 54



DESCRIPTION: PIER 2 BEARINGS FROM END LEFT

PHOTO 55



DESCRIPTION: PIER 6 SPAN 7 BAY 2 BEGIN DIAPHRAGM – LOOKING FROM RIGHT TO LEFT

PHOTO 56



DESCRIPTION: SPAN 5 BAY 1 – LOOKING FROM BEGIN TO END

PHOTO 57



DESCRIPTION: SPAN 7 RIGHT FASCIA – LOOKING FROM BEGIN TO END

PHOTO 58



DESCRIPTION: SPAN 1 JOINT – LOOKING FROM RIGHT TO LEFT

PHOTO 59



DESCRIPTION: SPAN 2 JOINT – LOOKING FROM RIGHT TO LEFT

PHOTO 60



DESCRIPTION: PIER 5 LEFT JOINT

PHOTO 61



DESCRIPTION: PIER 4 PEDESTAL P4 LEFT

PHOTO 62



DESCRIPTION: PIER 2 JOINT BAY 3 – LOOKING FROM RIGHT TO LEFT

PHOTO 63



DESCRIPTION: PIER 8 JOINT BAY 3 – LOOKING FROM LEFT TO RIGHT

PHOTO 64



DESCRIPTION: PIER 6 LEFT JOINT

PHOTO 65



DESCRIPTION: PIER 14 JOINT NEAR GIRDER G4 – LOOKING FROM LEFT TO RIGHT

PHOTO 66



DESCRIPTION: SPAN 12 JOINT BAY 1 – LOOKING FROM LEFT TO RIGHT

PHOTO 67



DESCRIPTION: PIER 12 BEARING B4 LEFT SIDE – LOOKING FROM LEFT TO RIGHT

PHOTO 68



DESCRIPTION: PIER 14 JOINT NEAR GIRDER G1 – LOOKING FROM RIGHT TO LEFT

PHOTO 69



DESCRIPTION: PIER 14 JOINT LEAK AT GIRDER G1 – LOOKING FROM RIGHT TO LEFT

PHOTO 70



DESCRIPTION: PIER 1 BEARING B2 LEFT SIDE

PHOTO 71



DESCRIPTION: PIER 2 BEARING B1 LEFT SIDE

PHOTO 72



DESCRIPTION: PIER 3 BEARING B3 LEFT SIDE

PHOTO 73



DESCRIPTION: PIER 4 BEARGIN B1 LEFT SIDE

PHOTO 74



DESCRIPTION: PIER 5 BEARING B1 RIGHT SIDE

PHOTO 75



DESCRIPTION: PIER 6 BEARING B1 RIGHT SIDE

PHOTO 76



DESCRIPTION: PIER 6 BEARING B2 LEFT SIDE

PHOTO 77



DESCRIPTION: PIER 7 BEARING B1 RIGHT SIDE

PHOTO 78



DESCRIPTION: PIER 7 BEARING B1 RIGHT SIDE

PHOTO 79



DESCRIPTION: PIER 8 BEARING B4 LEFT SIDE

PHOTO 80



DESCRIPTION: PIER 12 BEARING B2 RIGHT SIDE

PHOTO 81



DESCRIPTION: PIER 13 BEARING B3 LEFT SIDE

PHOTO 82



DESCRIPTION: PIER 4 PEDESTAL P2 BEGIN – LOOKING FROM LEFT TO RIGHT

PHOTO 83



DESCRIPTION: PIER 5 PEDESTAL P3 RIGHT SIDE

PHOTO 84



DESCRIPTION: PIER 5 PEDESTAL P4 RIGHT SIDE

PHOTO 85



DESCRIPTION: PIER 11 PEDESTAL P1 LEFT SIDE – LOOKING FROM LEFT TO RIGHT

PHOTO 86



DESCRIPTION: PIER 11 PEDESTAL P1 RIGHT SIDE – LOOKING FROM RIGHT TO LEFT

PHOTO 87



DESCRIPTION: PIER 12 PEDESTAL P1 END LEFT – LOOKING FROM LEFT TO RIGHT

PHOTO 88



DESCRIPTION: PIER 12 PEDESTAL P4 LEFT SIDE – LOOKING FROM LEFT TO RIGHT

PHOTO 89



DESCRIPTION: PIER 12 PEDESTAL P4 BEGIN LEFT SIDE – LOOKING FROM LEFT TO RIGHT

PHOTO 90



DESCRIPTION: PIER 13 PEDESTAL P1 BEGIN LEFT SIDE

PHOTO 91



DESCRIPTION: PIER 13 PEDESTAL P3 BEGIN LEFT SIDE

PHOTO 92



DESCRIPTION: PIER 14 PEDESTAL P1 LEFT SIDE

PHOTO 93



DESCRIPTION: PIER 14 CAP BEAM BEGIN RIGHT UNDER GIRDER G4

PHOTO 94



DESCRIPTION: PIER 5 CAP BEAM AT BEGIN RIGHT

PHOTO 95



DESCRIPTION: PIER 13 CAP BEAM AT END RIGHT – LOOKING FROM END TO BEGIN

PHOTO 96



DESCRIPTION: PIER 3 BEGIN RIGHT STEM

PHOTO 97



DESCRIPTION: PIER 4 END RIGHT STEM

PHOTO 98



DESCRIPTION: PIER 5 BEGIN FACE COLUMN C1

PHOTO 99



DESCRIPTION: PIER 5 RIGHT FACE COLUMN C3

PHOTO 100



DESCRIPTION: PIER 12 COLUMN C3 BEGIN RIGHT SIDE – LOOKING FROM RIGHT TO LEFT

PHOTO 101



DESCRIPTION: PIER 12 COLUMN C3 END FACE – LOOKING FROM END TO BEGIN

PHOTO 102



DESCRIPTION: PIER 14 COLUMN C3 RIGHT SIDE

PHOTO 103



DESCRIPTION: PIER 14 COLUMN C3 END SIDE

PHOTO 104

ASBESTOS SAMPLING SURVEY

Asbestos Sampling Survey

Location:
BIN 1-09357-2
Interstate Route 481 North Bound over Conrail

Prepared for:
New York State
Department of Transportation

PIN 3804.00.101

LaBella Project No. 97132

May, 1998

Table of Contents

Page

I. Project Summary 1

II. Site Description 1

III. Inspection Procedures 1

IV. Results 2

Certification 2

Figures and Table

I. Project Summary

In accordance with conditions of Term Agreement D010010, LaBella Associates, P.C. conducted an asbestos sampling survey of the Interstate Route 481 North Bound Bridge over Conrail. Based on laboratory analyses of bulk samples collected, the following materials were determined to contain asbestos:

BIN 1-09357-2 Interstate Route 481 North Bound over Conrail

Type of Material	Estimated Amount
Sheet Packing	7 Square Meters
Caulking Compound	45.7 Linear Meters

II. Site Description

The Site is located in Onondaga County, New York. For the purpose of this report, the Site consists of the Interstate Route 481 North Bound Bridge over Conrail (See attached FIGURE 1 - Site Location Map).

III. Inspection Procedures

The following procedures were used to obtain the data for this Report:

A. A review of record drawings supplied by Region 3 personnel and a visual inspection of the subject structure were conducted to identify potential visible/accessible sources of asbestos-containing materials. Observations and notes were made to provide a description of the structure, and an estimate of the approximate amount, length, or area of ACM present.

B. Physical or operational constraints which might affect the removal of the ACM were identified and reported.

C. Bulk samples of suspected ACM were collected during the site inspection of the subject structure. Samples were taken from each homogeneous area that may contain ACM.

D. Samples were submitted for analysis. Preliminary PLM analyses of NOB materials were performed by LaBella Laboratories, a NYSDOH approved laboratory, to determine the presence and percentage of asbestos in each sample. TEM analyses of NOB materials, if necessary, were performed by EMSL Analytical, Inc. or New York Testing Laboratories, Inc.

E. Lab results were used to determine the approximate location, type, and amount of the verified ACM.

F. A drawing of the structure at the Site was created, in order to show sample locations and the approximate locations and amounts of confirmed ACM observed in accessible locations.

Only accessible areas were inspected. Inaccessible areas, such as areas within the bridge or the approaches to the bridge were not included in this inspection. No investigation was conducted by LaBella Associates to determine the presence of underground utilities on or in the immediate vicinity of the Site. Actual sample locations are shown in the attached FIGURE 2. Results of bulk sample analyses are tabulated in the attached TABLE.

IV. Results

BIN 1-09357-2 Interstate Route 481 North Bound over Conrail

Sheet Packing

Asbestos-containing sheet packing is located between the tops of the abutments and the deck slab at both ends of the bridge. Most of this material is presently covered by the bridge deck, although the edges of this sheet packing are exposed and visible at various locations.

It is estimated that the total amount of this asbestos-containing sheet packing material on the bridge is approximately 7 square meters. This estimate is based on field measurements taken at the time of the site visit.

The approximate locations of this asbestos-containing sheet packing are shown in FIGURE 2.

Caulking Compound

Asbestos-containing caulking compound is located around some of the guide rail base plates on both parapets on the bridge. It is estimated that the total amount of this caulking compound is approximately 45.7 linear meters. This estimate is based on field measurements taken at the time of the site visit.

The approximate locations of this material are shown in the attached FIGURE 2. Analytical results of bulk samples collected are summarized in the attached TABLE.

Certification

LaBella Associates, P.C. certifies the accuracy of this report, to the best of our knowledge, based on the information collected as described in the Inspection Procedures Section of this investigation.

Figures & Table

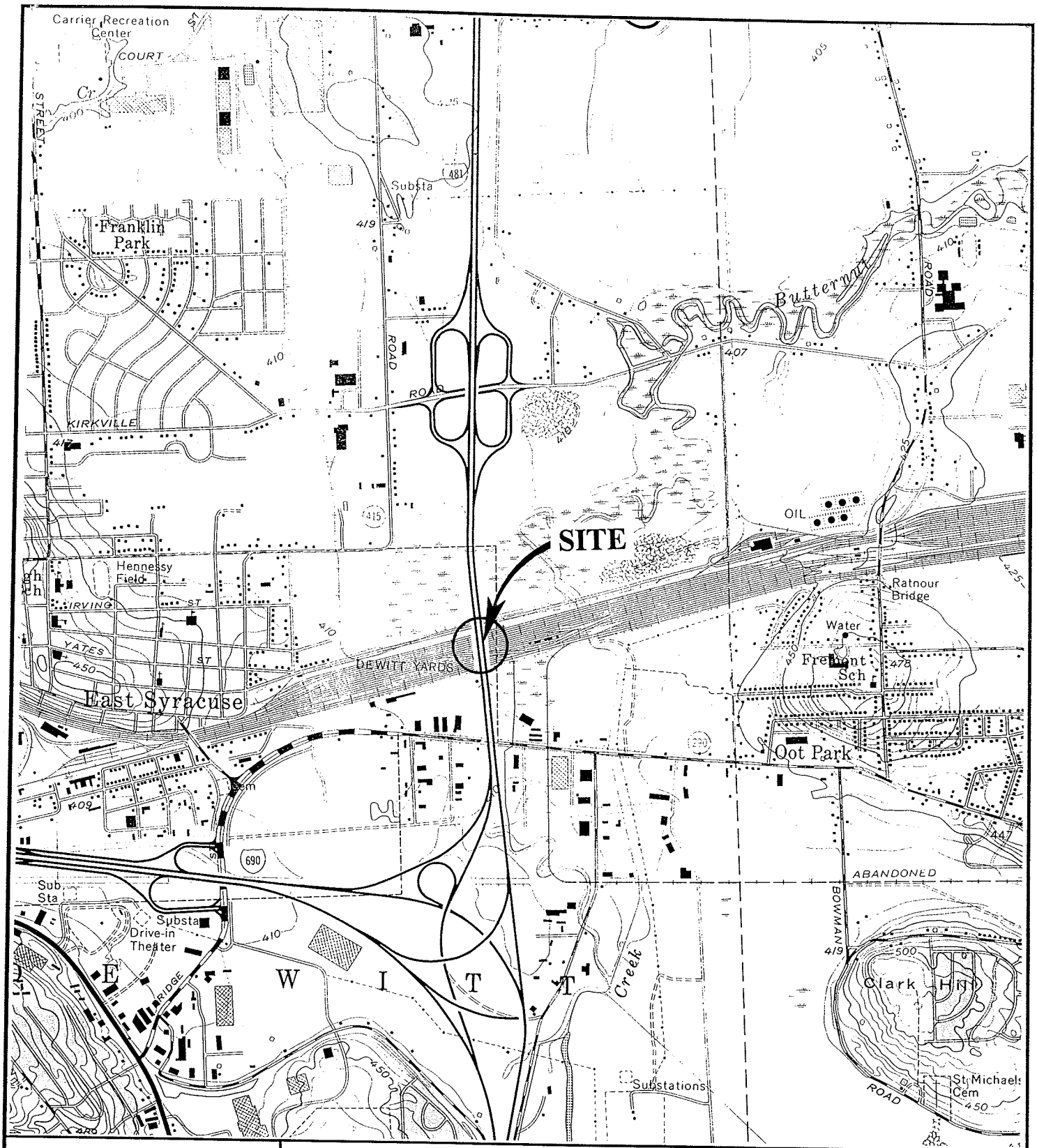

FIGURE 1
Site Location Map

I-481 NORTH BOUND OVER CONRAIL

BIN 1-09357-2

SCALE: 1" = 2000'

LABELLA

PROJECT NO. 97132

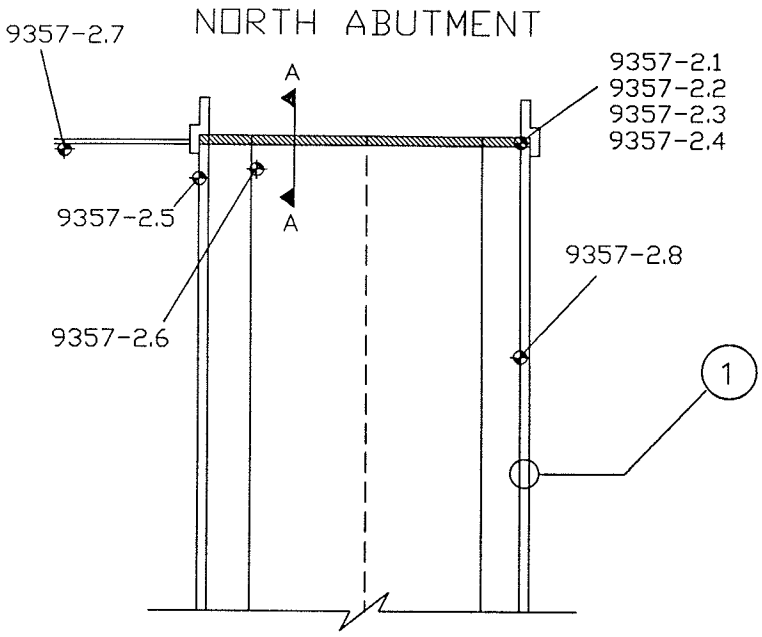

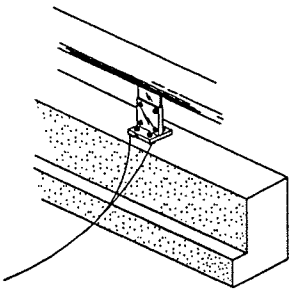

1 TYPICAL RAILING/ PARAPET DETAIL

SPOTTY APPLICATION OF ASBESTOS-CONTAINING CAULKING COMPOUND AROUND SOME GUIDE RAIL BASE PLATES

I-481 NORTH BOUND
BIN 1-09357-2

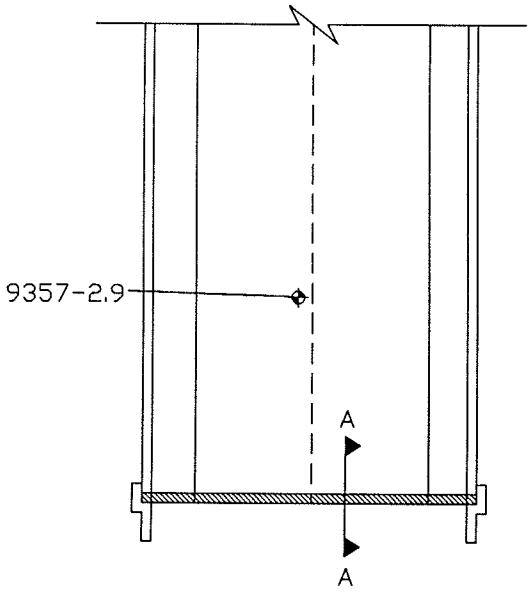

SOUTH ABUTMENT

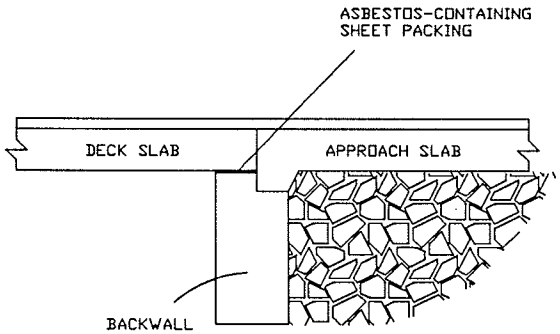

SECTION A-A

LEGEND

- 9357-2.1 SAMPLE LOCATION
- ASBESTOS-CONTAINING SHEET PACKING

NORTH

PROJECT TITLE: ASBESTOS SAMPLING SURVEY 16 BRIDGES, ONONDAGA COUNTY, NEW YORK	PROJECT NO. 97132
	PIN 3804.00.101
FIGURE 2: I-481 NORTH BOUND OVER CONRAIL BIN 1-09357-2 SAMPLE LOCATIONS AND CONFIRMED ACM	NOT TO SCALE
	DATE: MAY, 1998

Bulk Sample Results Table

Asbestos Sampling Survey
BIN 1-09357-2
Interstate Route 481 North Bound over Conrail
Onondaga County, New York
LaBella Project # 97132
PIN 3804.00.101

Sample #	Sample Location	Type of Material	Results % Asbestos	Amount of Material	Specification Item No.
9357-2.1	**North End of Bridge Between Deck & Abutment**	**Sheet Packing**	**32 % Chrysotile**	**7 Square Meters**	**15202.0627 (M)**
9357-2.2	North End of Bridge Between Deck & Wing Wall	Joint Filler	None Detected	N/A	N/A
9357-2.3	North End of Bridge Beneath Bearing	Bearing Pad	None Detected	N/A	N/A
9357-2.4	North End of Bridge on Abutment	Masonry Coating	None Detected	N/A	N/A
9357-2.5	North End of Bridge, on West I-Beam	Green Paint	None Detected	N/A	N/A
9357-2.6	North End of Bridge, on Inside I-Beam	Green Paint	None Detected	N/A	N/A
9357-2.7	North End of Bridge at Joint & Retaining Wall	Caulking Compound	None Detected	N/A	N/A
9357-2.8	**North End of Bridge at Base of Guide Rail**	**Gray Caulking Compound**	**4 % Chrysotile**	**45.7 Linear Meters**	**15202.0629 (M)**
9357-2.9	North End of Bridge on Ground Below 2nd Span	Green Paint	None Detected	N/A	N/A

LATEST BIENNIAL INSPECTION REPORT

Inspection Date: 7/9/2013 RC: 33 BIN: 1093572

Bridge Ratings

Carried: 481I 481I33012069 Crossed: CSX TRANS/AMTRAK CheckValue: 1,866,324,811

Inspection Agency: 13 - Consultant Type of Inspection: 1 - BIENNIAL
GTMS: 302 -- Steel - Stringer/Multi-Beam or Girder
POSTINGS: See Gen Rec Page 1 for Postings at time of inspection.
Further Investigation Needed: No
State Highway Number: 70-7 Milepoint: 7.41 AADT/Yr: 22400 / 2008
Orientation: 8 - Northwest Political Unit: 0233 - Town of DEWITT Year Built: 1972
Total Spans: 15 Ramp Bridge Attached To Span: NA BIN: NA
General Recommendation: 5 Computed Condition Rating: 4.444

Abutment Ratings:	Beg Abut	End Abut
Joint with Deck	5	8
Bearings, Bolts, Pads	5	5
Seats and Pedestals	5	5
Backwall	5	5
Stem (Breastwall)	8	8
Erosion or Scour	5	5
Footings	9	9
Piles	9	9
Recommendation	5	5

Wingwall Ratings:	Beg Abut	End Abut
Walls	5	4
Footings	9	9
Erosion or Scour	6	6
Piles	9	9

Channel Ratings:	Channel
Stream Alignment	8
Erosion and Scour	8
Waterway Opening	8
Bank Protection	8

Approach Ratings:	Approaches
Drainage	4
Embankment	6
Settlement	5
Erosion	6
Pavement	5
Guide Railing	5

Number of Flags Issued:

RED: 0 Yellow: 0 Safety: 0

Vulnerability Reviews Recommended: 1=Yes, 2=No, 3=NA, X=NotActive

Hydraulic: 3	Overload: X	Steel: 2
Collision: 2	Concrete: X	Seismic: X

Inspector's Signature: CheckValue: 1,866,324,811 Date: 7/9/2013

James W. Gorzynski,PE () (Inspector ID:3100044)

Signed copy of this inspection report is available in the appropriate NYSDOT Regional Office

Reviewed By: Date: 9/4/2013

Stephen L. Gauthier,PE () (QC ID:3100077)

Signed copy of this inspection report is available in the appropriate NYSDOT Regional Office

Inspection Date: 7/9/2013 RC: 33 BIN: 1093572

Span Ratings

Carried: 481I 481I33012069 Crossed: CSX TRANS/AMTRAK CheckValue: 1,866,324,811

Deck Element Ratings:	001	002	003	004	005	006	007	008	009	010
Wearing Surface	4	4	4	4	4	4	4	4	4	4
Curbs	8	8	8	8	8	8	8	8	8	8
Sidewalks, Fascias	5	5	4	4	4	5	5	5	5	5
Railings, Parapets	4	4	4	4	4	4	4	4	4	4
Scuppers	8	4	4	4	4	4	4	4	4	4
Gratings	8	8	8	8	8	8	8	8	8	8
Median	8	8	8	8	8	8	8	8	8	8
Mono Deck Surface	4	4	4	4	4	4	4	4	4	4

Superstructure Ratings:	001	002	003	004	005	006	007	008	009	010
Structural Deck	5	5	5	5	5	5	5	5	5	5
Primary Members	5	5	5	5	5	5	5	5	5	5
Secondary Members	5	5	5	5	5	5	5	5	5	5
Paint	4	4	4	4	4	4	4	4	4	4
Joints	4	4	4	4	4	5	5	5	4	5
Recommendation	5	5	5	5	5	5	5	5	5	5

Pier Ratings:	001	002	003	004	005	006	007	008	009	010
Bearings, Bolts, Pads	4	4	4	4	4	4	4	4	4	4
Pedestals	5	4	5	4	4	5	5	5	5	5
Top of Cap or Beam	5	5	5	5	5	5	5	5	5	5
Stem Solid Pier	8	4	4	4	8	8	8	8	8	8
Cap Beam	5	4	5	5	4	5	5	5	5	5
Pier Columns	5	4	5	4	4	5	4	5	5	5
Footings	9	9	9	9	9	6	9	9	9	9
Erosion or Scour	6	6	6	6	6	6	6	6	6	6
Piles	9	9	9	9	9	9	9	9	9	9
Recommendation	5	5	5	5	5	5	5	5	5	5

Utility Ratings:	001	002	003	004	005	006	007	008	009	010
Lighting	8	8	8	8	8	8	8	8	8	8
Sign Structure	8	8	8	8	8	8	8	8	8	8
Utilities and Support	8	8	8	8	8	8	8	8	8	8

Field Notes:

Field Date	Arrival	Departure	Temp (C)	Temp (F)	Weather Conditions
6/3/2013	7:30:00 AM	3:30:00 PM	16	60	Fair
6/5/2013	7:40:00 AM	11:20:00 AM	16	60	Fair, Cloudy
7/9/2013	4:50:00 PM	5:15:00 PM	29	85	Fair

Inspection Date: 7/9/2013 RC: 33 BIN: 1093572

Span Ratings

Carried: 481I 481I33012069 Crossed: CSX TRANS/AMTRAK CheckValue: 1,866,324,811

Deck Element Ratings:	011	012	013	014	015
Wearing Surface	4	4	4	4	4
Curbs	8	8	8	8	8
Sidewalks, Fascias	5	5	5	5	5
Railings, Parapets	4	4	4	4	4
Scuppers	4	4	4	4	4
Gratings	8	8	8	8	8
Median	8	8	8	8	8
Mono Deck Surface	4	4	4	4	4

Superstructure Ratings:	011	012	013	014	015
Structural Deck	5	5	5	5	5
Primary Members	5	5	5	5	5
Secondary Members	5	5	5	5	5
Paint	4	4	4	4	4
Joints	5	4	4	4	8
Recommendation	5	5	5	5	5

Pier Ratings:	011	012	013	014	015
Bearings, Bolts, Pads	4	4	4	4	8
Pedestals	4	5	5	4	8
Top of Cap or Beam	5	5	5	5	8
Stem Solid Pier	8	8	8	8	8
Cap Beam	5	5	4	5	8
Pier Columns	4	5	5	5	8
Footings	9	9	9	9	8
Erosion or Scour	6	6	6	6	8
Piles	9	9	9	9	8
Recommendation	5	5	5	5	8

Utility Ratings:	011	012	013	014	015
Lighting	8	8	8	8	8
Sign Structure	8	8	8	8	8
Utilities and Support	8	8	8	8	8

Inspection Date: 7/9/2013 RC: 33 BIN: 1093572

Inspection Notes

Carried: 481I 481I33012069 Crossed: CSX TRANS/AMTRAK CheckValue: 1,866,324,811

Note ID: 3A1310935720002

Approaches: Drainage -- Rated 4, Was 5
Referenced Photos: "2"
2013 - The catch basin at the end right is partially covered with roadway debris that will restrict drainage during periods of high runoff. Approach drainage would otherwise rate '6' alone.

Note ID: 3A1310935720003

Approaches: Pavement -- Rated 5, Was 5
Referenced Photos: "1"
2013 - Minor cracking has occurred on the begin approach pavement.
Remaining areas of approach pavement on the begin and end approaches are in better condition and would rate '5' or '6' alone.

Note ID: 3A1310935720004

Span 001 -- Deck Elements: Wearing Surface -- Rated 4, Was 4
Span 001 -- Deck Elements: Mono Deck Surface -- Rated 4, Was 4
Span 002 -- Deck Elements: Wearing Surface -- Rated 4, Was 4
Span 002 -- Deck Elements: Mono Deck Surface -- Rated 4, Was 4
Span 003 -- Deck Elements: Wearing Surface -- Rated 4, Was 4
Span 003 -- Deck Elements: Mono Deck Surface -- Rated 4, Was 4
Span 004 -- Deck Elements: Wearing Surface -- Rated 4, Was 4
Span 004 -- Deck Elements: Mono Deck Surface -- Rated 4, Was 4
Span 005 -- Deck Elements: Wearing Surface -- Rated 4, Was 4
Span 005 -- Deck Elements: Mono Deck Surface -- Rated 4, Was 4
Span 006 -- Deck Elements: Wearing Surface -- Rated 4, Was 4
Span 006 -- Deck Elements: Mono Deck Surface -- Rated 4, Was 4
Span 007 -- Deck Elements: Wearing Surface -- Rated 4, Was 4
Span 007 -- Deck Elements: Mono Deck Surface -- Rated 4, Was 4
Span 008 -- Deck Elements: Wearing Surface -- Rated 4, Was 4
Span 008 -- Deck Elements: Mono Deck Surface -- Rated 4, Was 4
Span 009 -- Deck Elements: Wearing Surface -- Rated 4, Was 4
Span 009 -- Deck Elements: Mono Deck Surface -- Rated 4, Was 4
Span 010 -- Deck Elements: Wearing Surface -- Rated 4, Was 4
Span 010 -- Deck Elements: Mono Deck Surface -- Rated 4, Was 4
Span 011 -- Deck Elements: Wearing Surface -- Rated 4, Was 4
Span 011 -- Deck Elements: Mono Deck Surface -- Rated 4, Was 4
Span 012 -- Deck Elements: Wearing Surface -- Rated 4, Was 4
Span 012 -- Deck Elements: Mono Deck Surface -- Rated 4, Was 4
Span 013 -- Deck Elements: Wearing Surface -- Rated 4, Was 4
Span 013 -- Deck Elements: Mono Deck Surface -- Rated 4, Was 4
Span 014 -- Deck Elements: Wearing Surface -- Rated 4, Was 4
Span 014 -- Deck Elements: Mono Deck Surface -- Rated 4, Was 4
Span 015 -- Deck Elements: Wearing Surface -- Rated 4, Was 4
Span 015 -- Deck Elements: Mono Deck Surface -- Rated 4, Was 4
Referenced Photos: "3", "6", "54", "55"
2013 - The wearing surface has been polished to smooth aggregate in all spans from high traffic volume, mainly along the wheel paths. There are also several

Inspection Notes

Carried: 481I 481I33012069 Crossed: CSX TRANS/AMTRAK CheckValue: 1,866,324,811

Note ID: 3A1310935720004 - continued

patches throughout that create a rough ride at the highway speeds at this bridge (Photos 3 & 54). The wearing surface and mono deck surface are beginning to spall around these areas throughout (Photo 55).

All spans typically have several tight to 1/32" open longitudinal and transverse cracks that will eventually allow water to penetrate the concrete deck (Photo 6).

Note ID: 3A1310935720006

Span 001 -- Deck Elements: Railings, Parapets -- Rated 4, Was 4
Span 002 -- Deck Elements: Railings, Parapets -- Rated 4, Was 4
Span 003 -- Deck Elements: Railings, Parapets -- Rated 4, Was 4
Span 004 -- Deck Elements: Railings, Parapets -- Rated 4, Was 4
Span 005 -- Deck Elements: Railings, Parapets -- Rated 4, Was 4
Span 006 -- Deck Elements: Railings, Parapets -- Rated 4, Was 4
Span 007 -- Deck Elements: Railings, Parapets -- Rated 4, Was 4
Span 008 -- Deck Elements: Railings, Parapets -- Rated 4, Was 4
Span 009 -- Deck Elements: Railings, Parapets -- Rated 4, Was 4
Span 010 -- Deck Elements: Railings, Parapets -- Rated 4, Was 4
Span 011 -- Deck Elements: Railings, Parapets -- Rated 4, Was 4
Span 012 -- Deck Elements: Railings, Parapets -- Rated 4, Was 4
Span 013 -- Deck Elements: Railings, Parapets -- Rated 4, Was 4
Span 014 -- Deck Elements: Railings, Parapets -- Rated 4, Was 4
Span 015 -- Deck Elements: Railings, Parapets -- Rated 4, Was 4

Referenced Photos: "4", "7", "8", "58", "45"
2013 - Upper approximate 1.5' bands along the right and left concrete parapets (above the sloped granite portion) have several areas of rust staining, cracking and spalling with exposed corroded reinforcement on the top surface and inside and outside faces in all spans (Photos 4, 7, 8, 45 & 58). Cracks typically have occurred approximately 6" below the top and in the areas surrounding previous concrete patches. There are several up to 1/8" open longitudinal cracks throughout, but the parapets are sufficiently solid for vehicular impact (Photo 7).

Note ID: 3A1310935720008

Span 001 -- Superstructure: Structural Deck -- Rated 5, Was 4

Referenced Photos: "5"
2013 - The underside of the structural deck at the begin of Span 1 has rusted stay-in-place forms indicating that water is leaking through the bridge deck in this isolated area. A section of corrugated stay-in-place forms has also fallen in this area exposing the underside of the concrete deck with light cracking and efflorescence. However, this condition alone is not sufficiently detrimental to warrant a rating lower than '5' for this item. Remaining areas of the structural deck in Span 1 are in better condition.

Inspection Date: 7/9/2013 RC: 33 BIN: 1093572

Inspection Notes

Carried: 481I 481I33012069 Crossed: CSX TRANS/AMTRAK CheckValue: 1,866,324,811

Note ID: 3A1310935720009

Span 001 -- Superstructure: Paint -- Rated 4, Was 4
Span 002 -- Superstructure: Paint -- Rated 4, Was 4
Span 003 -- Superstructure: Paint -- Rated 4, Was 4
Span 004 -- Superstructure: Paint -- Rated 4, Was 4
Span 005 -- Superstructure: Paint -- Rated 4, Was 4
Span 006 -- Superstructure: Paint -- Rated 4, Was 4
Span 007 -- Superstructure: Paint -- Rated 4, Was 4
Span 008 -- Superstructure: Paint -- Rated 4, Was 4
Span 009 -- Superstructure: Paint -- Rated 4, Was 4
Span 010 -- Superstructure: Paint -- Rated 4, Was 4
Span 011 -- Superstructure: Paint -- Rated 4, Was 4
Span 012 -- Superstructure: Paint -- Rated 4, Was 4
Span 013 -- Superstructure: Paint -- Rated 4, Was 4
Span 014 -- Superstructure: Paint -- Rated 4, Was 4
Span 015 -- Superstructure: Paint -- Rated 4, Was 4

Referenced Photos: "9", "10", "16", "48", "62", "17", "31", "43", "47"
2013 - The bottom flanges of exterior portions of both fascia girders have significant paint loss with rust, flake rust and corrosion (Photos 16 & 62). Section loss is minimal. Fascia girder webs have spotty areas of paint failure and rust (Photo 47). Interior girders have peeling paint and paint deterioration, mainly along bottom flanges and especially in areas beneath superstructure joints (Photo 48). Extensive rust and corrosion have developed on pier bearings, bearing stiffeners, connection plates and cross-bracing over piers (Photos 9, 10, 17, 31 & 43).

Note ID: 3A1310935720000A

Span 001 -- Superstructure: Joints -- Rated 4, Was 4
Span 002 -- Superstructure: Joints -- Rated 4, Was 4
Span 003 -- Superstructure: Joints -- Rated 4, Was 4
Span 004 -- Superstructure: Joints -- Rated 4, Was 4
Span 005 -- Superstructure: Joints -- Rated 4, Was 4
Span 006 -- Superstructure: Joints -- Rated 5, Was 5
Span 009 -- Superstructure: Joints -- Rated 4, Was 4
Span 012 -- Superstructure: Joints -- Rated 4, Was 4
Span 013 -- Superstructure: Joints -- Rated 4, Was 4
Span 014 -- Superstructure: Joints -- Rated 4, Was 4

Referenced Photos: "32", "9", "22", "38", "39", "51", "52"
2013 - Open troughs at superstructure joints at Piers 1 - 5 & 9 are almost completely plugged with roadway debris that severely restricts proper drainage (Photos 22 & 32). Trough support framing at these piers is intact, but with minor rust and corrosion (Photo 9).

Steel framing along finger joints at Piers 1 - 5 & 9 has minor to moderate to severe corrosion with flake rust and delamination (Photo 32).

The tops of superstructure joints with rubber seals are partially filled with sand and roadway debris (Photo 38). The undersides of these superstructure joints have deteriorated and spalled concrete almost full length of the joints (Photos 39, 51 & 52).

Inspection Notes

Carried: 481I 481I33012069 Crossed: CSX TRANS/AMTRAK CheckValue: 1,866,324,811

Note ID: 3A131093572000A - continued

Note ID: 3A131093572000B

Span 001 -- Pier: Bearings, Bolts, Pads -- Rated 4, Was 4
Span 002 -- Pier: Bearings, Bolts, Pads -- Rated 4, Was 4
Span 003 -- Pier: Bearings, Bolts, Pads -- Rated 4, Was 4
Span 004 -- Pier: Bearings, Bolts, Pads -- Rated 4, Was 4
Span 005 -- Pier: Bearings, Bolts, Pads -- Rated 4, Was 4
Span 006 -- Pier: Bearings, Bolts, Pads -- Rated 4, Was 4
Span 007 -- Pier: Bearings, Bolts, Pads -- Rated 4, Was 4
Span 008 -- Pier: Bearings, Bolts, Pads -- Rated 4, Was 4
Span 009 -- Pier: Bearings, Bolts, Pads -- Rated 4, Was 4
Span 010 -- Pier: Bearings, Bolts, Pads -- Rated 4, Was 4
Span 011 -- Pier: Bearings, Bolts, Pads -- Rated 4, Was 4
Span 012 -- Pier: Bearings, Bolts, Pads -- Rated 4, Was 4
Span 013 -- Pier: Bearings, Bolts, Pads -- Rated 4, Was 4
Span 014 -- Pier: Bearings, Bolts, Pads -- Rated 4, Was 4

Referenced Photos: "40", "41", "44", "11", "23", "53"
2013 - All high rocker bearings were under/over-extended for the ambient air temperature on the day of inspection. The bearings that were under-extended and in similar condition are at Piers 1, 2, 3, 4, 6, 7, 8, 10 & 11 (Photos 23, 40 & 44). Most bearings were under-extended between approximately 3 degrees and 5 degrees. Bearing 4 at Pier 8 had the worst under-extension at approximately 8 degrees (Photo 44).

Fixed Bearing 2 on Pier 7 is not stitch welded. It is welded on both sides with the begin and end unwelded.

Minor to moderate pack rust has developed beneath the rockers of all high rocker bearings on all piers (Photos 11, 40, 41, 44 & 53). Remaining areas of both fixed and expansion pier bearings have minor to moderate peeling paint with rust and minor corrosion (Photos 23, 40, 44 & 53).

Note ID: 3A1310935720007

Span 002 -- Deck Elements: Scuppers -- Rated 4, Was 4
Span 003 -- Deck Elements: Scuppers -- Rated 4, Was 4
Span 004 -- Deck Elements: Scuppers -- Rated 4, Was 4
Span 005 -- Deck Elements: Scuppers -- Rated 4, Was 4
Span 006 -- Deck Elements: Scuppers -- Rated 4, Was 4
Span 007 -- Deck Elements: Scuppers -- Rated 4, Was 4
Span 008 -- Deck Elements: Scuppers -- Rated 4, Was 4
Span 009 -- Deck Elements: Scuppers -- Rated 4, Was 4
Span 010 -- Deck Elements: Scuppers -- Rated 4, Was 4
Span 011 -- Deck Elements: Scuppers -- Rated 4, Was 4
Span 012 -- Deck Elements: Scuppers -- Rated 4, Was 4
Span 013 -- Deck Elements: Scuppers -- Rated 4, Was 4
Span 014 -- Deck Elements: Scuppers -- Rated 4, Was 4
Span 015 -- Deck Elements: Scuppers -- Rated 4, Was 4

Note ID: 3A1310935720007 - continued

Referenced Photos: "21", "29", "30", "46"
2013 - Scuppers in Spans 2 through 15 are typically partially or completely plugged with sand and roadway debris (Photo 21). In addition, downspout hoppers are typically plugged up to 3/4 full with sand and roadway debris (Photo 29).

Piers with original steel downspouts and those with new PVC downspouts are summarized on the attached Scupper Downspout Documentation. Original ductile iron downspouts have peeling paint, rust and corrosion. The original downspout at Pier 5 has also separated at a joint (Photo 30). New PVC downspouts would rate '7' alone (Photo 46).

Note ID: 3A131093572000C

Span 002 -- Pier: Pedestals -- Rated 4, Was 4
Span 004 -- Pier: Pedestals -- Rated 4, Was 4
Span 005 -- Pier: Pedestals -- Rated 4, Was 4
Span 011 -- Pier: Pedestals -- Rated 4, Was 4
Span 013 -- Pier: Pedestals -- Rated 5, Was 5
Span 014 -- Pier: Pedestals -- Rated 4, Was 4

Referenced Photos: "12", "24", "33", "34", "49", "56"
2013 - Pedestals are cracked with rust staining at Piers 2, 4, 5, 11, 13 & 14 (Photos 12 & 49). Fascia pedestals are cracked and hollow sounding with rust staining at Piers 2, 11, 13 & 14 (Photos 12, 49 & 56).

Severe spalling with exposed corroded reinforcement has occurred on Pedestal 2 at Pier 4 (Photo 24) and Pedestals 3 & 4 at Pier 5 (Photos 33 & 34). Bearing contact area has not been affected at these pedestals.

Remaining pedestals at all piers would rate '5' or '6' alone.

Note ID: 3A131093572000D

Span 002 -- Pier: Stem Solid Pier -- Rated 4, Was 5
Span 003 -- Pier: Stem Solid Pier -- Rated 4, Was 4
Span 004 -- Pier: Stem Solid Pier -- Rated 4, Was 4

Referenced Photos: "13", "25", "18", "26"
2013 - Solid pier stem crash walls at Piers 2, 3 & 4 were rehabilitated in the past, but currently have open cracking and large scale map cracking (shrinkage cracking) with isolated areas of efflorescence and minor rust staining (Photos 13, 18, 25 & 26).

The solid pier stem crash wall at Pier 3 has severe deterioration with efflorescence, rust staining and exposed corroded reinforcement at the right end of the begin face (Photo 18). The spalling is up to 1" deep on an area approximately 2.5' wide and 1.5' high.

The right portion at the top of the end face of the solid stem of Pier 4 is severely

Note ID: 3A131093572000D - continued

deteriorated and spalled with exposed corroded reinforcement along almost the entire length between the columns (Photo 26). The spalled area is approximately 1' high by 1' deep completely exposing the reinforcement cage. It appears that this was the same area that was repaired during the last contract because it is spalled along the sawcut line.

Note ID: 3A131093572000E

Span 002 -- Pier: Cap Beam -- Rated 4, Was 5
Span 004 -- Pier: Cap Beam -- Rated 5, Was 5
Span 005 -- Pier: Cap Beam -- Rated 4, Was 4
Span 013 -- Pier: Cap Beam -- Rated 4, Was 4

Referenced Photos: "14", "27", "35", "57"
2013 - Cap beams at Piers 2, 4, 5 & 13 have areas of dampness, cracking, efflorescence, rust staining and severe deterioration and spalling with exposed corroded reinforcement. Most cracking with efflorescence has occurred on the undersides of these cap beams (Photos 14, 27 & 35). The worst area has occurred on the underside and lower portion of the begin face of the Pier 5 cap beam (Photo 35). This spalled area is up to 3" deep and has occurred in the right portion for approximately half the length of the cap beam between the pier columns (Photo 35). It appears that this was a previously patched area.

A delaminated and hollow sounding area approximately 1.5' in diameter has occurred at the right end of the end face of Pier 13 beneath Pedestal 4 (Photo 57).

The condition of the Pier 4 cap beam is not sufficiently detrimental to warrant a rating lower than '5'.

Remaining areas of cap beams at Piers 2, 5 & 13 are in better condition and would rate '5' alone.

Note ID: 3A131093572000F

Span 002 -- Pier: Pier Columns -- Rated 4, Was 4
Span 004 -- Pier: Pier Columns -- Rated 4, Was 5
Span 005 -- Pier: Pier Columns -- Rated 4, Was 4
Span 007 -- Pier: Pier Columns -- Rated 4, Was 4
Span 011 -- Pier: Pier Columns -- Rated 4, Was 4

Referenced Photos: "15", "28", "36", "37", "42", "50"
2013 - The begin face at the base of Column 2 of Pier 2 is map cracked and has hollow sounding concrete in the area adjacent to a previously patched area (Photo 15).

The right face of Column 3 of Pier 4 is map cracked and rust stained and has hollow sounding concrete in the area adjacent to a previously patched area (Photo 28).

Column 1 of Pier 5 has severe deterioration and spalling with exposed corroded

Note ID: 3A1310935720000F - continued

reinforcement in the lower portion of the column (Photo 36). This column is spalled around the begin face approximately 1' wide at a height of approximately 4' and the spalling extends to ground level on the left side (Photo 36). Both stirrups and vertical reinforcement are exposed. Cracking with efflorescence has also occurred at the begin right of this column adjacent to the downspout (Photo 37).

The right portion of the begin face of Column 1 of Pier 7 has cracking and hollow sounding concrete near the top (Photo 42).

The end face of Column 3 of Pier 11 is hollow sounding on approximately 15% of the face (Photo 50).

Remaining areas of pier columns at Piers 2, 4, 5, 7 & 11 are in better condition and would rate '5' alone.

Note ID: 3A1310935720005

Span 003 -- Deck Elements: Sidewalks, Fascias -- Rated 4, Was 4
Span 004 -- Deck Elements: Sidewalks, Fascias -- Rated 4, Was 4
Span 005 -- Deck Elements: Sidewalks, Fascias -- Rated 4, Was 4
Referenced Photos: "19", "20"
2013 - The left concrete fascia at superstructure joints at Piers 2, 3 & 4 have severe deterioration and spalling with exposed corroded reinforcement (Photo 19). The spalls extend to the underside of the fascia concrete at the begin left of Spans 3 & 4 and the begin left and begin right of Span 5 (Photo 20).

Remaining areas of the right and left fascias in Spans 3, 4 & 5 would rate '5' alone.

Note ID: 3A1310935720000

End Abut -- Abutment: Backwall -- Rated 5, Was 5
Referenced Photos: "59"
2013 - A full height vertical crack with efflorescence has developed in Bay 2 of the end abutment backwall. Remaining areas of the end abutment backwall would rate '6' alone.

Note ID: 3A1310935720001

End Abut -- Wingwalls: Walls -- Rated 4, Was 4
Referenced Photos: "60", "61"
2013 - The end right cheek wall has map cracking, cracking with efflorescence and minor rust staining on the right face (Photo 60). In addition, there is an approximate 1.5' diameter spalled area at the top of the begin face (Photo 61). The concrete is otherwise solid. The end left cheek wall would rate '5' alone.

Inspection Date: 7/9/2013 RC: 33 BIN: 1093572

Inspection Photos in Photo Number Order

Carried: 481I 481I33012069 Crossed: CSX TRANS/AMTRAK CheckValue: 1,866,324,811

Begin Approach



Photo Number: 1 Photo Filename: 13DSCN6300.jpg

End Right Approach



Photo Number: 2 Photo Filename: 13DSCN6447.jpg

Inspection Date: 7/9/2013 RC: 33 BIN: 1093572

Inspection Photos in Photo Number Order

Carried: 481I 481I33012069 Crossed: CSX TRANS/AMTRAK CheckValue: 1,866,324,811

Top of Span 1 - Similar All Spans



Photo Number: 3 Photo Filename: 13DSCN6302.jpg

Span 1 Right Parapet - Typical All Spans



Photo Number: 4 Photo Filename: 13DSCN6303.jpg

Inspection Date: 7/9/2013 RC: 33 BIN: 1093572

Inspection Photos in Photo Number Order

Carried: 481I 481I33012069 Crossed: CSX TRANS/AMTRAK CheckValue: 1,866,324,811

Span 1 Bay 2 at Begin



Photo Number: 5 Photo Filename: 13DSCN6309.jpg

Span 2 Left Lane



Photo Number: 6 Photo Filename: 13DSCN6305.jpg

Inspection Date: 7/9/2013 RC: 33 BIN: 1093572

Inspection Photos in Photo Number Order

Carried: 481I 481I33012069 Crossed: CSX TRANS/AMTRAK CheckValue: 1,866,324,811

Span 2 Top of Left Parapet - Typical All Spans



Photo Number: 7 Photo Filename: 13DSCN6304.jpg

Span 2 Left Parapet - Typical All Spans



Photo Number: 8 Photo Filename: 13DSCN6308.jpg

Inspection Date: 7/9/2013 RC: 33 BIN: 1093572

Inspection Photos in Photo Number Order

Carried: 481I 481I33012069 Crossed: CSX TRANS/AMTRAK CheckValue: 1,866,324,811

Span 2 Bay 2 - Typical
All Spans At Piers



Photo Number: 9 Photo Filename: 13DSCN6310.jpg

Span 2 Bay 2 - Typical
All Spans At Piers



Photo Number: 10 Photo Filename: 13DSCN6311.jpg

Inspection Date: 7/9/2013 RC: 33 BIN: 1093572

Inspection Photos in Photo Number Order

Carried: 481I 481I33012069 Crossed: CSX TRANS/AMTRAK CheckValue: 1,866,324,811

Pier 2 Bearing #3 - Typical All Pier 2 Bearings



Photo Number: 11 Photo Filename: 13DSCN6319.jpg

Pier 2 Pedestal 1 - Typical Pedestals 3 & 4



Photo Number: 12 Photo Filename: 13DSCN6317.jpg

Inspection Date: 7/9/2013 RC: 33 BIN: 1093572

Inspection Photos in Photo Number Order

Carried: 481I 481I33012069 Crossed: CSX TRANS/AMTRAK CheckValue: 1,866,324,811

Pier 2 Top of Stem



Photo Number: 13 Photo Filename: 13DSCN6312.jpg

Pier 2 Underside of Cap Beam Between Columns 2 & 3



Photo Number: 14 Photo Filename: 13DSCN6316.jpg

Inspection Date: 7/9/2013 RC: 33 BIN: 1093572

Inspection Photos in Photo Number Order

Carried: 481I 481I33012069 Crossed: CSX TRANS/AMTRAK CheckValue: 1,866,324,811

Pier 2 Column 2 Begin Face



Photo Number: 15 Photo Filename: 13DSCN6313.jpg

Span 3 Left Fascia Girder Bottom Flange - Typical All Spans



Photo Number: 16 Photo Filename: 13DSCN6325.jpg

Inspection Date: 7/9/2013 RC: 33 BIN: 1093572

Inspection Photos in Photo Number Order

Carried: 481I 481I33012069 Crossed: CSX TRANS/AMTRAK CheckValue: 1,866,324,811

Span 3 Left Fascia Girder at Pier 3



Photo Number: 17 Photo Filename: 13DSCN6327.jpg

Pier 3 Begin Right Face of Stem



Photo Number: 18 Photo Filename: 13DSCN6322.jpg

Inspection Date: 7/9/2013 RC: 33 BIN: 1093572

Inspection Photos in Photo Number Order

Carried: 481I 481I33012069 Crossed: CSX TRANS/AMTRAK CheckValue: 1,866,324,811

Span 3 Left Fascia at Pier 3 Joint - Typical Spans 4 & 5



Photo Number: 19 Photo Filename: 13DSCN6323.jpg

Span 5 Under RIght Fascia Near Pier 5



Photo Number: 20 Photo Filename: 13DSCN6329.jpg

Inspection Date: 7/9/2013 RC: 33 BIN: 1093572

Inspection Photos in Photo Number Order

Carried: 481I 481I33012069 Crossed: CSX TRANS/AMTRAK CheckValue: 1,866,324,811

Span 4 Right Scupper - Typical Spans 2 - 15



Photo Number: 21 Photo Filename: 13DSCN6306.jpg

Pier 3 Joint Trough



Photo Number: 22 Photo Filename: 13DSCN6324.jpg

Inspection Date: 7/9/2013 RC: 33 BIN: 1093572

Inspection Photos in Photo Number Order

Carried: 481I 481I33012069 Crossed: CSX TRANS/AMTRAK CheckValue: 1,866,324,811

Pier 4 Bearing #2



Photo Number: 23 Photo Filename: 13DSCN6330.jpg

Pier 4 Pedestal 2 Begin Face



Photo Number: 24 Photo Filename: 13DSCN6334.jpg

Inspection Date: 7/9/2013 RC: 33 BIN: 1093572

Inspection Photos in Photo Number Order

Carried: 481I 481I33012069 Crossed: CSX TRANS/AMTRAK CheckValue: 1,866,324,811

Pier 4 Begin Face of Stem - Typical Spans 2 - 4



Photo Number: 25 Photo Filename: 13DSCN6340.jpg

Pier 4 Stem - End Right Face



Photo Number: 26 Photo Filename: 13DSCN6338.jpg

Inspection Date: 7/9/2013 RC: 33 BIN: 1093572

Inspection Photos in Photo Number Order

Carried: 481I 481I33012069 Crossed: CSX TRANS/AMTRAK CheckValue: 1,866,324,811

Pier 4 Underside of Cap Beam Between Columns 2 & 3



Photo Number: 27 Photo Filename: 13DSCN6339.jpg

Pier 4 Column 3 Right Face



Photo Number: 28 Photo Filename: 13DSCN6335.jpg

Inspection Date: 7/9/2013 RC: 33 BIN: 1093572

Inspection Photos in Photo Number Order

Carried: 481I 481I33012069 Crossed: CSX TRANS/AMTRAK CheckValue: 1,866,324,811

Pier 5 Hopper



Photo Number: 29 Photo Filename: 13DSCN6348.jpg

Pier 5 Downspout



Photo Number: 30 Photo Filename: 13DSCN6344.jpg

Inspection Date: 7/9/2013 RC: 33 BIN: 1093572

Inspection Photos in Photo Number Order

Carried: 481I 481I33012069 Crossed: CSX TRANS/AMTRAK CheckValue: 1,866,324,811

Pier 5 Bay 2 Cross Bracing



Photo Number: 31 Photo Filename: 13DSCN6351.jpg

Pier 5 Joint Trough - Typical Spans 1-5 & 9



Photo Number: 32 Photo Filename: 13DSCN6347.jpg

Inspection Date: 7/9/2013 RC: 33 BIN: 1093572

Inspection Photos in Photo Number Order

Carried: 481I 481I33012069 Crossed: CSX TRANS/AMTRAK CheckValue: 1,866,324,811

Pier 5 Pedestal 3 Right Face



Photo Number: 33 Photo Filename: 13DSCN6350.jpg

Pier 5 Pedestal 4 Right Face

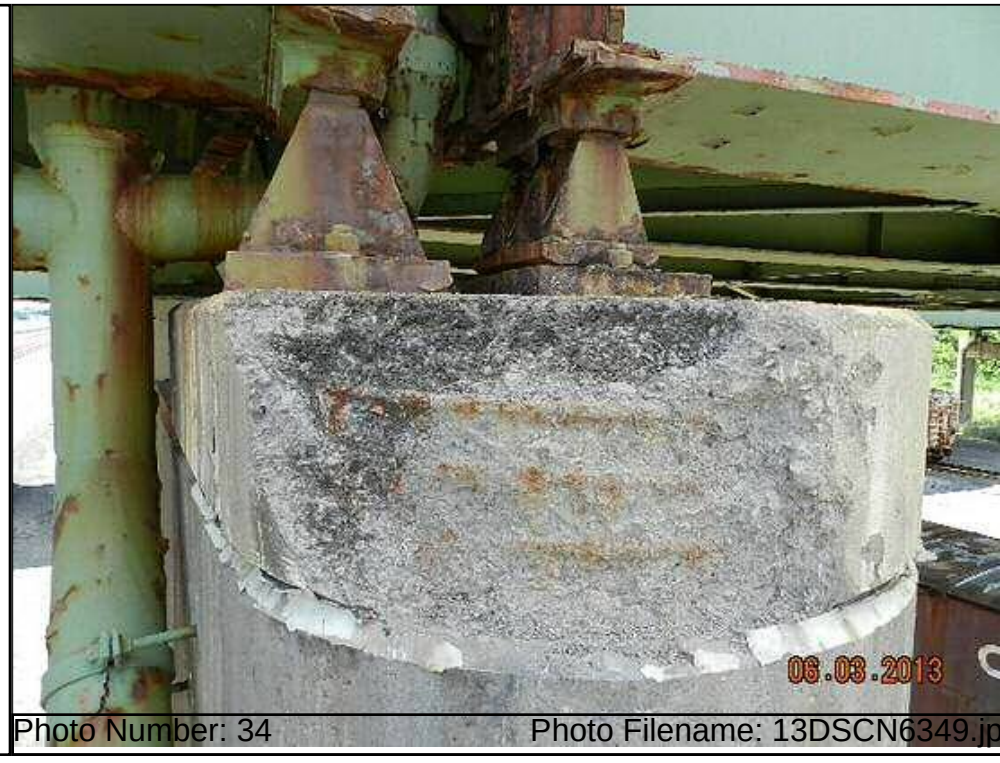

Photo Number: 34 Photo Filename: 13DSCN6349.jpg

Inspection Date: 7/9/2013 RC: 33 BIN: 1093572

Inspection Photos in Photo Number Order

Carried: 481I 481I33012069 Crossed: CSX TRANS/AMTRAK CheckValue: 1,866,324,811

Pier 5 Underside & Begin Face of Cap Beam - Right Side



Photo Number: 35 Photo Filename: 13DSCN6354.jpg

Pier 5 Column 1



Photo Number: 36 Photo Filename: 13DSCN6353.jpg

Inspection Date: 7/9/2013 RC: 33 BIN: 1093572

Inspection Photos in Photo Number Order

Carried: 481I 481I33012069 Crossed: CSX TRANS/AMTRAK CheckValue: 1,866,324,811

Pier 5 Column 3 Right Face



Photo Number: 37 Photo Filename: 13DSCN6355.jpg

Pier 6 Joint



Photo Number: 38 Photo Filename: 13DSCN6420.jpg

Inspection Date: 7/9/2013 RC: 33 BIN: 1093572

Inspection Photos in Photo Number Order

Carried: 481I 481I33012069 Crossed: CSX TRANS/AMTRAK CheckValue: 1,866,324,811

Pier 6 Joint Bay 3



Photo Number: 39 Photo Filename: 13DSCN6423.jpg

Pier 6 Bearing #2 - Typical Spans 1-14



Photo Number: 40 Photo Filename: 13DSCN6422.jpg

Inspection Date: 7/9/2013 RC: 33 BIN: 1093572

Inspection Photos in Photo Number Order

Carried: 481I 481I33012069 Crossed: CSX TRANS/AMTRAK CheckValue: 1,866,324,811

Pier 7 Bearing #1 - Typical Spans 1-14



Photo Number: 41 Photo Filename: 13DSCN6425.jpg

Pier 7 Column 1 Begin Face

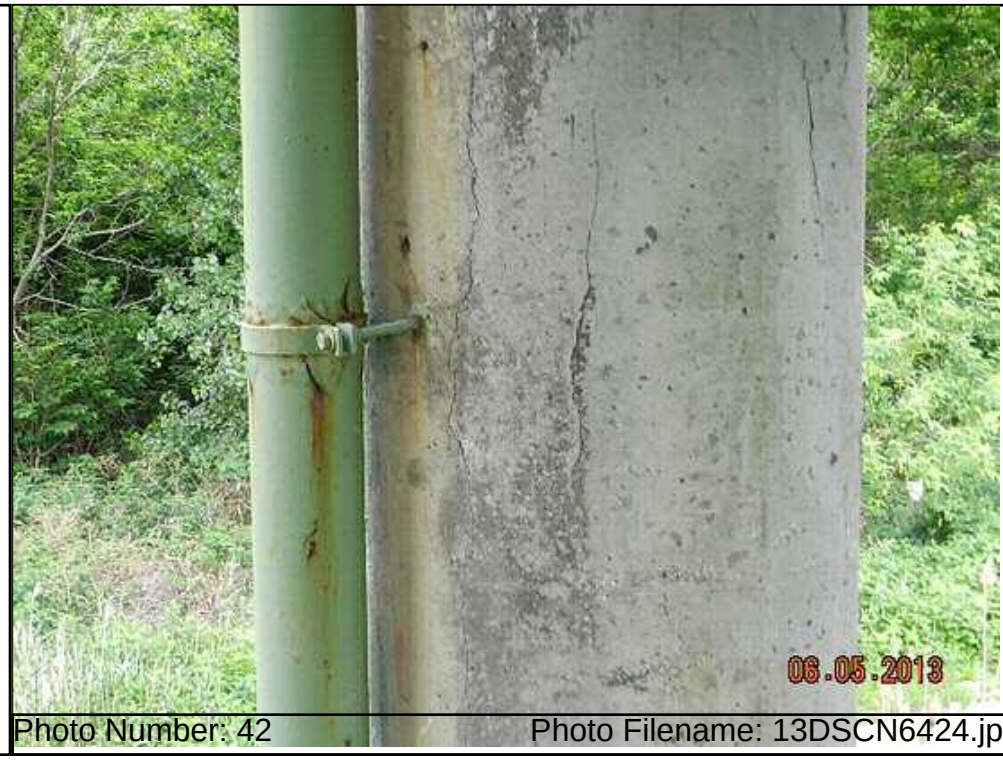

Photo Number: 42 Photo Filename: 13DSCN6424.jpg

Inspection Date: 7/9/2013 RC: 33 BIN: 1093572

Inspection Photos in Photo Number Order

Carried: 481I 481I33012069 Crossed: CSX TRANS/AMTRAK CheckValue: 1,866,324,811

Pier 8 Begin Bearing #1



Photo Number: 43 Photo Filename: 13DSCN6427.jpg

Pier 8 End Bearing #1 - Bearing #4 Similar - Typical Spans 1-14



Photo Number: 44 Photo Filename: 13DSCN6428.jpg

Inspection Date: 7/9/2013 RC: 33 BIN: 1093572

Inspection Photos in Photo Number Order

Carried: 481I 481I33012069 Crossed: CSX TRANS/AMTRAK CheckValue: 1,866,324,811

Span 10 Right Parapet



Photo Number: 45 Photo Filename: 13DSCN6419.jpg

Pier 10 Begin Right Downspout - Typical Spans 11 & 12



Photo Number: 46 Photo Filename: 13DSCN6429.jpg

Inspection Date: 7/9/2013 RC: 33 BIN: 1093572

Inspection Photos in Photo Number Order

Carried: 481I 481I33012069 Crossed: CSX TRANS/AMTRAK CheckValue: 1,866,324,811

Span 11 Left Fascia Girder



Photo Number: 47 Photo Filename: 13DSCN6430.jpg

Span 11 Girder 3 - Typical All Spans



Photo Number: 48 Photo Filename: 13DSCN6431.jpg

Inspection Date: 7/9/2013 RC: 33 BIN: 1093572

Inspection Photos in Photo Number Order

Carried: 481I 481I33012069 Crossed: CSX TRANS/AMTRAK CheckValue: 1,866,324,811

Pier 11 Pedestal 1 Right Face - Left Face Similar



Photo Number: 49 Photo Filename: 13DSCN6434.jpg

Pier 11 Column 3



Photo Number: 50 Photo Filename: 13DSCN6433.jpg

Inspection Date: 7/9/2013 RC: 33 BIN: 1093572

Inspection Photos in Photo Number Order

Carried: 481I 481I33012069 Crossed: CSX TRANS/AMTRAK CheckValue: 1,866,324,811

Pier 12 Bay 1 Joint Header - Typical Spans 13 & 14



Photo Number: 51 Photo Filename: 13DSCN6435.jpg

Pier 12 Bay 1 Joint Header - Typical Spans 13 & 14



Photo Number: 52 Photo Filename: 13DSCN6439.jpg

Inspection Date: 7/9/2013 RC: 33 BIN: 1093572

Inspection Photos in Photo Number Order

Carried: 481I 481I33012069 Crossed: CSX TRANS/AMTRAK CheckValue: 1,866,324,811

Pier 12 End Bearing #4



Photo Number: 53 Photo Filename: 13DSCN6441.jpg

Top of Span 13



Photo Number: 54 Photo Filename: 13DSCN6418.jpg

Inspection Date: 7/9/2013 RC: 33 BIN: 1093572

Inspection Photos in Photo Number Order

Carried: 481I 481I33012069 Crossed: CSX TRANS/AMTRAK CheckValue: 1,866,324,811

Top of Span 13

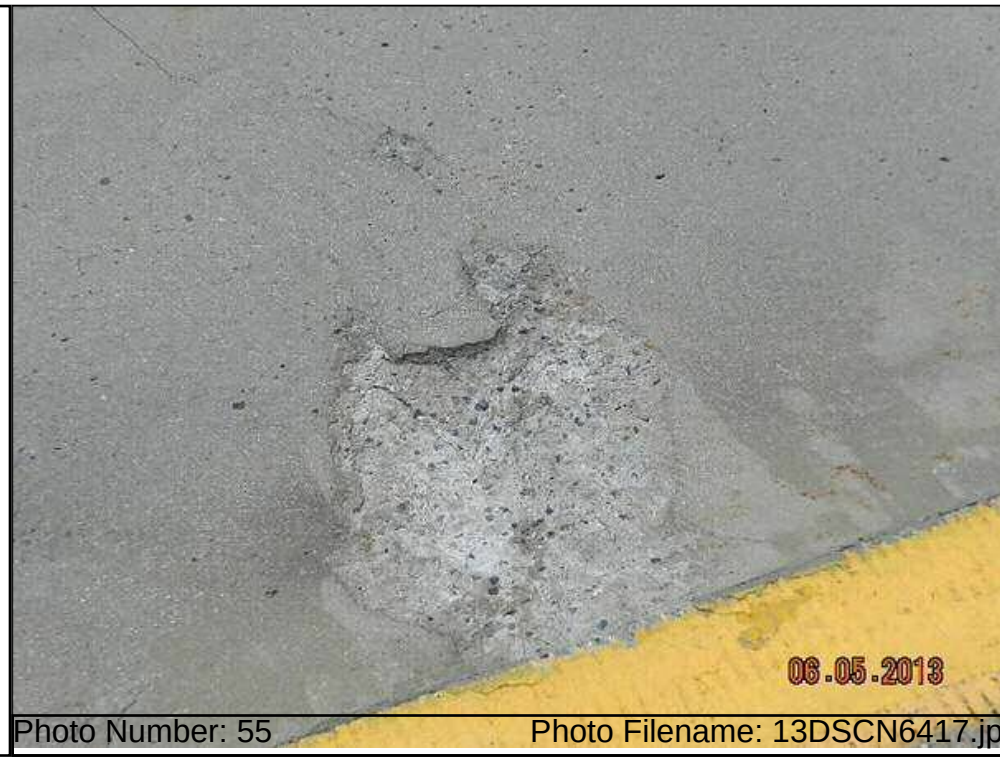

Photo Number: 55 Photo Filename: 13DSCN6417.jpg

Pier 13 Pedestal 1 - Pier 14 Pedestal 1 Similar



Photo Number: 56 Photo Filename: 13DSCN6445.jpg

Inspection Date: 7/9/2013 RC: 33 BIN: 1093572

Inspection Photos in Photo Number Order

Carried: 481I 481I33012069 Crossed: CSX TRANS/AMTRAK CheckValue: 1,866,324,811

Pier 13 End Right Face of Cap Beam



Photo Number: 57 Photo Filename: 13DSCN6442.jpg

Span 14 Left Parapet - Typical All Spans



Photo Number: 58 Photo Filename: 13DSCN6446.jpg

Inspection Date: 7/9/2013 RC: 33 BIN: 1093572

Inspection Photos in Photo Number Order

Carried: 481I 481I33012069 Crossed: CSX TRANS/AMTRAK CheckValue: 1,866,324,811

End Backwall Bay 2



Photo Number: 59 Photo Filename: 13DSCN6363.jpg

End Right Cheekwall - Right Face



Photo Number: 60 Photo Filename: 13DSCN6443.jpg

Inspection Date: 7/9/2013 RC: 33 BIN: 1093572

Inspection Photos in Photo Number Order

Carried: 481I 481I33012069 Crossed: CSX TRANS/AMTRAK CheckValue: 1,866,324,811

End Right Cheekwall



Photo Number: 61 Photo Filename: 13DSCN6444.jpg

Span 15 Right Fascia Girder - Typical All Spans



Photo Number: 62 Photo Filename: 13DSCN6364.jpg

Inspection Date: 7/9/2013 RC: 33 BIN: 1093572

Inspection Sketches in Sketch SysID Order

Carried: 481I 481I33012069 Crossed: CSX TRANS/AMTRAK CheckValue: 1,866,324,811

Sketch ID: 3A1310935720000 Sketch Filename: photo_plan_1.13

General Sketch for Bridge
Referenced Photos:

Photo Location Plan - Spans 1-3

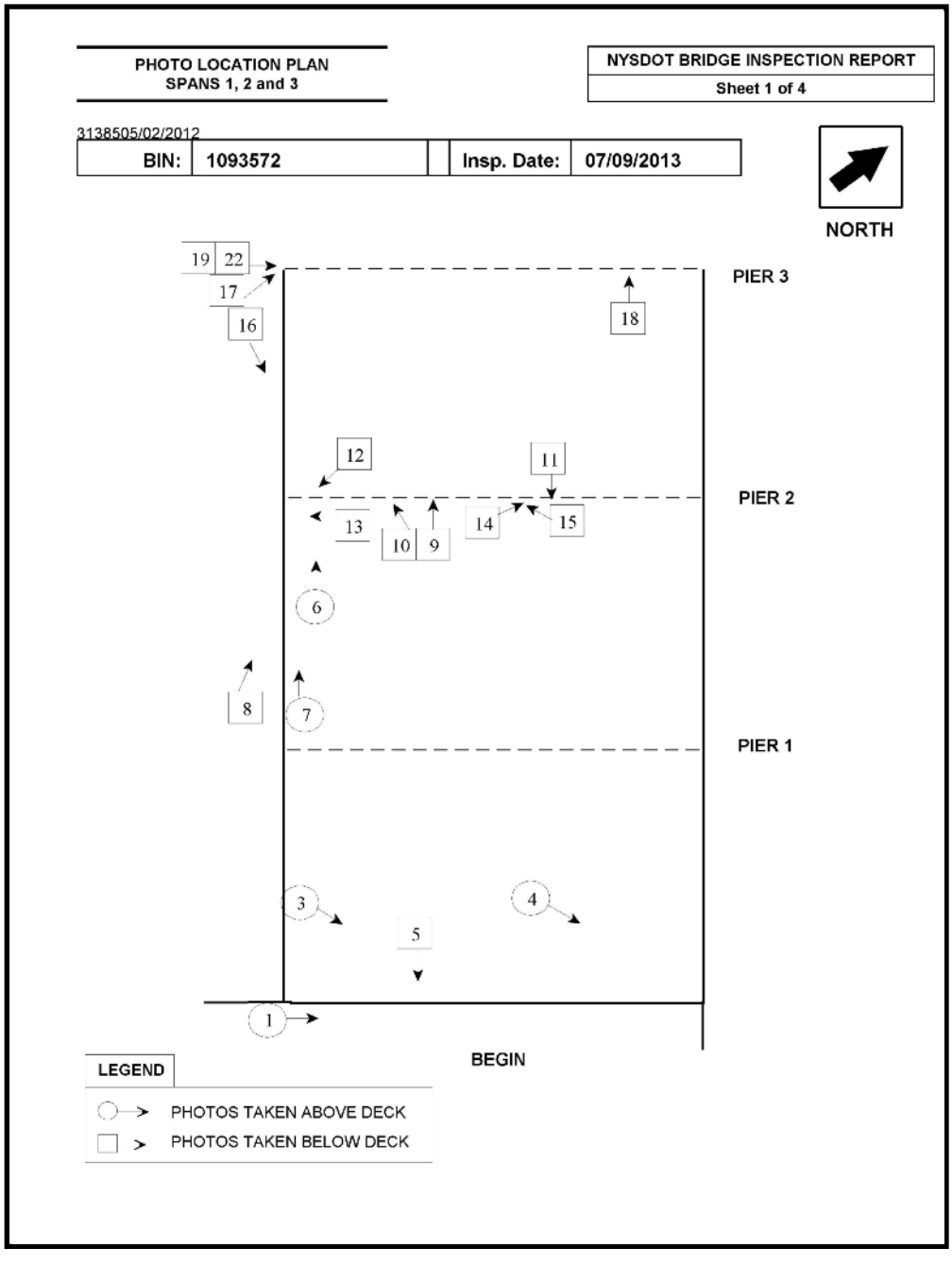

Inspection Date: 7/9/2013 RC: 33 BIN: 1093572

Inspection Sketches in Sketch SysID Order

Carried: 481I 481I33012069 Crossed: CSX TRANS/AMTRAK CheckValue: 1,866,324,811

Sketch ID: 3A1310935720001 Sketch Filename: photo_plan_2.13

General Sketch for Bridge
Referenced Photos:

Photo Location Plan - Spans 4-6

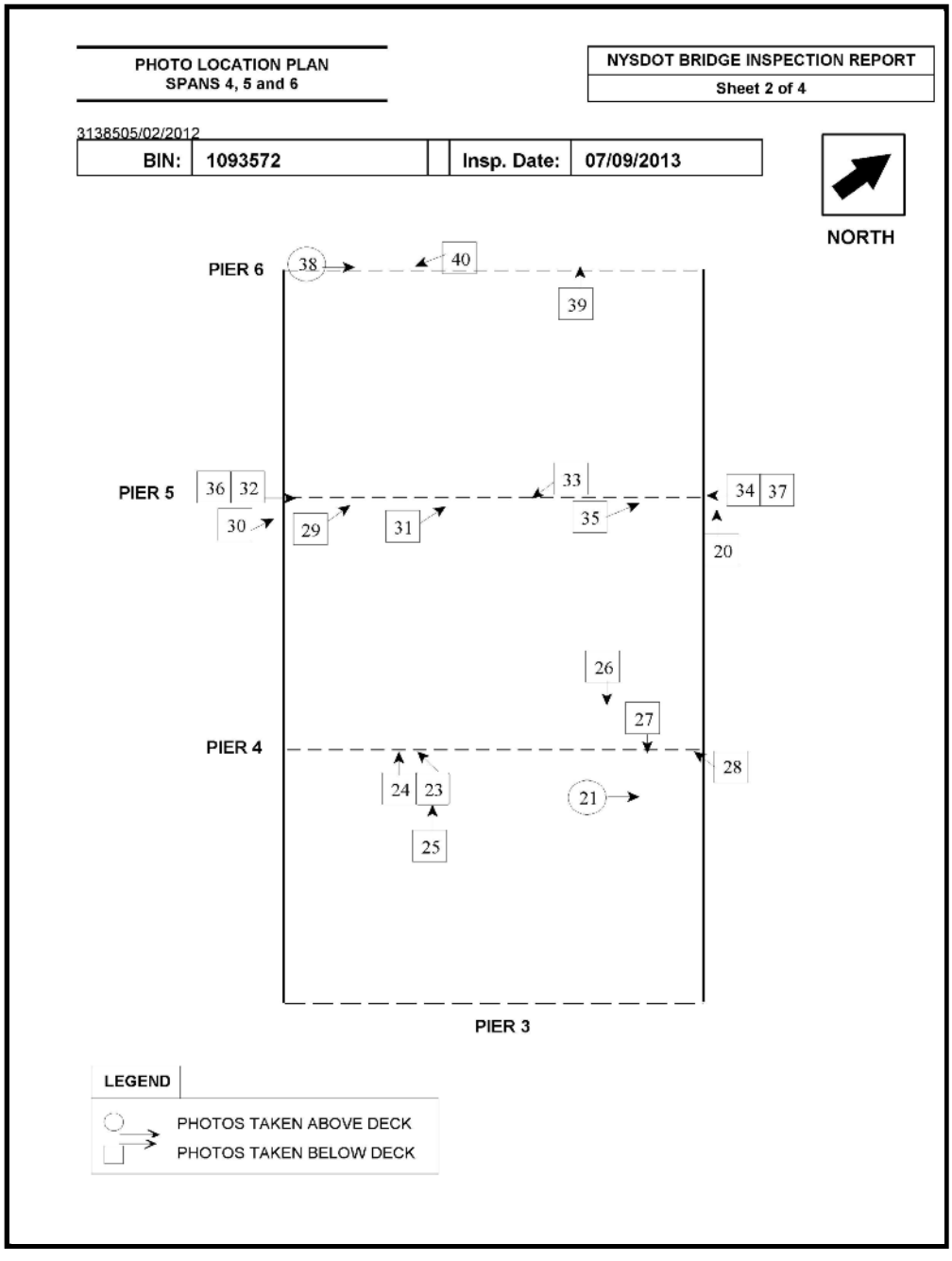

Inspection Date: 7/9/2013 RC: 33 BIN: 1093572

Inspection Sketches in Sketch SysID Order

Carried: 481I 481I33012069 Crossed: CSX TRANS/AMTRAK CheckValue: 1,866,324,811

Sketch ID: 3A1310935720002 Sketch Filename: photo_plan_3.13

General Sketch for Bridge
Referenced Photos:

Photo Location Plan - Spans 7-11

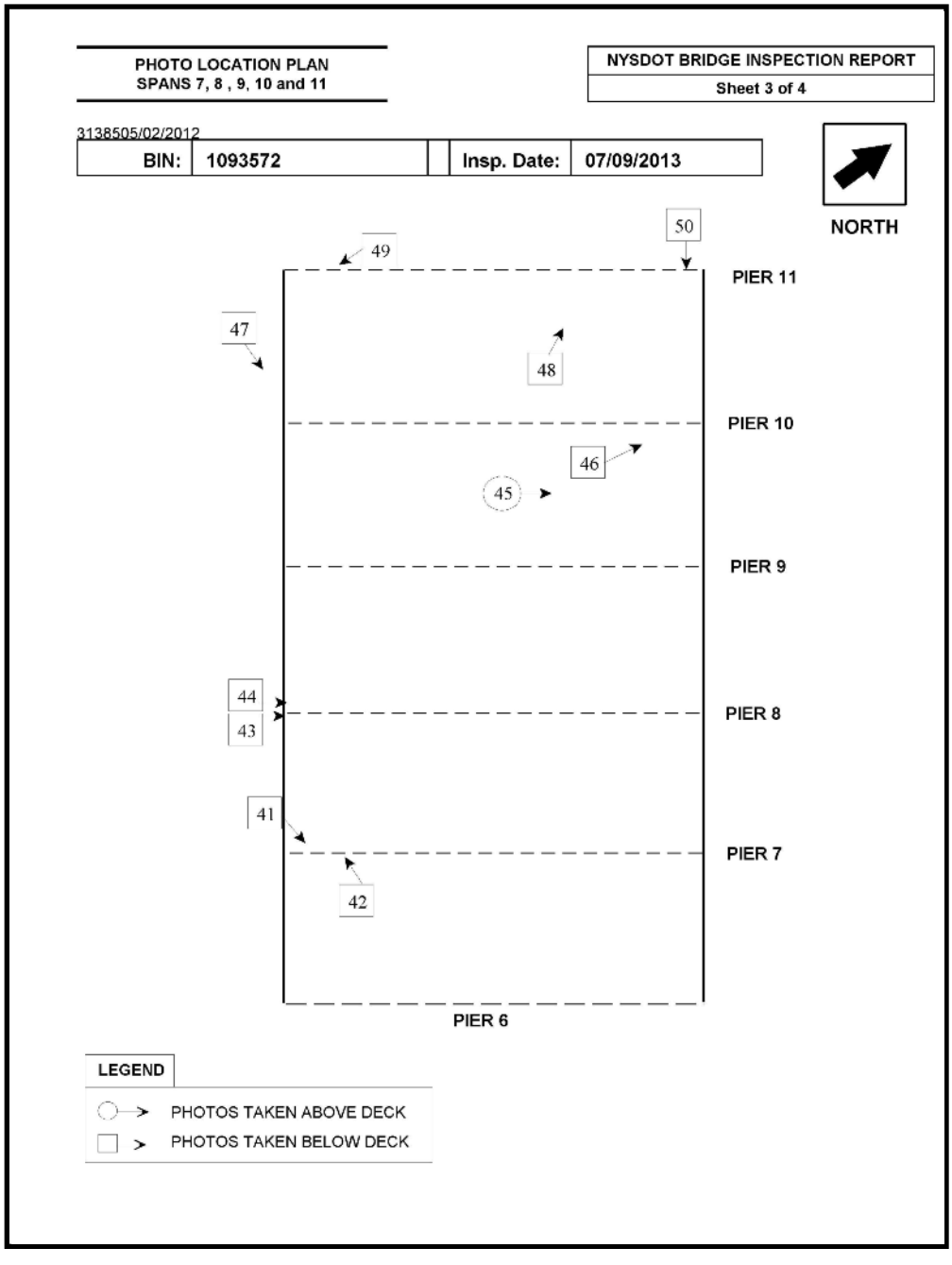

Inspection Date: 7/9/2013 RC: 33 BIN: 1093572

Inspection Sketches in Sketch SysID Order

Carried: 481I 481I33012069 Crossed: CSX TRANS/AMTRAK CheckValue: 1,866,324,811

Sketch ID: 3A1310935720003 Sketch Filename: photo_plan_4.13

General Sketch for Bridge
Referenced Photos:

Photo Location Plan - Spans 12-15

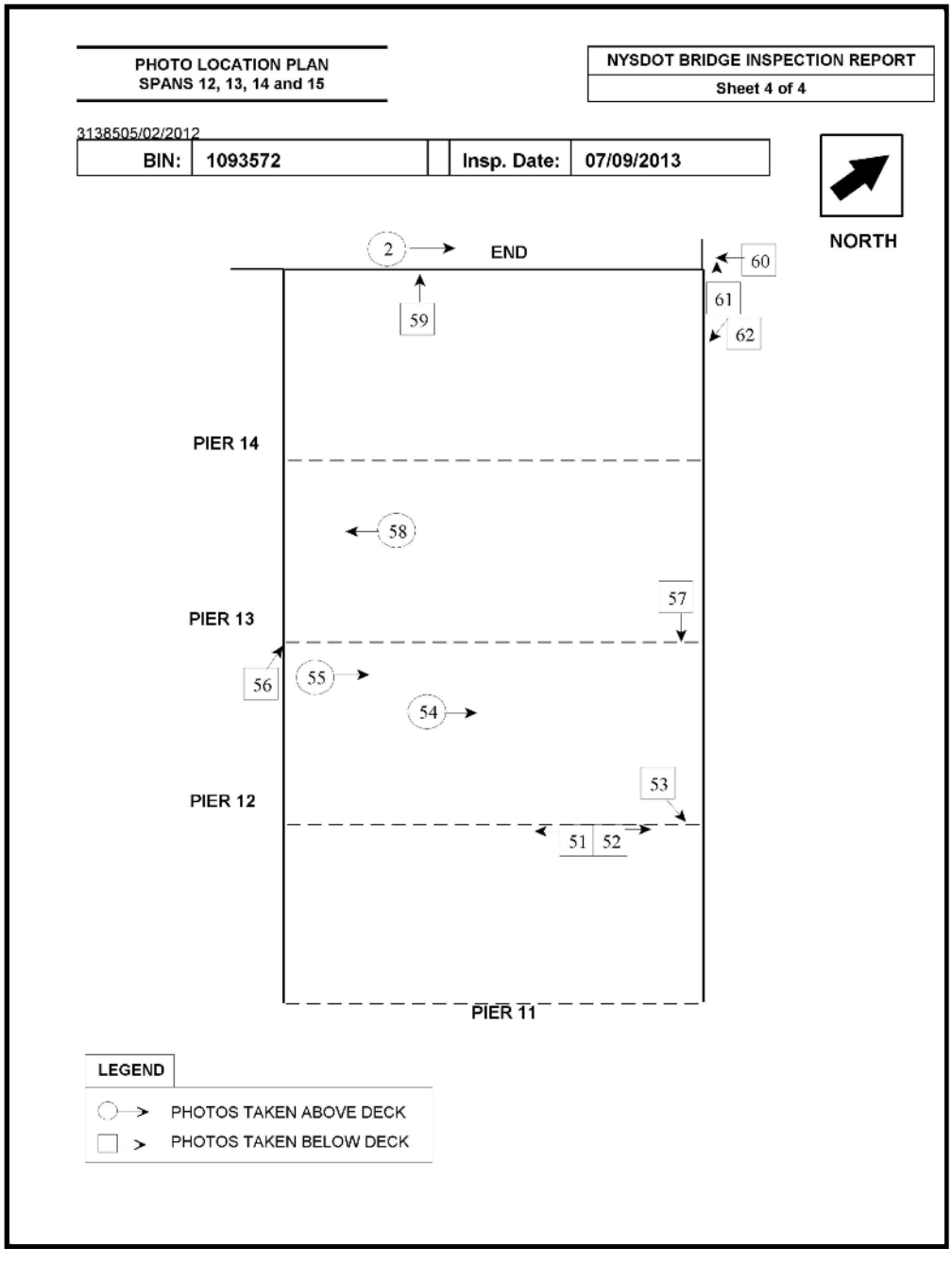

Inspection Date: 7/9/2013 RC: 33 BIN: 1093572

Inspection Sketches in Sketch SysID Order

Carried: 481I 481I33012069 Crossed: CSX TRANS/AMTRAK CheckValue: 1,866,324,811

Sketch ID: 3A1310935720004 Sketch Filename: LdRat.13

General Sketch for Bridge
Referenced Photos:

Load Rating Field Check Form

NYSDOT BRIDGE INSPECTION REPORT			
SHEET	1	OF	1

LOAD RATING FIELD CHECK FORM

BIN:	1093572		Insp. Date:	07/09/2013

Dead Load - Note Changes since Last load Rating or state "NONE":

None

Section Loss - Note locations and amount of loss on each girder or state "NONE":

No significant change since the last inspection.

Additional Notes:

None

Attachments:

None

Team Leader: James W. Gorzynski, NYS PE #53772

Inspection Date: 7/9/2013 RC: 33 BIN: 1093572

Inspection Sketches in Sketch SysID Order

Carried: 481I 481I33012069 Crossed: CSX TRANS/AMTRAK CheckValue: 1,866,324,811

Sketch ID: 3A1310935720005 Sketch Filename: RR_Clearance.13

General Sketch for Bridge
Referenced Photos:

Railroad Vertical Clearances

PLAN VIEW - RAILROAD VERTICAL CLEARANCES (Feet)

NYSDOT BRIDGE INSPECTION REPORT			
SHEET	1	OF	1

Insp. Date:	07/09/2013	BIN:	1093572

NORTH

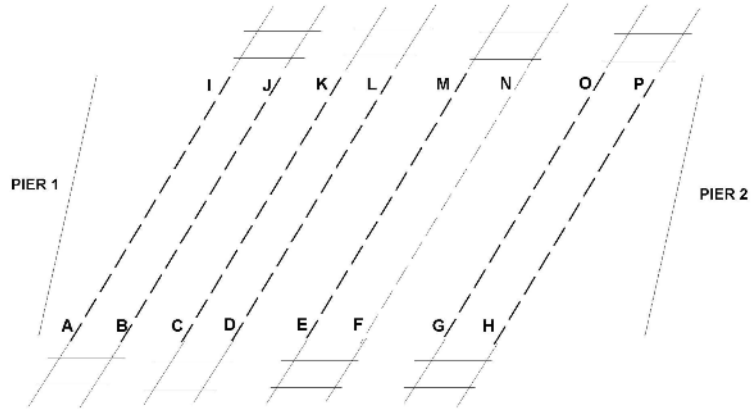

PLAN (NTS)

YEAR>	2013			YEAR>	2013		
Pt #				Pt #			
A	25'+			I	24'-11 3/16"		
B	25'+			J	25'+		
C	24'-2 3/8"			K	24'-1 3/16"		
D	24'-1 5/16"			L	24'-1"		
E	24'-9 1/4"			M	24'-8 3/8"		
F	24'-9 3/8"			N	24'-8 9/16"		
G	24'-9 3/4"			O	24'-10"		
H	24'-10 5/8"			P	24'-9 1/2"		

NOTES: 2013 - Form created and entered in BIPPI.
Span 4 Tracks 5 & 6 Vertical Clearance = 26'+, Span 5 Tracks 7-11 Vertical Clearance = 26'+.

Inspection Date: 7/9/2013 RC: 33 BIN: 1093572

Inspection Sketches in Sketch SysID Order

Carried: 481I 481I33012069 Crossed: CSX TRANS/AMTRAK CheckValue: 1,866,324,811

Sketch ID: 3A1310935720006 Sketch Filename: Downspout_Doc.13

Span 002 -- Deck Elements: Scuppers -- Rated 4, Was 4
Span 003 -- Deck Elements: Scuppers -- Rated 4, Was 4
Span 004 -- Deck Elements: Scuppers -- Rated 4, Was 4
Span 005 -- Deck Elements: Scuppers -- Rated 4, Was 4
Span 006 -- Deck Elements: Scuppers -- Rated 4, Was 4
Span 007 -- Deck Elements: Scuppers -- Rated 4, Was 4
Span 008 -- Deck Elements: Scuppers -- Rated 4, Was 4
Span 009 -- Deck Elements: Scuppers -- Rated 4, Was 4
Span 010 -- Deck Elements: Scuppers -- Rated 4, Was 4
Span 011 -- Deck Elements: Scuppers -- Rated 4, Was 4
Span 012 -- Deck Elements: Scuppers -- Rated 4, Was 4
Span 013 -- Deck Elements: Scuppers -- Rated 4, Was 4
Span 014 -- Deck Elements: Scuppers -- Rated 4, Was 4
Span 015 -- Deck Elements: Scuppers -- Rated 4, Was 4

Referenced Photos: "21", "29", "30", "46"

Scupper Downspout Documentation

Inspection Date: 7/9/2013 RC: 33 BIN: 1093572

Inspection Sketches in Sketch SysID Order

Carried: 481I 481I33012069 Crossed: CSX TRANS/AMTRAK CheckValue: 1,866,324,811

Sketch ID: 3A1310935720006 Sketch Filename: Downspout_Doc.13

SCUPPER DOWNSPOUT DOCUMENTATION

NYSDOT BRIDGE INSPECTION REPORT			
SHEET	1	OF	1

Insp. Date:	07/09/2013	BIN:	1093572

PIER NUMBER	BEGIN FACE		END FACE	
	Left	Right	Left	Right
1	--	--	O	O
2	--	--	O	O
3	--	--	O	O
4	--	--	O	O
5	O	O	--	--
6	O	O	--	--
7	O	O	--	--
8	N	N	--	--
9	N	N	--	--
10	--	N	--	--
11	--	N	--	--
12	--	N	--	--
13	--	N	--	--
14	--	N	--	--

KEY:
O = Older Ductile Iron Downspout
N = Newer PVC Downspout
-- = No Downspout

Inspection Date: 7/9/2013 RC: 33 BIN: 1093572

Gen. Rec., Postings, Federal Ratings, etc.

Carried: 481I 481I33012069 Crossed: CSX TRANS/AMTRAK CheckValue: 1,866,324,811

Overall Condition:

GENERAL RECOMMENDATION: 5

Computed Condition Rating: 4.444

Problems Requiring Action:

NO Further Investigation Needed

NO Flags Issued

POSTINGS:

Inspector Confirmed existing Posting data as correct.
Posted Vertical Clearance ON the bridge is: No Posting
Posted Vertical Clearance UNDER the bridge is: No Posting
No Load Restriction is posted on this bridge

Overloads Observed:

NO Overload Vehicles were observed on this bridge

FEDERAL RATINGS:

NBI Deck Condition: 6
NBI Superstruct Condition: 6
NBI Substruct Condition: 5
NBI Channel Condition: N
NBI Culvert Condition: N

Diving Inspection Needs:

Diving Inspection Required? No Date of Last Diving Inspection: No Date

Inventory Problems:

Inventory Problems Exist? No

Miscellaneous:

Time Required to Inspect Bridge: 12.5 Hours

Lane Closure Needs: By Contract for 12 Hours

Railroad Flagging is Required for 8.0 Hours

No Pedestrian Fence

No Snow Fence

The BIN Plate is in OK condition

Inspection Date: 7/9/2013 RC: 33 BIN: 1093572

Gen. Rec., Postings, Federal Ratings, etc.

Carried: 481I 481I33012069 Crossed: CSX TRANS/AMTRAK CheckValue: 1,866,324,811

Special Emphasis Inspection Required:

Non-Redundant/Fracture Critical Members - No
Pin and Hangers - No
Fatigue-Prone Welds - Yes
Non-Categorized Fatigue-Prone Details - No
Other (Specified in Text) - No

Special Emphasis Details:

2013 - A 100% hands-on inspection was performed on all special emphasis details.

Category 'D' welds at the ends of 1'-0" radius gusset plates attached to bottom (tension) flanges of exterior and first interior girders in Spans 2 through 6 and in Span 10 as shown on Sheets 21, 22 & 26 of the plans.

General Notes To the Next Inspector:

2013 - A CSX Railroad Flagman is required for access to Spans 1 - 5 for use of a 60' UBIU and for access
to Piers 1 to 4.
Access to Spans 6 - 15 from above is with a 60' UBIU.
Access to Spans 6 - 15 from below is through a CSX rail yard gate and along a maintenance road between the two I481 bridges.

The bridge is at CSX Railroad Milepost QC 285.23.

The BIN Plate is mounted on the begin right wingwall.

Improvements Observed:

2013 - None

Inspection Date: 7/9/2013 RC: 33 BIN: 1093572

Review Progress and Personnel Present at Inspection

Carried: 481I 481I33012069 Crossed: CSX TRANS/AMTRAK CheckValue: 1,866,324,811

Inspection Submission Status:

Submitted to QC Engineer on: 9/4/2013
QC Submission Number: A0331701

QC Review Completed: 9/4/2013
QC Engineer: Stephen L. Gauthier

Submitted to Liaison Engineer on: 9/4/2013
Liaison Submission Number: 03327

Liaison Review Completed: 9/9/2013
Liaison Engineer: TODD M. HERMANN

Submitted for BIIS Processing on: 9/9/2013
BIIS Submission Number: .kp1

Current Status: Keypunched, Sent to BIIS
Check Value: 1,866,324,811

Personnel Present During Inspection:

James W. Gorzynski - Team Leader
Debra A. Tomsa - Assistant Team Leader
Bill Buckland - CP Ward
James Flynn - NYSDOT M.O.
Todd Hermann - NYDSOT M.O.
Bill LeBlanc - NYSDOT M.O.
Mark Maddox - CSX
Matt Pasquale - C.P.Ward
Kevin Smith - Flagman

Inspection Date: 7/9/2013 RC: 33 BIN: 1093572

Inspection Access Requirements

Carried: 481I 481I33012069 Crossed: CSX TRANS/AMTRAK CheckValue: 1,866,324,811

Equipment Required for Inspection

Access Requirement Changes WERE Noted During This Inspection.
This Listing is from the Inspection.

ACCESS CATEGORIES FOR ENTIRE BRIDGE
- Required: Walking, 60 Ft UBIU (18 m), Railroad Flagman
- Required: Lane Closure, Shadow Vehicle

ACCESS CATEGORIES FOR SPAN 1
- Required: Walking, 60 Ft UBIU (18 m), Lane Closure
- Required: Shadow Vehicle

ACCESS CATEGORIES FOR SPAN 2
- Required: Walking, 60 Ft UBIU (18 m), Railroad Flagman
- Required: Lane Closure, Shadow Vehicle

ACCESS CATEGORIES FOR SPAN 3
- Required: Walking, 60 Ft UBIU (18 m), Railroad Flagman
- Required: Lane Closure, Shadow Vehicle

ACCESS CATEGORIES FOR SPAN 4
- Required: Walking, 60 Ft UBIU (18 m), Railroad Flagman
- Required: Lane Closure, Shadow Vehicle

ACCESS CATEGORIES FOR SPAN 5
- Required: Walking, 60 Ft UBIU (18 m), Railroad Flagman
- Required: Lane Closure, Shadow Vehicle

ACCESS CATEGORIES FOR SPAN 6
- Required: Walking, 60 Ft UBIU (18 m), Medium Lift, Lane Closure
- Required: Shadow Vehicle

ACCESS CATEGORIES FOR SPAN 7
- Required: Walking, 60 Ft UBIU (18 m), Medium Lift, Lane Closure
- Required: Shadow Vehicle

ACCESS CATEGORIES FOR SPAN 8
- Required: Walking, 60 Ft UBIU (18 m), Medium Lift, Lane Closure
- Required: Shadow Vehicle

ACCESS CATEGORIES FOR SPAN 9
- Required: Walking, 60 Ft UBIU (18 m), Medium Lift, Lane Closure
- Required: Shadow Vehicle

ACCESS CATEGORIES FOR SPAN 10
- Required: Walking, 60 Ft UBIU (18 m), Medium Lift, Lane Closure
- Required: Shadow Vehicle

ACCESS CATEGORIES FOR SPAN 11
- Required: Walking, 60 Ft UBIU (18 m), Medium Lift, Lane Closure
- Required: Shadow Vehicle

ACCESS CATEGORIES FOR SPAN 12
- Required: Walking, 60 Ft UBIU (18 m), Medium Lift, Lane Closure

Equipment Required for Inspection - continued

Required: Shadow Vehicle

ACCESS CATEGORIES FOR SPAN 13
Required: Walking, 60 Ft UBIU (18 m), Medium Lift, Lane Closure
Required: Shadow Vehicle

ACCESS CATEGORIES FOR SPAN 14
Required: Walking, 60 Ft UBIU (18 m), Medium Lift, Lane Closure
Required: Shadow Vehicle

ACCESS CATEGORIES FOR SPAN 15
Required: Walking, 60 Ft UBIU (18 m), Medium Lift, Lane Closure
Required: Shadow Vehicle

Inspection Date: 7/9/2013 RC: 33 BIN: 1093572

Culvert Measurements

Carried: 481I 481I33012069 Crossed: CSX TRANS/AMTRAK CheckValue: 1,866,324,811

Culvert Measurements

NO CULVERT DATA FOR BIN 1093572

Standard Photos **RC: 33 BIN: 1093572**

Carried: 481I 481I33012069 Crossed: CSX TRANS/AMTRAK

1093572_LOCATION_MAP.JPG

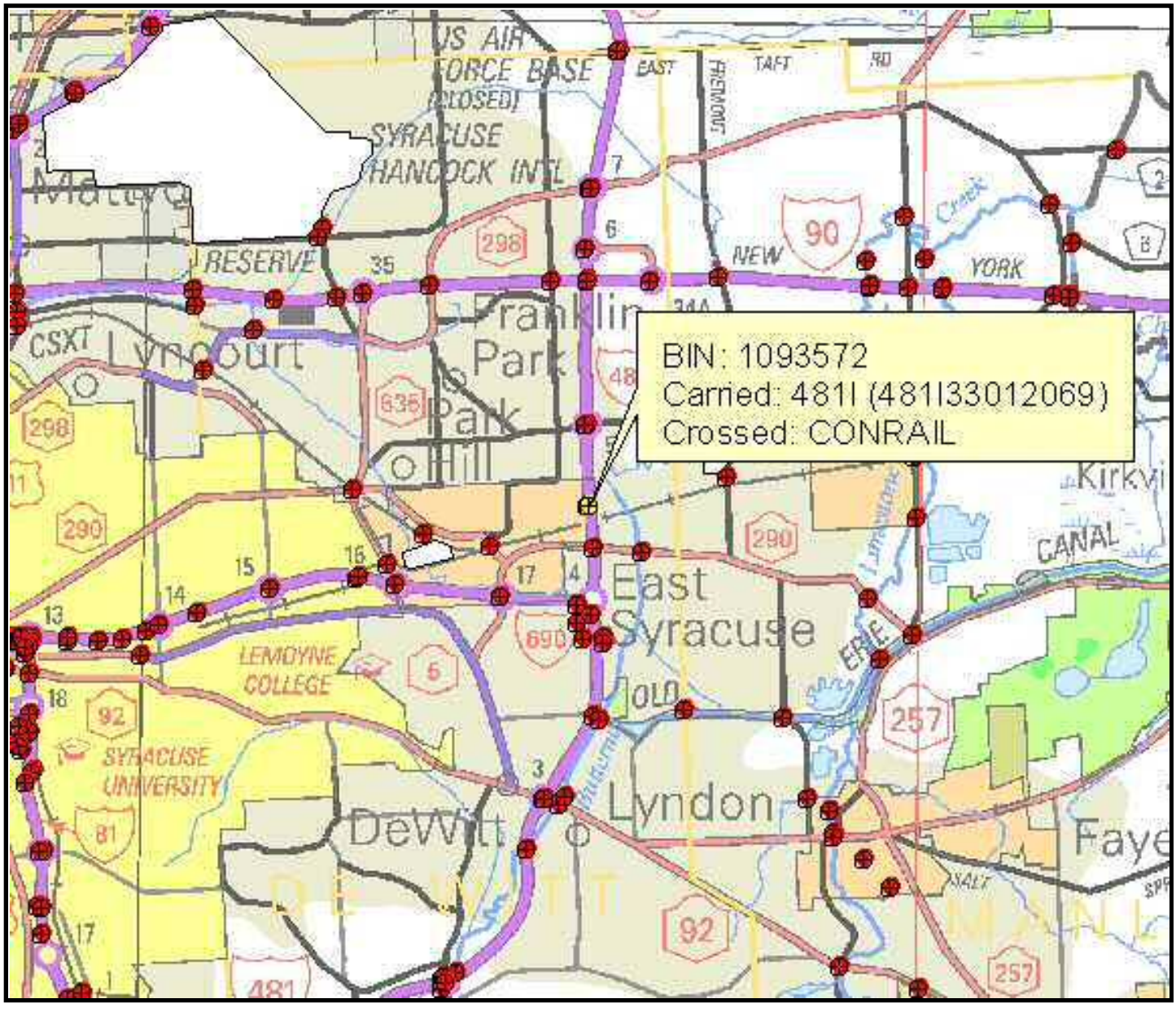

Standard Photos **RC: 33 BIN: 1093572**

Carried: 481I 481I33012069 Crossed: CSX TRANS/AMTRAK

1093572_QUAD_MAP.JPG

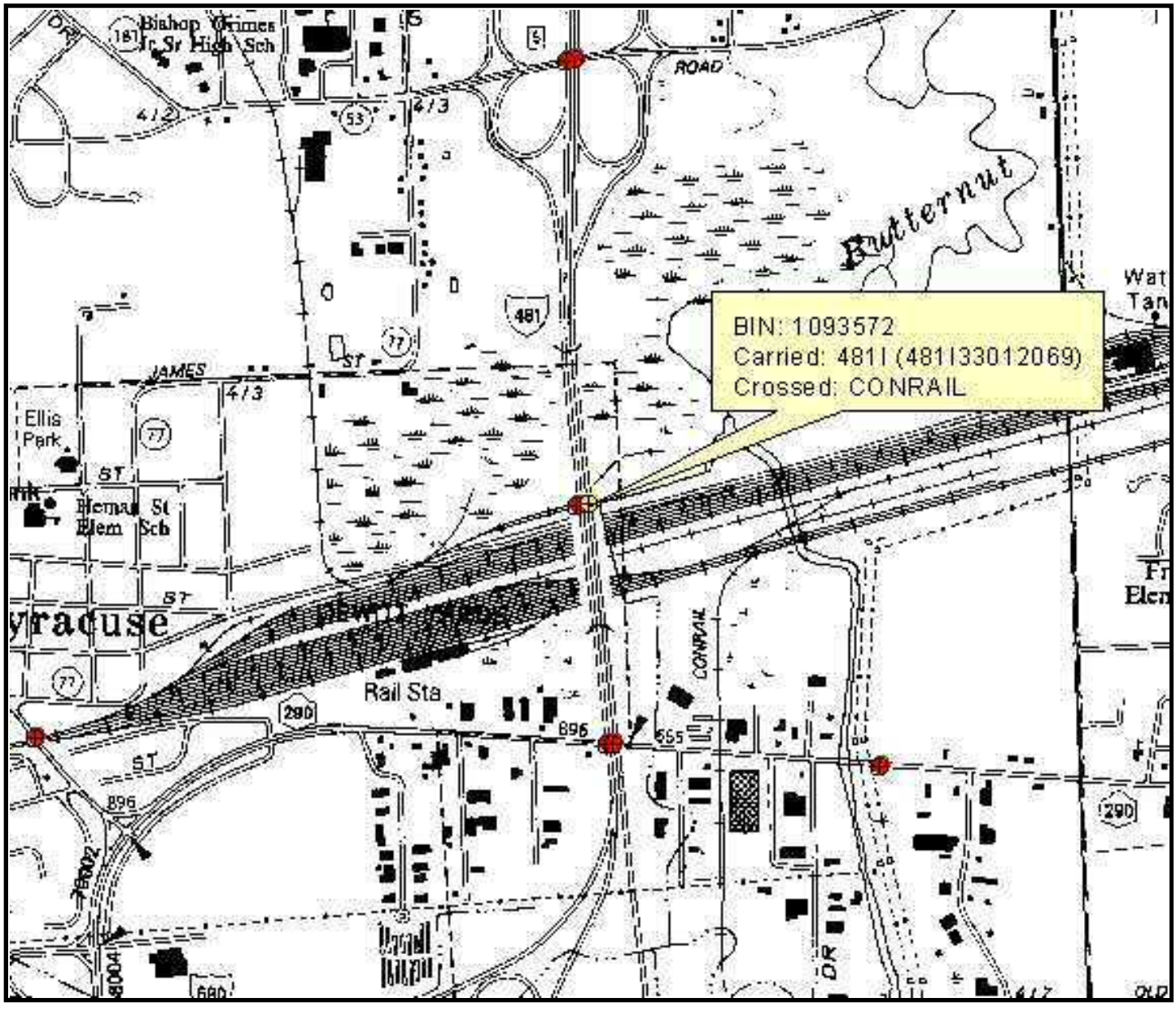

Standard Photos **RC: 33 BIN: 1093572**

Carried: 481I 481I33012069 Crossed: CSX TRANS/AMTRAK

BeginApproach11.jpg



Standard Photos **RC: 33 BIN: 1093572**

Carried: 481I 481I33012069 Crossed: CSX TRANS/AMTRAK

EndAbutment11.jpg



Standard Photos **RC: 33 BIN: 1093572**

Carried: 481I 481I33012069 Crossed: CSX TRANS/AMTRAK

EndApproach11.jpg



Standard Photos **RC: 33 BIN: 1093572**

Carried: 481I 481I33012069 Crossed: CSX TRANS/AMTRAK

EndRightWingwall11.jpg

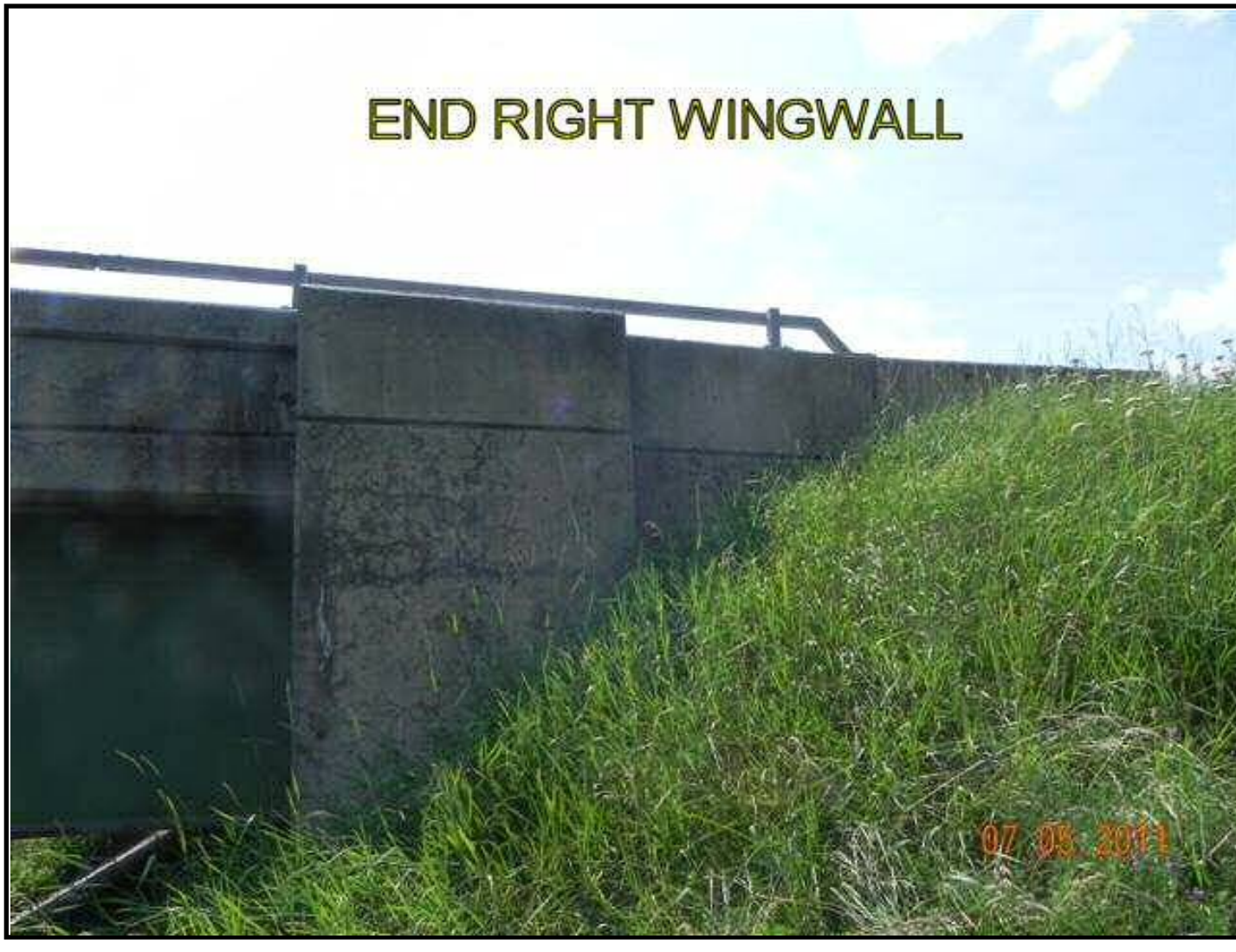

Standard Photos **RC: 33 BIN: 1093572**

Carried: 481I 481I33012069 Crossed: CSX TRANS/AMTRAK

F2Left11.jpg



Standard Photos **RC: 33 BIN: 1093572**

Carried: 481I 481I33012069 Crossed: CSX TRANS/AMTRAK

F2Right11.jpg



Standard Photos **RC: 33 BIN: 1093572**

Carried: 481I 481I33012069 Crossed: CSX TRANS/AMTRAK

Pier14.11.jpg



Standard Photos **RC: 33 BIN: 1093572**

Carried: 481I 481I33012069 Crossed: CSX TRANS/AMTRAK

RightElevation11.jpg

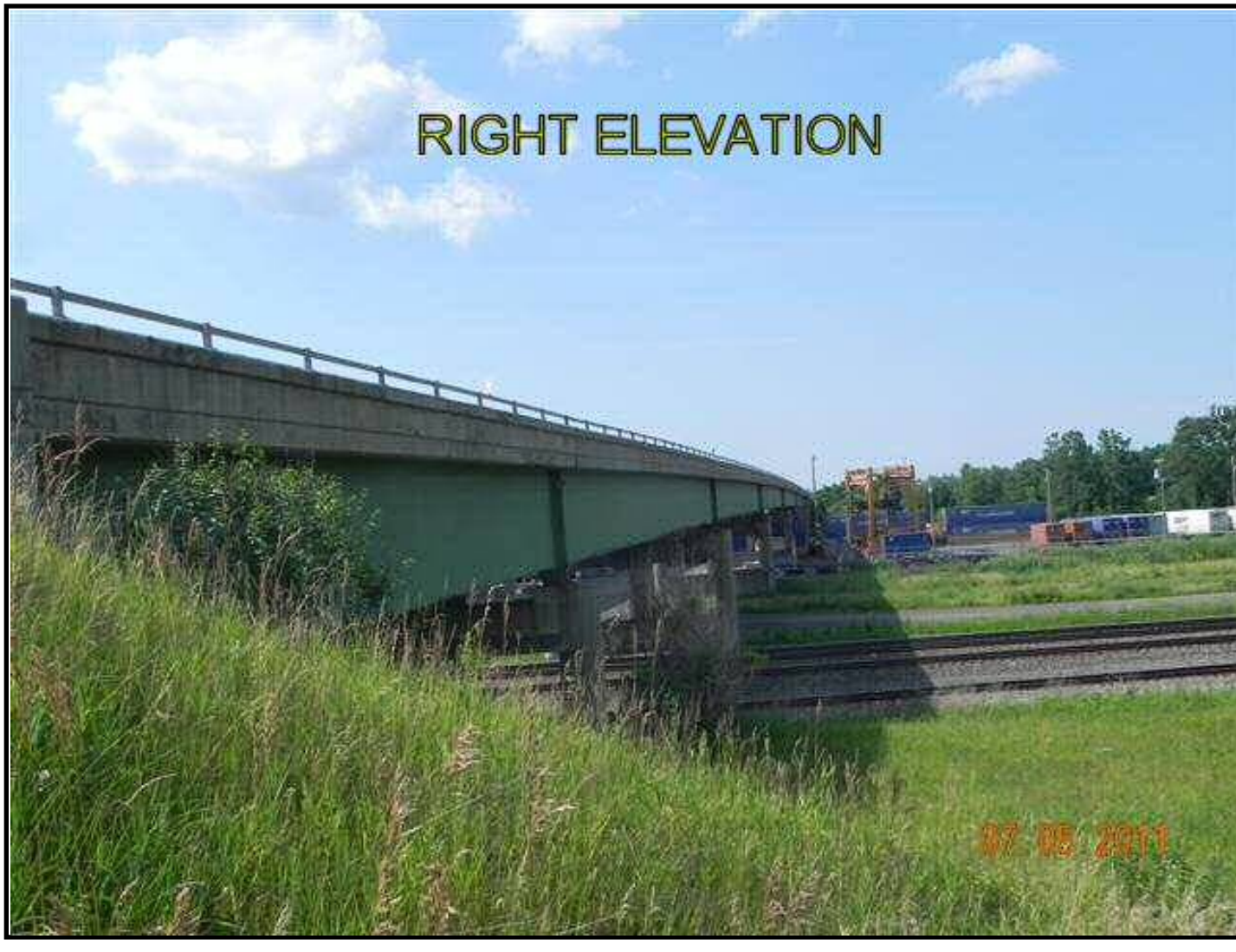

Standard Photos **RC: 33 BIN: 1093572**

Carried: 481I 481I33012069 Crossed: CSX TRANS/AMTRAK

Underside11.jpg



LEVEL 1 LOAD RATING SUMMARY SHEET

Region/County Region 3/Onondaga BIN 1093572
Feature(s) Carried and Crossed I-481 Northbound/CSX Trans/AMTRAK
Date of field inspection upon which Level 1 rating is based 3/25/2014

OVERALL BRIDGE RATTNGS (BASED ON LOWEST RATED ELEMENTS):

Total number of rating units 1

	H inventory	H operating	HS inventory	HS operating
Rating	H 20.78 (tons)	H 34.70 (tons)	HS 37.40 (tons)	HS 62.46 (tons)
Lowest rated element	Interior Girder G2 (Span 4, 5, 6)	Interior Girder G2 (Span 4, 5, 6)	Interior Girder G2 (Span 4, 5, 6)	Interior Girder G2 (Span 4, 5, 6)

Analysis method LFR Comments

Individual Rating Unit Level 1 values:

Rating unit span(s) 1

Main member ratings

	H inventory	H operating	HS inventory	HS operating
Rating	H (tons)	H (tons)	HS (tons)	HS (tons)
Lowest rated element				

Analysis method Comments

Floorbeam ratings

	H inventory	H operating	HS inventory	HS operating
Rating	H (tons)	H (tons)	HS (tons)	HS (tons)
Lowest rated element				

Analysis method Comments

Stringer ratings

	H inventory	H operating	HS inventory	HS operating
Rating	H 20.78 (tons)	H 34.70 (tons)	HS 37.40 (tons)	HS 62.46 (tons)
Lowest rated element	Interior Girder G2 (Span 4, 5, 6)	Interior Girder G2 (Span 4, 5, 6)	Interior Girder G2 (Span 4, 5, 6)	Interior Girder G2 (Span 4, 5, 6)

Analysis method LFR Comments

Certified by Date

Quality Control Engineer Signature Date
Agency or Company represented by certifier

Note:
-If connection ratings govern, record them under stringer ratings for stringer – floorbeam connection, floorbeam ratings for floorbeam-main member connections, etc.
-When Level 1 results indicated the need for load posting or other corrective action, the NYSDOT Regional Structures Engineer shall be notified immediately.
-Load ratings should be filed in the regional office within 60 days of completion of calculations.
-Bridges shall be flagged based on Level I results in accordance with the current NYSDOT flagging procedure.
-Bridge load posting, closure, etc. determinations shall be made as results are being produced.

PARSONS

100 Broadway
New York, NY 10005
Phone: 212-266-8300
Fax: 212-571-6825
www.parsons.com

TECHNICAL MEMORANDUM

FROM: Kian Siang Chau, P.E
NYSPE 082744

DATE: JUNE 10, 2014

RE: SEISMIC SCREENING SUMMARY
NEW YORK STATE DEPARTMENT OF TRANSPORTATION
D031085; PIN 3501.60; I-81

BIN: 1093572 (I-481 Northbound / CSX Trans/Amtrak)

This memorandum summarizes the seismic screening conducted for BIN 1093572 as part of the Interstate 81 Project in Syracuse, NY. The purpose of the screening is to determine if seismic retrofits are warranted at the superstructure to substructure connection, and if further seismic evaluation of the structure is required. This memorandum will give the screening results, retrofits required and recommendations for further seismic evaluation of the structure.

SCREENING PROCEDURE

The seismic screening was performed in accordance with the FHWA Seismic Retrofitting Manual for Highway Structures: Part 1 - Bridges, January 2006. As per the referenced manual, seismic screenings were performed for both lower level and upper level earthquake ground motion. The lower level earthquake ground motion has a reasonable likelihood of occurrence within the life of the bridge (50% probability of exceedance within a 75 year bridge life). The upper level earthquake ground motion has a finite likelihood of occurrence within the life of the bridge (7% probability of exceedance within a 75 year bridge life).

Values for the spectral acceleration for the Syracuse area used in the screening are as follows:

- Lower Level Earthquake Ground Motion for a Short Period (0.2 seconds): $S_S = 0.0251$
- Lower Level Earthquake Ground Motion for a Long Period (1.0 seconds): $S_1 = 0.0076$
- Upper Level Earthquake Ground Motion for a Short Period (0.2 seconds): $S_S = 0.139$
- Upper Level Earthquake Ground Motion for a Long Period (1.0 seconds): $S_1 = 0.047$

These values are considered constant and are the same for all seismic screenings of bridges in the Syracuse area.

The Site Class is based on the soil conditions at the bridge location. It was determined that this parameter has little effect on the results of the seismic screening because the spectral acceleration values for the Syracuse area are small. Based on this, a site class of D was used for all seismic screenings of bridges in the Syracuse area.

Bridge parameters used in the seismic screening were retrieved from the record drawings and WinBolts data.

The seismic screening takes into account the anticipated service life, importance, and the seismic exposure of the bridge to determine a seismic retrofit category (SRC). The SRC is then used to determine seismic evaluation methods and retrofit measures. There are four SRCs, A through D. Seismic retrofit category A is the lowest category; bridges in this category do not require retrofits or further seismic evaluation. Seismic retrofit category D is the highest category; bridges in this category requiring the most rigorous seismic evaluations and retrofits.

SCREENING RESULTS

The SRC for the bridge is "**C**" for lower level earthquake ground motion and "**B**" for upper level earthquake ground motion.

RETROFITS REQUIRED

Seat width improvements are required at piers. Additional retrofits may be required if further seismic evaluation is needed.

RECOMMENDATIONS FOR FURTHER SEISMIC EVALUATION

For the lower level earthquake ground motion, it is recommended that capacity/demand ratios for bridge components are calculated as per Section 5.4 of the referenced manual. For the upper level earthquake ground motion, it is recommended that the capacities of the bearings are checked as per Section 5.2 of the referenced manual.

Retrofit cost estimates will be provided after any further required seismic evaluations are completed.

PARSONS

100 Broadway
New York, NY 10005
Phone: 212-266-8300
Fax: 212-571-6825
www.parsons.com

TECHNICAL MEMORANDUM

FROM: Kian Siang Chau, P.E
NYSPE 082744

DATE: JULY 1, 2014

RE: FATIGUE EVALUATION
NEW YORK STATE DEPARTMENT OF TRANSPORTATION
D031085; PIN 3501.60; I-81

BIN: 1093572 (I-481 Northbound / CSX Trans / Amtrak)

This memorandum documents a fatigue evaluation conducted for the existing Interstate 81 Viaduct Project. Existing structures with AASHTO Category D, E, and E' fatigue-prone details require 100% hands-on inspection unless proven to be exempt. The purpose of the evaluation is to assess the remaining life of fatigue-prone components.

EVALUATION PROCEDURES

The fatigue evaluation was performed in accordance with the AASHTO Guide Specification for Fatigue Evaluations of Existing Steel Bridges, 1990. Fatigue-prone welds identified in the biennial inspection reports were located on record drawings and confirmed visually in the field. Additional information concerning fatigue-prone welds located in BIN folders was also obtained and reviewed prior to inspection.

EVALUATION RESULTS

The results of the fatigue evaluation of the existing bridge are shown below.

Fatigue Detail Location	Remaining Safe Fatigue Life (Years)
Interior Girders, End of Bottom Flange Cover Plate	Infinite
Exterior Girders, End of Bottom Flange Cover Plate	Infinite

BRIDGE DECK EVALUATION REPORT

RECOMMENDATIONS

The bridge deck inspection findings and evaluation are used as a tool for developing the scope of work and cost estimates for the development and comparison of alternatives for the overall project.

The total damaged surface area of the deck for the bridge averages 8.6% and varies by span ranging between 0.1% and 21.0% of the deck surface area. The cores indicate the reinforcement steel is 3.25 inches to 4.5 inches below the surface of the deck. Additionally, the cores indicate the reinforcement steel is epoxy coated. The core lab tests indicate that chloride ion concentrations at the deck surface are nearly two times higher than the corrosion threshold for steel; however, they decrease rapidly to well below threshold at a depth of 3 inches below the surface.

Due to the age, condition and high chloride ion content of the bridge deck concrete, the bridge deck should be rehabilitated or replaced to meet the current standards and to mitigate excessive future maintenance costs.

ALTERNATIVES

- Rehabilitation Alternative - 2 inch Bonded Concrete Overlay
    - The removal of the top 2 inches of the existing deck will remove a portion of the deck with high chloride ion concentrations. It can be anticipated that chloride ions will continue to migrate into the remaining deck to the reinforcing steel resulting in further corrosion-related deterioration of the deck surface. This alternative will result in an estimated extended useful life expectancy of 20 years.

  The design life of the project is 30 years (ETC + 30). This alternative does not meet the project objectives of obtaining 30 years of service life and is not evaluated further.

- Rehabilitation Alternative - 3 inch Bonded Concrete Overlay
    - Scope

      The scope of this alternative is similar to the 2 inch Bonded Concrete Overlay except the top 3.25 inches of the entire deck will be removed and will include the complete removal of the bridge railings, curbs, parapets, and fascias to the level of the original top of the deck. This additional depth of concrete removal would bring the chloride concentrations

of the remaining deck to well below the corrosion threshold for steel. Areas of deteriorated concrete will be removed to at least 1 inch below the level of the reinforcement steel and to the horizontal and vertical limit of any detectable hollow areas. Additionally, a +/- 3 feet long portion of the concrete deck ends near the joints will be removed due to leakage and corrosion. Any corrosion of the reinforcement steel will be removed by sandblasting or hydro-blasting. The proposed deck overlay will be a nominal 3 inches thick bonded concrete, yielding a 9.5 inch standard thickness deck. A new single-sloped concrete barrier and new armored and armorless joint systems will be installed as appropriate. The Level 1 Load Rating for the final condition was found to be acceptable.

- Useful Life Expectancy

  A concrete overlay will not completely prevent chlorides from penetrating through the overlay and into the structural deck, however, concrete admixtures will be included in the bonded concrete overlay to impede the penetration of chloride into the deck. This alternative will result in an estimated extended useful life expectancy of 30 years.

- Cost Estimate

  The estimated cost for this alternative is $6,983,000. The Engineer's Opinion of Probable Construction Cost worksheet is at the end of this section.

- Rehabilitation Alternative – 100% Deep Removal and Partial Deck Reconstruction
  - Scope

    The scope of this alternative will include the complete removal of the bridge railings, curbs, parapets, and fascias to the level of the original top of the deck. The lower portion of the fascia or deck soffit is in better condition and only partial removal of damaged areas is necessary. The joints will be removed. The scope of this alternative will include partial depth reconstruction with removal of the concrete to at least 1 inch below the top mat of the reinforcement steel. Additionally, any further areas of deteriorated concrete detected will require full depth removal. Any corrosion of the reinforcement steel will be removed by sandblasting or hydro-blasting. The proposed deck partial reconstruction will be a nominal 6 inch thick concrete deck, yielding a 9.5 inch standard thickness deck. A new single-sloped concrete barrier and a new armorless joint will be installed. The Level 1 Load Rating for the final condition was found to be acceptable.

  - Useful Life Expectancy

This alternative will provide an estimated extended useful life expectancy of 35 years.

- Cost Estimate

  The estimated cost for this alternative is $8,424,000. The Engineer's Opinion of Probable Construction Cost worksheet is at the end of this section.

- Replacement Alternative – Cast-In-Place Concrete
  - Scope

    This scope of this alternative will include the complete demolition of the existing bridge deck, railings, parapets, fascias and bridge joints. The bridge deck will be replaced with a new 9.5 inches standard thickness concrete deck. A new single-sloped concrete barrier and a new armored and armorless joints will be installed as appropriate. The Level 1 Load Rating for the final condition was found to be acceptable.
  - Useful Life Expectancy

    This alternative will provide an estimated extended useful life expectancy of 40+ years.
  - Cost Estimate

    The estimated cost for this alternative is $8,763,000. The Engineer's Opinion of Probable Construction Cost worksheet is at the end of this section.

- Replacement Alternative – Pre-cast Concrete Deck Panels
  - Scope

    The scope of this alternative is similar to the Cast-In-Place Concrete Deck Replacement Alternative except the deck structure will be precast panels. This alternative offers reduced construction time over conventional construction.
  - Useful Life Expectancy

    This alternative will provide an estimated extended useful life expectancy of 40+ years.
  - Cost Estimate

    The comparison of accelerated construction to conventional construction is beyond the current scope of this evaluation.

IN-DEPTH INSPECTION REPORT

D031085 P.I.N. 3501.60

ELEMENT SPECIFIC BRIDGE WORK

B.I.N. 3/3 1093671

TEAM LEADER George H Stam, P.E. 056216
NYSPE LICENSE #

ASSISTANT TEAM LEADER Timothy Olmstead

FEATURE CARRIED I-481 Southbound

FEATURE CROSSED Kirkville Road

DATE FIELD WORK BEGAN 1/7/14

DATE FIELD WORK COMPLETED 1/8/14

TABLE OF CONTENTS

- STRUCTURE IDENTIFICATION
- INTRODUCTION
- PROJECT LOCATION MAP
- IN-DEPTH CONDITION DOCUMENTATION
- PLANS & SKETCHES
- IN-DEPTH PHOTO DOCUMENTATION
- ASBESTOS SAMPLING SURVEY
- LATEST BIENNIAL INSPECTION REPORT

STRUCTURE IDENTIFICATION

a. Bridge Identification Number (BIN):	3/3 1093671
b. Reference Marker:	481I 3301 2078
c. Region:	NYSDOT Region 3
d. County:	Onondaga
e. Town:	Dewitt
f. Feature Carried:	I-481 Southbound
g. Feature Crossed:	Kirkville Rd.

INTRODUCTION

a. Bridge History

i. Year Built:	1972
ii. Bridge Type:	Single Span Steel, Multi-girder
iii. Span Length:	114 feet
iv. Out-to-Out Width:	54 feet
v. Structural Ratings and Rankings	
1. Federal Sufficiency:	93.9 (Oct. 2012)
2. Condition Rating:	4.656 (Oct. 2012)
3. General Recommendation:	5 (Oct. 2012)
vi. Live Load Posting (HS25):	No
vii. National Highway System (NHS):	Yes
viii. Previous work Done:	1987 – Replace wearing surface (asphalt concrete overlay) with concrete overlay 1992 – Clean and paint metal surfaces 1998 – Asbestos testing. 1999 – Waterproofing bridge deck and corrosion inhibitor. 2003 – Remove begin armor angle and replace with concrete header; - Replace end ACJ; and - Misc.repair of concrete at abutments. 2007 – Repair nonfunctioning bearings.
ix. Planned Future Work:	N/A

b. Highway Classification

i. Functional Classification: Urban Principle Arterial - Interstate

ii. Traffic Volumes

YEAR	PROJECTED AADT
2014	25226
2034	37485
2054	55700

iii. Plan for Maintenance and Protection of Traffic:
Maintenance and Protection of traffic will be achieved by staged construction.

PROJECT LOCATION MAP

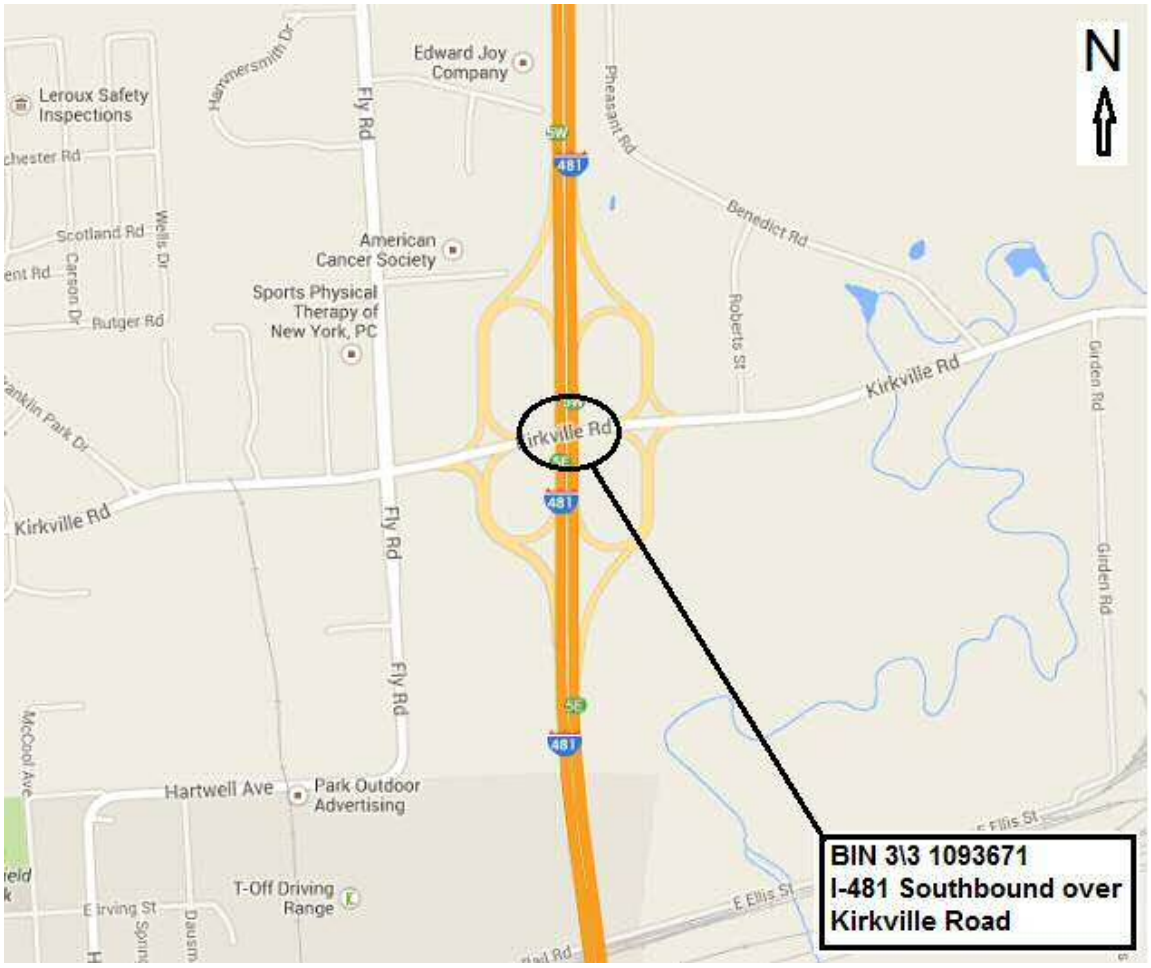

IN-DEPTH CONDITION DOCUMENTATION

NYS DEPT. OF TRANSPORTATION
BRIDGE INSPECTION REPORT **BIN:** 1093671 **SHEET:** 1 **OF** 5 **DATE:** 1/8/2014

FEATURE CARRIED: I-481 SB
FEATURE CROSSED: KIRKVILLE RD

TEAM LEADER: G. STAM
ASSIST. TEAM LEADER: T. OLMSTEAD

ITEM	REMARKS	PHOTO N0.
	BEGIN ABUTMENT ITEMS	
TP 349-22	Begin Abutment - Joint with Deck: The begin bearings are fixed. The steel armor was removed in 2003. There is no joint visible from the top (Photo 1). Under the deck, the pad at the top of the backwall has "walked" and is hanging down in bays 3, 4, & 5 (Photo 2). There is evidence of leakage down the backwall in bays 1, 5, & 6 (Photos 3 & 4)	1,2,3,4
TP 349-24	Begin Abutment – Bearings: The begin bearing are fixed. All of the bearings have pack rust between the rocker and the masonry plate that restricts movement. The fascia bearings G1 and G7 are the worst (Photos 5 & 6). The outboard anchor bolts of the fascia bearings are missing (Photos 5 & 6)	5,6
TP 349-26	Begin Abutment - Seat and Pedestals: The seat and pedestals are in good conditions with no hollow areas or significant cracks detected.	
TP 349-28	Begin Abutment – Backwall: At the left and right sides and in girder bays 1 and 6, there is tight map cracking with dampness and efflorescence staining from leakage down the backwall (Photos 3, 4, & 7). There is a full height hairline crack behind girder 4 (Photo 8).	3,4,7,8
TP 349-30	Begin Abutment – Stem: The stem has been recently repaired, cleaned and a surface sealant applied. No hollow areas or significant cracks were detected. (Photo 9). See Begin Abutment Deterioration Sketch.	9
TP 349-32	Begin Abutment – Erosion: The paving block slope protection at the right side is deteriorated with settled and deteriorated blocks over a 20 square foot area (Photo 10).	10
	END ABUTMENT ITEMS	
TP 349-23	End Abutment - Joint with Deck: The end joint is steel armored compression seal type and is in good condition (Photo 11). There is shallow ponding of water at the left and right curbs at the joint (Photo 12) indicating the seals remain water tight, although there is staining of the end abutment stem indicating the end joint may be leaking (Photo 13) . The concrete headers are in generally good condition with only minor spalling of the concrete along the steel armor angle and the end edge. The end side header at the end is cracked near centerline (Photo 11); and the begin side header at the end left safety walk is cracked along the steel angle (Photo 14).	11,12,13, 14
TP 349-25	End Abutment – Bearings: The end bearings are expansion. The fascia bearings are rusted and may have restricted movement (Photo 15). All of the bearings are slightly extended at 40 ºF with the end of the sole plate at the back edge of the masonry plate (Photo 16)	15,16

ITEM	REMARKS	PHOTO N0.
TP 349-27	End Abutment - Seats and Pedestals: The seats and pedestals are in good conditions with no hollow areas or significant cracks detected.	
TP 349-29	End Abutment – Backwall: There is a 2 square foot x up to 3 inches deep spalled area at the top of the end left backwall (Photo 17). In bay 3, there is a full height vertical hairline crack and a 3 square foot area of hollowness (Photo 18). See End Abutment Deterioration Sketch.	17,18
TP 349-31	End Abutment – Stem: The stem has been recently repaired, cleaned and a surface sealant applied. No hollow areas or significant cracks were detected. (Photo 13).	13
TP 349-33	End Abutment – Erosion: The paving block slope protection at the left side is deteriorated with settled and deteriorated blocks over a 30 square foot area (Photo 19).	19
	APPROACH ITEMS	
TP 349-53	Approach Drainage: At both approaches, the approach pavement at the curblines is slightly higher than the top of deck trapping runoff and causing shallow ponding along the shoulders at all four quadrants of the bridge (Photo 12 Typ).	12
TP 349-55	Approach Settlement: There is no significant settlement at the begin approach. At the end approach, there is +/- 0.5 inch of settlement in the travel lanes (Photo 11).	11
TP 349-57	Approach Pavement: At both approaches, the asphalt pavement adjacent to the bridge is transverse cracked and raveled with up to 4 inches wide x up to 2 inches deep potholes along the concrete headers. (Photos 1 & 11)	1,11
	DECK ITEMS	
TP 350-19	Deck - Wearing Surface: The ride quality of the deck is smooth.	
TP 350-20	Deck - Curbs: The curbs are granite in good condition. The reveal is 8.5 inches.	

ITEM	REMARKS	PHOTO N0.
TP 350-21	Deck - Sidewalks and Fascias: Sidewalks – • The left safety walk has light map cracking throughout (Photo 20). No hollow sounding areas were detected.	20
	• The right safety walk has map cracking throughout. There are several small spalls less than one inch deep with crumbly concrete surrounding the spalls (Photo 21). No hollow sounding areas were detected. The begin right safety walk has been repaired (Photo 22). Fascias –	21,22
	• Left - The upper (safety walk) portion of the left fascia is tight mapcracked throughout (Photo 23). The remainder of the left fascia has tight map cracking of the surface over 10% of the surface, primarily beneath the railing posts (Photo 23). The begin left fascia is spalled 8 inches high x 8 inches wide x up to 4 inches deep with exposed reinforcing (Photo 24).	23,24
	• Right - The upper (safety walk) portion of the right fascia is mapcracked with light efflorescence throughout (Photo 25). There is horizontal hairline cracking with efflorescence just beneath the upper portion of the fascia over estimated 20% of the fascia. The remainder of the right fascia has tight map cracking of the surface over 10% of the surface, primarily beneath the railing posts (Photo 25). The end right fascia is cracked and spalled with exposed reinforcing at the lower right corner (Photo 26).	25,26
TP 350-22	Deck - Railings: The railings are in good condition with only minor rust speckling of the galvanized surface. There is chain link snow fence attached to the left and right railings above Kirkville Road. At both sides, the bottom horizontal pipe ends and the bottom attachments to the vertical posts are heavily rusted (Photo 27) with several ends detached (Photo 28). The fence fabric is in good condition and securely attached to the top and bottom horizontal pipes and the vertical posts.	27,28
	<u>SUPERSTRUCTURE ITEMS</u>	
TP 350-27	Structual Deck: Record plans indicate the initial structural deck is 8 inches thick concrete mono deck. SIP forms were not used. Records indicate the deck received a 1.75 inch concrete overlay in 1987.	
	Top of Deck - There is scattered random cracking throughout (Photo 29 Typ) with scattered hollow areas as illustrated in the Top of Deck Deterioration Sketch. There are 3 patches in the top surface of the deck in the right lane (Photo 30 Typ); and a 4 inches long x 12 inches wide X 1 inch deep spall located in the center lane near mid-span (Photo 31) Total hollow area is <1%.	29,30,31
	Underdeck – The underside of the deck is hairline map cracked throughout (Photo 32). There are scattered more pronounced cracks, some with efflorescence; delaminations, hollow areas, and damp areas; and spalls, some with exposed rusted reinforcing bars. The deteriorated areas are illustrated on the Underside of Deck Deterioration Sketch; and significant areas noted below:	32
	• Bay 1 near diaphragm 5 – 15 square foot area of hollow sounding concrete and spalling up to 1.5 inches deep with exposed rusted reinforcing (Photo 33).	33
	• Bay 1 at end – 15 square foot area of map cracking, dampness, hollowness with efflorescence and staining. (Photo 34).	34

ITEM	REMARKS	PHOTO N0.
TP 350-27	• Bay 5 in diaphragm bay 2 – 25 square foot area of map cracking and 1/16 inch cracks with dampness and efflorescence (Photo 35).	35
	• Bay 6 at begin – 12 square foot area of map cracking, 1/16 inch cracks, dampness, efflorescence and staining (Photo 36).	36
	• Bay 6 in diaphragm bay 1 – 20 square foot area of map cracking, 1/16 inch cracks, efflorescence and staining (Photo 37).	37
	• Bay 6 at end – 15 square foot area of map cracking, 1/16 inch cracks, dampness, efflorescence and staining in a previously patched area (Photo 38).	38
	• End Right – The haunch above the backwall at the end left is spalled (Photo 39)	39
TP 350-28	Primary Members: Good condition; surface rusting where the paint has peeled or blistered. No significant section loss.	
TP 350-29	Secondary Members: Good condition; surface rusting where the paint has peeled or blistered. No significant section loss.	
TP 350-30	Paint: The paint system is failed on less than 5% of the surfaces of the girders and diaphragms (Photo 40). There is cracking and peeling of the paint on the bottom flanges (Photos 41 & 42). There is surface rusting where the paint has peeled or blistered. The outside webs of the fascia girders near the bearings have scattered blistering and peeling paint.	40,41,42
	UTILITIES ITEMS	
TP 350-43	Lighting: None.	
TP 350-44	Sign Structure: None.	
TP 350-45	Utilities and Support: None visible.	

ITEM	REMARKS	PHOTO N0.
	SPECIAL EMPHASIS ITEMS Special Emphasis Inspection Required · Non-Redundant/Fracture Critical Members – No · Pin and Hangers – No · Fatigue-Prone Welds – No · Non-Categorized Fatigue-Prone Details – No · Other – No Special Emphasis Details · No Special emphasis details.	

PLANS & SKETCHES

BIN 1093671 & 2

✓ Richard B. Engle 11-20-91 Pete Richlman
Date - 11-19-87
Team Leader

F.I.S.H. 70-7

FED. RD. REG. NO.	STATE	FEDERAL PROJECT NO.	SHEET NO.
1	NEW YORK	I-481-2(116)	229

INTERSTATE ROUTE CONNECTION 570
BUTTERNUT INTERCHANGE - COLLAMER
ONONDAGA COUNTY

BJO 88 P.J.R. 12/90 Update 11/12/92 TRK 11/01

ESTIMATE OF QUANTITIES

ITEM	DESCRIPTION	UNIT	BRIDGE NO. 3S NEAT	BRIDGE NO. 3S PROPL.		BRIDGE NO. 3 NEAT	BRIDGE NO. 3 PROPL.
2EF-6	Selected Granular Fill	C.Y.	7832	7835		7832	7835
21IF	Underdrain Filter	C.Y.	17	20		17	20
5B	Structure Excavation	C.Y.	488	490		540	540
11HG	Perforated Corr. Metal Underdrain 6"ϕ 18ga.	L.F.	292	295		288	290
18	Class A - Concrete for Structures	C.Y.	19	20		19	20
18MA	Class A - Concrete for Struct (Mono Bdg. St.)	S.F.	6309	6310		6309	6310
20	Class B - Concrete for Structures	C.Y.	1212	1215		1186	1190
24A	Bagged Screened Aggregate	C.Y.	160	160		160	160
28	Bar Reinforcement for Structures	Lb.	106939	106940		106252	106255
28B	Stud Shear Connectors	Ea.	2394	2400		2394	2400
29	Structural Steel	Lb.	250243	250245		250243	250245
37S(2)	Steel Bridge Railing (2 Rail)	L.F.	412	415		412	415
61	Bituminous Material	Gal.	252	255		246	250
79B	Concrete Block Paving	S.Y.	117	120		117	120
845B	Steel Bearing Test Piles	L.F.	90	90		90	90
85	Steel Bearing Piles	L.F.	5320	5320		5240	5240
85A	Splices for Steel Bearing Piles	Ea.	44	45		44	45
87	Furnishing Equip. for Driving Piles	L.S.	Nec.	Nec.		Nec.	Nec.
94SBV	Stone Curb (Bridge Types) Granite	L.F.	590	590		585	585
124	Sodding	S.Y.	119	120		119	120
363I	Epoxy Protective Coating for Conc.	S.F.	900	900		900	900
1WPS	Watering Plants and Sod	MGal.	2.4	4.0		2.4	4.0

✓ Douglas E. Hilbert 11/26/90

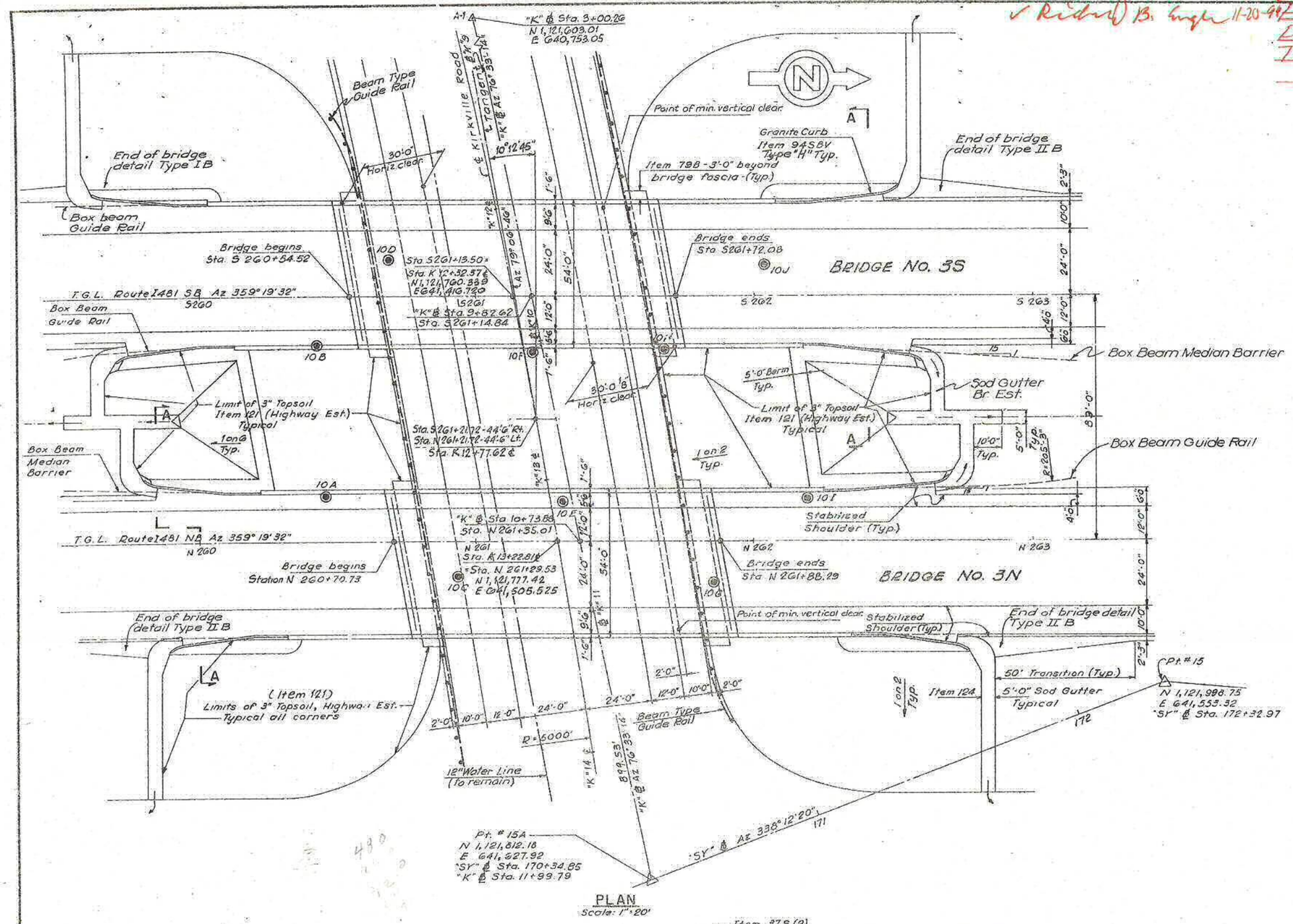

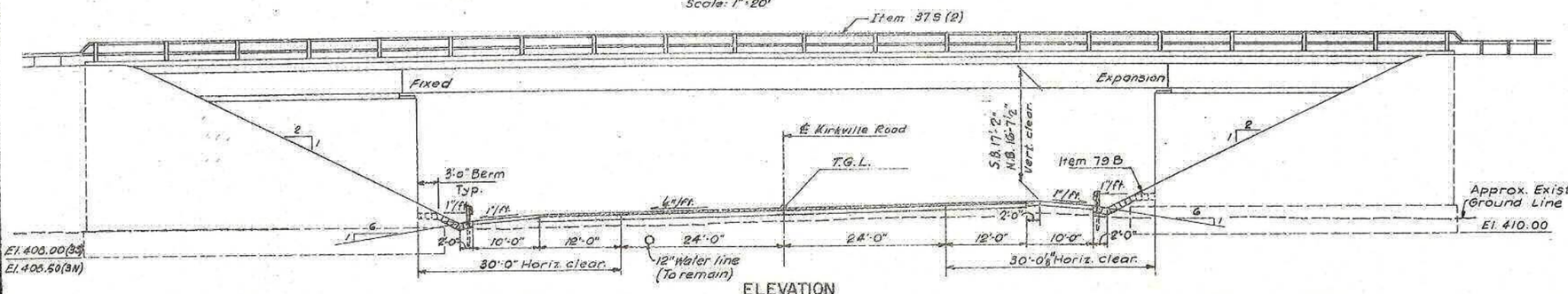

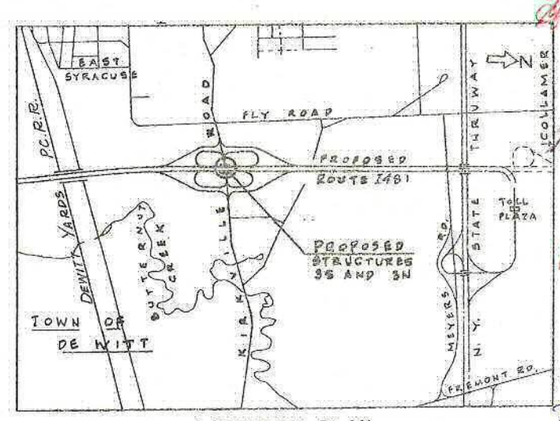

LOCATION PLAN
Scale 1" = 2000'

Bridge Open to Traffic 10/4/93 Bridge Open to Traffic 11/3/93 10/4 10/

NOTES:
1. For General Notes see Sheet No. 124
2. For foundation treatment see Sheet No. 231
3. For Curbing and Drainage Details at end of bridges see Sheet No. 127 & 128
4. ◉ Indicates location of borings.
5. For Section A-A see Sheet No. 230
6. The structural slab on this structure shall be formed with removable forms

1 09367 1 A 2

F.A.I. 481

BRIDGE NO. 3S & 3N
RTE I481 OVER KIRKVILLE ROAD
GENERAL PLAN - SHEET NO. 1

DRAWING NO.	SCALE	DATE	SHEET
9093-03	As Shown	8/5/70	22

LOCKWOOD, KESSLER & BARTLETT, INC
CONSULTING ENGINEERS - SYOSSET, NEW YORK

1093671

F.I.S.H. 70-7

FED. RD. REG. NO.	STATE	FEDERAL PROJECT NO. AID	SHEET NO.
I	NEW YORK	I-481-2(116)	232

INTERSTATE ROUTE CONNECTION 570

BUTTERNUT INTERCHANGE - COLLAMER
ONONDAGA COUNTY

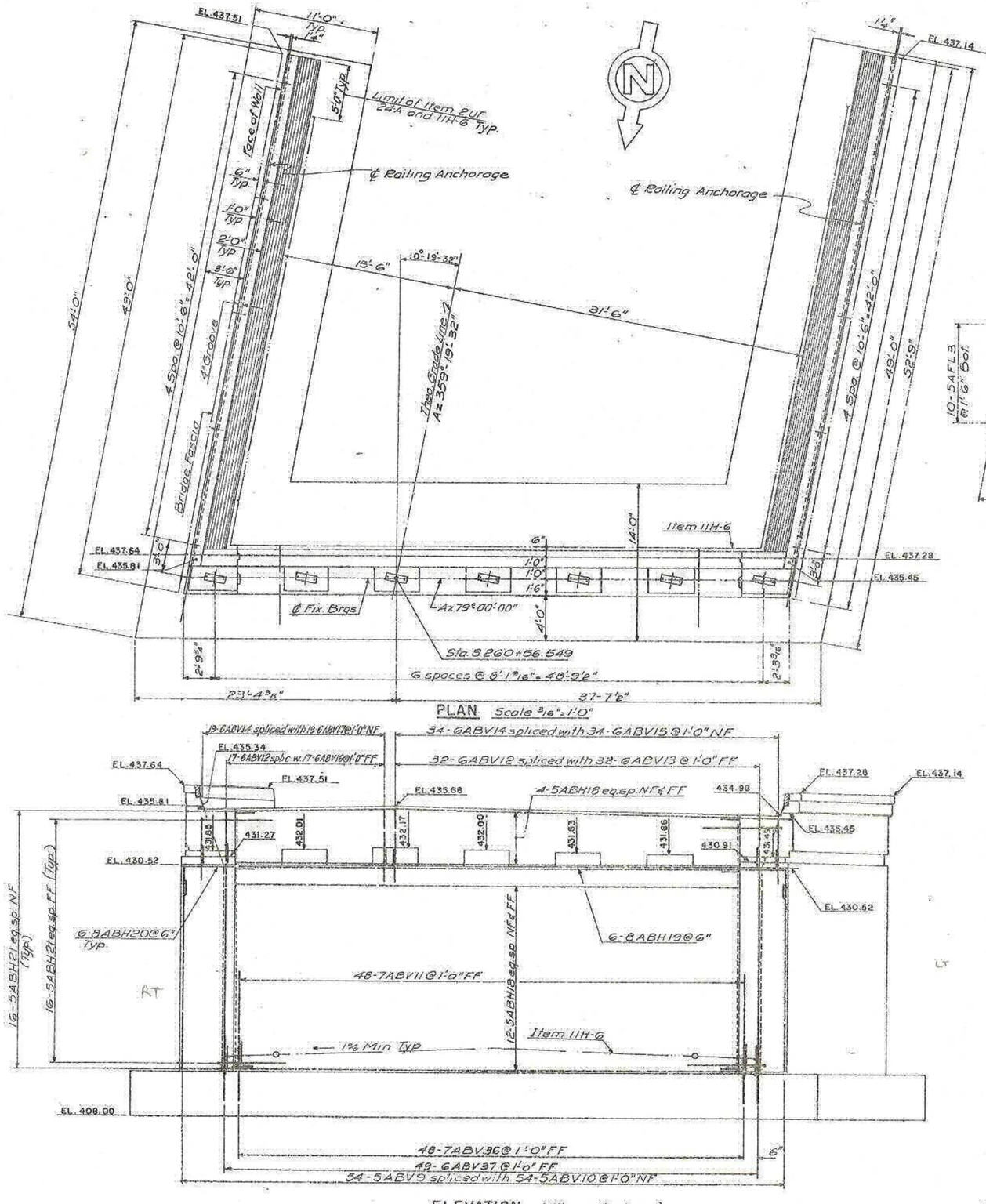

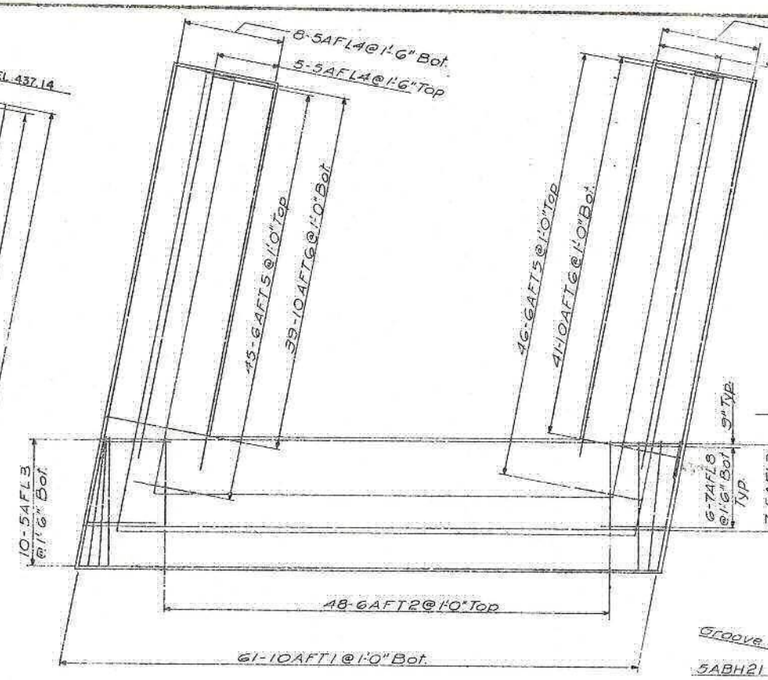

FOOTING REINFORCEMENT
Scale 3/8" = 1'-0"

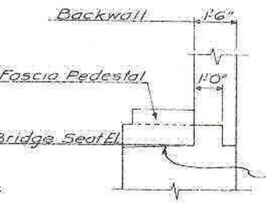

SECTION A-A
Scale 3/8" = 1'-0"

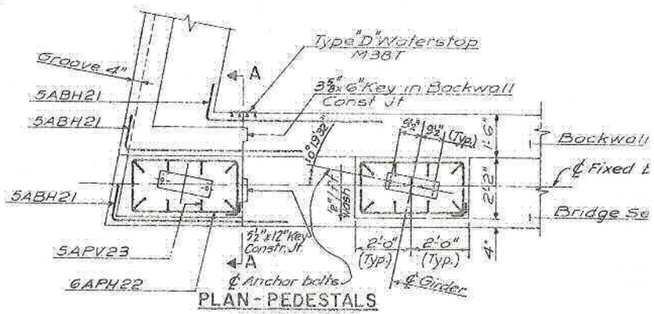

PLAN - PEDESTALS
Scale 3/8" = 1'-0"

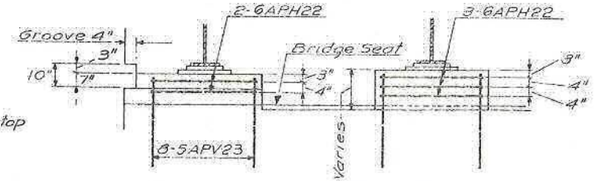

ELEVATION - PEDESTALS
Scale 3/8" = 1'-0"

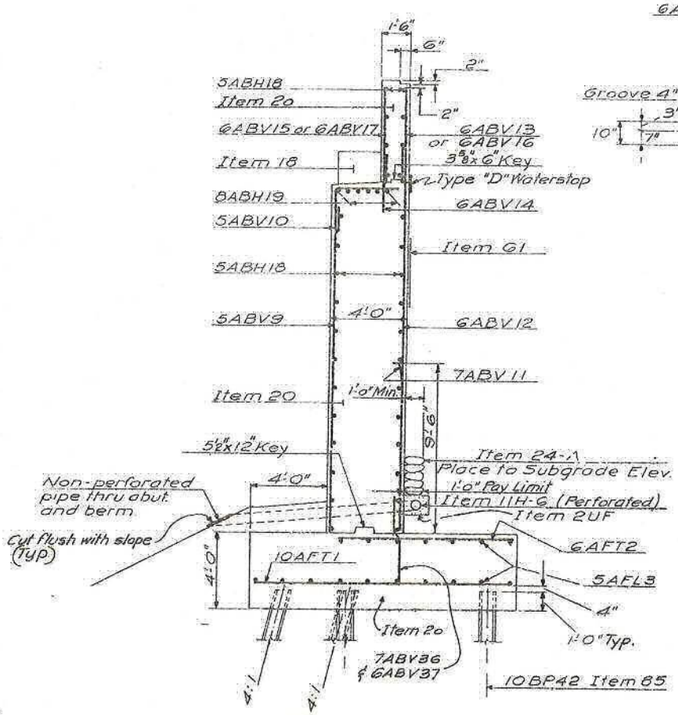

TYPICAL SECTION

For Notes see Sheet No. 234

F.A.I. 481

BRIDGE No. 3 S

RTE 481 OVER KIRKVILLE ROAD - SOUTHBOUND

SOUTH ABUTMENT

DRAWING NO.	SCALE	DATE	SHEET NO.
9093-03	As shown	8/5/70	232

FED. RD. REG. NO.	STATE	FEDERAL PROJECT AID NO.	SHEET NO.	TO SHT
1	NEW YORK	I-690-3(28) I-481-2(116)	233	30

INTERSTATE ROUTE CONNECTION 570

BUTTERNUT INTERCHANGE - COLLAMER
ONONDAGA COUNTY

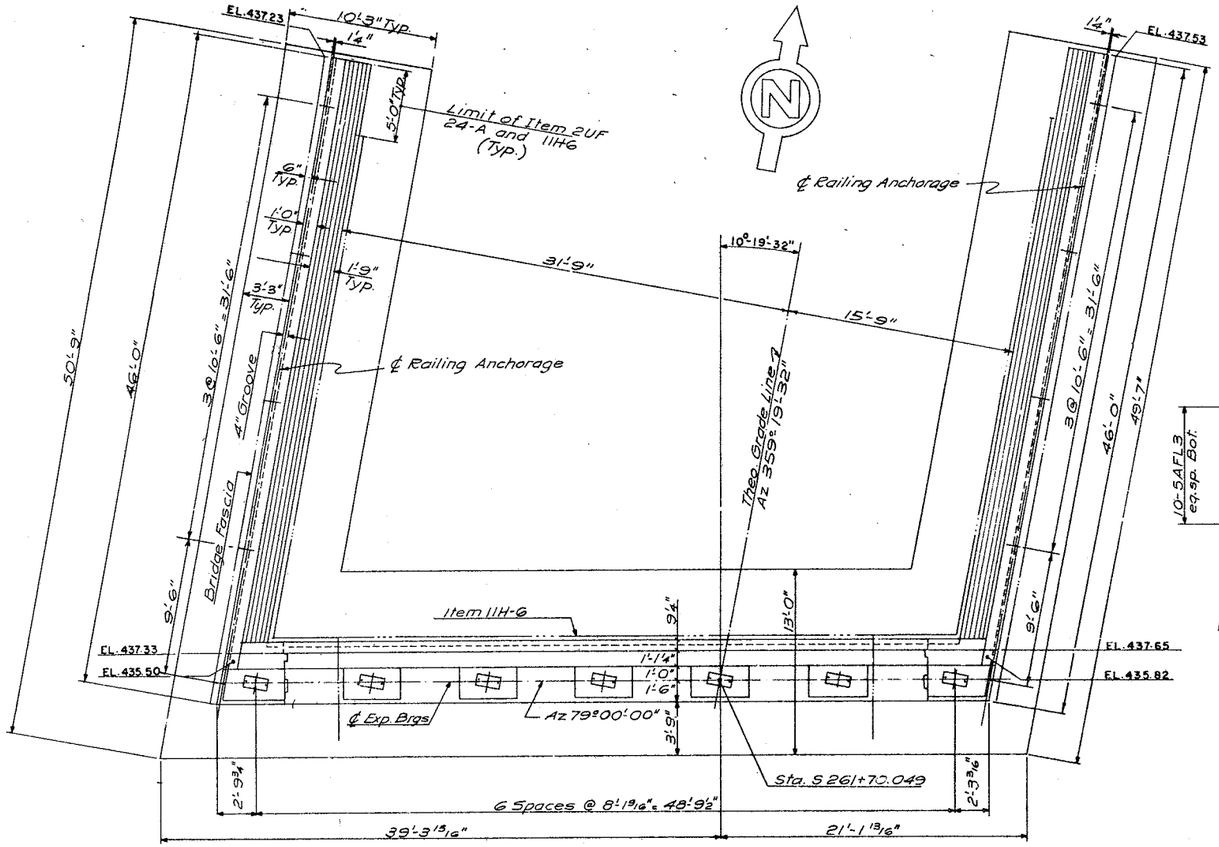

PLAN
Scale 3/16" = 1'-0"

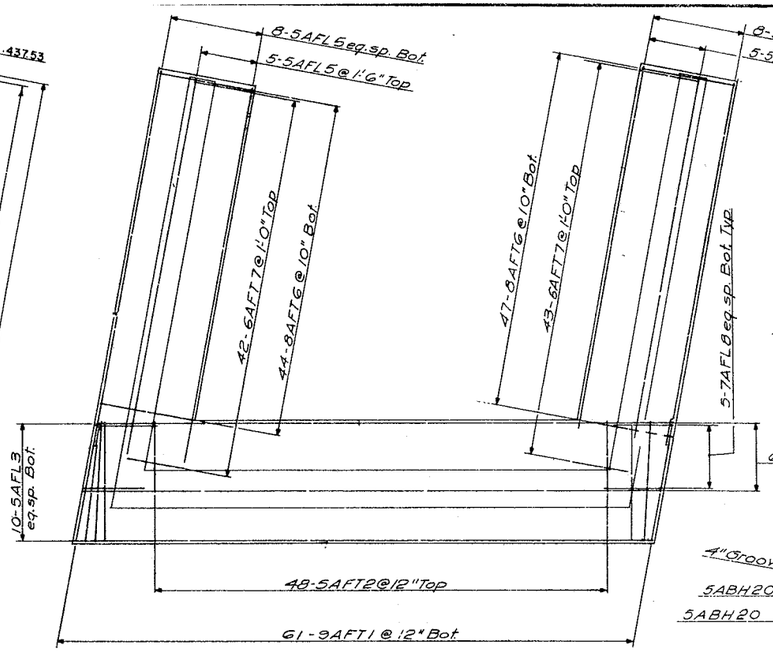

FOOTING REINFORCEMENT
Scale 1/8" = 1'-0"

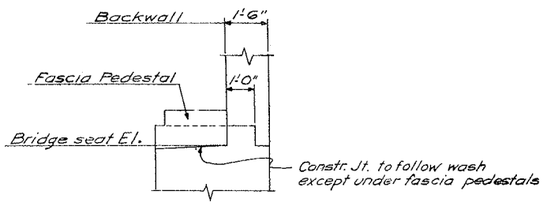

SECTION A-A
Scale 3/8" = 1'-0"

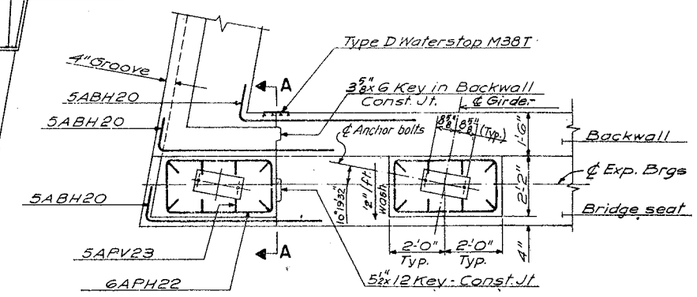

PLAN - PEDESTALS
Scale 3/8" = 1'-0"

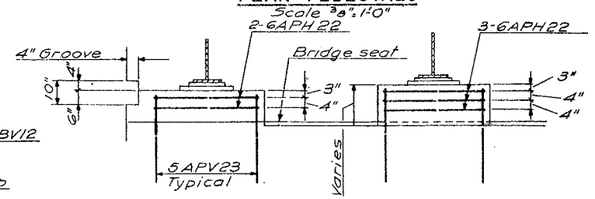

ELEVATION - PEDESTALS
Scale 3/8" = 1'-0"

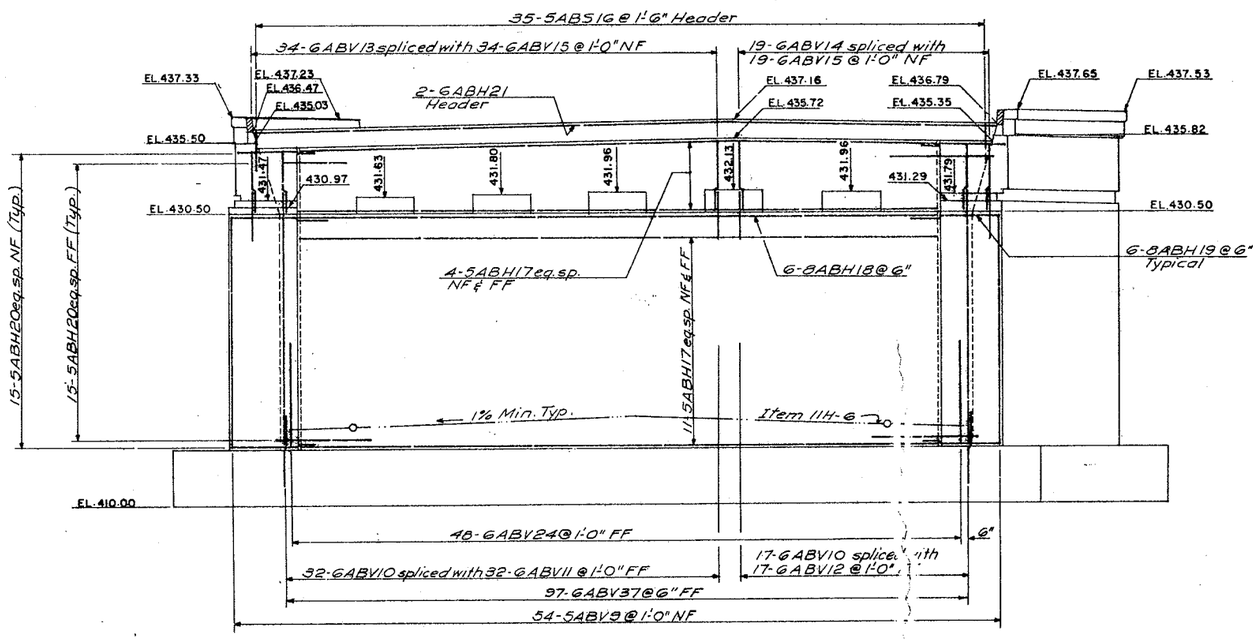

ELEVATION (Piles not shown)
Scale 3/16" = 1'-0"

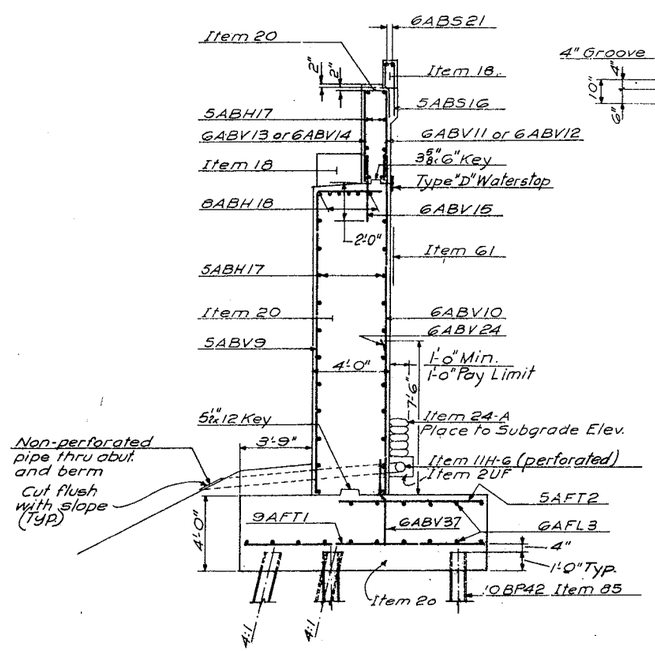

TYPICAL SECTION
Scale 1/4" = 1'-0"

For Notes see Sheet No. 235

F.A.I. 481

BRIDGE No. 35

RTE 481 OVER KIRKVILLE ROAD-SOUTHBOUND
NORTH ABUTMENT

DRAWING NO.	SCALE	DATE	SHEET NO
9093-03	As shown	8/5/70	233

LOCKWOOD, KESSLER & BARTLETT, INC.
CONSULTING ENGINEERS — SYOSSET, NEW YORK

F.I.S.H. 70-7

FED. RD. REG. NO.	STATE	FEDERAL PROJECT AID NO.	SHEET NO.	TOTAL SHEET
1	NEW YORK	I-690-3(29) I-481-2(116)	236	309

INTERSTATE ROUTE CONNECTION 570

BUTTERNUT INTERCHANGE - COLLAMER

ONONDAGA COUNTY

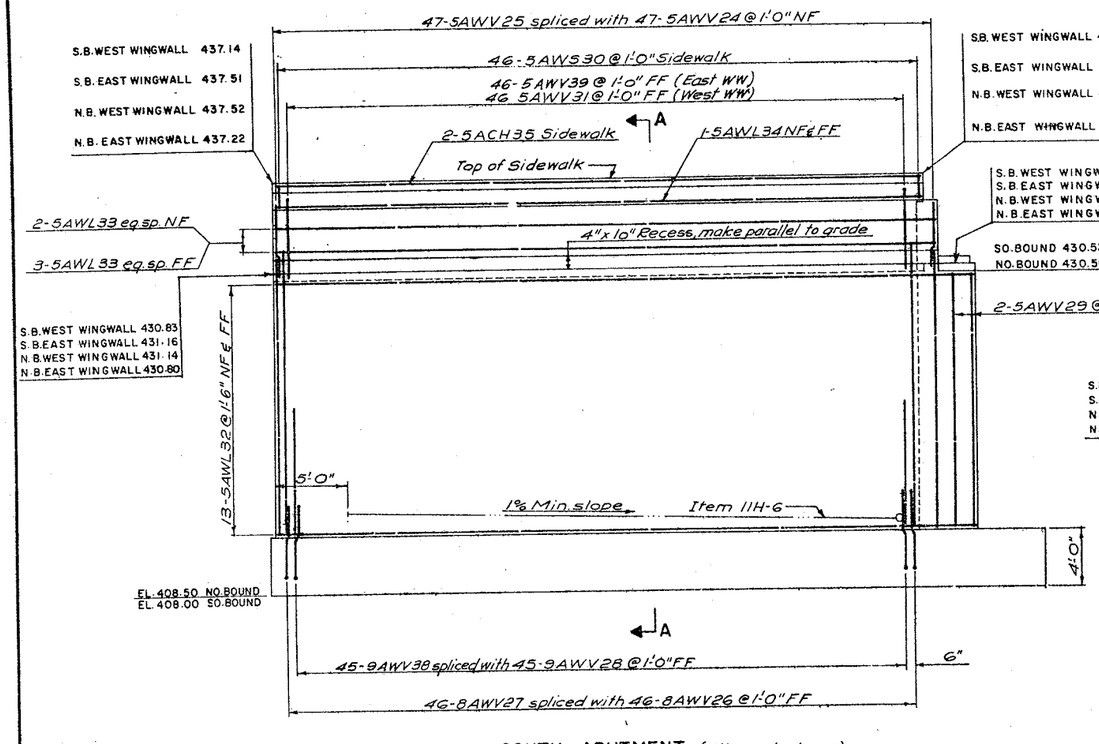

SOUTH ABUTMENT (Piles not shown)

(NB EAST WINGWALL SHOWN)

Scale 3/16" = 1'-0"

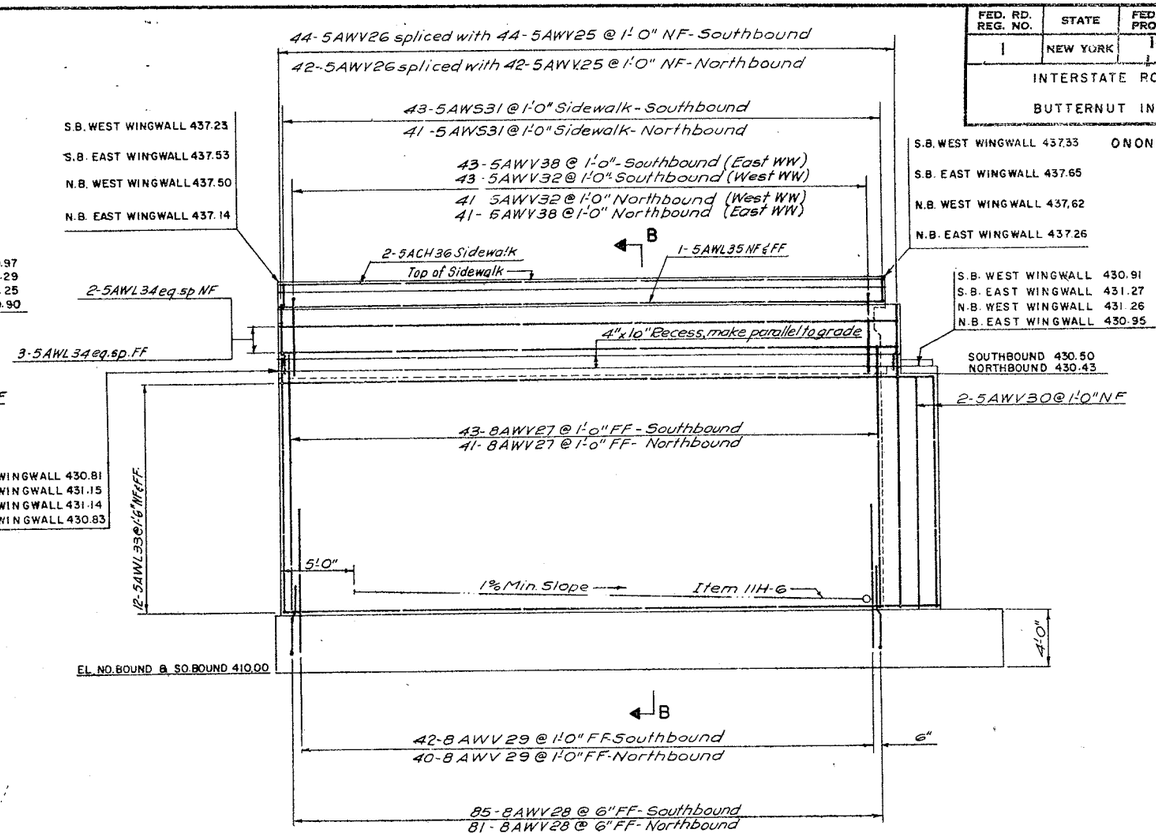

NORTH ABUTMENT (Piles not shown)

(SB WEST WINGWALL SHOWN)

Scale 3/16" = 1'-0"

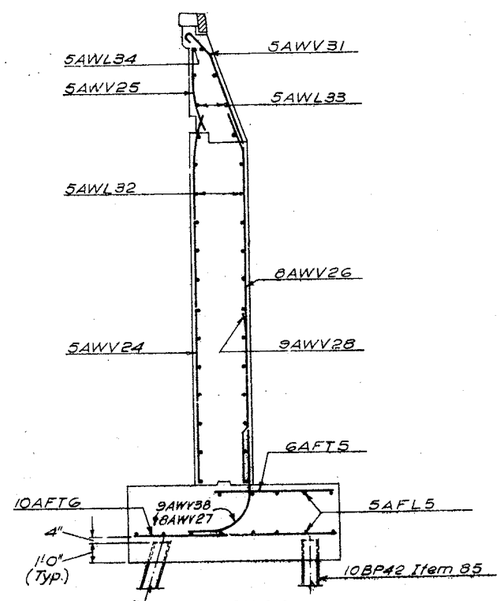

SECTION A-A

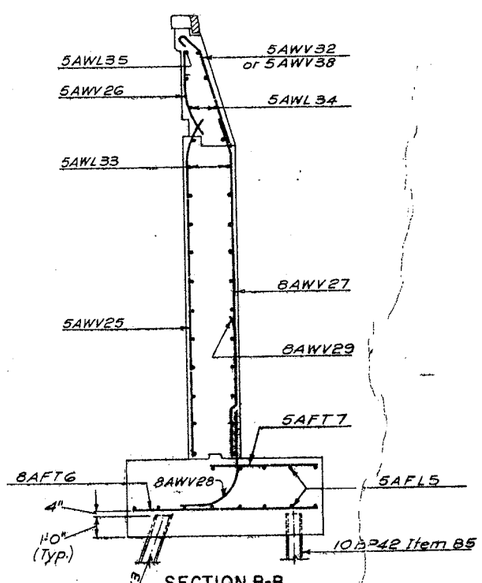

SECTION B-B

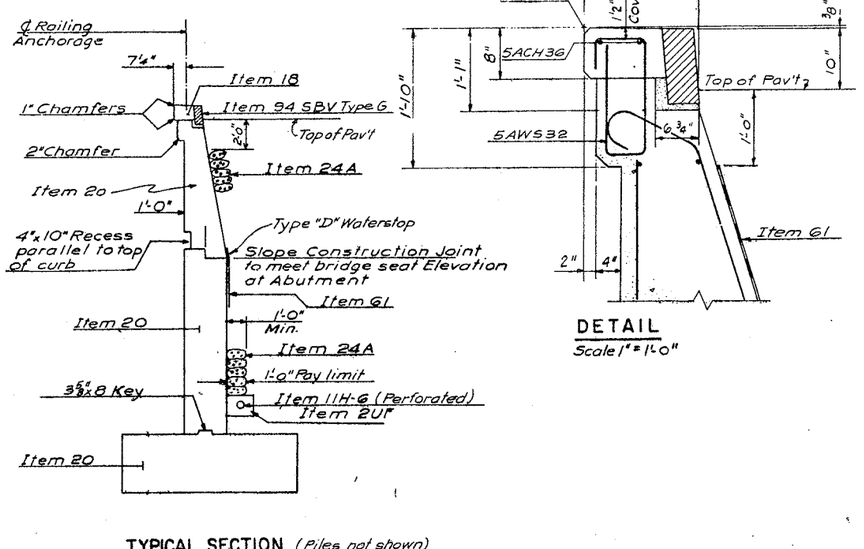

TYPICAL SECTION (Piles not shown)

DETAIL

Scale 1" = 1'-0"

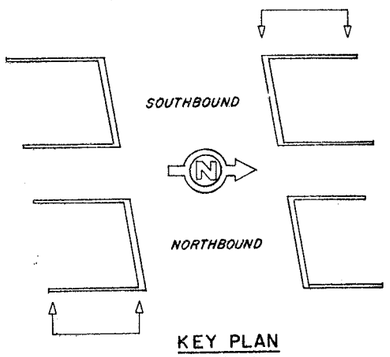

KEY PLAN

No Scale

F.A.I. 481

BRIDGE No. 3

RTE 481 OVER KIRKVILLE ROAD - NB & SB WINGWALLS

DRAWING NO.	SCALE	DATE	SHEET NO.
9093-03	As shown	8/15/70	236

LOCKWOOD, KESSLER & BARTLETT, INC.
CONSULTING ENGINEERS - SYOSSET, NEW YORK

10936.71

F.I.S.H. 70-7

FED. RD. REG. NO.	STATE	FEDERAL PROJECT	AID NO.	SHEET NO.	TOTAL SHEETS
1	NEW YORK	I-690-3(20) I-481-2(11)P2		237	309

INTERSTATE ROUTE CONNECTION 570

BUTTERNUT INTERCHANGE - COLLAMER

ONONDAGA COUNTY

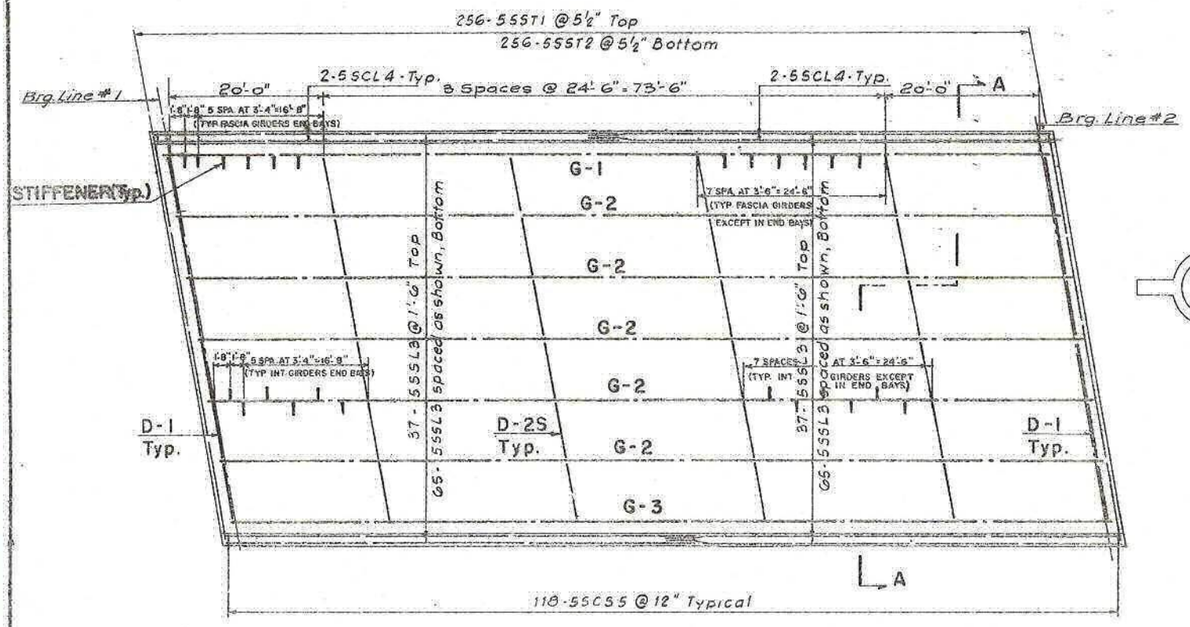

PLAN (SB)

Scale 1" = 10'

(NB PLAN SIMILAR)

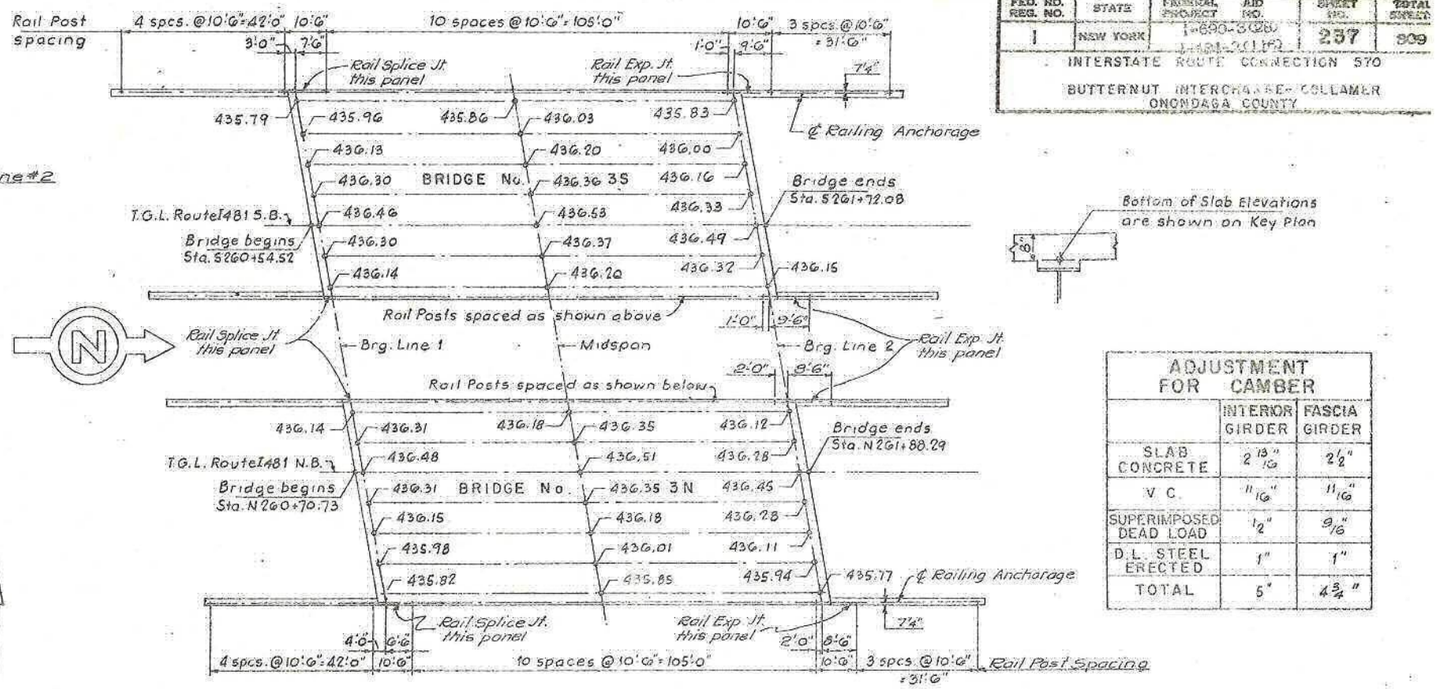

KEY PLAN

Scale 1" = 20'

Bottom of Slab Elevations are shown on Key Plan

ADJUSTMENT FOR CAMBER	INTERIOR GIRDER	FASCIA GIRDER
SLAB CONCRETE	2 13/16"	2½"
V.C.	11/16"	11/16"
SUPERIMPOSED DEAD LOAD	½"	9/16"
D.L. STEEL ERECTED	1"	1"
TOTAL	5"	4 3/4"

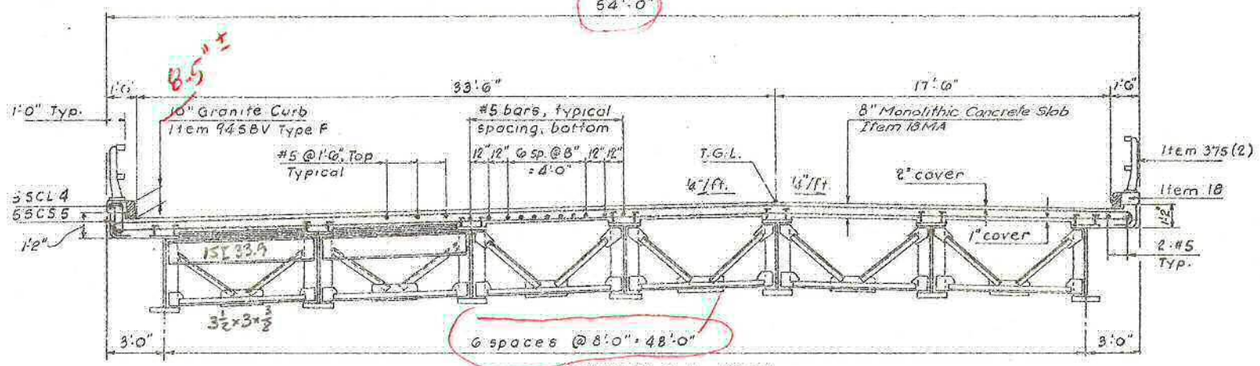

SECTION A-A (SB)

Scale ¼" = 1'-0"

(NB OPPOSITE HAND)

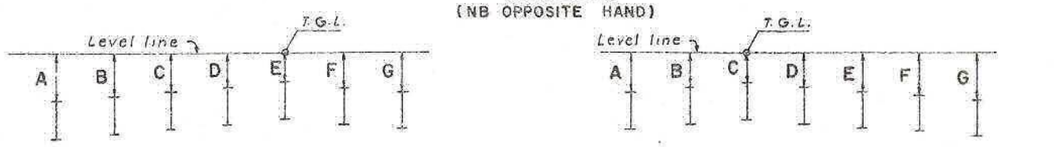

BRIDGE No. 3-S

BRIDGE No. 3-N

VERTICAL MEASUREMENTS TO TOP OF STEEL

	A	B	C	D	E	F	G
BRG. LINE No. 1	1'-3 3/16"	1'-5 3/16"	1'-3⅜"	1'-1⅝"	11/16"	1'-1"	1'-3"
BRG. LINE No. 2	1'-6 15/16"	1'-5"	1'-3"	1'-1 11/16"	11/16"	1'-1⅛"	1'-3⅜"

	A	B	C	D	E	F	G
BRG. LINE No. 1	1'-3⅜"	1'-1⅛"	11/16"	1'-1 11/16"	1'-3"	1'-5"	1'-6 15/16"
BRG. LINE No. 2	1'-5"	1'-1"	11/16"	1'-1⅛"	1'-3⅜"	1'-5 3/16"	1'-7 3/16"

Diaphragm Conn. ℄ to be 7"×⅞" ℄ (Typ.)

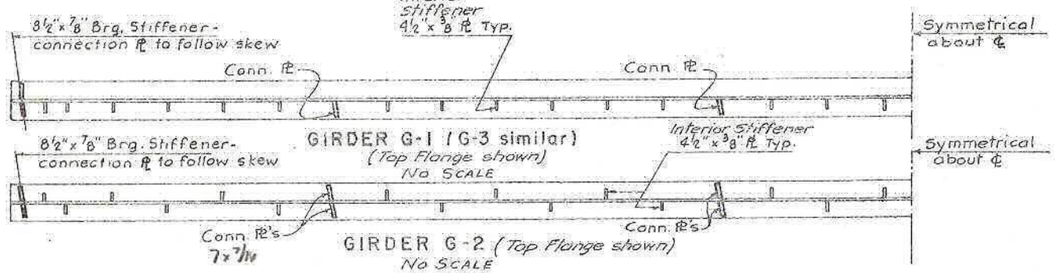

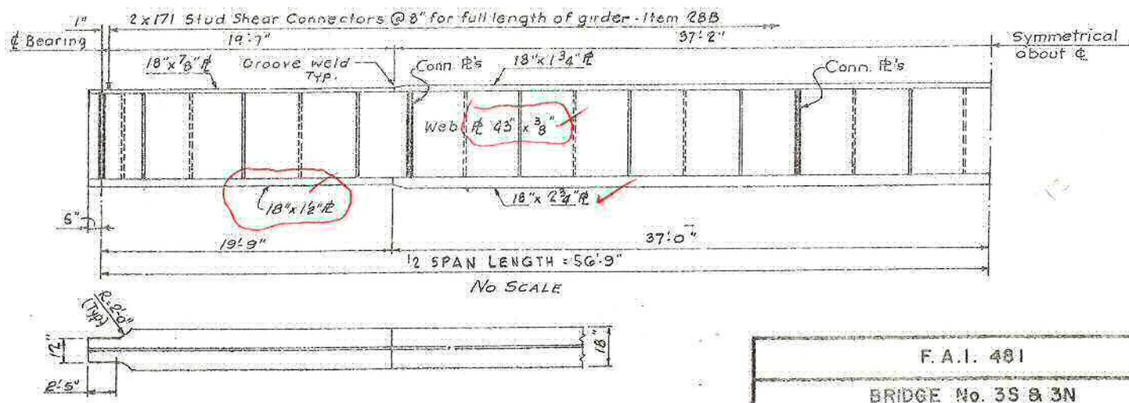

PLAN - BOTTOM FLANGE

No Scale

NOTES

1. For Diaphragm Details, Connection Plates, and weld sizes, see Sheet No. 129
2. For Fabrication Notes see Sheet No. 129
3. For Curb Details, see Sheet No. 125

F.A.I. 481

BRIDGE No. 3S & 3N

RTE 481 OVER KIRKVILLE ROAD - NB & SB

SUPERSTRUCTURE

DRAWING NO.	SCALE	DATE	SHEET NO.
9093-03	As shown	8/15/10	237

LOCKWOOD, KESSLER & BARTLETT, INC.

3/3 1093671

D259214

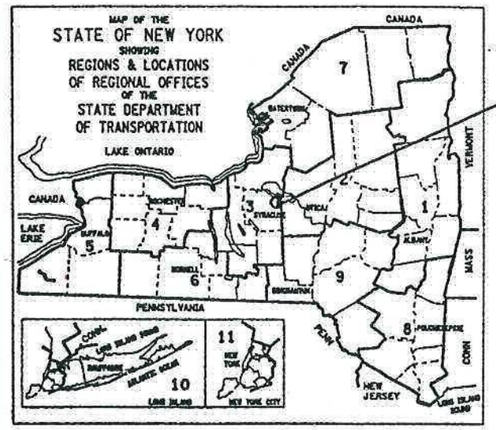

PROJECT LOCATION

THIS IS A BRIDGE REHABILITATION PROJECT ON VARIOUS BRIDGES ON INTERSTATE 481, LOCATED IN THE TOWNS OF CICERO AND DEWITT IN ONONDAGA COUNTY. THIS WORK CONSISTS OF BRIDGE JOINTS, BEARINGS, BRIDGE RAIL AND CONCRETE REPAIR OF SUBSTRUCTURES. THERE ARE 28 BRIDGES IN THE PROJECT BEGINNING AT REFERENCE MARKER 481I-3301-1000 SOUTH OF THE CITY OF SYRACUSE AND ENDING AT REFERENCE MARKER 481I-3301-2143. I481 INTERCHANGE NORTH OF THE CITY.

STATE OF NEW YORK
DEPARTMENT OF TRANSPORTATION
OFFICE OF ENGINEERING

BRIDGE REHABILITATION PROJECT (ELEMENT SPECIFIC)
VARIOUS BRIDGES ON INTERSTATE 481
TOWNS OF DEWITT AND CICERO

VOLUME 1 OF 2

432 SHEETS ONONDAGA COUNTY CONTRACT D259214

F.A. PROJECT

STANDARD SHEETS

M203-4, M203-5, M203-6R1, M603-1
M606-32, M606-33, M606-34,
M619-3R1, M619-4, M619-5
M685-1, M685-2R1, M685-3R1
M685-4R1, M685-5R1, M403-1, M203-4,
M203-5, M203-6R1, M603-1

PTR 10/12/05
10/29/2008
PTR 10/3/12
DOT 10/10/12

ALL WORK CONTEMPLATED UNDER THIS CONTRACT IS TO BE COVERED BY AND IN CONFORMITY WITH THE STANDARD SPECIFICATIONS (METRIC UNITS) OF JANUARY 2, 2002, AS AMENDED BY ADDENDA NOS. 1 AND 2, EXCEPT AS MODIFIED ON THESE PLANS AND IN THE ITEMIZED PROPOSAL.

CONTRACTOR'S NAME_____
AWARD DATE_____
COMPLETION DATE_____
FINAL ACCEPTANCE DATE_____
REGIONAL DIRECTOR_____
ENGINEER IN CHARGE_____
FINAL COST TOTAL_____

FISCAL SHARE	COST(S)

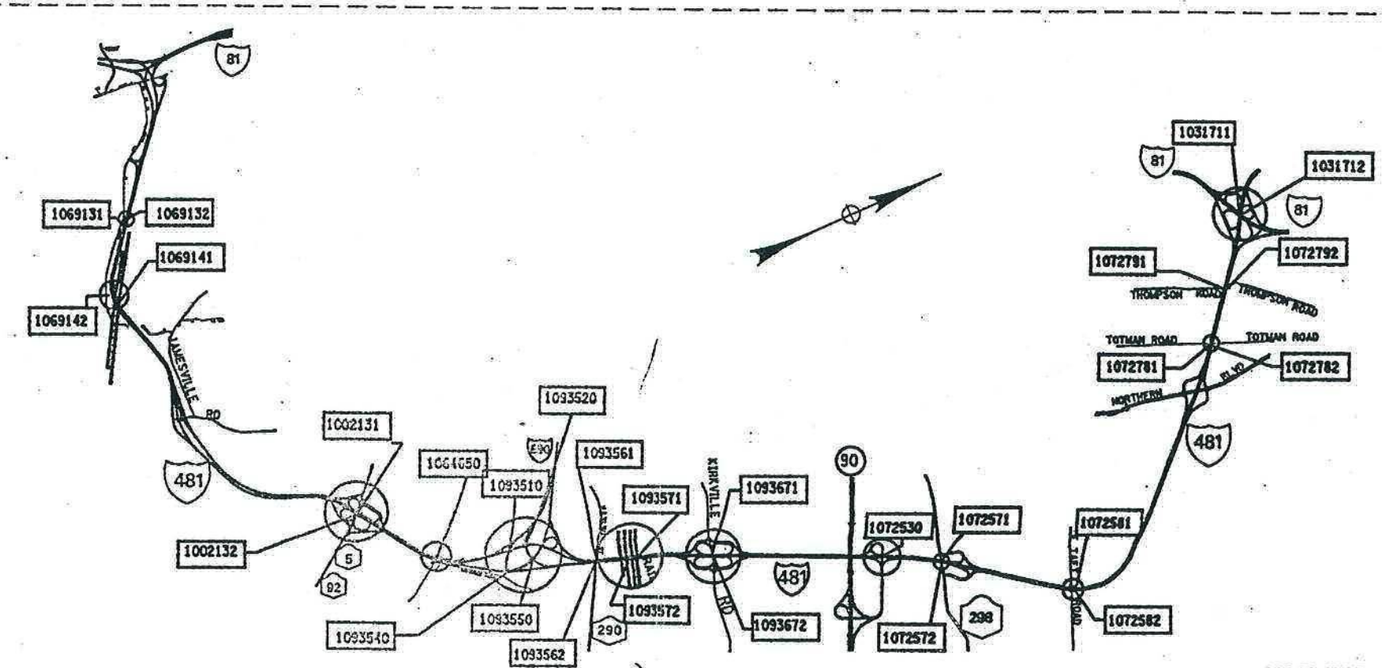

NOT TO SCALE

PROJECT LOCATION

BRIDGE REHAB. PROJ.- ELEMENT SPECIFIC
VARIOUS BRIDGES ON INTERSTATE 481
TOWNS OF DEWITT AND CICERO
ONONDAGA COUNTY

FED. ROAD REG. NO.	STATE	SHEET NO.	TOTAL SHEETS
1	N.Y.	1	432

FEDERAL AID PROJECT NO.
CAPITAL PROJECT IDENTIFICATION NO. 3056.13

INDEX ON SHEET NO. 5 & 6

RECOMMENDED BY John E. Fritze 9/04/02
REGIONAL DESIGN ENGINEER DATE

RECOMMENDED BY Myron A. Dunby 9/4/02
REGIONAL CONSTRUCTION ENGINEER DATE

RECOMMENDED BY 9/04/02
REGIONAL TRANSPORTATION MAINTENANCE ENGINEER DATE

RECOMMENDED BY 9-4-02
REGIONAL TRAFFIC ENGINEER DATE

APPROVED BY 09-04-02
REGIONAL DIRECTOR DATE

DESIGN SUPERVISOR Edward Clement II JOB MANAGER Nick DeCicco DESIGNED BY M. Mahaney CHECKED BY Chris Spicer DRAFTED BY Kasey Hay ESTIMATED BY Chris Fuge CHECKED BY Chris Fuge

FED ROAD REG. NO.	STATE	CONTRACT NO.	SHEET NO.	TOTAL SHEETS
1	N.Y.	D259214	333	432

BRIDGE REHABILITATION PROJECT (ELEMENT SPECIFIC)
VARIOUS BRIDGES ON INTERSTATE 481
TOWNS OF DEWITT AND CICERO
ONONDAGA COUNTY
P.I.N. 305613 | B.I.N. 1093671 & 1093672

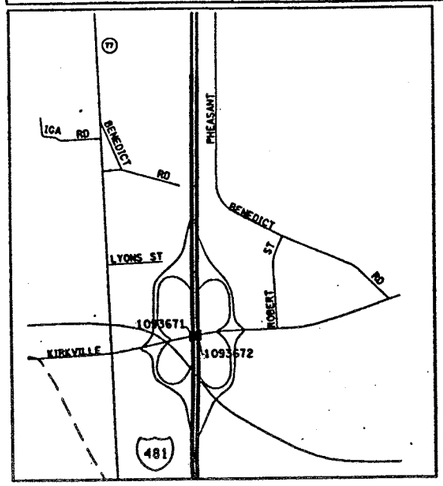

LOCATION MAP
QUADRANGLE
SCALE: 1:24000

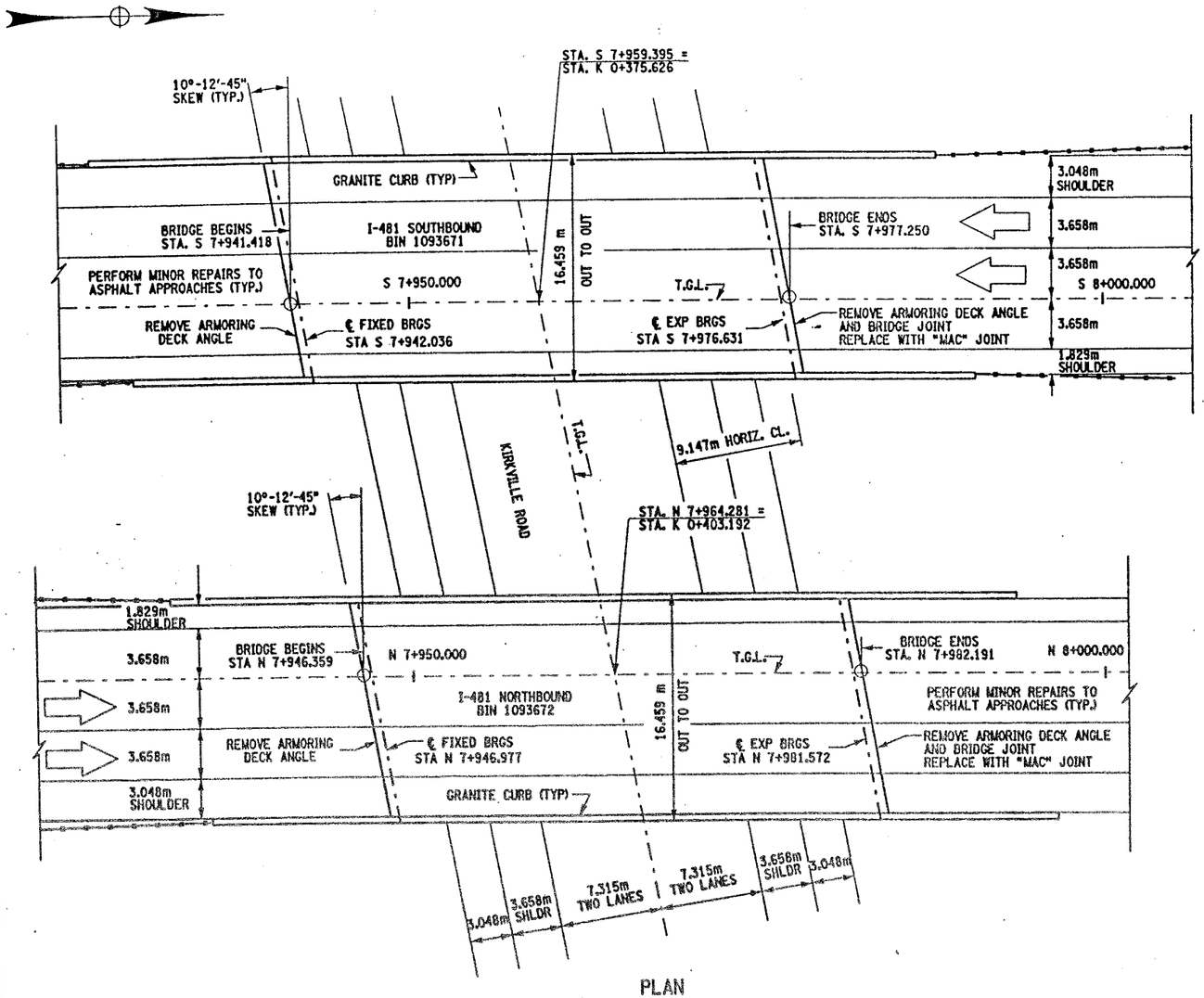

PLAN
SCALE: 1:200

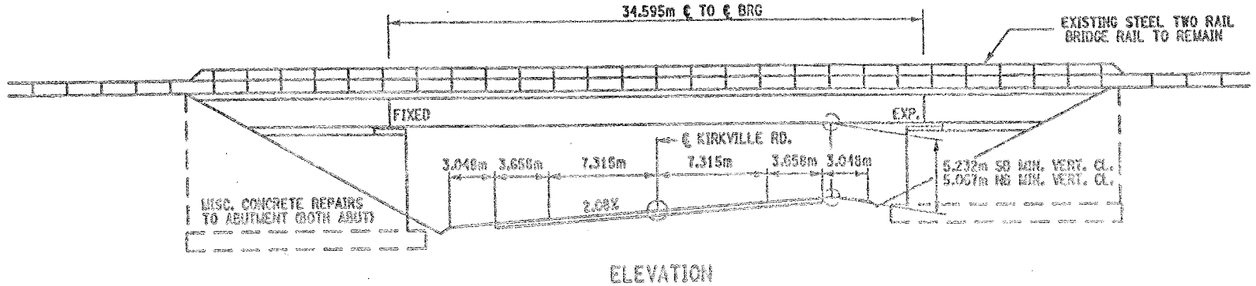

ELEVATION
SCALE: 1:200

WORK TO BE DONE ON BIN 1093671:

1. ESTABLISH MP&T SCHEME FOR STAGE CONSTRUCTION.
2. REMOVE EXISTING BRIDGE JOINT AND ARMOR DECK ANGLE AT END ABUTMENT, (NORTH).
3. REMOVE ARMORING DECK ANGLE AT BEGINNING ABUTMENT, (SOUTH).
4. PLACE NEW BRIDGE JOINT AT END ABUTMENT, ("MAC" JOINT).
5. REPAIR DECK AREA AT BEGINNING ABUTMENT WHERE ARMORING ANGLE WAS REMOVED.
6. PERFORM MINOR REPAIRS TO ASPHALT APPROACHES.
7. PERFORM MISCELLANEOUS REPAIRS TO CONCRETE ELEMENTS AT ABUTMENTS.

WORK TO BE DONE ON BIN 1093672:

1. ESTABLISH MP&T SCHEME FOR STAGE CONSTRUCTION.
2. REMOVE EXISTING BRIDGE JOINT AND ARMORING DECK ANGLE AT END ABUTMENT, (NORTH).
3. REMOVE ARMORING DECK ANGLE AT THE BEGINNING ABUTMENT, (SOUTH).
4. PLACE NEW BRIDGE JOINT AT END ABUTMENT, ("MAC" JOINT).
5. REPAIR DECK AREA AT BEGINNING ABUTMENT WHERE ARMORING ANGLE WAS REMOVED.
6. PERFORM MINOR REPAIRS TO ASPHALT APPROACHES.
7. PERFORM MISCELLANEOUS REPAIRS TO CONCRETE ELEMENTS AT ABUTMENTS.

NOTE:

"MAC" JOINT IS A MODIFIED ARMORED JOINT SYSTEM WITH COMPRESSION SEAL.

BIN 1093671 SOUTHBOUND
BIN 1093672 NORTHBOUND

ALL DIMENSIONS ARE IN m UNLESS OTHERWISE NOTED

AS BUILT REVISIONS

SIGNATURE DATE

INTERSTATE 481
OVER
KIRKVILLE ROAD

PLAN, ELEVATION AND BRIDGE SECTION

STATE OF NEW YORK
DEPARTMENT OF TRANSPORTATION

FILENAME	REGION	DATE	DRAWING NO.
305613AL.G1A	3	10/02	GP18-1

DESIGN SUPERVISOR ____ JOB MANAGER ____ DESIGNED BY ____ CHECKED BY ____ DRAFTED BY ____ ESTIMATED BY ____

FED ROAD REG. NO.	STATE	CONTRACT NO.	SHEET NO.	TOTAL SHEETS
1	N.Y.	D259214	335	432

BRIDGE REHABILITATION PROJECT (ELEMENT SPECIFIC)

VARIOUS BRIDGES ON INTERSTATE 481

TOWNS OF DEWITT AND CICERO

ONONDAGA COUNTY

P.I.N. 305613 | B.I.N. 1093671

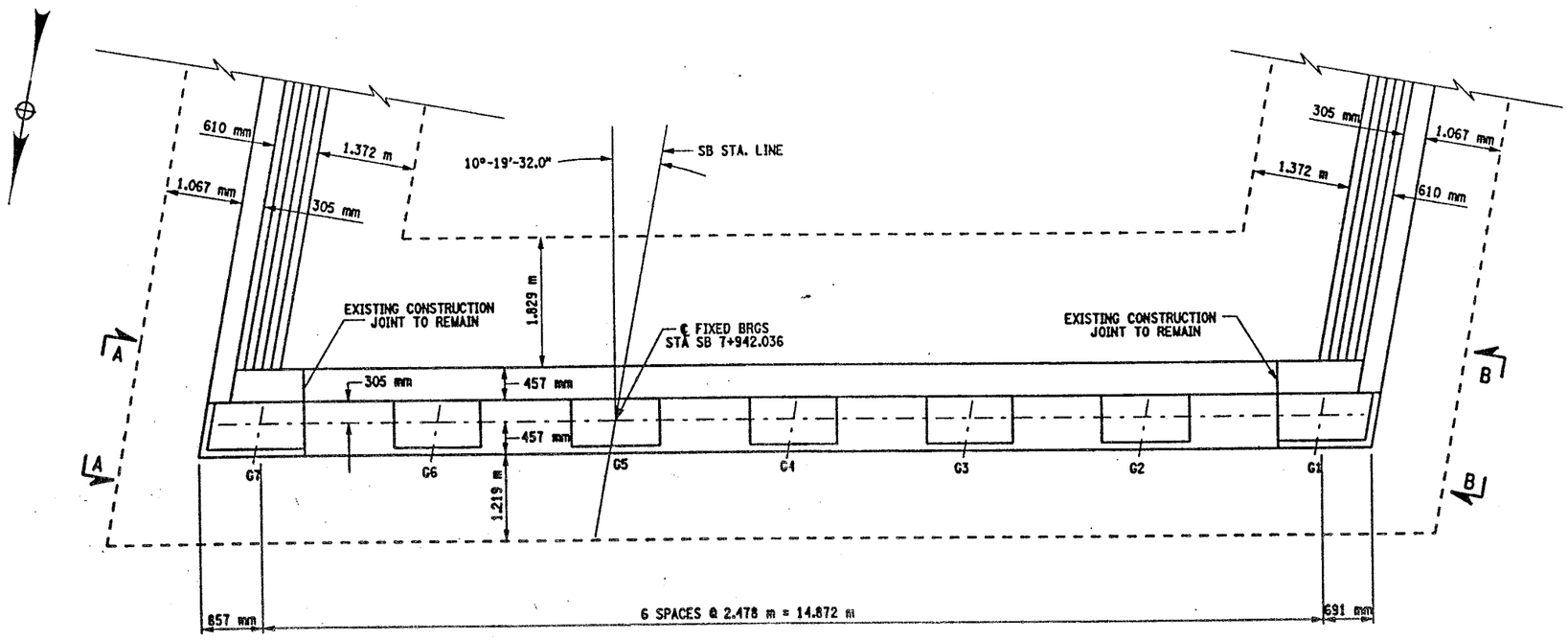

SOUTH ABUTMENT
PLAN
SCALE 1:40

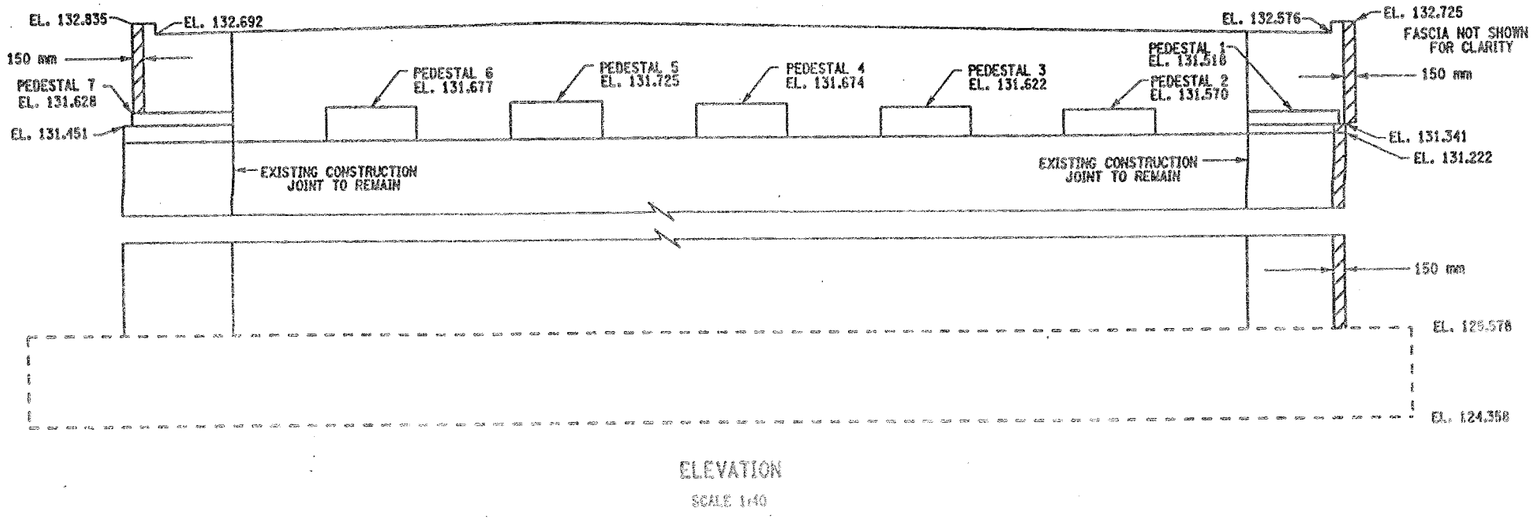

ELEVATION
SCALE 1:40

NOTES:

1. ALL DIMENSIONS SHOWN FOR CONCRETE REMOVAL ARE APPROXIMATE AND SHALL BE FIELD VERIFIED BY THE CONTRACTOR AND EIC.
2. REMOVE CONCRETE TO LIMITS SHOWN AS WELL AS TO SOUND CONCRETE, A.O.B.E.
3. WHEN REMOVING EXISTING CONCRETE, SAWCUT 5 mm MIN. TO PRODUCE NEAT REMOVAL LINES. ANY COST TO BE INCLUDED IN THE BID PRICE FOR ITEM 582.05M.
4. ALL EXISTING REINFORCEMENT TO REMAIN.
5. ELEVATIONS ARE GIVEN FOR QUANTITY ESTIMATES ONLY.
6. REFER TO CONTRACT FISH 70-7 FOR ORIGINAL CONSTRUCTION DETAILS AND D251436 FOR ADDITIONAL DETAILS.
7. FOR REMOVAL DETAIL SEE DWG. AB18-2
8. FOR SECTION A-A AND B-B SEE DWG. AB18-2

AREAS OF PROPOSED WORK: ITEM 582.05M REMOVAL OF STRUCTURAL CONCRETE-REPLACEMENT WITH CLASS A CONCRETE

LIST OF ITEMS USED:

ITEM 582.05M - REMOVAL OF STRUCTURAL CONCRETE-REPLACEMENT WITH CLASS A CONCRETE (CM)

ALL DIMENSIONS ARE IN m UNLESS OTHERWISE NOTED

AS BUILT REVISIONS

SIGNATURE DATE

INTERSTATE 481 SB
OVER
KIRKVILLE ROAD
SOUTH ABUTMENT
PLAN AND ELEVATION

STATE OF NEW YORK
DEPARTMENT OF TRANSPORTATION

FILENAME	REGION	DATE	DRAWING NO.
305613AL.A18	3	10/02	AB18-1

DESIGN SUPERVISOR ____ JOB MANAGER ____ DESIGNED BY ____ ESTIMATED BY ____ DRAFTED BY ____ CHECKED BY ____

FED ROAD REG. NO.	STATE	CONTRACT NO.	SHEET NO.	TOTAL SHEETS
1	N.Y.	D259214	336	432

BRIDGE REHABILITATION PROJECT (ELEMENT SPECIFIC)
VARIOUS BRIDGES ON INTERSTATE 481
TOWNS OF DEWITT AND CICERO
ONONDAGA COUNTY
P.I.N. 305613 B.I.N. 1093671

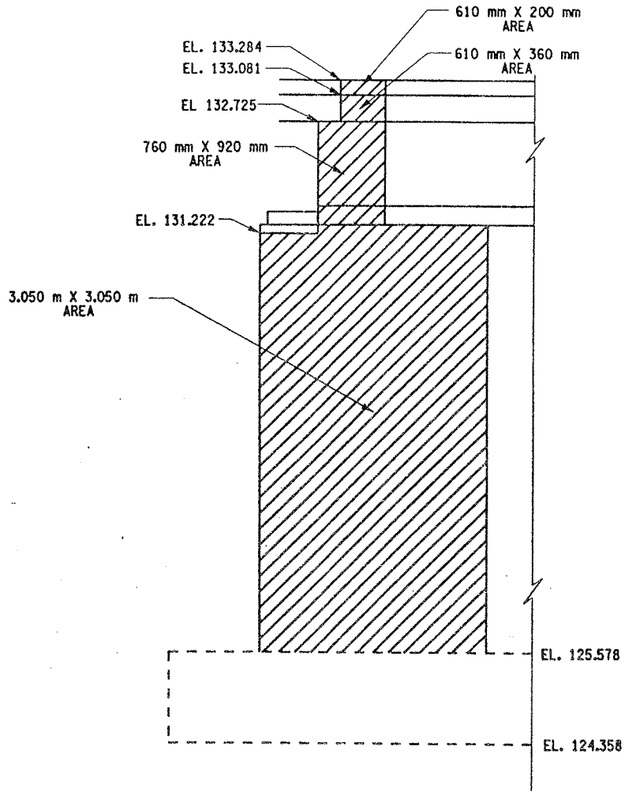

SECTION B-B
APPROXIMATE AREAS OF REPAIRS
SCALE 1:40

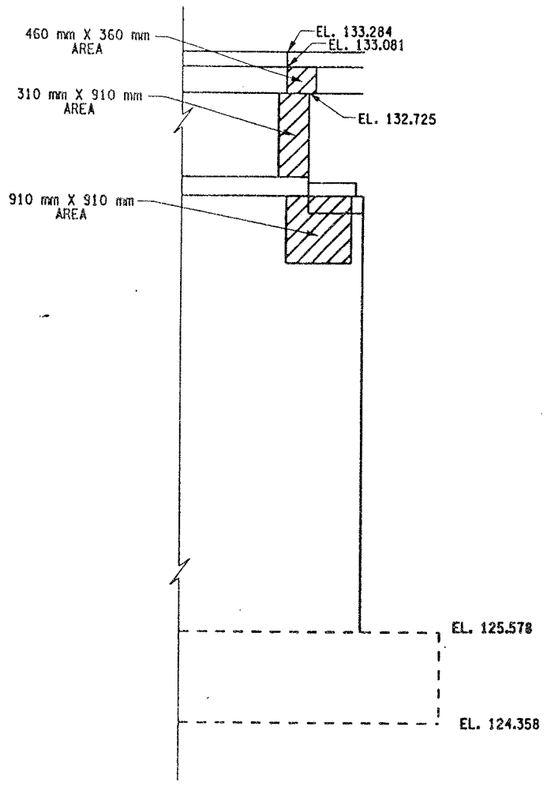

SECTION A-A
APPROXIMATE AREAS OF REPAIRS
SCALE 1:40

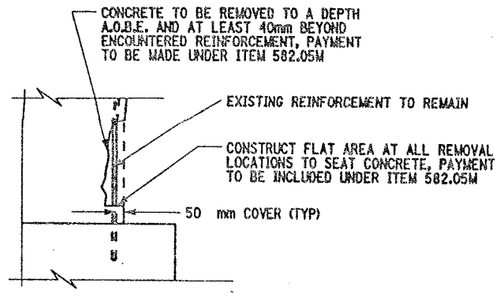

REMOVAL DETAIL
NOT TO SCALE

NOTES:

1. ALL DIMENSIONS SHOWN FOR CONCRETE REMOVAL ARE APPROXIMATE AND SHALL BE FIELD VERIFIED BY THE CONTRACTOR AND EIC.
2. REMOVE CONCRETE TO LIMITS SHOWN AS WELL AS TO SOUND CONCRETE, A.O.B.E.
3. WHEN REMOVING EXISTING CONCRETE, SAWCUT 5 mm MIN. TO PRODUCE NEAT REMOVAL LINES. ANY COST TO BE INCLUDED IN THE BID PRICE FOR ITEM 582.05M.
4. ALL EXISTING REINFORCEMENT TO REMAIN.
5. ELEVATIONS ARE GIVEN FOR QUANTITY ESTIMATES ONLY.
6. REFER TO CONTRACT FISH 70-7 FOR ORIGINAL CONSTRUCTION DETAILS AND D251436 FOR ADDITIONAL DETAILS.

AREAS OF PROPOSED WORK: ITEM 582.05M REMOVAL OF STRUCTURAL CONCRETE-REPLACEMENT WITH CLASS A CONCRETE

LIST OF ITEMS USED:

ITEM 582.05M - REMOVAL OF STRUCTURAL CONCRETE-REPLACEMENT WITH CLASS A CONCRETE (CM)

ALL DIMENSIONS ARE IN m UNLESS OTHERWISE NOTED

AS BUILT REVISIONS

SIGNATURE DATE

INTERSTATE 481 SB
OVER
KIRKVILLE ROAD
SOUTH ABUTMENT
SECTIONS

STATE OF NEW YORK
DEPARTMENT OF TRANSPORTATION

FILENAME	REGION	DATE	DRAWING NO.
305613AL.A18	3	10/02	AB18-2

DESIGN SUPERVISOR ____ JOB MANAGER ____ DESIGNED BY ____ ESTIMATED BY ____ DRAFTED BY ____ CHECKED BY ____

FED ROAD REG. NO.	STATE	CONTRACT NO.	SHEET NO.	TOTAL SHEETS
1	N.Y.	D259214	337	432

BRIDGE REHABILITATION PROJECT (ELEMENT SPECIFIC)
VARIOUS BRIDGES ON INTERSTATE 481
TOWNS OF DEWITT AND CICERO
ONONDAGA COUNTY
P.I.N. 305613 B.I.N. 1093671

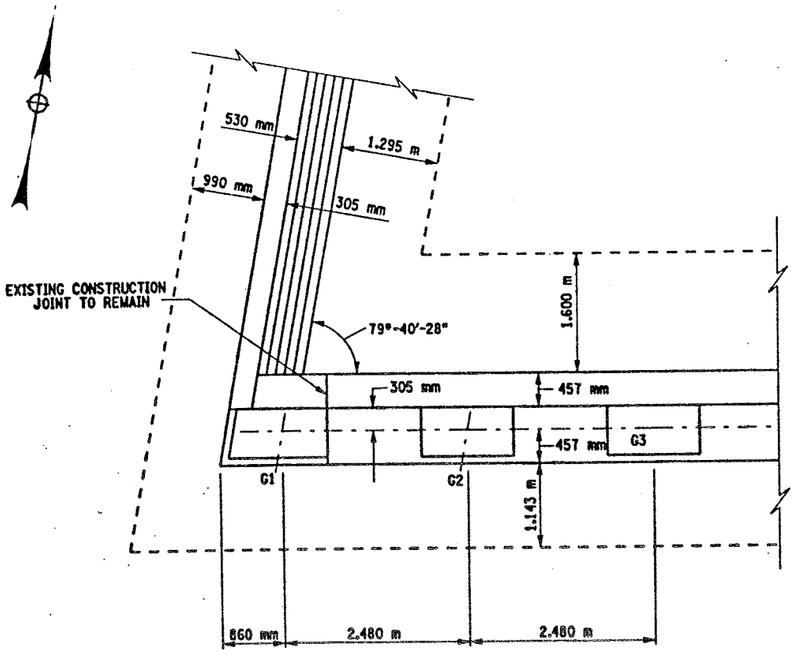

NORTH ABUTMENT
PLAN
SCALE 1:40

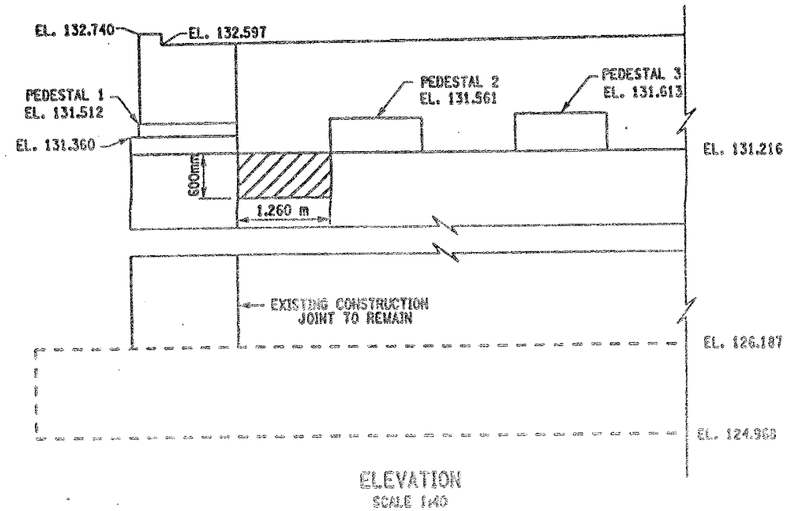

ELEVATION
SCALE 1:40

NOTES:

1. ALL DIMENSIONS SHOWN FOR CONCRETE REMOVAL ARE APPROXIMATE AND SHALL BE FIELD VERIFIED BY THE CONTRACTOR AND EIC.
2. REMOVE CONCRETE TO LIMITS SHOWN AS WELL AS TO SOUND CONCRETE, A.O.B.E.
3. WHEN REMOVING EXISTING CONCRETE, SAWCUT 5 mm MIN. TO PRODUCE NEAT REMOVAL LINES. ANY COST TO BE INCLUDED IN THE BID PRICE FOR ITEM 582.05M.
4. ALL EXISTING REINFORCEMENT TO REMAIN.
5. ELEVATIONS ARE GIVEN FOR QUANTITY ESTIMATES ONLY.
6. REFER TO CONTRACT FISH 70-7 FOR ORIGINAL CONSTRUCTION DETAILS AND D251436 FOR ADDITIONAL DETAILS.
7. FOR REMOVAL DETAIL SEE DWG. AB18-2

AREAS OF PROPOSED WORK: ITEM 582.05M REMOVAL OF STRUCTURAL CONCRETE-REPLACEMENT WITH CLASS A CONCRETE

LIST OF ITEMS USED:

ITEM 582.05M - REMOVAL OF STRUCTURAL CONCRETE-REPLACEMENT WITH CLASS A CONCRETE (CM)

ALL DIMENSIONS ARE IN m UNLESS OTHERWISE NOTED

AS BUILT REVISIONS

SIGNATURE DATE

INTERSTATE 481 SB
OVER
KIRKVILLE ROAD
NORTH ABUTMENT
PLAN AND ELEVATION

STATE OF NEW YORK
DEPARTMENT OF TRANSPORTATION

FILENAME	REGION	DATE	DRAWING NO.
305613AL.A18	3	10/02	AB18-3

DESIGN SUPERVISOR ____ JOB MANAGER ____ DESIGNED BY ____ DRAFTED BY ____ CHECKED BY ____ ESTIMATED BY ____ CHECKED BY ____

BIN: 1093671
I481 SB / Kirkville Rd

BEGIN ABUTMENT DETERIORATION SKETCH

NOT TO SCALE

DATE: 01/08/2014



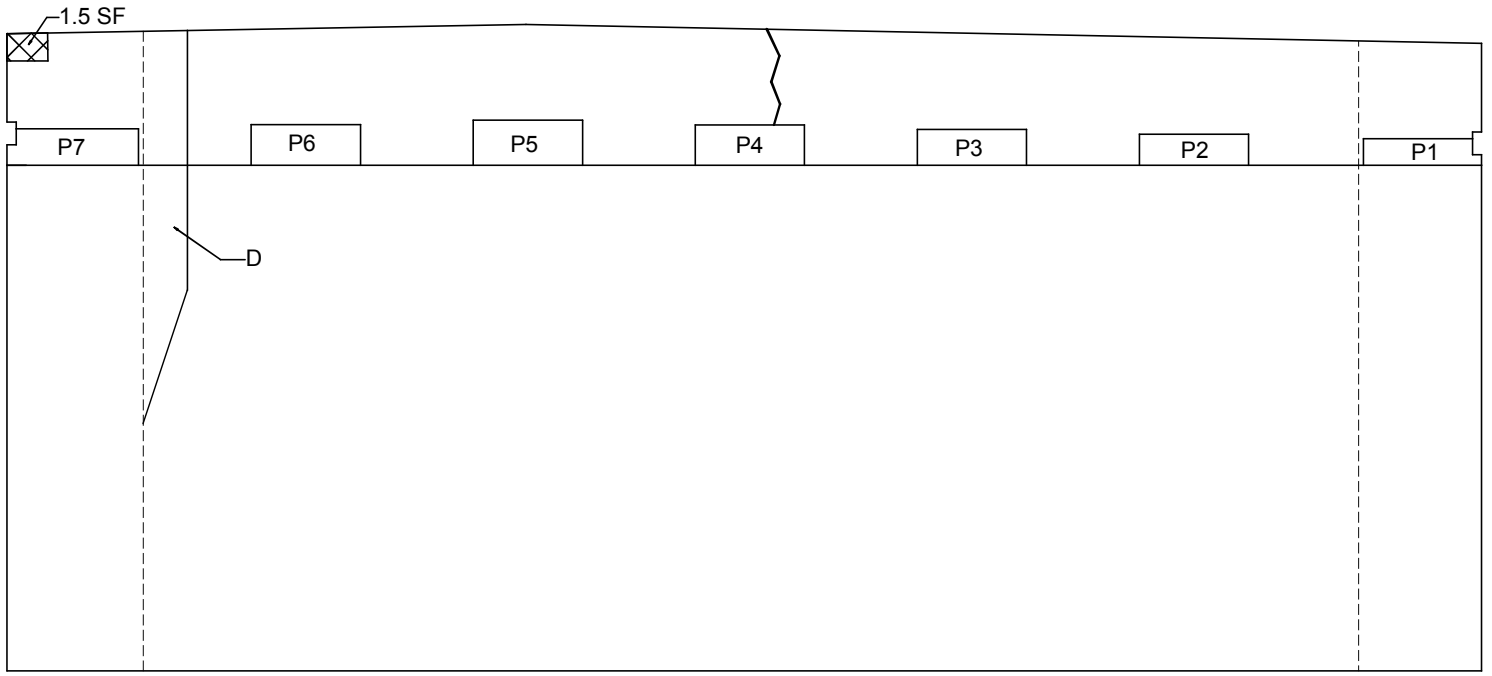

ELEVATION



PLAN

LEGEND	
	Spall
D	Damp
	Crack

BIN: 1093671
I481 SB / Kirkville Rd

END ABUTMENT DETERIORATION SKETCH

NOT TO SCALE

DATE: 01/08/2014



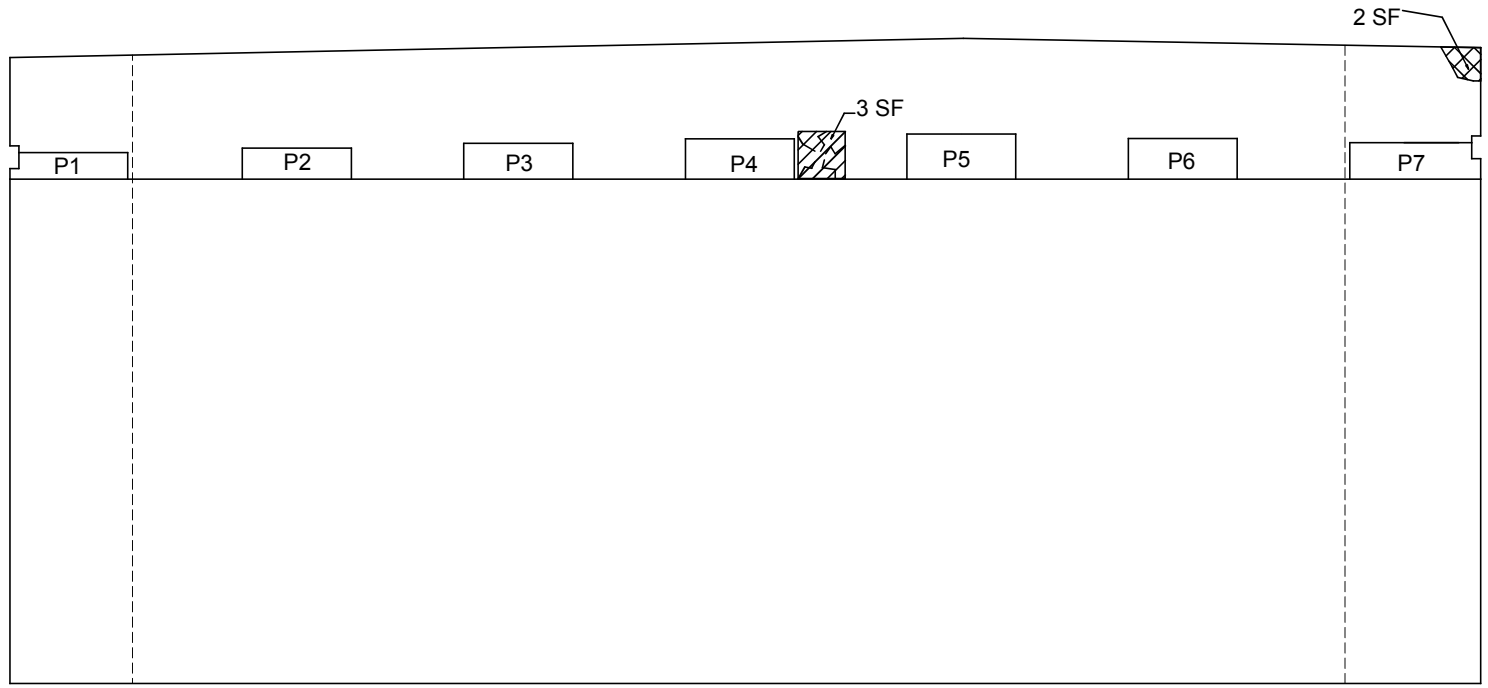

ELEVATION

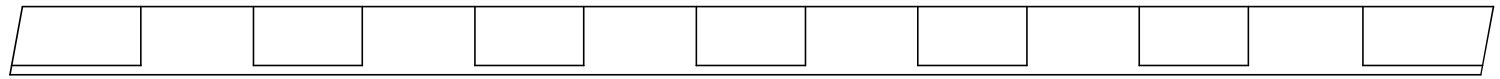

PLAN

LEGEND
Spall
Mapcrack
Hollow Concrete

BIN: 1093671
I481 SB / Kirkville Rd

TOP OF DECK DETERIORATION SKETCH

NOT TO SCALE

DATE: 01/08/2014

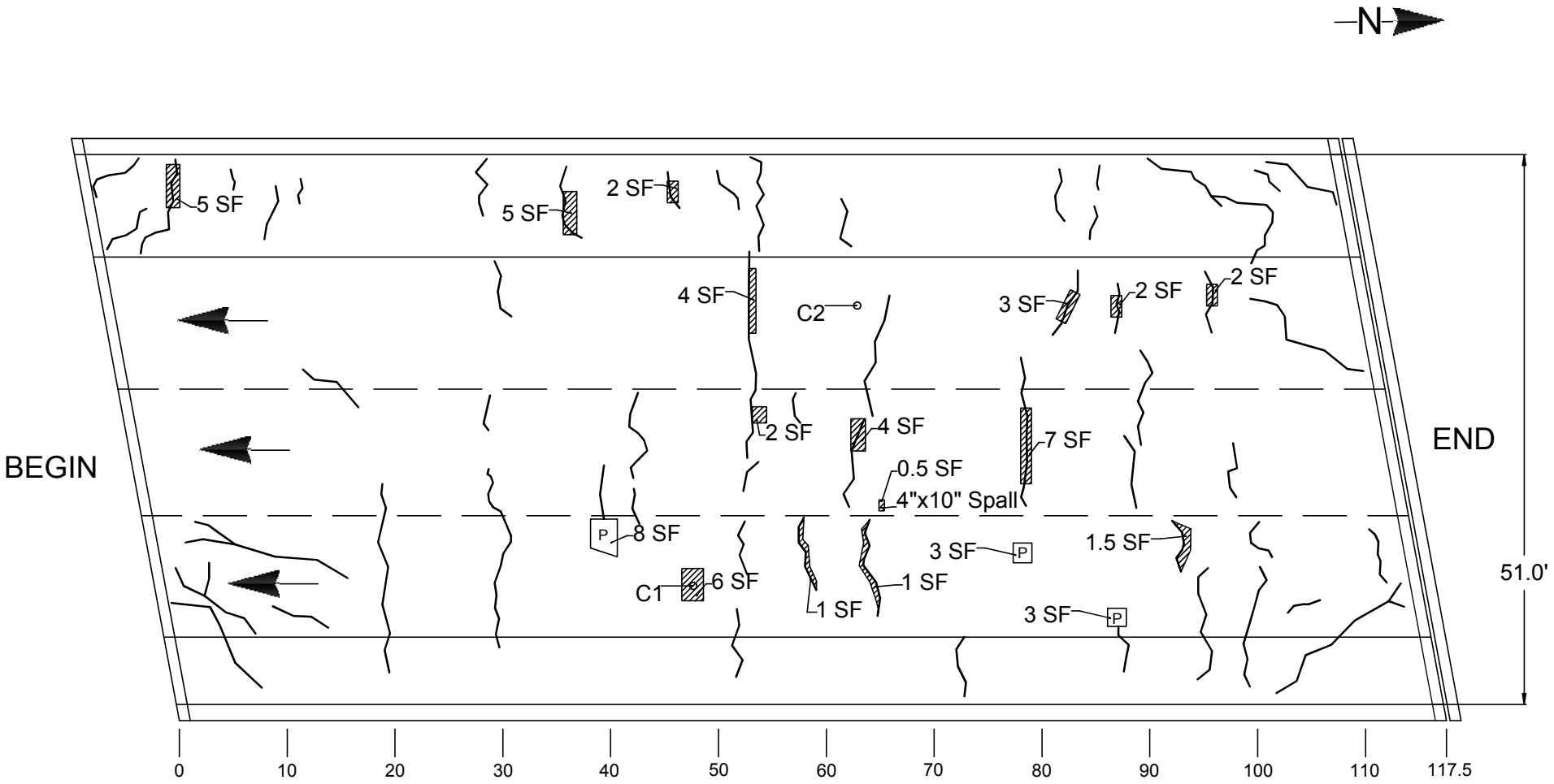

TOTAL DAMAGED AREA EQUALS 59 SF WHICH IS 1.0% OF DECK SURFACE

LEGEND			
P	Patch		Crack
	Hollow Concrete	○	Coring Location

BIN: 1093671
I481 SB / Kirkville Rd

UNDERSIDE OF DECK DETERIORATION SKETCH

NOT TO SCALE

DATE: 01/08/2014

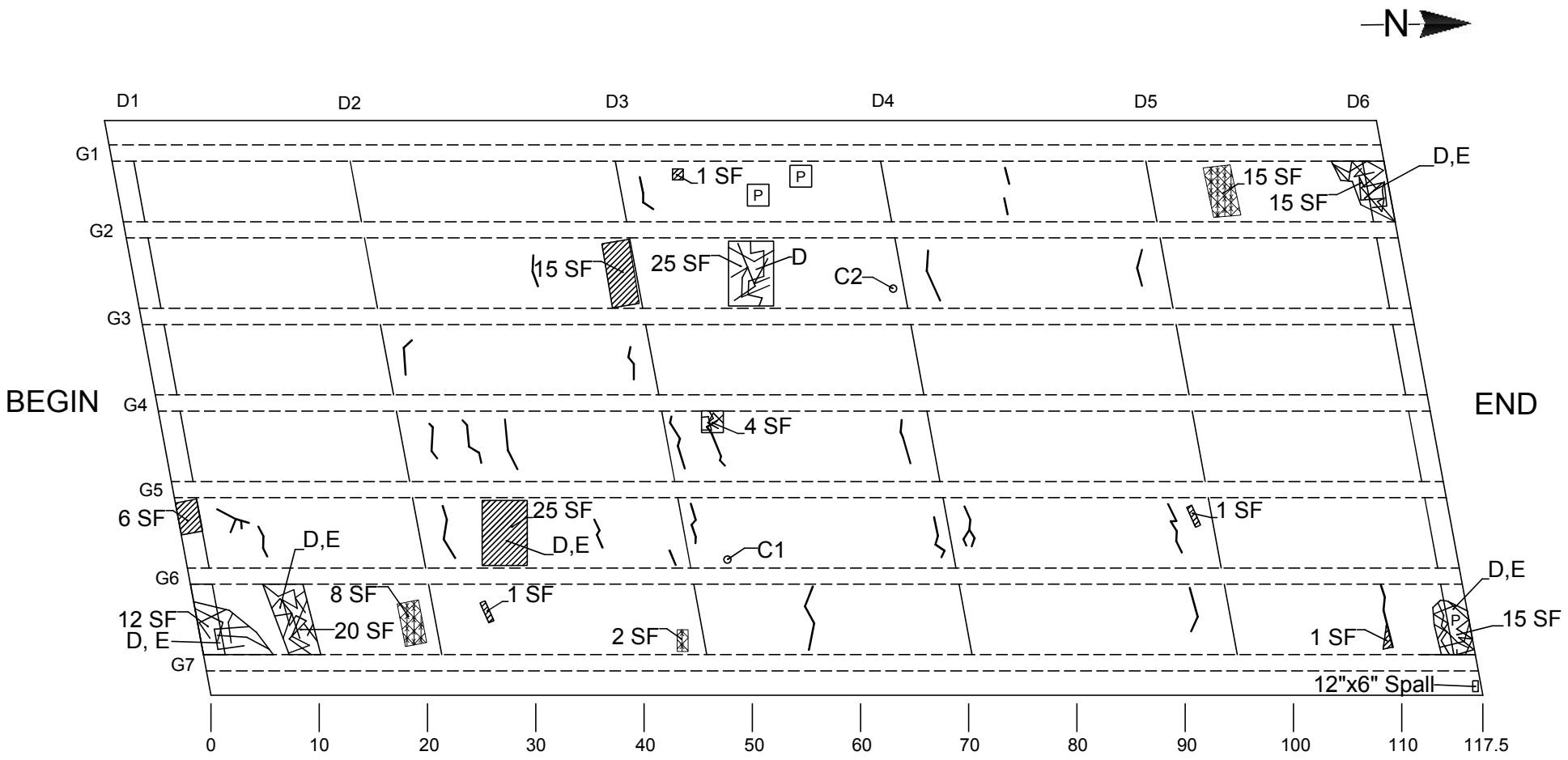

LEGEND

Mapcracking	P Patch
E Efflorescence	D Damp
Hollow Concrete	Crack
Spalling with Exposed Bars	Coring Location

TOTAL DAMAGED AREA EQUALS 166 SF WHICH IS 2.6% OF DECK SURFACE

IN-DEPTH PHOTO DOCUMENTATION

BIN: 1093671
I481 SB / Kirkville Rd

IN DEPTH INSPECTION
PHOTO LOCATION SKETCH

DATE: 01/08/2014

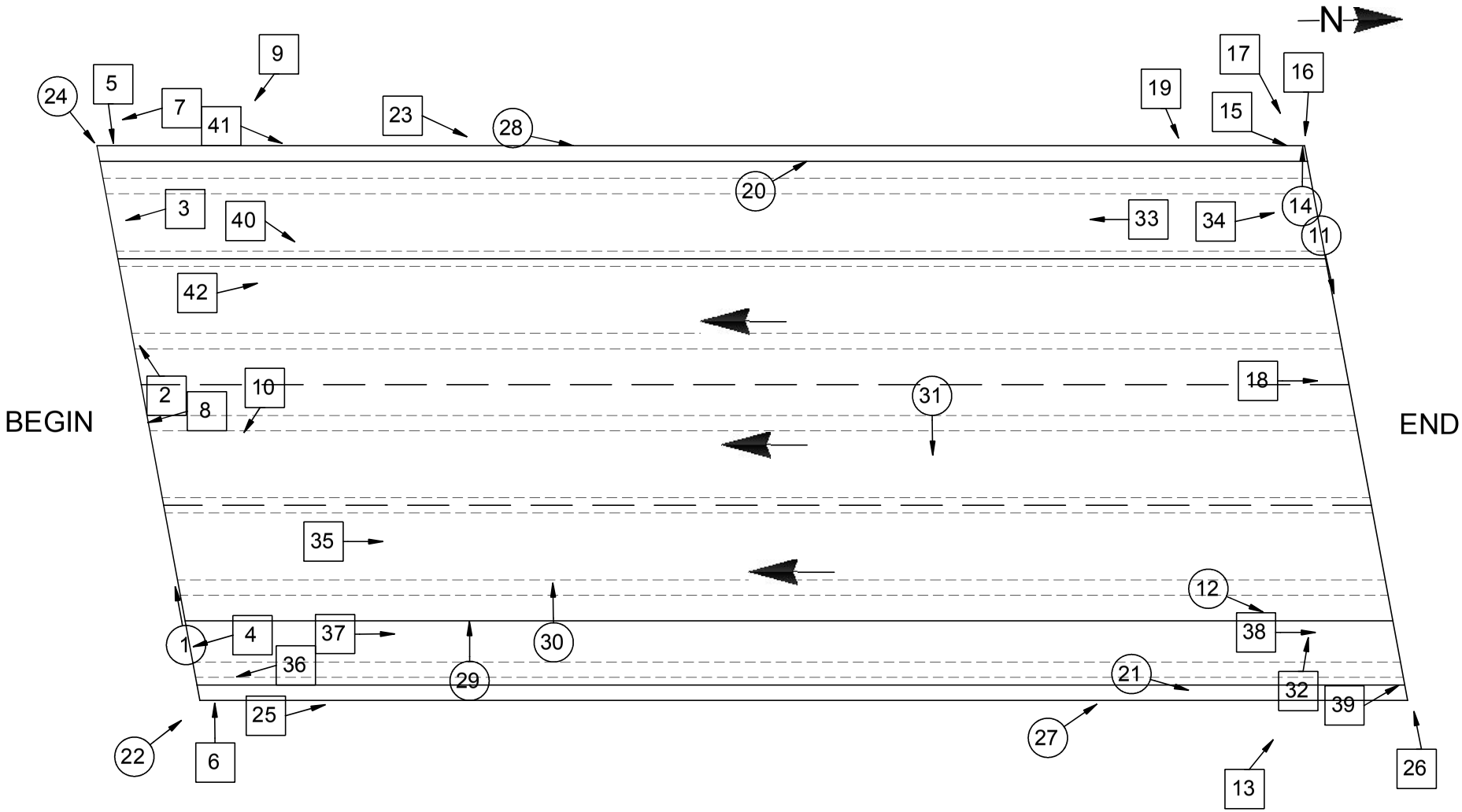

LEGEND

(XX) → Photo Above Deck

[XX] → Photo Below Deck



DESCRIPTION: BEGIN PAVEMENT TRANSITION – LOOKING FROM RIGHT TO LEFT

PHOTO 1



DESCRIPTION: BEGIN BACKWALL AT BAY 3 – LOOKING FROM RIGHT TO LEFT

PHOTO 2



DESCRIPTION: BEGIN BACKWALL AT BAY 1

PHOTO 3



DESCRIPTION: BEGIN BACKWALL AT BAY 6

PHOTO 4



DESCRIPTION: BEGIN BEARING AT G1 – LEFT SIDE

PHOTO 5



DESCRIPTION: BEGIN BEARING AT G7 – RIGHT SIDE

PHOTO 6



DESCRIPTION: BEGIN BACKWALL AT BEGIN LEFT

PHOTO 7



DESCRIPTION: BEGIN BACKWALL AT GIRDER G4

PHOTO 8



DESCRIPTION: BEGIN ABUTMENT – LOOKING FROM LEFT TO RIGHT

PHOTO 9



DESCRIPTION: BEGIN ABUTMENT EROSION – LOOKING FROM LEFT TO RIGHT

PHOTO 10



DESCRIPTION: END JOINT WITH DECK, LEFT LANE NEAR CENTERLINE – LOOKING FROM LEFT TO RIGHT

PHOTO 11



DESCRIPTION: END RIGHT DECK – LOOOKING FROM BEGIN TO END

PHOTO 12



DESCRIPTION: END ABUTMENT – LOOKING FROM RIGHT TO LEFT

PHOTO 13



DESCRIPTION: END LEFT SAFETY WALK HEADER

PHOTO 14



DESCRIPTION: END ABUTMENT BEARING G1 – LEFT SIDE

PHOTO 15



DESCRIPTION: END ABUTMENT BEARING G1 – LEFT SIDE

PHOTO 16



DESCRIPTION: END ABUTMENT - LEFT BACKWALL

PHOTO 17



DESCRIPTION: END ABUTMENT BACKWALL @ BAY 3

PHOTO 18



DESCRIPTION: END ABUTMENT EROSION – LOOKING FROM LEFT TO RIGHT

PHOTO 19



DESCRIPTION: LEFT SAFETY WALK RAILING BAY 5 – LOOKING FROM BEGIN TO END (TYPICAL)

PHOTO 20



DESCRIPTION: RGHT SAFETY WALK NEAR END – LOOKING FROM BEGIN TO END

PHOTO 21



DESCRIPTION: BEGIN RIGHT FASCIA

PHOTO 22



DESCRIPTION: LEFT FASCIA – LOOKING FROM BEGIN TO END (TYPICAL)

PHOTO 23



DESCRIPTION: BEGIN LEFT FASCIA

PHOTO 24



DESCRIPTION: RIGHT FASCIA – LOOKING FROM BEGIN TO END (TYPICAL)

PHOTO 25



DESCRIPTION: END RIGHT FASCIA

PHOTO 26



DESCRIPTION: RIGHT SIDE SNOW PANEL 7 (TYPICAL)

PHOTO 27



DESCRIPTION: LEFT SIDE SNOW FENCE AT PANEL 5

PHOTO 28



DESCRIPTION: TOP OF DECK NEAR 1/3 SPAN – LOOKING FROM RIGHT TO LEFT (TYPICAL)

PHOTO 29



DESCRIPTION: TOP OF DECK PATCH – RIGHT LANE - LOOKING FROM RIGHT TO LEFT

PHOTO 30



DESCRIPTION: TOP OF DECK NEAR MID-SPAN – LOOKING FROM LEFT TO RIGHT

PHOTO 31



DESCRIPTION: UNDER DECK BAY 6 NEAR END LOOKING RIGHT TO LEFT (TYPICAL)

PHOTO 32



DESCRIPTION: UNDER DECK BAY 1 2 DIAPHRAGM 5– RIGHT LANE - LOOKING FROM END TO BEGIN

PHOTO 33



DESCRIPTION: UNDER DECK BAY 1 @ END - LOOKING FROM BEGIN TO END

PHOTO 34



DESCRIPTION: UNDER DECK BAY 5 IN DIAPHRAGM BAY 2 - LOOKING FROM BEGIN TO END

PHOTO 35



DESCRIPTION: UNDER DECK BAY 6 @ BEGIN - LOOKING FROM END TO BEGIN

PHOTO 36



DESCRIPTION: UNDER DECK BAY 6 IN DIAPHRAGM BAY 1 - LOOKING FROM BEGIN TO END

PHOTO 37



DESCRIPTION: UNDER DECK BAY 6 @ END - LOOKING FROM BEGIN TO END

PHOTO 38



DESCRIPTION: HAUNCH AT END RIGHT ABUTMENT

PHOTO 39



DESCRIPTION: FRAMING - LOOKING FROM BEGIN TO END

PHOTO 40



DESCRIPTION: GIRDER G1 LEFT SIDE - LOOKING FROM BEGIN TO END

PHOTO 41



DESCRIPTION: GIRDER G2 RIGHT SIDE - LOOKING FROM BEGIN TO END (TYPICAL)

PHOTO 42

ASBESTOS SAMPLING SURVEY

Asbestos Sampling Survey

Location:

BIN 1-09367-1
Interstate Route 481 South Bound over Kirkville Road

Prepared for:

New York State
Department of Transportation

PIN 3804.00.101

LaBella Project No. 97132

May, 1998

Table of Contents

Page

I. Project Summary 1

II. Site Description 1

III. Inspection Procedures 1

IV. Results 2

Certification 2

Figures and Table

I. Project Summary

In accordance with conditions of Term Agreement D010010, LaBella Associates, P.C. conducted an asbestos sampling survey of the Interstate Route 481 South Bound Bridge over Kirkville Road. Based on laboratory analyses of bulk samples collected, the following material was determined to contain asbestos:

BIN 1-09367-1 Interstate Route 481 South Bound over Kirkville Road

Type of Material	Estimated Amount
Sheet Packing	10 Square Meters

II. Site Description

The Site is located in Onondaga County, New York. For the purpose of this report, the Site consists of the Interstate Route 481 South Bound Bridge over Kirkville Road (See attached FIGURE 1 - Site Location Map).

III. Inspection Procedures

The following procedures were used to obtain the data for this Report:

A. A review of record drawings supplied by Region 3 personnel and a visual inspection of the subject structure were conducted to identify potential visible/accessible sources of asbestos-containing materials. Observations and notes were made to provide a description of the structure, and an estimate of the approximate amount, length, or area of ACM present.

B. Physical or operational constraints which might affect the removal of the ACM were identified and reported.

C. Bulk samples of suspected ACM were collected during the site inspection of the subject structure. Samples were taken from each homogeneous area that may contain ACM.

D. Samples were submitted for analysis. Preliminary PLM analyses of NOB materials were performed by LaBella Laboratories, a NYSDOH approved laboratory, to determine the presence and percentage of asbestos in each sample. TEM analyses of NOB materials, if necessary, were performed by EMSL Analytical, Inc. or New York Testing Laboratories, Inc.

E. Lab results were used to determine the approximate location, type, and amount of the verified ACM.

F. A drawing of the structure at the Site was created, in order to show sample locations and the approximate locations and amounts of confirmed ACM observed in accessible locations.

Only accessible areas were inspected. Inaccessible areas, such as areas within the bridge or the approaches to the bridge were not included in this inspection. No investigation was conducted by LaBella Associates to determine the presence of underground utilities on or in the immediate vicinity of the Site. Actual sample locations are shown in the attached FIGURE 2. Results of bulk sample analyses are tabulated in the attached TABLE.

IV. Results

BIN 1-09367-1 Interstate Route 481 South Bound over Kirkville Road

Sheet Packing

Asbestos-containing sheet packing is located between the tops of the abutments and the deck slab at both ends of the bridge. Most of this material is presently covered by the bridge deck, although the edges of this sheet packing are exposed and visible at various locations.

It is estimated that the total amount of this asbestos-containing sheet packing material on the bridge is approximately 10 square meters. This estimate is based on field measurements taken at the time of the site visit.

The approximate locations of this asbestos-containing sheet packing are shown in FIGURE 2.

Certification

LaBella Associates, P.C. certifies the accuracy of this report, to the best of our knowledge, based on the information collected as described in the Inspection Procedures Section of this investigation.

Figures & Table

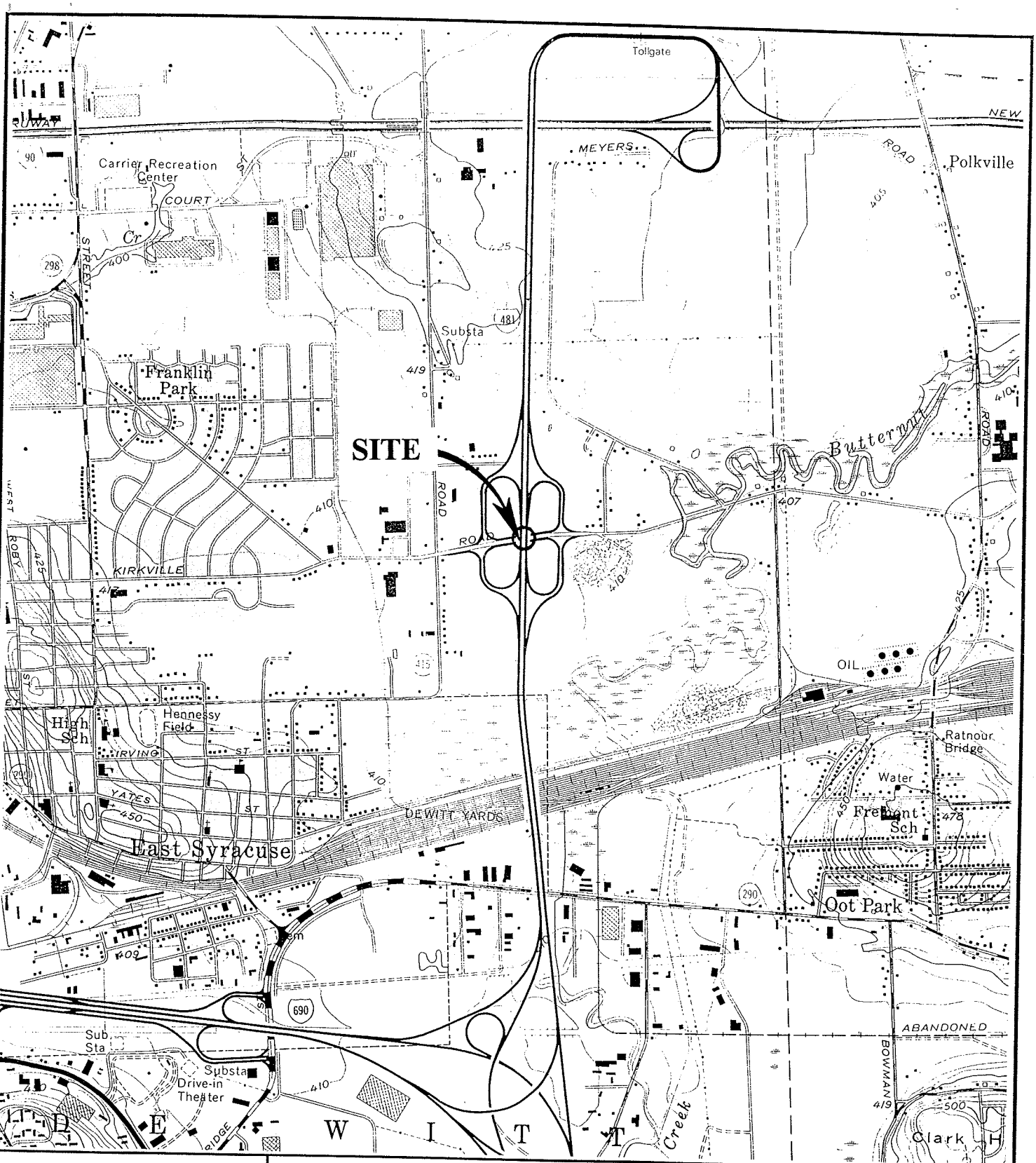

N

SCALE: 1" = 2000'

FIGURE 1
Site Location Map

I-481 SOUTH BOUND OVER KIRKVILLE ROAD

BIN 1-09367-1

LABELLA

PROJECT NO. 97132

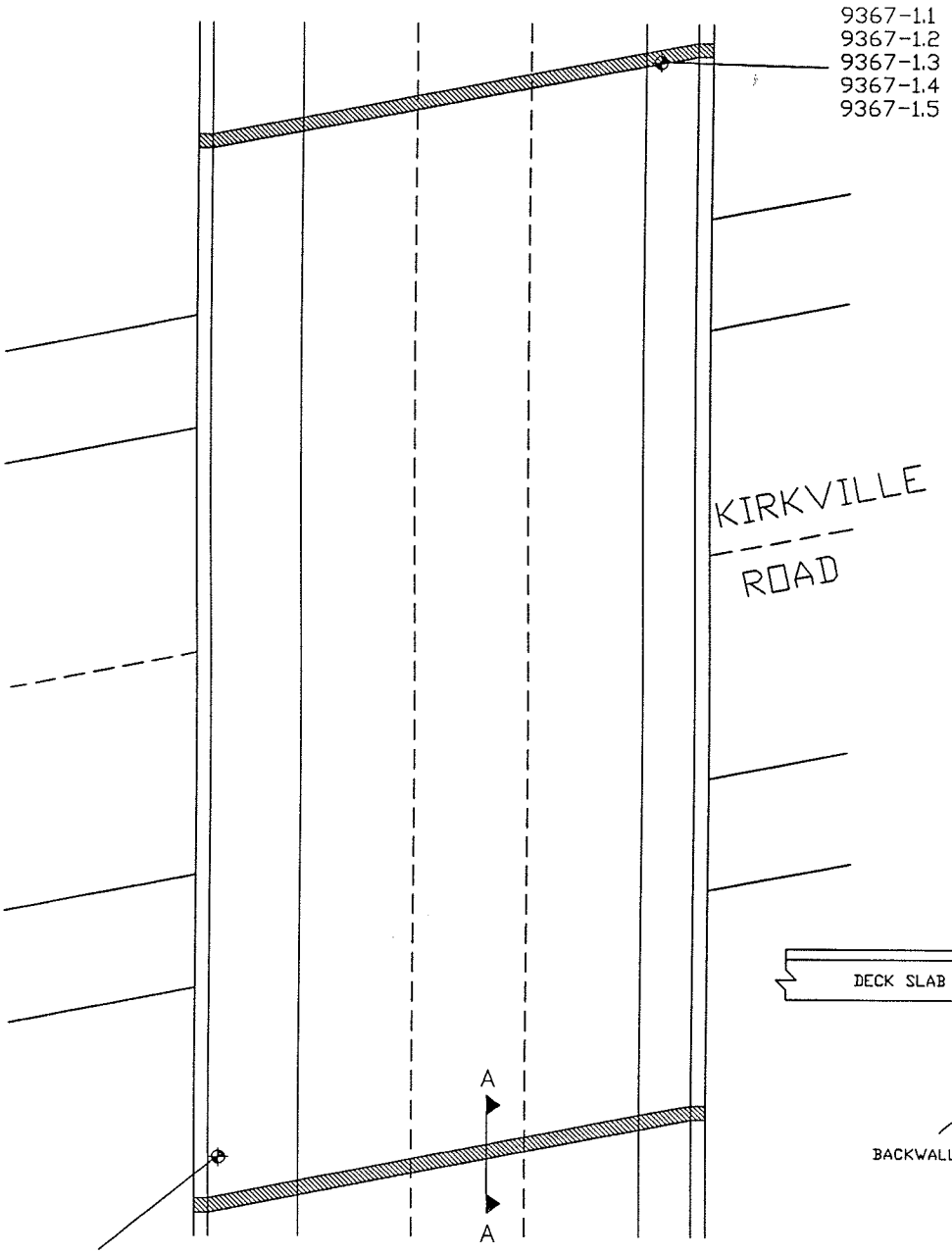

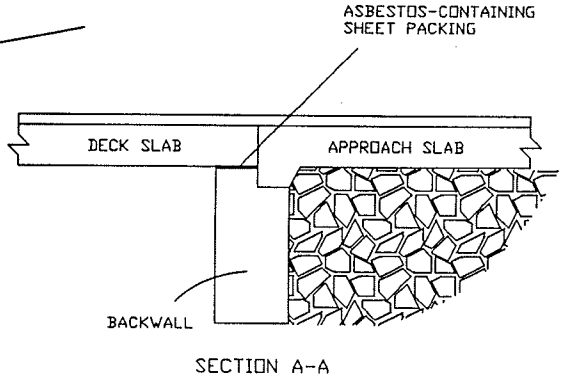

SECTION A-A

I-481 SOUTH BOUND
BIN 1-09367-1

LEGEND

- 9367-1.1 SAMPLE LOCATION
- ASBESTOS-CONTAINING SHEET PACKING

NORTH	PROJECT TITLE: ASBESTOS SAMPLING SURVEY 16 BRIDGES, ONONDAGA COUNTY, NEW YORK	PROJECT NO. 97132
		PIN 3804.00.101
	FIGURE 2: I-481 SOUTH BOUND OVER KIRKVILLE ROAD BIN 1-09367-1 SAMPLE LOCATIONS AND CONFIRMED ACM	NOT TO SCALE
		DATE: MAY, 1998

Bulk Sample Results Table

Asbestos Sampling Survey
BIN 1-09367-1
Interstate Route 481 South Bound over Kirkville Road
Onondaga County, New York
LaBella Project # 97132
PIN 3804.00.101

Sample #	Sample Location	Type of Material	Results % Asbestos	Amount of Material	Specification Item No.
9367-1.1	**North End of Bridge Between Deck & Abutment**	**Sheet Packing**	**34% Chrysotile**	**10 Square Meters**	**15202.0627 (M)**
9367-1.2	North End of Bridge On Abutment	Masonry Coating	None Detected	N/A	N/A
9367-1.3	North End of Bridge, on East I-Beam	Green Paint	None Detected	N/A	N/A
9367-1.4	North End of Bridge Under Bearing	Bearing Pad	None Detected	N/A	N/A
9367-1.5	North End of Bridge, on Inside I-Beam	Green Paint	None Detected	N/A	N/A
9367-1.6	South End of Bridge, on West I-Beam	Green Paint	None Detected	N/A	N/A

ATHENICA
ENVIRONMENTAL SERVICES INC.
Tel (718) 784-7490
Fax (718) 784-4085

BULK (NOB) ASBESTOS ANALYSIS BY POLARIZED LIGHT MICROSCOPY AND TRANSMISSION ELECTRON MICROSCOPY

CLIENT: NYS DOT / Region 3
LABORATORY ID #: 04-09-255
DATES OF ANALYSIS: 10/1/04

PROJECT: Bin # 1093671
ANALYT. METHODOLOGIES: ELAP 198.1, ELAP 198.4
DATE OF REPORT: 10/12/04

LABORATORY RESULTS

CLIENT #	LAB. ID #	LOCATION	%ORG	%ASI	%AII	PLM RESULTS	TYPE OF ASBEST.	TEM RESULTS	TYPE OF ASBEST.	POSIT. / NEGAT.
01	04-09-255-01	Steel Paint Coating G-6 Bottom Flange @ End	47.47	12.53	40.00	**ND**	NA	**ND**	NA	**Negat.**
02	04-09-255-02	Steel Paint Coating End Bearing # 3	46.00	8.57	45.43	**ND**	NA	**ND**	NA	**Negat.**
03	04-09-255-03	Steel Paint Coating End Bearing # 2	32.11	10.03	57.86	**ND**	NA	**ND**	NA	**Negat.**

E. Sioukri

ANALYST
E. Sioukri

LABORATORY DIRECTOR
Spiro Dongaris

LABORATORY CERTIFICATION NUMBERS: NVLAP 101958, ELAP 10955

- Athenica Environmental Services Inc. (AES), is responsible only for information pertaining to samples taken by its employees.
- Samples will be stored for sixty (60) days. AES Inc., should be notified within this time frame for a true duplicate analysis.
- The report relates only to items tested. This report must not be used to claim product endorsement by NVLAP or any other agency of the U.S. Government. Test reports may not be reproduced except in full and with prior approval of AES Inc.
- The liability of Athenica Environmental Services Inc. with respect to the services charged, shall in no event exceed the amount of the invoice.

ATHENICA
ENVIRONMENTAL SERVICES INC.
45-09 GREENPOINT AVENUE
LONG ISLAND CITY, NY 11104
Tel. (718) 784-7490
Fax. (718) 784-4085

NYS DOT / REG. 3

SITE: BLN # 1043671

PROJECT NO. (ATHENICA FILE#): C003314

DATE: 9/23/ 200

METHOD OF SHIPMENT: U.S. MAIL

INSPECTOR: BRUCE OPALKA

NUMBER OF SAMPLES: 3

TYPE OF ANALYSIS REQUESTED: [ ] PLM [X] NOB-PLM [X] NOB-TEM [ ] OTHERS

TURNAROUND TIME: [ ] 6 HRS [ ] 12 HRS [ ] 24 HRS [X] OTHER HRS

COMMENTS: ATT: CHRISTOPHER ANDERSON
333 E. WASHINGTON ST. SYRACUSE, N.Y. 13202

HOM. AREA	SAMLPLE #	SAMPLE DESCRIPTION	SAMPLE LOCATION	FIELD COMMENTS	LABORATORY RESULTS		
					PLM	PLM-NOB	TEM-NOB
	01	STEEL PAINT COAT	G-6 BOTTOM FLANGE @ END				
	02	"	END BEARING # 3				
	03	"	END BEARING #2				

TRANSMITTAL OF RESULTS :
[X] STANDARD
[ ] TELEPHONE RESULTS TO
[ ] FAX RESULTS TO

TELEPHONE # : (315) 428-4628
FAX # :

BATCH # : 04-09-255

CHAIN OF CUSTODY RECORD

RELINQUISHED BY :	Kent Way NYNAR	DATE :	9/23/ 200 4	TIME :	1:00 PM
RECEIVED BY :		DATE :	9/29 / 200 4	TIME :	
ANALYST :		DATE :	10/1 / 200	TIME :	

LABORATORY ACCREDITATION :
NVLAP# 101958 ELAP# 10955

LATEST BIENNIAL INSPECTION REPORT

Inspection Date: 10/10/2012 RC: 33 BIN: 1093671

Bridge Ratings

Carried: 481I 481I33012078 Crossed: KIRKVILLE RD-CR53 CheckValue: 1,799,748,546

Inspection Agency: 10 - NYSDOT Type of Inspection: 1 - BIENNIAL
GTMS: 302 -- Steel - Stringer/Multi-Beam or Girder
POSTINGS: See Gen Rec Page 1 for Postings at time of inspection.
Further Investigation Needed: No
State Highway Number: 70-7 Milepoint: 8.31 AADT/Yr: 22949 / 2002
Orientation: 1 - North Political Unit: 0233 - Town of DEWITT Year Built: 1972
Total Spans: 1 Ramp Bridge Attached To Span: NA BIN: NA
General Recommendation: 5 Computed Condition Rating: 4.656

Abutment Ratings:	Beg Abut	End Abut
Joint with Deck	8	5
Bearings, Bolts, Pads	5	3
Seats and Pedestals	4	4
Backwall	5	5
Stem (Breastwall)	5	5
Erosion or Scour	5	5
Footings	9	9
Piles	9	9
Recommendation	5	5

Wingwall Ratings:	Beg Abut	End Abut
Walls	5	5
Footings	9	9
Erosion or Scour	6	6
Piles	9	9

Channel Ratings:	Channel
Stream Alignment	8
Erosion and Scour	8
Waterway Opening	8
Bank Protection	8

Approach Ratings:	Approaches
Drainage	4
Embankment	6
Settlement	4
Erosion	4
Pavement	4
Guide Railing	5

Number of Flags Issued:

RED: 0 Yellow: 0 Safety: 0

Vulnerability Reviews Recommended: 1=Yes, 2=No, 3=NA, X=NotActive

Hydraulic: 3	Overload: X	Steel: 2
Collision: 2	Concrete: X	Seismic: X

Inspector's Signature: CheckValue: 1,799,748,546 Date: 10/10/2012

David Hann,PE () (Inspector ID:3000055)

Signed copy of this inspection report is available in the appropriate NYSDOT Regional Office

Reviewed By: Date: 11/21/2012

James R. Manning,PE () (QC ID:3000023)

Signed copy of this inspection report is available in the appropriate NYSDOT Regional Office

Inspection Date: 10/10/2012 RC: 33 BIN: 1093671

Span Ratings

Carried: 481I 481I33012078 Crossed: KIRKVILLE RD-CR53 CheckValue: 1,799,748,546

Deck Element Ratings:	001
Wearing Surface	5
Curbs	6
Sidewalks, Fascias	4
Railings, Parapets	5
Scuppers	8
Gratings	8
Median	8
Mono Deck Surface	5

Superstructure Ratings:	001
Structural Deck	4
Primary Members	5
Secondary Members	6
Paint	4
Joints	8
Recommendation	5

Pier Ratings:	001
Bearings, Bolts, Pads	8
Pedestals	8
Top of Cap or Beam	8
Stem Solid Pier	8
Cap Beam	8
Pier Columns	8
Footings	8
Erosion or Scour	8
Piles	8
Recommendation	8

Utility Ratings:	001
Lighting	8
Sign Structure	8
Utilities and Support	8

Field Notes:

Field Date	Arrival	Departure	Temp (C)	Temp (F)	Weather Conditions
10/10/2012	7:30:00 AM	2:30:00 PM		45	Mostly cloudy

Inspection Date: 10/10/2012 RC: 33 BIN: 1093671

Inspection Notes

Carried: 481I 481I33012078 Crossed: KIRKVILLE RD-CR53 CheckValue: 1,799,748,546

Note ID: 351210936710000

Beg Abut -- Abutment: Seats and Pedestals -- Rated 4, Was 4
End Abut -- Abutment: Bearings, Bolts, Pads -- Rated 3, Was 5
End Abut -- Abutment: Seats and Pedestals -- Rated 4, Was 4
Referenced Photos: "1"
2012 - The begin, end bearings, and seat are covered with pigeon debris and the end bearings are filled with pack rust and previous paint. They are frozen and therefore a 3.

Note ID: 351210936710001

Beg Abut -- Wingwalls: Walls -- Rated 5, Was 4
End Abut -- Wingwalls: Walls -- Rated 5, Was 4
Referenced Photos: "2"
2012 - The wingwalls and stems have been patched and sealed, althought mapcracks and efflo leaks can be seen near the top of wingwalls, but rated a 5.

Note ID: 351210936710002

Approaches: Drainage -- Rated 4, Was 4
Approaches: Erosion -- Rated 4, Was 5
Referenced Photos: "3"
2012 - The begin left at the end of the granite runnout has the last granite section falling into the gully and further down it opens up to 5' wide by 3' deep.

Note ID: 351210936710003

Approaches: Settlement -- Rated 4, Was 6
Approaches: Pavement -- Rated 4, Was 5
Referenced Photos: "4", "5"
2012 - The begin and end apshalts are mapcracked and slighltly settled from the slapping of vehicle tires. The begin is breaking up approx. 6" from the begin of bridge.

Note ID: 351210936710004

Span 001 -- Deck Elements: Sidewalks, Fascias -- Rated 4, Was 4
Referenced Photos: "6"
2012 - The begin left fascia at the left side of the joint has a spall.

Note ID: 351210936710005

Span 001 -- Superstructure: Structural Deck -- Rated 4, Was 5
Referenced Photos: "7", "8"
2012 - The deck has a few areas that are saturated/spalled/delaminated. See deck sketch.

Inspection Date: 10/10/2012 RC: 33 BIN: 1093671

Inspection Notes

Carried: 481I 481I33012078 Crossed: KIRKVILLE RD-CR53 CheckValue: 1,799,748,546

Note ID: 351210936710006

Span 001 -- Superstructure: Paint -- Rated 4, Was 4
Referenced Photos: "9", "10"
2012 - The paint system is failing on the bottom flanges mainly and the top of the fascia outside flanges. It starting to spread to the webs.

Inspection Date: 10/10/2012 RC: 33 BIN: 1093671

Inspection Photos in Photo Number Order

Carried: 481I 481I33012078 Crossed: KIRKVILLE RD-CR53 CheckValue: 1,799,748,546

End Bearing #7 And Seat (typ)



Photo Number: 1 Photo Filename: 12EnBrg7Seat.jpg

End Left Wingwall (typ)



Photo Number: 2 Photo Filename: 12EndLtWW.jpg

Inspection Date: 10/10/2012 RC: 33 BIN: 1093671

Inspection Photos in Photo Number Order

Carried: 481I 481I33012078 Crossed: KIRKVILLE RD-CR53 CheckValue: 1,799,748,546

Begin Left Drainage an Erosion



Photo Number: 3 Photo Filename: 12BegLtdrain.jpg

Begin Pavement And Settlement, Looking from left to Right



Photo Number: 4 Photo Filename: 12BegPavt.jpg

Inspection Date: 10/10/2012 RC: 33 BIN: 1093671

Inspection Photos in Photo Number Order

Carried: 481I 481I33012078 Crossed: KIRKVILLE RD-CR53 CheckValue: 1,799,748,546

End Pavement And Settlement



Photo Number: 5 Photo Filename: 12EndPavJt.jpg

Begin Left Fascia



Photo Number: 6 Photo Filename: 12BegLtFascia.jpg

Inspection Date: 10/10/2012 RC: 33 BIN: 1093671

Inspection Photos in Photo Number Order

Carried: 481I 481I33012078 Crossed: KIRKVILLE RD-CR53 CheckValue: 1,799,748,546

Deck, End Bay 1
Looking from End to Begin



Photo Number: 7 Photo Filename: 12deckEndBay1.jpg

Deck, End Of Bay 1
Looking from begin to end



Photo Number: 8 Photo Filename: 12DeckEndBay1a.jp

Inspection Date: 10/10/2012 RC: 33 BIN: 1093671

Inspection Photos in Photo Number Order

Carried: 481I 481I33012078 Crossed: KIRKVILLE RD-CR53 CheckValue: 1,799,748,546

Paint



Photo Number: 9 Photo Filename: 12Paint.jpg

Paint At Begin Abutment



Photo Number: 10 Photo Filename: 12Paintbeg.jpg

Inspection Date: 10/10/2012 RC: 33 BIN: 1093671

Inspection Sketches in Sketch SysID Order

Carried: 481I 481I33012078 Crossed: KIRKVILLE RD-CR53 CheckValue: 1,799,748,546

Sketch ID: 351210936710000 Sketch Filename: LdRat.12

General Sketch for Bridge
Referenced Photos:

LOAD RATING FIELD CHECK FORM

Region 7 LoadRatingFieldCheckForm

NYSDOT BRIDGE INSPECTION REPORT			
SHEET	1	OF	1

LOAD RATING FIELD CHECK FORM

BIN:	1093671		Insp. Date:	10/09/2012

Dead Load - Note Changes since Last load Rating or state "NONE":

None.

Section Loss - Note locations and amount of loss on each girder or state "NONE":

No changes.

Additional Notes:

None.

Attachments:

None.

Team Leader: Dave Hann

Inspection Date: 10/10/2012 RC: 33 BIN: 1093671

Inspection Sketches in Sketch SysID Order

Carried: 481I 481I33012078 Crossed: KIRKVILLE RD-CR53 CheckValue: 1,799,748,546

Sketch ID: 351210936710001 Sketch Filename: BD241.12

General Sketch for Bridge
Referenced Photos:

Electrical Survey

BD 241

NYSDOT BRIDGE INSPECTION REPORT
SHEET 1 OF 1

Electrical Hazard Survey

Insp. Date:	10/09/2012		BIN:	1093671

Electrical Hazard Classification (Put an X in appropriate box at right)		
		Danger!
		Warning
	X	No Lines Present

Electrical Hazard Alignments (Put an X in all appropriate boxes at right)		
		Parallel Alignment
		Perpendicular Alignment
		Diagonal Alignment

Utility Name	
System Voltage	

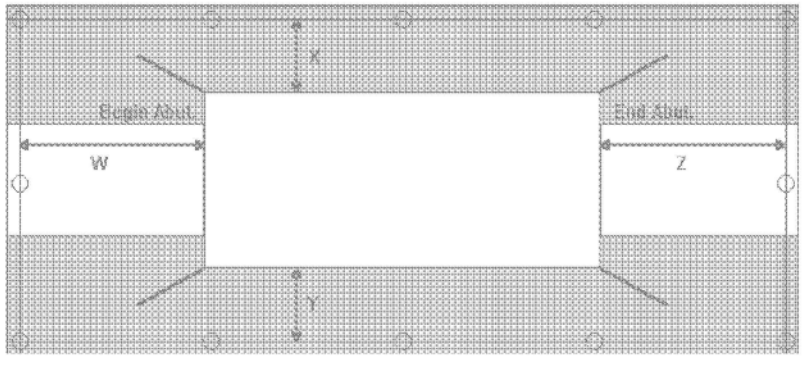

(F

or Clarity, You Must Specify English or Metric Units for Offsets)

Location (Put X where appropriate)	No Lines Present	Above the Deck	Below the Deck	Above and Below	Horizontal Offset	Vertical Offset
Before Begin Abutment (W)	X					
To Left of Bridge (X)	X					
To Right of Bridge (Y)	X					
After End Abutment (Z)	X					

Inspection Date: 10/10/2012 RC: 33 BIN: 1093671

Inspection Sketches in Sketch SysID Order

Carried: 481I 481I33012078 Crossed: KIRKVILLE RD-CR53 CheckValue: 1,799,748,546

Sketch ID: 351210936710002 Sketch Filename: Bin 1093671 - Deck sketch 2012.tif

Span 001 -- Superstructure: Structural Deck -- Rated 4, Was 5
Referenced Photos: "7", "8"

Deck sketch.

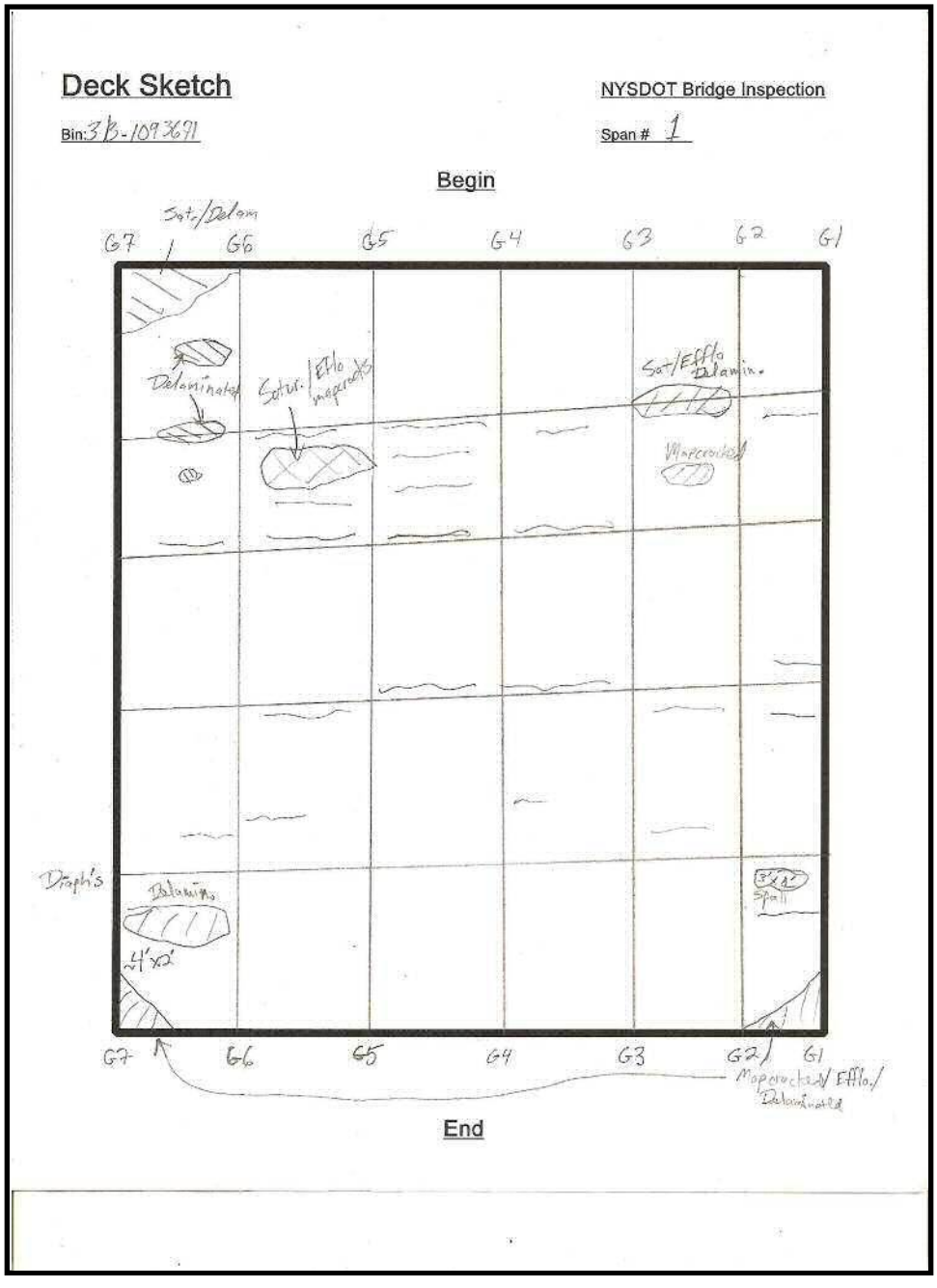

Inspection Date: 10/10/2012 RC: 33 BIN: 1093671

Gen. Rec., Postings, Federal Ratings, etc.

Carried: 481I 481I33012078 Crossed: KIRKVILLE RD-CR53 CheckValue: 1,799,748,546

Overall Condition:

GENERAL RECOMMENDATION: 5

Computed Condition Rating: 4.656

Problems Requiring Action:

NO Further Investigation Needed

NO Flags Issued

POSTINGS:

Inspector Confirmed existing Posting data as correct.
Posted Vertical Clearance ON the bridge is: No Posting
Posted Vertical Clearance UNDER the bridge is: No Posting
No Load Restriction is posted on this bridge

Overloads Observed:

NO Overload Vehicles were observed on this bridge

FEDERAL RATINGS:

NBI Deck Condition: 5
NBI Superstruct Condition: 6
NBI Substruct Condition: 6
NBI Channel Condition: N
NBI Culvert Condition: N

Diving Inspection Needs:

Diving Inspection Required? No Date of Last Diving Inspection: No Date

Inventory Problems:

Inventory Problems Exist? No

Miscellaneous:

Time Required to Inspect Bridge: 7 Hours

Lane Closure Needs: None Required

No Railroad Flagging Required

No Pedestrian Fence

There is a Snow Fence present

The BIN Plate is in DAMAGED condition

Inspection Date: 10/10/2012 RC: 33 BIN: 1093671

Gen. Rec., Postings, Federal Ratings, etc.

Carried: 481I 481I33012078 Crossed: KIRKVILLE RD-CR53 CheckValue: 1,799,748,546

Special Emphasis Inspection Required:

Non-Redundant/Fracture Critical Members - No
Pin and Hangers - No
Fatigue-Prone Welds - No
Non-Categorized Fatigue-Prone Details - No
Other (Specified in Text) - No

Special Emphasis Details:

No Special Emphasis Inspection Required.

General Notes To the Next Inspector:

Bin plate is on the begin and end stem.

There is enough room to do self-LC, with BT.

Improvements Observed:

Inspection Date: 10/10/2012 RC: 33 BIN: 1093671

Review Progress and Personnel Present at Inspection

Carried: 481I 481I33012078 Crossed: KIRKVILLE RD-CR53 CheckValue: 1,799,748,546

Inspection Submission Status:

Submitted to QC Engineer on: 11/1/2012
QC Submission Number: 553210

QC Review Completed: 11/21/2012
QC Engineer: James R. Manning

Submitted to Liaison Engineer on: 11/21/2012
Liaison Submission Number: 53238

Liaison Review Completed: 11/28/2012
Liaison Engineer: TODD M. HERMANN

Submitted for BIIS Processing on: 11/28/2012
BIIS Submission Number: .kp1

Current Status: Keypunched, Sent to BIIS
Check Value: 1,799,748,546

Personnel Present During Inspection:

David Hann - Team Leader
Steve Grabosky - Assistant Team Leader

Inspection Date: 10/10/2012 RC: 33 BIN: 1093671

Inspection Access Requirements

Carried: 481I 481I33012078 Crossed: KIRKVILLE RD-CR53 CheckValue: 1,799,748,546

Equipment Required for Inspection

No Access Requirement Changes Noted During This Inspection.
This Listing is from the Inventory Database.

ACCESS CATEGORIES FOR ENTIRE BRIDGE
Required: Walking, Extension Ladder, Small Lift, Shadow Vehicle

ACCESS CATEGORIES FOR SPAN 1
Required: Walking, Extension Ladder, Small Lift, Shadow Vehicle

Inspection Date: 10/10/2012 RC: 33 BIN: 1093671

Culvert Measurements

Carried: 481I 481I33012078 Crossed: KIRKVILLE RD-CR53 CheckValue: 1,799,748,546

Culvert Measurements

NO CULVERT DATA FOR BIN 1093671

Standard Photos **RC: 33 BIN: 1093671**

Carried: 481I 481I33012078 Crossed: KIRKVILLE RD-CR53

1093671_LOCATION_MAP.JPG

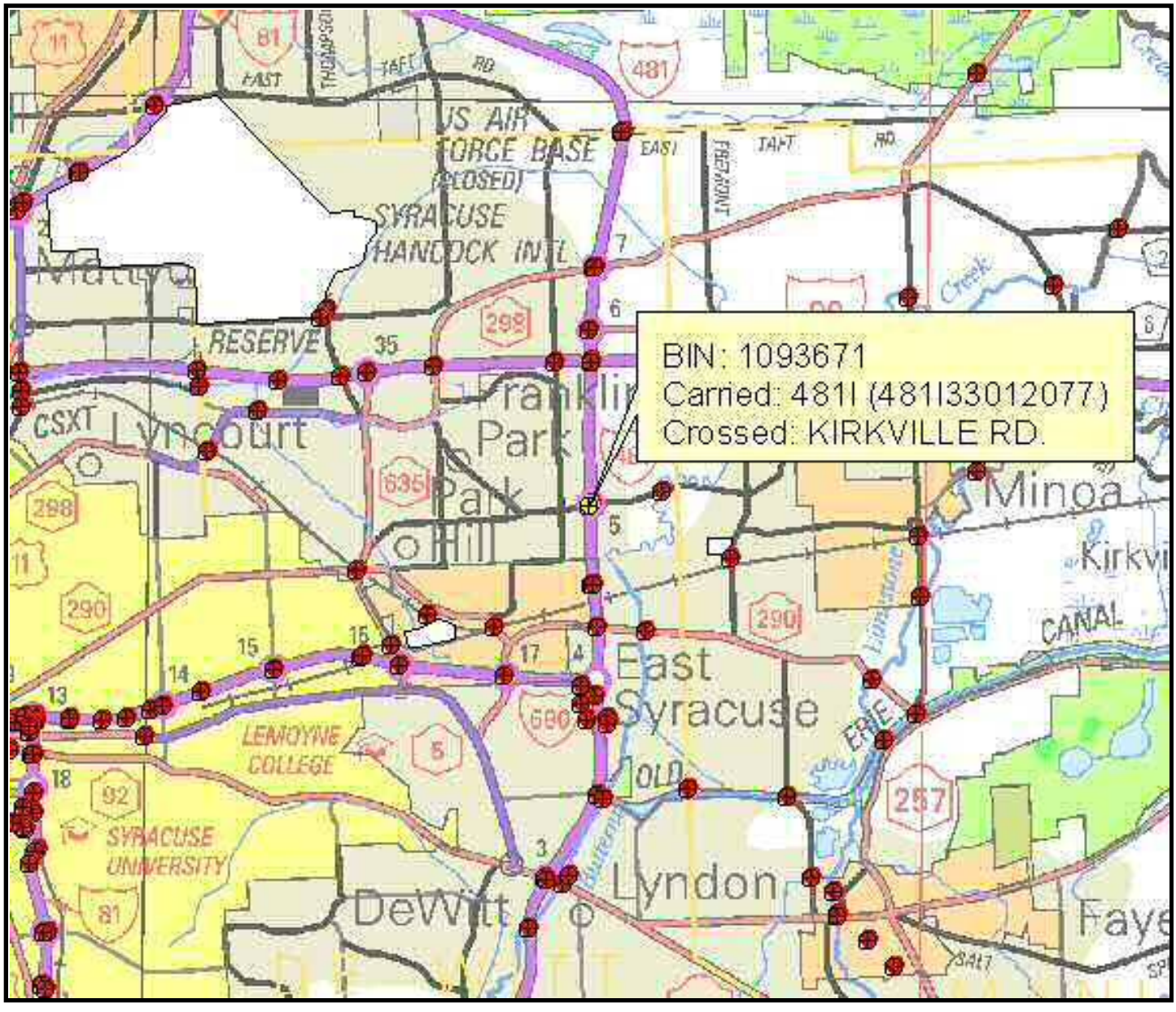

Standard Photos **RC: 33 BIN: 1093671**

Carried: 481I 481I33012078 Crossed: KIRKVILLE RD-CR53

1093671_QUAD_MAP.JPG

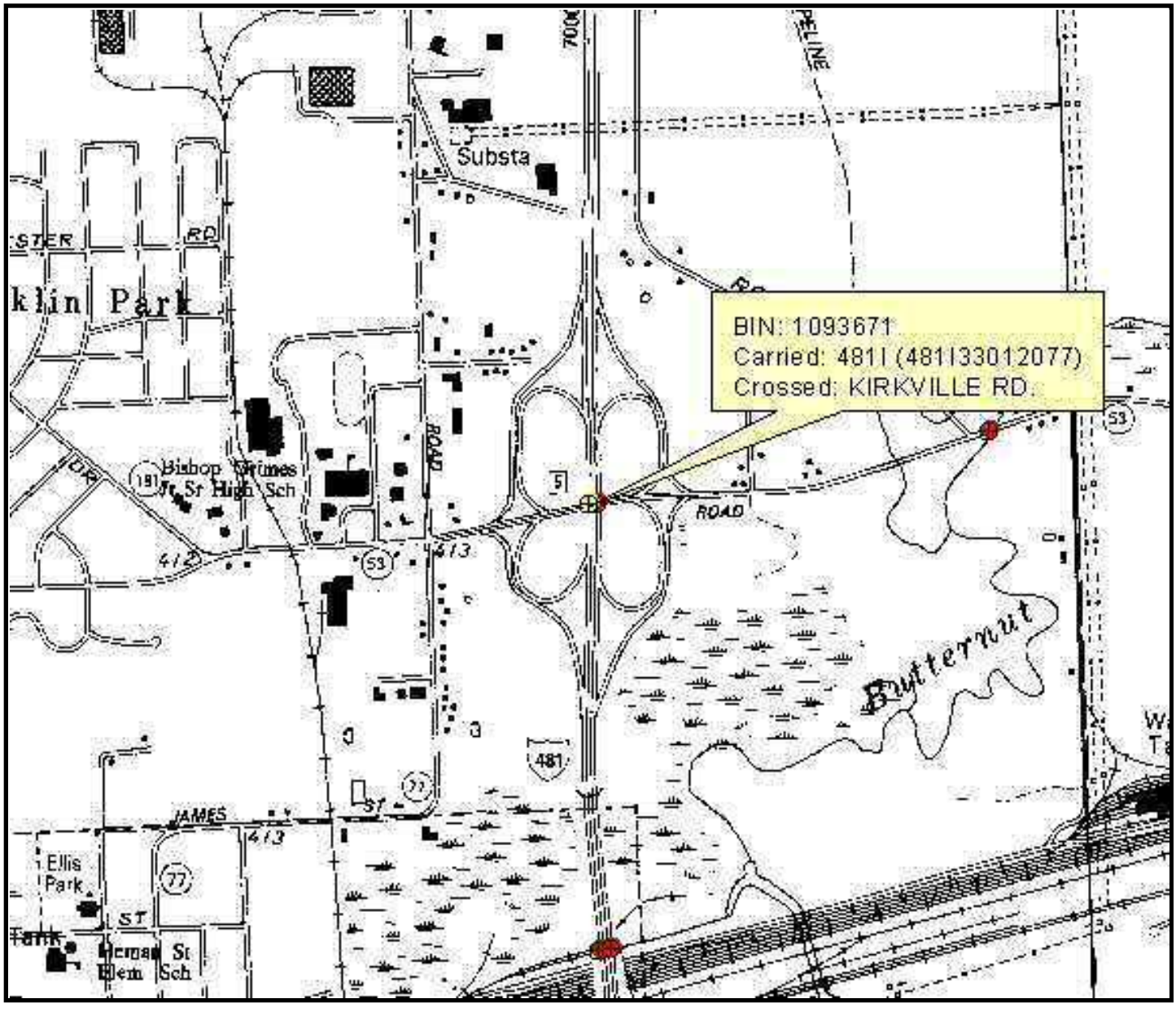

Standard Photos **RC: 33 BIN: 1093671**

Carried: 481I 481I33012078 Crossed: KIRKVILLE RD-CR53

BeginAbutment12.jpg



Standard Photos **RC: 33 BIN: 1093671**

Carried: 481I 481I33012078 Crossed: KIRKVILLE RD-CR53

BeginApproach12.jpg



Standard Photos **RC: 33 BIN: 1093671**

Carried: 481I 481I33012078 **Crossed: KIRKVILLE RD-CR53**

EndApproach12.jpg



EndRightWingwall12.jpg



Standard Photos **RC: 33 BIN: 1093671**

Carried: 481I 481I33012078 Crossed: KIRKVILLE RD-CR53

F2Left12.jpg



Standard Photos **RC: 33 BIN: 1093671**

Carried: 481I 481I33012078 Crossed: KIRKVILLE RD-CR53

F2Right12.jpg



Standard Photos **RC: 33 BIN: 1093671**

Carried: 481I 481I33012078 Crossed: KIRKVILLE RD-CR53

LeftElevation12.jpg



Standard Photos **RC: 33 BIN: 1093671**

Carried: 481I 481I33012078 Crossed: KIRKVILLE RD-CR53

Underside12.jpg

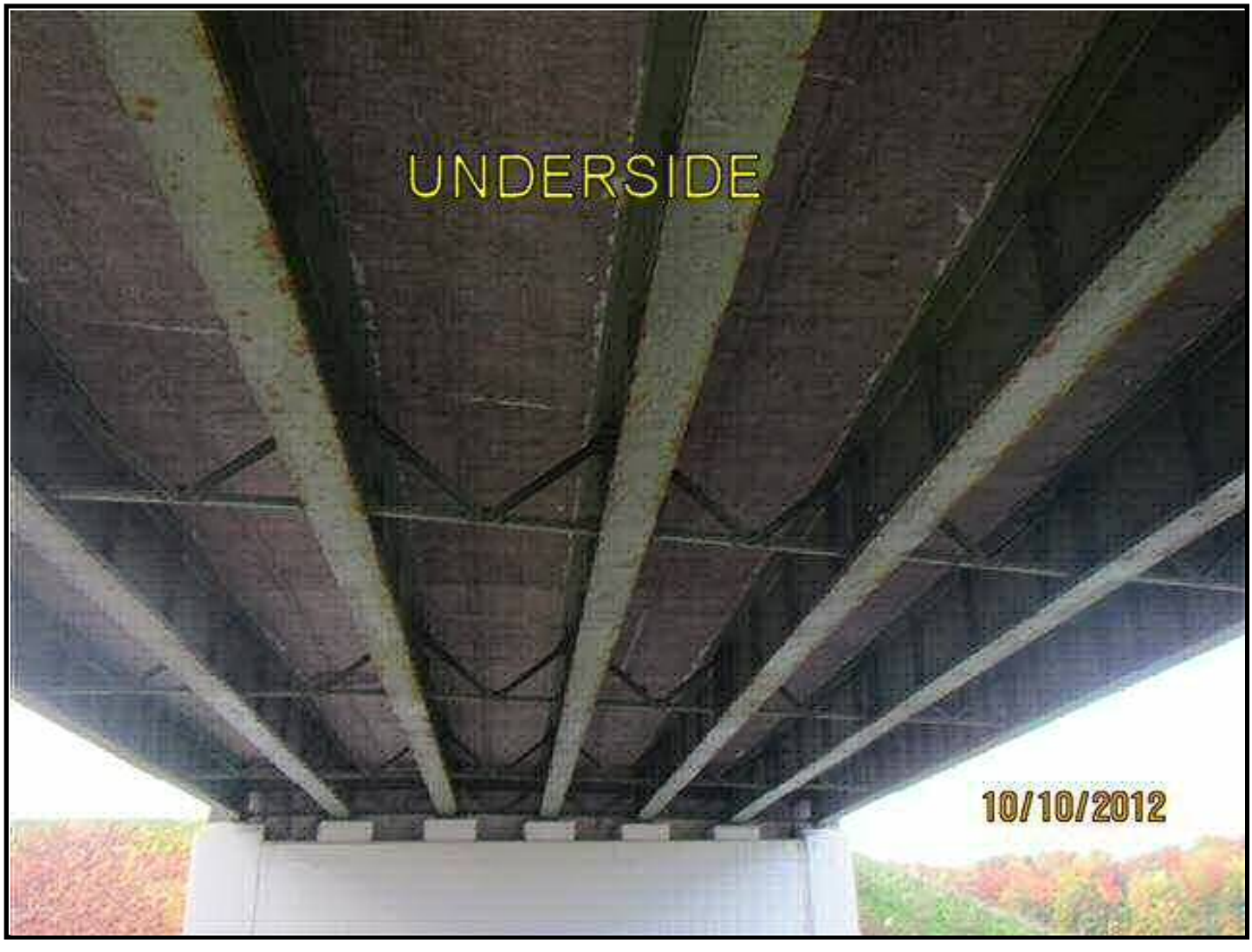

LEVEL 1 LOAD RATING SUMMARY SHEET

Region/County Region 3/Onondaga BIN 1093671
Feature(s) Carried and Crossed I-481 Southbound/Kirkville Road
Date of field inspection upon which Level 1 rating is based 1/8/2014

OVERALL BRIDGE RATTNGS (BASED ON LOWEST RATED ELEMENTS):

Total number of rating units 1

	H inventory	H operating	HS inventory	HS operating
Rating	H 34.09 (tons)	H 56.92 (tons)	HS 53.64 (tons)	HS 89.58 (tons)
Lowest rated element	Interior Girders G2, G3, G4, G5, G6	Interior Girders G2, G3, G4, G5, G6	Interior Girders G2, G3, G4, G5, G6	Interior Girders G2, G3, G4, G5, G6

Analysis method LFR Comments

Individual Rating Unit Level 1 values:

Rating unit span(s) 1

Main member ratings

	H inventory	H operating	HS inventory	HS operating
Rating	H (tons)	H (tons)	HS (tons)	HS (tons)
Lowest rated element				

Analysis method Comments

Floorbeam ratings

	H inventory	H operating	HS inventory	HS operating
Rating	H (tons)	H (tons)	HS (tons)	HS (tons)
Lowest rated element				

Analysis method Comments

Stringer ratings

	H inventory	H operating	HS inventory	HS operating
Rating	H 34.09 (tons)	H 56.92 (tons)	HS 53.64 (tons)	HS 89.58 (tons)
Lowest rated element	Interior Girders G2, G3, G4, G5, G6	Interior Girders G2, G3, G4, G5, G6	Interior Girders G2, G3, G4, G5, G6	Interior Girders G2, G3, G4, G5, G6

Analysis method LFR Comments

Certified by Date

Quality Control Engineer Signature Date
Agency or Company represented by certifier

Note:
-If connection ratings govern, record them under stringer ratings for stringer – floorbeam connection, floorbeam ratings for floorbeam-main member connections, etc.
-When Level 1 results indicated the need for load posting or other corrective action, the NYSDOT Regional Structures Engineer shall be notified immediately.
-Load ratings should be filed in the regional office within 60 days of completion of calculations.
-Bridges shall be flagged based on Level I results in accordance with the current NYSDOT flagging procedure.
-Bridge load posting, closure, etc. determinations shall be made as results are being produced.

PARSONS

100 Broadway
New York, NY 10005
Phone: 212-266-8300
Fax: 212-571-6825
www.parsons.com

TECHNICAL MEMORANDUM

FROM: Kian Siang Chau, P.E
NYSPE 082744

DATE: MARCH 19, 2014

RE: SEISMIC SCREENING SUMMARY
NEW YORK STATE DEPARTMENT OF TRANSPORTATION
D031085; PIN 3501.60; I-81

BIN: 1093671 (I-481 SB/Kirkville Rd)

This memorandum summarizes the seismic screening conducted for BIN 1093671 as part of the Interstate 81 Project in Syracuse, NY. The purpose of the screening is to determine if seismic retrofits are warranted at the superstructure to substructure connection, and if further seismic evaluation of the structure is required. This memorandum will give the screening results, retrofits required and recommendations for further seismic evaluation of the structure.

SCREENING PROCEDURE

The seismic screening was performed in accordance with the FHWA Seismic Retrofitting Manual for Highway Structures: Part 1 - Bridges, January 2006. As per the referenced manual, seismic screenings were performed for both lower level and upper level earthquake ground motion. The lower level earthquake ground motion has a reasonable likelihood of occurrence within the life of the bridge (50% probability of exceedance within a 75 year bridge life). The upper level earthquake ground motion has a finite likelihood of occurrence within the life of the bridge (7% probability of exceedance within a 75 year bridge life).

Values for the spectral acceleration for the Syracuse area used in the screening are as follows:

- Lower Level Earthquake Ground Motion for a Short Period (0.2 seconds): $S_S = 0.0251$
- Lower Level Earthquake Ground Motion for a Long Period (1.0 seconds): $S_1 = 0.0076$
- Upper Level Earthquake Ground Motion for a Short Period (0.2 seconds): $S_S = 0.139$
- Upper Level Earthquake Ground Motion for a Long Period (1.0 seconds): $S_1 = 0.047$

These values are considered constant and are the same for all seismic screenings of bridges in the Syracuse area.

The Site Class is based on the soil conditions at the bridge location. It was determined that this parameter has little effect on the results of the seismic screening because the spectral acceleration values for the Syracuse area are small. Based on this, a site class of D was used for all seismic screenings of bridges in the Syracuse area.

Bridge parameters used in the seismic screening were retrieved from the record drawings and WinBolts data.

The seismic screening takes into account the anticipated service life, importance, and the seismic exposure of the bridge to determine a seismic retrofit category (SRC). The SRC is then used to determine seismic evaluation methods and retrofit measures. There are four SRCs, A through D. Seismic retrofit category A is the lowest category; bridges in this category do not require retrofits or further seismic evaluation. Seismic retrofit category D is the highest category; bridges in this category requiring the most rigorous seismic evaluations and retrofits.

SCREENING RESULTS

The SRC for the bridge is "**C**" for lower level earthquake ground motion and "**B**" for upper level earthquake ground motion.

RETROFITS REQUIRED

No seismic retrofits are required for the bridge superstructure to substructure connection.

RECOMMENDATIONS FOR FURTHER SEISMIC EVALUATION

For the lower level earthquake ground motion, it is recommended that capacity/demand ratios for bridge components are calculated as per Section 5.4 of the referenced manual. For the upper level earthquake ground motion, it is recommended that the capacities of the bearings are checked as per Section 5.2 of the referenced manual.

Retrofit cost estimates will be provided after any further required seismic evaluations are completed.

BRIDGE DECK EVALUATION REPORT

RECOMMENDATIONS

The bridge deck inspection findings and evaluation are used as a tool for developing the scope of work and cost estimates for the development and comparison of alternatives for the overall project.

The total damaged area of the deck is 1.0% of the top and 2.6% of the underside of the deck area. The cores indicate the reinforcement steel is 3.0 to 4.0 inches below the surface of the deck. The lab test indicates that chloride ion concentrations at two of the sample locations are significantly higher than the corrosion threshold for steel, the third sample location was equal to the threshold value.

Due to the age, condition and high chloride ion content of the bridge deck concrete, the bridge deck should be rehabilitated or replaced to meet the current standards and to mitigate excessive future maintenance costs.

ALTERNATIVES

- Rehabilitation Alternative - 2 inches Bonded Concrete Overlay
  - Scope

    The scope of this alternative will include the complete removal of the bridge railings, curb and safety walks, and fascias to the level of the original top of the deck. The lower portion of the fascia or deck soffit is in better condition and only partial removal of damaged areas is necessary. The joint will be removed. The top 2 inches of the entire deck will be removed and areas of deteriorated concrete must be removed to at least 1 inch below the level of the reinforcement steel and to the horizontal and vertical limit of any detectable hollow areas. Damaged areas at the underside of the deck will require full depth reconstruction. Any corrosion of the reinforcement steel will be sandblasted or hydro-blasted. Reinforcement with significant section loss will be replaced. Partial and full depth removal areas will be reconstructed to adjacent grade. The proposed deck overlay will be a 2 inches thick bonded concrete overlay yielding a nominal 9.5 inches standard thickness deck. A new single-sloped concrete barrier and a new armorless joint will be installed. The Level 1 Load Rating for the final condition was found to be acceptable.

- Useful Life Expectancy

  The removal of the top 2 inches of the existing deck will remove the portion of the deck with high chloride ion concentrations. It can be anticipated that chloride ions will continue to migrate into the remaining deck to the reinforcing steel resulting in further corrosion-related deterioration of the deck surface. Concrete admixtures will be included in the bonded concrete overlay to impede the continued penetration of chloride into the deck from the surface. This alternative will result in an extended useful life expectancy estimated at 20 years.

The design life of the project is 30 years (ETC + 30). This alternative does not meet the project objectives of obtaining 30 years of service life and is not evaluated further.

- Rehabilitation Alternative – 100% Deep Removal and Partial Deck Reconstruction
  - Scope

    The scope of this alternative will include the complete removal of the bridge railings, curb and safety walks, and fascias to the level of the original top of the deck. The lower portion of the fascia or deck soffit is in better condition and only partial removal of damaged areas is necessary. The joint will be removed. The scope of this alternative will include partial depth reconstruction with removal of the concrete to at least 1 inch below the top mat of the reinforcement steel. Additionally, any further areas of deteriorated concrete detected will require full depth removal. Any corrosion of the reinforcement steel will be removed by sandblasting or hydro-blasting. The proposed deck partial reconstruction will be a nominal 6 inches thick concrete deck yielding a 9.5 inches standard thickness deck. A new single-sloped concrete barrier and a new armorless joint will be installed. The Level 1 Load Rating for the final condition was found to be acceptable.
  - Useful Life Expectancy

    This alternative will provide a useful life expectancy is estimated at 35 years.
  - Cost Estimate

    The estimated cost for this alternative is $565,000. The Engineer's Opinion of Probable Construction Cost worksheet is at the end of this section.

- Replacement Alternative – Cast-In-Place Concrete
  - Scope

    This scope of this alternative will include the complete demolition of the existing bridge deck, railings, curb and safety walks, fascias and bridge joint. The bridge deck will be replaced with a new 9.5 inches standard thickness concrete deck. A new single-sloped concrete barrier and a new armorless joint will be installed. The Level 1 Load Rating for the final condition was found to be acceptable.
  - Useful Life Expectancy

    This alternative will provide a useful life expectancy is estimated at 40+ years.
  - Cost Estimate

    The estimated cost for this alternative is $649,000. The Engineer's Opinion of Probable Construction Cost worksheet is at the end of this section.

- Replacement Alternative – Pre-cast Concrete Deck Panels
  - Scope

    The scope of this alternative is similar to the Cast-In-Place Concrete Deck Replacement Alternative except the deck structure will be precast panels. This alternative offers reduced construction time over conventional construction.
  - Useful Life Expectancy

    This alternative will provide a useful life expectancy is estimated at 40+ years.
  - Cost Estimate

    The comparison of accelerated construction to conventional construction is beyond the current scope of this evaluation.

IN-DEPTH INSPECTION REPORT

D031085 P.I.N. 3501.60

ELEMENT SPECIFIC BRIDGE WORK

B.I.N. 3/3 1093672

TEAM LEADER George H Stam, P.E. 056216
NYSPE LICENSE #

ASSISTANT TEAM LEADER Timothy Olmstead

FEATURE CARRIED I-481 Northbound

FEATURE CROSSED Kirkville Road

DATE FIELD WORK BEGAN 1/6/14

DATE FIELD WORK COMPLETED 1/8/14

TABLE OF CONTENTS

- STRUCTURE IDENTIFICATION
- INTRODUCTION
- PROJECT LOCATION MAP
- IN DEPTH CONDITION DOCUMENTATION
- PLANS & SKETCHES
- IN DEPTH PHOTO DOCUMENTATION
- ASBESTOS SAMPLING SURVEY
- LATEST BIENNIAL INSPECTION REPORT
- STANDARD PHOTOS

STRUCTURE IDENTIFICATION

a. Bridge Identification Number (BIN): 3/3 1093672
b. Reference Marker: 481I 3301 2078
c. Region: NYSDOT Region 3
d. County: Onondaga
e. Town: Dewitt
f. Feature Carried: I-481 Northbound
g. Feature Crossed: Kirkville Rd. – CR53

INTRODUCTION

a. Bridge History
   i. Year Built: 1972
   ii. Bridge Type: Single Span, Steel Multi-girder
   iii. Span Length: 113 feet – 6 inches
   iv. Out-to-Out Width: 55 feet
   v. Structural Ratings and Rankings
      1. Federal Sufficiency: Update not available
      2. Condition Rating: Update not available
      3. General Recommendation: Update not available
   vi. Live Load Posting (HS25): No
   vii. National Highway System (NHS): Yes
   viii. Previous work Done:

1987 – Replace wearing surface (asphalt concrete overlay) with concrete overlay
1992 – Clean and paint metal surfaces
1998 – Asbestos testing
1999 – Waterproofing bridge deck and corrosion inhibitor
2006 – Repair structural bridge deck
2008 – Repair structural bridge deck
2012 – Structural deck replacement

   ix. Planned Future Work: N/A

b. Highway Classification

i. Functional Classification: Urban Principle Arterial - Interstate

ii. Traffic Volumes

YEAR	AADT
2014	25226
2034	37485
2054	55700

iii. Plan for Maintenance and Protection of Traffic:
Maintenance and protection of traffic will be achieved by staged construction.

PROJECT LOCATION MAP



IN-DEPTH CONDITION DOCUMENTATION

NYS DEPT. OF TRANSPORTATION
BRIDGE INSPECTION REPORT **BIN:** 1093672

SHEET: 1 **OF** 5
DATE: 1/6/2014 & 1/8/2014

FEATURE CARRIED: I-481 NB
FEATURE CROSSED: KIRKVILLE RD

TEAM LEADER: G. STAM
ASSIST. TEAM LEADER: T. OLMSTEAD

ITEM	REMARKS	PHOTO NO.
	GENERAL NOTE The entire bridge deck was replaced in 2012 with new precast deck panels. There are no joints at either approach of the bridge and the deck is continuous with the new precast concrete approach panels at the begin and end approaches (Photo 1). There is a sleeper slab at the end of the end approach slab (Photo 2). The deck element curbs, safety walks, and railings and fascias were replaced with precast integral single slope parapets.	1,2
	BEGIN ABUTMENT ITEMS	
TP 349-22	Begin Abutment - Joint with Deck: There is a new jointless precast approach slab (Photo 3).	3
TP 349-24	Begin Abutment – Bearings: The begin bearings are fixed. All of the bearings have pack rust between the rocker and the masonry plate that restricts movement. The fascia bearings G1 and G7 are the worst (Photo 4). The bearing at G5 has a substantial deposit of guano increasing the corrosive environment at the bearing (Photo 5).	4,5
TP 349-26	Begin Abutment - Seat and Pedestals: The seat is cracked 4 feet long along the front right edge in bay 2 and in front of pedestal 3 (Photo 6). The crack wraps down the stem at this location. The seat is otherwise in generally good condition. The pedestals are in generally good condition with no significant cracks or any hollow areas detected. The left face of pedestals P1 has minor tight mapcracking and the bottom has surface scaling up to 0.5 inch deep, but no hollow sounding concrete (Photo 7).	6,7
TP 349-28	Begin Abutment – Backwall: There is a new jointless precast approach slab with an integral backwall haunch detail. The original backwall below the haunch is in generally good condition. There is a full height crack at the right side of bay 2 (Photo 8).	8
TP 349-30	Begin Abutment – Stem: The stem has been repaired with several patched areas as illustrated on the Begin Abutment Deterioration Sketch. Generally, the stem has tight mapcracking throughout. The top of the stem beneath the right side of bay 2 is cracked and there is a 3 square foot delaminated area with a 1 square foot spall (Photo 9). There is a horizontal crack with efflorescence and staining at the top right side beneath bay 6 (Photo 10). No other hollow areas or significant cracks were detected.	9,10
TP 349-32	Begin Abutment – Erosion: The paving block slope protection at the left side is deteriorated with settled and deteriorated blocks over a 20 square foot area (Photo 11).	11

ITEM	REMARKS	PHOTO NO.
	END ABUTMENT ITEMS	
TP 349-23	End Abutment - Joint with Deck: The end bearings are expansion. There is a jointless precast approach slab (Photo 12) with a sleeper slab at the end of the end approach slab.	12
TP 349-25	End Abutment – Bearings: The end bearings are expansion. All of the bearings are slightly extended at 20 ºF. The bearing at G7 is the worst with the end of the sole plate overhanging the back edge of the masonry plate by +/- 1/8 inch (Photo 13).	13
TP 349-27	End Abutment - Seats and Pedestals: The seat is generally in good condition with no hollow areas or significant cracks detected. The top on the right side of pedestal 7 has a one square foot area of surface spalling up to 1.25 inch deep (Photo 14).	14
TP 349-29	End Abutment – Backwall: There is a jointless precast approach slab with an integral backwall haunch detail (Photo 15). The bottom of the precast haunch is impinging on the top of the original backwall. The expansion and contraction movement of the deck and end approach slab above the original backwall is not adequately accommodated and portions of the old backwall are cracked, delaminated and spalled in bay 4 (Photos 16 & 17) and bay 6 (Photo 18) as illustrated on the End Abutment Deterioration Sketch. Additionally, there is 0.5 square foot of spalling and vertical cracking with 4 square feet of surface scaling at the end right (Photo 19).	15,16,17 18,19
TP 349-31	End Abutment – Stem: The stem has been repaired with several patched areas as illustrated on the End Abutment Deterioration Sketch. Generally, the stem has tight mapcracking throughout (Photo 20). Additionally, there are scattered vertical cracks and a 2 square foot hollow sounding area at the top near bay 6.	20
TP 349-33	End Abutment – Erosion: The paving block slope protection at the left side is deteriorated with settled and deteriorated blocks over 30 square foot area mostly toward the left side (Photo 21).	21
	APPROACH ITEMS	
TP 349-53	Approach Drainage: There are no drainage problems on the bridge.	
TP 349-55	Approach Settlement: There is no settlement at either approach.	
TP 349-57	Approach Pavement: There are new precast concrete approach slabs. There is a sleeper slab at the end of the end approach slab.	

ITEM	REMARKS	PHOTO NO.
	DECK ITEMS	
TP 350-19	Deck - Wearing Surface: The ride quality of the deck is smooth.	
TP 350-20	Deck - Curbs: There are no curbs on the bridge.	
TP 350-21	Deck - Sidewalks and Fascias: Sidewalks – There are no sidewalks or safety walks on the bridge. Fascias – Fascias – There are new precast concrete single slope parapets integral with the deck on either side of the bridge (Photos 1 & 22).	1,22
TP 350-22	Deck - Railings: There are no railings on the bridge.	
	SUPERSTRUCTURE ITEMS	
TP 350-27	Structual Deck: The structural deck is comprised of precast concrete deck panels (Photo 1).	1
	Fascia panels – There are 5 integral single slope parapet panels 22 feet - 4.25 inches long x 11 feet - 1 inch wide on either side. Interior panels – There are 10 interior panels 31 feet – 2 inch wide x 10 feet – 10.625 inches long. There are 10 inches wide closure pours evident between the fascia panels and the interior panels; and the remaining closure pours are 7 inches wide. There are scattered tight shrinkage cracks in the closure pours, mostly longitudinal along the lengths of the closures. (Photo 23).	23
	There are scattered diagonal, longitudinal and transverse cracks in the precast deck panels (Photos 3 & 24; and 16 & 25) that are illustrated in the Top of Deck Deterioration and Under Side of Deck Deterioration Sketches. Most of the deck panel cracks are sealed with epoxy crack sealant (Photo 26).	3,24 16,25 26
TP 350-28	Primary Members: Good condition; surface rusting where the paint has peeled or blistered (Photo 27). No significant section loss.	27
TP 350-29	Secondary Members: Good condition; surface rusting where the paint has peeled or blistered. No significant section loss.	
TP 350-30	Paint: The paint system is failed on less than 5% of the surfaces of the girders and diaphragms. There is cracking and peeling of the paint on the bottom flanges (Photos 27 & 28). The outside webs of the fascia girders G1 and G7 have scattered blistering and peeling paint (Photos 29). There is surface rusting where the paint has peeled or blistered.	27,28,29

ITEM	REMARKS	PHOTO NO.
	UTILITIES ITEMS	
TP 350-43	Lighting: None.	
TP 350-44	Sign Structure: None.	
TP 350-45	Utilities and Support: None visible.	

ITEM	REMARKS	PHOTO NO.
	SPECIAL EMPHASIS ITEMS Special Emphasis Inspection Required · Non-Redundant/Fracture Critical Members – No · Pin and Hangers – No · Fatigue-Prone Welds – No · Non-Categorized Fatigue-Prone Details – No · Other – No Special Emphasis Details · No Special emphasis details.	

PLANS & SKETCHES

F.I.S.H

BIN 1093672
TEAM LEADER - P. RIEHLMAN
DATE - 7-27-87
✓ Richard B. Engle (TE) 11-20-88

FED. RD. REG. NO.	STATE	FEDERAL PROJECT AID NO.	SH
1	NEW YORK	I-481-2(11)6	2

INTERSTATE ROUTE CONNECTION
BUTTERNUT INTERCHANGE - CULL
ONONDAGA COUNTY

Opalka Winsor B30/188 P.S.R. 20

✓ Douglas B. Hellegers 11/1
11/01/04

1093672

RJR 11/3/10

ESTIMATE OF QUANTITIES

ITEM	DESCRIPTION	UNIT	BRIDGE NO. 3S NEAT	BRIDGE NO. 3S PROP'L		BRIDGE NEAT	BRIDGE PR
203 A	Selected Granular Fill	C.Y.	7832	7835		7832	7
216 F	Underdrain Filter	C.Y.	17	20		17	
5 B	Structure Excavation	C.Y.	488	490		540	
11 H G	Perforated Corr. Metal Underdrain 6" ø 18ga	L.F.	232	295		288	
18	Class A - Concrete for Structures	C.Y.	19	20		19	
18 M A	Class A - Concrete for Struct (Mono Bdy. St)	S.F.	6309	6310		6309	6
20	Class B - Concrete for Structures	C.Y.	1212	1215		1186	
24 A	Bagged Screened Aggregate	C.Y.	160	160		160	
28	Bar Reinforcement for Structures	Lb.	106939	106940		106252	10
28 B	Stud Shear Connectors	Ea.	2394	2400		2394	2
29	Structural Steel	Lb.	250243	250245		250243	25
375 (2)	Steel Bridge Railing (2 Rail)	L.F.	412	415		412	
61	Bituminous Material	Gal.	252	255		246	
796	Concrete Block Paving	S.Y.	117	120		117	
845 B	Steel Bearing Test Piles	L.F.	90	90		90	
85	Steel Bearing Piles	L.F.	5320	5320		5240	5
85 A	Splices for Steel Bearing Piles	Ea	44	45		44	
87	Furnishing Equip. For Driving Piles	L.S.	Nec.	Nec.		Nec.	
945 BV	Stone Curb (Bridge Types) Granite	L.F.	590	590		585	
124	Sodding	S.Y.	119	120		119	
363 I	Epoxy Protective Coating for Conc	S.F.	900	900		900	
IWP 5	Watering Plants and Sod	M Gal	2.4	4.0		2.4	

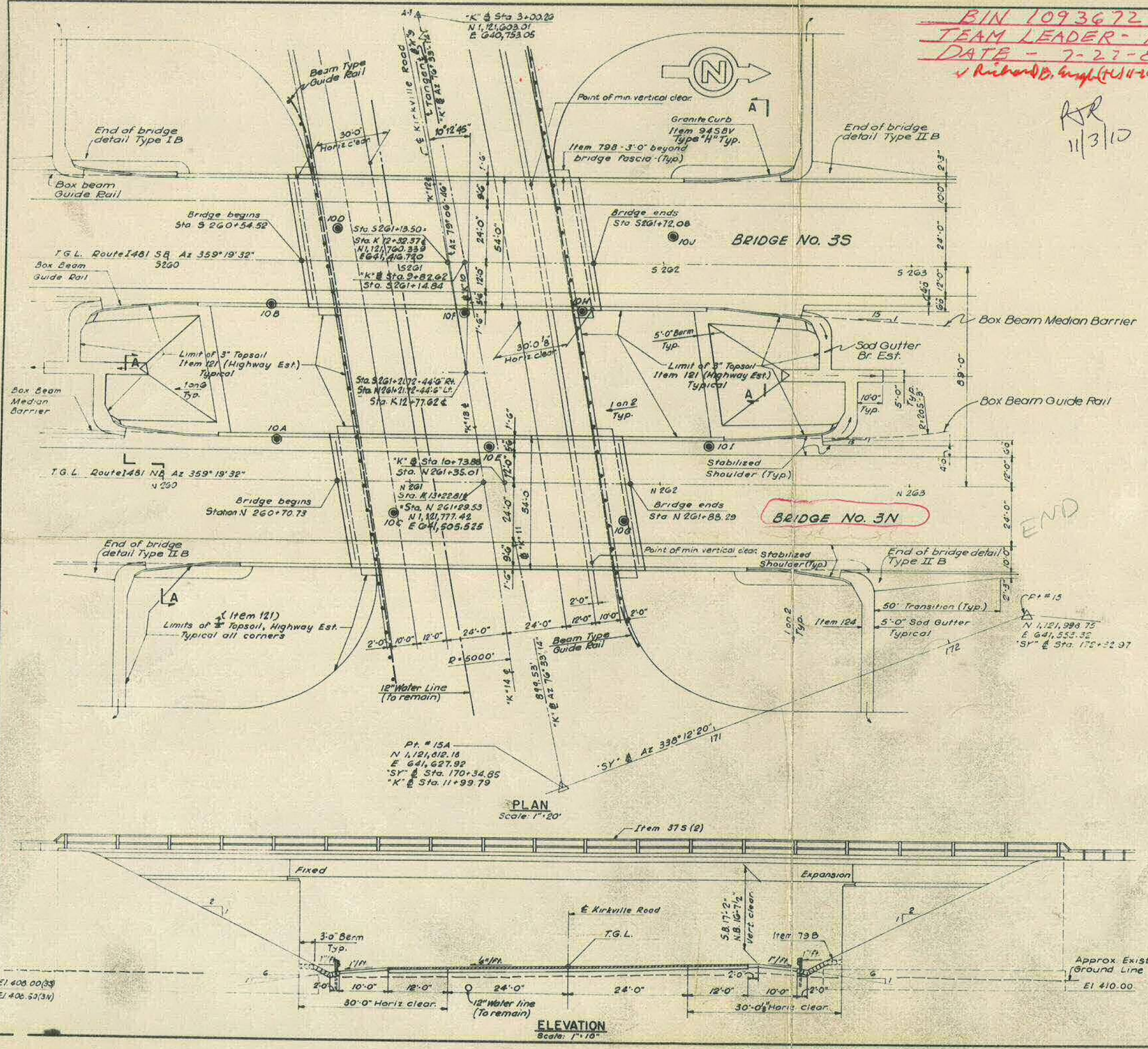

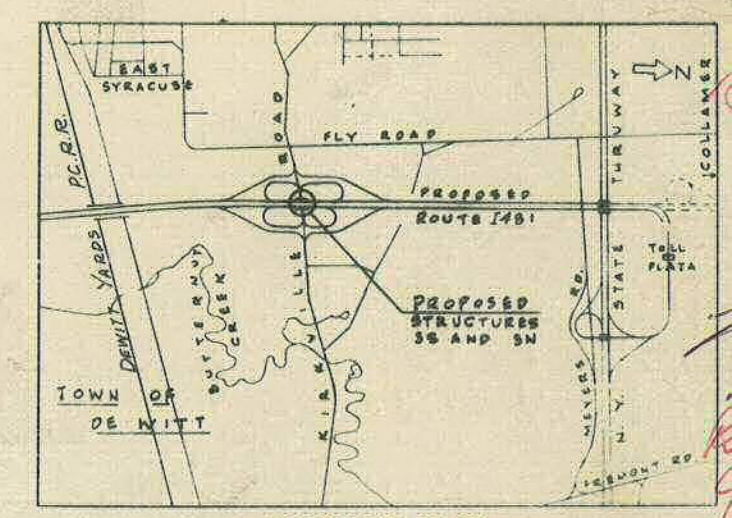

LOCATION PLAN
Scale 1"=2000'

DJH

As Built Revision
4" Topsoil depth

NOTES:
1. For General Notes see Sheet No. 124
2. For foundation treatment see Sheet No. 231
3. For Curbing and Drainage Details at end of bridges see Sheet No. 127 & 128
◉ Indicates location of borings
4. For Section A-A see Sheet No. 230
5. The structural slab on this structure shall be formed with removable forms

F.A.I. 481 BIN 10 BIN 10

BRIDGE NO. 3S & 3N
RTE I481 OVER KIRKVILLE
GENERAL PLAN - SHEET

DRAWING NO.	SCALE	DATE
9093-03	As Shown	8/15/70

LOCKWOOD, KESSLER & BARTLE
CONSULTING ENGINEERS – SYOSSET,

In Charge of: J. Eaton
Made By: J. Cossi
Traced By: C.O.S.S.
Checked By: A. Sampsidis

F.I.S.H. 70

FED. RD. REG. NO.	STATE	FEDERAL PROJECT AID NO.	SHEET NO.
I	NEW YORK	I-890-3(23) I-481-2(16)	232

INTERSTATE ROUTE CONNECTION 5

BUTTERNUT INTERCHANGE - COLLAM
ONONDAGA COUNTY

1093672

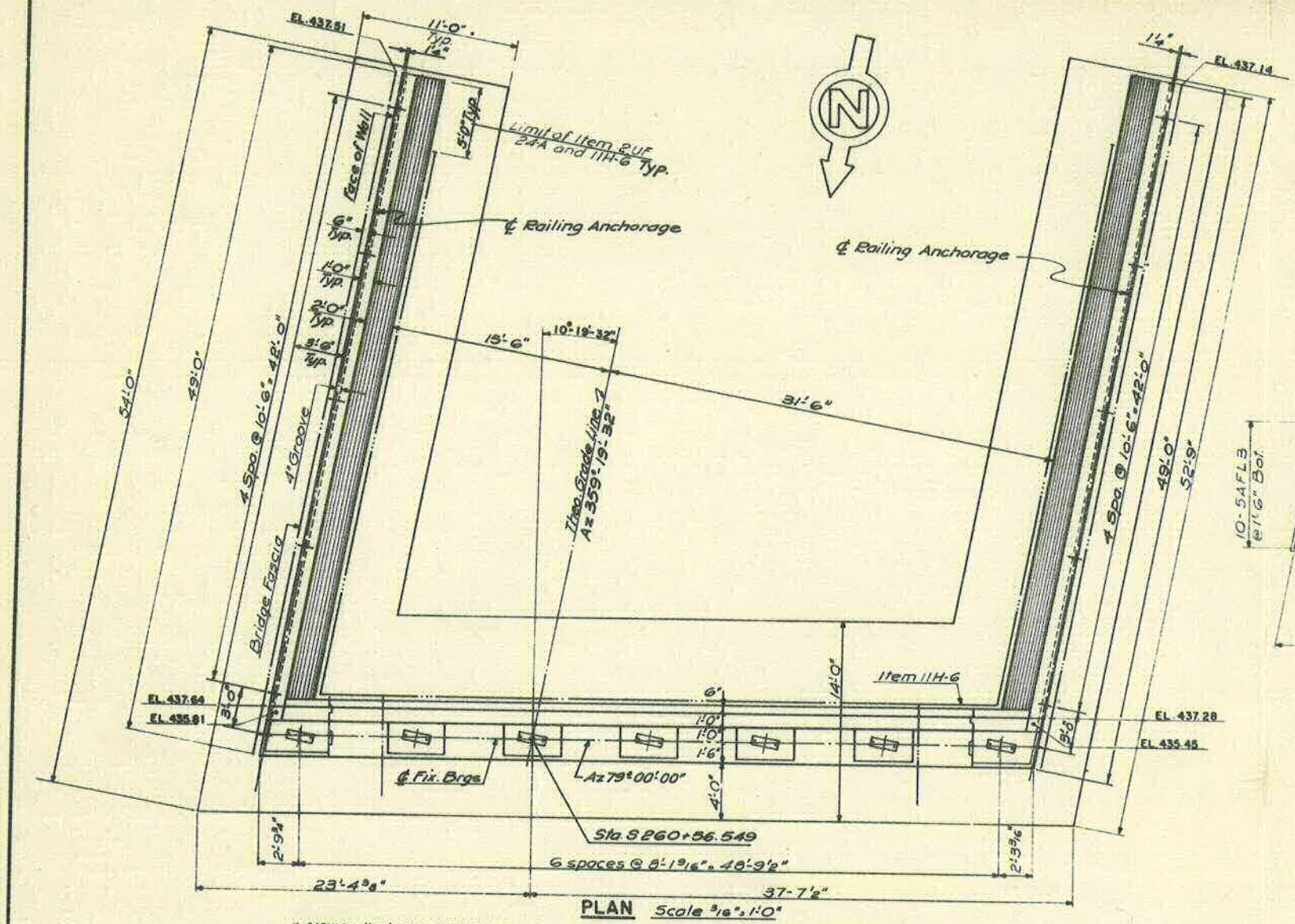

PLAN Scale 3/16" = 1'-0"

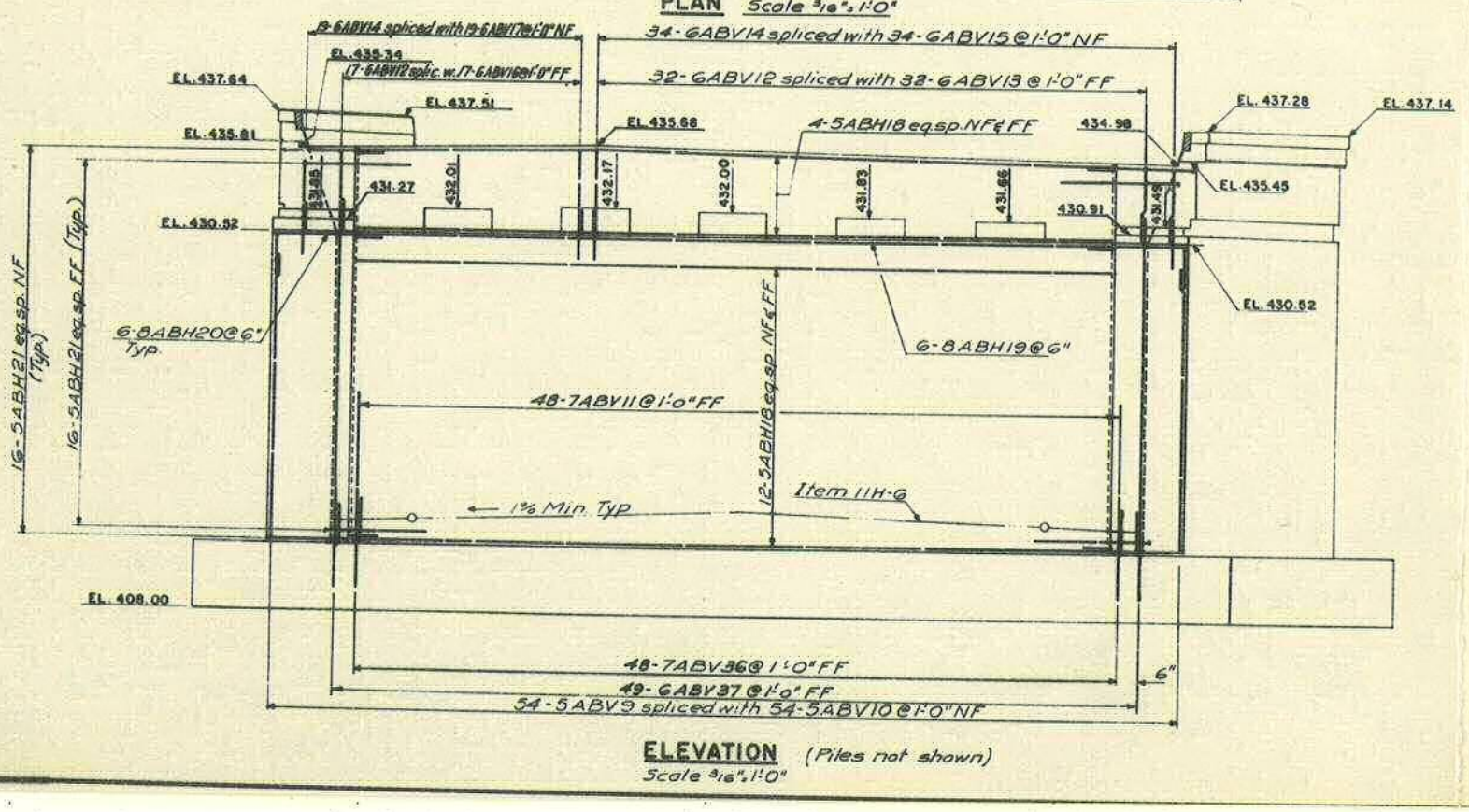

ELEVATION (Piles not shown)
Scale 3/16" = 1'-0"

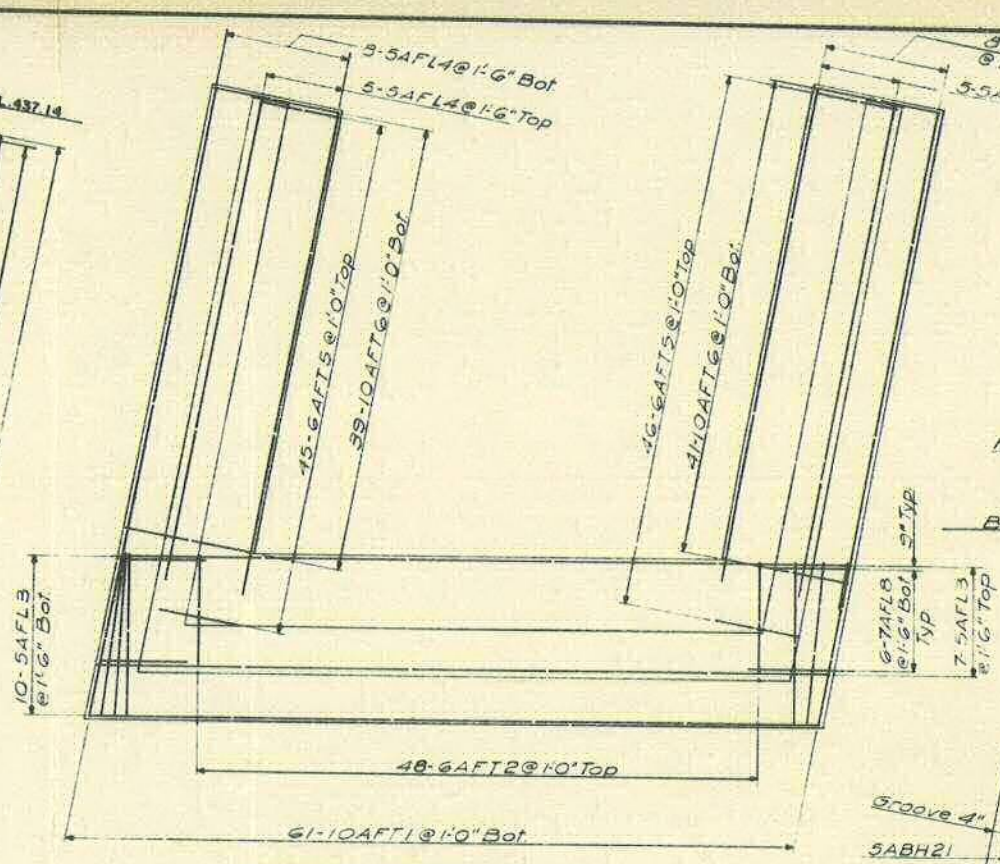

FOOTING REINFORCEMENT
Scale ⅜" = 1'-0"

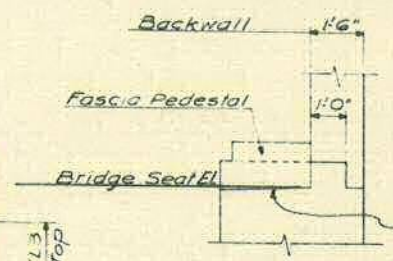

SECTION A-A
Scale ⅜" = 1'-0"

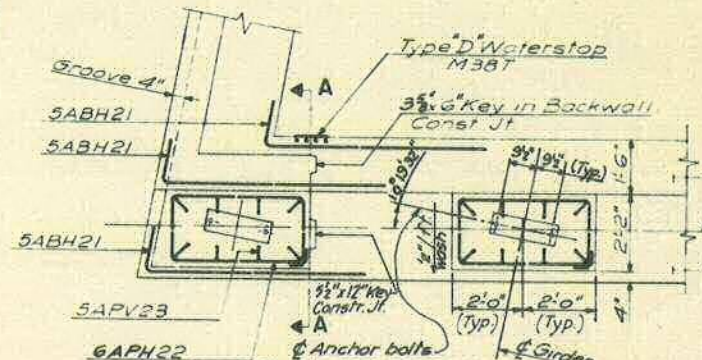

PLAN - PEDESTALS
Scale ⅜" = 1'-0"

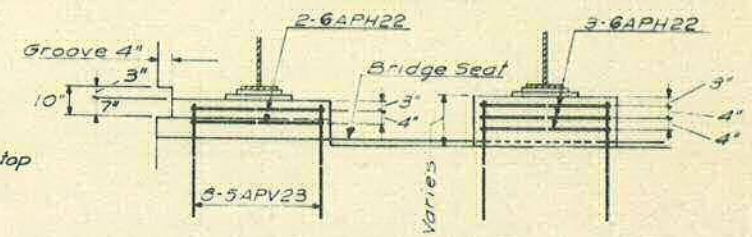

ELEVATION - PEDESTALS
Scale ⅜" = 1'-0"

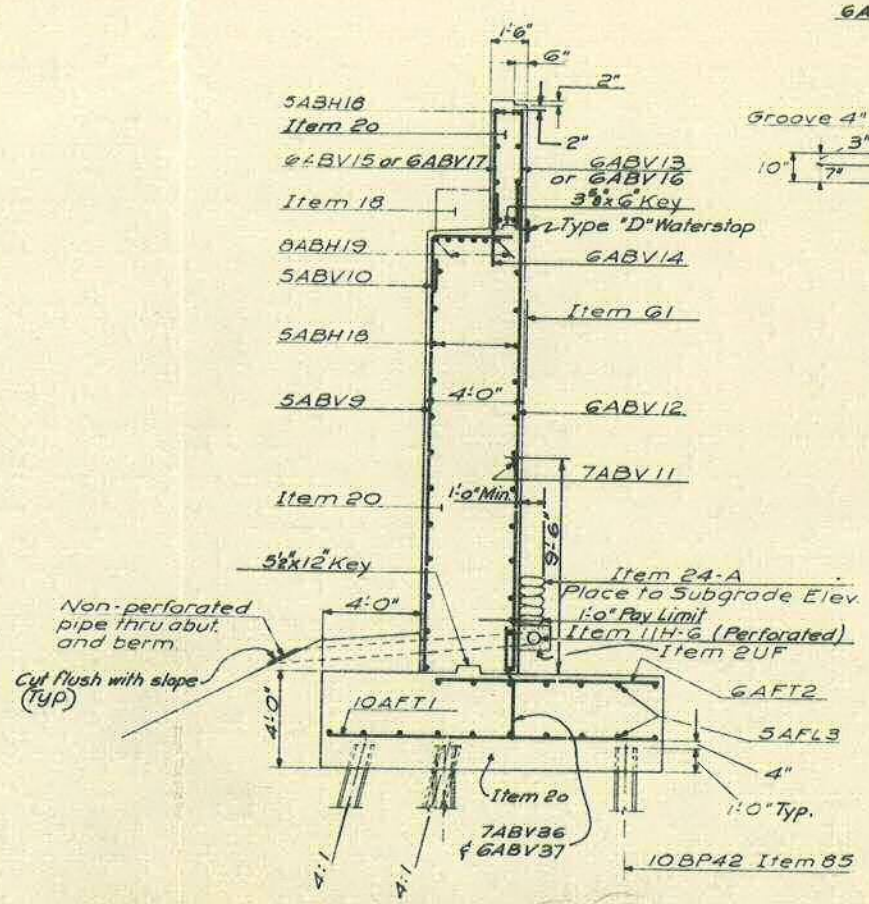

TYPICAL SECTION
Scale ¼" = 1'-0"

For Notes see Sheet No. 234

F.A.I. 481

BRIDGE No. 3 S

RTE 481 OVER KIRKVILLE ROAD-SOUTH
SOUTH ABUTMENT

DRAWING NO.	SCALE	DATE
9093-03	As shown	8/15/10

LOCKWOOD, KESSLER & BARTLETT,
CONSULTING ENGINEERS - SYOSSET, NEW

In Charge of... Y. Eaton
Made by... A. Sampsidis
Traced by... M. Ito
Checked by... A. Sampsidis

F.I.S.H. 70

FED. RD. REG. NO.	STATE	FEDERAL PROJECT AID NO.	SHEET NO.
1	NEW YORK	I-690-3(28) I-481-2(116)	233

INTERSTATE ROUTE CONNECTION ST

BUTTERNUT INTERCHANGE - COLLAME
ONONDAGA COUNTY

1093672

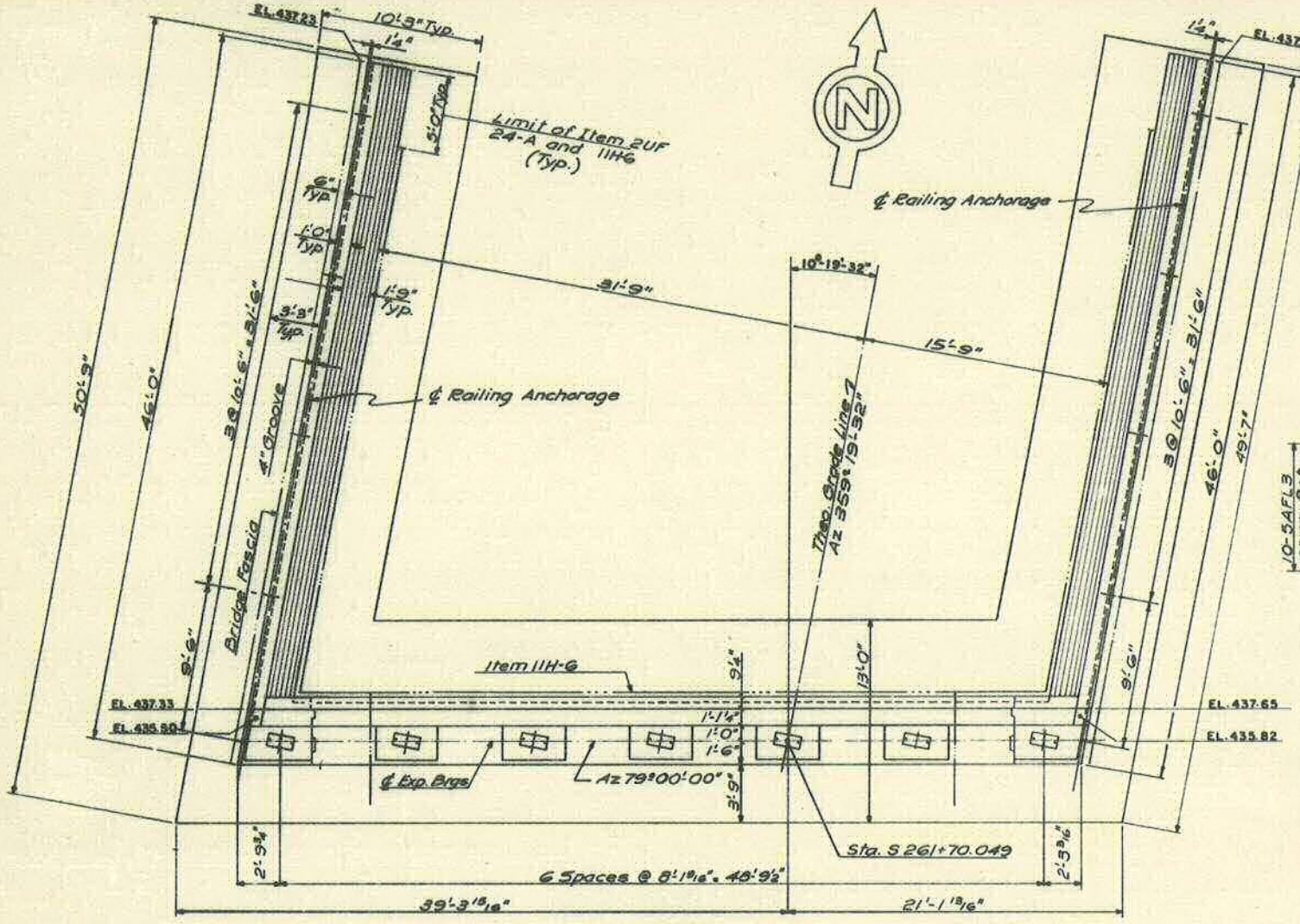

PLAN
Scale 3/16" = 1'-0"

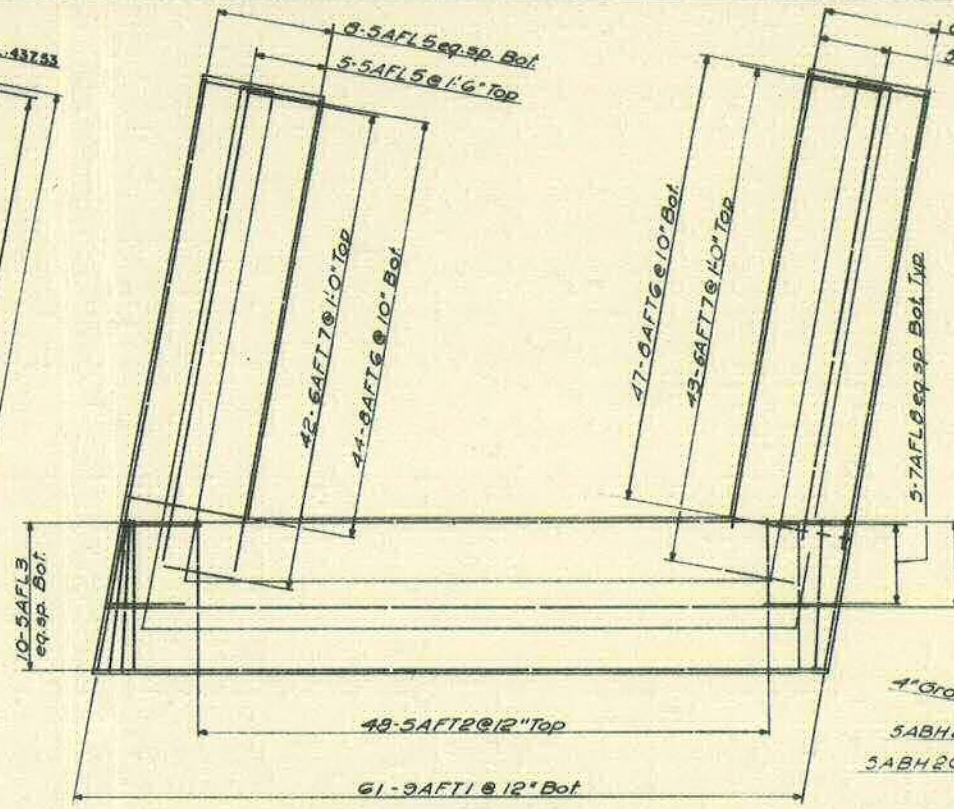

FOOTING REINFORCEMENT
Scale 1/8" = 1'-0"

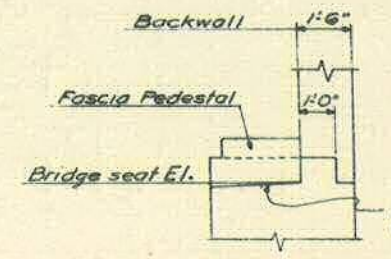

SECTION A-A
Scale 3/8" = 1'-0"

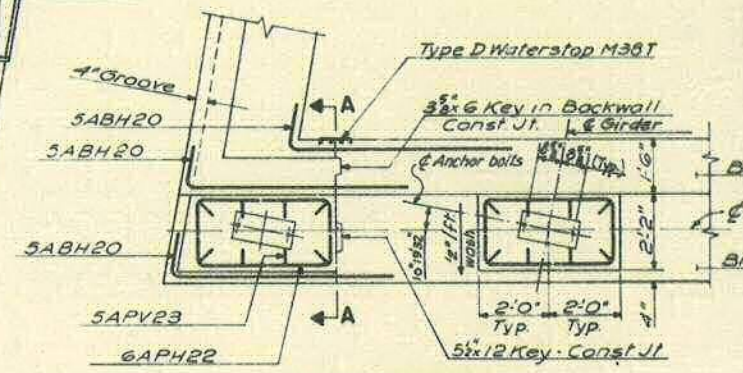

PLAN - PEDESTALS
Scale 3/8" = 1'-0"

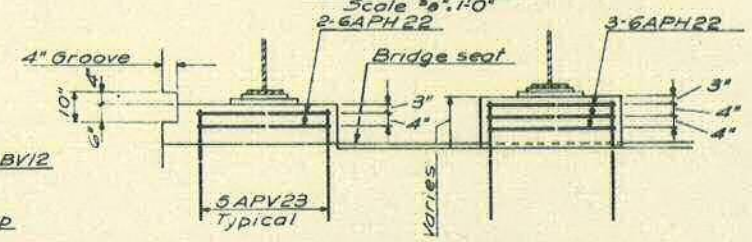

ELEVATION - PEDESTALS
Scale 3/8" = 1'-0"

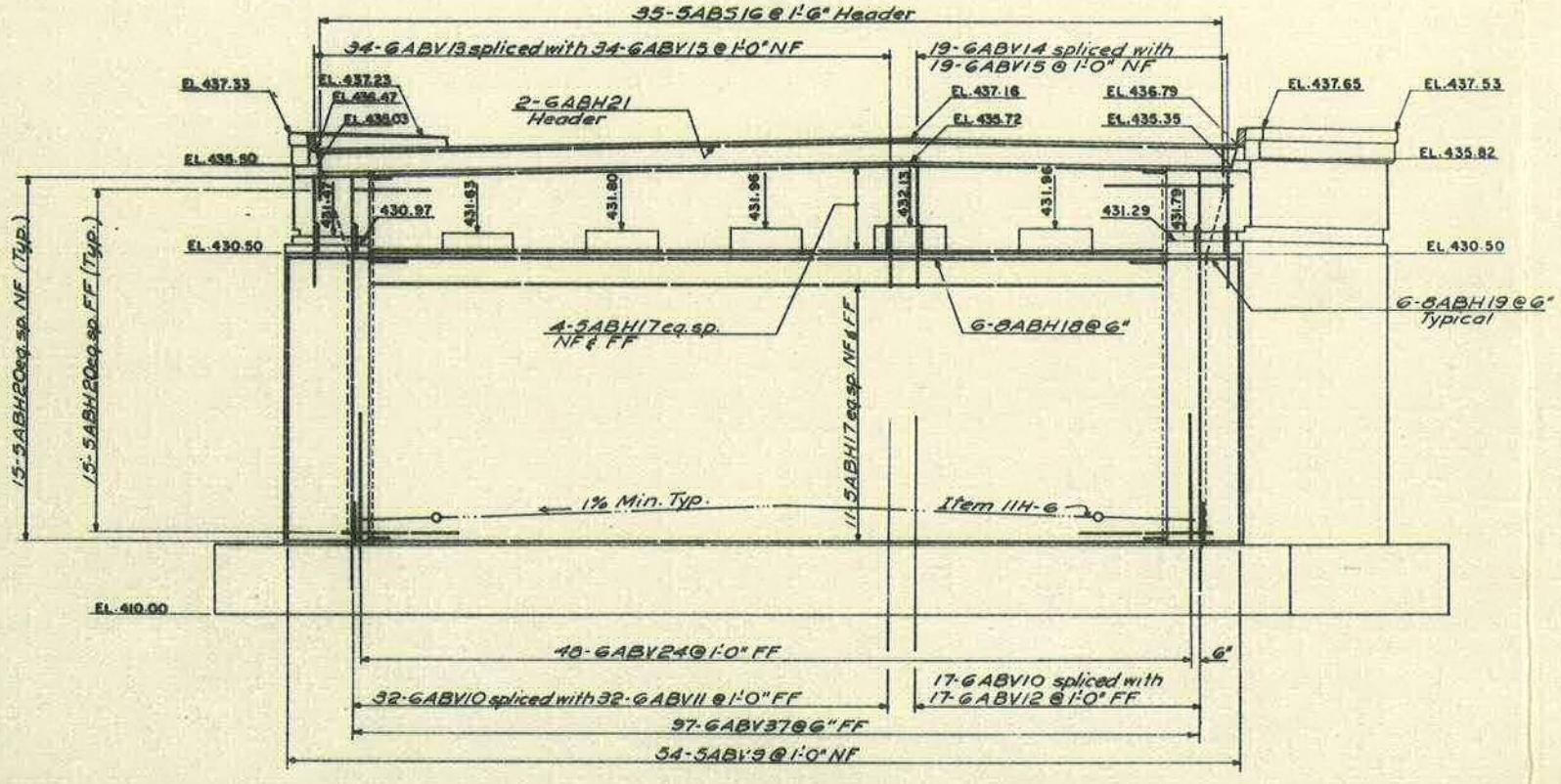

ELEVATION (Piles not shown)
Scale 3/16" = 1'-0"

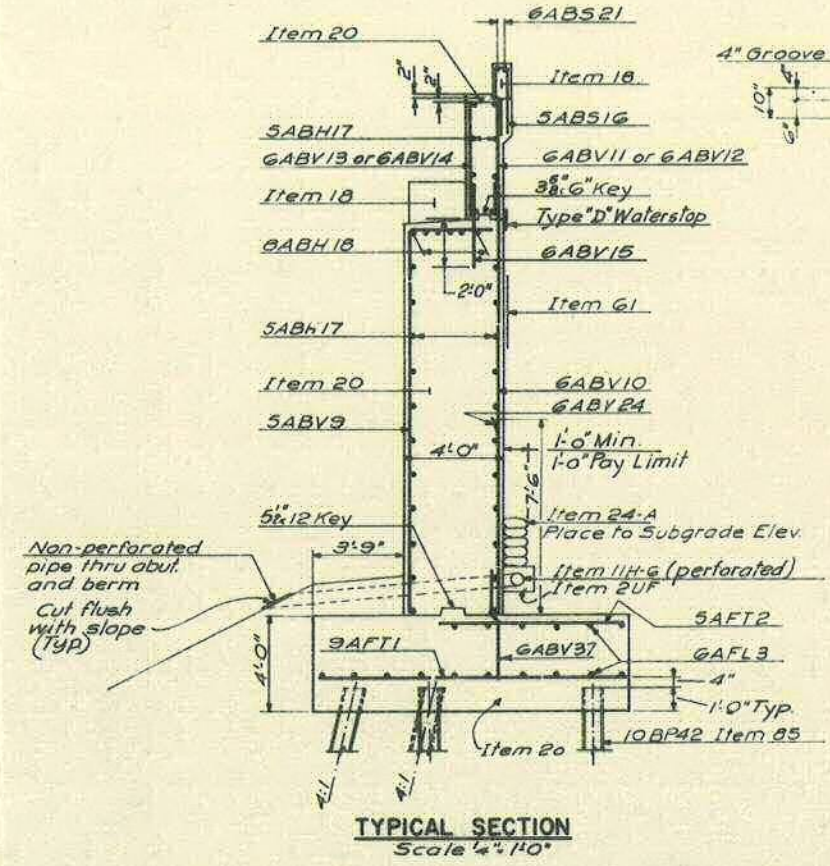

TYPICAL SECTION
Scale 1/4" = 1'-0"

For Notes see Sheet No. 235

F.A.I. 481	
BRIDGE No. 3 S	
RTE 481 OVER KIRKVILLE ROAD-SOU	
NORTH ABUTMENT	
DRAWING NO. 9093-03	SCALE As shown
DATE 8/15/70	

LOCKWOOD, KESSLER & BARTLET
CONSULTING ENGINEERS - SYOSSET, NE

In Charge of: Y. Eaton
Made by: A. Sampsidis
Traced by: M. Mirza
Checked by: A. Sampsidis

FED. RD. REG. NO.	STATE	FEDERAL AID PROJECT NO.	
1	NEW YORK	I-690-3(23)	2
		I-481-2(11)8	

INTERSTATE ROUTE CONNECTIO

BUTTERNUT INTERCHANGE-COU

ONONDAGA COUNTY

1093672

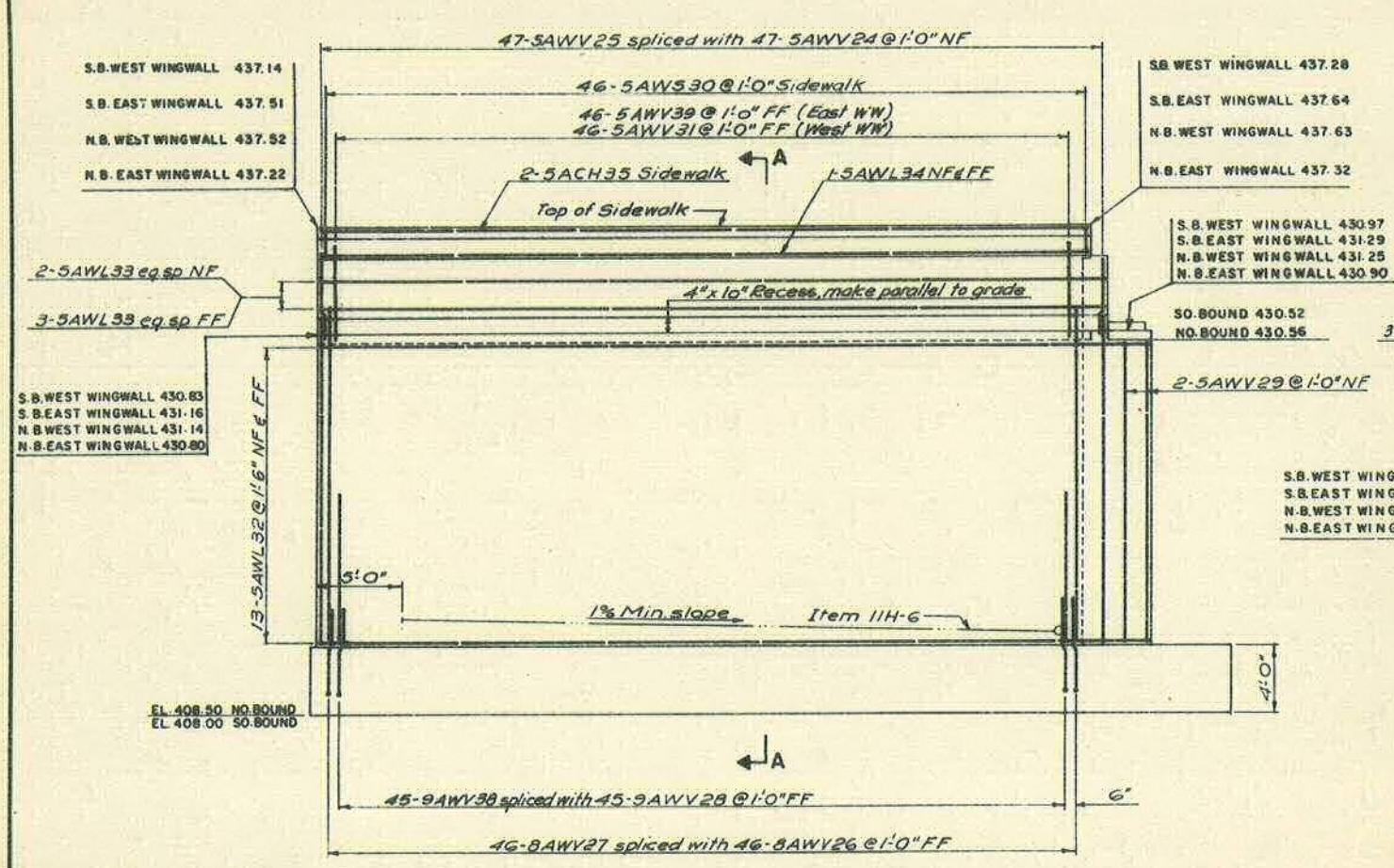

SOUTH ABUTMENT *(Piles not shown)*

(NB EAST WINGWALL SHOWN)

Scale 3/16" = 1'-0"

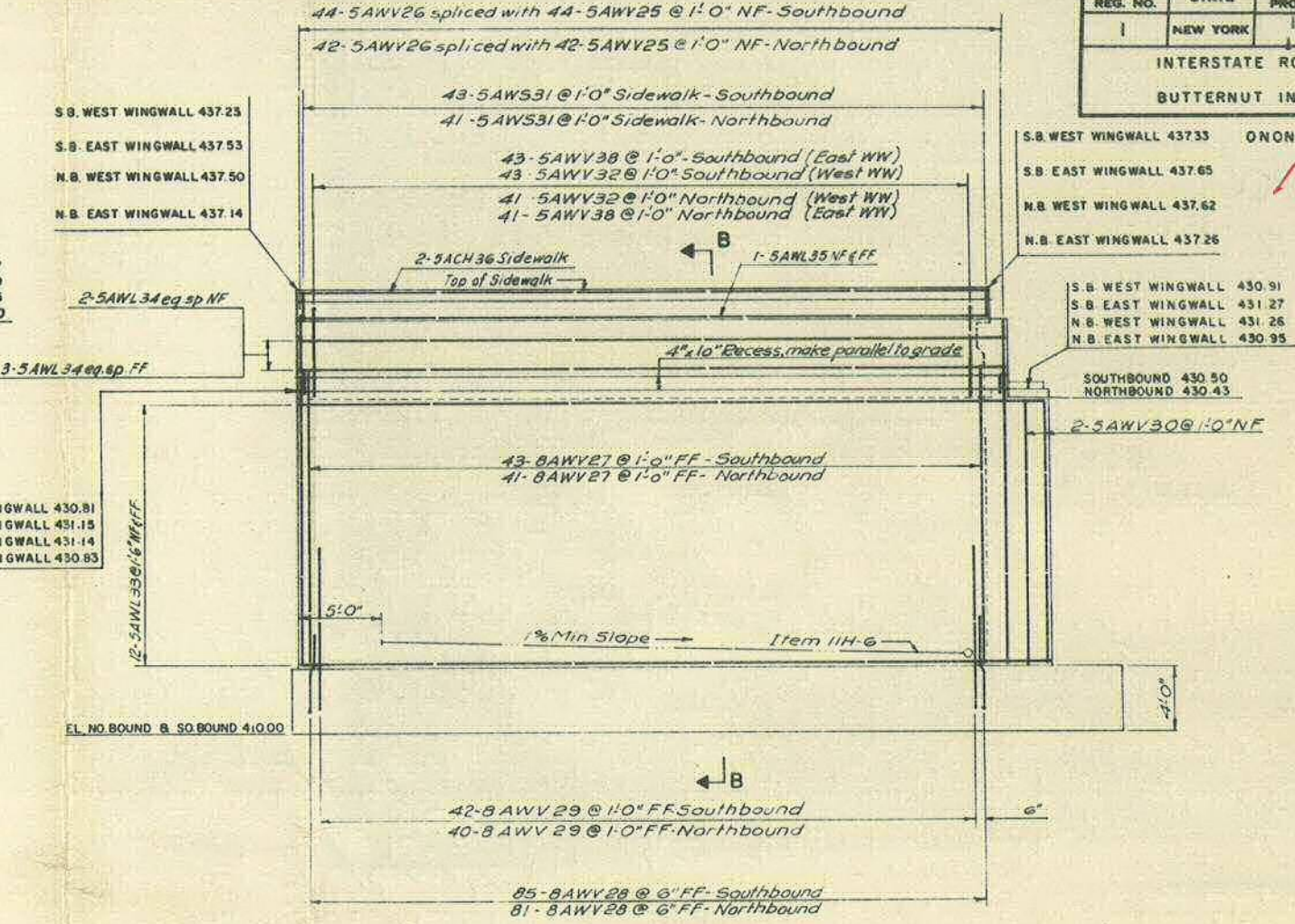

NORTH ABUTMENT *(Piles not shown)*

(SB WEST WINGWALL SHOWN)

Scale 3/16" = 1'-0"

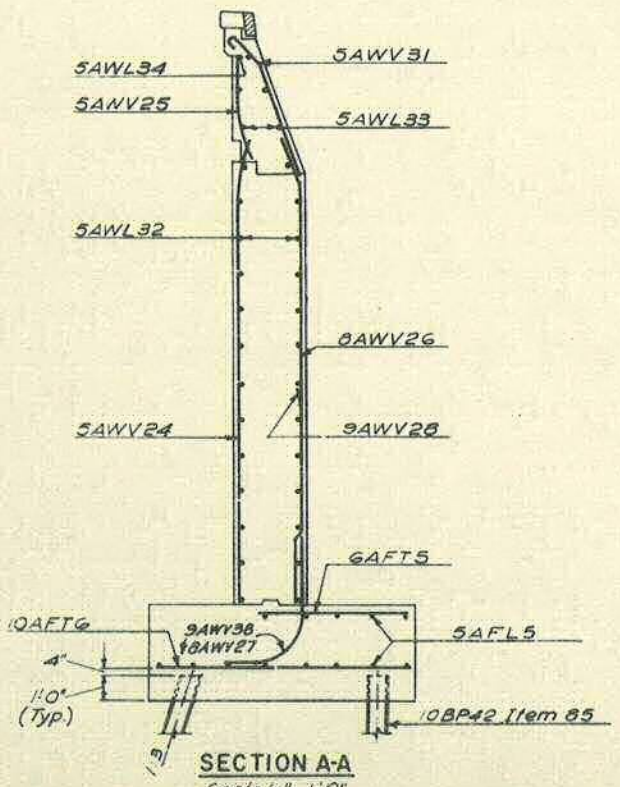

SECTION A-A

Scale 4" = 1'-0"

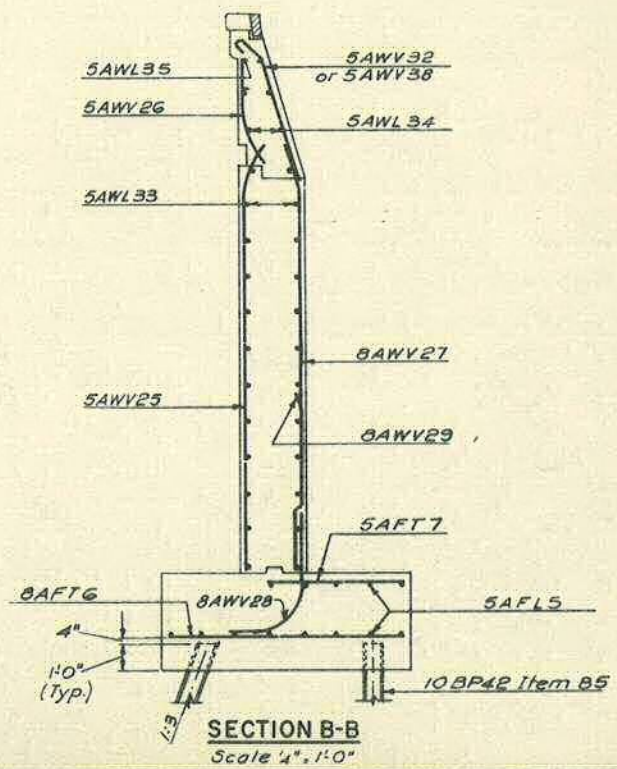

SECTION B-B

Scale 4" = 1'-0"

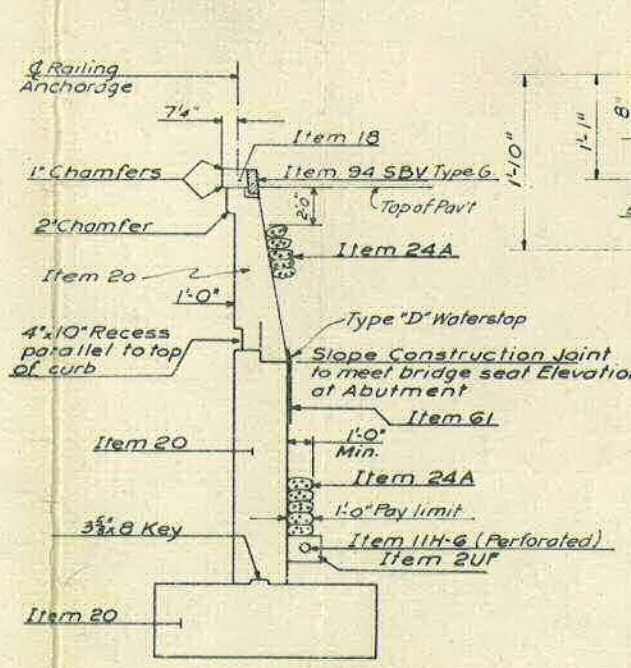

TYPICAL SECTION *(Piles not shown)*

No Scale

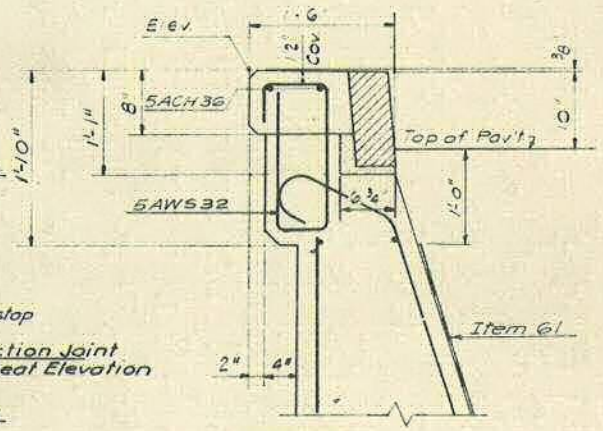

DETAIL

Scale 1" = 1'-0"

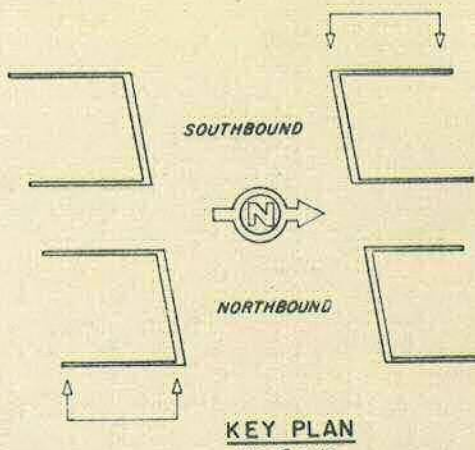

KEY PLAN

No Scale

In Charge of: V. Eaton
Made By: A. Sempsais
Traced By: M.N.
Checked By: A. Sanaidis

F.A.I. 481

BRIDGE No. 3

RTE 1481 OVER KIRKVILLE ROAD-WINGWALLS

DRAWING NO.	SCALE	DATE
9093-03	As shown	8/15/70

LOCKWOOD, KESSLER & BAR
CONSULTING ENGINEERS – SYOSS

FED. RD. REG. NO.	STATE	FEDERAL PROJECT AID NO.	SHEET NO.
1	NEW YORK	1-690-3(28) 1-481-2(116)	23

INTERSTATE ROUTE CONNECTION
BUTTERNUT INTERCHANGE- COLLA
ONONDAGA COUNTY

1093672

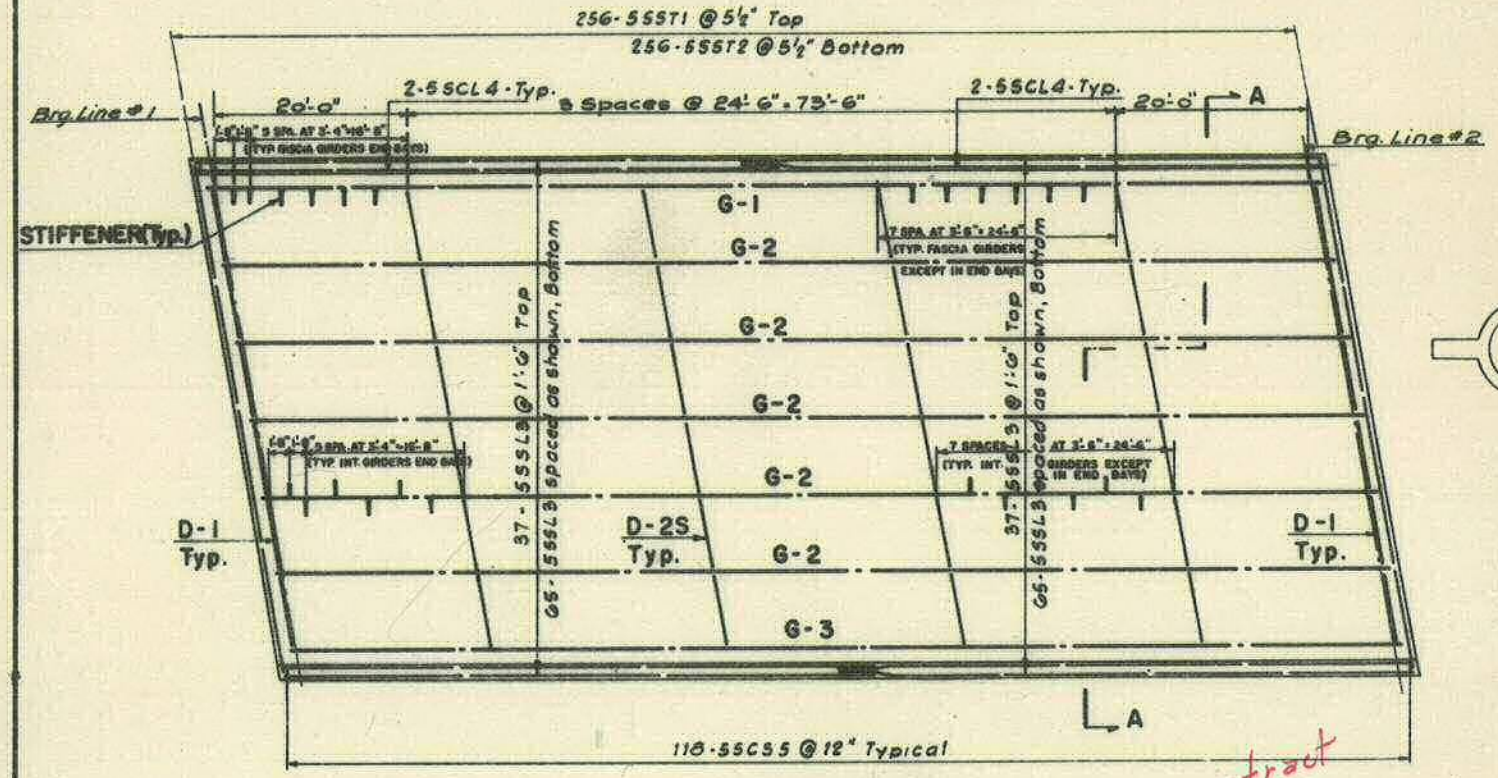

PLAN (SB)
Scale 1"=10'
(NB PLAN SIMILAR)

Under Contract D251436 1½" of concrete was added to old finish grade

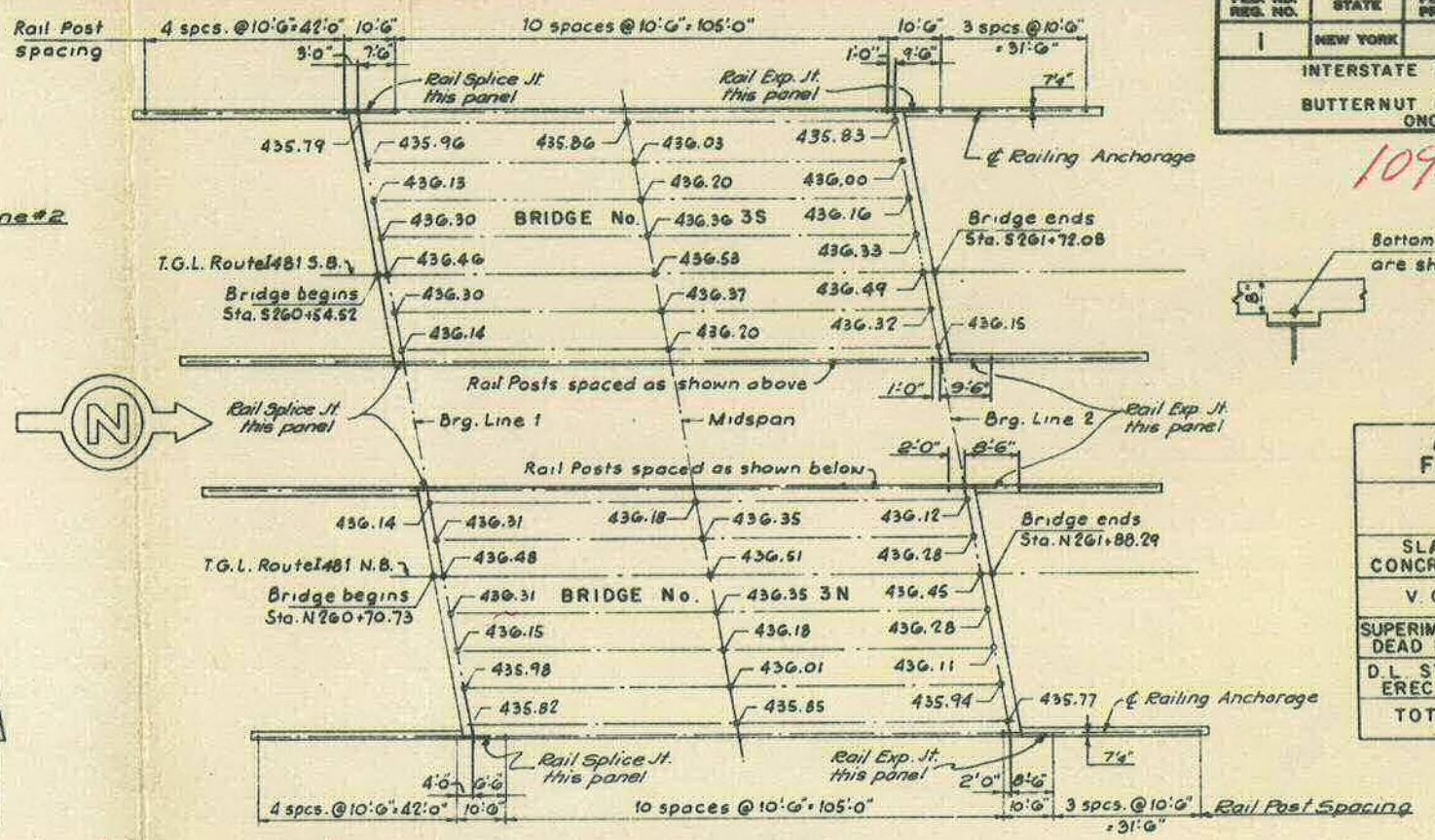

KEY PLAN
Scale 1" = 20'

Bottom of Slab Elevations are shown on Key Plan

ADJUSTMENT FOR CAMBER

	INTERIOR GIRDER	FASCI GIRDE
SLAB CONCRETE	2 13/16"	2 1/2
V. C.	1/16"	1 1/16
SUPERIMPOSED DEAD LOAD	1/2"	9/16
D.L. STEEL ERECTED	1"	1"
TOTAL	5"	4 3/8

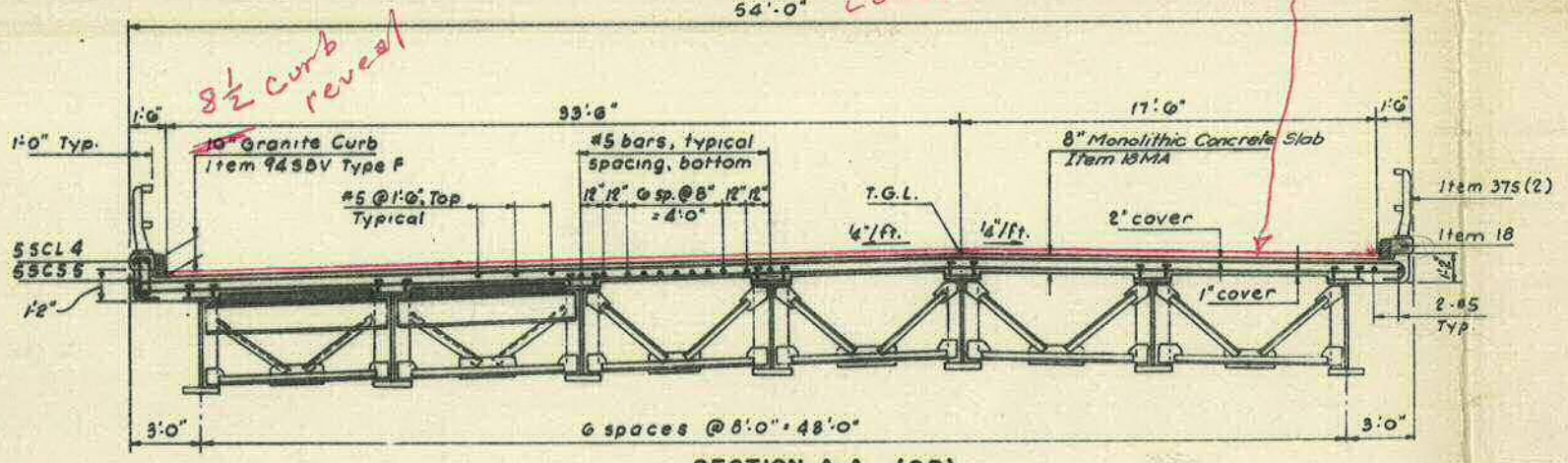

SECTION A-A (SB)
Scale ¼"=1'-0"
(NB OPPOSITE HAND)

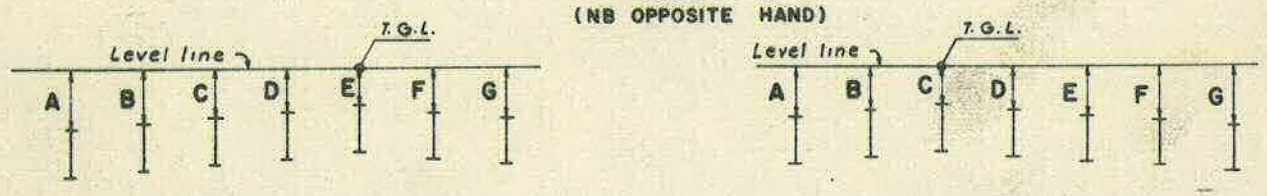

BRIDGE No. 3-S **BRIDGE No. 3-N**

VERTICAL MEASUREMENTS TO TOP OF STEEL

	A	B	C	D	E	F	G
BRG. LINE No.1	1'-7 3/16"	1'-5 3/16"	1'-3 1/8"	1'-1 5/8"	11 1/16"	1'-1"	1'-3"
BRG. LINE No.2	1'-6 15/16"	1'-5"	1'-3"	1'-1 1/16"	11 1/16"	1'-1 1/8"	1'-3 1/8"

	A	B	C	D	E	F	G
BRG. LINE No.1	1'-3 1/8"	1'-1 1/8"	11 1/16"	1'-1 1/16"	1'-3"	1'-5"	1'-6 15/16"
BRG. LINE No.2	1'-3"	1'-1"	11 1/16"	1'-1 1/8"	1'-3 1/8"	1'-5 3/16"	1'-7 3/16"

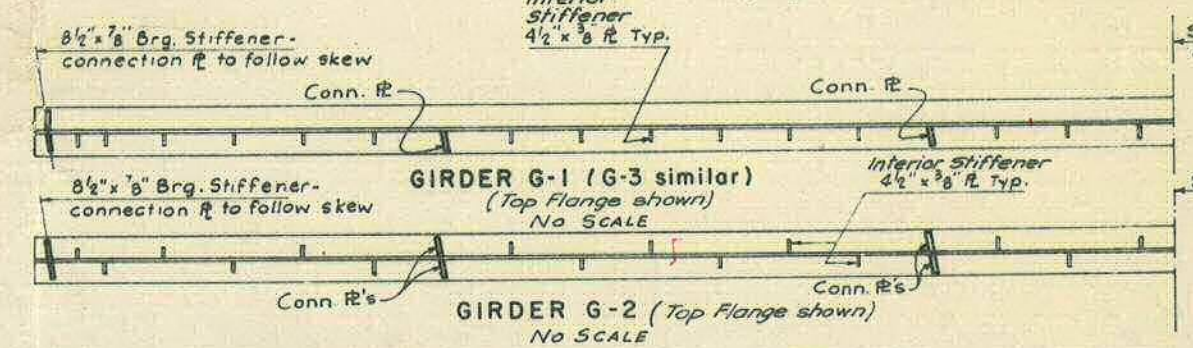

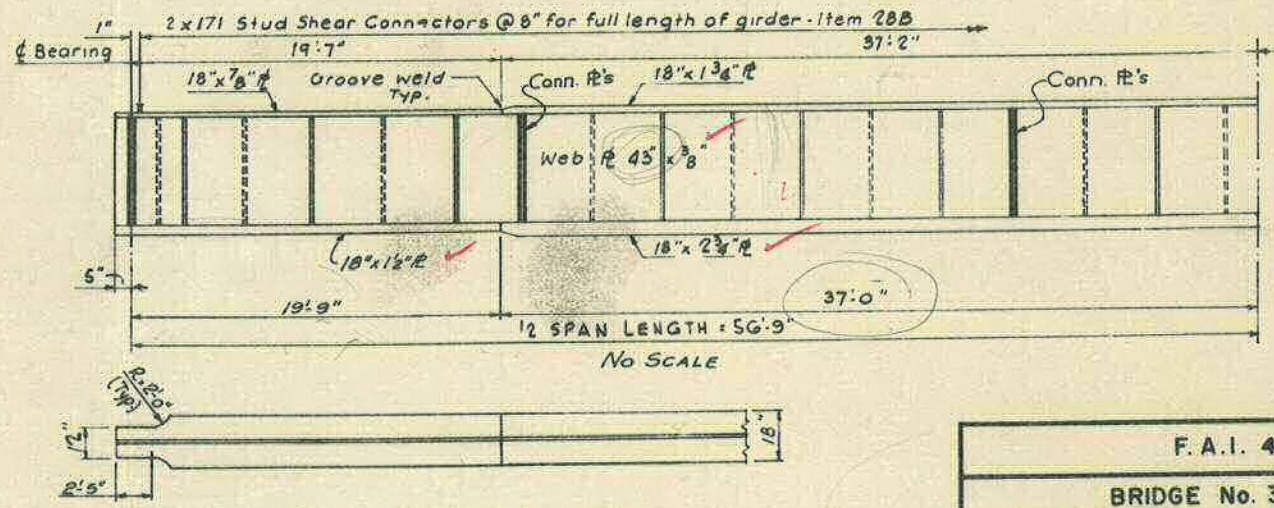

PLAN - BOTTOM FLANGE
No SCALE

NOTES
1. For Diaphragm Details, Connection Plates, and weld sizes, see Sheet No. 129
2. For Fabrication Notes see Sheet No. 129
3. For Curb Details, see Sheet No. 125

F.A.I. 481

BRIDGE No. 3S & 3N
RTE 481 OVER KIRKVILLE ROAD-
SUPERSTRUCTURE

DRAWING NO.	SCALE	DATE
9093-03	As shown	6/15/70

LOCKWOOD, KESSLER & BARTL
CONSULTING ENGINEERS – SYOSSET,

In charge of: J. Eaton
Made by: L. Blume
Traced by: L. Blume
Checked by: J. Sammartino

3/3 1093672

D259214

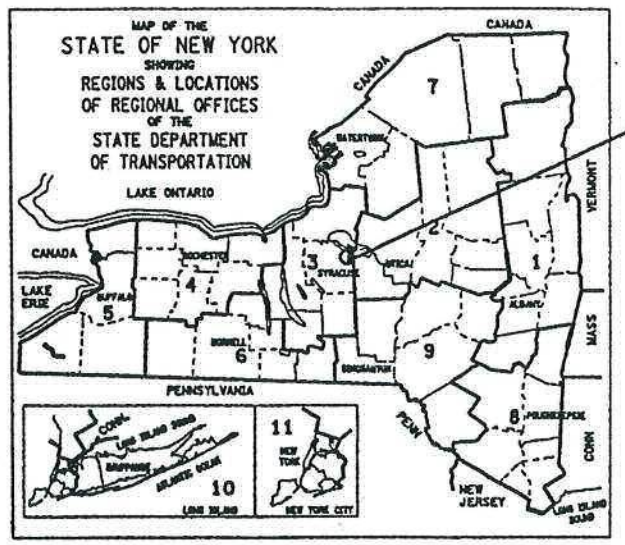

THIS IS A BRIDGE REHABILITATION PROJECT ON VARIOUS BRIDGES ON INTERSTATE 481, LOCATED IN THE TOWNS OF CICERO AND DEWITT IN ONONDAGA COUNTY. THIS WORK CONSISTS OF BRIDGE JOINTS, BEARINGS, BRIDGE RAIL AND CONCRETE REPAIR OF SUBSTRUCTURES. THERE ARE 28 BRIDGES IN THE PROJECT BEGINNING AT REFERENCE MARKER 481I-3301-1000 SOUTH OF THE CITY OF SYRACUSE AND ENDING AT REFERENCE MARKER 481I-3301-2143. I481 INTERCHANGE NORTH OF THE CITY.

STATE OF NEW YORK
DEPARTMENT OF TRANSPORTATION
OFFICE OF ENGINEERING

BRIDGE REHABILITATION PROJECT (ELEMENT SPECIFIC)
VARIOUS BRIDGES ON INTERSTATE 481
TOWNS OF DEWITT AND CICERO

VOLUME 1 OF 2

432 SHEETS ONONDAGA COUNTY CONTRACT D259214

F.A. PROJECT

STANDARD SHEETS

M203-4, M203-5, M203-6R1, M603-1
M606-32, M606-33, M606-34,
M619-3R1, M619-4, M619-5
M685-1, M685-2R1, M685-3R1
M685-4R1, M685-5R1, M403-1, M203-4,
M203-5, M203-6R1, M603-1

10/4/06
AR 11/3/06
DJ. Hann 10/10/12

ALL WORK CONTEMPLATED UNDER THIS CONTRACT IS TO BE COVERED BY AND IN CONFORMITY WITH THE STANDARD SPECIFICATIONS (METRIC UNITS) OF JANUARY 2, 2002, AS AMENDED BY ADDENDA NOS. 1 AND 2, EXCEPT AS MODIFIED ON THESE PLANS AND IN THE ITEMIZED PROPOSAL.

CONTRACTOR'S NAME _____
AWARD DATE _____
COMPLETION DATE _____
FINAL ACCEPTANCE DATE _____
REGIONAL DIRECTOR _____
ENGINEER IN CHARGE _____
FINAL COST TOTAL _____

FISCAL SHARE	COST(S)

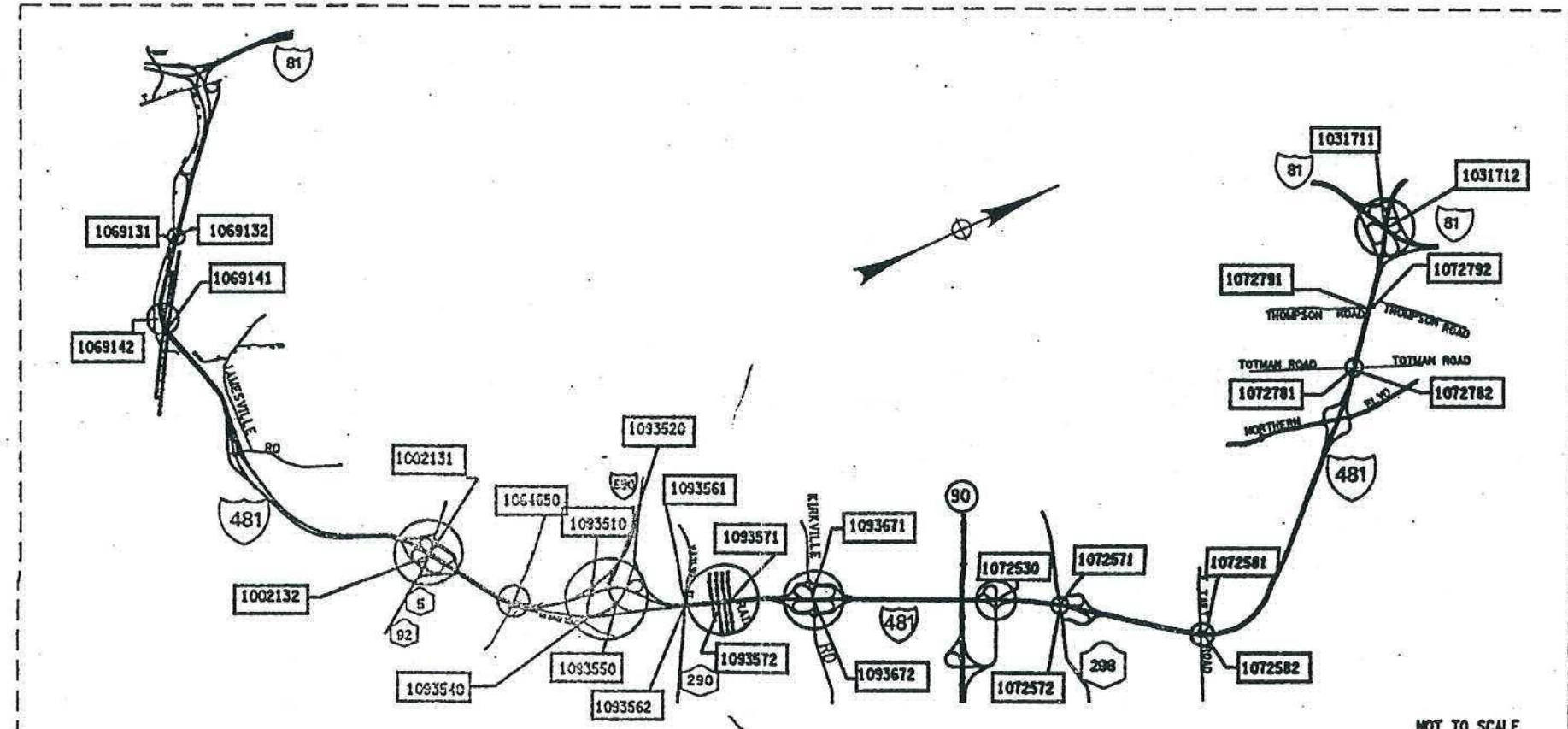

NOT TO SCALE

PROJECT LOCATION

BRIDGE REHAB. PROJ.- ELEMENT SPECIFIC			
VARIOUS BRIDGES ON INTERSTATE 481			
TOWNS OF DEWITT AND CICERO			
ONONDAGA COUNTY			
FED. ROAD REG. NO.	STATE	SHEET NO.	TOTAL SHEETS
1	N.Y.	1	432
FEDERAL AID PROJECT NO.			
CAPITAL PROJECT IDENTIFICATION NO. 3056.13			
INDEX ON SHEET NO. 5 & 6			

RECOMMENDED BY John E. Fritze 9/04/02
REGIONAL DESIGN ENGINEER DATE

RECOMMENDED BY Myron A. Darby 9/4/02
REGIONAL CONSTRUCTION ENGINEER DATE

RECOMMENDED BY 9/04/02
REGIONAL TRANSPORTATION MAINTENANCE ENGINEER DATE

RECOMMENDED BY 9-4-02
REGIONAL TRAFFIC ENGINEER DATE

APPROVED BY 09-04-02
REGIONAL DIRECTOR DATE

DESIGN ROBSON Clement & JOB MANAGER DeCicco DESIGNED BY Hall CHECKED BY Hall ESTIMATED BY Hall DRAFTED BY Hall CHECKED BY Hall

FED ROAD REG. NO.	STATE	CONTRACT NO.	SHEET NO.	TOTAL SHEETS
1	N.Y.	D259214	333	432

BRIDGE REHABILITATION PROJECT (ELEMENT SPECIFIC)
VARIOUS BRIDGES ON INTERSTATE 481
TOWNS OF DEWITT AND CICERO
ONONDAGA COUNTY
P.I.N. 305613 B.I.N. 1093671 & 1093672

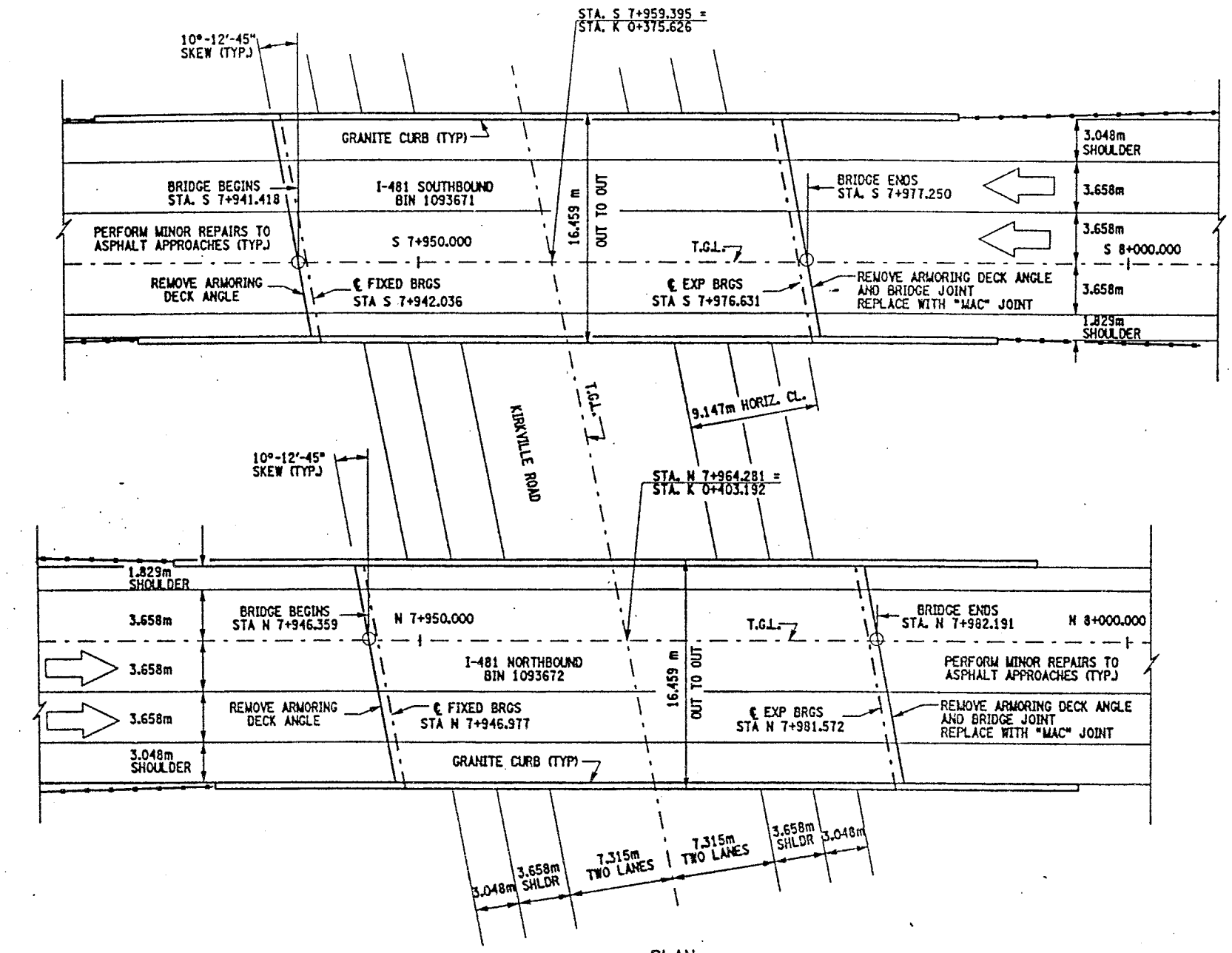

PLAN
SCALE: 1:200

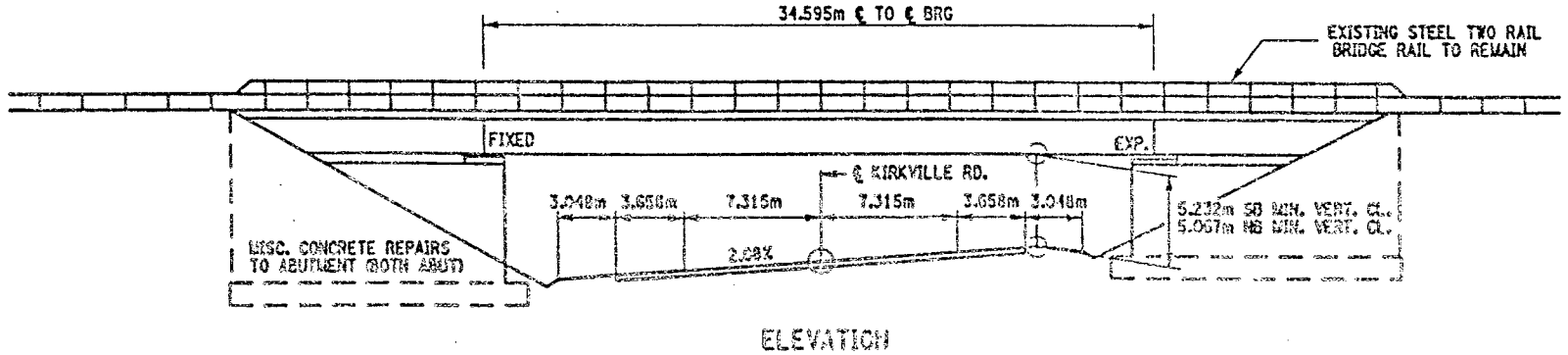

ELEVATION
SCALE: 1:200

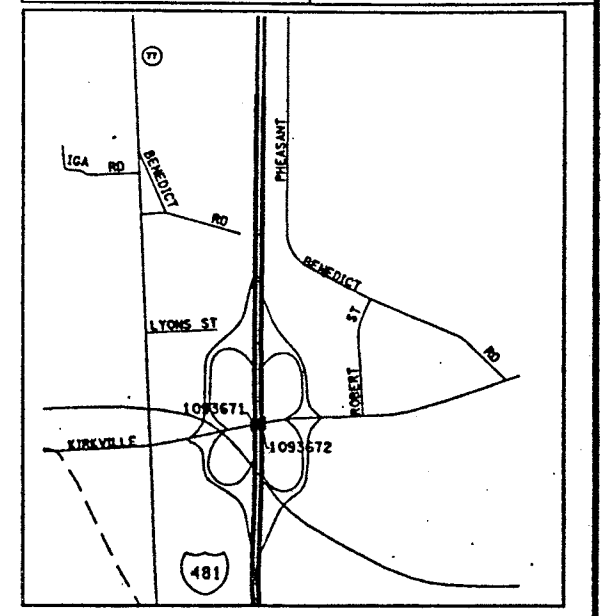

LOCATION MAP
QUADRANGLE
SCALE: 1:24000

WORK TO BE DONE ON BIN 1093671:

1. ESTABLISH MP&T SCHEME FOR STAGE CONSTRUCTION.
2. REMOVE EXISTING BRIDGE JOINT AND ARMOR DECK ANGLE AT END ABUTMENT, (NORTH).
3. REMOVE ARMORING DECK ANGLE AT BEGINNING ABUTMENT, (SOUTH).
4. PLACE NEW BRIDGE JOINT AT END ABUTMENT, ("MAC" JOINT).
5. REPAIR DECK AREA AT BEGINNING ABUTMENT WHERE ARMORING ANGLE WAS REMOVED.
6. PERFORM MINOR REPAIRS TO ASPHALT APPROACHES.
7. PERFORM MISCELLANEOUS REPAIRS TO CONCRETE ELEMENTS AT ABUTMENTS.

WORK TO BE DONE ON BIN 1093672:

1. ESTABLISH MP&T SCHEME FOR STAGE CONSTRUCTION.
2. REMOVE EXISTING BRIDGE JOINT AND ARMORING DECK ANGLE AT END ABUTMENT, (NORTH).
3. REMOVE ARMORING DECK ANGLE AT THE BEGINNING ABUTMENT, (SOUTH).
4. PLACE NEW BRIDGE JOINT AT END ABUTMENT, ("MAC" JOINT).
5. REPAIR DECK AREA AT BEGINNING ABUTMENT WHERE ARMORING ANGLE WAS REMOVED.
6. PERFORM MINOR REPAIRS TO ASPHALT APPROACHES.
7. PERFORM MISCELLANEOUS REPAIRS TO CONCRETE ELEMENTS AT ABUTMENTS.

NOTE:

"MAC" JOINT IS A MODIFIED ARMORED JOINT SYSTEM WITH COMPRESSION SEAL.

BIN 1093671 SOUTHBOUND
BIN 1093672 NORTHBOUND
ALL DIMENSIONS ARE IN m UNLESS OTHERWISE NOTED

AS BUILT REVISIONS

SIGNATURE DATE

INTERSTATE 481
OVER
KIRKVILLE ROAD
PLAN, ELEVATION AND BRIDGE SECTION

STATE OF NEW YORK
DEPARTMENT OF TRANSPORTATION

FILENAME	REGION	DATE	DRAWING NO.
305613AL.G1A	3	10/02	GP18-1

DESIGN SUPERVISOR — JOB MANAGER — DESIGNED BY — ESTIMATED BY — DRAFTED BY — CHECKED BY

FED ROAD REG. NO.	STATE	CONTRACT NO.	SHEET NO.	TOTAL SHEETS
1	N.Y.	D259214	334	432

BRIDGE REHABILITATION PROJECT (ELEMENT SPECIFIC)
VARIOUS BRIDGES ON INTERSTATE 481
TOWNS OF DEWITT AND CICERO
ONONDAGA COUNTY
P.I.N. 305613 | B.I.N. 1093671 & 1093672

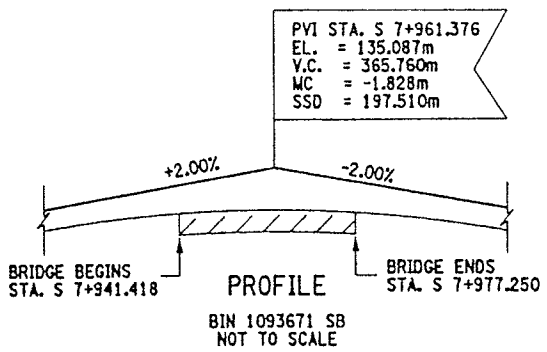

PROFILE
BIN 1093671 SB
NOT TO SCALE

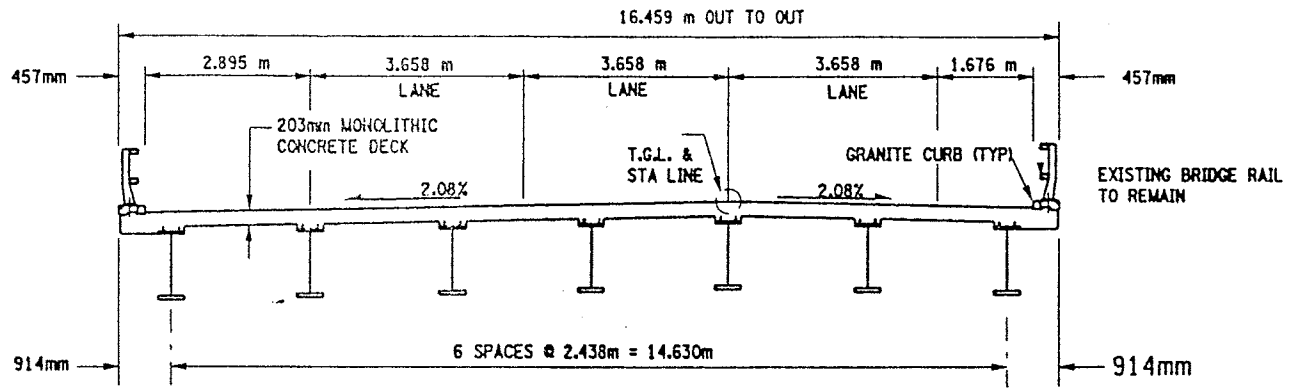

BRIDGE SECTION
BIN 1093671 SB
SCALE: 1:100

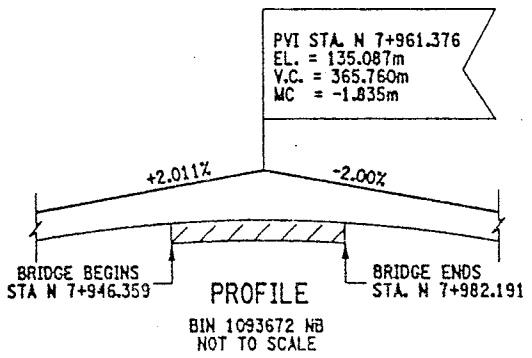

PROFILE
BIN 1093672 NB
NOT TO SCALE

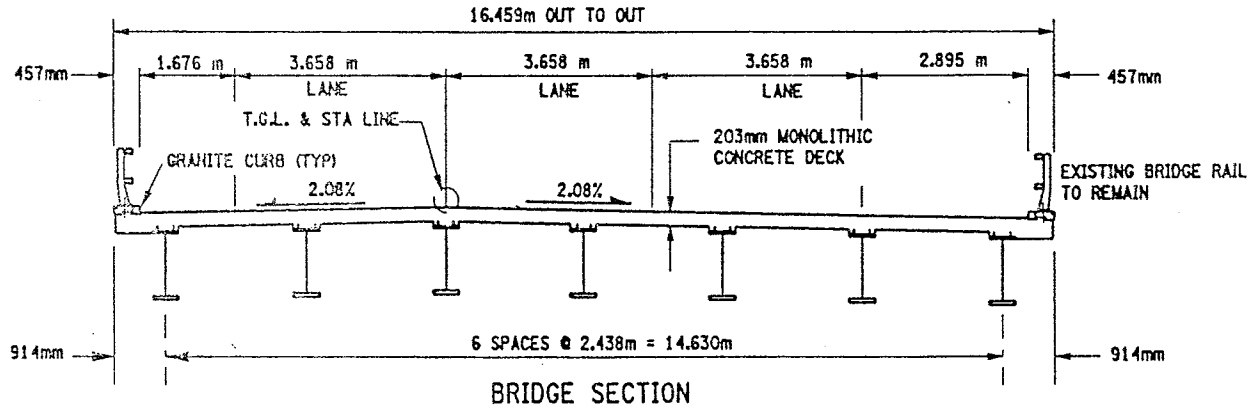

BRIDGE SECTION
BIN 1093672 NB
SCALE: 1:100

ALL DIMENSIONS ARE IN m UNLESS OTHERWISE NOTED

AS BUILT REVISIONS

SIGNATURE _____ DATE _____

INTERSTATE 481
OVER
KIRKVILLE ROAD

TYPICAL BRIDGE SECTION AND PROFILE

STATE OF NEW YORK
DEPARTMENT OF TRANSPORTATION

FILENAME	REGION	DATE	DRAWING NO.
305613AL.G1A	3	10/02	TS18-1

DESIGN SUPERVISOR _____ JOB MANAGER _____ DESIGNED BY _____ DRAFTED BY _____ CHECKED BY _____ ESTIMATED BY _____

FED ROAD REG. NO.	STATE	CONTRACT NO.	SHEET NO.	TOTAL SHEETS
1	N.Y.	D259214	338	432

BRIDGE REHABILITATION PROJECT (ELEMENT SPECIFIC)

VARIOUS BRIDGES ON INTERSTATE 481

TOWNS OF DEWITT AND CICERO

ONONDAGA COUNTY

P.I.N. 305613 | B.I.N. 1093672

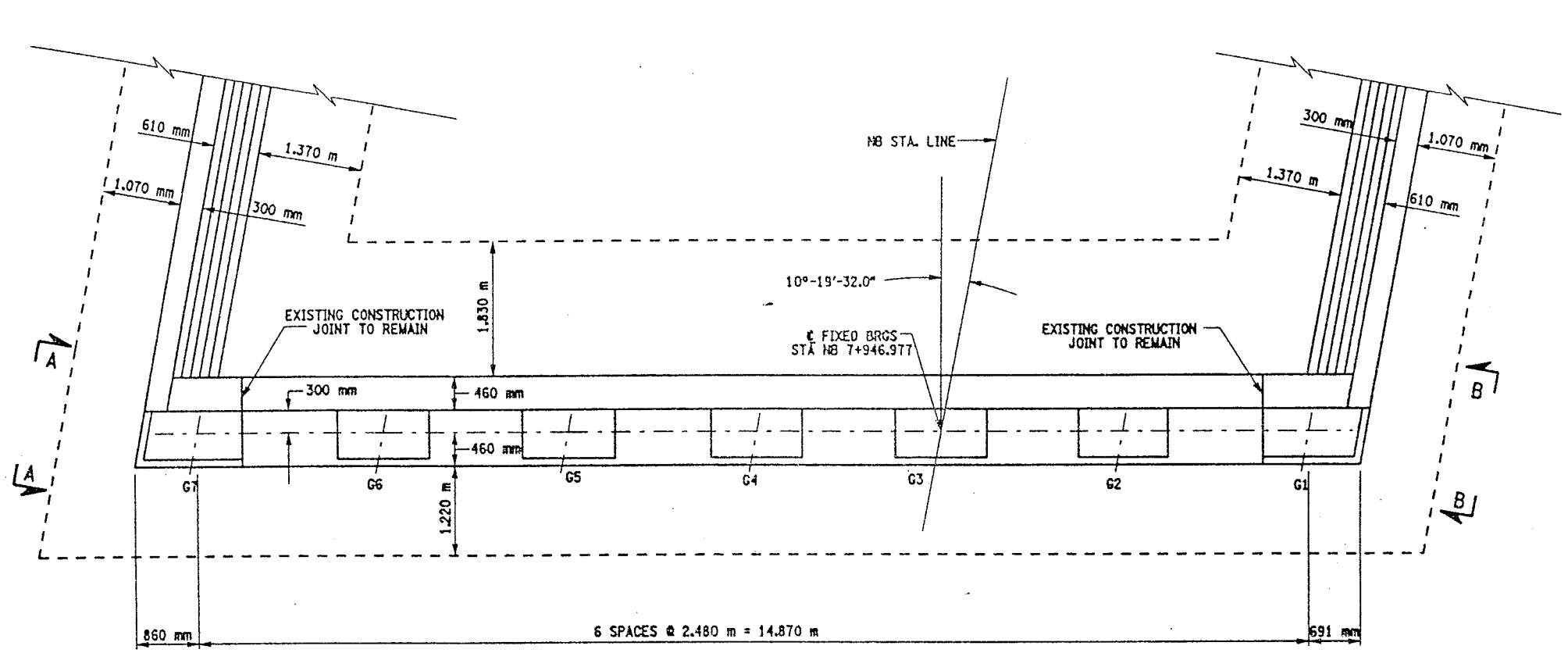

SOUTH ABUTMENT

PLAN

SCALE 1:40

NOTES:

1. ALL DIMENSIONS SHOWN FOR CONCRETE REMOVAL ARE APPROXIMATE AND SHALL BE FIELD VERIFIED BY THE CONTRACTOR AND EIC.
2. REMOVE CONCRETE TO LIMITS SHOWN AS WELL AS TO SOUND CONCRETE, A.O.B.E.
3. WHEN REMOVING EXISTING CONCRETE, SAWCUT 5 mm MIN. TO PRODUCE NEAT REMOVAL LINES. ANY COST TO BE INCLUDED IN THE BID PRICE FOR ITEM 582.05M.
4. ALL EXISTING REINFORCEMENT TO REMAIN.
5. ELEVATIONS ARE GIVEN FOR QUANTITY ESTIMATES ONLY.
6. REFER TO CONTRACT FISH 70-7 FOR ORIGINAL CONSTRUCTION DETAILS AND D251436 FOR ADDITIONAL DETAILS.
7. FOR REMOVAL DETAIL SEE DWG. AB18-2
8. FOR SECTION A-A AND B-B SEE DWG AB18-5

AREAS OF PROPOSED WORK: ITEM 582.05M REMOVAL OF STRUCTURAL CONCRETE-REPLACEMENT WITH CLASS A CONCRETE

LIST OF ITEMS USED:

ITEM 582.05M - REMOVAL OF STRUCTURAL CONCRETE-REPLACEMENT WITH CLASS A CONCRETE (CLA

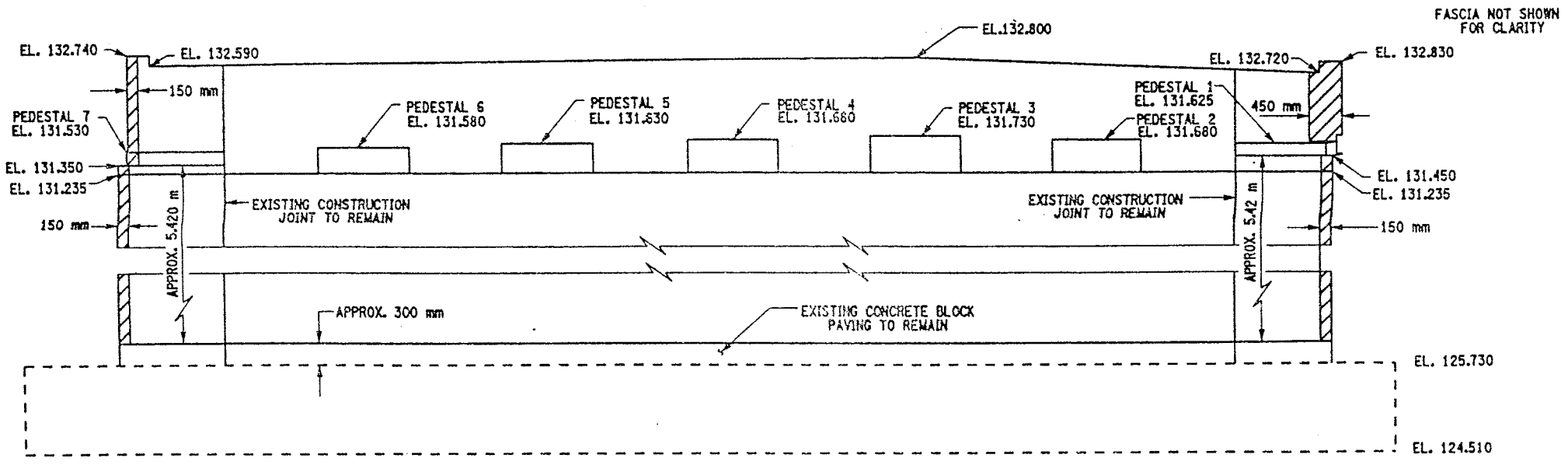

ELEVATION

SCALE 1:40

ALL DIMENSIONS ARE IN m UNLESS OTHERWISE NOTED

AS BUILT REVISIONS

SIGNATURE DATE

INTERSTATE 481 NB
OVER
KIRKVILLE ROAD
SOUTH ABUTMENT
PLAN AND ELEVATION

STATE OF NEW YORK
DEPARTMENT OF TRANSPORTATION

FILENAME	REGION	DATE	DRAWING NO.
305613AL.A1B	3	10/02	AB18-4

DESIGN SUPERVISOR ____ JOB MANAGER ____ DESIGNED BY ____ ESTIMATED BY ____ DRAFTED BY ____ CHECKED BY ____ CHECKED BY ____

FED ROAD REG. NO.	STATE	CONTRACT NO.	SHEET NO.	TOTAL SHEETS
1	N.Y.	D259214	339	432

BRIDGE REHABILITATION PROJECT (ELEMENT SPECIFIC)
VARIOUS BRIDGES ON INTERSTATE 481
TOWNS OF DEWITT AND CICERO
ONONDAGA COUNTY
P.I.N. 305613 B.I.N. 1093672

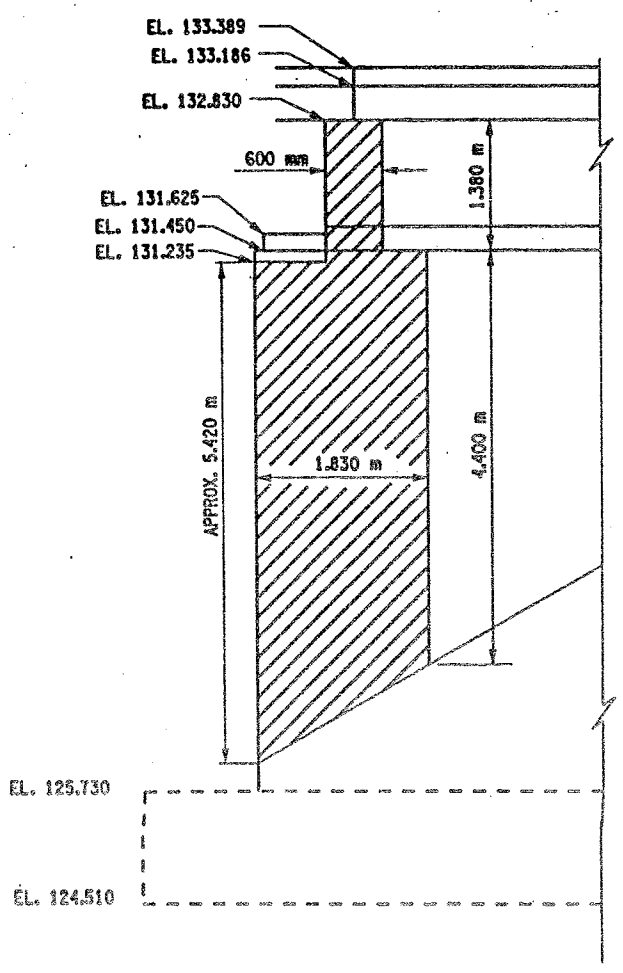

SECTION B-B
APPROXIMATE AREAS OF REPAIRS
SCALE 1:40

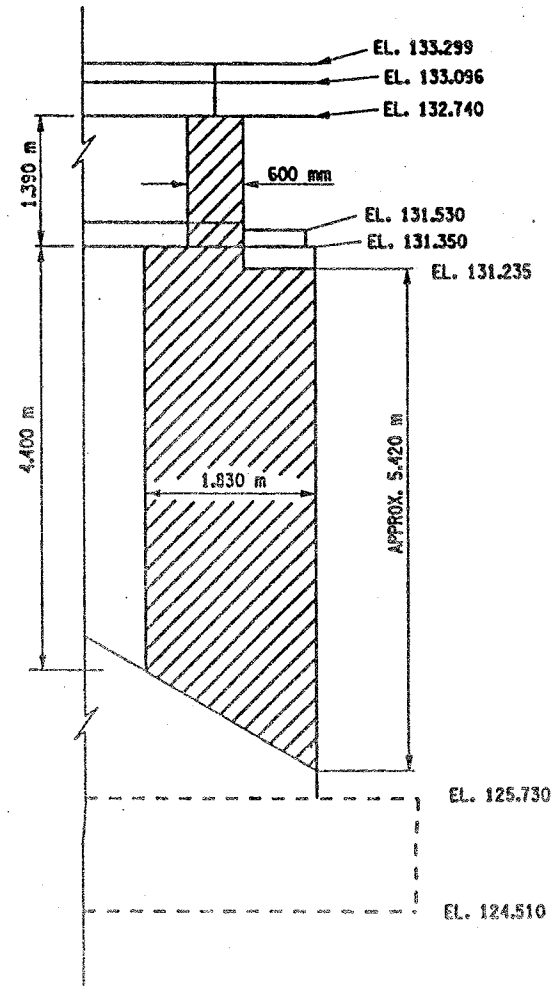

SECTION A-A
APPROXIMATE AREAS OF REPAIRS
SCALE 1:40

NOTES:

1. ALL DIMENSIONS SHOWN FOR CONCRETE REMOVAL ARE APPROXIMATE AND SHALL BE FIELD VERIFIED BY THE CONTRACTOR AND EIC.
2. REMOVE CONCRETE TO LIMITS SHOWN AS WELL AS TO SOUND CONCRETE, A.O.B.E.
3. WHEN REMOVING EXISTING CONCRETE, SAWCUT 5 mm MIN. TO PRODUCE NEAT REMOVAL LINES. ANY COST TO BE INCLUDED IN THE BID PRICE FOR ITEM 582.05M.
4. ALL EXISTING REINFORCEMENT TO REMAIN.
5. ELEVATIONS ARE GIVEN FOR QUANTITY ESTIMATES ONLY.
6. REFER TO CONTRACT FISH 70-7 FOR ORIGINAL CONSTRUCTION DETAILS AND D251436 FOR ADDITIONAL DETAILS.
7. 100 mm X 250 mm RECESS SHALL BE RESTORED TO ORIGINAL DIMENSIONS.

AREAS OF PROPOSED WORK: ITEM 582.05M REMOVAL OF STRUCTURAL CONCRETE-REPLACEMENT WITH CLASS A CONCRETE

LIST OF ITEMS USED:

ITEM 582.05M - REMOVAL OF STRUCTURAL CONCRETE-REPLACEMENT WITH CLASS A CONCRETE (CM)

ALL DIMENSIONS ARE IN m UNLESS OTHERWISE NOTED

AS BUILT REVISIONS

SIGNATURE DATE

INTERSTATE 481 NB
OVER
KIRKVILLE ROAD
SOUTH ABUTMENT
SECTIONS

STATE OF NEW YORK
DEPARTMENT OF TRANSPORTATION

FILENAME	REGION	DATE	DRAWING NO.
305613AL.A18	3	10/02	AB18-5

DESIGN SUPERVISOR ____ JOB MANAGER ____ DESIGNED BY ____ CHECKED BY ____ ESTIMATED BY ____ DRAFTED BY ____ CHECKED BY ____

FED ROAD REG. NO.	STATE	CONTRACT NO.	SHEET NO.	TOTAL SHEETS
1	N.Y.	D259214	340	432

BRIDGE REHABILITATION PROJECT (ELEMENT SPECIFIC)
VARIOUS BRIDGES ON INTERSTATE 481
TOWNS OF DEWITT AND CICERO
ONONDAGA COUNTY
P.I.N. 305613 B.I.N. 1093672

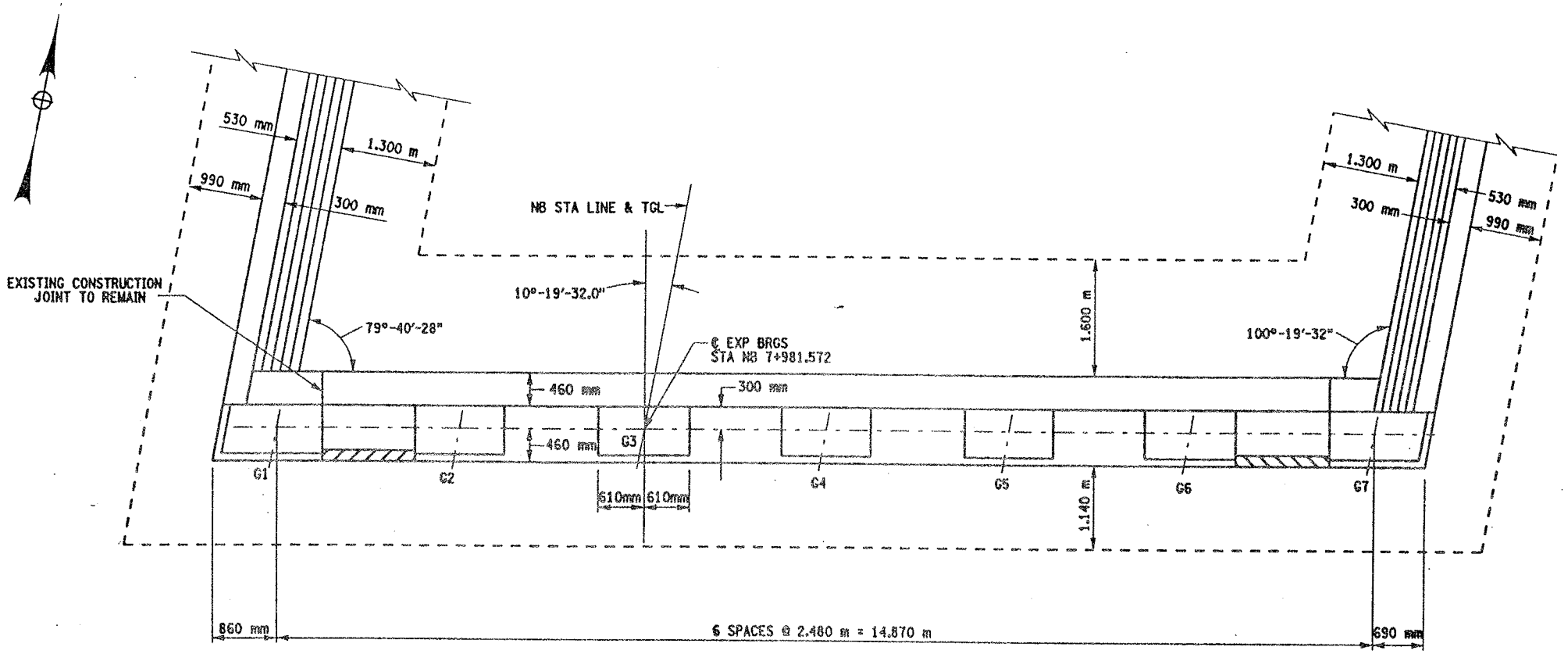

NORTH ABUTMENT
PLAN
SCALE 1:40

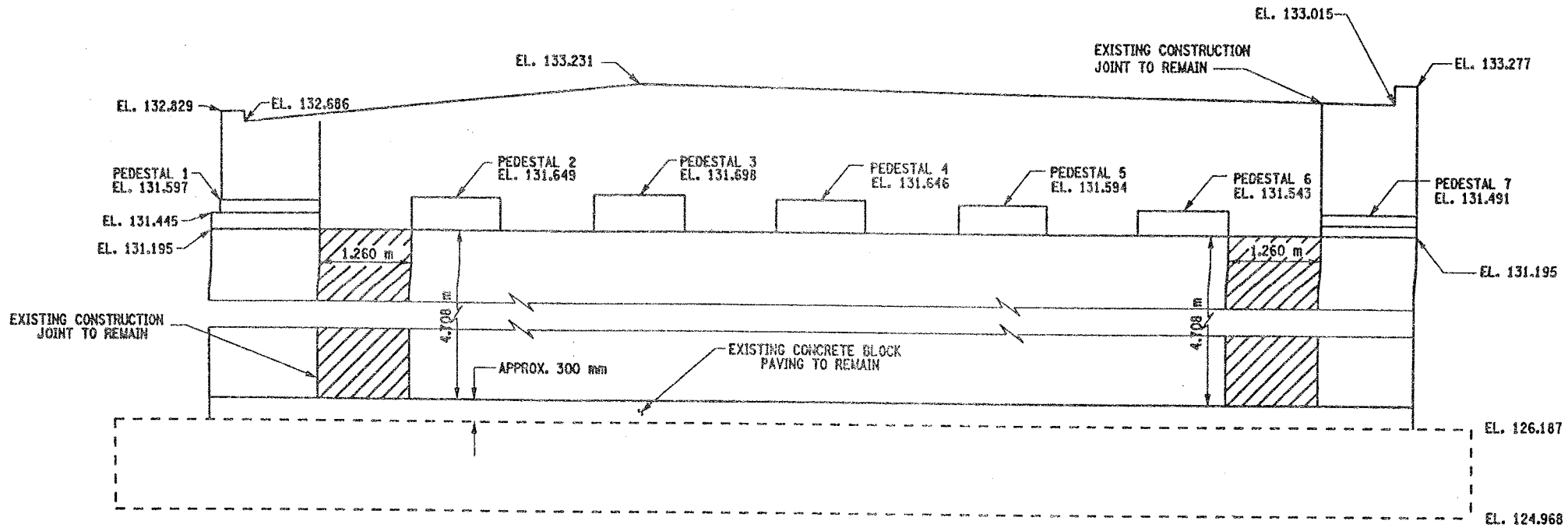

ELEVATION
SCALE 1:40

NOTES:

1. ALL DIMENSIONS SHOWN FOR CONCRETE REMOVAL ARE APPROXIMATE AND SHALL BE FIELD VERIFIED BY THE CONTRACTOR AND EIC.
2. REMOVE CONCRETE TO LIMITS SHOWN AS WELL AS TO SOUND CONCRETE, A.O.B.E.
3. WHEN REMOVING EXISTING CONCRETE, SAWCUT 5 mm MIN. TO PRODUCE NEAT REMOVAL LINES. ANY COST TO BE INCLUDED IN THE BID PRICE FOR ITEM 582.05M.
4. ALL EXISTING REINFORCEMENT TO REMAIN.
5. ELEVATIONS ARE GIVEN FOR QUANTITY ESTIMATES ONLY.
6. REFER TO CONTRACT FISH 70-7 FOR ORIGINAL CONSTRUCTION DETAILS AND D251436 FOR ADDITIONAL DETAILS.
7. FOR REMOVAL DETAIL SEE DWG. AB18-2

AREAS OF PROPOSED WORK: ITEM 582.05M REMOVAL OF STRUCTURAL CONCRETE- REPLACEMENT WITH CLASS A CONCRETE

LIST OF ITEMS USED:

ITEM 582.05M - REMOVAL OF STRUCTURAL CONCRETE- REPLACEMENT WITH CLASS A CONCRETE (CM)

ALL DIMENSIONS ARE IN m UNLESS OTHERWISE NOTED

AS BUILT REVISIONS

SIGNATURE DATE

INTERSTATE 481 NB
OVER
KIRKVILLE ROAD

NORTH ABUTMENT PLAN AND ELEVATION

STATE OF NEW YORK
DEPARTMENT OF TRANSPORTATION

FILENAME	REGION	DATE	DRAWING NO.
305613AL.A18	3	10/02	AB18-6

DESIGN SUPERVISOR ____ JOB MANAGER ____ DESIGNED BY ____ DRAFTED BY ____ ESTIMATED BY ____ CHECKED BY ____ CHECKED BY

BIN 1093672
Interstate 481 NB over Kirkville Road
Town of Dewitt, Onondaga County

Bridge Deck Replacement Information

BIN:	1093672
Feature Carried:	I-481 NB
Feature Crossed:	Krikville Road
Original Contract Number:	FISH 70-7
Secondary Contract Number:	None

Geometry

Bridge Length from Bridge Begins to Bridge Ends (ft):	115.56
Existing Bridge Width (ft):	54
Existing Curb to Curb / Face of Rail to Face of Rail (ft):	51
Assumed Existing Total Deck Thickness (in):	9.75
Proposed Bridge Width (ft):	55.00
Proposed Curb to Curb / Face of Rail to Face of Rail (ft):	52
Number of Spans:	1
Length of Each Span, CL of Brgs to CL of Brgs (ft):	113.5
Skew Angle:	10.2125
Proposed Deck Thickness (in):	8.5
Begin Approach Slab Length (ft):	46.5
Begin Approach Slab Width (ft):	55
End Approach Slab Length (ft):	41.5
End Approach Slab Width (ft):	55

(The ends of both approach slabs are parallel to the centerline of bearings unless otherwise shown on a detail. The length of the approach slab is measured parallel to the station line. The width is measured perpendicular to the station line.)

Superstructure

Number of Girders in Transverse Section:	7
Girder Type:	Steel
Center to Center Girder Spacing (ft):	8
Left Overhang - center of girder to edge of deck (ft):	3.50
Right Overhang - center of girder to edge of deck (ft):	3.50
Width of Left Brush Curb or Sidewalk (ft) (Width of the curb is not included):	0.00
Width of Right Brush Curb or Sidewalk (ft) (Width of the curb is not included):	0.00
Type of Shear Connectors:	Studs
Number of Studs on Girder Flange Transversely by row:	3
Longitudinal Spacing of Rows of Studs (in):	6
Scuppers:	None

Staging

Staging Diagram:	Full Closure
"A" Dimension (ft)	Not Applicable
"B" Dimension (ft)	Not Applicable
"C" Dimension (ft)	Not Applicable
"D" Dimension (ft)	Not Applicable
"E" Dimension (ft)	Not Applicable
"F" Dimension (ft)	Not Applicable
"G" Dimension (ft)	Not Applicable
Number of Girders in Stage 1 Transverse Section:	5
Number of Girders in Stage 2 Transverse Section:	Not Applicable

Superstructure Slab Reinforcement

Deck Reinforcement Design to be Provided:	Traditional
Type of Reinforcement to be Provided:	Epoxy Coated Steel
Top Transverse Bar Size:	#5
Top Transverse Bar Max. Spacing (in):	6
Bottom Transverse Bar Size:	#5
Bottom Transverse Bar Max. Spacing (in):	6
Top Longitudinal Bar Size:	#5
Top Longitudinal Bar Max. Spacing (in):	18
Bottom Longitudinal Bar Size:	#5
Bottom Longitudinal Bar Max. Spacing (in):	9
Additional Top Overhang Reinforcement:	#5 @ 6"
Additional Top Overhang Reinforcement Required for Stage 1 Overhang?	Not Applicable
Additional Top Overhang Reinforcement Required for Stage 2 Overhang?	Not Applicable
Additional Negative Moment Reinforcement:	Not Applicable
Locations of points of dead load contraflexure:	Not Applicable

(Additional negative moment reinforcement shall be required on all continuous spans. The additional reinforcement shall be placed in the top mat to a point 2'-6" beyond the points of dead load contraflexure on either side of the pier.

Approach Slab Reinforcement

Top Transverse Bar Size:	#5
Top Transverse Bar Max. Spacing (in):	8
Bottom Transverse Bar Size:	#5
Bottom Transverse Bar Max. Spacing (in):	8
Top Longitudinal Bar Size:	#5
Top Longitudinal Bar Max. Spacing (in):	8
Bottom Longitudinal Bar Size:	#5
Bottom Longitudinal Bar Max. Spacing (in):	8

(See BD Sheet SA1R1 and SA3E for corner reinforcement details with steel railings)

Begin Approach Sleeper Slab Detail:	No Sleeper Slab Required
End Approach Sleeper Slab Detail:	Sleeper Slab Detail (See Detail)

(If required, the Sleeper Slab Detail is provided in the proposal.)

Minimum Lap Lengths for Superstructure Slabs, Approach Slabs, and Barriers.

#4 bar - 1'-9"
#5 bar - 2'-2"
#6 bar - 2'-10"
#7 bar - 4'-9"

Railing/Barrier

Bridge Railing/ Barrier Type (Left): Concrete Single Slope

Bridge Railing/Barrier Type (Right): Concrete Single Slope

Pedestrian Fence Required? No

(When required Pedestrian Fence shall be used for the whole length of the bridge.)

Snow Fence Required? No

(When Snow Fence is required it shall only be used at locations to protect the under roadway.)

Joint Details

Required Joint Detail at Begin Abutment: Backwall Detail for Precast (See Fixed Detail)

Total Movement at Begin Abutment or Begin Sleeper Slab (in): Not Applicable

Required Joint Detail at Pier(s): Not Applicable

Total Movement at Pier (in): Not Applicable

Required Joint Detail at End Abutment: Backwall Detail for Precast (See Fixed Detail)

Total Movement at End Abutment or End Approach Slab (in): 1.47

(If an armorless joint is required, then the contractor shall choose a joint opening using the table on BD-JT1E. The seal type shall be determined by the contractor and the total movement is provided.)

PRECAST CONCRETE DETAILS

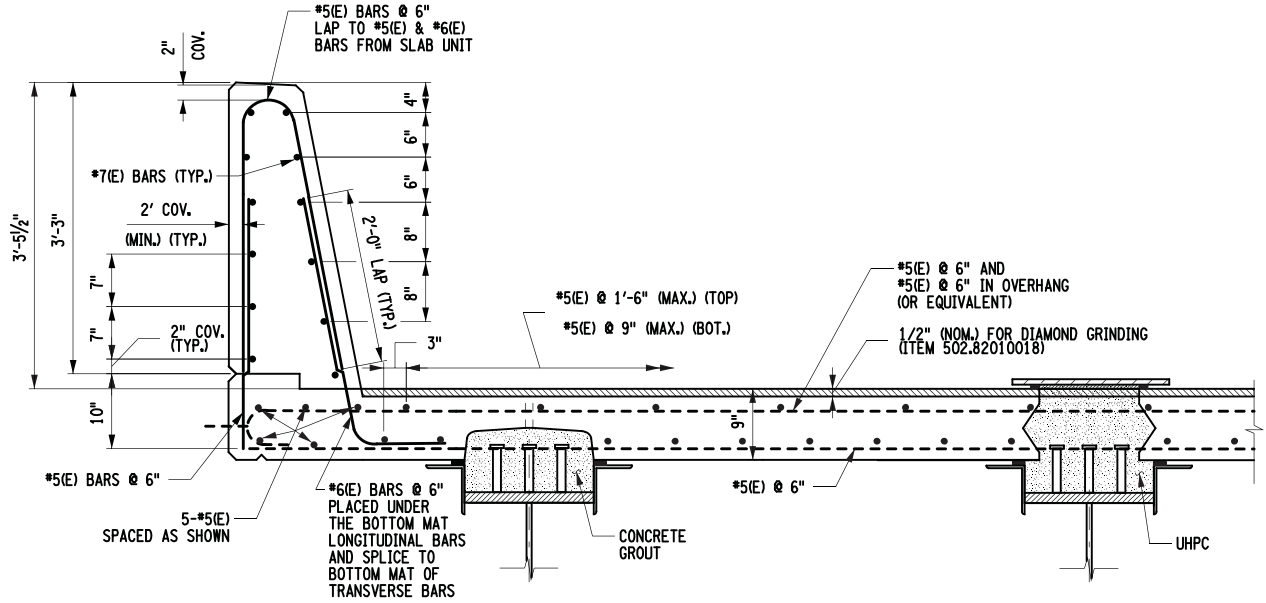

PRECAST BARRIER ON PRECAST BRIDGE DECK PANEL

NOTE: PANEL JOINT LOCATION SHOWN IS FOR ILLUSTRATIVE PURPOSES ONLY. ACTUAL JOINT LOCATION SHALL BE DETERMINED BY THE FABRICATOR.

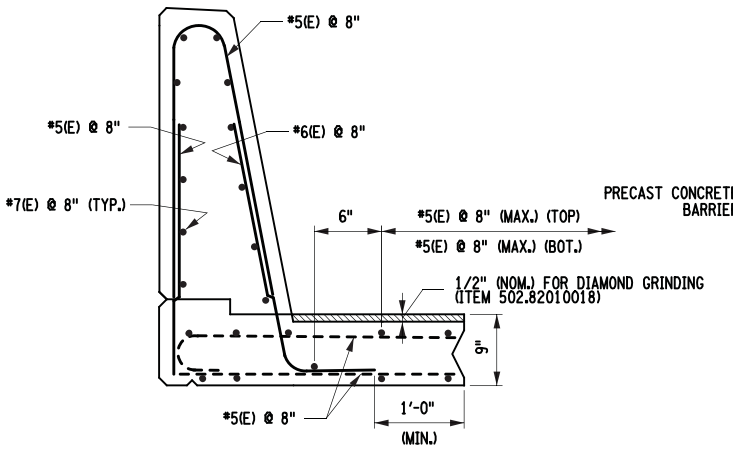

PRECAST BARRIER ON PRECAST APPROACH SLAB PANEL

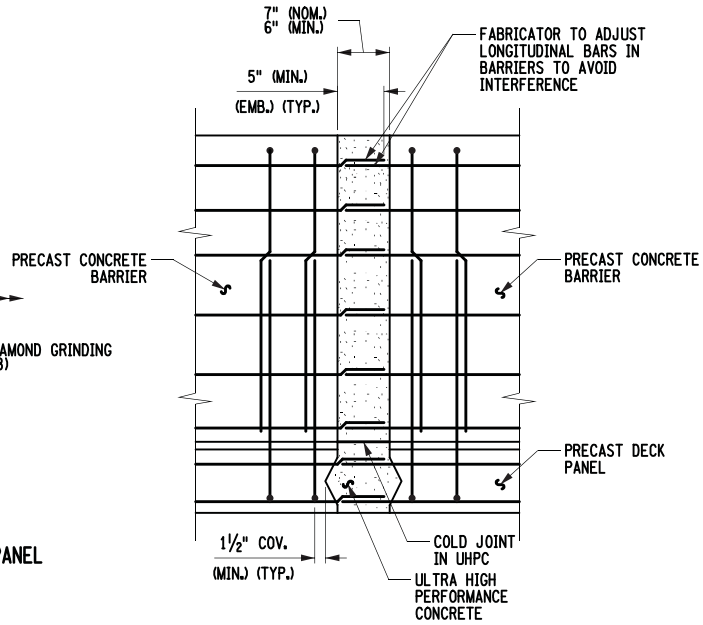

ELEVATION
TYPICAL UHPC BARRIER JOINT

NOTES:

FINAL COVER FOR STEEL REINFORCEMENT IN PRECAST PANELS SHALL BE 2" (MIN.) FOR TOP MAT AND 1½" FOR BOTTOM MAT.

(E) - DENOTES EPOXY COATED REINFORCEMENT

FOR OVERALL BARRIER DIMENSIONS, SEE THE "SINGLE SLOPE BARRIER" DETAILS IN THE APPROPRIATE BD'S.

THE SIZE AND NUMBER OF STUD SHEAR CONNECTORS VARIES. SEE BIN SPECIFIC CONTRACT DOCUMENTS FOR INFORMATION.

THE UHPC JOINTS IN THE BARRIER SHALL BE SMOOTH AND FLUSH WITH THE BARRIER SURFACE.

PRECAST CONCRETE DETAILS

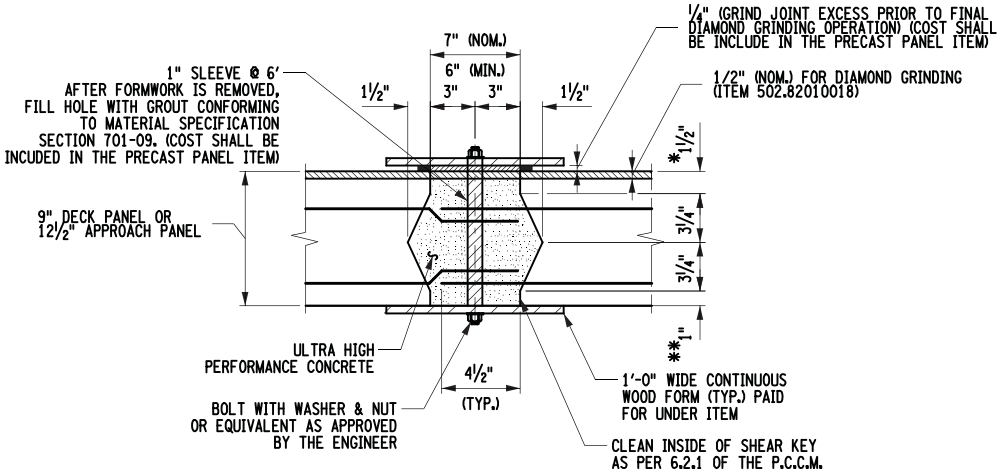

TYPICAL UHPC JOINT DETAIL

*THIS DIMENSION SHALL BE 3½" FOR UHPC JOINTS IN APPROACH PANELS

**THIS DIMENSION SHALL BE 2½" FOR UHPC JOINTS IN APPROACH PANELS

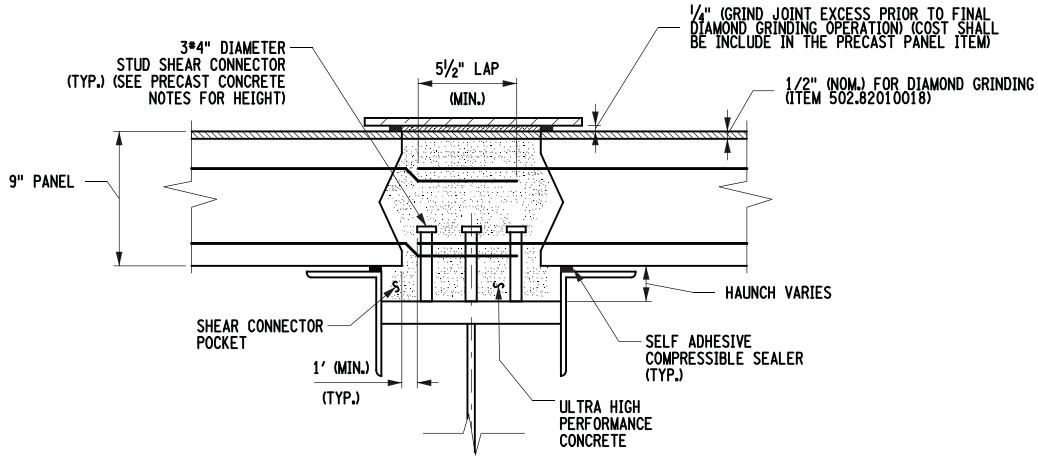

LONGITUDINAL UHPC JOINT OVER GIRDER DETAIL

NOTES:

FINAL COVER FOR STEEL REINFORCEMENT IN PRECAST PANELS SHALL BE 2" (MIN.) FOR TOP MAT AND 1½" FOR BOTTOM MAT.

THE SIZE AND NUMBER OF STUD SHEAR CONNECTORS VARIES. SEE BIN SPECIFIC CONTRACT DOCUMENTS FOR INFORMATION.

PRECAST CONCRETE DETAILS

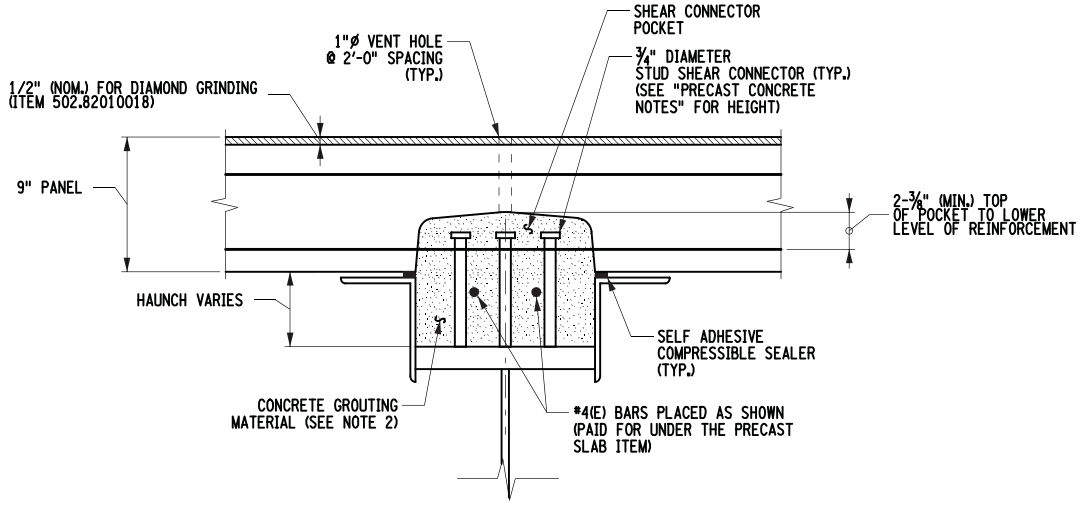

SHEAR CONNECTOR POCKET DETAIL HAUNCH ≥ 6"

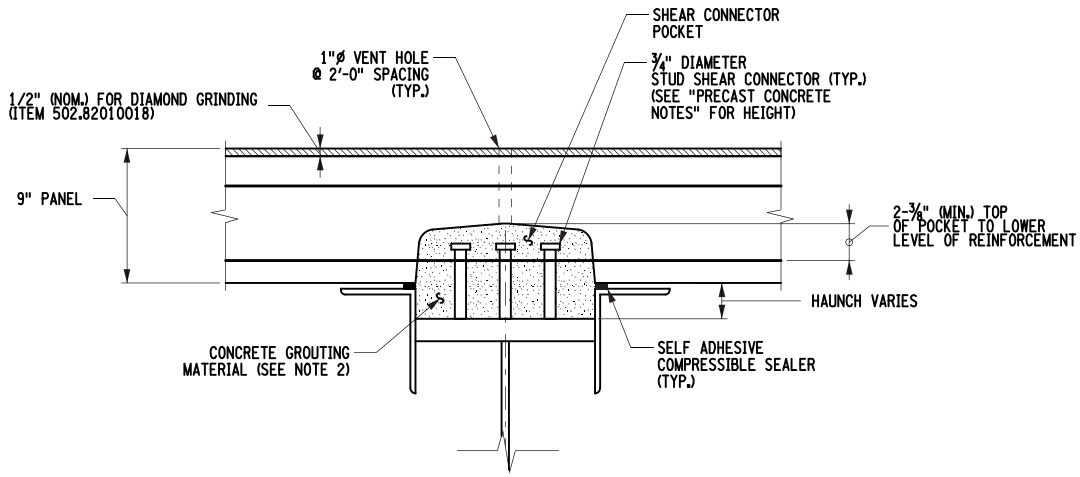

SHEAR CONNECTOR POCKET DETAIL W/HAUNCH

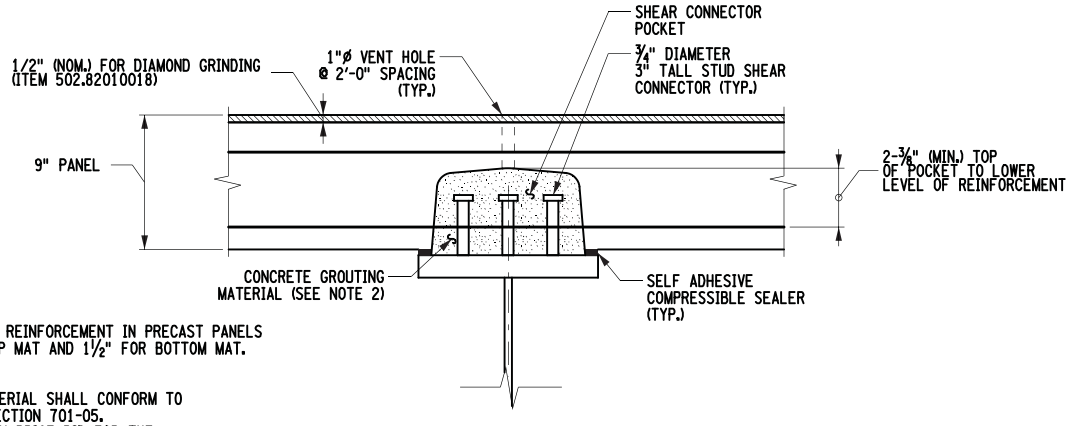

SHEAR CONNECTOR POCKET DETAIL W/O HAUNCH

NOTES:

1. FINAL COVER FOR STEEL REINFORCEMENT IN PRECAST PANELS SHALL BE 2" (MIN.) FOR TOP MAT AND 1½" FOR BOTTOM MAT.

2. CONCRETE GROUTING MATERIAL SHALL CONFORM TO MATERIAL SPECIFICATION SECTION 701-05. COST SHALL BE INCLUDED IN PRICE BID FOR THE DECK PANEL ITEM.

3. THE SIZE AND NUMBER OF STUD SHEAR CONNECTORS VARIES. SEE BIN SPECIFIC CONTRACT DOCUMENTS FOR INFORMATION.

PRECAST CONCRETE DETAILS

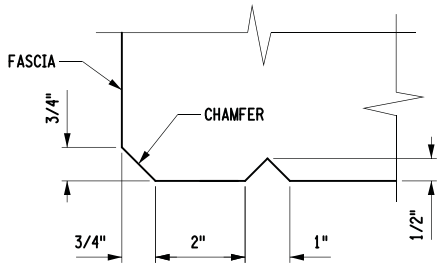

DRIP GROOVE DETAIL

NOTE:

DRIP GROOVE TO END 3' FROM FACES OF ABUTMENTS WITH A 90° TURN TOWARD FASCIA. GROOVE CONTINUES TO INTERSECTION WITH THE CHAMFER.

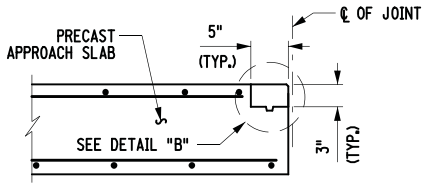

HEADER DETAIL IN PRECAST PANEL FOR JOINT LOCATIONS (PAID FOR UNDER ITEM 567.60)

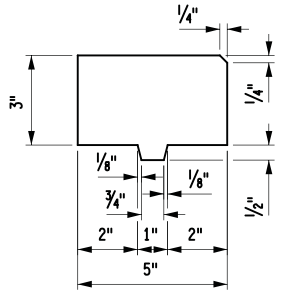

DETAIL "B"
ELASTOMERIC CONCRETE HEADER

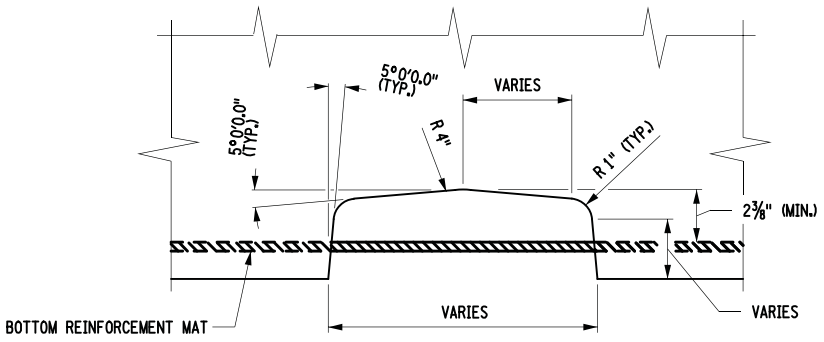

SHEAR CONNECTOR POCKET DETAIL

BACKWALL DETAIL FOR PRECAST

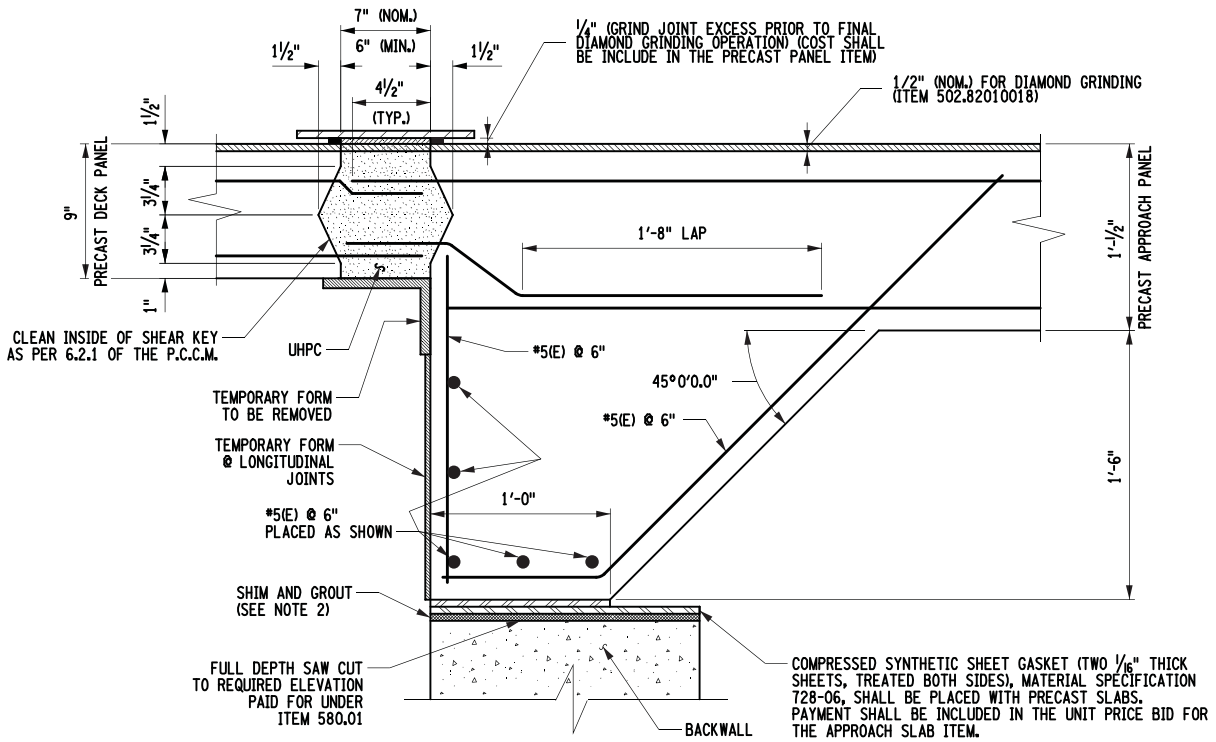

UHPC BACKWALL FIXED JOINT DETAIL

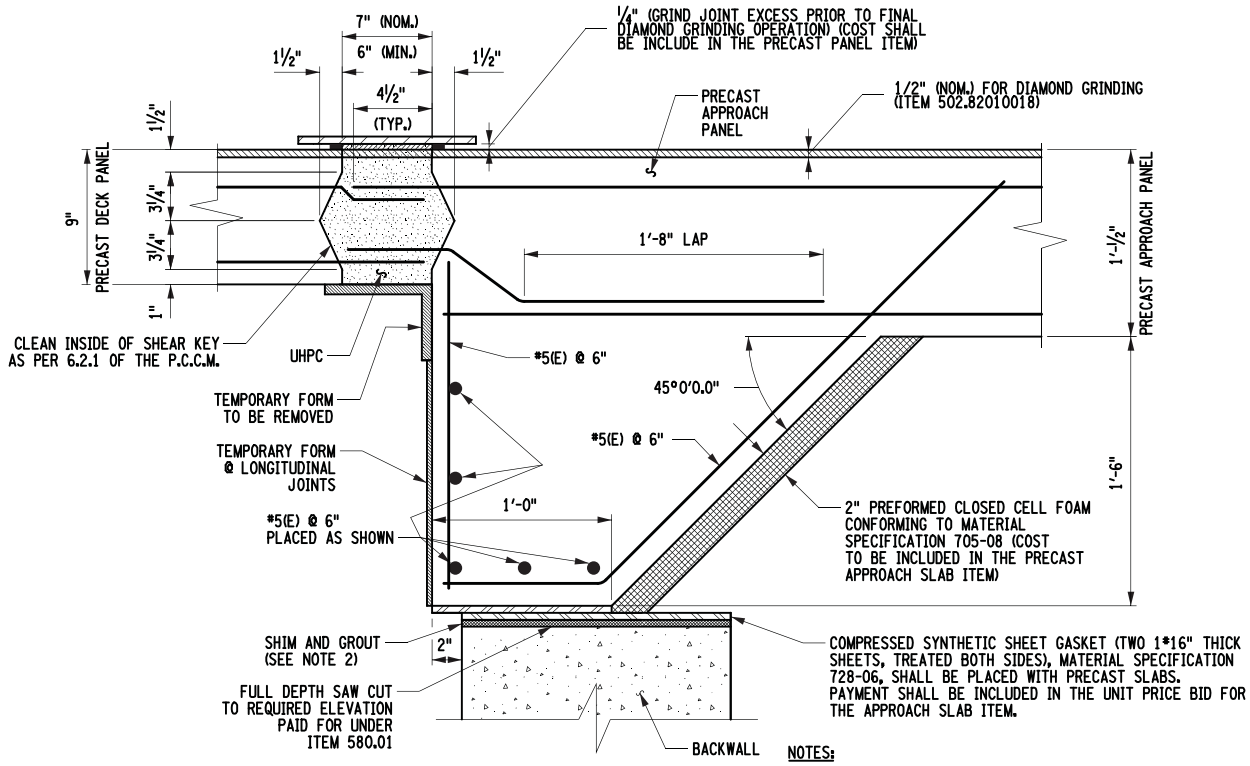

UHPC BACKWALL EXPANSION JOINT DETAIL

NOTES:

1. FINAL COVER FOR STEEL REINFORCEMENT IN PRECAST PANELS SHALL BE 2" (MIN.) FOR TOP MAT AND 1½" FOR BOTTOM MAT.

2. CONCRETE GROUTING MATERIAL SHALL CONFORM TO MATERIAL SPECIFICATION SECTION 701-06. COST SHALL BE INCLUDED IN PRICE BID FOR THE DECK PANEL ITEM.

PRECAST CONCRETE DETAILS

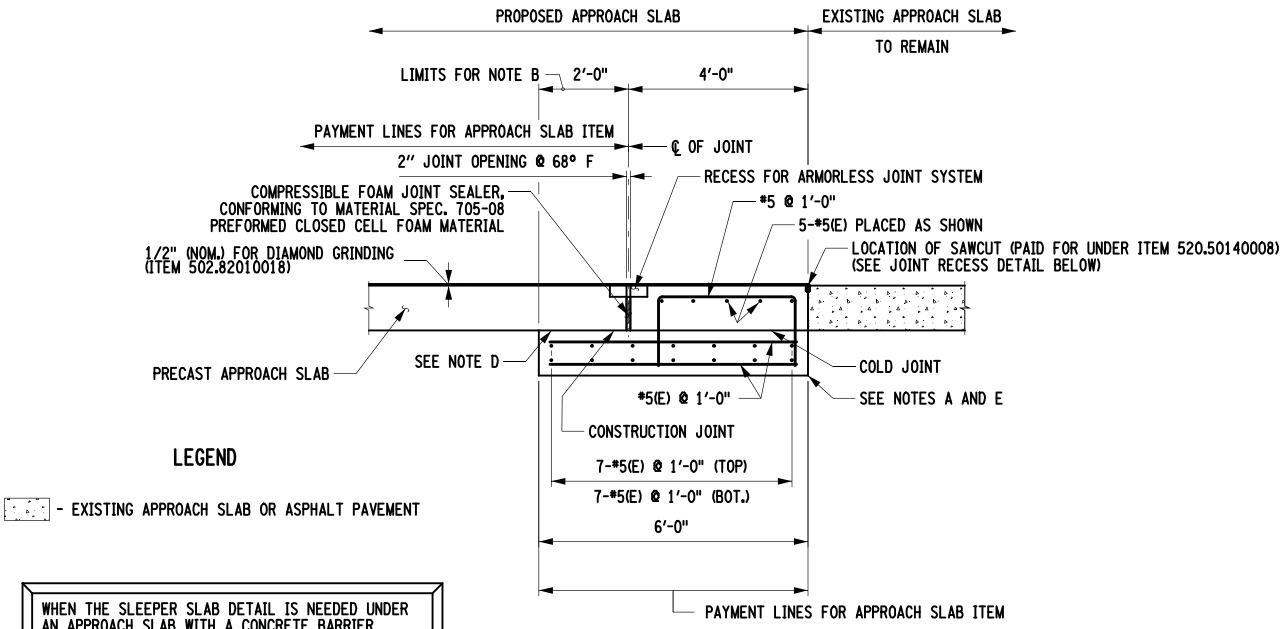

WHEN THE SLEEPER SLAB DETAIL IS NEEDED UNDER AN APPROACH SLAB WITH A CONCRETE BARRIER ATTACHED TO IT, THE SLEEPER SLAB SHALL BE FROM FACE OF BARRIER TO FACE OF BARRIER.

PRECAST SLEEPER SLAB DETAIL

NOTES:

A. EXCAVATION FOR SLEEPER SLABS SHALL BE CAREFULLY MADE AFTER COMPACTED ABUTMENT EMBANKMENT IS IN PLACE. THE SLEEPER SLABS SHALL BE FOUNDED ON UNDISTURBED COMPACT MATERIAL OR RE-COMPACTED MATERIAL. NO LOOSE BACKFILL SHALL BE ALLOWED. THE CONTRACTOR SHALL TAKE ALL NECESSARY PRECAUTIONS TO PROTECT THE SLEEPER SLAB FROM TEMPORARY LOADINGS OR ANY CONDITION WHICH COULD CAUSE MOVEMENTS OR UNEVEN SETTLEMENT OF THE SLEEPER SLAB.

B. TOP OF SLEEPER SLABS SHALL BE STEEL TROWEL FINISHED AND COATED WITH A 0.04 in. NOMINAL THICKNESS OF PERFORMANCE GRADE ASPHALT AS INDICATED IN THE PROPOSAL, OR MATERIAL SPECIFICATION 702-3101. THE TOP OF SLEEPER SLABS SHALL FOLLOW THE CROSS SLOPE AND GRADE OF ROADWAY. COST TO BE INCLUDED IN THE UNIT PRICE BID FOR THE APPROACH SLAB ITEM.

C. PAYMENT FOR THE ELASTOMERIC CONCRETE HEADERS SHALL BE INCLUDED IN THE ITEM FOR THE JOINT SYSTEM. THE JOINT SYSTEM SHALL BE PAID FOR UNDER ITS APPROPRIATE ITEM.

D. COMPRESSED SYNTHETIC SHEET GASKET, MATERIAL SPECIFICATION 728-06 (TWO 1/16" THICK SHEETS. TREATED BOTH SIDES) SHALL BE PLACED WITH PRECAST UNITS. SHIM AND GROUT AS CALLED FOR ON THE BACKWALL DETAILS. PRICE WILL BE INCLUDED IN THE UNIT PRICE BID FOR THE APPROACH SLAB ITEM.

E. PAYMENT FOR SLEEPER SLAB EXCAVATION SHALL BE INCLUDED IN THE APPROACH SLAB ITEM.

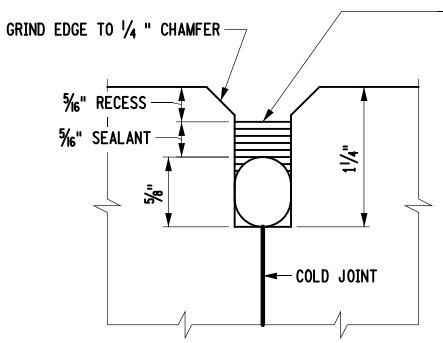

FILL THE RECESS WITH A STRUCTURAL JOINT MATERIAL, SILICONE SEALANT, FROM THE DEPARTMENT'S APPROVED LIST FOR ITEM 567.51--16. IF THE RECESS IS SAW CUT, WATER BLAST IMMEDIATELY FOLLOWING CUTTING TO REMOVE ANY RESIDUAL SLURRY BEFORE IT DRIES. CLEAN THE VERTICAL FACES OF THE RECESS BY ABRASIVE BLAST AND AIR BLOW THE RESIDUE FROM THE RECESS. PRIME THE VERTICAL FACES WITH THE MANUFACTURER'S RECOMMENDED PRIMER, AND ALLOW TO DRY. PLACE A 5/8" DIA. SOFT CLOSED CELL BACKER ROD IN THE BOTTOM OF RECESS. POUR THE SILICONE SEALANT TO A DEPTH OF APPROX. 5/16". PAYMENT TO BE INCLUDED IN THE UNIT PRICE BID FOR THE APPROACH SLAB.

JOINT RECESS DETAIL
(AT SAWCUT LOCATION)

PRECAST CONCRETE DETAILS

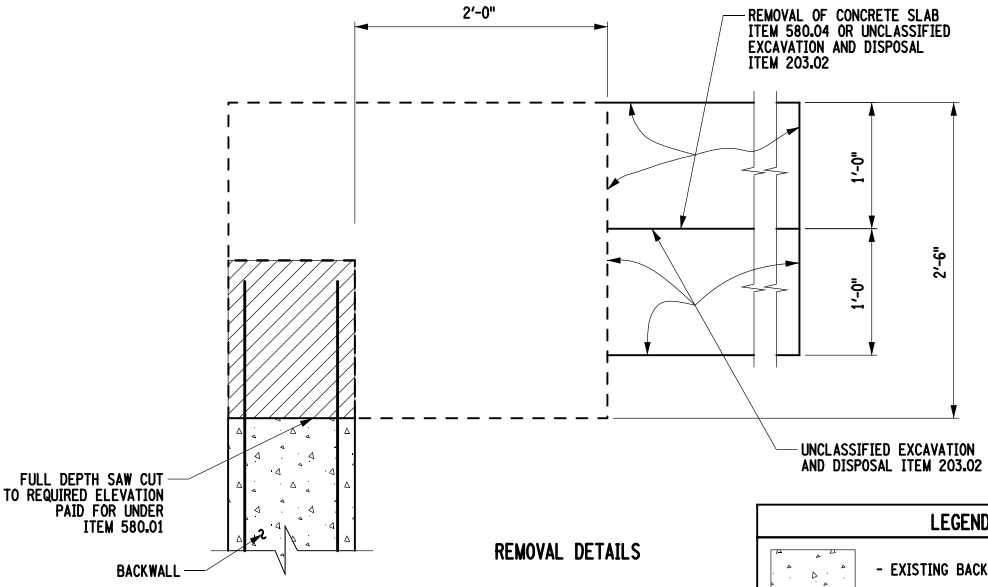

REMOVAL DETAILS

LEGEND

- EXISTING BACKWALL
- AREAS ENCLOSED WITHIN THESE LINES DESIGNATES PAY LIMITS FOR STRUCTURE EXCAVATION ITEM 206.01
- SELECT STRUCTURE FILL ITEM (203.21) COMPACTED TO 95% OF STANDARD PROCTOR MAXIMUM DENSITY
- SUBBASE COURSE (ITEM 304.12)
- REMOVAL OF STRUCTURAL CONCRETE (ITEM 580.01)

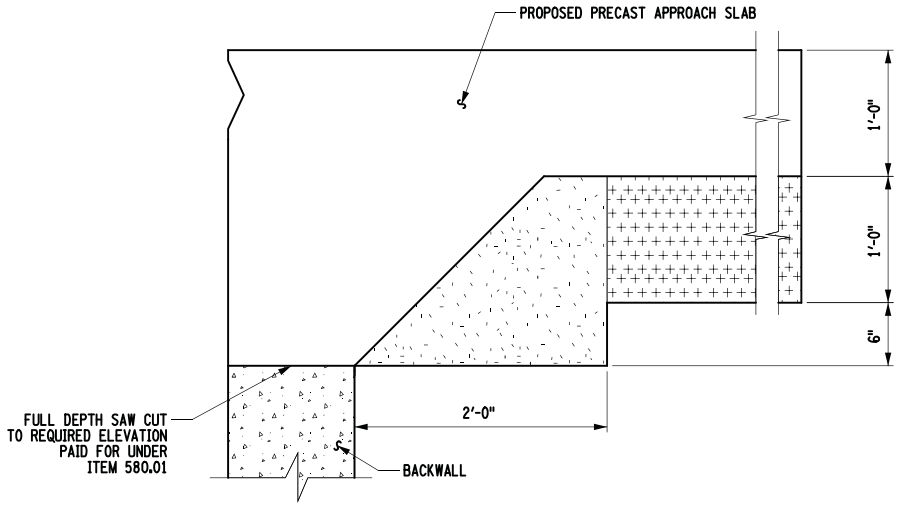

EARTHWORK DETAILS

NOTE:

SEE BACKWALL JOINT DETAILS FOR TOP OF BACKWALL TREATMENT AND EXPANSION CLOSED CELL FOAM DETAILS

PROPOSED APPROACH SLAB ON EXISTING U-WALL WITH OVERHANG

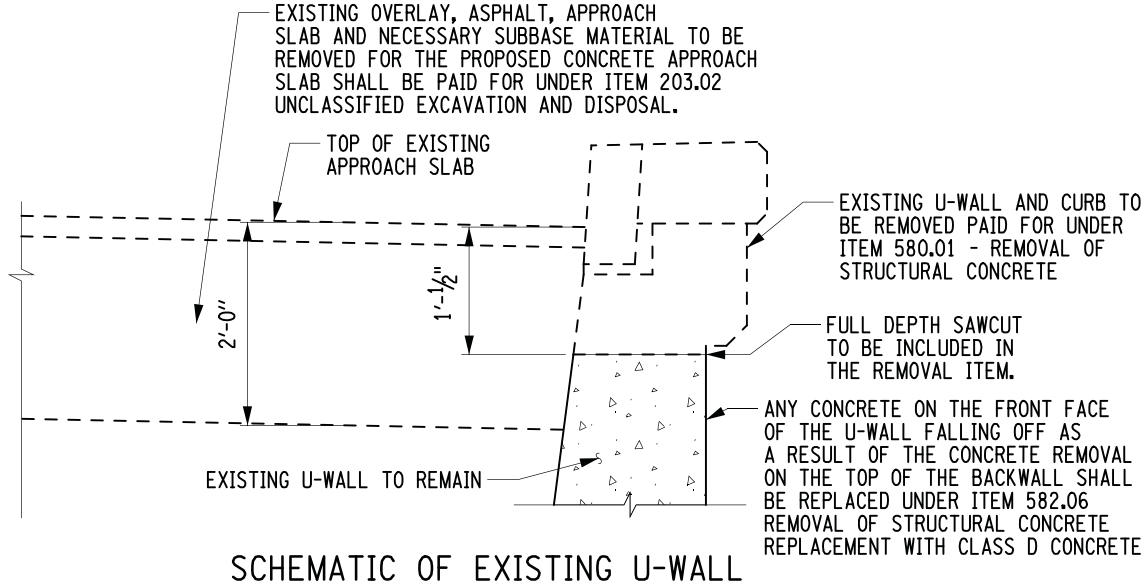

SCHEMATIC OF EXISTING U-WALL

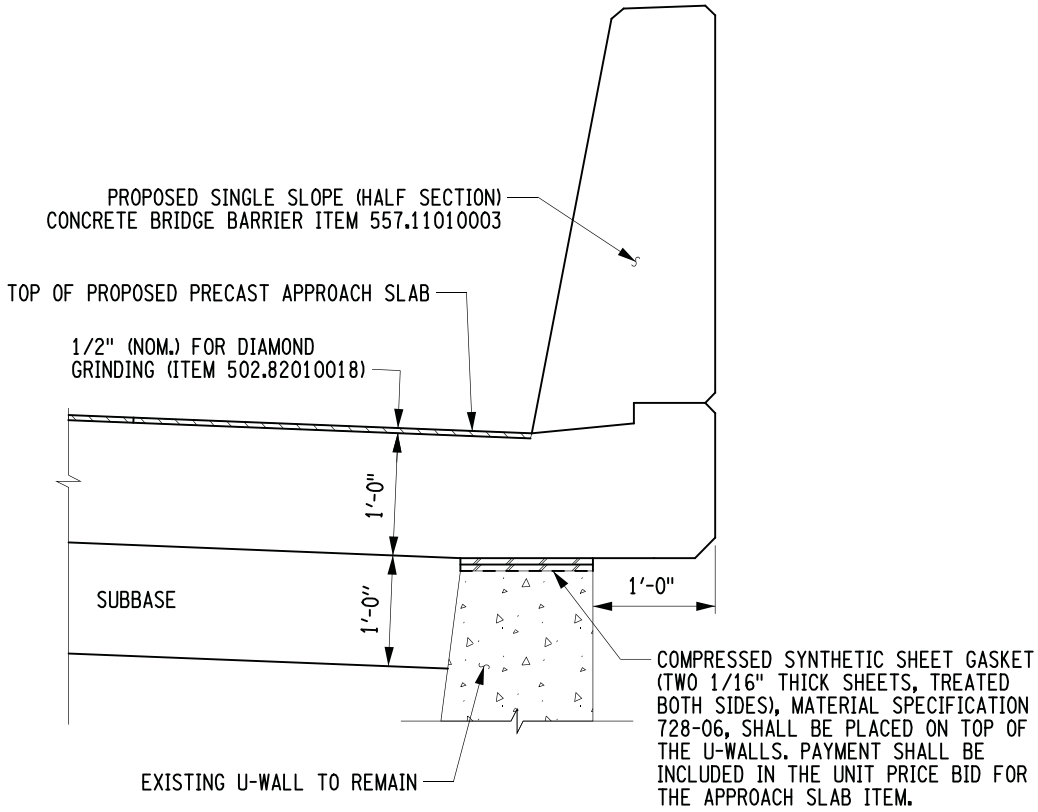

PROPOSED APPROACH SLAB ON EXISTING U-WALL

NOTES:
FOR SINGLE SLOPE CONCRETE BARRIER DETAILS, SEE BD'S RC-11E, RC-12E & RC-13E.

I-481 NB OVER KIRKVILLE ROAD

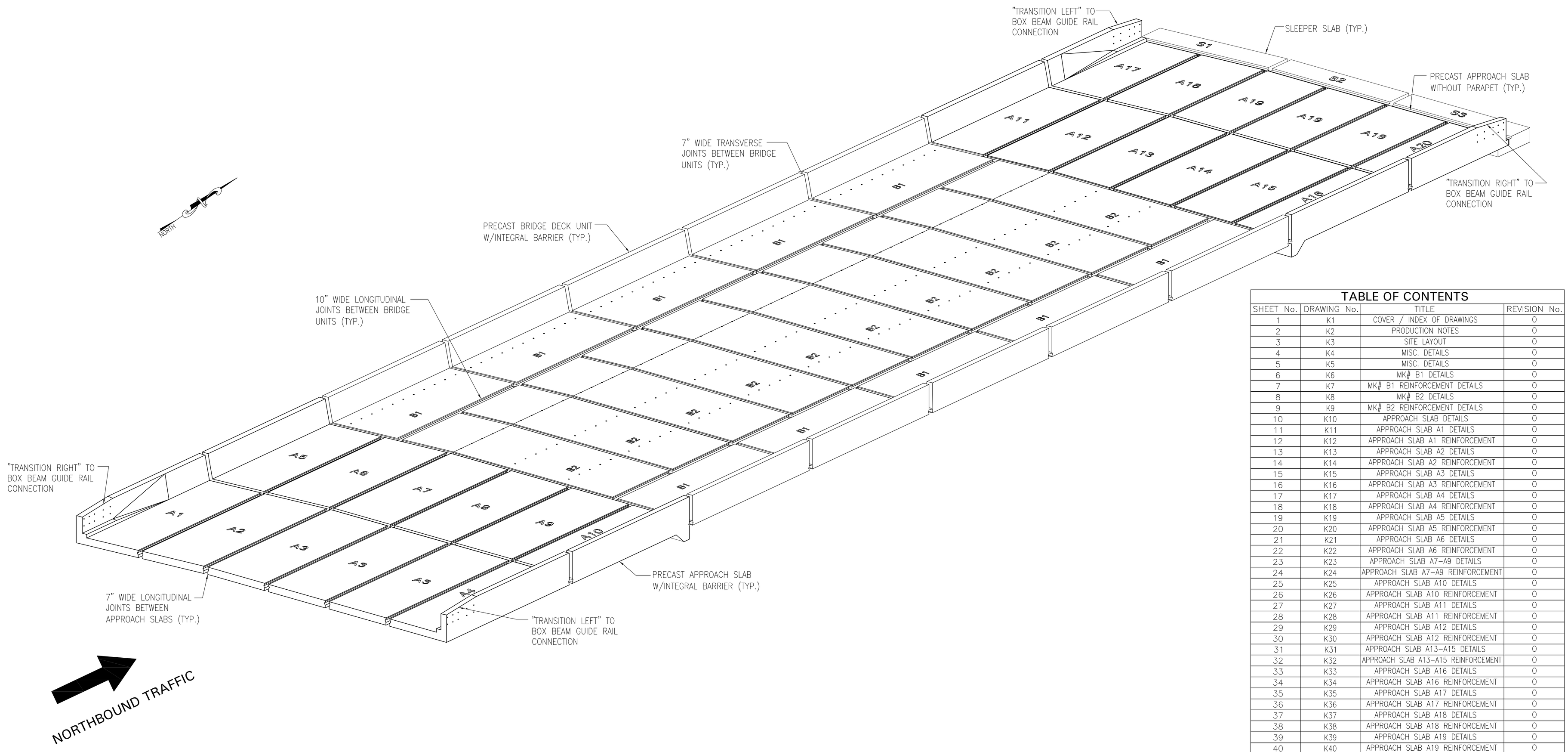

TABLE OF CONTENTS

SHEET No.	DRAWING No.	TITLE	REVISION No.
1	K1	COVER / INDEX OF DRAWINGS	0
2	K2	PRODUCTION NOTES	0
3	K3	SITE LAYOUT	0
4	K4	MISC. DETAILS	0
5	K5	MISC. DETAILS	0
6	K6	MK# B1 DETAILS	0
7	K7	MK# B1 REINFORCEMENT DETAILS	0
8	K8	MK# B2 DETAILS	0
9	K9	MK# B2 REINFORCEMENT DETAILS	0
10	K10	APPROACH SLAB DETAILS	0
11	K11	APPROACH SLAB A1 DETAILS	0
12	K12	APPROACH SLAB A1 REINFORCEMENT	0
13	K13	APPROACH SLAB A2 DETAILS	0
14	K14	APPROACH SLAB A2 REINFORCEMENT	0
15	K15	APPROACH SLAB A3 DETAILS	0
16	K16	APPROACH SLAB A3 REINFORCEMENT	0
17	K17	APPROACH SLAB A4 DETAILS	0
18	K18	APPROACH SLAB A4 REINFORCEMENT	0
19	K19	APPROACH SLAB A5 DETAILS	0
20	K20	APPROACH SLAB A5 REINFORCEMENT	0
21	K21	APPROACH SLAB A6 DETAILS	0
22	K22	APPROACH SLAB A6 REINFORCEMENT	0
23	K23	APPROACH SLAB A7-A9 DETAILS	0
24	K24	APPROACH SLAB A7-A9 REINFORCEMENT	0
25	K25	APPROACH SLAB A10 DETAILS	0
26	K26	APPROACH SLAB A10 REINFORCEMENT	0
27	K27	APPROACH SLAB A11 DETAILS	0
28	K28	APPROACH SLAB A11 REINFORCEMENT	0
29	K29	APPROACH SLAB A12 DETAILS	0
30	K30	APPROACH SLAB A12 REINFORCEMENT	0
31	K31	APPROACH SLAB A13-A15 DETAILS	0
32	K32	APPROACH SLAB A13-A15 REINFORCEMENT	0
33	K33	APPROACH SLAB A16 DETAILS	0
34	K34	APPROACH SLAB A16 REINFORCEMENT	0
35	K35	APPROACH SLAB A17 DETAILS	0
36	K36	APPROACH SLAB A17 REINFORCEMENT	0
37	K37	APPROACH SLAB A18 DETAILS	0
38	K38	APPROACH SLAB A18 REINFORCEMENT	0
39	K39	APPROACH SLAB A19 DETAILS	0
40	K40	APPROACH SLAB A19 REINFORCEMENT	0
41	K41	APPROACH SLAB A20 DETAILS	0
42	K42	APPROACH SLAB A20 REINFORCEMENT	0
43	K43	SLEEPER SLAB S1 & DETAILS	0
44	K44	SLEEPER SLAB S2	0
45	K45	SLEEPER SLAB S3	0
46	K46	HANDLING & YARD STORAGE DETAILS	0

APPROVED

Michael B. Twiss, P.E.

For Deputy Chief Engineer Structures

Reviewed By: MBT

FED. ROAD REG. NO.	STATE	CONTRACT NO.	SHEET NO.	TOTAL SHEETS
	N.Y.	D262116		

P.I.N. #: SABP.10 B.I.N. #: 1093672

ACCELERATED BRIDGE PROGRAM-PHASE 1A, CONTRACT 7

INTERSTATE 481 NB OVER KIRKVILLE ROAD

TOWN OF DeWITT

ONONDAGA COUNTY

THE FORT MILLER Co., Inc.
P.O. BOX 98
SCHUYLERVILLE, NY 12871
(518) 695-5000
(518) 695-4970 FAX
www.fortmiller.com

NO.	DATE	BY	DESCRIPTION

REVISIONS

I-481 NB OVER KIRKVILLE ROAD

TOWN OF DeWITT, NY

COVER SHEET

ENGINEER: NYSDOT

CONTRACTOR: VECTOR CONSTRUCTION CORP. 6364 ISLAND ROAD CICERO, NEW YORK 13039

DRAWN BY:	DATE	CHK'D BY:	SHEET	SCALE	F.M. JOB No.	DWG.
VCE	10/3/12	SDH	1	NONE	14010	K1

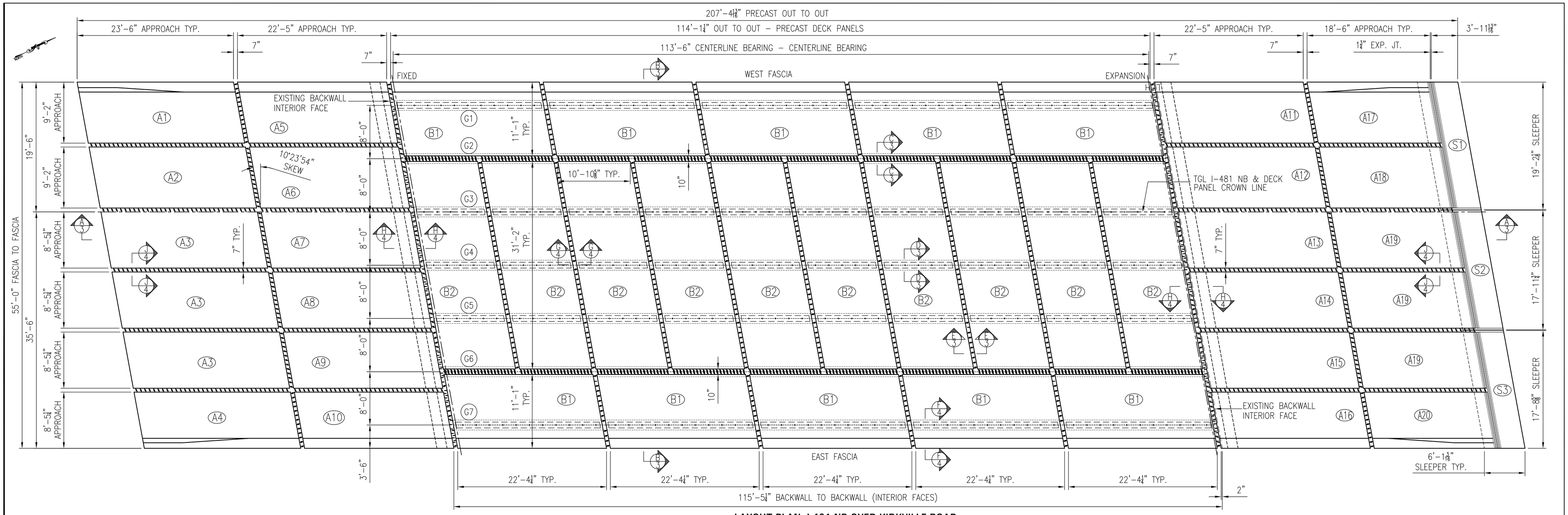

LAYOUT PLAN: I-481 NB OVER KIRKVILLE ROAD

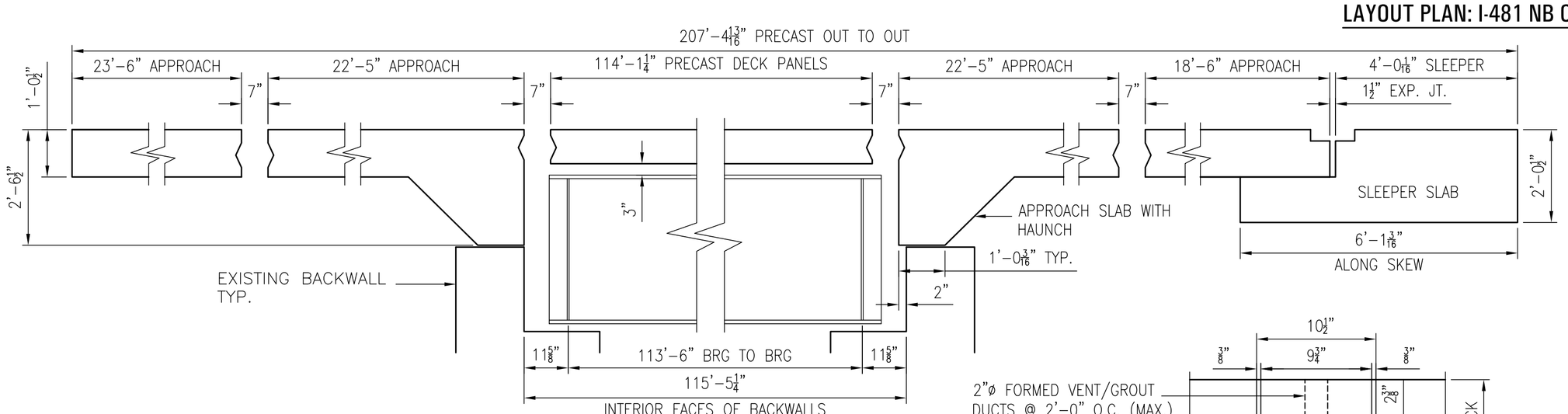

SECTION A/3 ALONG SKEW

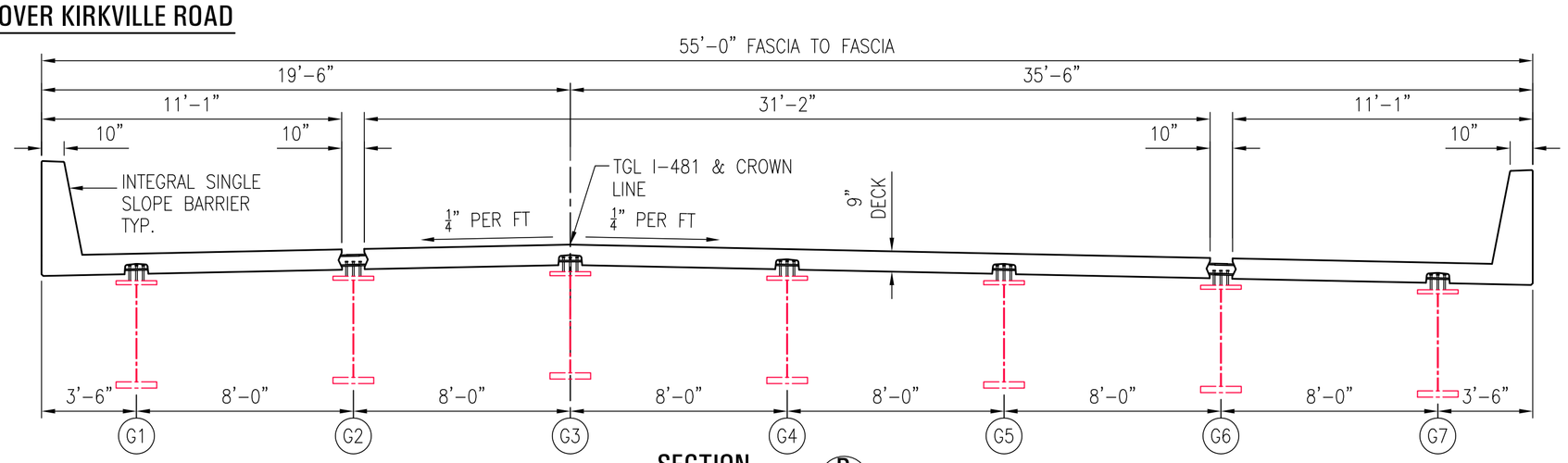

SECTION B/3 PERPENDICULAR

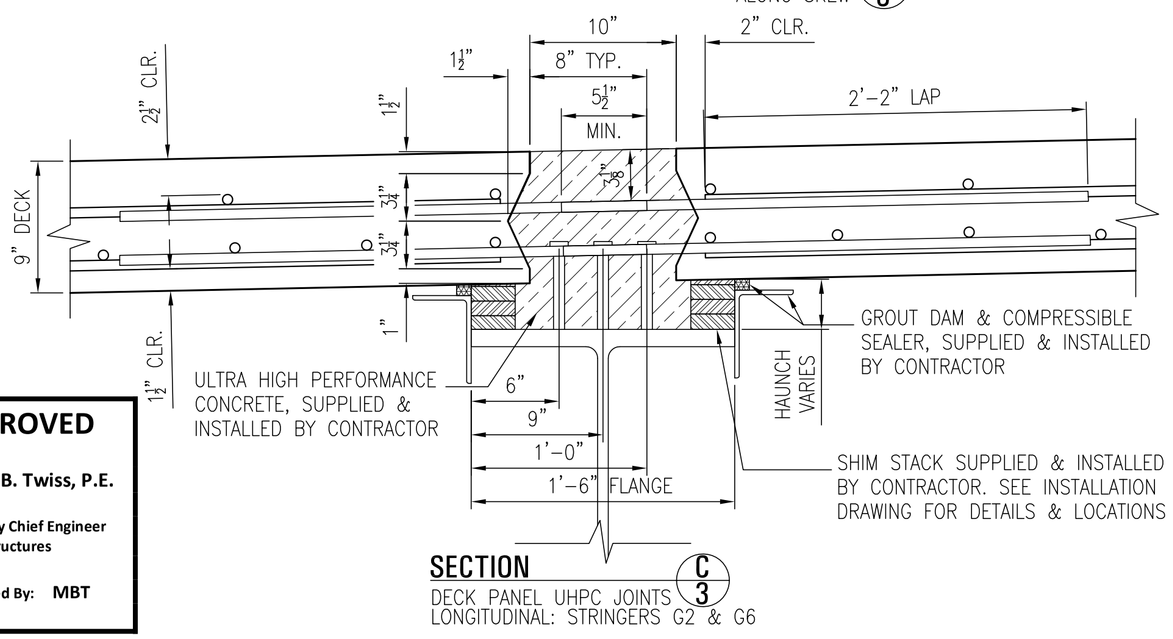

SECTION C/3 DECK PANEL UHPC JOINTS LONGITUDINAL: STRINGERS G2 & G6

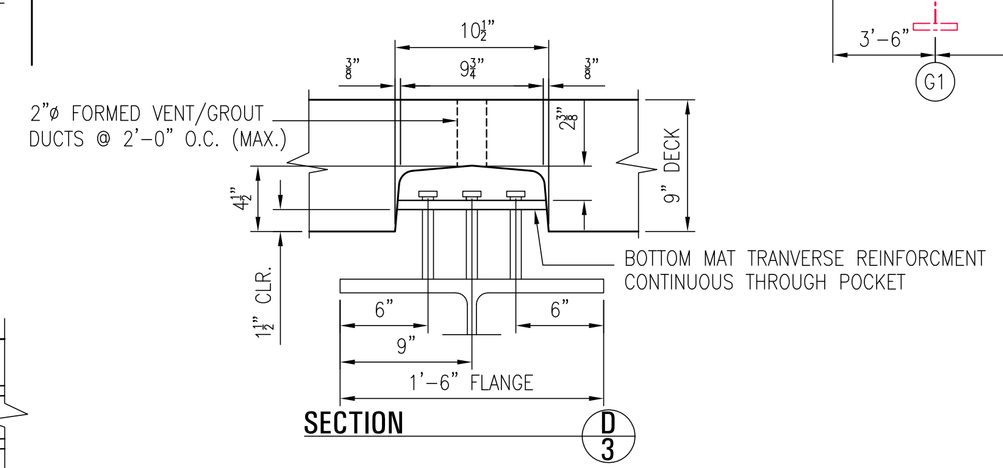

SECTION D/3

STUD POCKET DETAIL – MK#'S B1 & B2
DECK PANEL GROUTED JOINTS
LONGITUDINAL: STRINGERS G1, G3, G4 & G7

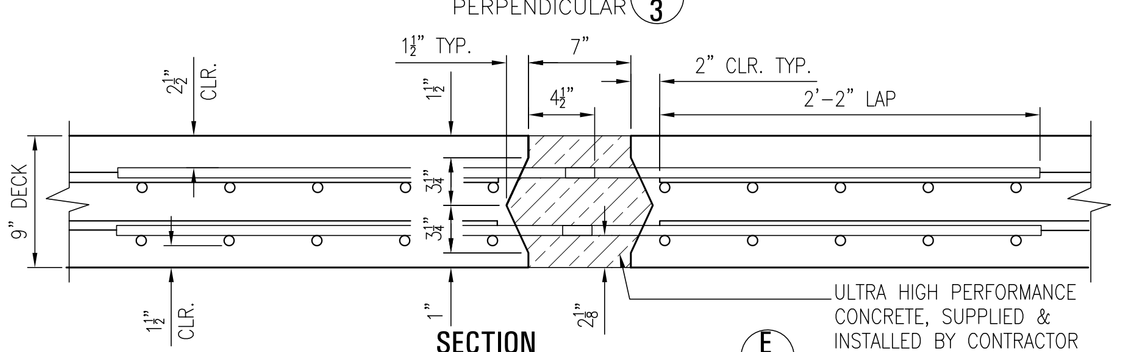

SECTION E/3 DECK PANEL TRANSVERSE JOINTS (UHPC)

APPROVED

Michael B. Twiss, P.E.

For Deputy Chief Engineer Structures

Reviewed By: MBT

FED. ROAD REG. NO.	STATE	CONTRACT NO.	SHEET NO.	TOTAL SHEETS
	N.Y.	D262116		
CPIN: SABP10		BIN: 1093672		
ACCELERATED BRIDGE PROGRAM–PHASE 1A, CONTRACT 7				
INTERSTATE 481 NB OVER KIRKVILLE ROAD				
TOWN OF DeWITT				
ONONDAGA COUNTY				

THE FORT MILLER Co., Inc.
P.O. BOX 98
SCHUYLERVILLE, NY 12871
(518) 695-5000
(518) 695-4970 FAX
www.fortmiller.com

NO.	DATE	BY	DESCRIPTION

REVISIONS

I-481 NB OVER KIRKVILLE ROAD

TOWN OF DeWITT, NY

SITE LAYOUT

ENGINEER: NYSDOT

CONTRACTOR: VECTOR CONSTRUCTION CORP. 6364 ISLAND ROAD CICERO, NEW YORK 13039

DRAWN BY:	DATE	CHK'D BY:	SHEET	SCALE	F.M. JOB No.	DWG.
MAW	9/11/12	SDH	3	NONE	14010	K3

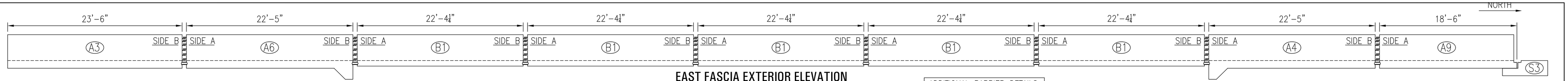

EAST FASCIA EXTERIOR ELEVATION
(FACING WEST)

ADDITIONAL BARRIER DETAILS: SHEET 5.

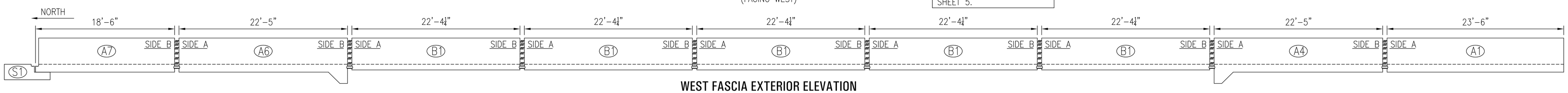

WEST FASCIA EXTERIOR ELEVATION
(FACING EAST)

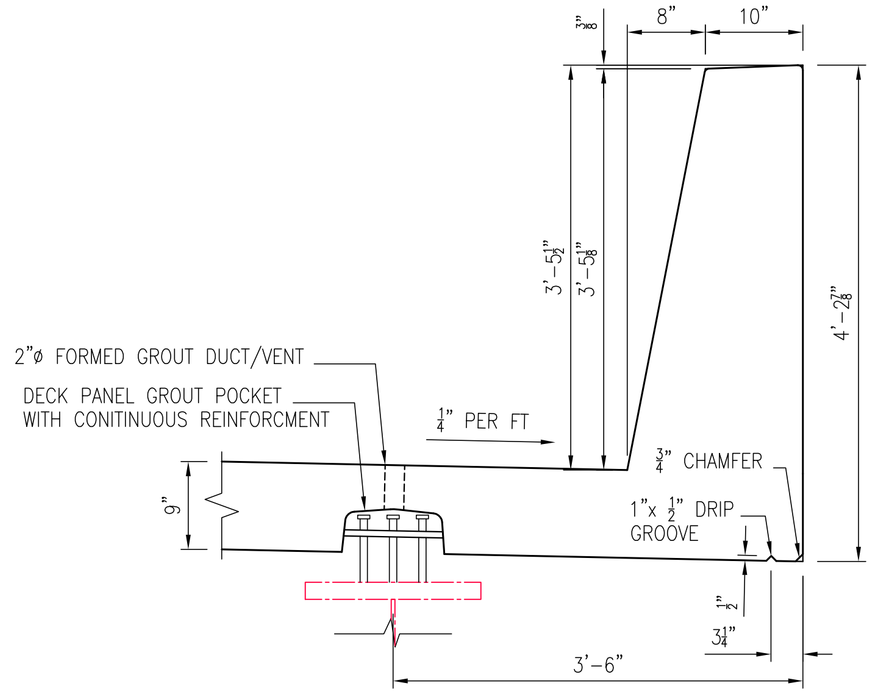

SECTION F/4
DECK PANEL FASCIA DETAIL: MK# B1
INTEGRAL BARRIER – TYP EA. FASCIA

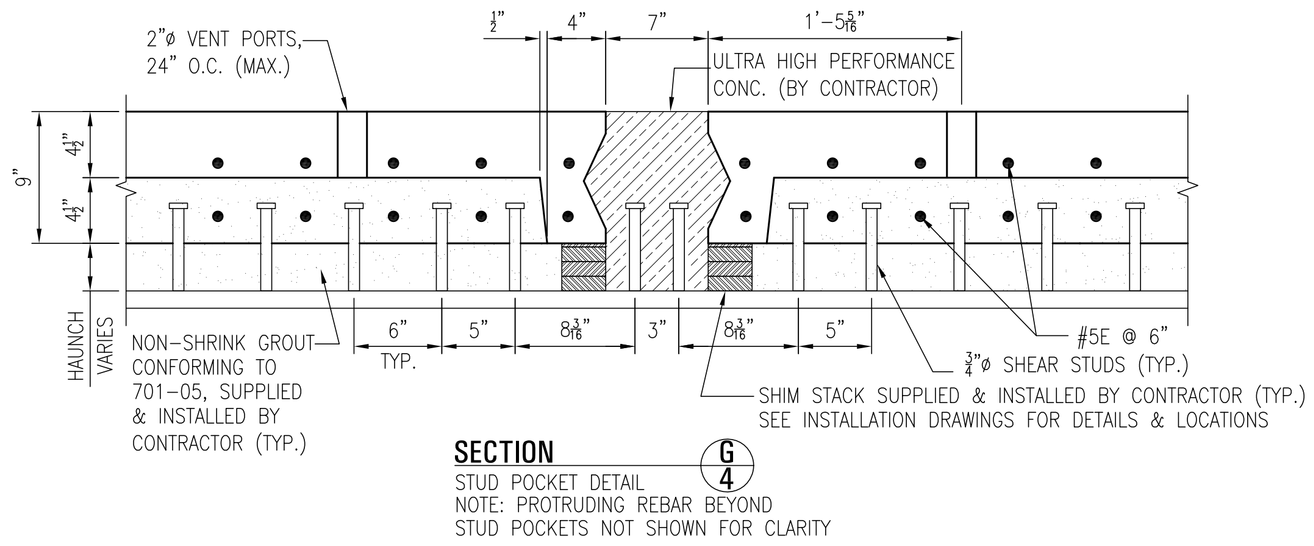

SECTION G/4
STUD POCKET DETAIL
NOTE: PROTRUDING REBAR BEYOND
STUD POCKETS NOT SHOWN FOR CLARITY

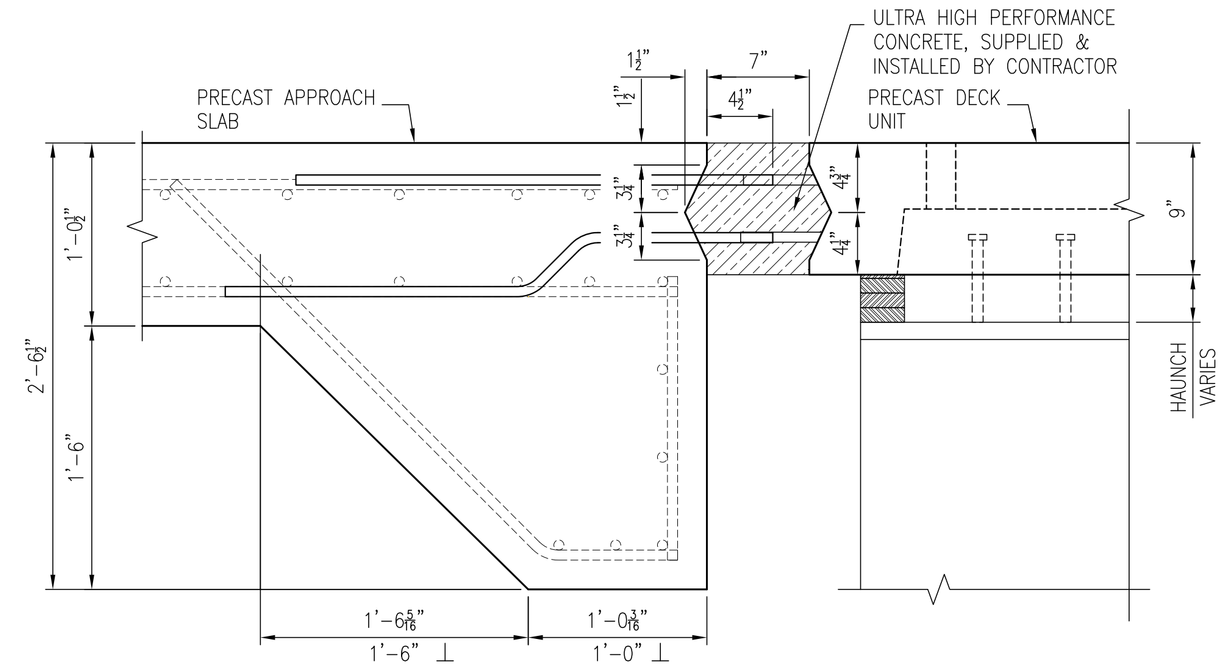

SECTION H/4
ABUTMENT TRANSVERSE JOINT
TYP. EA. ABUTMENT

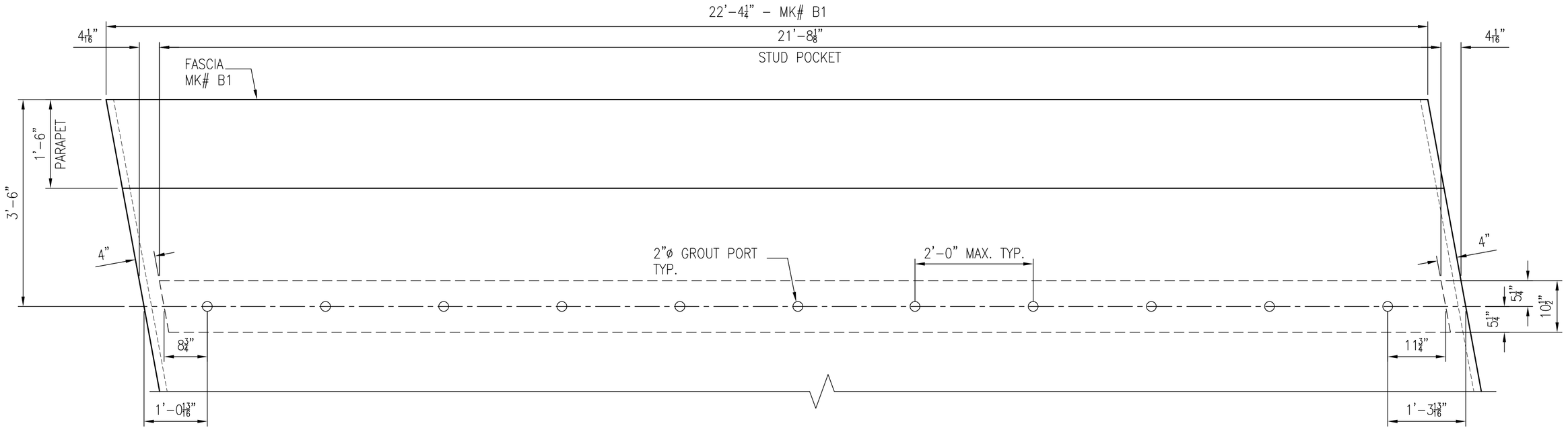

1/4 STUD POCKET DETAIL
MK# B1– PLAN VIEW

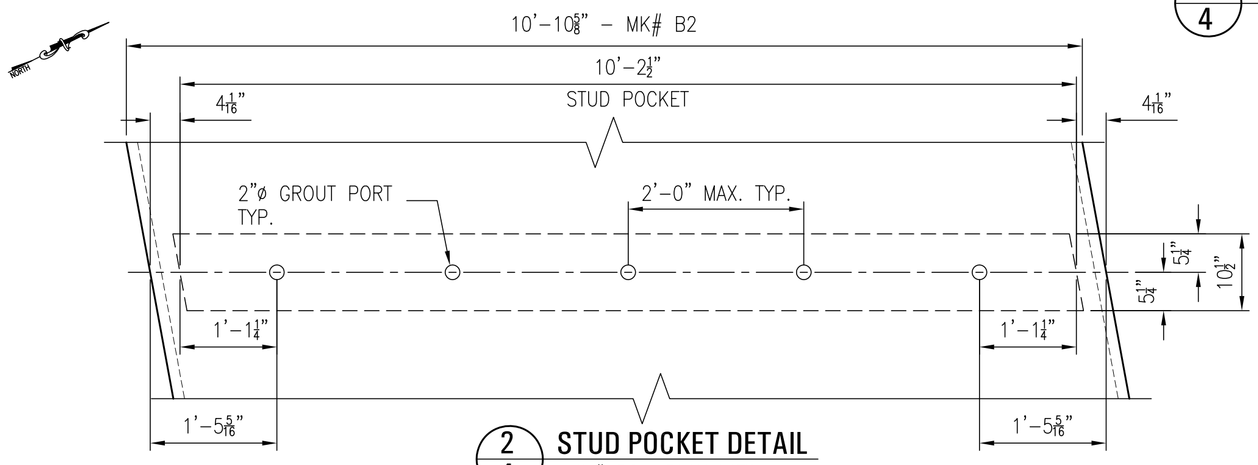

2/4 STUD POCKET DETAIL
MK# B2– PLAN VIEW

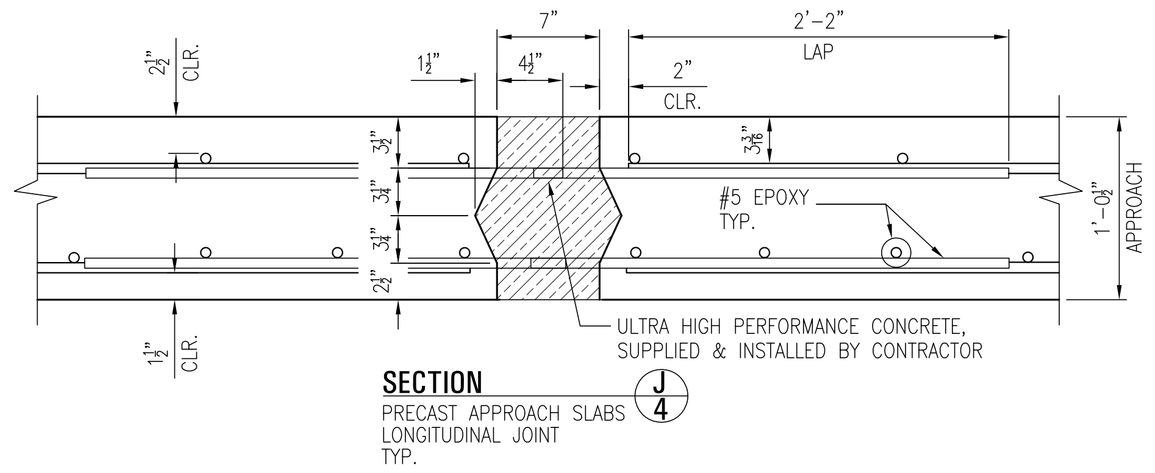

SECTION J/4
PRECAST APPROACH SLABS
LONGITUDINAL JOINT
TYP.

APPROVED

Michael B. Twiss, P.E.

For Deputy Chief Engineer Structures

Reviewed By: MBT

FED. ROAD REG. NO.	STATE	CONTRACT NO.	SHEET NO.	TOTAL SHEETS
	N.Y.	D262116		

CPIN: SABP10 BIN: 1093672
ACCELERATED BRIDGE PROGRAM–PHASE 1A, CONTRACT 7
INTERSTATE 481 NB OVER KIRKVILLE ROAD
TOWN OF DeWITT
ONONDAGA COUNTY

THE FORT MILLER Co., Inc.
P.O. BOX 98
SCHUYLERVILLE, NY 12871
(518) 695-5000
(518) 695-4970 FAX
www.fortmiller.com

NO.	DATE	BY	DESCRIPTION

REVISIONS

I-481 NB OVER KIRKVILLE ROAD
TOWN OF DeWITT, NY

MISC. DETAILS

ENGINEER: NYSDOT

CONTRACTOR: VECTOR CONSTRUCTION CORP.
6364 ISLAND ROAD
CICERO, NEW YORK 13039

DRAWN BY:	DATE	CHK'D BY:	SHEET	SCALE	F.M. JOB No.	DWG.
MAW	9/11/12	SDH	4	NONE	14010	K4

BIN: 1093672
I481 NB / Kirkville Rd

BEGIN ABUTMENT DETERIORATION SKETCH

NOT TO SCALE

DATE: 01/08/2014

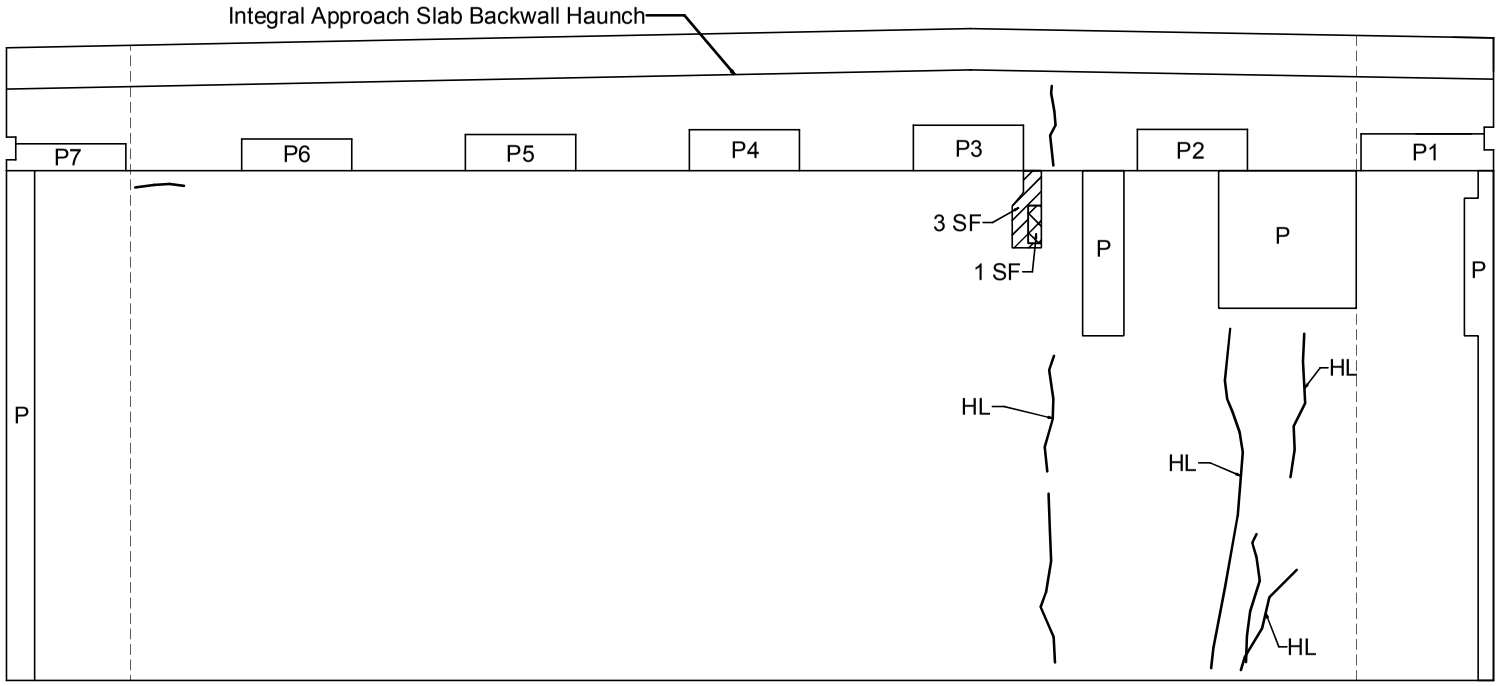

Tight Mapcracking Throughout Stem

ELEVATION

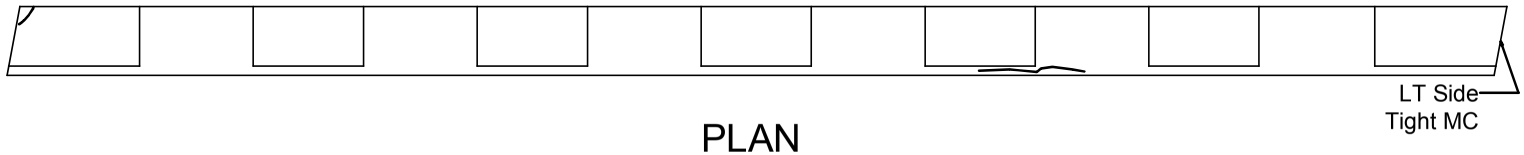

PLAN

LEGEND			
HL	Hairline		Spall
	Hollow Concrete	P	Patch
			Crack

BIN: 1093672
I481 NB / Kirkville Rd

END ABUTMENT DETERIORATION SKETCH

NOT TO SCALE

DATE: 01/08/2014

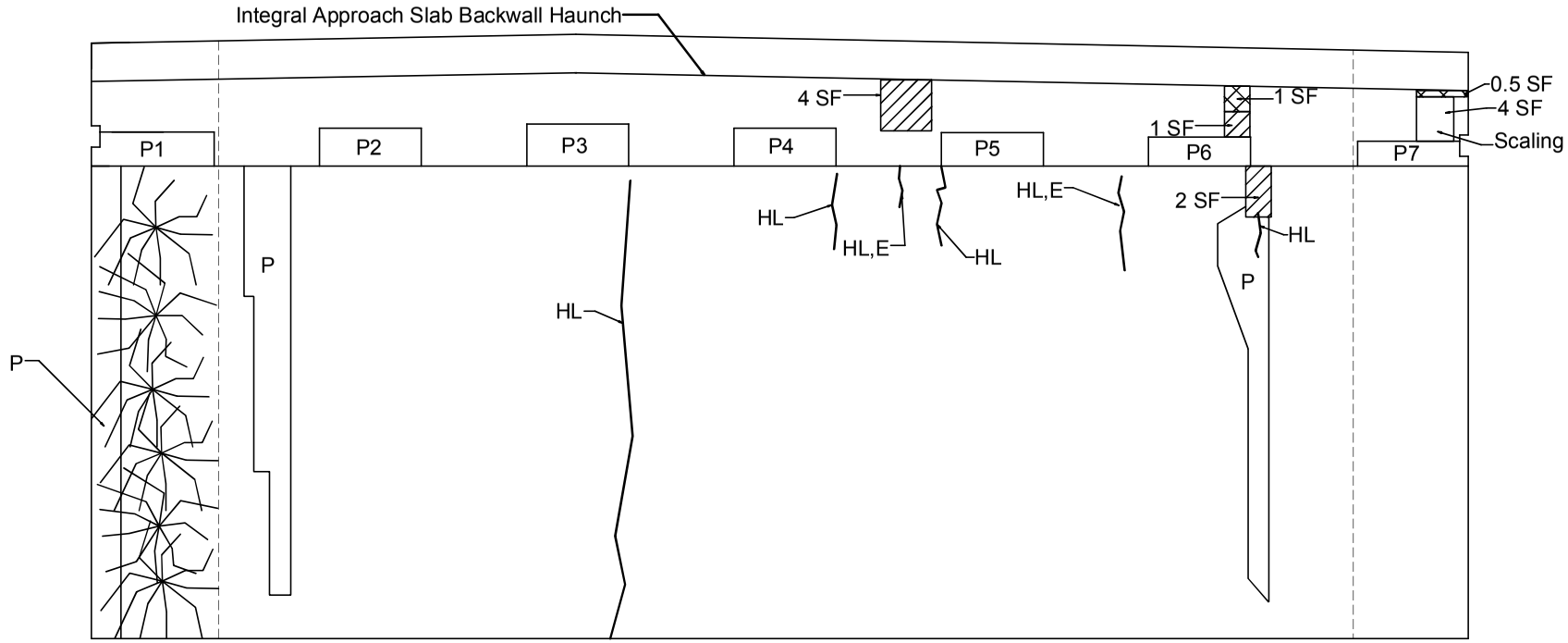

ELEVATION

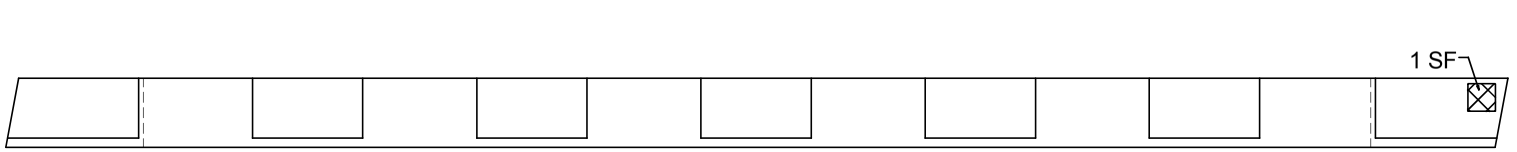

PLAN

LEGEND

Hollow Concrete	Spall
Mapcracking	P Patch
E Efflorescence	HL Hairline
	Crack

IN-DEPTH PHOTO DOCUMENTATION

BIN: 1093672
I481 NB / Kirkville Rd

IN DEPTH INSPECTION
PHOTO LOCATION SKETCH

DATE: 01/08/2014

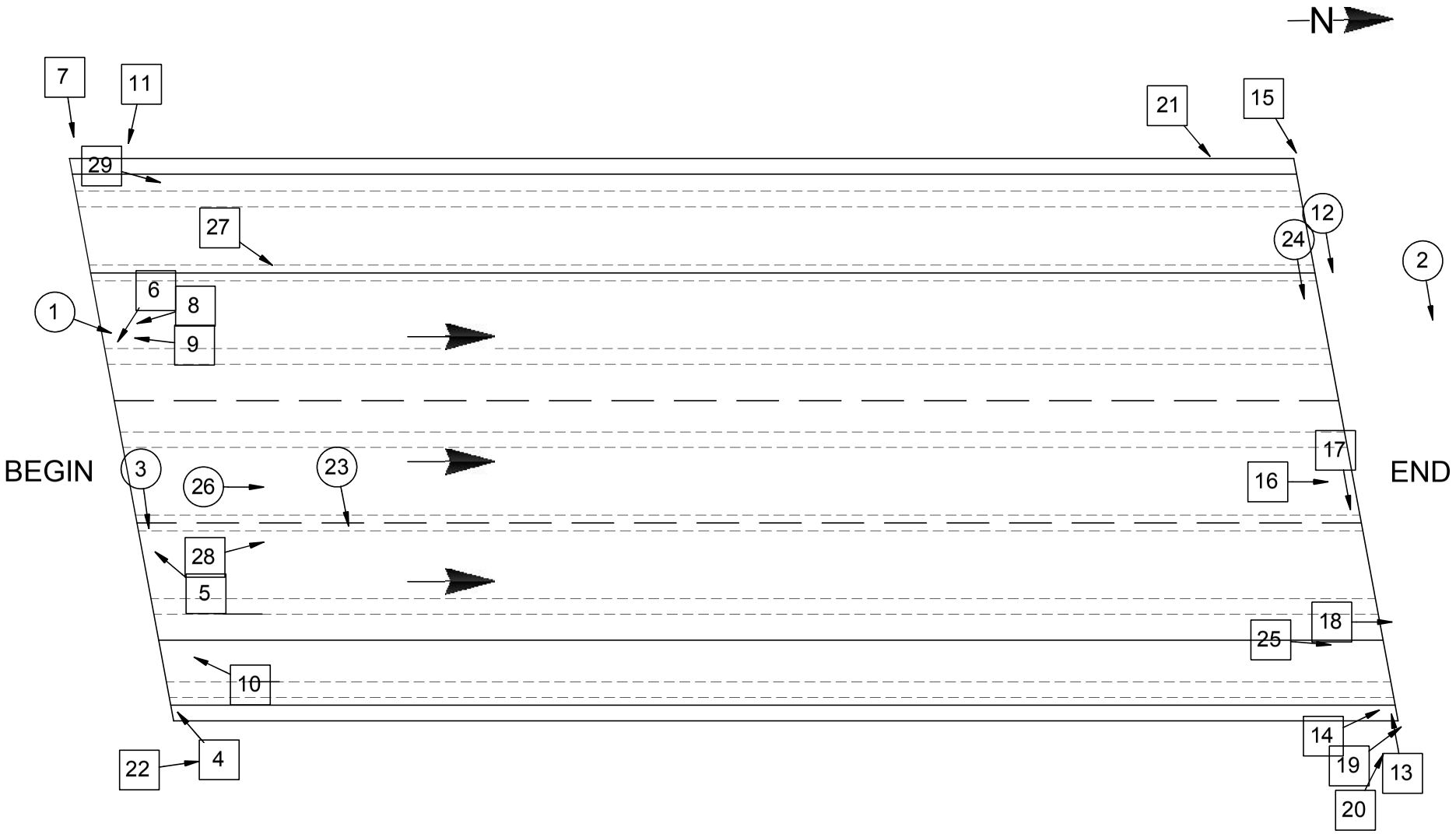

LEGEND

(XX) → Photo Above Deck

XX → Photo Below Deck

In-Depth Inspection Photos I-481 NB over Kirkville Rd., BIN 1093672



DESCRIPTION: TOP OF DECK – LOOKING FROM BEGIN TO END

PHOTO 1



DESCRIPTION: END APPROACH SLEEP SLAB – LOOKING FROM LEFT TO RIGHT

PHOTO 2



DESCRIPTION: BEGIN JOINT WITH DECK – LOOKING FROM LEFT TO RIGHT

PHOTO 3



DESCRIPTION: BEGIN ABUTMENT BEARING G7 – RIGHT SIDE (TYPICAL G1)

PHOTO 4



DESCRIPTION: BEGIN ABUTMENT BEARING AT G5 – RIGHT SIDE GUANO

PHOTO 5



DESCRIPTION: BEGIN ABUTMENT SEAT AT BAY 2 – LOOKING LEFT TO RIGHT

PHOTO 6



DESCRIPTION: BEGIN ABUTMENT PEDESTAL AT P1 -- LEFT SIDE

PHOTO 7



DESCRIPTION: BEGIN ABUTMENT BACKWALL AT BAY 2

PHOTO 8



DESCRIPTION: BEGIN ABUTMENT STEM AT BAY 2

PHOTO 9



DESCRIPTION: BEGIN ABUTMENT STEM AT BAY 6

PHOTO 10



DESCRIPTION: BEGIN ABUTMENT EROSION – LOOKING FROM LEFT TO RIGHT

PHOTO 11



DESCRIPTION: END ABUTMENT JOINT WITH DECK – LOOKING LEFT TO RIGHT

PHOTO 12



DESCRIPTION: END ABUTMENT BEARING AT G7 – LOOKING FROM RIGHT TO LEFT

PHOTO 13



DESCRIPTION: END ABUTMENT PEDESTAL AT P7 – RIGHT SIDE

PHOTO 14



DESCRIPTION: END ABUTMENT BACKWALL – LOOKING LEFT TO RIGHT

PHOTO 15



DESCRIPTION: DECK AT BAY 4 – LOOKING FROM BEGIN TO END

PHOTO 16



DESCRIPTION: END ABUTMENT BACKWALL AT BAY 4 – LOOKING LEFT TO RIGHT

PHOTO 17



DESCRIPTION: END ABUTMENT BACKWALL AT BAY 6

PHOTO 18



DESCRIPTION: END ABUTMENT BACKWALL – RIGHT SIDE

PHOTO 19



DESCRIPTION: STANDARD PHOTO OF END ABUTMENT

PHOTO 20



DESCRIPTION: END ABUTMENT EROSION – LOOKING LEFT TO RIGHT

PHOTO 21



DESCRIPTION: RIGHT FASCIA – LOOKING FROM BEGIN TO END

PHOTO 22



DESCRIPTION: DECK PANEL 2 – LOOKING FROM LEFT TO RIGHT

PHOTO 23



DESCRIPTION: DECK AT END – LOOKING FROM LEFT TO RIGHT

PHOTO 24



DESCRIPTION: DECK AT BAY 6 – LOOKING FROM BEGIN TO END

PHOTO 25



DESCRIPTION: DECK AT LEFT LANE NEAR BEGIN – LOOKING FROM BEGIN TO END

PHOTO 26



DESCRIPTION: PAINT FRAMING – LOOKING FROM BEGIN TO END

PHOTO 27



DESCRIPTION: PAINT AT G5 – LOOKING FROM BEGIN TO END

PHOTO 28



DESCRIPTION: PAINT AT G1 – LOOKING FROM BEGIN TO END

PHOTO 29

DESCRIPTION:

PHOTO

ASBESTOS SAMPLING SURVEY

Asbestos Sampling Survey

Location:

BIN 1-09367-2
Interstate Route 481 North Bound over Kirkville Road

Prepared for:

New York State
Department of Transportation

PIN 3408.00.101

LaBella Project No. 97132

May, 1998

Table of Contents

Page

I. Project Summary 1

II. Site Description 1

III. Inspection Procedures 1

IV. Results 2

Certification 2

Figures and Table

I. Project Summary

In accordance with conditions of Term Agreement D010010, LaBella Associates, P.C. conducted an asbestos sampling survey of the Interstate Route 481 North Bound Bridge over Kirkville Road. Based on laboratory analyses of bulk samples collected, the following material was determined to contain asbestos:

BIN 1-09367-2 Interstate Route 481 North Bound over Kirkville Road

Type of Material	Estimated Amount
Sheet Packing	10 Square Meters

II. Site Description

The Site is located in Onondaga County, New York. For the purpose of this report, the Site consists of the Interstate Route 481 North Bound Bridge over Kirkville Road (See attached FIGURE 1 - Site Location Map).

III. Inspection Procedures

The following procedures were used to obtain the data for this Report:

A. A review of record drawings supplied by Region 3 personnel and a visual inspection of the subject structure were conducted to identify potential visible/accessible sources of asbestos-containing materials. Observations and notes were made to provide a description of the structure, and an estimate of the approximate amount, length, or area of ACM present.

B. Physical or operational constraints which might affect the removal of the ACM were identified and reported.

C. Bulk samples of suspected ACM were collected during the site inspection of the subject structure. Samples were taken from each homogeneous area that may contain ACM.

D. Samples were submitted for analysis. Preliminary PLM analyses of NOB materials were performed by LaBella Laboratories, a NYSDOH approved laboratory, to determine the presence and percentage of asbestos in each sample. TEM analyses of NOB materials, if necessary, were performed by EMSL Analytical, Inc. or New York Testing Laboratories, Inc.

E. Lab results were used to determine the approximate location, type, and amount of the verified ACM.

F. A drawing of the structure at the Site was created, in order to show sample locations and the approximate locations and amounts of confirmed ACM observed in accessible locations.

Only accessible areas were inspected. Inaccessible areas, such as areas within the bridge or the approaches to the bridge were not included in this inspection. No investigation was conducted by LaBella Associates to determine the presence of underground utilities on or in the immediate vicinity of the Site. Actual sample locations are shown in the attached FIGURE 2. Results of bulk sample analyses are tabulated in the attached TABLE.

IV. Results

BIN 1-09367-2 Interstate Route 481 North Bound over Kirkville Road

Sheet Packing

Asbestos-containing sheet packing is located between the tops of the abutments and the deck slab at both ends of the bridge. Most of this material is presently covered by the bridge deck, although the edges of this sheet packing are exposed and visible at various locations.

It is estimated that the total amount of this asbestos-containing sheet packing material on the bridge is approximately 10 square meters. This estimate is based on field measurements taken at the time of the site visit.

The approximate locations of this asbestos-containing sheet packing are shown in FIGURE 2.

Certification

LaBella Associates, P.C. certifies the accuracy of this report, to the best of our knowledge, based on the information collected as described in the Inspection Procedures Section of this investigation.

Figures & Table

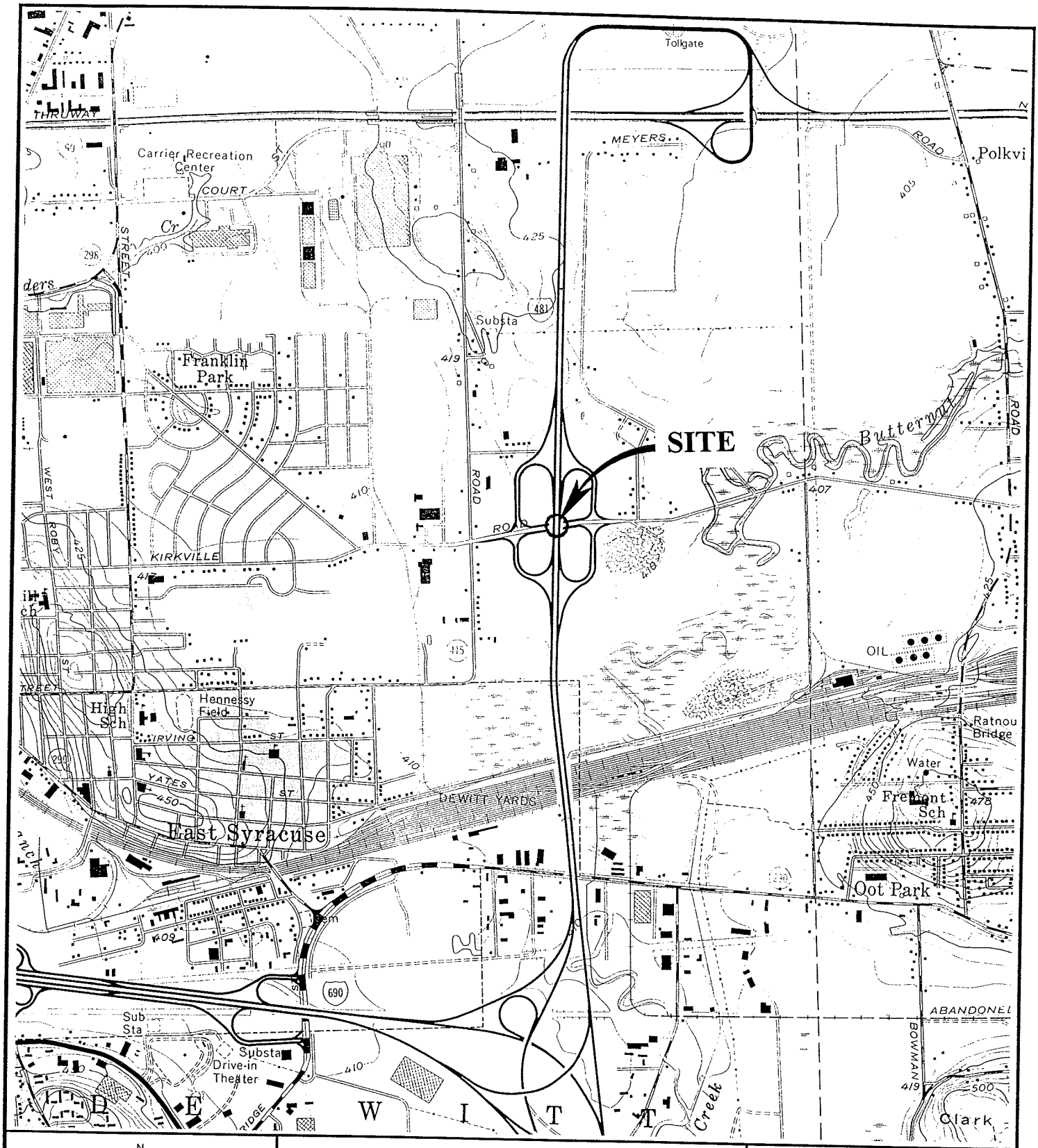

SCALE: 1" = 2000'

FIGURE 1
Site Location Map

I-481 NORTH BOUND OVER KIRKVILLE ROAD

BIN 1-09367-2

LABELLA

PROJECT NO. 97132

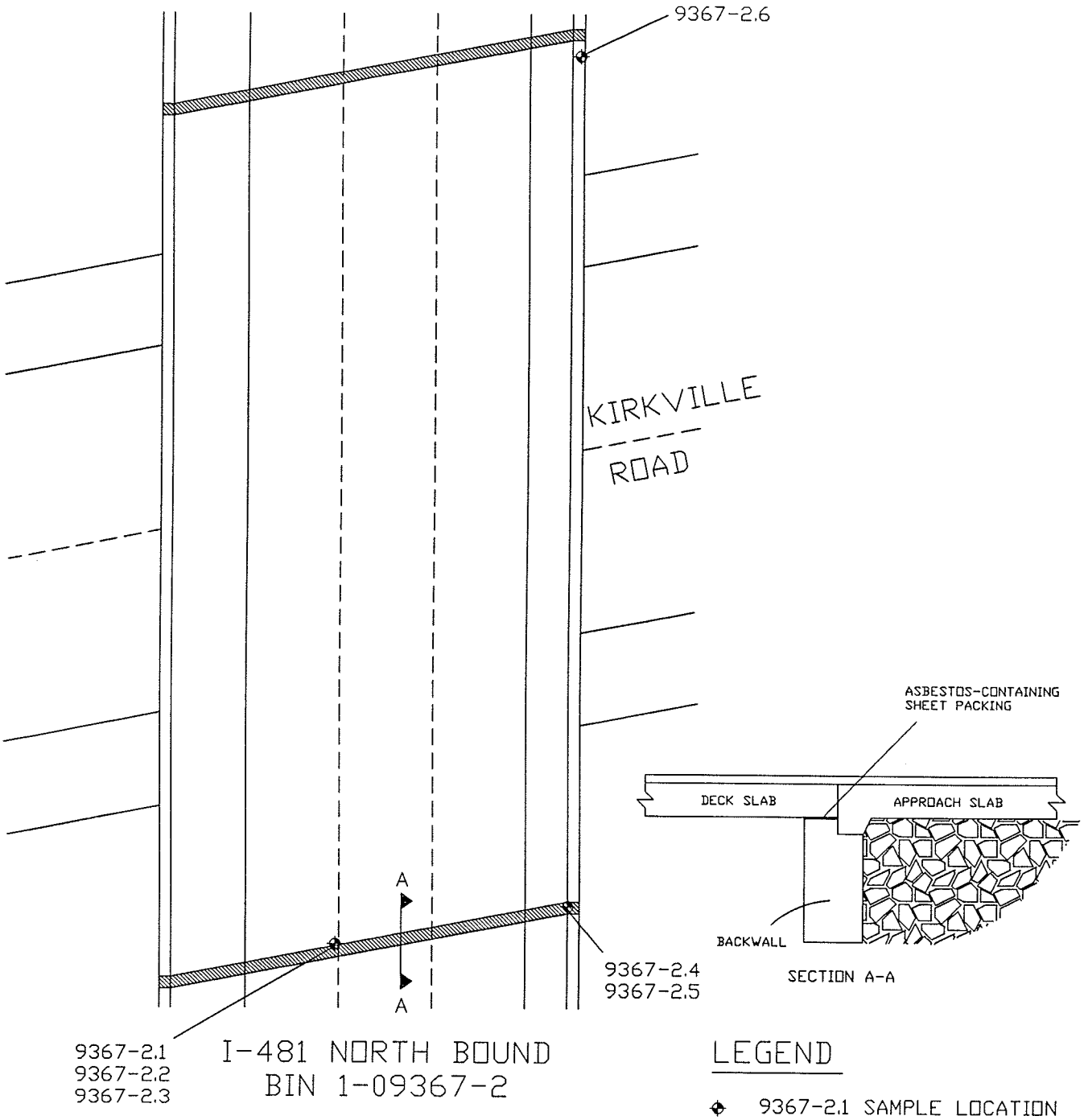

NORTH	PROJECT TITLE: ASBESTOS SAMPLING SURVEY 16 BRIDGES, ONONDAGA COUNTY, NEW YORK	PROJECT NO. 97132
		PIN 3804.00.101
	FIGURE 2: I-481 NORTH BOUND OVER KIRKVILLE ROAD BIN 1-09367-2 SAMPLE LOCATIONS AND CONFIRMED ACM	NOT TO SCALE
		DATE: MAY, 1998

Bulk Sample Results Table

Asbestos Sampling Survey
BIN 1-09367-2
Interstate Route 481 North Bound over Kirkville Road
Onondaga County, New York
LaBella Project # 97132
PIN 3804.00.101

Sample #	Sample Location	Type of Material	Results % Asbestos	Amount of Material	Specification Item No.
9367-2.1	**South End of Bridge Between Deck & Abutment**	**Sheet Packing**	**35% Chrysotile**	**10 Square Meters**	**15202.0627 (M)**
9367-2.2	South End of Bridge on Pedestal	Masonry Coating	None Detected	N/A	N/A
9367-2.3	South End of Bridge, on Inside I-Beam	Green Paint	None Detected	N/A	N/A
9367-2.4	South End of Bridge, Beneath Bearing	Bearing Pad	None Detected	N/A	N/A
9367-2.5	South End of Bridge, on East I-Beam	Green Paint	None Detected	N/A	N/A
9367-2.6	North End of Bridge, on East I-Beam	Green Paint	None Detected	N/A	N/A

ATHENICA
ENVIRONMENTAL SERVICES INC.
Tel (718) 784-7490
Fax (718) 784-4085

BULK (NOB) ASBESTOS ANALYSIS BY POLARIZED LIGHT MICROSCOPY AND TRANSMISSION ELECTRON MICROSCOPY

CLIENT: NYS DOT / Region 3
LABORATORY ID #: 04-09-254
DATES OF ANALYSIS: 10/1/04

PROJECT: Bin #1093672
ANALYT. METHODOLOGIES: ELAP 198.1, ELAP 198.4
DATE OF REPORT: 10/4/04

LABORATORY RESULTS

CLIENT #	LAB. ID #	LOCATION	%ORG	%ASI	%AII	PLM RESULTS	TYPE OF ASBEST.	TEM RESULTS	TYPE OF ASBEST.	POSIT. / NEGAT.
01	04-09-254-01	Steel Paint Coating G – 3 End web stiffener	46.25	7.99	45.76	ND	NA	**ND**	NA	**Negat.**
02	04-09-254-02	Steel Paint Coating Bay 3 End Cross Bracing	38.46	16.52	45.01	ND	NA	**ND**	NA	**Negat.**
03	04-09-254-03	Steel Paint Coating G- 6 Bottom Flange @ End	26.42	15.85	57.72	**ND**	NA	**ND**	NA	**Negat.**

E Sioukri

ANALYST
E. Sioukri

LABORATORY DIRECTOR
Spiro Dongaris

LABORATORY CERTIFICATION NUMBERS: NVLAP 101958, ELAP 10955

- Athenica Environmental Services Inc. (AES), is responsible only for information pertaining to samples taken by its employees.
- Samples will be stored for sixty (60) days. AES Inc., should be notified within this time frame for a true duplicate analysis.
- The report relates only to items tested. This report must not be used to claim product endorsement by NVLAP or any other agency of the U.S. Government. Test reports may not be reproduced except in full and with prior approval of AES Inc.
- The liability of Athenica Environmental Services Inc. with respect to the services charged, shall in no event exceed the amount of the invoice.

ATHENICA
ENVIRONMENTAL SERVICES INC.
45-09 GREENPOINT AVENUE
LONG ISLAND CITY, NY 11104
Tel. (718) 784-7490
Fax. (718) 784-4085

PROJECT NO. (ATHENICA FILE#) C003314

SITE BLN # 1095672

DATE 9/23/2004

METHOD OF SHIPMENT U.S. MAIL

INSPECTOR

NUMBER OF SAMPLES 3

TYPE OF ANALYSIS REQUESTED ☐ PLM ☒ NOB-PLM ☒ NOB-TEM ☐ OTHERS

TURNAROUND TIME ☐ 6 HRS ☐ 12 HRS ☐ 24 HRS ☒ OTHER HRS

COMMENTS ATT: CHRISTOPHER ANDERSON
333 E. WASHINGTON ST. SYRACUSE, N.Y. 13202

HOM. AREA	SAMLPLE #	SAMPLE DESCRIPTION	SAMPLE LOCATION	FIELD COMMENTS	LABORATORY RESULTS		
					PLM	PLM-NOB	TEM-NOB
	01	STEEL PAINT COAT	G-3 END WEB STIFFENER				
	02	"	BAY 3 END CROSS BRACING				
	03	"	G-6 BOTTOM FLANGE @ END				

TRANSMITTAL OF RESULTS :
☒ STANDARD
☐ TELEPHONE RESULTS TO
☐ FAX RESULTS TO

TELEPHONE # : (315) 428-4628
FAX # :

BATCH # : 04-09-254

CHAIN OF CUSTODY RECORD

RELINQUISHED BY :	Keith Way	DATE :	9 / 23 / 2004	TIME :	1:00
RECEIVED BY :	FEDEX	DATE :	9 / 29 / 2004	TIME :	
ANALYST :		DATE :	10 / 01 / 2004	TIME :	

LABORATORY ACCREDITATION :
NVLAP# 101958 ELAP# 10955

LATEST BIENNIAL INSPECTION REPORT

Inspection Date: 10/10/2012 RC: 33 BIN: 1093672

Bridge Ratings

Carried: 481I 481I33012078 Crossed: KIRKVILLE RD-CR53 CheckValue: 1,799,362,570

Inspection Agency: 10 - NYSDOT Type of Inspection: 1 - BIENNIAL
GTMS: 302 -- Steel - Stringer/Multi-Beam or Girder
POSTINGS: See Gen Rec Page 1 for Postings at time of inspection.
Further Investigation Needed: Need further invest of deck, ultrasonic pentration radar
State Highway Number: 70-7 Milepoint: 8.31 AADT/Yr: 9755 / 2002
Orientation: 1 - North Political Unit: 0233 - Town of DEWITT Year Built: 1972
Total Spans: 1 Ramp Bridge Attached To Span: NA BIN: NA
General Recommendation: 4 Computed Condition Rating: 4.250

Abutment Ratings:	Beg Abut	End Abut
Joint with Deck	8	3
Bearings, Bolts, Pads	5	3
Seats and Pedestals	4	4
Backwall	5	4
Stem (Breastwall)	5	5
Erosion or Scour	5	5
Footings	9	9
Piles	9	9
Recommendation	5	4

Wingwall Ratings:	Beg Abut	End Abut
Walls	5	5
Footings	9	9
Erosion or Scour	6	6
Piles	9	9

Channel Ratings:	Channel
Stream Alignment	8
Erosion and Scour	8
Waterway Opening	8
Bank Protection	8

Approach Ratings:	Approaches
Drainage	5
Embankment	6
Settlement	4
Erosion	5
Pavement	4
Guide Railing	4

Number of Flags Issued:

RED: 0 Yellow: 0 Safety: 0

Vulnerability Reviews Recommended: 1=Yes, 2=No, 3=NA, X=NotActive

Hydraulic: 3	Overload: X	Steel: 2
Collision: 2	Concrete: X	Seismic: X

Inspector's Signature: CheckValue: 1,799,362,570 Date: 10/10/2012

Signed copy of this inspection report is available in the appropriate NYSDOT Regional Office

David Hann,PE () (Inspector ID:3000055)

Reviewed By: Date: 11/21/2012

Signed copy of this inspection report is available in the appropriate NYSDOT Regional Office

James R. Manning,PE () (QC ID:3000023)

Inspection Date: 10/10/2012 RC: 33 BIN: 1093672

Span Ratings

Carried: 481I 481I33012078 Crossed: KIRKVILLE RD-CR53 CheckValue: 1,799,362,570

Deck Element Ratings:	001
Wearing Surface	4
Curbs	5
Sidewalks, Fascias	4
Railings, Parapets	5
Scuppers	8
Gratings	8
Median	8
Mono Deck Surface	4

Superstructure Ratings:	001
Structural Deck	3
Primary Members	5
Secondary Members	6
Paint	4
Joints	8
Recommendation	5

Pier Ratings:	001
Bearings, Bolts, Pads	8
Pedestals	8
Top of Cap or Beam	8
Stem Solid Pier	8
Cap Beam	8
Pier Columns	8
Footings	8
Erosion or Scour	8
Piles	8
Recommendation	8

Utility Ratings:	001
Lighting	8
Sign Structure	8
Utilities and Support	8

Field Notes:

Field Date	Arrival	Departure	Temp (C)	Temp (F)	Weather Conditions
10/10/2012	7:30:00 AM	2:30:00 PM		45	Mostly cloudy

Inspection Date: 10/10/2012 RC: 33 BIN: 1093672

Inspection Notes

Carried: 481I 481I33012078 Crossed: KIRKVILLE RD-CR53 CheckValue: 1,799,362,570

Note ID: 351210936720001

Beg Abut -- Abutment: Seats and Pedestals -- Rated 4, Was 4
End Abut -- Abutment: Bearings, Bolts, Pads -- Rated 3, Was 5
End Abut -- Abutment: Seats and Pedestals -- Rated 4, Was 4
Referenced Photos: "2"
2012 - The begin, end bearings, and seat are covered with pigeon debris and the end bearings are filled with pack rust and previous paint. They are frozen and therefore a 3.

Note ID: 351210936720000

Approaches: Settlement -- Rated 4, Was 6
Approaches: Pavement -- Rated 4, Was 5
End Abut -- Abutment: Joint with Deck -- Rated 3, Was 5
Referenced Photos: "1"
2012 - The end joint elastomer header is spalling on the end side of the right side of the center line approx. 4' long by 4" deep. The rubber joint appears pulling away from the steel headers mainly on the right side. The begin and end asphalts have mapcracking.

Note ID: 351210936720003

Approaches: Guide Railing -- Rated 4, Was 6
Referenced Photos: "4"
2012 - The begin left quad guiderail has been impacted, bending over 3 consecutive posts.

Note ID: 351210936720005

Span 001 -- Deck Elements: Wearing Surface -- Rated 4, Was 4
Span 001 -- Deck Elements: Mono Deck Surface -- Rated 4, Was 4
Referenced Photos: "5", "6"
2012 - At the begin the monodeck is cracked/patched directly above the efflo/saturated/mapcracked structural deck. Cracking is extensive in the right begin and shoulder area. It appears to be recently patched in the cracks. At the end there are large patches in the deck at the end right in areas 6' by 6' and 8' by 3'. These areas cover approx. 25% of deck surface and create a rough ride. The edges of the asphalt patches are spalling away allowing for more deck saturation as seen on deck sketch. It is suggested that this bridge gets a new deck.

Note ID: 351210936720004

Span 001 -- Deck Elements: Sidewalks, Fascias -- Rated 4, Was 4
Referenced Photos: "7"
2012 - The right fascia has 3 spalls to the bottom corner approx. 10' long. At this time none seen that would fall on traffic below. The spalls are over lanes 2 and 3 out of 6 lanes counting from the begin abutment.

Inspection Date: 10/10/2012 RC: 33 BIN: 1093672

Inspection Notes

Carried: 481I 481I33012078 Crossed: KIRKVILLE RD-CR53 CheckValue: 1,799,362,570

Note ID: 351210936720006

Span 001 -- Superstructure: Structural Deck -- Rated 3, Was 3
Referenced Photos: "8", "9", "11", "12", "13", "14", "15", "16"
2012 - The end right has a 3.5' by 2" spall to rebar and another area that was recently repaired with the plywood forms still in place in bay 6. At approx. the begin and end 1/3 of the span there is heavy efflo/mapcracking/dampness to the underside of deck (that has rained in days). Approx. 1/3 of the entire deck has this condition, and maching the top WS with the bottom saturation it is just a matter of time till it goes. See deck sketch. Also suggest further investingation for the deck.

Note ID: 351210936720007

Span 001 -- Superstructure: Paint -- Rated 4, Was 4
Referenced Photos: "10"
2012 - The paint system is failing on the bottom flanges mainly and the top of the fascia outside flanges. It starting to spread to the webs.

Note ID: 351210936720002

End Abut -- Abutment: Backwall -- Rated 4, Was 5
Referenced Photos: "3"
2012 - The end left backwall behind G1 is spalling at the top approx. 2' wide and up to 10" deep.

Inspection Date: 10/10/2012 RC: 33 BIN: 1093672

Inspection Photos in Photo Number Order

Carried: 481I 481I33012078 Crossed: KIRKVILLE RD-CR53 CheckValue: 1,799,362,570

End Joint And Pavement

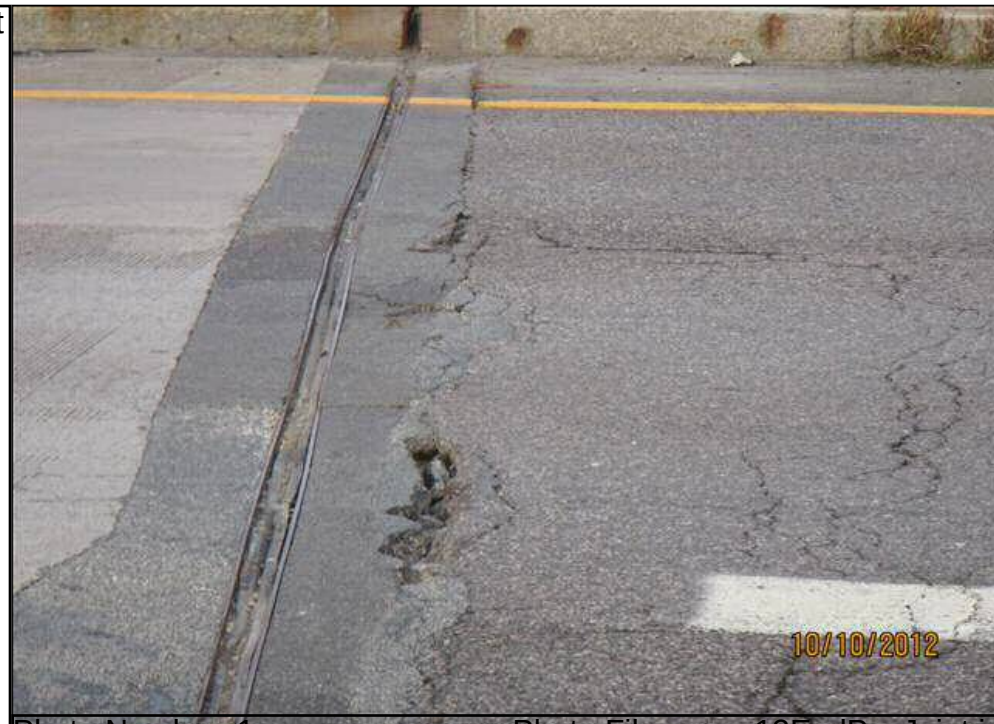

Photo Number: 1 Photo Filename: 12EndPavJoint.jpg

End Bearing #7 And Seat (typ of begin)



Photo Number: 2 Photo Filename: 12EndBrg7Seat.jpg

Inspection Date: 10/10/2012 RC: 33 BIN: 1093672

Inspection Photos in Photo Number Order

Carried: 481I 481I33012078 Crossed: KIRKVILLE RD-CR53 CheckValue: 1,799,362,570

End Left Backwall



Photo Number: 3 Photo Filename: 12EndRtBackwall.jp

begin Left Guide Rail



Photo Number: 4 Photo Filename: 12BegLtGrail.jpg

Inspection Date: 10/10/2012 RC: 33 BIN: 1093672

Inspection Photos in Photo Number Order

Carried: 481I 481I33012078 Crossed: KIRKVILLE RD-CR53 CheckValue: 1,799,362,570

Wearing Surface, Begin center



Photo Number: 5 Photo Filename: 12WsBegCent.jpg

Wearing Surface, End Right



Photo Number: 6 Photo Filename: 12WsEndRt.jpg

Inspection Date: 10/10/2012 RC: 33 BIN: 1093672

Inspection Photos in Photo Number Order

Carried: 481I 481I33012078 Crossed: KIRKVILLE RD-CR53 CheckValue: 1,799,362,570

Right Fascia



Photo Number: 7 Photo Filename: 12FasciaRt.jpg

Deck, End Bay 6 Looking from Begin To End



Photo Number: 8 Photo Filename: 12DeckEndBay6.jpg

Inspection Date: 10/10/2012 RC: 33 BIN: 1093672

Inspection Photos in Photo Number Order

Carried: 481I 481I33012078 Crossed: KIRKVILLE RD-CR53 CheckValue: 1,799,362,570

Deck, End Of Bays 4 & 5, looking From Begin To End



Photo Number: 9 Photo Filename: 12DeckEndBay45.jp

Paint



Photo Number: 10 Photo Filename: 12Paint.jpg

Inspection Date: 10/10/2012 RC: 33 BIN: 1093672

Inspection Photos in Photo Number Order

Carried: 481I 481I33012078 Crossed: KIRKVILLE RD-CR53 CheckValue: 1,799,362,570

Begin deck bays 2 and 1.



Photo Number: 11 Photo Filename: Beg21.jpg

Begin deck bays 4 and 3.



Photo Number: 12 Photo Filename: Beg43.jpg

Inspection Date: 10/10/2012 RC: 33 BIN: 1093672

Inspection Photos in Photo Number Order

Carried: 481I 481I33012078 Crossed: KIRKVILLE RD-CR53 CheckValue: 1,799,362,570

Begin deck bays 6 and 5



Photo Number: 13 Photo Filename: Beg65.jpg

End deck bays 1 and 2.



Photo Number: 14 Photo Filename: End12.jpg

Inspection Date: 10/10/2012 RC: 33 BIN: 1093672

Inspection Photos in Photo Number Order

Carried: 481I 481I33012078 Crossed: KIRKVILLE RD-CR53 CheckValue: 1,799,362,570

End deck bays 3 and 4



Photo Number: 15 Photo Filename: End34.jpg

End deck bay 5 and 6.



Photo Number: 16 Photo Filename: End56.jpg

Inspection Date: 10/10/2012 RC: 33 BIN: 1093672

Inspection Sketches in Sketch SysID Order

Carried: 481I 481I33012078 Crossed: KIRKVILLE RD-CR53 CheckValue: 1,799,362,570

Sketch ID: 351210936720000 Sketch Filename: LdRat.12

General Sketch for Bridge
Referenced Photos:

LOAD RATING FIELD CHECK FORM

Region 7 LoadRatingFieldCheckForm

NYSDOT BRIDGE INSPECTION REPORT			
SHEET	1	OF	1

LOAD RATING FIELD CHECK FORM

BIN:	1093672	Insp. Date:	10/10/2012

Dead Load - Note Changes since Last load Rating or state "NONE":

None.

Section Loss - Note locations and amount of loss on each girder or state "NONE":

No changes.

Additional Notes:

None.

Attachments:

None.

Team Leader: Dave Hann

Inspection Date: 10/10/2012 RC: 33 BIN: 1093672

Inspection Sketches in Sketch SysID Order

Carried: 481I 481I33012078 Crossed: KIRKVILLE RD-CR53 CheckValue: 1,799,362,570

Sketch ID: 351210936720001 Sketch Filename: BD241.12

General Sketch for Bridge
Referenced Photos:

Electrical Survey

BD 241

NYSDOT BRIDGE INSPECTION REPORT
SHEET 1 OF 1

Electrical Hazard Survey

Insp. Date:	10/09/2012		BIN:	1093672

Electrical Hazard Classification (Put an X in appropriate box at right)		
		Danger!
		Warning
	X	No Lines Present

Electrical Hazard Alignments (Put an X in all appropriate boxes at right)		
		Parallel Alignment
		Perpendicular Alignment
		Diagonal Alignment

Utility Name	
System Voltage	

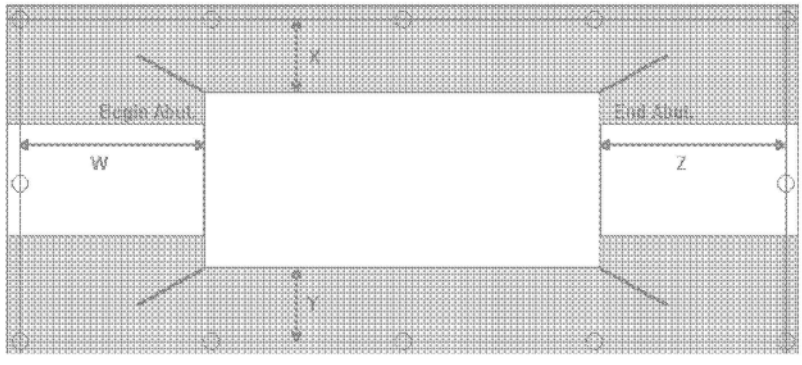

(F

or Clarity, You Must Specify English or Metric Units for Offsets)

Location (Put X where appropriate)	No Lines Present	Above the Deck	Below the Deck	Above and Below	Horizontal Offset	Vertical Offset
Before Begin Abutment (W)	X					
To Left of Bridge (X)	X					
To Right of Bridge (Y)	X					
After End Abutment (Z)	X					

Inspection Date: 10/10/2012 RC: 33 BIN: 1093672

Inspection Sketches in Sketch SysID Order

Carried: 481I 481I33012078 Crossed: KIRKVILLE RD-CR53 CheckValue: 1,799,362,570

Sketch ID: 351210936720002 Sketch Filename: Bin 1093672 - Deck sketch 2012.tif

Span 001 -- Superstructure: Structural Deck -- Rated 3, Was 3
Referenced Photos: "8", "9", "11", "12", "13", "14", "15", "16"

Deck sketch.

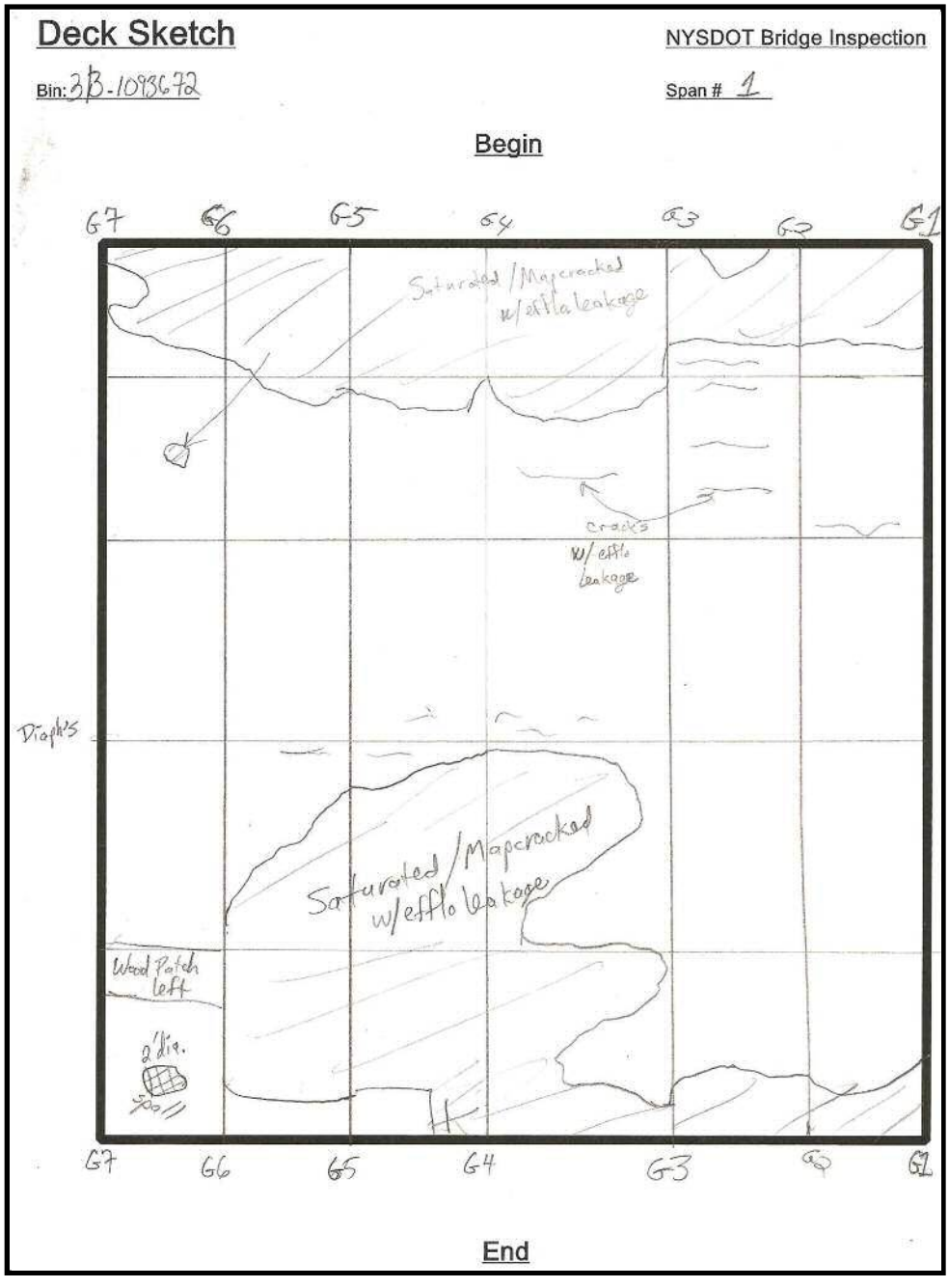

Inspection Date: 10/10/2012 RC: 33 BIN: 1093672

Gen. Rec., Postings, Federal Ratings, etc.

Carried: 481I 481I33012078 Crossed: KIRKVILLE RD-CR53 CheckValue: 1,799,362,570

Overall Condition:

GENERAL RECOMMENDATION: 4

Computed Condition Rating: 4.250

Problems Requiring Action:

FURTHER INVESTIGATION IS NEEDED
Need further invest of deck, ultrasonic pentration radar

NO Flags Issued

POSTINGS:

Inspector Confirmed existing Posting data as correct.
Posted Vertical Clearance ON the bridge is: No Posting
Posted Vertical Clearance UNDER the bridge is: No Posting
No Load Restriction is posted on this bridge

Overloads Observed:

NO Overload Vehicles were observed on this bridge

FEDERAL RATINGS:

NBI Deck Condition: 3
NBI Superstruct Condition: 6
NBI Substruct Condition: 6
NBI Channel Condition: N
NBI Culvert Condition: N

Diving Inspection Needs:

Diving Inspection Required? No Date of Last Diving Inspection: No Date

Inventory Problems:

Inventory Problems Exist? No

Miscellaneous:

Time Required to Inspect Bridge: 7 Hours

Lane Closure Needs: None Required

No Railroad Flagging Required

No Pedestrian Fence

There is a Snow Fence present

The BIN Plate is in DAMAGED condition

Inspection Date: 10/10/2012 RC: 33 BIN: 1093672

Gen. Rec., Postings, Federal Ratings, etc.

Carried: 481I 481I33012078 Crossed: KIRKVILLE RD-CR53 CheckValue: 1,799,362,570

Special Emphasis Inspection Required:

Non-Redundant/Fracture Critical Members - No
Pin and Hangers - No
Fatigue-Prone Welds - No
Non-Categorized Fatigue-Prone Details - No
Other (Specified in Text) - No

Special Emphasis Details:

No Special Emphasis Inspection Required.

General Notes To the Next Inspector:

Bin plate is on the begin and end stems.

Improvements Observed:

Inspection Date: 10/10/2012 RC: 33 BIN: 1093672

Review Progress and Personnel Present at Inspection

Carried: 481I 481I33012078 Crossed: KIRKVILLE RD-CR53 CheckValue: 1,799,362,570

Inspection Submission Status:

Submitted to QC Engineer on: 11/1/2012
QC Submission Number: 553210

QC Review Completed: 11/21/2012
QC Engineer: James R. Manning

Submitted to Liaison Engineer on: 11/21/2012
Liaison Submission Number: 53238

Liaison Review Completed: 11/28/2012
Liaison Engineer: TODD M. HERMANN

Submitted for BIIS Processing on: 11/28/2012
BIIS Submission Number: .kp1

Current Status: Keypunched, Sent to BIIS
Check Value: 1,799,362,570

Personnel Present During Inspection:

David Hann - Team Leader
Steve Grabosky - Assistant Team Leader

Inspection Date: 10/10/2012 RC: 33 BIN: 1093672

Inspection Access Requirements

Carried: 481I 481I33012078 Crossed: KIRKVILLE RD-CR53 CheckValue: 1,799,362,570

Equipment Required for Inspection

No Access Requirement Changes Noted During This Inspection.
This Listing is from the Inventory Database.

ACCESS CATEGORIES FOR ENTIRE BRIDGE
Required: Walking, Extension Ladder, Small Lift, Shadow Vehicle

ACCESS CATEGORIES FOR SPAN 1
Required: Walking, Extension Ladder, Small Lift, Shadow Vehicle

Inspection Date: 10/10/2012 RC: 33 BIN: 1093672

Culvert Measurements

Carried: 481I 481I33012078 Crossed: KIRKVILLE RD-CR53 CheckValue: 1,799,362,570

Culvert Measurements

NO CULVERT DATA FOR BIN 1093672

Standard Photos **RC: 33 BIN: 1093672**

Carried: 481I 481I33012078 Crossed: KIRKVILLE RD-CR53

1093672_LOCATION_MAP.JPG

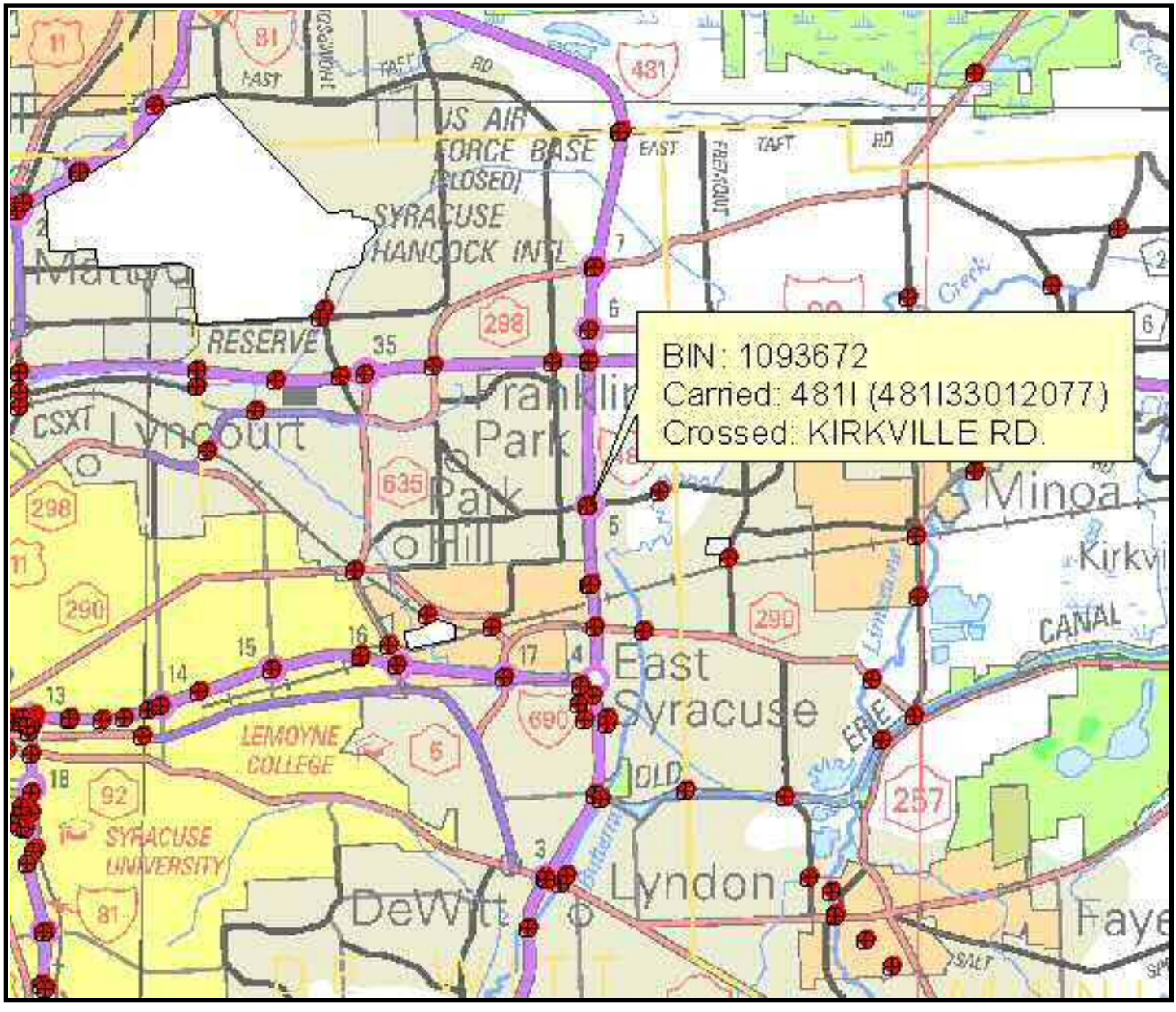

Standard Photos **RC: 33 BIN: 1093672**

Carried: 481I 481I33012078 Crossed: KIRKVILLE RD-CR53

1093672_QUAD_MAP.JPG

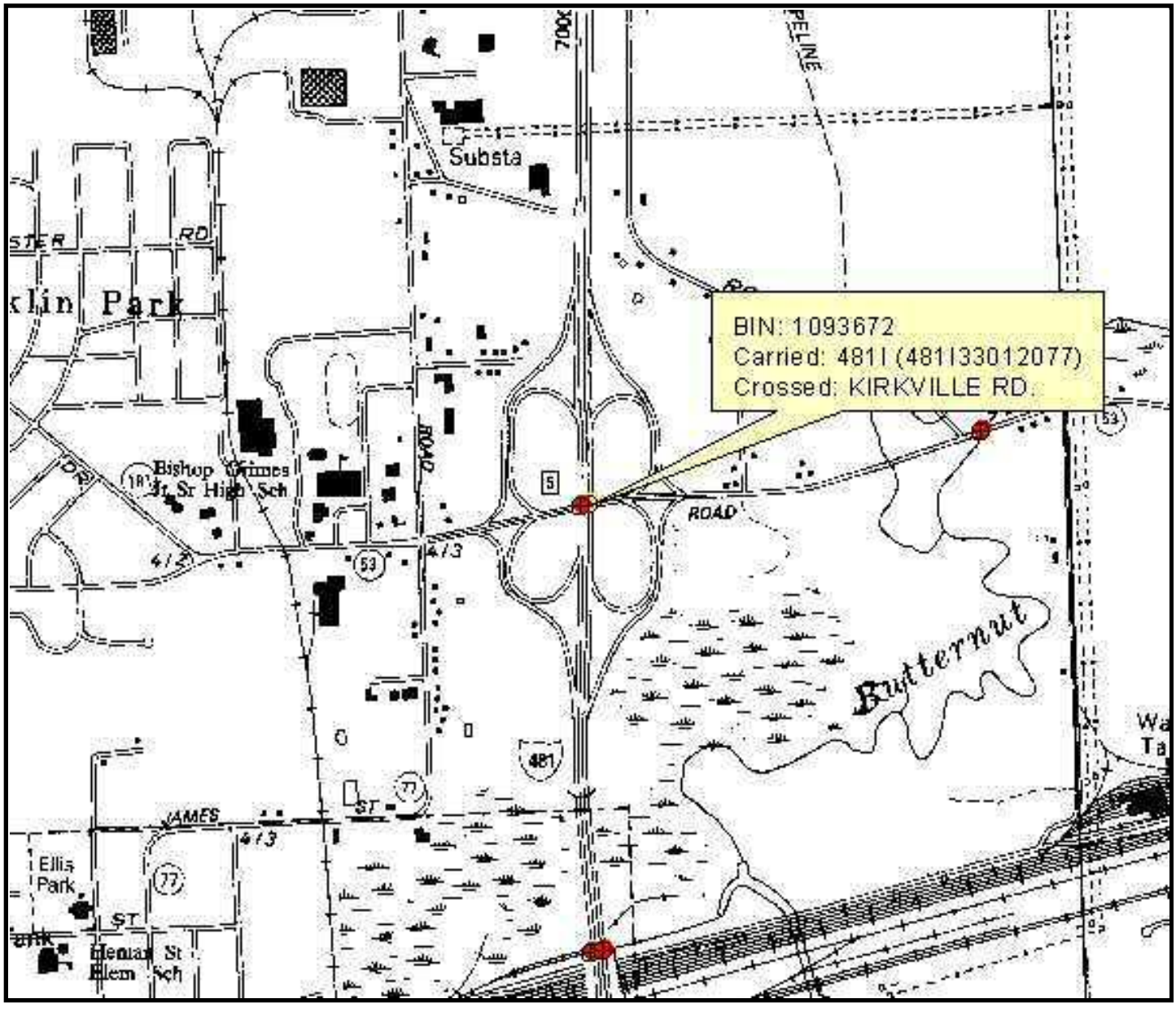

Standard Photos **RC: 33 BIN: 1093672**

Carried: 481I 481I33012078 Crossed: KIRKVILLE RD-CR53

BeginAbutment12.jpg

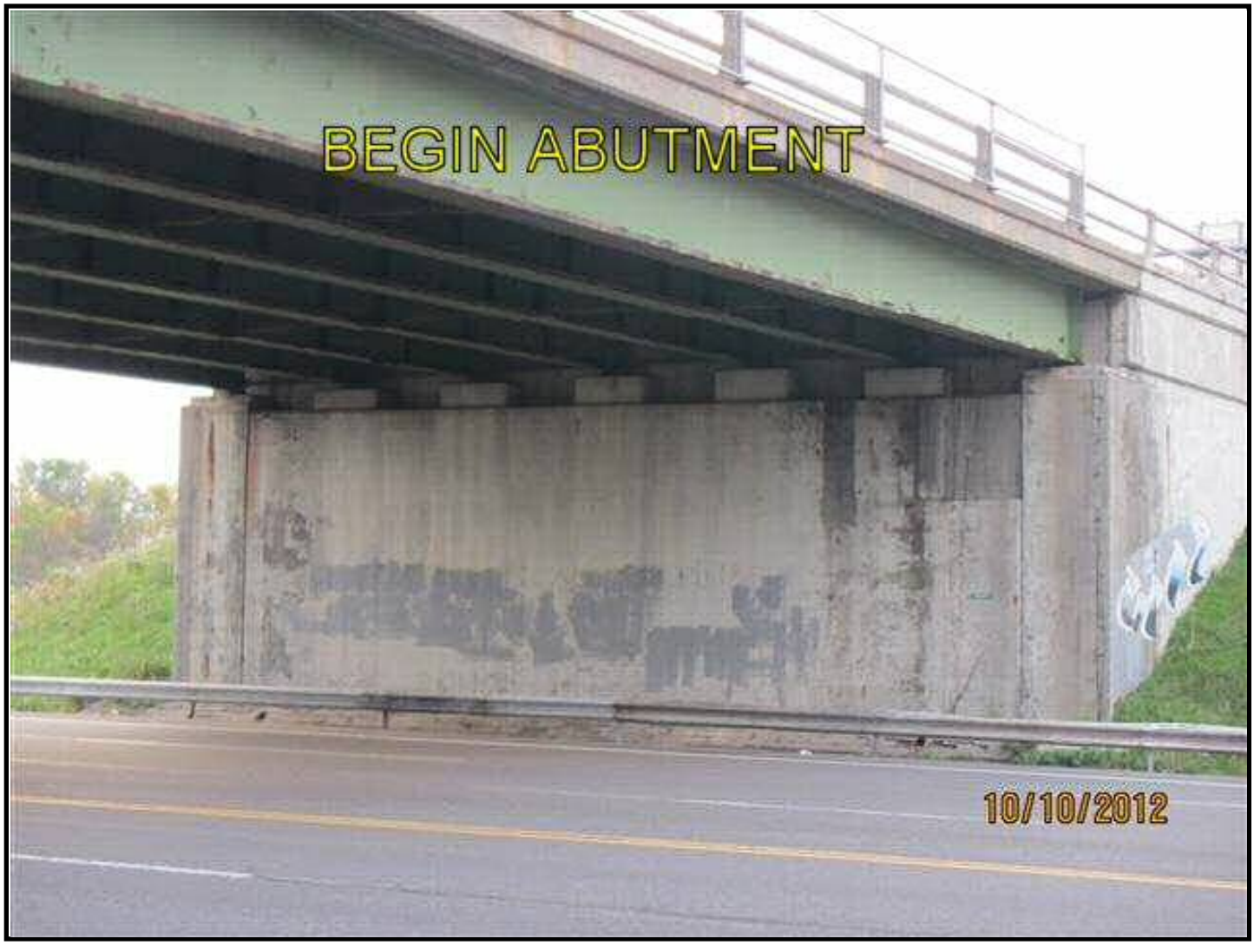

Standard Photos **RC: 33 BIN: 1093672**

Carried: 481I 481I33012078 Crossed: KIRKVILLE RD-CR53

BeginApproach12.jpg



Standard Photos **RC: 33 BIN: 1093672**

Carried: 481I 481I33012078 Crossed: KIRKVILLE RD-CR53

EndApproach12.jpg



Standard Photos **RC: 33 BIN: 1093672**

Carried: 481I 481I33012078 Crossed: KIRKVILLE RD-CR53

EndLeftWingwall12.jpg



F2Left12.jpg



Standard Photos **RC: 33 BIN: 1093672**

Carried: 481I 481I33012078 **Crossed: KIRKVILLE RD-CR53**

F2Right12.jpg



Standard Photos **RC: 33 BIN: 1093672**

Carried: 481I 481I33012078 Crossed: KIRKVILLE RD-CR53

RightElevation12.jpg



Underside12.jpg



STANDARD PHOTOS

Standard Photos

I-481 NB over Kirkville Rd., BIN 1093672



DESCRIPTION: ABUTMENT BEGIN

PHOTO 1



DESCRIPTION: ABUTMENT END

PHOTO 2

Standard Photos

I-481 NB over Kirkville Rd., BIN 1093672



DESCRIPTION: APPROACH BEGIN

PHOTO 3



DESCRIPTION: APPROACH END

PHOTO 4



DESCRIPTION: ELEVATION LEFT

PHOTO 5



DESCRIPTION: ELEVATION RIGHT

PHOTO 6



DESCRIPTION: FRAMING – LOOKING FROM BEGIN TO END

PHOTO 7



DESCRIPTION: TOP OF DECK – LOOKING FROM BEGIN TO END

PHOTO 8

LEVEL 1 LOAD RATING SUMMARY SHEET

Region/County Region 3/Onondaga BIN 1093672
Feature(s) Carried and Crossed I-481 Northbound/Kirkville Road
Date of field inspection upon which Level 1 rating is based 1/8/2014

OVERALL BRIDGE RATINGS (BASED ON LOWEST RATED ELEMENTS):

Total number of rating units 1

	H inventory	H operating	HS inventory	HS operating
Rating	H 31.41 (tons)	H 52.46 (tons)	HS 49.43 (tons)	HS 82.55 (tons)
Lowest rated element	Exterior Girders G1 and G7	Exterior Girders G1 and G7	Exterior Girders G1 and G7	Exterior Girders G1 and G7

Analysis method LFR Comments

Individual Rating Unit Level 1 values:

Rating unit span(s) 1

Main member ratings

	H inventory	H operating	HS inventory	HS operating
Rating	H (tons)	H (tons)	HS (tons)	HS (tons)
Lowest rated element				

Analysis method Comments

Floorbeam ratings

	H inventory	H operating	HS inventory	HS operating
Rating	H (tons)	H (tons)	HS (tons)	HS (tons)
Lowest rated element				

Analysis method Comments

Stringer ratings

	H inventory	H operating	HS inventory	HS operating
Rating	H 31.41 (tons)	H 52.46 (tons)	HS 49.43 (tons)	HS 82.55 (tons)
Lowest rated element	Exterior Girders G1 and G7	Exterior Girders G1 and G7	Exterior Girders G1 and G7	Exterior Girders G1 and G7

Analysis method LFR Comments

Certified by Date

Quality Control Engineer Signature Date
Agency or Company represented by certifier

Note:
-If connection ratings govern, record them under stringer ratings for stringer – floorbeam connection, floorbeam ratings for floorbeam-main member connections, etc.
-When Level 1 results indicated the need for load posting or other corrective action, the NYSDOT Regional Structures Engineer shall be notified immediately.
-Load ratings should be filed in the regional office within 60 days of completion of calculations.
-Bridges shall be flagged based on Level I results in accordance with the current NYSDOT flagging procedure.
-Bridge load posting, closure, etc. determinations shall be made as results are being produced.

PARSONS

100 Broadway
New York, NY 10005
Phone: 212-266-8300
Fax: 212-571-6825
www.parsons.com

TECHNICAL MEMORANDUM

FROM: Kian Siang Chau, P.E
NYSPE 082744

DATE: MARCH 19, 2014

RE: SEISMIC SCREENING SUMMARY
NEW YORK STATE DEPARTMENT OF TRANSPORTATION
D031085; PIN 3501.60; I-81

BIN: 1093672 (I-481 NB/Kirkville Rd)

This memorandum summarizes the seismic screening conducted for BIN 1093672 as part of the Interstate 81 Project in Syracuse, NY. The purpose of the screening is to determine if seismic retrofits are warranted at the superstructure to substructure connection, and if further seismic evaluation of the structure is required. This memorandum will give the screening results, retrofits required and recommendations for further seismic evaluation of the structure.

SCREENING PROCEDURE

The seismic screening was performed in accordance with the FHWA Seismic Retrofitting Manual for Highway Structures: Part 1 - Bridges, January 2006. As per the referenced manual, seismic screenings were performed for both lower level and upper level earthquake ground motion. The lower level earthquake ground motion has a reasonable likelihood of occurrence within the life of the bridge (50% probability of exceedance within a 75 year bridge life). The upper level earthquake ground motion has a finite likelihood of occurrence within the life of the bridge (7% probability of exceedance within a 75 year bridge life).

Values for the spectral acceleration for the Syracuse area used in the screening are as follows:

- Lower Level Earthquake Ground Motion for a Short Period (0.2 seconds): $S_S = 0.0251$
- Lower Level Earthquake Ground Motion for a Long Period (1.0 seconds): $S_1 = 0.0076$
- Upper Level Earthquake Ground Motion for a Short Period (0.2 seconds): $S_S = 0.139$
- Upper Level Earthquake Ground Motion for a Long Period (1.0 seconds): $S_1 = 0.047$

These values are considered constant and are the same for all seismic screenings of bridges in the Syracuse area.

The Site Class is based on the soil conditions at the bridge location. It was determined that this parameter has little effect on the results of the seismic screening because the spectral acceleration values for the Syracuse area are small. Based on this, a site class of D was used for all seismic screenings of bridges in the Syracuse area.

Bridge parameters used in the seismic screening were retrieved from the record drawings and WinBolts data.

The seismic screening takes into account the anticipated service life, importance, and the seismic exposure of the bridge to determine a seismic retrofit category (SRC). The SRC is then used to determine seismic evaluation methods and retrofit measures. There are four SRCs, A through D. Seismic retrofit category A is the lowest category; bridges in this category do not require retrofits or further seismic evaluation. Seismic retrofit category D is the highest category; bridges in this category requiring the most rigorous seismic evaluations and retrofits.

SCREENING RESULTS

The SRC for the bridge is "**C**" for lower level earthquake ground motion and "**B**" for upper level earthquake ground motion.

RETROFITS REQUIRED

No seismic retrofits are required for the bridge superstructure to substructure connection.

RECOMMENDATIONS FOR FURTHER SEISMIC EVALUATION

For the lower level earthquake ground motion, it is recommended that capacity/demand ratios for bridge components are calculated as per Section 5.4 of the referenced manual. For the upper level earthquake ground motion, it is recommended that the capacities of the bearings are checked as per Section 5.2 of the referenced manual.

Retrofit cost estimates will be provided after any further required seismic evaluations are completed.

IN-DEPTH INSPECTION REPORT

D031085 P.I.N. 3501.60

ELEMENT SPECIFIC BRIDGE WORK

B.I.N. 1093681

TEAM LEADER Andrew P. Thompson 84914
NYSPE LICENSE #

ASSISTANT TEAM LEADER Mike Savino

FEATURE CARRIED I481 Southbound

FEATURE CROSSED I90

DATE FIELD WORK BEGAN 12/19/13

DATE FIELD WORK COMPLETED 2/25/14

TABLE OF CONTENTS

- STRUCTURE IDENTIFICATION
- INTRODUCTION
- PROJECT LOCATION MAP
- IN-DEPTH CONDITION DOCUMENTATION
- PLANS & SKETCHES
- IN-DEPTH PHOTO DOCUMENTATION
- ASBESTOS SAMPLING SURVEY
- LATEST BIENNIAL INSPECTION REPORT

STRUCTURE IDENTIFICATION

a. Bridge Identification Number (BIN): 1093681
b. Reference Marker: 481I 3301 2088
c. Region: NYSDOT Region 3
d. County: Onondaga
e. Town: Dewitt
f. Feature Carried: I481 Southbound
g. Feature Crossed: I90

INTRODUCTION

a. Bridge History
   i. Year Built: 1972
   ii. Bridge Type: Two Span, Steel Multi-girder
   iii. Span 1 Length: 100 feet
   iv. Span 2 Length: 100 feet
   v. Out-to-Out Width: 51 feet
   vi. Structural Ratings and Rankings
      1. Federal Sufficiency: 82.9 (October 2012)
      2. Condition Rating: 4.625 (October 2012)
      3. General Recommendation: 5
   vii. Live Load Posting (HS25): No
   viii. National Highway System (NHS): Yes
   ix. Previous work Done: Widen bridge & concrete overlay (1985). Overlay, new joints, new bearings & concrete repairs (2000). Repair bearings (2003). Superstructure painted (2013).
   x. Planned Future Work: N/A
b. Highway Classification
   i. Functional Classification: Urban Principle Arterial - Interstate
   ii. Traffic Volumes

YEAR	AADT Projected
2014	21658
2034	32183
2054	47823

   iii. Plan for Maintenance and Protection of Traffic: Maintenance and Protection of traffic will be achieved by staged construction.

PROJECT LOCATION MAP



IN-DEPTH CONDITION DOCUMENTATION

NYS DEPT. OF TRANSPORTATION BRIDGE **BIN** 1093681 **SHEET:** 1 **OF** 4 **DATE:** 2/25/2014

FEATURE CARRIED: I-481 SB
FEATURE CROSSED: I-90

TEAM LEADER: A.THOMPSON
A. TEAM LEADER: M. SAVINO

ITEM	REMARKS	PHOTO N0.
TP 349-22	Begin Abutment - Joint with Deck: The begin joint is expansion. The seal is in fair condition. The begin header has hairline cracking spaced at +/-2' in the right shoulder, right lane, and right half of the center lane (Photo 1). The remainder of the header is in good condition. No leakage was noted from below.	1
TP 349-23	End Abutment - Joint with Deck: The end joint is expansion. The steel armor plates are rusted with no significant section loss, and there is a gap noted between the compression seal and the header for the right 2/3 of its length (Photo 2). The header is in good condition. Some leakage was noted from below (Photos 3 and 4).	2-4
TP 349-27	End Abutment – Seats and Pedestals: There is a 2 sf cracked and hollow area on the end seat in Bay 3 adjacent to the stem (Photo 4). There is a similar condition in Bay 2. The pedestals are in good condition. See End Abutment Deterioration Sketch.	4
TP 349-28	Begin Abutment – Backwall: There is a full height ¼" wide crack at the left corner with a 1' dia. spall at the top (Photo 5). The concrete is hollow sounding for a full height x 10" wide area. There is a 1/16" wide x 15" long vertical crack at the top in Bay 1 with a few shorter cracks stemming from it (Photo 6). No hollowness was found in this location.	5,6
TP 349-29	End Abutment – Backwall: There is a 6" long x 1/16" wide horizontal crack at the top left in Bay 5 with no hollowness (Photo 7). There is a 2' long diagonal crack at the right with 2 sf of hollowness (Photo 8). The remainder of the backwall is in good condition with scattered hairline cracking and staining.	7,8
TP 349-30	Begin Abutment – Stem: There is a 4 sf hollow area under Bay 3 (Photo 9) and a 3' high x 6" wide cracked area at the left (Photo 10). The remainder of the stem is in good condition with isolated hairline cracking.	9,10
TP 349-31	End Abutment – Stem: The end stem has 5 hollow areas and several cracks as shown in the End Abutment Deterioration Sketch (Photos 4 and 11).	4,11

ITEM	REMARKS	PHOTO N0.
TP 350-21	Spans 1 and 2 - Deck Elements - Sidewalks and Fascias: Sidewalks: Snow was removed from the safety walks at both ends of the spans as well as a few locations along the span for inspection. The left concrete safety walk appears in good condition. The right concrete safety walk has map cracking throughout (Photo 12).	12
	Fascias: The fascias have scattered map cracking (Photo 13). The left fascia has a 1/16" wide x 2' long crack under the 4th snow fence post in Span 1 (Photo 14). The right fascia has a 1' long x 5" x 3" deep spall at the end of Span 1 with hollowness surrounding it (Photo 15).	13-15
TP 350-22	Spans 1 and 2 - Deck Elements – Railings/Parapets: The right box beam bridge railing in Span 2 at the end of the snow fence has a loose bolt in the bottom rail but is solid (Photo 16). The remainder of the right and the entire left bridge railing are in good condition. Snow fencing is present over the I-90 travel lanes and median on both sides of the bridge. The snow fence consists of 11 steel pipe posts in each span located at rail posts, steel pipe rails, and chain link fencing. On the left in Span 1 the bottom pipe rails at Posts 7, 8, and 9 are rusted through and detached on one or both sides (Photo 17). On the left in Span 2 the bottom pipe rail at Post 4 is rusted through and detached on the end side. On the right in Span 2 the bottom pipe rails at Posts 1 and 6 are rusted through and detached on both sides. The bottom rails at several other posts throughout both spans are rusted but intact. The remainder of the snow fencing is in good condition.	16,17
TP 350-27	Spans 1 and 2 - Superstructure – Structural Deck: The structural deck is a 9.5" thick concrete mono deck with SIP forms. No hollow areas, cracked areas, or patches were found (Photo 18). The original 8" deck was rehabed in 2004 down to the top rebar mat. The deck has SIP forms, and the underside is exposed only at the overhangs and at the haunches adjacent to the abutment backwalls. The deck has spalling with exposed rebar at the begin left corner of Span 1 and the end left corner of Span 2. The spall at the begin left is 3' long x 3" wide x 5" deep (Photo 19). The spall at the end left is 2' long x 1' wide triangular and 5" deep (Photo 20). Both spalls have exposed rebar. The remainder of the overhangs have map cracking and transverse hairline cracking throughout (Photo 21). The haunch at the end abutment has a 1.5' long x 6" high x 3" deep spall in Bay 5 (Photo 7). The remainder of the haunch area has only hairline cracking.	7, 18-23

ITEM	REMARKS	PHOTO N0.
TP 350-27 (cont.)	The SIP forms in both spans have surface rust, mostly in the first three bays, but are in good condition (Photos 22, 23).	7, 18-23
TP 350-28	Spans 1 and 2 - Superstructure – Primary Members: The steel girders are in good condition with no significant section loss (Photos 22 and 23)	22,23
TP 350-30	Spans 1 and 2 - Superstructure – Paint: The girders and diaphragms have been painted since the 2012 Biennial Inspection, and the paint is in good condition (Photos 22-25).	22-25
TP 350-33	Pier – Bearings: The fixed bearings on the pier have been painted since the 2012 Biennial Inspection (Photo 24). The begin right bolt is sheared off on Bearing 4 (Photo 25). The remainder of the bearings are in good condition.	24,25
TP 350-34	Pier – Pedestals: Pedestal 6 has up to 1/16” wide cracking on its vertical faces but no hollow sounding surfaces (Photo 24). The remaining pedestals are in good condition.	24
TP 350-37	Pier – Cap Beam: The cap beam is cracked and hollow on the end face at the top in Bays 2 and 5. The area in Bay 2 is 2.5’ long x 13” high with a 3/16” wide crack and extends into the seat 6” (Photo 26). The area in Bay 5 is 3.5’ long x 1’ high and extends into the seat 11” (Photo 27). There is 1/16” wide cracking and light spalling.	26,27

NYS DEPT. OF
TRANSPORTATION BRIDGE

BIN 1093681

SHEET: 4 OF 4
DATE: 2/25/2014

FEATURE CARRIED: I-481 SB
FEATURE CROSSED: I-90

TEAM LEADER: A.THOMPSON
A. TEAM LEADER: M. SAVINO

ITEM	REMARKS	PHOTO N0.
	Special Emphasis Inspection Required Non-Redundant/Fracture Critical Members - No Pin and Hangers - No Fatigue-Prone Welds - No Non-Categorized Fatigue-Prone Details - No Other - No	

PLANS & SKETCHES

10936

D25

FED. RD. FED. NO.	STATE	FEDERAL AID PROJECT NO.	SHEET NO.
	NEW YORK	I-481-2(152)	289

Interstate Rte 481 Extension (I-481)
Collamer Interchange to Northern Blvd
Onondaga County

CAPITAL PROJECT IDENTIFICATION NO. 3107.C

INDEX

DRAWING TITLE	
PLAN & PROFILE	2
ESTIMATE & NOTES	3
EXCAVATION & BACKFILE	4
NORTH ABUTMENT	5,6
PIER	8
SOUTH ABUTMENT	9,10
SUPERSTRUCTURE	12,13
LOW STEEL BEARINGS	14
RAILING LAYOUT	15
SOD GUTTER DETAILS	16
MISCELLANEOUS DETAILS	17
SUBSURFACE PROFILE	20
JOINT DETAILS	21,22
BAR LISTS	23,24

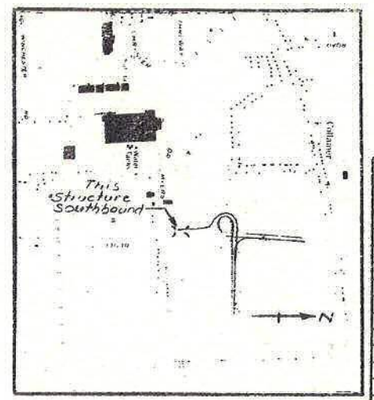

LOCATION MAP
SYRACUSE EAST QUADRANGLE
Scale: 1"=2000'

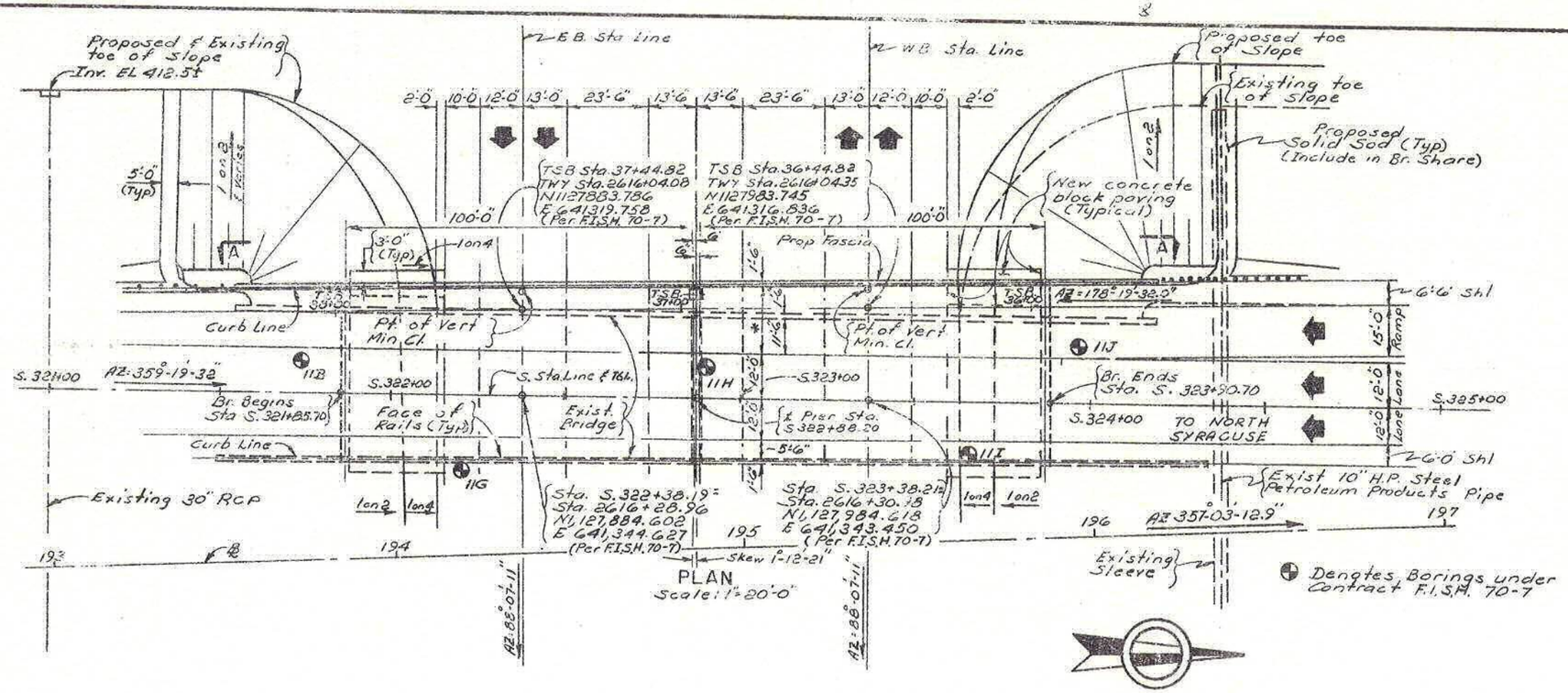

PLAN
Scale: 1"=20'-0"

Denotes Borings under Contract F.I.S.H. 70-7

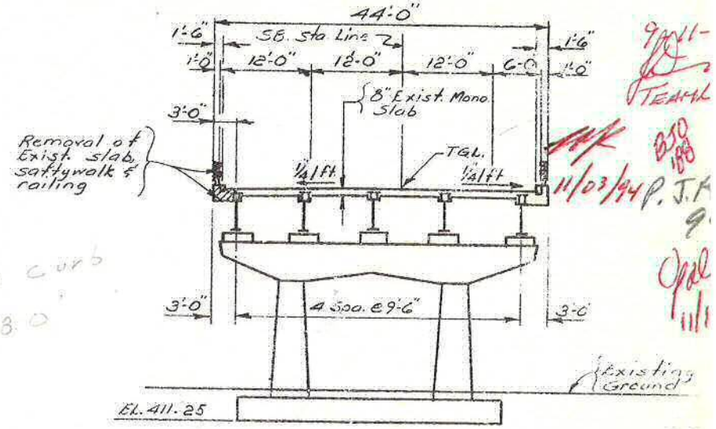

EXISTING BRIDGE SECTION
Scale 1"=10'-0"

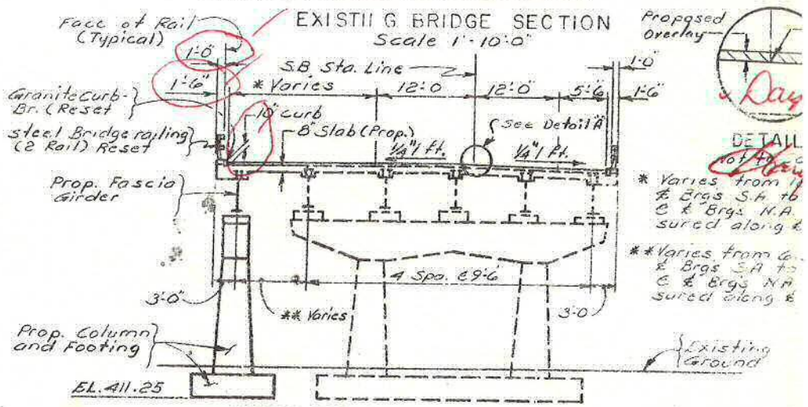

PROPOSED BRIDGE SECTION
Scale 1"=10'-0"

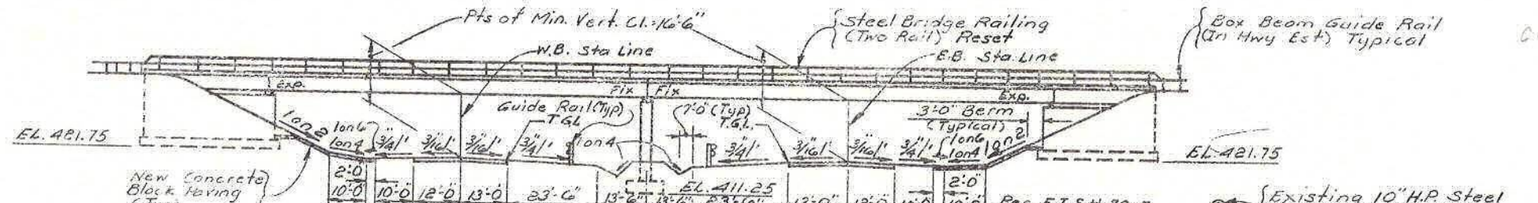

SECTION A-A
Scale: 1"=20'-0"

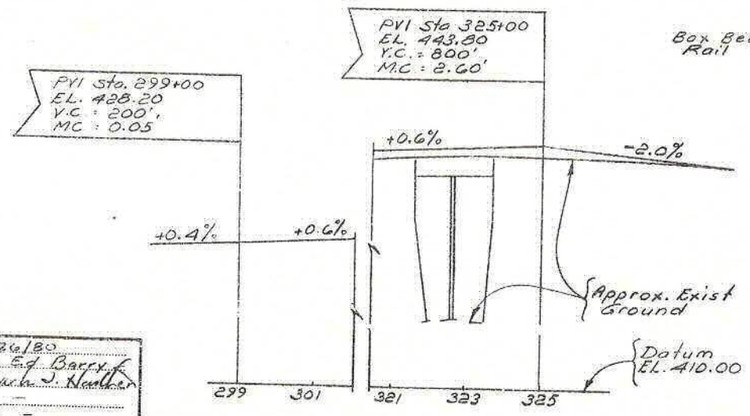

EXISTING PROFILE-ROUTE I481 S.B.
Scale: Horiz. 1"=200', Vert 1"=20'-0"

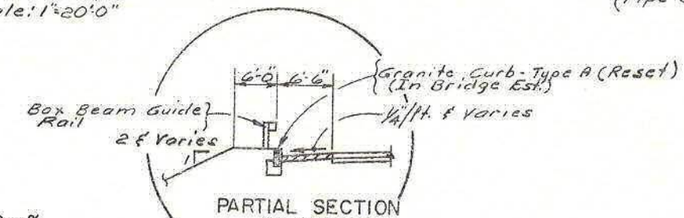

PARTIAL SECTION AT BRIDGE
Scale: 1" = 10'-0"

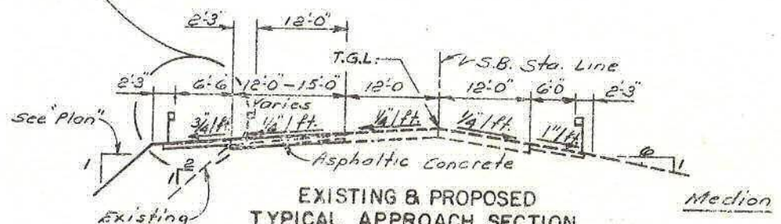

EXISTING & PROPOSED TYPICAL APPROACH SECTION
Scale: 1"=10'-0"

DETAIL A
Not to Scale

* Varies from 1' at Brgs S.A. to 0 at Brgs N.A. measured along ℄

** Varies from 6" at Brgs S.A. to 0 at Brgs N.A. measured along ℄

DATE MADE 8/26/80
PROJECT ENGINEER C.J. Barry Jr.
IN CHARGE OF Mark J. Heather
DESIGNED BY
DESIGN CHECKED BY
DETAILED BY D. Lee Rapone
DETAIL CHECKED BY

D.J. Horn 11/18/10

B.I.N. - 1093681

STATE OF NEW YORK
DEPARTMENT OF TRANSPORTATION
DIVISION OF CONSTRUCTION

SOUTHBOUND I-481 OVER N.Y.S. THRUWAY

PLAN & PROFILE

D250094

FED RD REG NO.	STATE	FEDERAL AID PROJECT NO.	SHEET NO.	TOTAL SHEET
	NEW YORK	I-481-2(152)	294	312

Interstate Rte. 571 Extension (I-481)
Collamer Interchange to Northern Blvd.
Onondaga County

CAPITAL PROJECT IDENTIFICATION NO.

NORTH ABUTMENT		
LOCATION	ITEM 555.01	ITEM 555.02
POUR A	——	38.95 CY
POUR B	——	36.69 CY
POUR C	——	15.31 CY
POUR D	.33 CY	——
POUR E	.81 CY	——
POUR F	.15 CY	——
POUR G	.02 CY	——
TOTALS	1.31 CY	90.95 CY

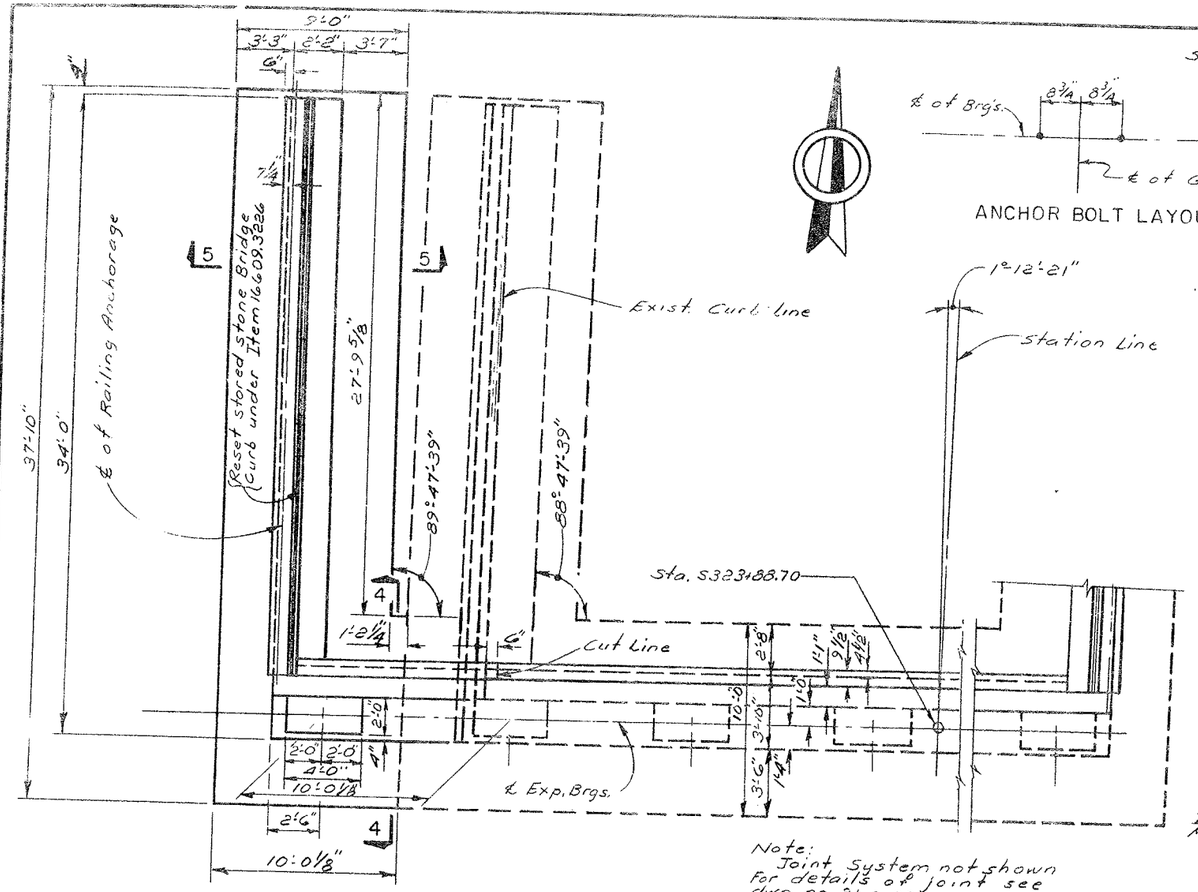

PARTIAL PLAN
Scale: ¼"=1'-0"

ANCHOR BOLT LAYOUT

Note:
Joint System not shown
For details of joint see
dwg. no. 21 & 22.

PARTIAL ELEVATION
Scale: ¼"=1'-0"

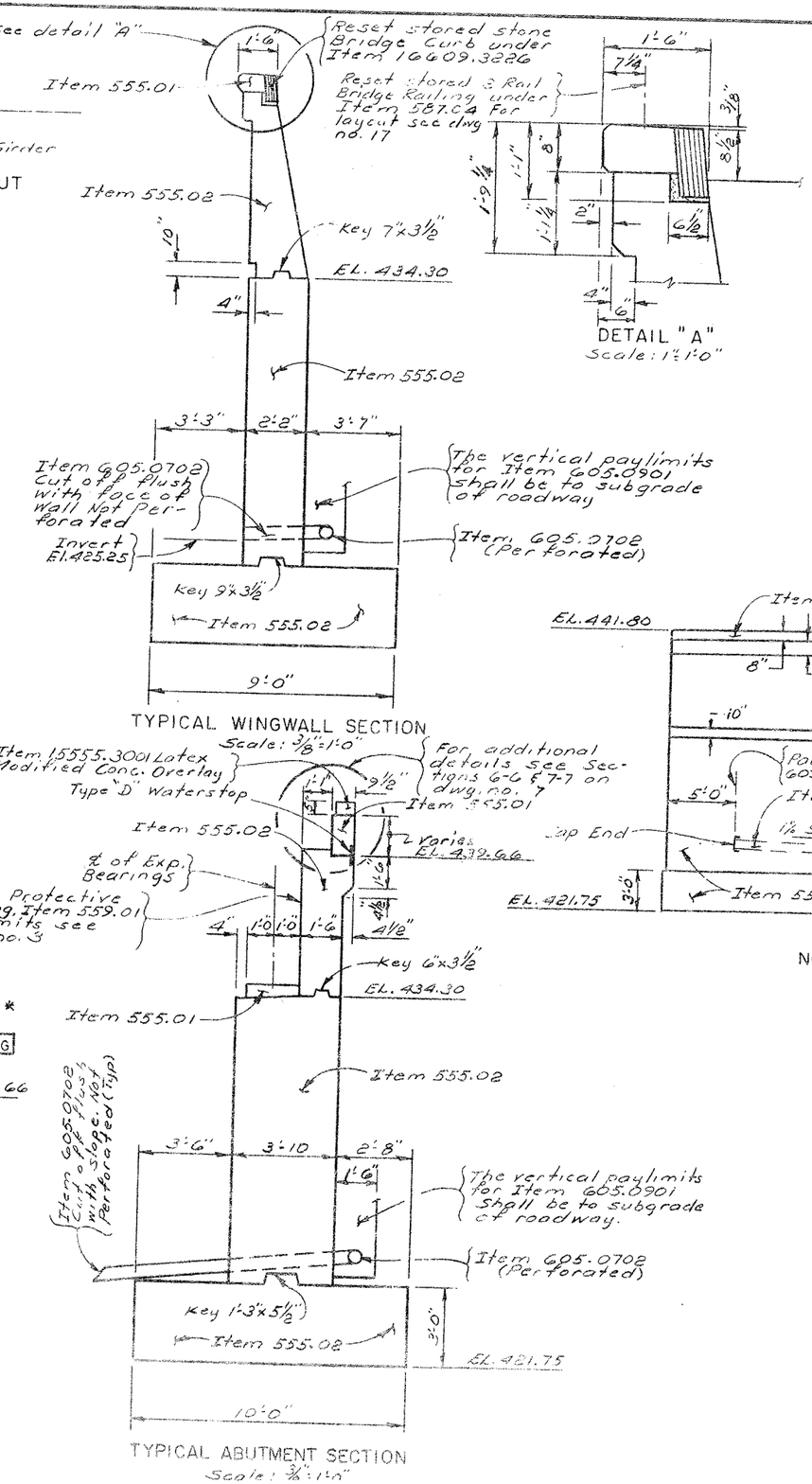
See detail "A"
1'-6"
Reset stored stone Bridge Curb under Item 16609.3226
Item 555.01
Reset stored 3 Rail Bridge Railing under Item 587.04 For layout see dwg no. 17
Item 555.02
Key 7"x3½"
EL. 434.30
10"
4"
Item 555.02
3'-3"
2'-2"
3'-7"
Item 605.0702 Cut off Flush with face of Wall Not Perforated
Invert El. 425.25
The vertical paylimits for Item 605.0901 shall be to subgrade of roadway
Item 605.0702 (Perforated)
Key 9"x3½"
Item 555.02
9'-0"
Item 555.01
Item 555.02
Item 555.01
Item 555.02
Item 555.02
Item 555.01
Item 555.02
Item 555.01
Item 555.02
Item 555.02
Item 555.01
Item 555.02
Item 555.01
Item 555.02
Item 555.01

DETAIL CHECKED BY D. Hurster

D250094

FED. RD. REG. NO.	STATE	FEDERAL AID PROJECT NO.	SHEET NO.	TOTAL SHEETS
	NEW YORK	I-481-2(152)	296	312

Interstate Rte. 571 Extension (I-481)
Collamer Interchange to Northern Blvd.
Onondaga County

CAPITAL PROJECT IDENTIFICATION NO.

NOTE:
For details of Bearing and Anchor Bolts see Drawing No. 16

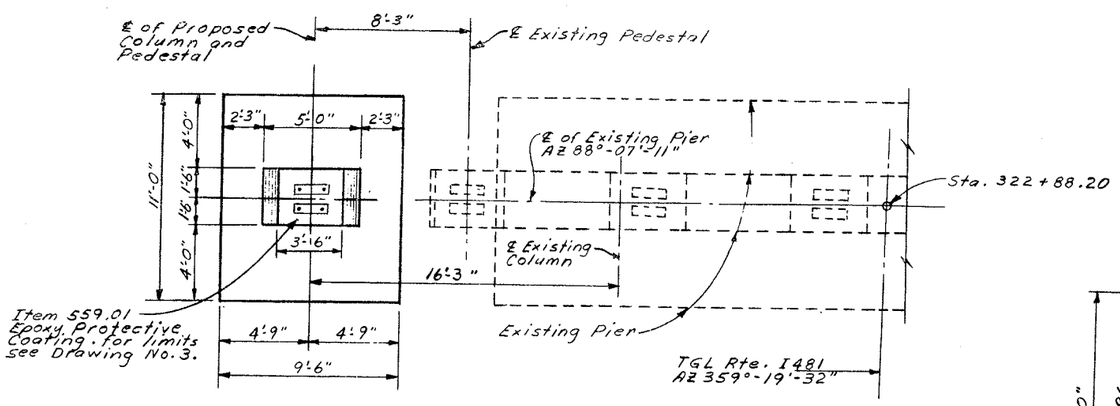

PLAN
Scale 1/4" = 1'-0"

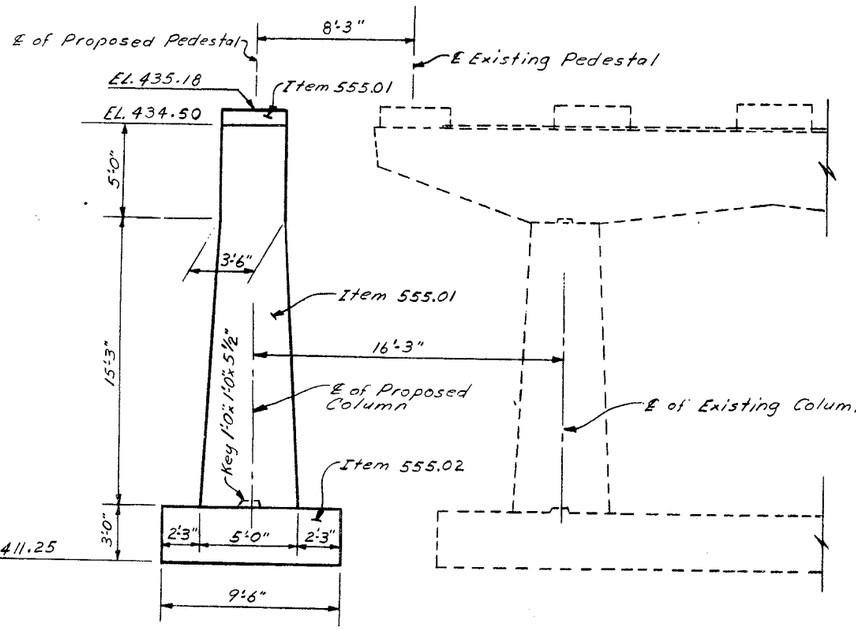

ELEVATION
Scale: 1/4" = 1'-0"

	CONCRETE	
LOCATION	ITEM 555.01	ITEM 555.02
FOOTING	———	11.61 C.Y.
COLUMN	9.15 C.Y.	———
PEDESTAL	.26 C.Y.	———
TOTAL	9.41 C.Y.	11.61 C.Y.

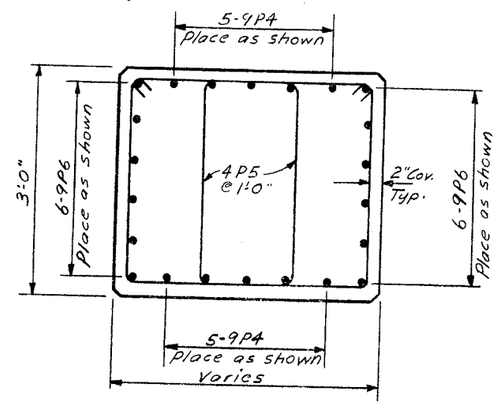

SECTION 1-1
Not to Scale

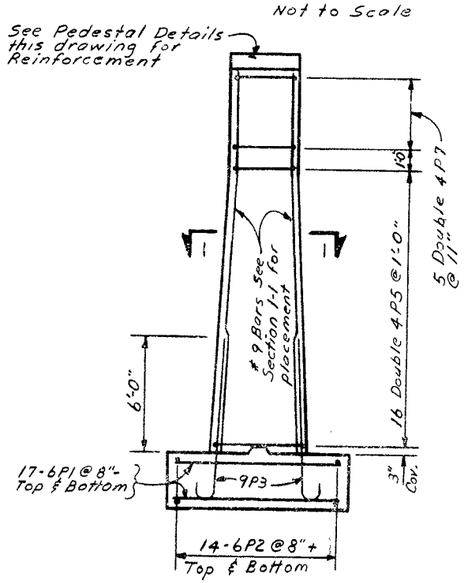

ELEVATION
Not to Scale

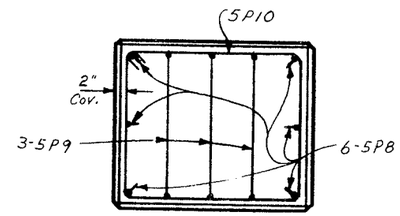

PLAN

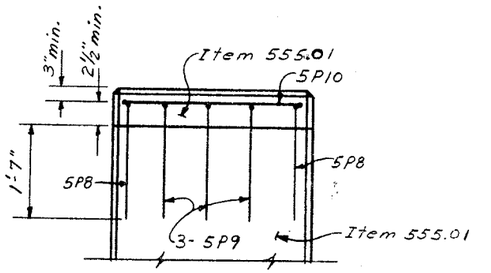

ELEVATION

PEDESTAL DETAILS
Not to Scale

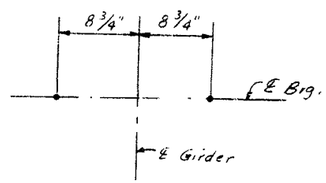

ANCHOR BOLT LAYOUT
Not to Scale

NOTES:

The Contractor's attention is directed to the possibility of the soil described as silty fine sand and silt; fine gravelly being easily disturbed by construction traffic and precipitation upon exposure. Provision is, therefore, made for an undercut to construct a working platform of compacted Item No. 203.21 at the proposed pier should this become necessary. The Regional Soils Engineer shall be notified to be present during the final foot of excavation to the proposed pier footing elevation. The Regional Soils Engineer shall inspect the exposed soil at the proposed pier footing elevation and determine the need for and extent of a one(1') foot under cut to construct a working platform of compacted Item No. 203.21. The undercut recommended by the Regional Soils Engineer shall not exceed one(1') foot without the prior approval of the Deputy Chief Engineer (Structures).

For design purposes the foundation pressure at the extension does not exceed 2½ Tons per Square foot.

STATE OF NEW YORK
DEPARTMENT OF TRANSPORTATION
DIVISION OF DESIGN AND CONSTRUCTION

SOUTHBOUND I-481 OVER
N.Y.S. THRUWAY

DIER

1093681

D2500

FED. RD. REG. NO.	STATE	FEDERAL AID PROJECT NO.	SHEET NO.
	NEW YORK	I-481-2(152)	303

Interstate Rte. 571 Extension (I-481)
Collamer Interchange to Northern Blvd.
Onondaga County

CAPITAL PROJECT IDENTIFICATION NO.

Welding Notes
# F.P.G.W. = Full Penetration Groove Weld
M.B. = Mill to Bear

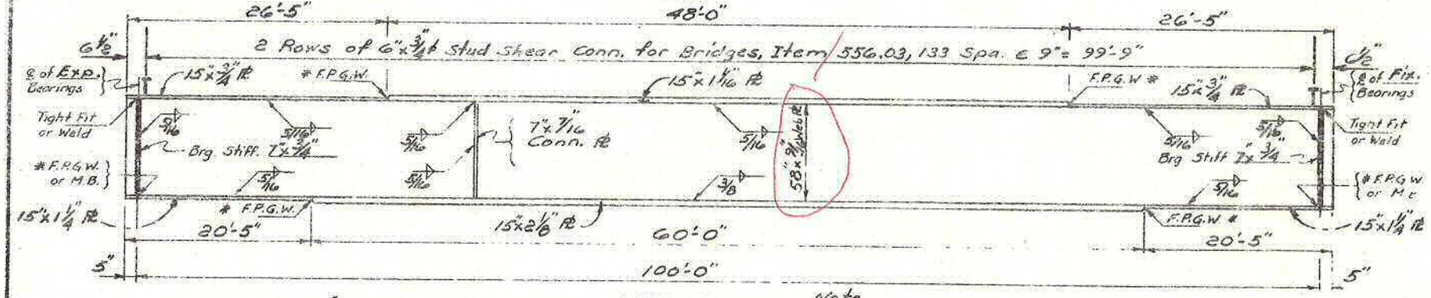

GIRDER DETAIL
Not to Scale

Note
Flange Thickness Transition shall conform to New York State Steel Construction Manual.

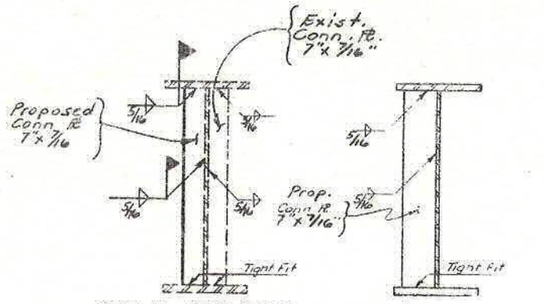

CONN. PL. – EXIST. GIRDER
CONN. PL. – FASCIA GIRDER

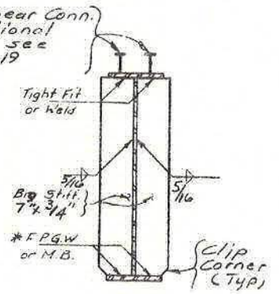

BRG. STIFF.
GIRDER SECTIONS
Not to Scale

DESIGN LOAD TABLE/GIRDER

	UNIT	LOAD/FT
D.L.	SLAB	.969 K/Ft.
	HAUNCH	.039 K/Ft.
	GIRDER	.247 K/Ft.
	S.I.P. FORMS	.147 K/Ft.
	DIAPHRAGMS	.030 K/Ft
	TOTAL	1.432 K/Ft.
S.D.L.	SAFETYWALK	.063 K/Ft.
	RAILING	.013 K/Ft.
	FUT. WEAR. SURF.	.184 K/Ft.
	TOTAL	.260 K/Ft.

Assumed Live Load = HS 20-44

MOMENT & SHEAR TABLE

PROPOSED FASCIA GIRDERS			℄ BRG	MID PT
	D.L.	Moment	0	1709
		Shear	70	0
	S.D.L.	Moment	0	325
		Shear	13	0
	L.L.(+)	Moment	0	1552
		Shear	66.5	0

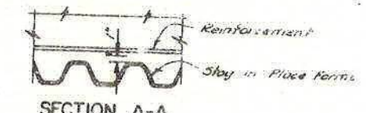

SECTION A-A
Not to Scale

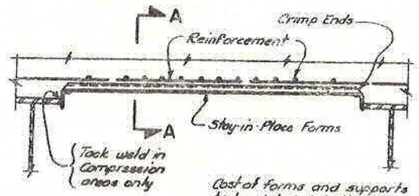

Cost of forms and supports to be included in the price bid for Item 555.0401

DETAILS OF STAY-IN-PLACE FORMS
Not to Scale

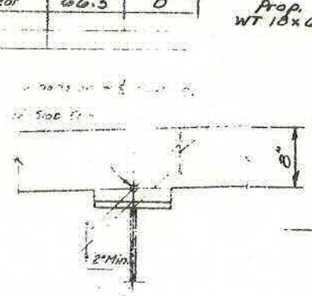

GIRDER HAUNCH DETAIL
Not to Scale

CAMBER TABLE

PROP. FASCIA GIRDERS		
DUE TO	Vertical Curve (Ft).	.041
	Steel D.L. (Ft)	.032
	Concrete D.L. (Ft)	.148
	Superimposed D.L. (Ft)	.021
	Total (Ft)	.242

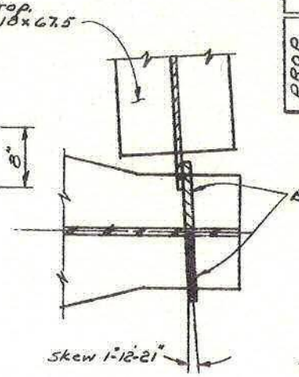

DETAIL "D"
Not to Scale

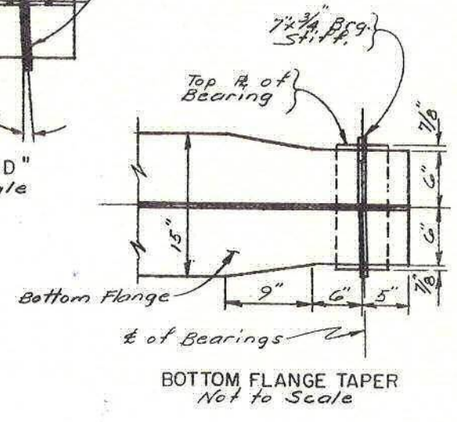

BOTTOM FLANGE TAPER
Not to Scale

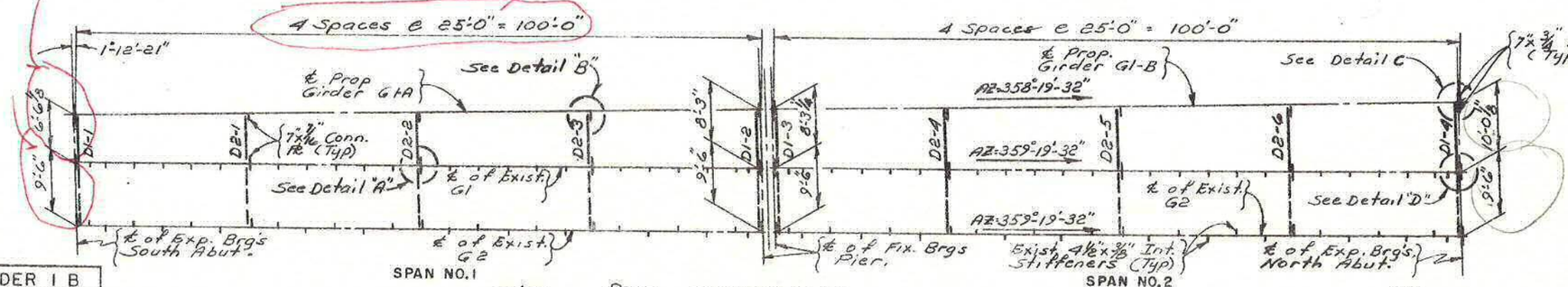

FRAMING PLAN
Not to Scale

GIRDER 1A			GIRDER 1B		
	℄ BRG.	MID. PT.	℄ BRG.	℄ BRG.	MID. PT.	℄ BRG.
(A) Req'd Bottom of Slab Elevation	440.51	440.61	440.63	440.63	440.56	440.41
(B) Top of Steel Elev. (Field Measure)						
(C) = (A) - (B)						
(D) Concrete + S.D.L. Deflection	0	0.17 Ft	0	0	0.17 Ft	0
(E) Depth of Haunch req'd (C) + (D) (Ft.)						

D.L. = Dead Load
S.D.L. = Superimposed Dead Load
L.L. = Live Load
Live Load moments and shears include impact.
Moments are expressed as foot kips
Shears are expressed as kips.

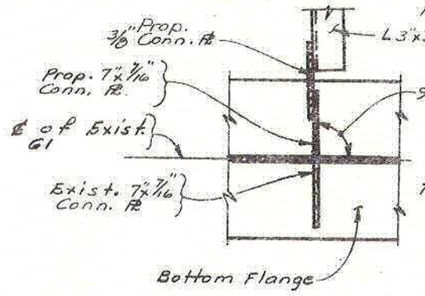

DETAIL "A"
Not to Scale

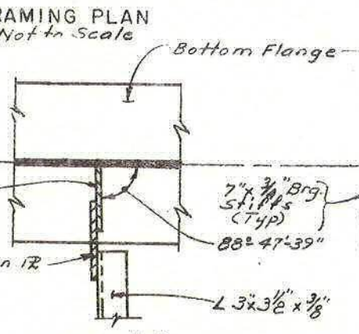

DETAIL "B"
Not to Scale

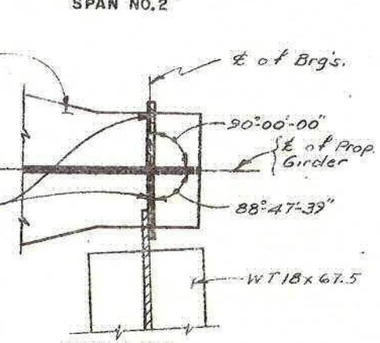

DETAIL "C"
Not to Scale

Notes
The ends of all girders and the bearing stiffaners shall b vertical. All connection plates may be perpendicular to t top flange for stud shear connector details See Dwg. No. 1

All girder flanges and webs shall be ASTM A-572. All other detail steel shall be ASTM A-36.

All structural steel shall be paid for under Item 11.0504

The structural steel shall be cleaned and primed under Item 570.0101.

The final 2 coats of paint shall be paid for under Item 570

STATE OF NEW YORK
DEPARTMENT OF TRANSPORTATION
DIVISION OF CONSTRUCTION

SOUTHBOUND I-481 OVER N.Y.S. THRUWAY

SUPERSTRUCTURE (PROPOSED) (4 OF 4

PROJ. ENG. [illegible] DATE MADE

DESIGNED BY M. A. Price DETAILED BY [illegible] DESIGN CHECKED BY John Sarah DETAIL CHECKED BY B. Worster

FED ROAD REG. NO.	STATE	CONTRACT NO.	SHEET NO.	TOTAL SHEETS
1	N.Y.	D258367	111	354

INTERSTATE BRIDGE DECK OVERLAY PROJECT
VARIOUS BRIDGES ON I-690, I-81 AND I-481
ONONDAGA AND OSWEGO COUNTIES

P.I.N. 3804.06 B.I.N. 1093681 & 2

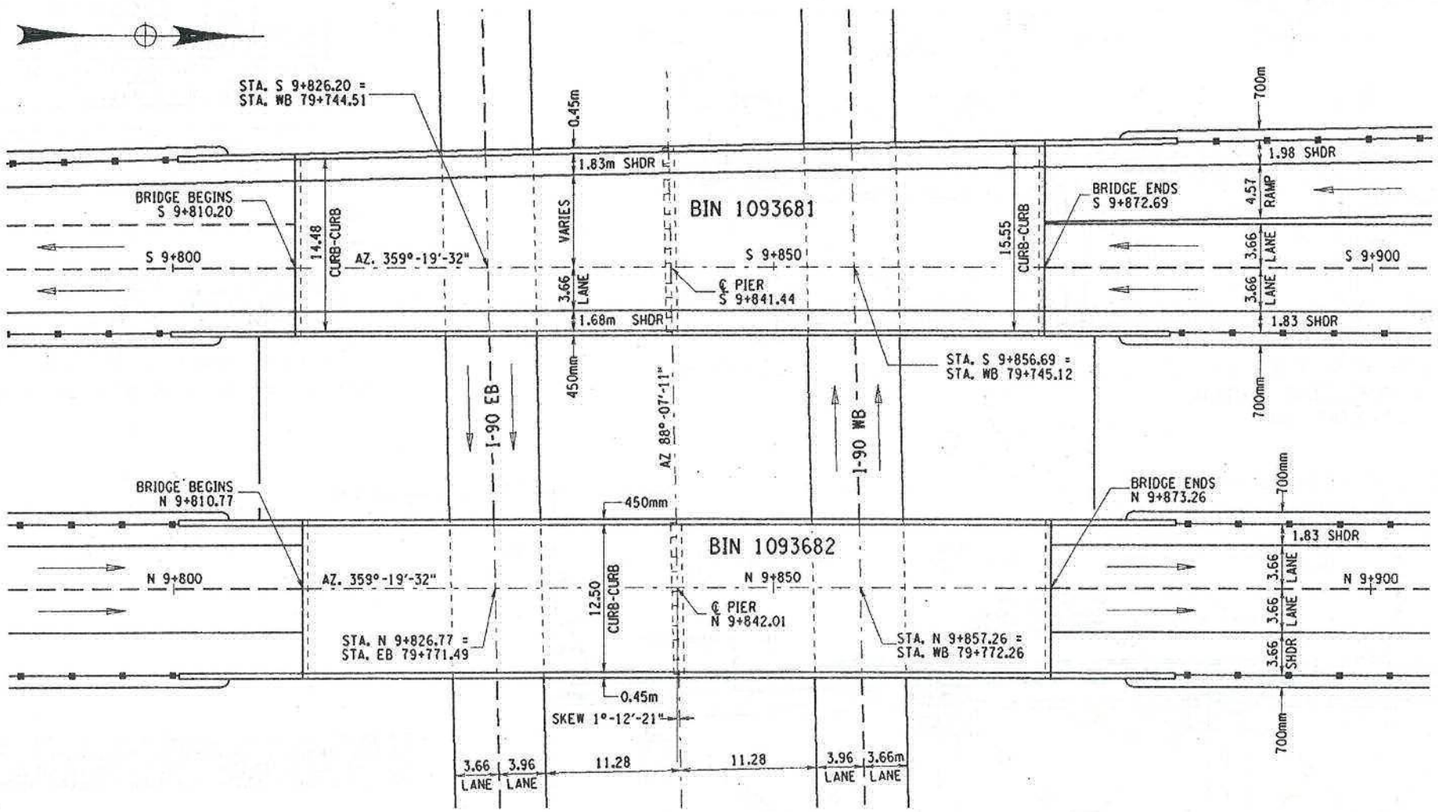

PLAN VIEW
SCALE: 1 TO 250

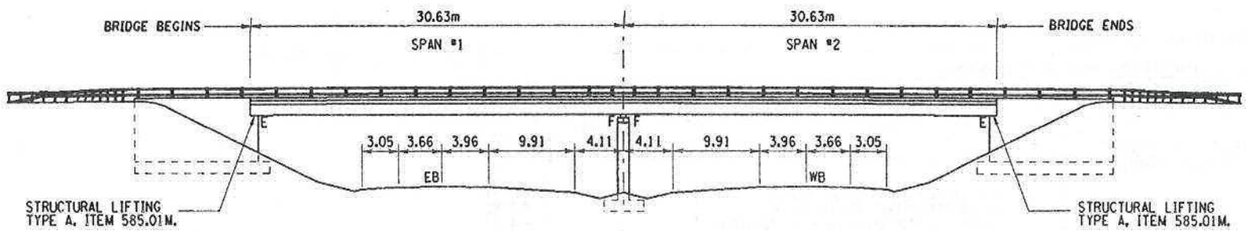

ELEVATION VIEW
SCALE: 1 TO 250

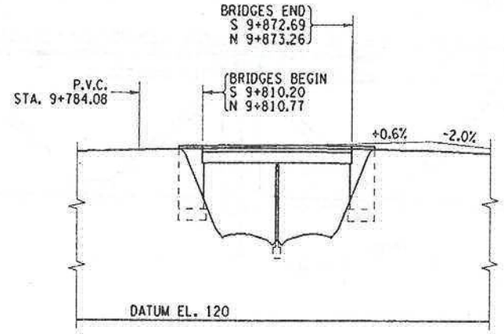

WORK TO BE DONE: (NOT NECESSARILY IN THIS ORDER)

1. REMOVE EXISTING CONCRETE WEARING SURFACE.
2. REMOVE EXISTING JOINTS.
3. EXPOSE RE-BARS ON 100% OF DECK AREA.
4. PLACE SLAB RECONSTRUCTION CONCRETE AND NEW CONCRETE OVERLAY.
5. PLACE NEW MAC JOINTS.
6. REPLACE EXISTING ABUTMENT BEARINGS.
7. PERFORM CONCRETE REPAIRS TO FASCIA.
8. REPLACE EXISTING BRIDGE RAIL AND RAIL TRANSITIONS.

BEARING LOADS		
	ITEM 585.01M (ABUT.) SPAN #1	ITEM 585.01M (ABUT.) SPAN #2 ABUTMENT
REACTION DUE TO DEAD LOAD	350 KN	350 KN
MAX. LL + I REACTION	250 KN	250 KN

MS LOAD RATING (LFD)	
INVENTORY	OPERATING
MS-17.23 (30.84 MT)	MS-33.56 (60.78 MT)

NOTE:

IF THE CONTRACTOR ELECTS TO LIFT ONLY ONE GIRDER AT A TIME PER SPAN (TO A MAXIMUM OF 3mm TO REMOVE LOAD FROM BEARING), NO VEHICULAR TRAFFIC RESTRICTIONS WILL BE REQUIRED AS STATED IN SPECIFICATION SECTION 585 - STRUCTURAL LIFTING OPERATIONS.

ALL DIMENSIONS ARE IN m UNLESS OTHERWISE NOTED

AS BUILT REVISIONS

SIGNATURE DATE

I-481 OVER I-90

GENERAL PLAN VIEW AND ELEVATION

STATE OF NEW YORK
DEPARTMENT OF TRANSPORTATION

FILENAME	REGION	DATE	DRAWING NO.
3804066B.G1B	3	12/99	GB-1

DESIGNED BY ____ CHECKED BY ____
DRAFTED BY ____
ESTIMATED BY ____
JOB MANAGER ____
DESIGN SUPERVISOR ____
USER = gshubo

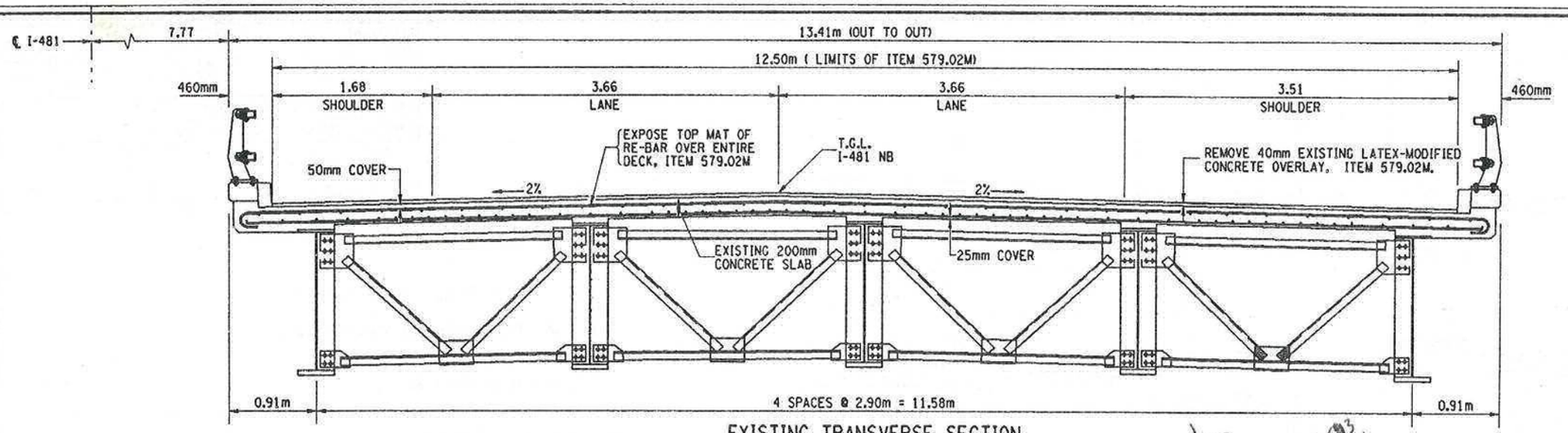

EXISTING TRANSVERSE SECTION
BIN 1093682 - NB

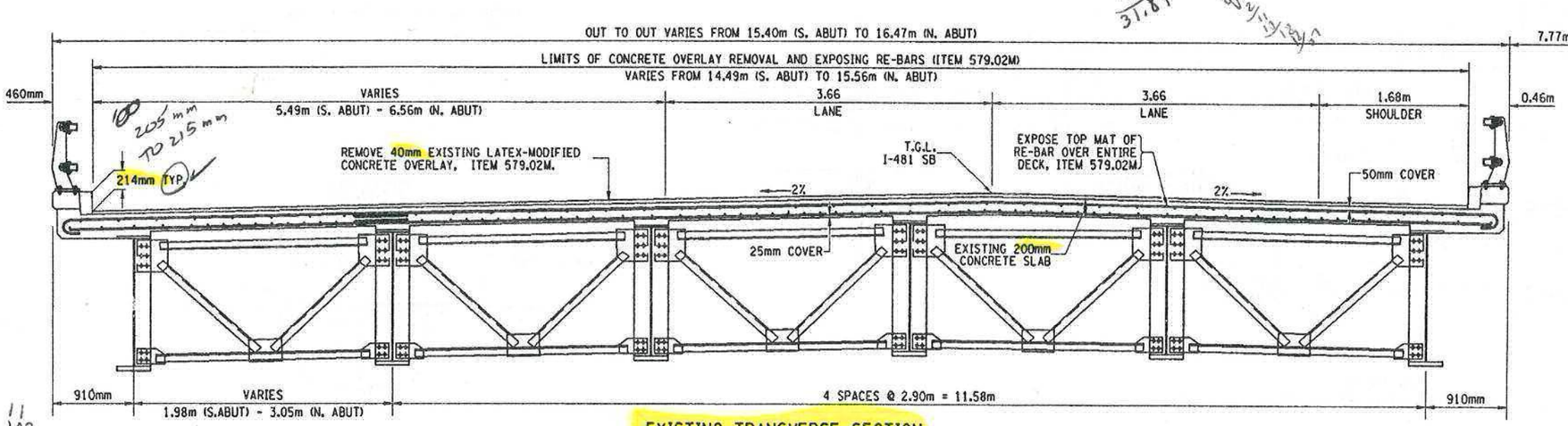

EXISTING TRANSVERSE SECTION
BIN 1093681 - SB

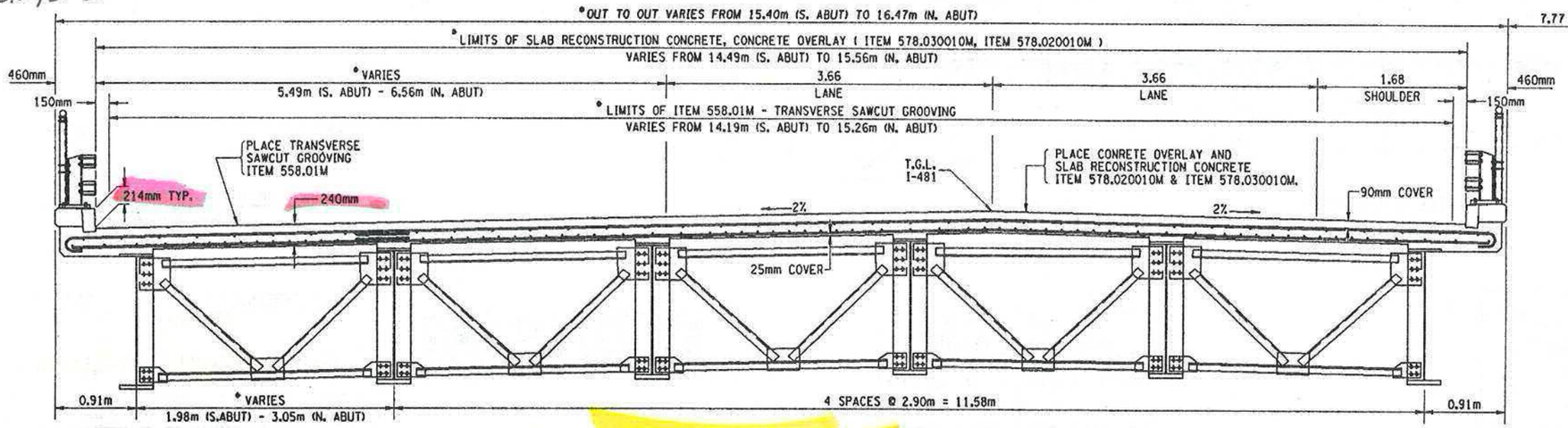

PROPOSED TRANSVERSE SECTION
BIN 1093681 (SB) SHOWN - BIN 1093682 (NB) SIMILAR

FED ROAD REG. NO.	STATE	CONTRACT NO.	SHEET NO.	TOTAL SHEETS
1	N.Y.	D258367	112	354

INTERSTATE BRIDG DECK REPAIR PROJECT
VARIOUS BRIDGES ON I-690, I-81 AND I-481
ONONDAGA AND OSWEGO COUNTIES

P.I.N. 3804.06 | B.I.N. 1093681 & 2

NOTES

1. SINCE THE OVERLAY ITEMS ARE SERIALIZED, ITEMS 578.030010M, AND 578.020010M SHALL BE USED FOR BIN 1093681, WHEREAS ITEMS 578.030011M AND 578.020011M SHALL BE USED FOR BIN 1093682.
2. FOR DECK REINFORCING DETAILS SEE DWG. SS-2.
3. FOR PROPOSED BRIDGE RAILING DETAILS SEE DWG. GB-10.

* FOR BIN 1093682, THESE DIMENSIONS DO NOT VARY. THE DIMENSION FOR ITEM 558.01M IS 12.20m AND THE DIMENSION FOR THE OVERLAY ITEMS AND THE SEALER ITEM (ITEMS 578.030010M, 578.020010M, AND 18559.1896M) IS 12.50m. THE OUTSIDE SHOULDER WIDTH IS 3.51m.

ALL DIMENSIONS ARE IN m UNLESS OTHERWISE NOTED

AS BUILT REVISIONS

SIGNATURE DATE

I-481 OVER I-90

EXISTING AND PROPOSED TRANSVERSE SECTIONS

STATE OF NEW YORK
DEPARTMENT OF TRANSPORTATION

FILENAME	REGION	DATE	DRAWING NO.
380406GB.T1A	3	1/00	GB-2

DRAFTED BY ____ CHECKED BY ____ ESTIMATED BY ____ CHECKED BY ____ DESIGNED BY ____ JOB MANAGER ____ DESIGN SUPERVISOR ____

FED ROAD REG. NO.	STATE	CONTRACT NO.	SHEET NO.	TOTAL SHEETS
1	N.Y.	D258367	113	354

INTERSTATE BRIDGE DECK OVERLAY PROJECT
VARIOUS BRIDGES ON I-690, I-81 AND I-481
ONONDAGA AND OSWEGO COUNTIES

P.I.N. 3804.06 | B.I.N. 1093681 & 2

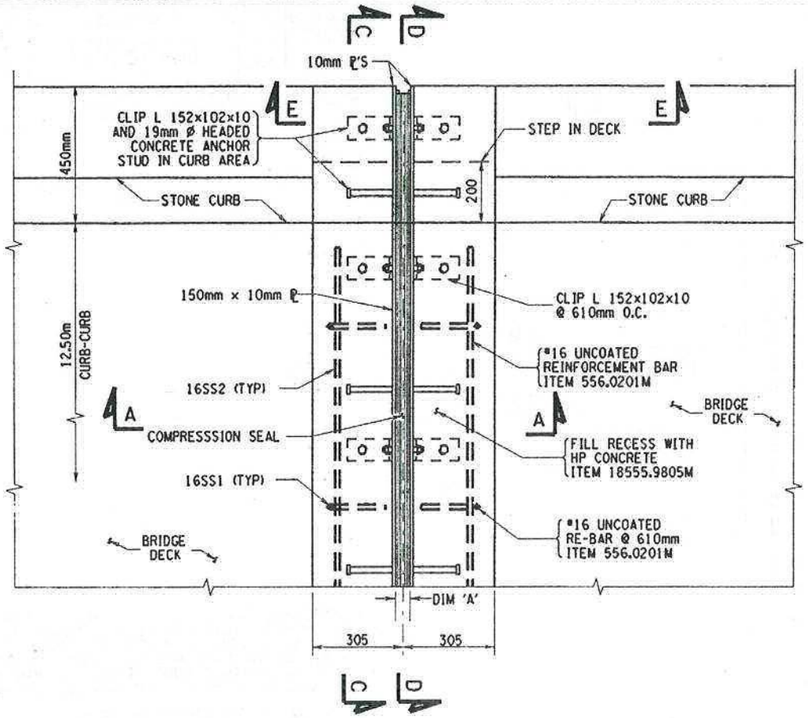

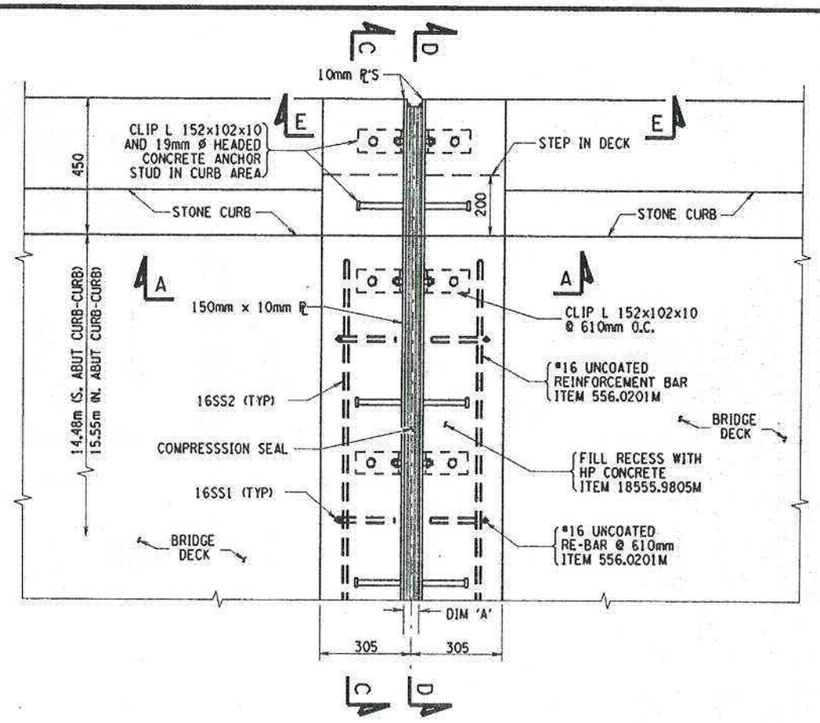

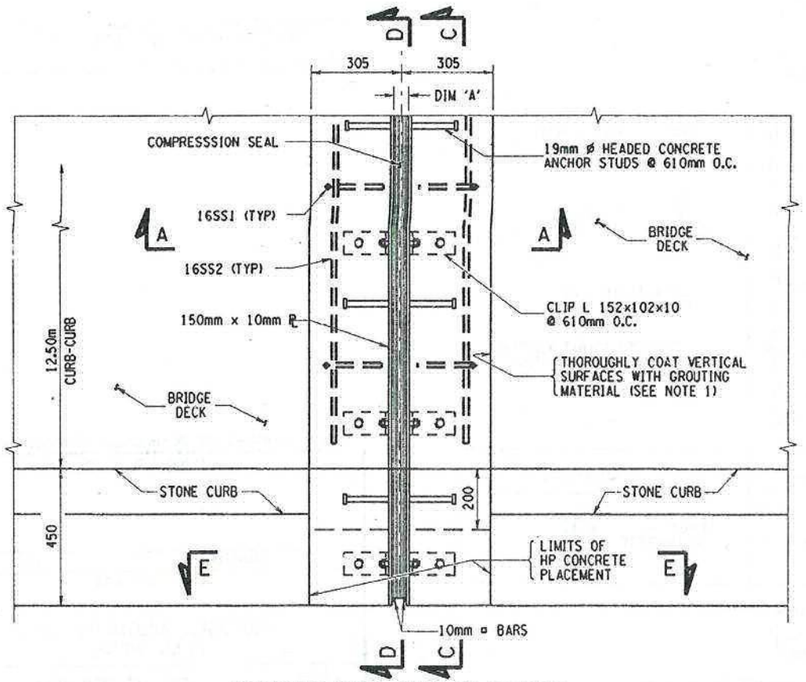

PROPOSED PIER JOINT PLAN VIEW
BIN 1093682 - PIER 1
SCALE: 1 TO 10

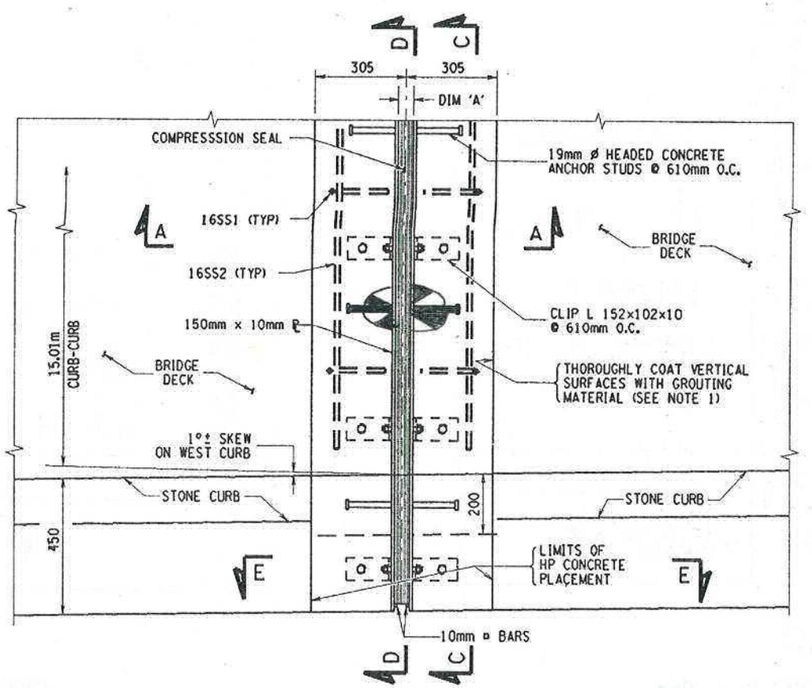

PROPOSED PIER JOINT PLAN VIEW
BIN 1093681 - PIER 1
SCALE: 1 TO 10

NOTES:

1. THOROUGHLY COAT THE BOTTOM AND VERTICAL SURFACES OF THE RECESS WITH MATERIAL SPEC. 721-03, EPOXY POLYSULFIDE GROUT, OR MATERIAL SPEC. 705-22, PORTLAND CEMENT MORTAR BONDING GROUT. THE COST OF FURNISHING AND PLACING THE MATERIAL SHALL BE INCLUDED IN THE PRICE BID FOR ITEM 18555.9805M.
2. SECTION A-A IS LOCATED ON DWG. GB-5.
3. SECTIONS C-C, D-D AND E-E ARE LOCATED ON DWG. GB-6
4. FOR GENERAL MAC JOINT DETAILS, SEE DWG. JT-3.
5. FOR PROPOSED MAC JOINT SIZE AND ITEM NUMBER FOR EACH JOINT, SEE JOINT TABLE ON DWGS. JT- 1-2.
6. FOR DETAILS OF THE ABUTMENT JOINTS, SEE DWG. GB-4.

ALL DIMENSIONS ARE IN mm UNLESS OTHERWISE NOTED

AS BUILT REVISIONS

SIGNATURE DATE

I-481 OVER I-90

PROPOSED PIER JOINT PLAN VIEWS

STATE OF NEW YORK
DEPARTMENT OF TRANSPORTATION

FILENAME	REGION	DATE	DRAWING NO.
380406GBJ1A	3	12/99	GB-3

DESIGN SUPERVISOR ____ JOB MANAGER ____ DESIGNED BY ____ DRAFTED BY ____ ESTIMATED BY ____ CHECKED BY ____ CHECKED BY ____

USER = gshubo

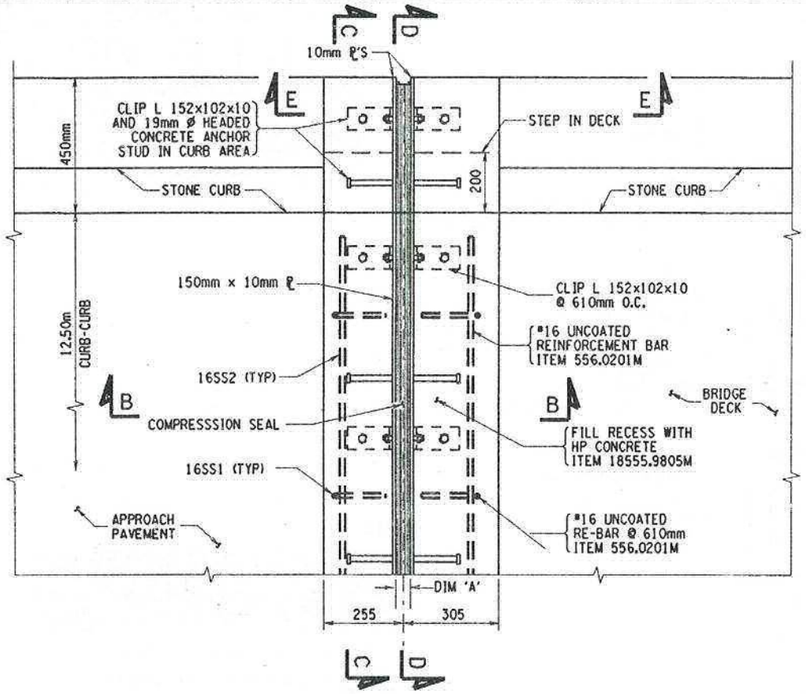

DIRECTION OF TRAFFIC

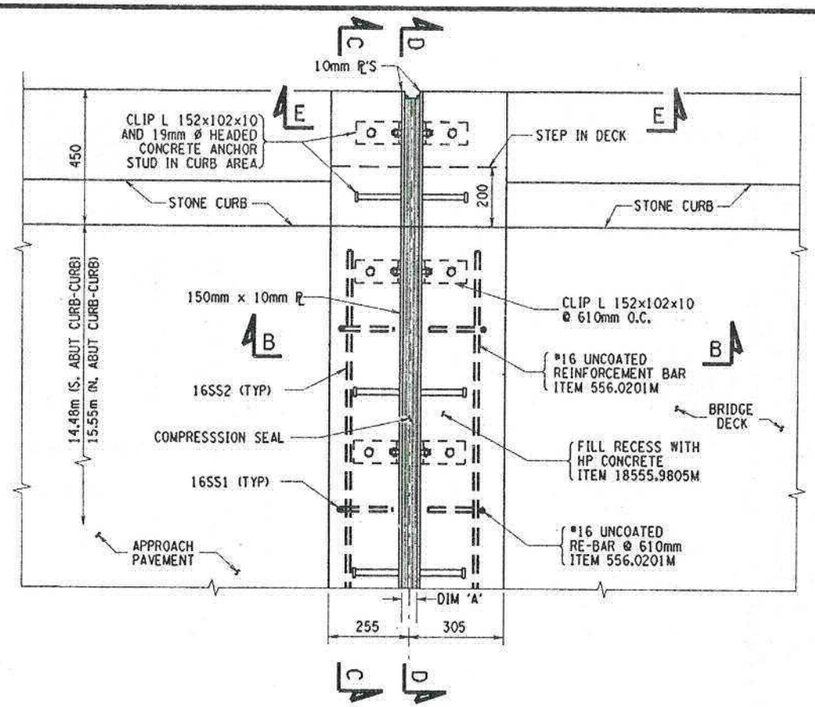

DIRECTION OF TRAFFIC

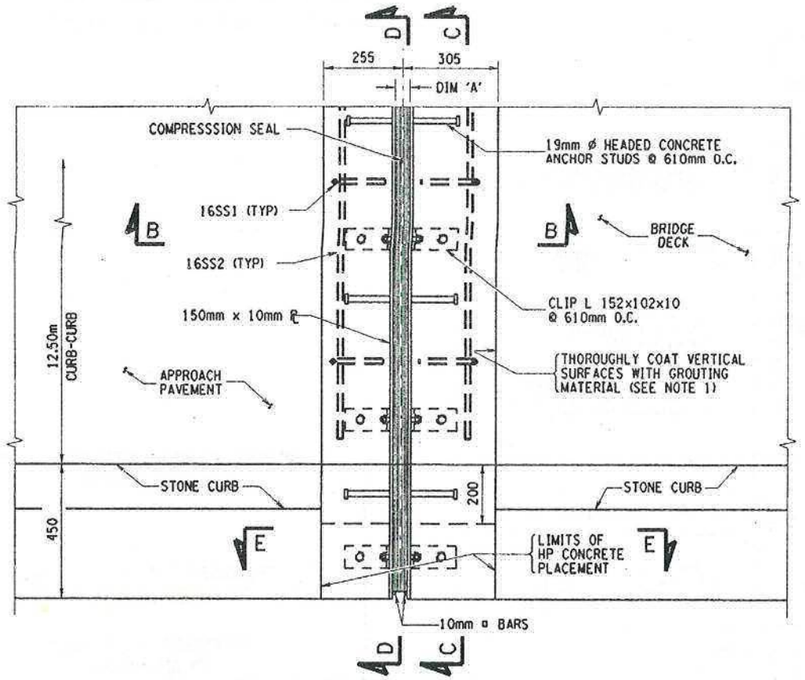

PROPOSED ABUTMENT JOINT PLAN VIEW
BIN 1093682 - BOTH ABUTS
S. ABUT SHOWN, N. ABUT OPPPOSITE
SCALE: 1 TO 10

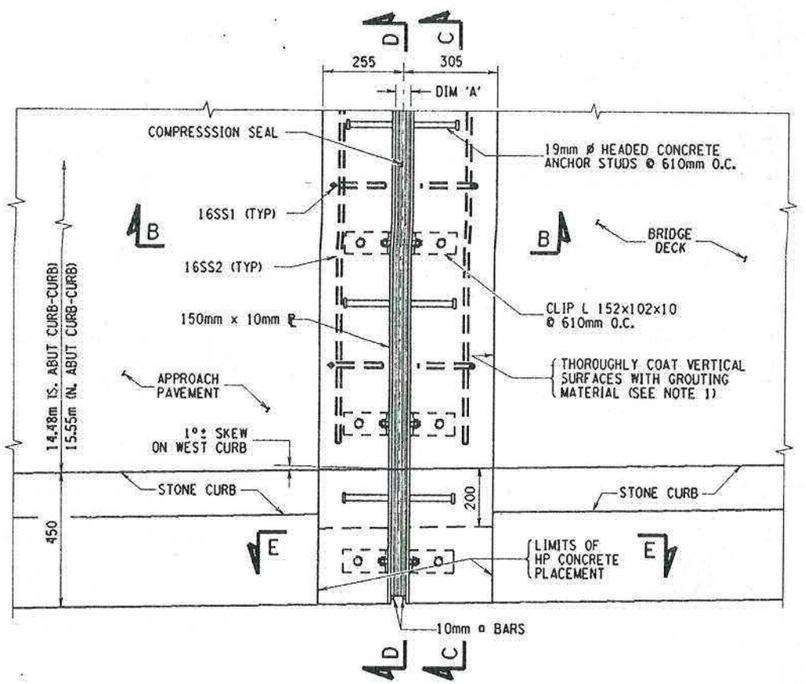

PROPOSED ABUTMENT JOINT PLAN VIEW
BIN 1093681 - BOTH ABUTS
S. ABUT SHOWN, N. ABUT OPPPOSITE
SCALE: 1 TO 10

FED ROAD REG. NO.	STATE	CONTRACT NO.	SHEET NO.	TOTAL SHEETS
1	N.Y.	D258367	114	354

INTERSTATE BRIDGE DECK OVERLAY PROJECT
VARIOUS BRIDGES ON I-690, I-81 AND I-481
ONONDAGA AND OSWEGO COUNTIES

P.I.N. 3804.06 | B.I.N. 1093681 & 2

NOTES:

1. THOROUGHLY COAT THE BOTTOM AND VERTICAL SURFACES OF THE RECESS WITH MATERIAL SPEC. 721-03. EPOXY POLYSULFIDE GROUT, OR MATERIAL SPEC. 705-22, PORTLAND CEMENT MORTAR BONDING GROUT. THE COST OF FURNISHING AND PLACING THE MATERIAL SHALL BE INCLUDED IN THE PRICE BID FOR ITEM 18555.9805M.
2. SECTION B-B IS LOCATED ON DWG. GB-5.
3. SECTIONS C-C, D-D AND E-E ARE LOCATED ON DWG. GB-6
4. FOR GENERAL MAC JOINT DETAILS. SEE DWG. JT-3.
5. FOR PROPOSED MAC JOINT SIZE AND ITEM NUMBER FOR EACH JOINT, SEE JOINT TABLE ON DWGS. JT- 1-2.
6. FOR DETAILS OF THE PIER JOINTS, SEE DWG. GB-3.

ALL DIMENSIONS ARE IN mm UNLESS OTHERWISE NOTED

AS BUILT REVISIONS

SIGNATURE _____ DATE _____

I-481 OVER I-90

PROPOSED ABUTMENT JOINT PLAN VIEWS

STATE OF NEW YORK
DEPARTMENT OF TRANSPORTATION

FILENAME	REGION	DATE	DRAWING NO.
380406GBJ1A	3	12/99	GB-4

DESIGN SUPERVISOR _____ JOB MANAGER _____ DESIGNED BY _____ CHECKED BY _____
ESTIMATED BY _____ DRAFTED BY _____ CHECKED BY _____

FED ROAD REG. NO.	STATE	CONTRACT NO.	SHEET NO.	TOTAL SHEETS
1	N.Y.	D258367	115	354

INTERSTATE BRIDGE DECK OVERLAY PROJECT

VARIOUS BRIDGES ON I-690, I-81 AND I-481

ONONDAGA AND OSWEGO COUNTIES

P.I.N. 3804.06 | B.I.N. 1093681 & 2

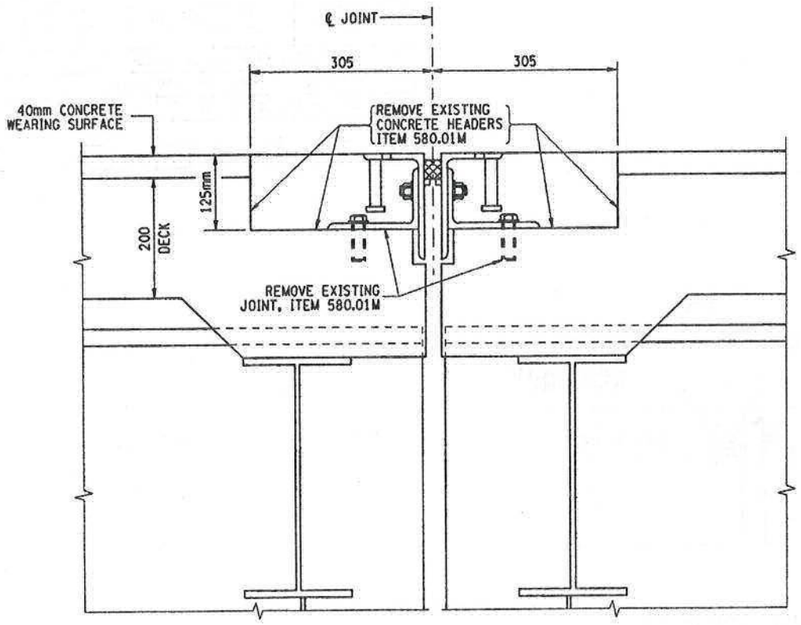

EXISTING SECTION A-A
BIN 1093681 - PIER 1
BIN 1093682 - PIER 2
SCALE: 1 TO 5

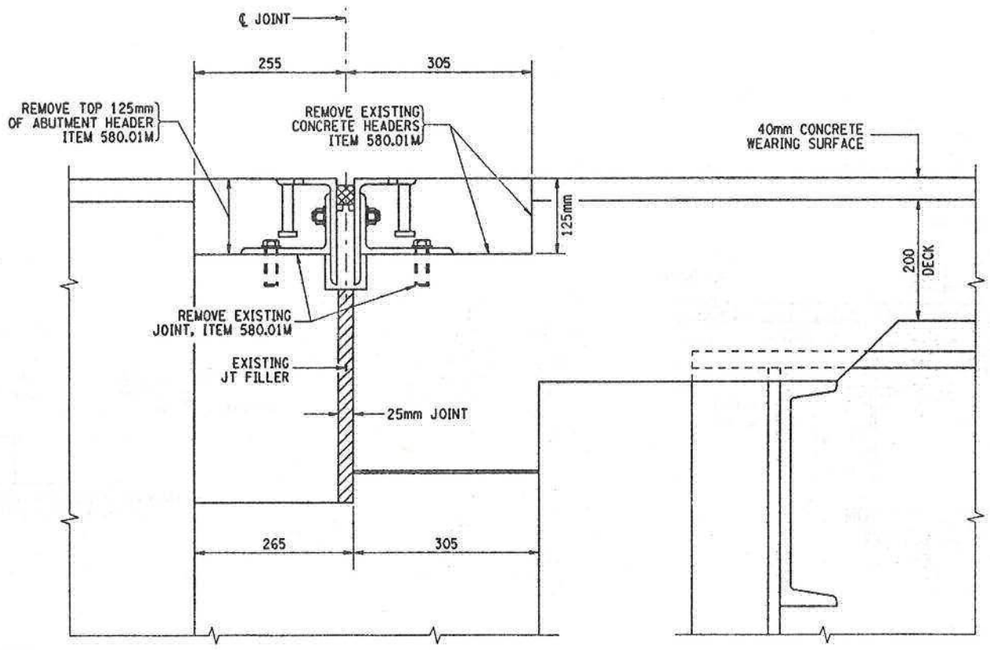

EXISTING SECTION B-B
BIN 1093681 - BOTH ABUTS
BIN 1093682 - BOTH ABUTS
SCALE: 1 TO 5

NOTES:

1. THOROUGHLY COAT THE BOTTOM AND VERTICAL SURFACES OF THE RECESS WITH MATERIAL SPEC. 721-03. EPOXY POLYSULFIDE GROUT, OR MATERIAL SPEC. 705-22, PORTLAND CEMENT MORTAR BONDING GROUT. THE COST OF FURNISHING AND PLACING THE MATERIAL SHALL BE INCLUDED IN THE PRICE BID FOR ITEM 18555.9805M.
2. SEE DWG. GB-4 FOR LOCATION OF SECTIONS A-A AND B-B.
3. FOR GENERAL MAC JOINT DETAILS SEE DWG. JT-3.
4. FOR PROPOSED MAC JOINT SIZE AND ITEM NUMBER FOR EACH JOINT, SEE JOINT TABLE ON DWGS. JT- 1-2.

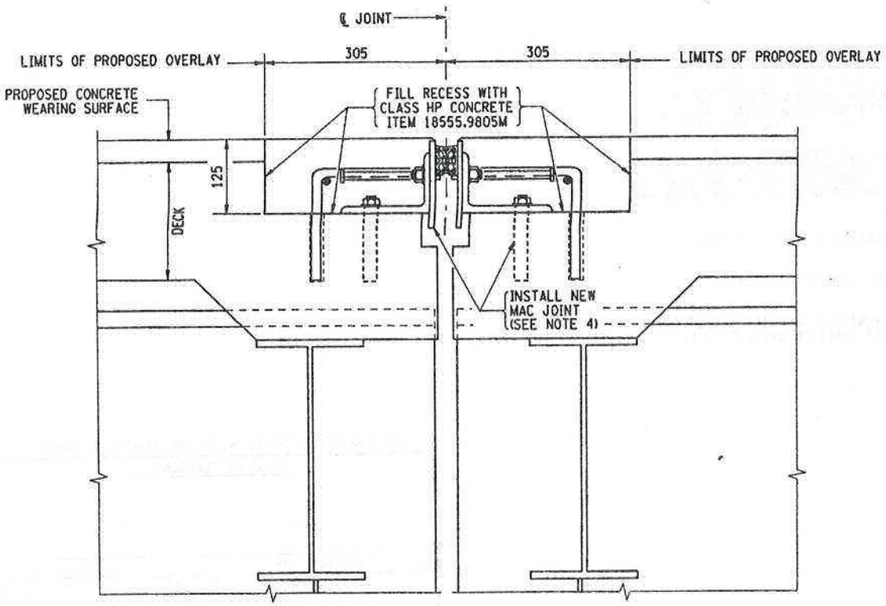

PROPOSED SECTION A-A
BIN 1093681 - PIER 1
BIN 1093682 - PIER 2
SCALE: 1 TO 5

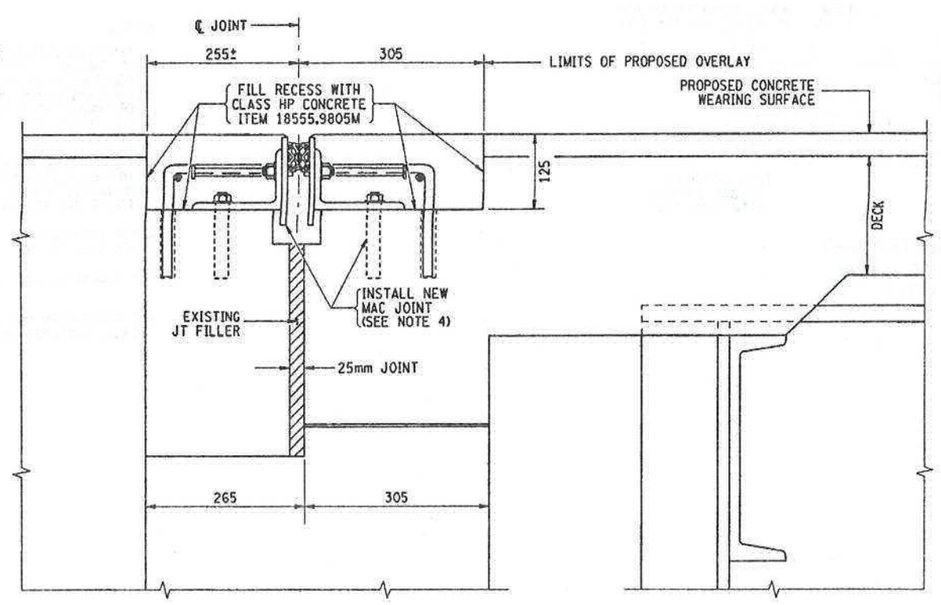

PROPOSED SECTION B-B
BIN 1093681 - BOTH ABUTS
BIN 1093682 - BOTH ABUTS
SCALE: 1 TO 5

ALL DIMENSIONS ARE IN mm UNLESS OTHERWISE NOTED

AS BUILT REVISIONS

SIGNATURE DATE

I-481 OVER I-90

EXISTING AND PROPOSED CROSS SECTIONS

STATE OF NEW YORK
DEPARTMENT OF TRANSPORTATION

FILENAME	REGION	DATE	DRAWING NO.
380406GBJ1A	3	1/00	GB-5

DESIGN SUPERVISOR ____ JOB MANAGER ____ DESIGNED BY ____ DRAFTED BY ____ ESTIMATED BY ____ CHECKED BY ____ CHECKED BY ____

USER = DGN&USERNAME

FED ROAD REG. NO.	STATE	CONTRACT NO.	SHEET NO.	TOTAL SHEETS
1	N.Y.	D258367	116	354

INTERSTATE BRIDGE DECK OVERLAY PROJECT

VARIOUS BRIDGES ON I-690, I-81 AND I-481

ONONDAGA AND OSWEGO COUNTIES

P.I.N. 3804.06 | B.I.N. 1093681 & 2

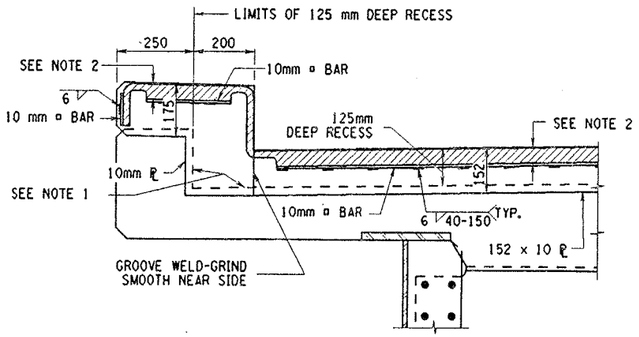

PROPOSED SECTION C-C

SCALE: 1 TO 10

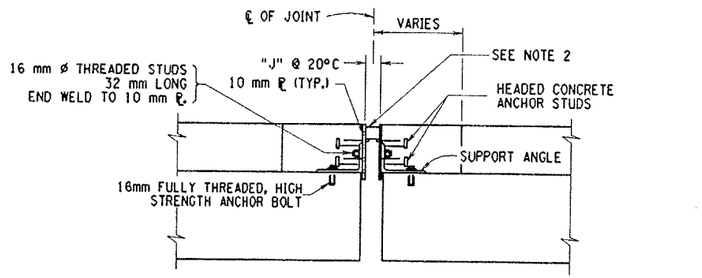

NOTE:
REINFORCEMENT NOT SHOWN

PROPOSED SECTION E-E

SCALE: 1 TO 10

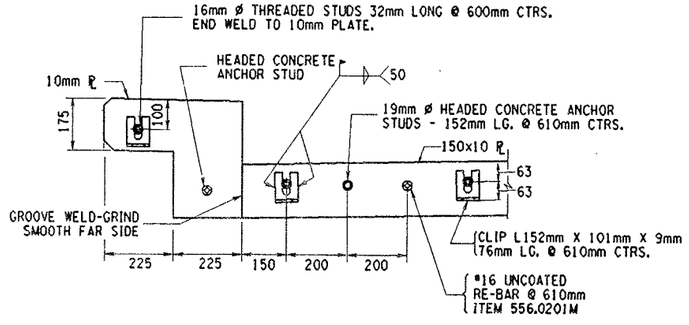

PROPOSED SECTION D-D

(ONLY THE STEEL SHOWN)

SCALE: 1 TO 10

NOTES:

1. THOROUGHLY COAT THE BOTTOM AND VERTICAL SURFACES OF THE RECESS WITH MATERIAL SPEC. 721-03, EPOXY POLYSULFIDE GROUT, OR MATERIAL SPEC. 705-22, PORTLAND CEMENT MORTAR BONDING GROUT. THE COST OF FURNISHING AND PLACING THE MATERIAL SHALL BE INCLUDED IN THE PRICE BID FOR ITEM 18555.9805M.

2. THIS DEPTH SHALL BE INDICATED ON THE SHOP DRAWINGS AND SHALL BE SUCH THAT WHEN THE SEAL IS COMPRESSED TO 50% OF ITS NORMAL WIDTH, THE TOP OF THE SEAL SHALL BE NOT LESS THAN 6mm NOR MORE THAN 19mm BELOW THE TOP OF THE ROADWAY.

3. FOR LOCATIONS OF SECTIONS C-C, D-D AND E-E, SEE DWG. GB-3,4.

4. FOR GENERAL MAC JOINT DETAILS, SEE DWG. JT-3.

5. FOR PROPOSED MAC JOINT SIZE AND ITEM NUMBER FOR EACH JOINT, SEE JOINT TABLE ON DWGS. JT- 1-2.

ALL DIMENSIONS ARE IN mm UNLESS OTHERWISE NOTED

AS BUILT REVISIONS

SIGNATURE _____ DATE _____

I-481 OVER I-90

PROPOSED JOINT DETAILS FASCIA SECTIONS

STATE OF NEW YORK
DEPARTMENT OF TRANSPORTATION

FILENAME	REGION	DATE	DRAWING NO.
380406GB.J1A	3	12/99	GB-6

DESIGN SUPERVISOR _____ JOB MANAGER _____ DESIGNED BY _____ ESTIMATED BY _____ DRAFTED BY _____ CHECKED BY _____

BIN: 1093681
I481 SB / I90

DECK DETERIORATION PLAN

NOT TO SCALE

N

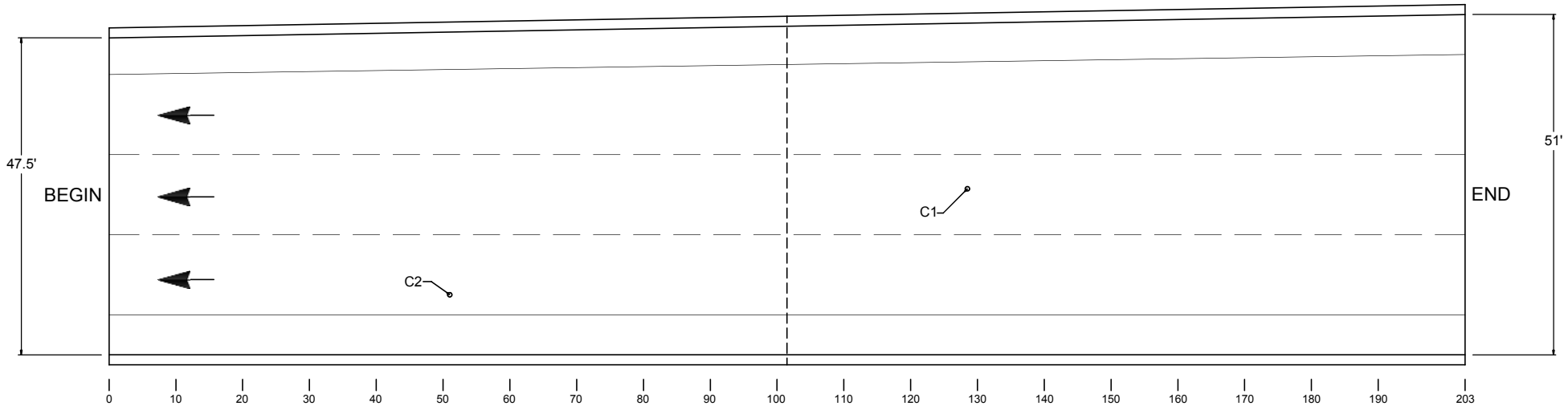

SPAN 1

SPAN 2

TOTAL DAMAGED AREA EQUALS 0.0 SF.

LEGEND

- Hollow Concrete
- Patch
- Coring location
- Crack

BIN: 1093681
I481 SB / I90

END ABUTMENT DETERIORATION SKETCH

NOT TO SCALE

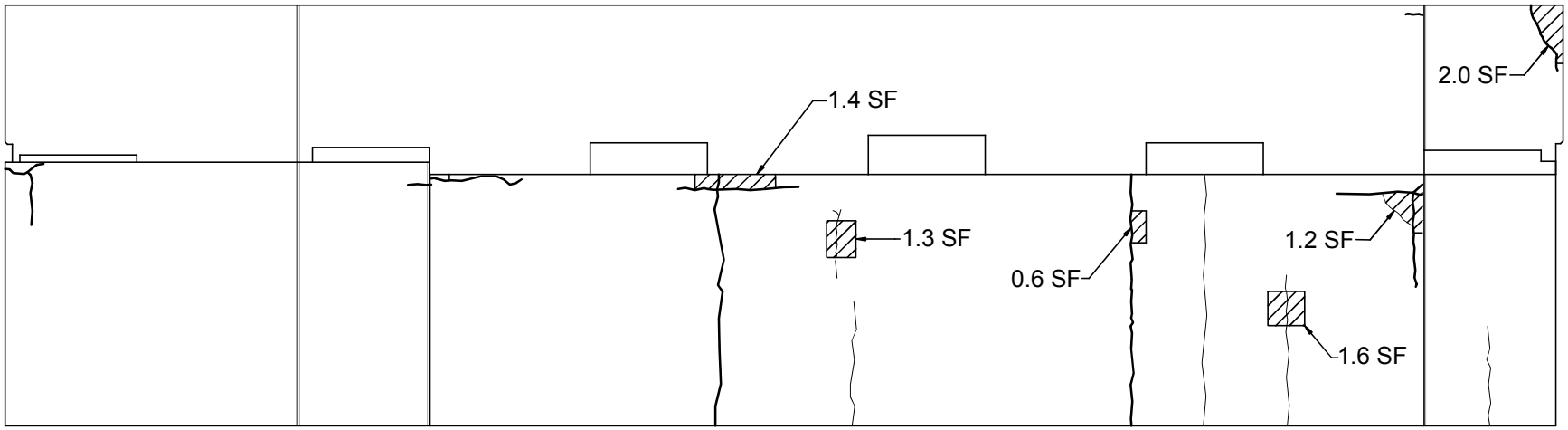

ELEVATION

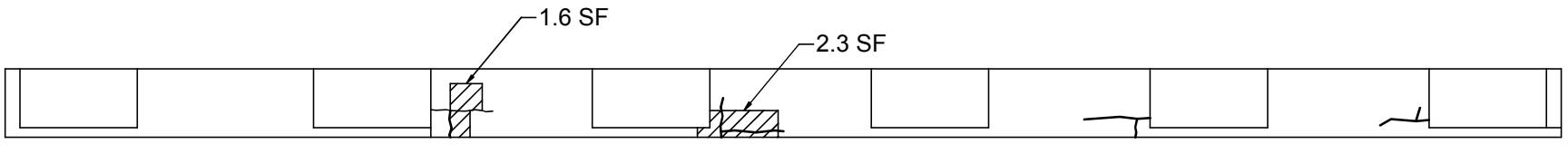

PLAN

LEGEND

- Hollow Concrete
- Spall
- Crack
- Hairline Crack

IN-DEPTH PHOTO DOCUMENTATION

BIN: 1093681
I481 SB / I90

IN-DEPTH INSPECTION
PHOTO LOCATION PLAN

N

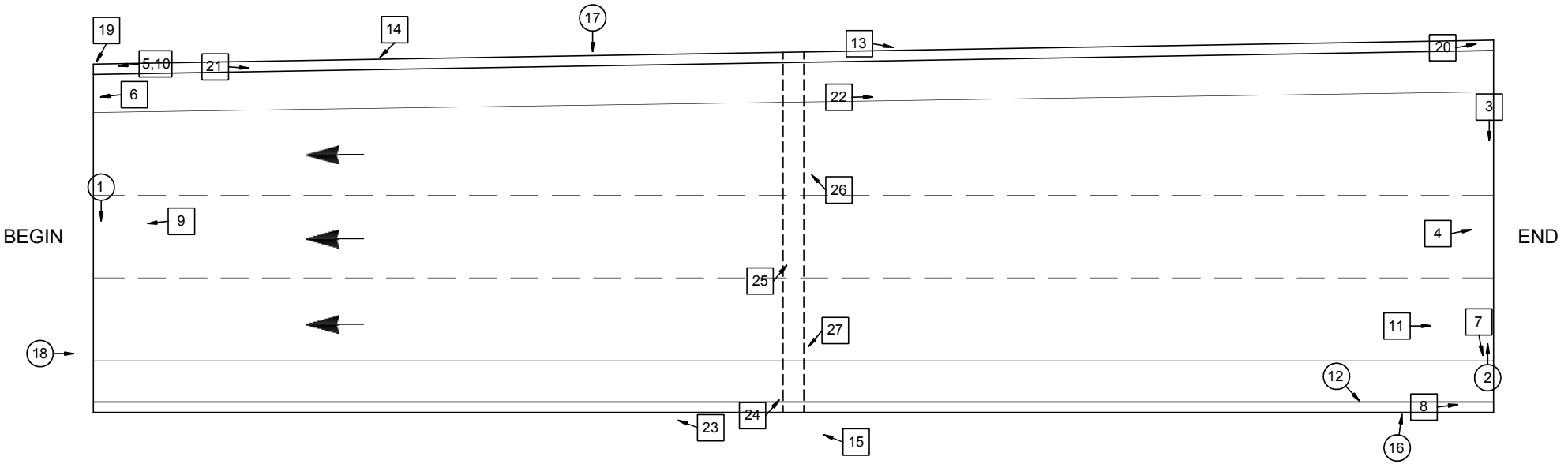

SPAN 1

SPAN 2

LEGEND

(XX) → Photo Above Deck

[XX] → Photo Below Deck

In-Depth Inspection Photos

I481 SB over I90, BIN 1093681



DESCRIPTION: BEGIN JOINT HEADER CENTER LANE (L-R)

PHOTO 1



DESCRIPTION: END JOINT (R-L)

PHOTO 2

In-Depth Inspection Photos

I481 SB over I90, BIN 1093681



DESCRIPTION: END BACKWALL TYP. (L-R)

PHOTO 3



DESCRIPTION: END SEAT AND STEM BAY 3

PHOTO 4



DESCRIPTION: BEGIN BACKWALL LEFT

PHOTO 5



DESCRIPTION: BEGIN BACKWALL BAY 1

PHOTO 6

In-Depth Inspection Photos

I481 SB over I90, BIN 1093681



DESCRIPTION: END BACKWALL BAY 5

PHOTO 7



DESCRIPTION: END BACKWALL RIGHT

PHOTO 8

In-Depth Inspection Photos

I481 SB over I90, BIN 1093681



DESCRIPTION: BEGIN STEM UNDER BAY 3

PHOTO 9



DESCRIPTION: BEGIN STEM AT LEFT

PHOTO 10



DESCRIPTION: END STEM UNDER PEDESTAL 5

PHOTO 11



DESCRIPTION: RIGHT SAFETY WALK SPAN 2 NEAR END

PHOTO 12



DESCRIPTION: SPAN 2 LEFT FASCIA (B-E)

PHOTO 13



DESCRIPTION: LEFT FASCIA SPAN 1 AT SNOW FENCE POST 4

PHOTO 14

In-Depth Inspection Photos

I481 SB over I90, BIN 1093681



DESCRIPTION: SPAN 1 RIGHT FASCIA (E-B)

PHOTO 15



DESCRIPTION: SPAN 2 RIGHT RAILING NEAR END

PHOTO 16



DESCRIPTION: SPAN 1 LEFT SNOW FENCE POST 8

PHOTO 17



DESCRIPTION: DECK FROM BEGIN RIGHT

PHOTO 18

In-Depth Inspection Photos

I481 SB over I90, BIN 1093681



DESCRIPTION: SPAN 1 DECK AT BEGIN LEFT

PHOTO 19



DESCRIPTION: SPAN 2 DECK AT END LEFT

PHOTO 20

In-Depth Inspection Photos

I481 SB over I90, BIN 1093681



DESCRIPTION: SPAN 1 LEFT OVERHANG (B-E)

PHOTO 21



DESCRIPTION: SPAN 2 BAY 1 (B-E)

PHOTO 22



DESCRIPTION: SPAN 1 FRAMING (E-B)

PHOTO 23



DESCRIPTION: PIER PEDESTAL 6

PHOTO 24

In-Depth Inspection Photos

I481 SB over I90, BIN 1093681



DESCRIPTION: PIER BEARING 4 RIGHT

PHOTO 25



DESCRIPTION: PIER BAY 2 END (R-L)

PHOTO 26

In-Depth Inspection Photos

I481 SB over I90, BIN 1093681



DESCRIPTION: PIER BAY 5 END (L-R)

PHOTO 27

DESCRIPTION:

PHOTO

ASBESTOS SAMPLING SURVEY

Asbestos Sampling Survey

Location:

BIN 1-09368-1
Interstate Route 481 South Bound over I-90

Prepared for:

New York State
Department of Transportation

PIN 3804.06.121

LaBella Project No. 97132

October 1999

Table of Contents

Page

I. Project Summary 1

II. Site Description 1

III. Inspection Procedures 1

IV. Results 2

Certification 2

Figures and Table

I. Project Summary

In accordance with conditions of Term Agreement D010010, LaBella Associates, P.C. conducted an asbestos sampling survey of the Interstate Route 481 South Bound bridge over I-90. Based on laboratory analyses of bulk samples collected, the following material was determined to contain asbestos:

BIN 1-09368-1 Interstate Route 481 South Bound over I-90

Type of Material	Estimated Amount
Sheet Packing	9.3 Square Meters

II. Site Description

The Site is located in Onondaga County, New York. For the purpose of this report, the Site consists of the Interstate Route 481 southbound bridge over I-90 (See attached FIGURE 1 - Site Location Map).

III. Inspection Procedures

The following procedures were used to obtain the data for this Report:

A. A review of record drawings supplied by Region 3 personnel and a visual inspection of the subject structure were conducted to identify potential visible/accessible sources of asbestos-containing materials. Observations and notes were made to provide a description of the structure, and an estimate of the approximate amount, length, or area of ACM present.

B. Physical or operational constraints, which might affect the removal of the ACM, were identified and reported.

C. Bulk samples of suspected ACM were collected during the site inspection of the subject structure. Samples were taken from each homogeneous area that may contain ACM.

D. Samples were submitted for analysis. Preliminary PLM analyses of NOB materials were performed by LaBella Laboratories, a NYSDOH approved laboratory, to determine the presence and percentage of asbestos in each sample. TEM analyses of NOB materials, if necessary, were performed by Environmental Monitoring Systems, Inc.

E. Lab results were used to determine the approximate location, type, and amount of the verified ACM.

F. A drawing of the structure at the Site was created, in order to show sample locations and the approximate locations and amounts of confirmed ACM observed in accessible locations.

Only accessible areas were inspected. Inaccessible areas, such as areas within the bridge or the approaches to the bridge were not included in this inspection. No investigation was conducted by LaBella Associates to determine the presence of underground utilities on or in the immediate vicinity of the Site. Actual sample locations are shown in the attached FIGURE 2. Results of bulk sample analyses are tabulated in the attached TABLE.

IV. Results

BIN 1-09368-1 Interstate Route 481 South Bound over I-90

Sheet Packing

Asbestos-containing sheet packing is located between the tops of the abutments and the deck slab at both ends of the bridge. Most of this material is presently covered by the bridge deck, although the edges of this sheet packing are exposed and visible at various locations.

It is estimated that the total amount of this asbestos-containing sheet packing material on the bridge is approximately 9.3 square meters. This estimate is based on field measurements taken at the time of the site visit.

The approximate locations of this asbestos-containing sheet packing are shown in FIGURE 2.

Certification

LaBella Associates, P.C. certifies the accuracy of this report, to the best of our knowledge, based on the information collected as described in the Inspection Procedures Section of this investigation.

Figures & Table

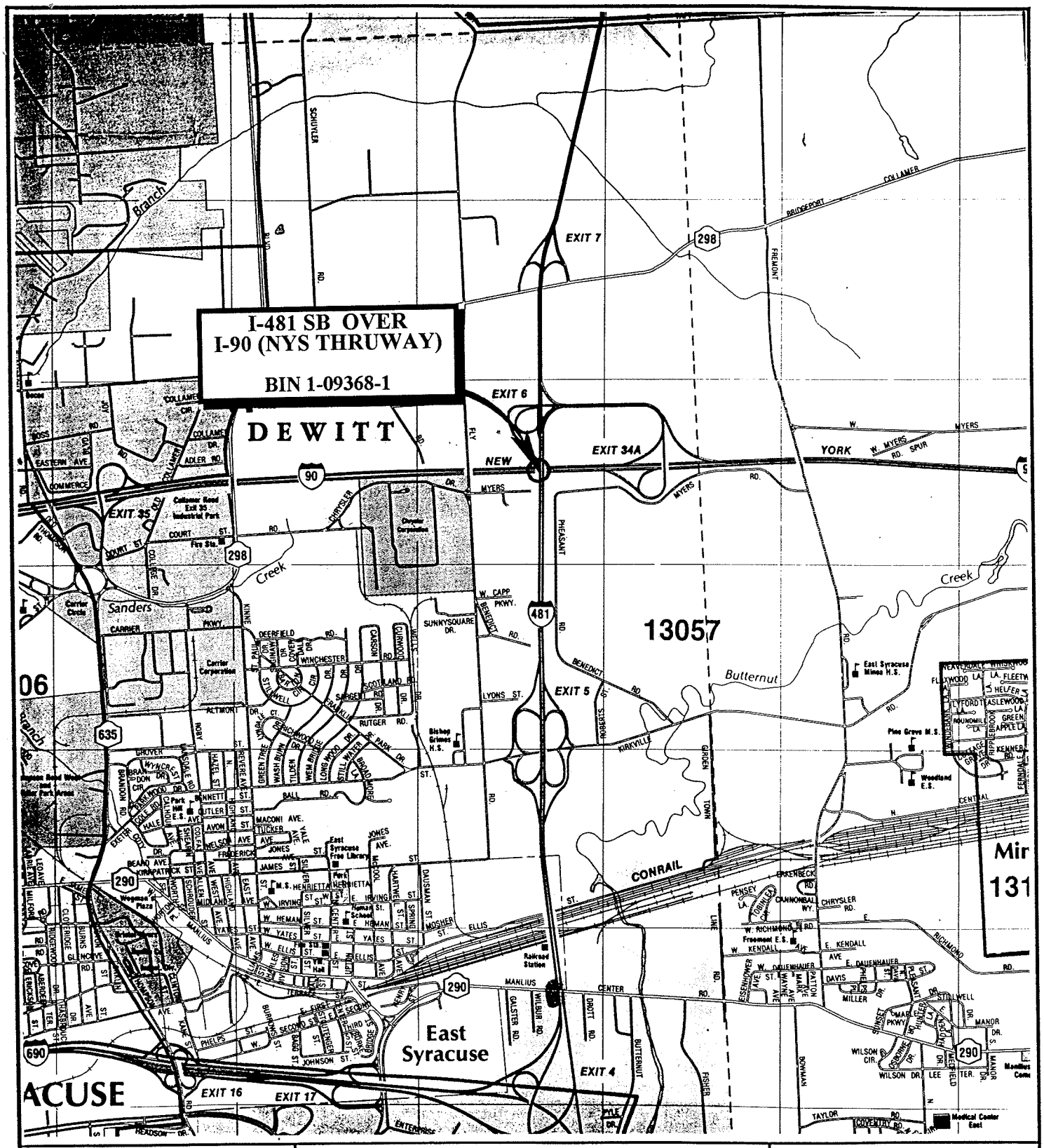

N

SCALE: 1" = 2000'

FIGURE 1
Site Location Map

I-481South Bound over I-90 (NYS Thruway)

Onondaga County, New York

LABELLA

PROJECT NO. 97132

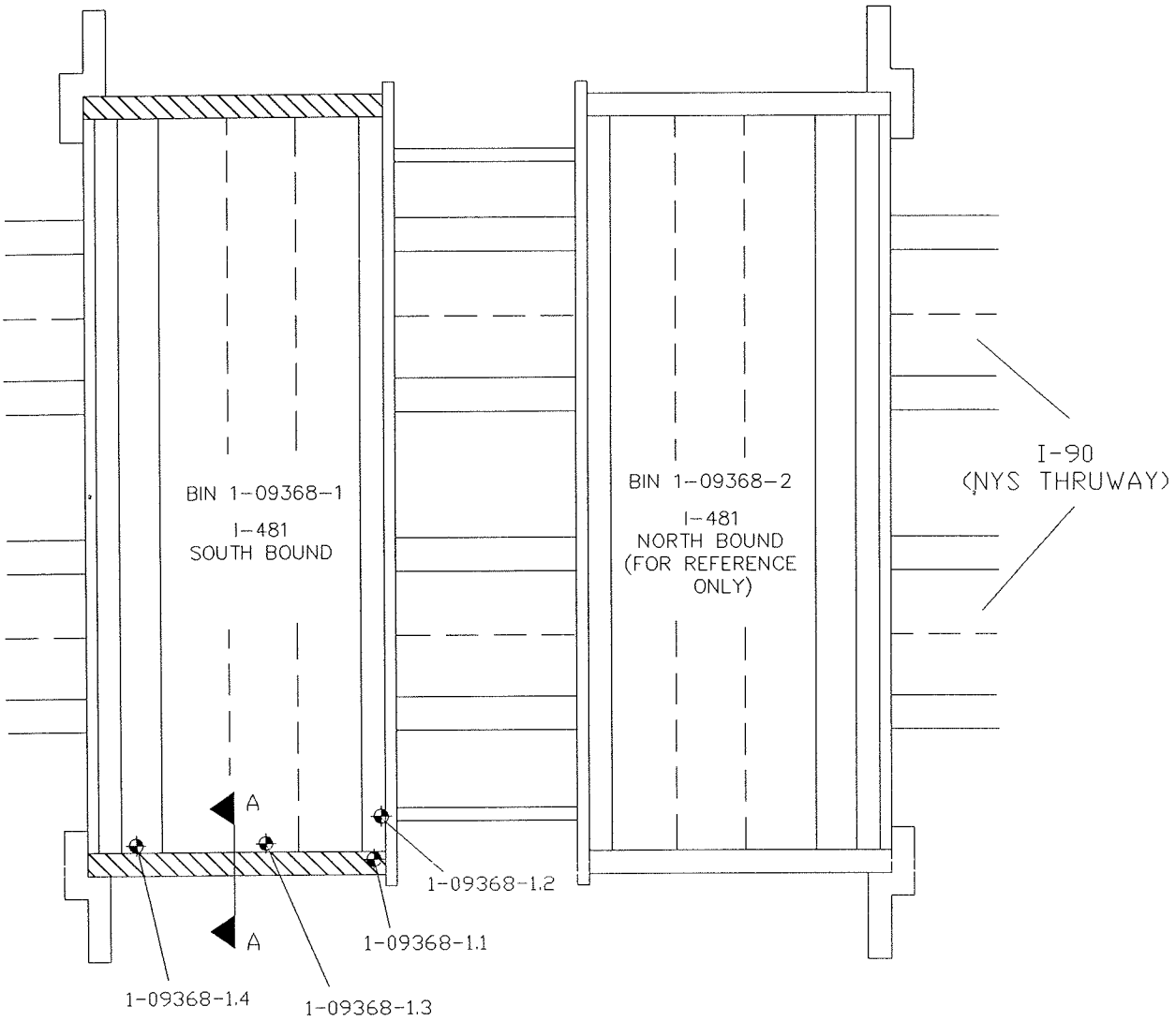

SECTION A-A (TYP.)

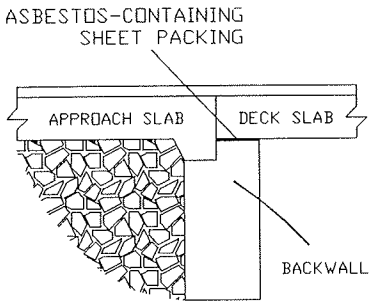

LEGEND

1-09368-1.1 SAMPLE LOCATION

ASBESTOS-CONTAINING SHEET PACKING BTWN. DECK & TOP OF BACK-WALL (SEE SECTION A-A)

NORTH

PROJECT TITLE: ASBESTOS SAMPLING SURVEY
11 BRIDGES, ONONDAGA &
OSWEGO COUNTIES, NEW YORK

PROJECT NO. 97132

PIN 3804.06.121

FIGURE 2 : I-481 SOUTH BOUND
OVER I-90 (NYS THRUWAY)
BIN 1-09368-1
SAMPLE LOCATIONS AND CONFIRMED ACM

NOT TO SCALE

DATE: OCTOBER, 1999

Bulk Sample Results Table

Asbestos Sampling Survey
BIN 1-09368-1
Interstate Route 481 South Bound over I-90
Onondaga County, New York
LaBella Project # 97132
PIN 3804.06.121

Sample #	Sample Location	Type of Material	Results % Asbestos	Amount of Material	Specification Item No.
1093681-01	**South East Corner Between Deck & Abutment**	**Sheet Packing**	**33% Chrysotile**	**9.3 Square Meters**	**15202.0620 (M)**
1093681-02	South East Corner Inside Fascia Beam	Green Paint	None Detected	N/A	N/A
1093681-03	South End of Bridge Beneath Bearing	Bearing Pad	None Detected	N/A	N/A
1093681-04	South Face of Abutment	Gray Masonry Coating	None Detected	N/A	N/A

LATEST BIENNIAL INSPECTION REPORT

Inspection Date: 10/18/2012 RC: 33 BIN: 1093681

Bridge Ratings

Carried: 481I 481I33012088 Crossed: 90I X CheckValue: 1,810,841,504

Inspection Agency: 10 - NYSDOT Type of Inspection: 1 - BIENNIAL
GTMS: 302 -- Steel - Stringer/Multi-Beam or Girder
POSTINGS: See Gen Rec Page 1 for Postings at time of inspection.
Further Investigation Needed: No
State Highway Number: 70-7 Milepoint: 10.18 AADT/Yr: 13959 / 2002
Orientation: 1 - North Political Unit: 0233 - Town of DEWITT Year Built: 1972
Total Spans: 2 Ramp Bridge Attached To Span: NA BIN: NA
General Recommendation: 5 Computed Condition Rating: 4.625

Abutment Ratings:	Beg Abut	End Abut
Joint with Deck	5	5
Bearings, Bolts, Pads	6	6
Seats and Pedestals	6	6
Backwall	4	4
Stem (Breastwall)	5	4
Erosion or Scour	5	5
Footings	9	9
Piles	8	8
Recommendation	5	5

Wingwall Ratings:	Beg Abut	End Abut
Walls	4	4
Footings	9	9
Erosion or Scour	6	6
Piles	8	8

Channel Ratings:	Channel
Stream Alignment	8
Erosion and Scour	8
Waterway Opening	8
Bank Protection	8

Approach Ratings:	Approaches
Drainage	5
Embankment	5
Settlement	5
Erosion	5
Pavement	5
Guide Railing	6

Number of Flags Issued:

RED: 0 Yellow: 0 Safety: 0

Vulnerability Reviews Recommended: 1=Yes, 2=No, 3=NA, X=NotActive

Hydraulic: 3	Overload: X	Steel: 2
Collision: 2	Concrete: X	Seismic: X

Inspector's Signature: CheckValue: 1,810,841,504 Date: 10/18/2012

Bruce Opalka,PE () (Inspector ID:3000038)

Signed copy of this inspection report is available in the appropriate NYSDOT Regional Office

Reviewed By: Date: 11/26/2012

James R. Manning,PE () (QC ID:3000023)

Signed copy of this inspection report is available in the appropriate NYSDOT Regional Office

Inspection Date: 10/18/2012 RC: 33 BIN: 1093681

Span Ratings

Carried: 481I 481I33012088 Crossed: 90I X CheckValue: 1,810,841,504

Deck Element Ratings:	001	002
Wearing Surface	6	6
Curbs	6	6
Sidewalks, Fascias	5	5
Railings, Parapets	6	6
Scuppers	8	8
Gratings	8	8
Median	8	8
Mono Deck Surface	6	6

Superstructure Ratings:	001	002
Structural Deck	5	5
Primary Members	5	5
Secondary Members	5	5
Paint	2	2
Joints	6	8
Recommendation	5	5

Pier Ratings:	001	002
Bearings, Bolts, Pads	4	8
Pedestals	5	8
Top of Cap or Beam	6	8
Stem Solid Pier	8	8
Cap Beam	4	8
Pier Columns	5	8
Footings	9	8
Erosion or Scour	6	8
Piles	8	8
Recommendation	5	8

Utility Ratings:	001	002
Lighting	8	8
Sign Structure	6	8
Utilities and Support	8	8

Field Notes:

Field Date	Arrival	Departure	Temp (C)	Temp (F)	Weather Conditions
10/16/2012	3:00:00 PM	5:00:00 PM	10	50	P.C.
10/18/2012	9:00:00 AM	11:00:00 AM	16	60	Sunny

Inspection Date: 10/18/2012 RC: 33 BIN: 1093681

Inspection Notes

Carried: 481I 481I33012088 Crossed: 90I X CheckValue: 1,810,841,504

Note ID: 321210936810000

Beg Abut -- Abutment: Backwall -- Rated 4, Was 4
Beg Abut -- Wingwalls: Walls -- Rated 4, Was 4
End Abut -- Abutment: Backwall -- Rated 4, Was 4
End Abut -- Wingwalls: Walls -- Rated 4, Was 4
Referenced Photos: "3", "1", "8", "6"
2012 - At both stems the top corners of the backwall and adjacent portion of the wingwalls are cracked to mid height of backwall.

Note ID: 321210936810002

Approaches: Pavement -- Rated 5, Was 5
Referenced Photos: "5"
2012: Minor cracking along bridge joints allows for '5' rating at this time.

Note ID: 321210936810003

Span 001 -- Deck Elements: Curbs -- Rated 6, Was 4
Span 002 -- Deck Elements: Curbs -- Rated 6, Was 4
Referenced Photos: "4"
2012: Minor debris allows '6' rating of curbs.

Note ID: 321210936810004

Span 001 -- Superstructure: Paint -- Rated 2, Was 2
Span 002 -- Superstructure: Paint -- Rated 2, Was 2
Referenced Photos: "2"
2012 - The paint system has extensively failed along lower flanges and has failed along the lower 3/4's of the webs, with the remaining paint appearing chalky. Paint system has 40% to 50% loss. The steel primary members are now starting to have rust flakes with section loss approx. less than 5%. This being downrated to a 2 for both spans. Strongly recommend that this structure be painted.

Note ID: 321210936810005

Span 001 -- Pier: Bearings, Bolts, Pads -- Rated 4, Was 5
Referenced Photos: "11"
2012 - The fixed bearings at the pier were not replaced with the begin and end bearing project. They are severely corroded at this time. A single bolt is sheared; bearing #4, span #1, right side.

Note ID: 321210936810006

Span 001 -- Pier: Pedestals -- Rated 5, Was 5
Referenced Photos: "9"
2012: Minor cracking in right fascia pedestal.

Inspection Date: 10/18/2012 RC: 33 BIN: 1093681

Inspection Notes

Carried: 481I 481I33012088 Crossed: 90I X CheckValue: 1,810,841,504

Note ID: 321210936810007

Span 001 -- Pier: Cap Beam -- Rated 4, Was 4
Referenced Photos: "10"
2012 - The top corners on the begin and end sides of capbeam in bays 2 and 5 are horizontally cracked and hollow sounding.

Note ID: 321210936810001

End Abut -- Abutment: Stem (Breastwall) -- Rated 4, Was 4
Referenced Photos: "7"
2012 - The top corners of the seat/stem are cracked horizontally and hollow sounding up to 8" down and back from the corner across the seat. These areas are next to peds 2, 3, and 6. Other areas of the stem have a few hairline cracks.

Inspection Date: 10/18/2012 RC: 33 BIN: 1093681

Inspection Photos in Photo Number Order

Carried: 481I 481I33012088 Crossed: 90I X CheckValue: 1,810,841,504

Beginning abutment right wingwall.
Viewed from span #1 beginning right corner.



Photo Number: 1 Photo Fil).jp

Span #1 paint condition, typical of both spans.
Viewed from span #1 beginning center.



Photo Number: 2 Photo Filename: IMG_0422 (Small).jp

Inspection Date: 10/18/2012 RC: 33 BIN: 1093681

Inspection Photos in Photo Number Order

Carried: 481I 481I33012088 Crossed: 90I X CheckValue: 1,810,841,504

Beginning abutment left corner of backwall and wingwall.
Viewed from span #1 beginning left corner.



Photo Number: 3 Photo Filename: IMG_0423 (Small).jp

Left curb line.
Viewed from beginning left quad.



Photo Number: 4 Photo Filename: IMG_0424 (Small).jp

Inspection Date: 10/18/2012 RC: 33 BIN: 1093681

Inspection Photos in Photo Number Order

Carried: 481I 481I33012088 Crossed: 90I X CheckValue: 1,810,841,504

Beginning approach pavement.
Viewed from beginning left looking right.



Photo Number: 5 Photo Filename: IMG_0425 (Small).jp

End abutment left wingwall.
Viewed from span #2 end left corner.



Photo Number: 6 Photo Filename: IMG_0426 (Small).jp

Inspection Date: 10/18/2012 RC: 33 BIN: 1093681

Inspection Photos in Photo Number Order

Carried: 481I 481I33012088 Crossed: 90I X CheckValue: 1,810,841,504

End abutment stem, shows crack along seat between pedestal 2 and 3.
Viewed from span #2 end center looking left.



Photo Number: 7 Photo Filename: IMG_0427 (Small).jp

End abutment right corner of backwall and wingwall.
Viewed from span #2 end right corner.



Photo Number: 8 Photo Filename: IMG_0428 (Small).jp

Inspection Date: 10/18/2012 RC: 33 BIN: 1093681

Inspection Photos in Photo Number Order

Carried: 481I 481I33012088 Crossed: 90I X CheckValue: 1,810,841,504

Pier right fascia pedestal cracked.
Viewed from span #2 beginning right.



Photo Number: 9 Photo Filename: IMG_0473 (Small).jp

Pier cap beam, shows crack along top between pedestals 5 and 6.
Viewed from span #2 beginning right.



Photo Number: 10 Photo Filename: IMG_0474 (Small).j

Inspection Date: 10/18/2012 RC: 33 BIN: 1093681

Inspection Photos in Photo Number Order

Carried: 481I 481I33012088 Crossed: 90I X CheckValue: 1,810,841,504

Pier bearing #4, missing anchor bolt on span #1 side right.

Viewed from span #2 beginning right.



Photo Number: 11 Photo Filename: IMG_0475 (Small).j

No Photo

Inspection Date: 10/18/2012 RC: 33 BIN: 1093681

Inspection Sketches in Sketch SysID Order

Carried: 481I 481I33012088 Crossed: 90I X CheckValue: 1,810,841,504

Sketch ID: 321210936810000 Sketch Filename: LdRatNC.12

General Sketch for Bridge
Referenced Photos:

Region 3 LoadRatingFieldCheckForm

NYSDOT BRIDGE INSPECTION REPORT			
SHEET	1	OF	1

LOAD RATING FIELD CHECK FORM

BIN:	1093681	Insp. Date:	10/16/2012

Dead Load - Note Changes since Last load Rating or state "NONE":

NONE

Section Loss -Note Changes since Last load Rating or state "NONE":

NONE

Additional Notes:

NONE

Attachments:

Team Leader: BRUCE OPALKA

Inspection Date: 10/18/2012 RC: 33 BIN: 1093681

Gen. Rec., Postings, Federal Ratings, etc.

Carried: 481I 481I33012088 Crossed: 90I X CheckValue: 1,810,841,504

Overall Condition:

GENERAL RECOMMENDATION: 5

Computed Condition Rating: 4.625

Problems Requiring Action:

NO Further Investigation Needed

NO Flags Issued

POSTINGS:

Inspector Confirmed existing Posting data as correct.
Posted Vertical Clearance ON the bridge is: No Posting
Posted Vertical Clearance UNDER the bridge is: No Posting
No Load Restriction is posted on this bridge

Overloads Observed:

NO Overload Vehicles were observed on this bridge

FEDERAL RATINGS:

NBI Deck Condition: 6
NBI Superstruct Condition: 6
NBI Substruct Condition: 5
NBI Channel Condition: N
NBI Culvert Condition: N

Diving Inspection Needs:

Diving Inspection Required? No Date of Last Diving Inspection: No Date

Inventory Problems:

Inventory Problems Exist? No

Miscellaneous:

Time Required to Inspect Bridge: 4 Hours

Lane Closure Needs: None Required

No Railroad Flagging Required

No Pedestrian Fence

There is a Snow Fence present

The BIN Plate is in OK condition

Inspection Date: 10/18/2012 RC: 33 BIN: 1093681

Gen. Rec., Postings, Federal Ratings, etc.

Carried: 481I 481I33012088 Crossed: 90I X CheckValue: 1,810,841,504

Special Emphasis Inspection Required:

Non-Redundant/Fracture Critical Members - No
Pin and Hangers - No
Fatigue-Prone Welds - No
Non-Categorized Fatigue-Prone Details - No
Other (Specified in Text) - No

Special Emphasis Details:

No Special Emphasis Inspection Required.

General Notes To the Next Inspector:

There is a high mast camara pole at the begin left that needs to be inspected and signed in the bin folder.

10/18/2012 Bucket truck without lane closure used.

Improvements Observed:

Inspection Date: 10/18/2012 RC: 33 BIN: 1093681

Review Progress and Personnel Present at Inspection

Carried: 481I 481I33012088 Crossed: 90I X CheckValue: 1,810,841,504

Inspection Submission Status:

Submitted to QC Engineer on: 10/19/2012
QC Submission Number: 253219

QC Review Completed: 11/26/2012
QC Engineer: James R. Manning

Submitted to Liaison Engineer on: 11/30/2012
Liaison Submission Number: 53239

Liaison Review Completed: 12/12/2012
Liaison Engineer: TODD M. HERMANN

Submitted for BIIS Processing on: 12/12/2012
BIIS Submission Number: .kp1

Current Status: Keypunched, Sent to BIIS
Check Value: 1,810,841,504

Personnel Present During Inspection:

Bruce Opalka - Team Leader
Keith Way - Assistant Team Leader

Inspection Date: 10/18/2012 RC: 33 BIN: 1093681

Inspection Access Requirements

Carried: 481I 481I33012088 Crossed: 90I X CheckValue: 1,810,841,504

Equipment Required for Inspection

No Access Requirement Changes Noted During This Inspection.
This Listing is from the Inventory Database.

ACCESS CATEGORIES FOR ENTIRE BRIDGE
Required: Walking, Extension Ladder, Small Lift, Shadow Vehicle

ACCESS CATEGORIES FOR SPAN 1
Required: Walking, Extension Ladder, Small Lift, Shadow Vehicle

ACCESS CATEGORIES FOR SPAN 2
Required: Walking, Extension Ladder, Small Lift, Shadow Vehicle

Inspection Date: 10/18/2012 RC: 33 BIN: 1093681

Culvert Measurements

Carried: 481I 481I33012088 Crossed: 90I X CheckValue: 1,810,841,504

Culvert Measurements

NO CULVERT DATA FOR BIN 1093681

Standard Photos **RC: 33 BIN: 1093681**

Carried: 481I 481I33012088 Crossed: 90I X

1093681_LOCATION_MAP.JPG

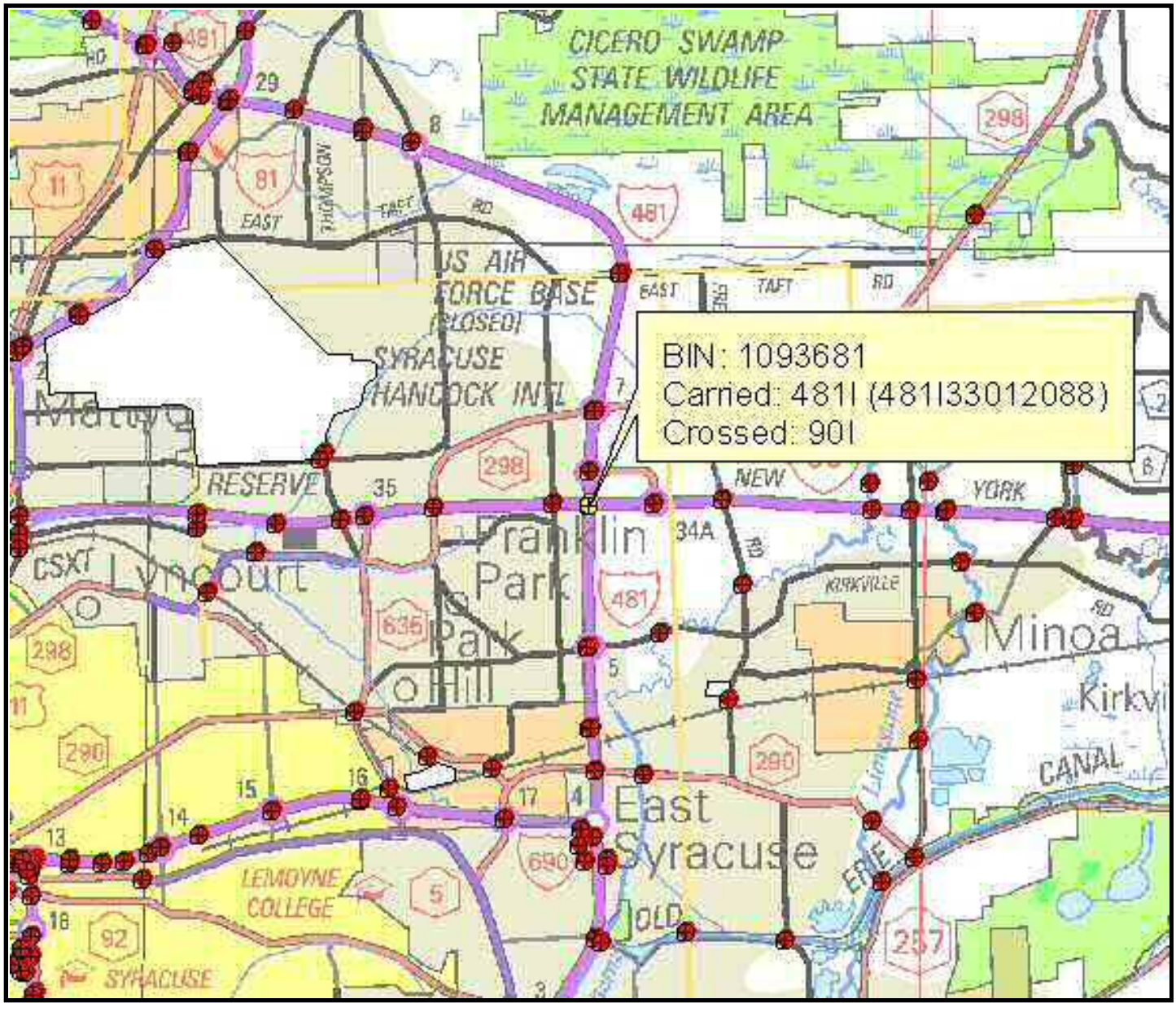

Standard Photos **RC: 33 BIN: 1093681**

Carried: 481I 481I33012088 Crossed: 90I X

Abutment Begin.12.jpg

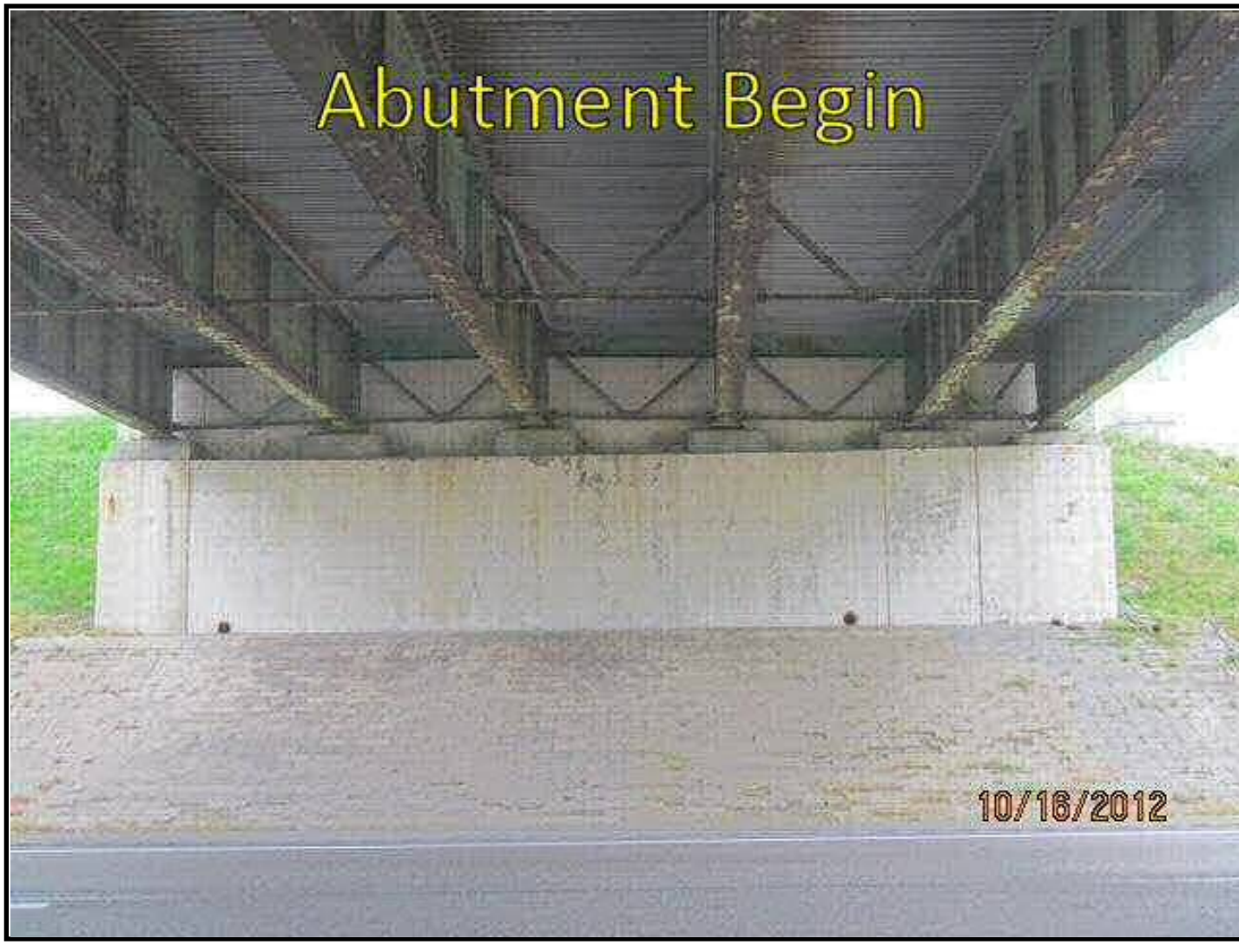

Abutment End.12.jpg

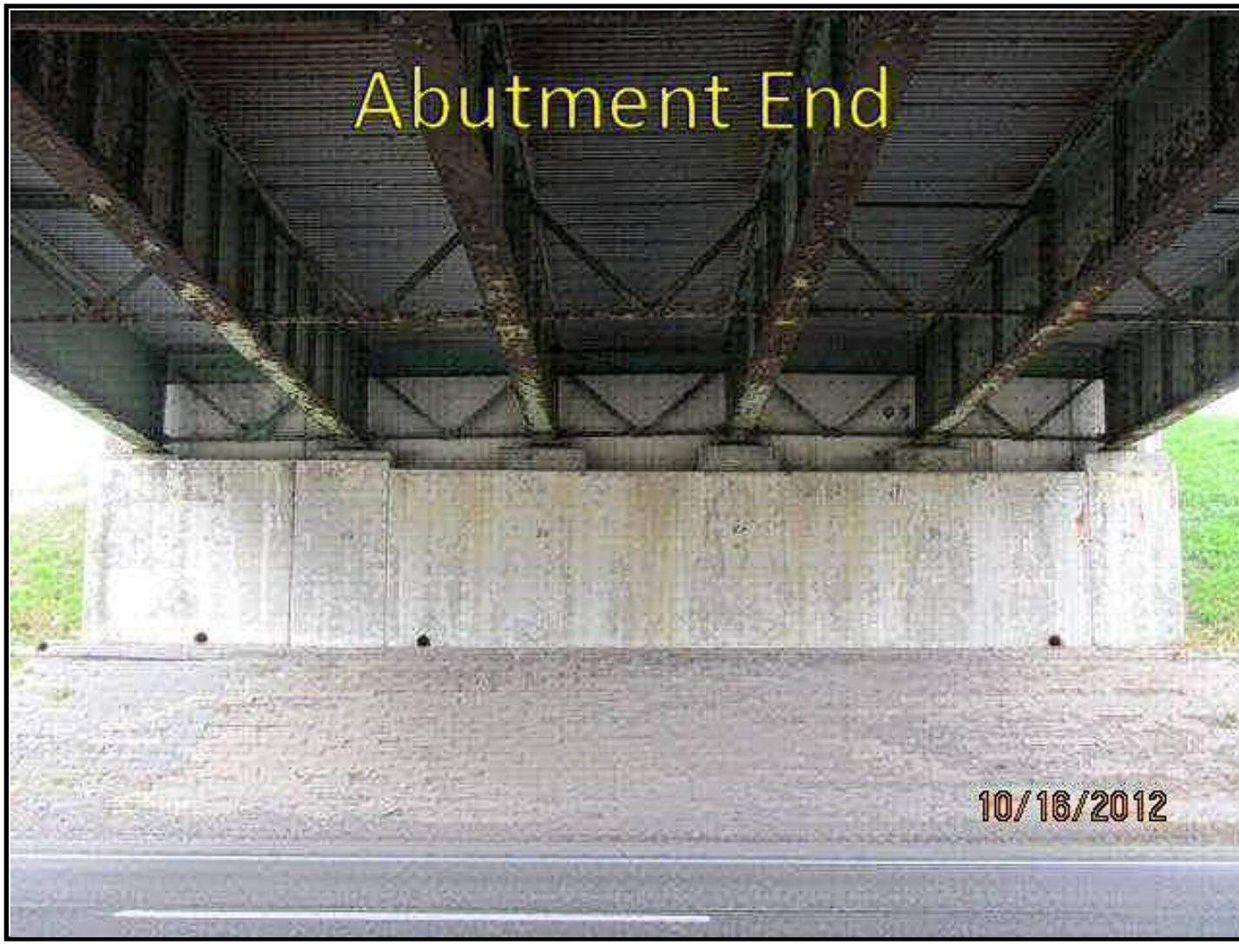

Standard Photos **RC: 33 BIN: 1093681**

Carried: 481I 481I33012088 Crossed: 90I X

Approach Begin.12.jpg



Standard Photos **RC: 33 BIN: 1093681**

Carried: 481I 481I33012088 Crossed: 90I X

Approach End.12.jpg



Standard Photos **RC: 33 BIN: 1093681**

Carried: 481I 481I33012088 Crossed: 90I X

Elevation Left.12.jpg



Standard Photos **RC: 33 BIN: 1093681**

Carried: 481I 481I33012088 Crossed: 90I X

Feature Crossed Left.Sp1.12 .jpg



Standard Photos **RC: 33 BIN: 1093681**

Carried: 481I 481I33012088 Crossed: 90I X

Feature Crossed Left.Sp2.12 .jpg



Standard Photos **RC: 33 BIN: 1093681**

Carried: 481I 481I33012088 Crossed: 90I X

Feature Crossed Right.Sp1.12.jpg



Standard Photos **RC: 33 BIN: 1093681**

Carried: 481I 481I33012088 Crossed: 90I X

Feature Crossed Right.Sp2.12.jpg



Framing View.12.jpg

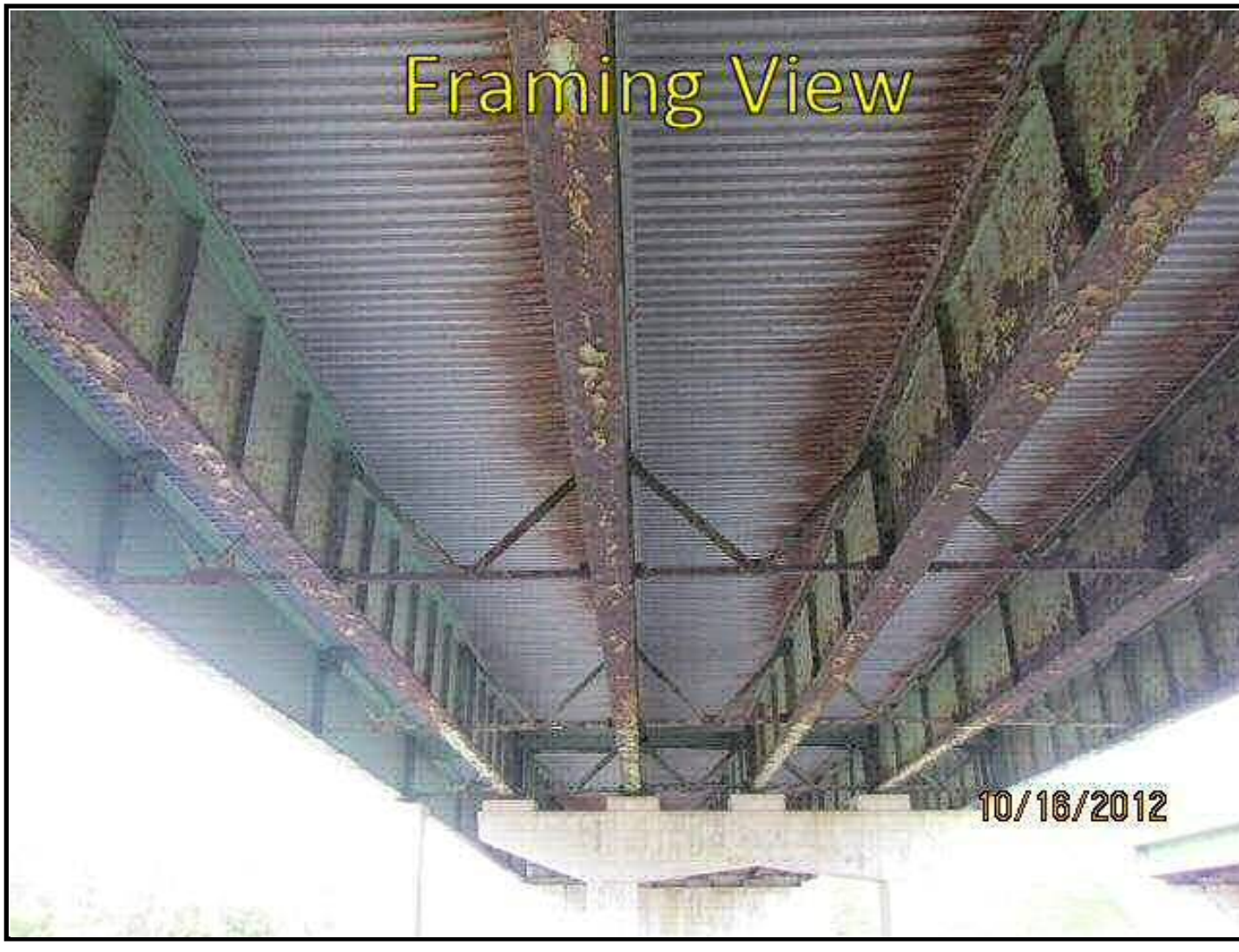

Pier.12.jpg

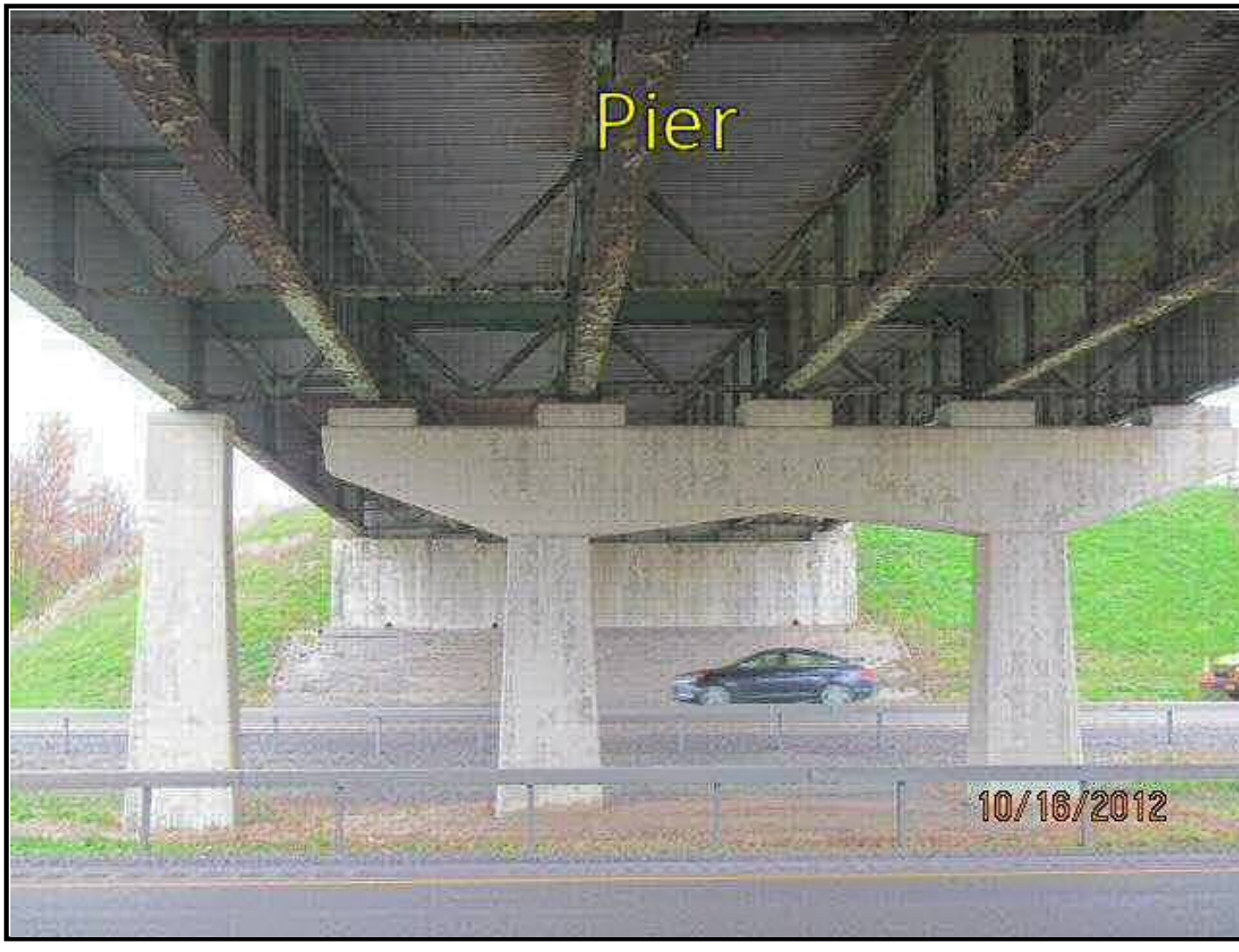

LEVEL 1 LOAD RATING SUMMARY SHEET

Region/County Region 3/Onondaga BIN 1093681
Feature(s) Carried and Crossed I-481 Southbound/I-90
Date of field inspection upon which Level 1 rating is based 2/25/2014

OVERALL BRIDGE RATTNGS (BASED ON LOWEST RATED ELEMENTS):

Total number of rating units 1

	H inventory	H operating	HS inventory	HS operating
Rating	H 40.90 (tons)	H 68.31 (tons)	HS 60.55 (tons)	HS 101.11 (tons)
Lowest rated element	Interior Girders G2 and G3	Interior Girders G2 and G3	Interior Girders G2 and G3	Interior Girders G2 and G3

Analysis method LFR Comments

Individual Rating Unit Level 1 values:

Rating unit span(s) 1

Main member ratings

	H inventory	H operating	HS inventory	HS operating
Rating	H (tons)	H (tons)	HS (tons)	HS (tons)
Lowest rated element				

Analysis method Comments

Floorbeam ratings

	H inventory	H operating	HS inventory	HS operating
Rating	H (tons)	H (tons)	HS (tons)	HS (tons)
Lowest rated element				

Analysis method Comments

Stringer ratings

	H inventory	H operating	HS inventory	HS operating
Rating	H 40.90 (tons)	H 68.31 (tons)	HS 60.55 (tons)	HS 101.11 (tons)
Lowest rated element	Interior Girders G2 and G3	Interior Girders G2 and G3	Interior Girders G2 and G3	Interior Girders G2 and G3

Analysis method LFR Comments

Certified by Date

Quality Control Engineer Signature Date
Agency or Company represented by certifier

Note:
-If connection ratings govern, record them under stringer ratings for stringer – floorbeam connection, floorbeam ratings for floorbeam-main member connections, etc.
-When Level 1 results indicated the need for load posting or other corrective action, the NYSDOT Regional Structures Engineer shall be notified immediately.
-Load ratings should be filed in the regional office within 60 days of completion of calculations.
-Bridges shall be flagged based on Level I results in accordance with the current NYSDOT flagging procedure.
-Bridge load posting, closure, etc. determinations shall be made as results are being produced.

PARSONS

100 Broadway
New York, NY 10005
Phone: 212-266-8300
Fax: 212-571-6825
www.parsons.com

TECHNICAL MEMORANDUM

FROM: Kian Siang Chau, P.E
NYSPE 082744

DATE: MARCH 26, 2014

RE: SEISMIC SCREENING SUMMARY
NEW YORK STATE DEPARTMENT OF TRANSPORTATION
D031085; PIN 3501.60; I-81

BIN: 1093681 (I-481 SB/I-90)

This memorandum summarizes the seismic screening conducted for BIN 1093681 as part of the Interstate 81 Project in Syracuse, NY. The purpose of the screening is to determine if seismic retrofits are warranted at the superstructure to substructure connection, and if further seismic evaluation of the structure is required. This memorandum will give the screening results, retrofits required and recommendations for further seismic evaluation of the structure.

SCREENING PROCEDURE

The seismic screening was performed in accordance with the FHWA Seismic Retrofitting Manual for Highway Structures: Part 1 - Bridges, January 2006. As per the referenced manual, seismic screenings were performed for both lower level and upper level earthquake ground motion. The lower level earthquake ground motion has a reasonable likelihood of occurrence within the life of the bridge (50% probability of exceedance within a 75 year bridge life). The upper level earthquake ground motion has a finite likelihood of occurrence within the life of the bridge (7% probability of exceedance within a 75 year bridge life).

Values for the spectral acceleration for the Syracuse area used in the screening are as follows:

- Lower Level Earthquake Ground Motion for a Short Period (0.2 seconds): $S_S = 0.0251$
- Lower Level Earthquake Ground Motion for a Long Period (1.0 seconds): $S_1 = 0.0076$
- Upper Level Earthquake Ground Motion for a Short Period (0.2 seconds): $S_S = 0.139$
- Upper Level Earthquake Ground Motion for a Long Period (1.0 seconds): $S_1 = 0.047$

These values are considered constant and are the same for all seismic screenings of bridges in the Syracuse area.

The Site Class is based on the soil conditions at the bridge location. It was determined that this parameter has little effect on the results of the seismic screening because the spectral acceleration values for the Syracuse area are small. Based on this, a site class of D was used for all seismic screenings of bridges in the Syracuse area.

Bridge parameters used in the seismic screening were retrieved from the record drawings and WinBolts data.

The seismic screening takes into account the anticipated service life, importance, and the seismic exposure of the bridge to determine a seismic retrofit category (SRC). The SRC is then used to determine seismic evaluation methods and retrofit measures. There are four SRCs, A through D. Seismic retrofit category A is the lowest category; bridges in this category do not require retrofits or further seismic evaluation. Seismic retrofit category D is the highest category; bridges in this category requiring the most rigorous seismic evaluations and retrofits.

SCREENING RESULTS

The SRC for the bridge is "**C**" for lower level earthquake ground motion and "**B**" for upper level earthquake ground motion.

RETROFITS REQUIRED

Seat width improvements are required at pier. Additional retrofits may be required if further seismic evaluation is needed.

RECOMMENDATIONS FOR FURTHER SEISMIC EVALUATION

For the lower level earthquake ground motion, it is recommended that capacity/demand ratios for bridge components are calculated as per Section 5.4 of the referenced manual. For the upper level earthquake ground motion, it is recommended that the capacities of the bearings are checked as per Section 5.2 of the referenced manual.

Retrofit cost estimates will be provided after any further required seismic evaluations are completed.

BRIDGE DECK EVALUATION REPORT

RECOMMENDATIONS

The bridge deck inspection findings and evaluation are used as a tool for developing the scope of work and cost estimates for the development and comparison of alternatives for the overall project.

The total damaged area of the deck is 0% of the total deck surface area. The cores indicate the reinforcement steel is 4.25 inches below the surface of the deck. The lab test indicates that chloride ion concentrations at all the sample locations are significantly higher than the corrosion threshold for steel.

Due to the age, condition and high chloride ion content of the bridge deck concrete, the bridge deck should be rehabilitated or replaced to meet the current standards and to mitigate excessive future maintenance costs.

ALTERNATIVES

- Rehabilitation Alternative - 2 inches Bonded Concrete Overlay
  - Scope

    The scope of this alternative will include the complete removal of the bridge railings, curb and safety walks, and fascias to the level of the original top of the deck. The joint will be removed. The top 2 inches of the entire deck will be removed and areas of deteriorated concrete must be removed to at least 1 inch below the level of the reinforcement steel and to the horizontal and vertical limit of any detectable hollow areas. Additionally, any further areas of deteriorated concrete detected will require full depth removal. Any corrosion of the reinforcement steel will be removed by sandblasting or hydro-blasting. The proposed deck overlay will be a 2 inches thick bonded concrete overlay yielding a nominal 9.5 inches standard thickness deck. A new single-sloped concrete barrier and a new armorless joint will be installed. The Level 1 Load Rating for the final condition was found to be acceptable.

- Useful Life Expectancy

  The removal of the top 2 inches of the existing deck will remove a portion of the deck with high chloride ion concentrations. It can be anticipated that chloride ions will continue to migrate into the remaining deck to the reinforcing steel resulting in further corrosion-related deterioration of the deck surface. Concrete admixtures will be included in the bonded concrete overlay to impede the continued penetration of chloride into the deck from the surface. This alternative will result in an extended useful life expectancy estimated at 20 years.

The design life of the project is 30 years (ETC + 30). This alternative does not meet the project objectives of obtaining 30 years of service life and is not evaluated further.

- Rehabilitation Alternative – 100% Deep Removal and Partial Deck Reconstruction
  - Scope

    The scope of this alternative will include the complete removal of the bridge railings, curb and safety walks, and fascias to the level of the original top of the deck. The joint will be removed. The scope of this alternative will include partial depth reconstruction with removal of the concrete to at least 1 inch below the top mat of the reinforcement steel. Additionally, any further areas of deteriorated concrete detected will require full depth removal. Any corrosion of the reinforcement steel will be removed by sandblasting or hydro-blasting. Due to the condition of the deck, full depth removal is not likely and not included in the cost estimate. The proposed deck partial reconstruction will be a nominal 5.75 inches thick concrete deck yielding a 9.5 inches standard thickness deck. A new single-sloped concrete barrier and a new armorless joint will be installed. The Level 1 Load Rating for the final condition was found to be acceptable.
  - Useful Life Expectancy

    This alternative will provide a useful life expectancy is estimated at 35 years.
  - Cost Estimate

    The estimated cost for this alternative is $730,000. The Engineer's Opinion of Probable Construction Cost worksheet is at the end of this section.

- Replacement Alternative – Cast-In-Place Concrete
  - Scope

    This scope of this alternative will include the complete demolition of the existing bridge deck, bridge railings, curb and safety walks, fascias and bridge joint. The bridge deck will be replaced with a new 9.5 inches standard thickness concrete deck. A new single-sloped concrete barrier and a new armorless joint will be installed. The Level 1 Load Rating for the final condition was found to be acceptable.
  - Useful Life Expectancy

    This alternative will provide a useful life expectancy is estimated at 40+ years.
  - Cost Estimate

    The estimated cost for this alternative is $1,035,000. The Engineer's Opinion of Probable Construction Cost worksheet is at the end of this section.

- Replacement Alternative – Pre-cast Concrete Deck Panels
  - Scope

    The scope of this alternative is similar to the Cast-In-Place Concrete Deck Replacement Alternative except the deck structure will be precast panels. This alternative offers reduced construction time over conventional construction.
  - Useful Life Expectancy

    This alternative will provide a useful life expectancy is estimated at 40+ years.
  - Cost Estimate

    The comparison of accelerated construction to conventional construction is beyond the current scope of this evaluation.

IN-DEPTH INSPECTION REPORT

D031085 P.I.N. 3501.60

ELEMENT SPECIFIC BRIDGE WORK

B.I.N. 1093682

TEAM LEADER Andrew P. Thompson 84914
NYSPE LICENSE #

ASSISTANT TEAM LEADER Mike Savino

FEATURE CARRIED I481 Northbound

FEATURE CROSSED I90

DATE FIELD WORK BEGAN 12/19/13

DATE FIELD WORK COMPLETED 2/25/14

TABLE OF CONTENTS

- STRUCTURE IDENTIFICATION
- INTRODUCTION
- PROJECT LOCATION MAP
- IN-DEPTH CONDITION DOCUMENTATION
- PLANS & SKETCHES
- IN-DEPTH PHOTO DOCUMENTATION
- ASBESTOS SAMPLING SURVEY
- LATEST BIENNIAL INSPECTION REPORT

STRUCTURE IDENTIFICATION

a. Bridge Identification Number (BIN): 1093682
b. Reference Marker: 481I 3301 2088
c. Region: NYSDOT Region 3
d. County: Onondaga
e. Town: Dewitt
f. Feature Carried: I481 Northbound
g. Feature Crossed: I90

INTRODUCTION

a. Bridge History
   i. Year Built: 1972
   ii. Bridge Type: Two Span, Steel Multi-girder
   iii. Span 1 Length: 100 feet
   iv. Span 2 Length: 100 feet
   v. Out-to-Out Width: 44 feet
   vi. Structural Ratings and Rankings
      1. Federal Sufficiency: 84.9 (October 2012)
      2. Condition Rating: 4.625 (October 2012)
      3. General Recommendation: 5
   vii. Live Load Posting (HS25): No
   viii. National Highway System (NHS): Yes
   ix. Previous work Done: Overlay, new joints, new bearings & concrete repairs (2004). Superstructure painted (2013).
   x. Planned Future Work: N/A
b. Highway Classification
   i. Functional Classification: Urban Principle Arterial - Interstate
   ii. Traffic Volumes

YEAR	AADT Projected
2014	21658
2034	32183
2054	47823

   iii. Plan for Maintenance and Protection of Traffic: Maintenance and Protection of traffic will be achieved by staged construction.

PROJECT LOCATION MAP

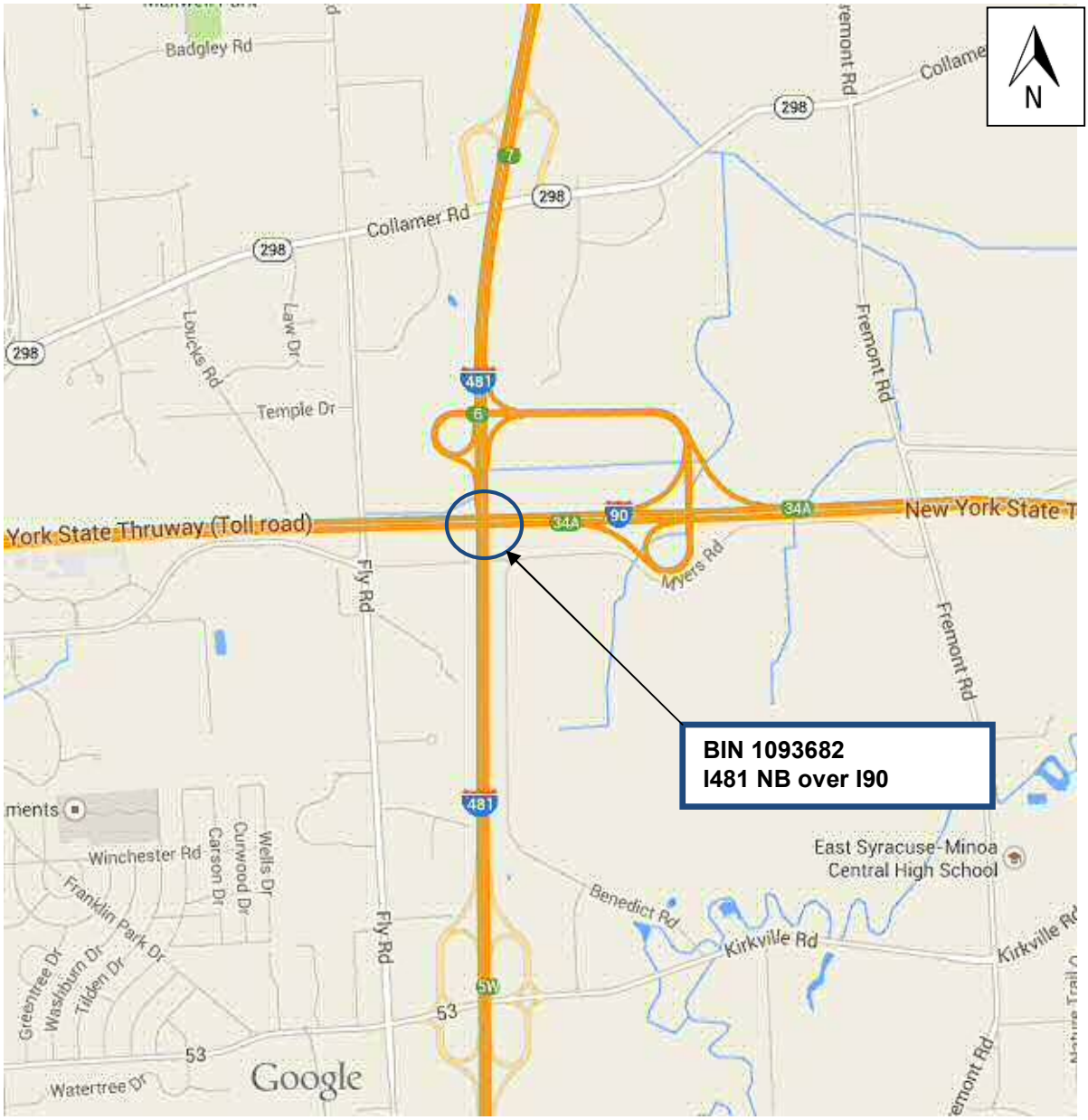

IN-DEPTH CONDITION DOCUMENTATION

NYS DEPT. OF TRANSPORTATION BRIDGE **BIN** 1093682 **SHEET:** 1 **OF** 4 **DATE:** 2/25/2014

FEATURE CARRIED: I-481 NB
FEATURE CROSSED: I-90

TEAM LEADER: A.THOMPSON
A. TEAM LEADER: M. SAVINO

ITEM	REMARKS	PHOTO N0.
TP 349-22	Begin Abutment - Joint with Deck: The begin joint is expansion. The visible portion of the compression seal is detached from the header and partially torn for a 1.5' length 3' from the left of the right lane (Photo 1). Remaining seal is in good condition. The begin header has hairline cracking spaced at +/-15" in the right shoulder starting 1' to the left of the shoulder (Photo 2). The remainder of the header is in good condition. No signs of significant leakage were noted below.	1,2
TP 349-23	End Abutment - Joint with Deck: The end joint is expansion. The seal is in good condition. The end header has hairline cracking spaced at +/-15" in the right shoulder starting 1' to the left of the shoulder similar to the begin joint (Photo 3). Remainder of header is in good condition. No signs of significant leakage were noted below.	3
TP 349-27	End Abutment – Seats and Pedestals: There is a 6 sf hollow area in Bay 3 (Photo 4). Cracking was noted on the seats and top of the stem as shown in the End Abutment Deterioration Sketch. The pedestals are in good condition.	4
TP 349-28	Begin Abutment – Backwall: There is a 3’ high x 1.5’ wide x 1’ deep max. area at the top left that is spalled and hollow (Photo 5). There is also a 3/16" wide diagonal crack at the top right with 1/2" deep x 4" wide spalling along it and a 0.5 sf hollow area to its right (Photo 6). The remainder of the backwall is in good condition.	5,6
TP 349-29	End Abutment – Backwall: There is a 2.5’ dia. x 7” deep spall with exposed rebar at the top right corner (Photo 7). At the left there is a 3’ high x 2.5’ wide spall that is 10” deep max. at the top with exposed rebar (Photo 8). The remainder of the backwall is in good condition.	7,8
TP 349-30	Begin Abutment – Stem: The begin stem is in good condition with some hairline cracking mostly in Bay 4 (Photo 9). No hollow sounding areas were found (Photo 10).	9,10
TP 349-31	End Abutment – Stem: The end stem has several cracked and hollow areas with isolated spalling (Photo 11). There is a spall in Bay 3 measuring 7” wide x 3.5’ long x 1.13” deep with an adjacent 8 sf hollow area (Photo 12). See End Abutment Deterioration Sketch.	11,12

ITEM	REMARKS	PHOTO N0.
TP 350-21	Spans 1 and 2 - Deck Elements - Sidewalks and Fascias: Sidewalks: Snow was removed from the safety walks at both ends of the spans as well as a few locations along the span for inspection. Both sidewalks were in good condition where exposed. Fascias: Both fascias in Span 1 have hairline cracking throughout (Photo 13). The Span 2 left fascia has an 8" dia. x 1.5" deep spall at the begin with no exposed rebar (Photo 14). There is also a 1' long x 2" wide x 1" deep spall at the bottom chamfer between snow fence posts 6 and 7 with a 0.5 sf hollow area adjacent to it (Photo 15), and a 0.5 sf hollow and cracked area at the bottom chamfer between snow fence posts 7 and 8 (Photo 16). The Span 2 right fascia has a 1' x 8" x 1.5" deep triangular spall located 8' from the end (Photo 17). The remainder of the Span 2 fascias have hairline cracking throughout.	13-17
TP 350-22	Spans 1 and 2 - Deck Elements – Railings/Parapets: The bridge railing is in good condition. Snow fencing is present over the I-90 travel lanes and median on both sides of the bridge. The snow fence consists of 12 steel pipe posts in each span located at rail posts, steel pipe rails, and chain link fencing. Some of the bottom pipe rails are rusted at their connection to the posts. On the right in Span 1 the bottom pipe rail at Post 8 is rusted through and detached at the begin. On the right in Span 2 the bottom pipe rails at Posts 2 and 4 are rusted through and detached at the begin (Photo 18). The bottom rails at several other posts throughout both spans are rusted but intact. The remainder of the snow fencing is in good condition.	18
TP 350-27	Spans 1 and 2 - Superstructure – Structural Deck: The structural deck is a 9.5" thick concrete mono deck with SIP forms. No hollow areas, cracked areas, or patches were found (Photo 19). The original 8" deck was rehabed in 2004 down to the top rebar mat. The deck has SIP forms, and the underside is exposed only at the overhangs and at the haunches adjacent to the abutment backwalls. The overhangs have map cracking and transverse hairline cracking throughout (Photo 20). The haunch at the begin abutment has a 3' long x 10" high spall at the left (Photo 5). The remainder of the begin haunch area has only hairline cracking. The haunch at the end abutment has a 4' long x 6" high x 5" deep spall in Bay 1 (Photo 21). There is a loose portion of haunch that extends from Girder 2 to Girder 3 (Photo 22). The remainder of the end haunch area has only hairline cracking. The SIP forms in both spans have surface rust but are in good condition (Photo 23). A 2.5' long x full width section of SIP form is missing in Bay 1 near the end (Photo 24).	5,19-24

ITEM	REMARKS	PHOTO N0.
TP 350-21	Spans 1 and 2 - Superstructure – Primary Members: The steel girders are in good condition with no significant section loss (Photo 23 and 25).	23,25
TP 350-30	Spans 1 and 2 - Superstructure – Paint: The girders and diaphragms have been painted since the 2012 Biennial Inspection, and the paint is in good condition (Photos 23 and 25).	23,25
TP 350-31	Spans 1 and 2 - Superstructure – Joints: The Span 1 joint is fixed. The visible portion of the compression seal is detached from the header and partially torn for a 1.5' length located 3' from the left edge of the right lane (Photo 26). The remaining seal is in good condition. No significant leakage was noted from underneath.	26
TP 350-33	Pier – Bearings: The fixed bearings on the pier have been painted since the 2012 Biennial Inspection. Bolts are loose, sheared, or missing at Bearing 2 end right (Photo 27), Bearing 3 end left (Photo 28), and Bearing 5 begin left (Photo 29). The remaining bearings are in good condition.	27-29
TP 350-34	Pier – Pedestals: There is a 0.5 sf hollow area on the begin right corner of Pedestal 4 adjacent to a hollow area on the cap beam (Photo 30). Pedestal 5 is cracked on its begin and right faces with an 8” square hollow area at the begin right corner (Photo 31). The remaining pedestals are in good condition.	30,31
TP 350-37	Pier – Cap Beam: The begin face of the cap beam at the top has two hollow areas measuring 1.5’ wide x 10” high under Pedestal 4 (Photo 30) and 16” wide x 1’ high in Bay 4 (Photo 32). The end face has a 16” long 1/32” wide crack in Bay 1 located 4” below the seat (Photo 33) and a 1.5’ long x 10” high hollow area at the top under Pedestal 4 (Photo 34). The remainder of the cap beam has scattered hairline cracks.	30 32-34
TP 350-38	Pier – Columns: The front face of the right column has a 2.5’ wide x 1’ high spall at the bottom and a 1’ wide x 2’ high spall located 3’ from the bottom (Photo 35). Both spalls have exposed rebar and hollowness surrounding them. The hollowness extends to the right face for a 4” wide x 6’ high area. The remainder of the right column and the entire left column is in good condition.	35

NYS DEPT. OF
TRANSPORTATION BRIDGE

BIN 1093682

SHEET: 4 OF 4
DATE: 2/25/2014

FEATURE CARRIED: I-481 NB
FEATURE CROSSED: I-90

TEAM LEADER: A.THOMPSON
A. TEAM LEADER: M. SAVINO

ITEM	REMARKS	PHOTO N0.
	Special Emphasis Inspection Required Non-Redundant/Fracture Critical Members - No Pin and Hangers - No Fatigue-Prone Welds - No Non-Categorized Fatigue-Prone Details - No Other - No	

PLANS & SKETCHES

8

Douglas Gillespie 9/10/96 6/2/97 10B28L 1093682

Gary Cook 7/29/97

Gary Cook 09/21/98

Gary Cook 08/30/99

Douglas Gillespie 11/16/00

Gary Cook 10/30/02

Everett Parks 11/13/02

D250095

FED. RD. REG. NO.	STATE	FEDERAL AID PROJECT NO.	SHEET NO.	T
	NEW YORK	I-481-2(152)	289	

Interstate Rte 571 Extension (I-481)
Collamer Interchange to Northern Blvd.
Onondaga County

CAPITAL PROJECT IDENTIFICATION NO. 3107.00-11-

INDEX

DRAWING TITLE	DWG
PLAN & PROFILE	1,2
ESTIMATE & NOTES	3
EXCAVATION & BACKFILE	4
NORTH ABUTMENT	5,6,7
PIER	8
SOUTH ABUTMENT	9,10,11
SUPERSTRUCTURE	12,13,14,15
LOW STEEL BEARINGS	16
RAILING LAYOUT	17
SOD GUTTER DETAILS	18
MISCELLANEOUS DETAILS	19
SUBSURFACE PROFILE	20
JOINT DETAILS	21,22
BAR LISTS	23,24

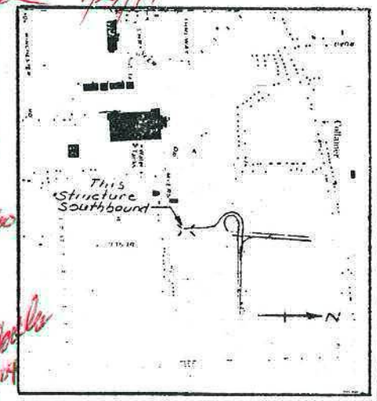

LOCATION MAP
SYRACUSE EAST QUADRANGLE
Scale: 1"=2000'

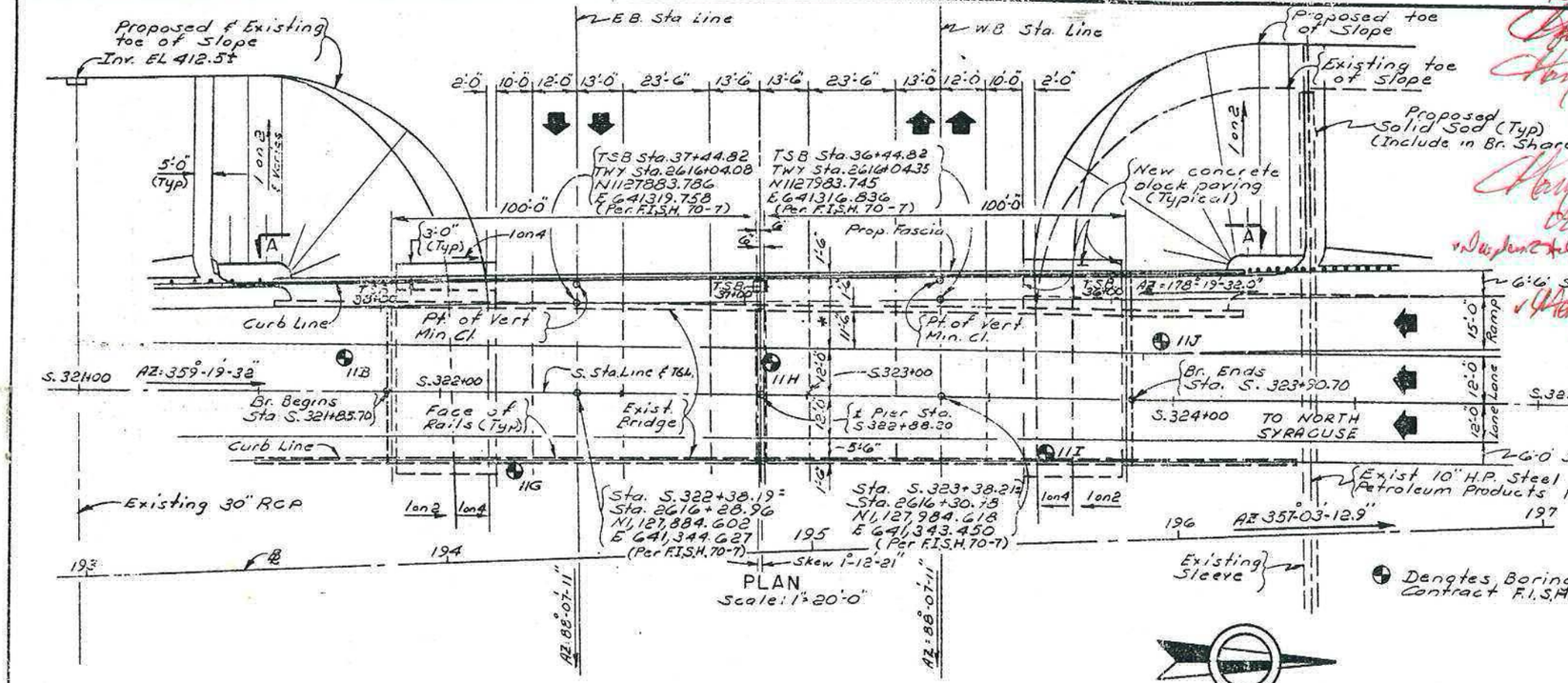

Denotes Borings under Contract F.I.S.H. 70-7

D.J. Hann 11/18/10

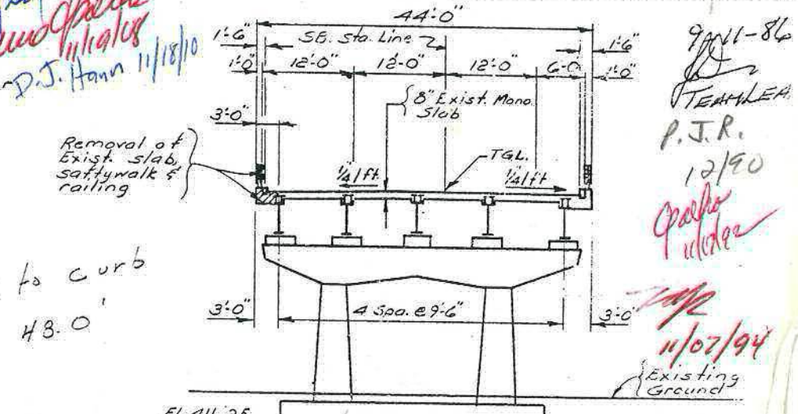

9/11-86 TEAMLEA P.J.R. 12/90 Grade under 11/07/94

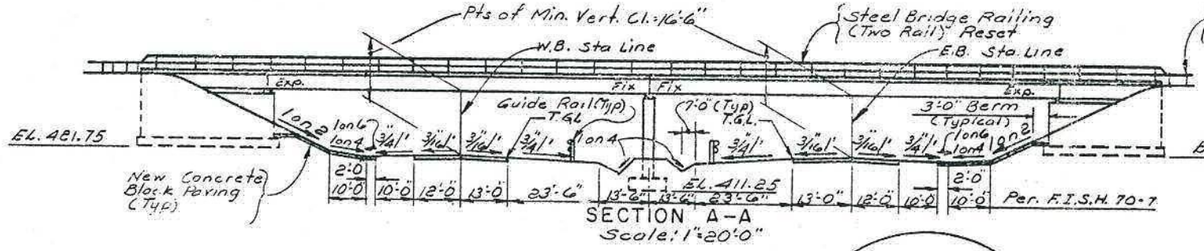

Existing 10" H.P. Steel Petroleum Products Pipe (To Remain)

curb to curb 48.0'

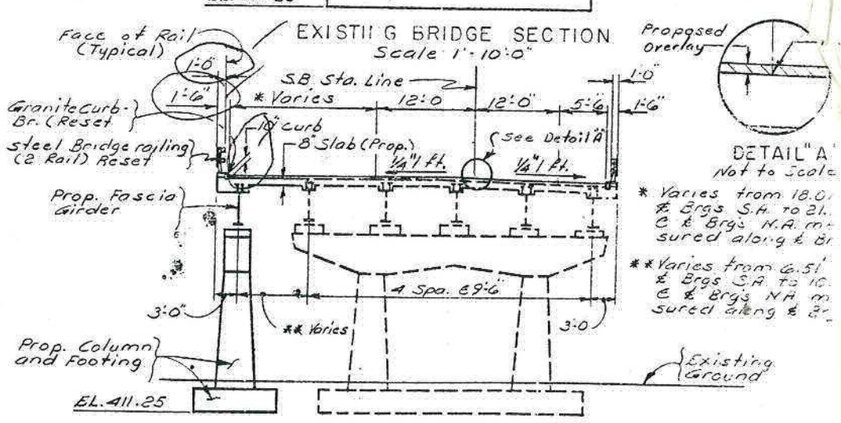

DETAIL "A"
Not to Scale

* Varies from 18.0' ± Brgs S.H. to 21.0' ± C & Brgs N.A. measured along ℄ Br.

** Varies from 6.5' ± Brgs S.H. to 10.0' ± C & Brgs N.A. measured along ℄ Br.

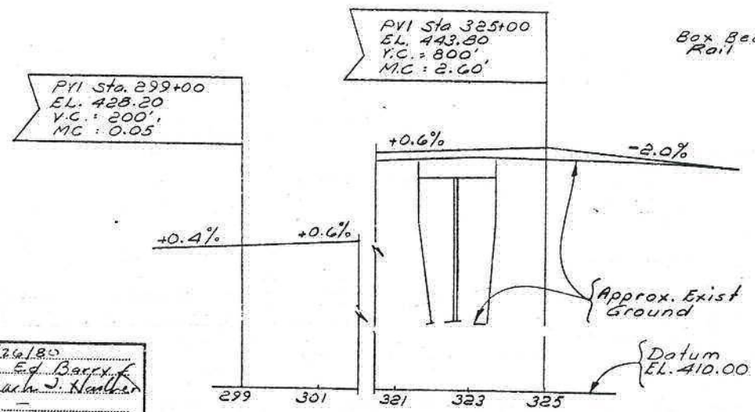

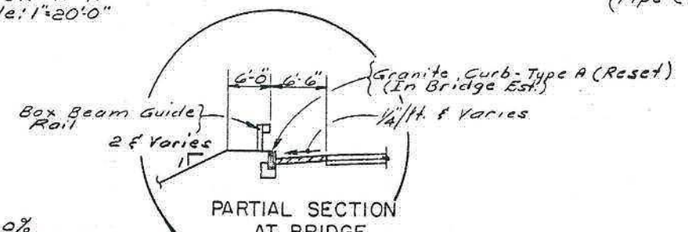

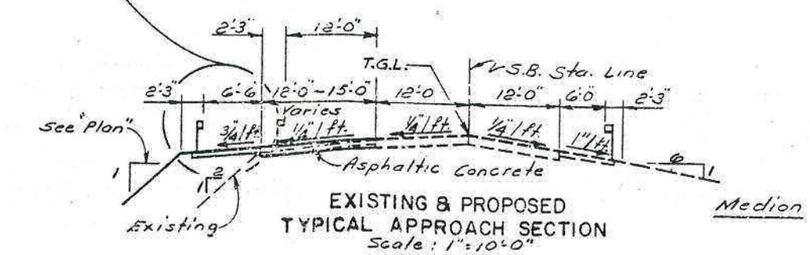

B.I.N. - 1093681

DATE MADE 8/26/80
PROJECT ENGINEER Ed Barry
IN CHARGE OF John J. Hartley
DESIGNED BY —
DESIGN CHECKED BY —
DETAILED BY J. DeSouza
DETAIL CHECKED BY —

STATE OF NEW YORK
DEPARTMENT OF TRANSPORTATION
DIVISION OF CONSTRUCTION

SOUTHBOUND I-481 OVER N.Y.S. THRUWAY

PLAN & PROFILE

1093682 D250094

FED. RD. REG. NO.	STATE	FEDERAL AID PROJECT NO.	SHEET NO.	TOTAL SHEETS
	NEW YORK	I-481-2(152)	290	312

Interstate Rte. 571 Extension (I-481)
Collamer Interchange to Northern Blvd.
Onondaga County

CAPITAL PROJECT IDENTIFICATION NO.

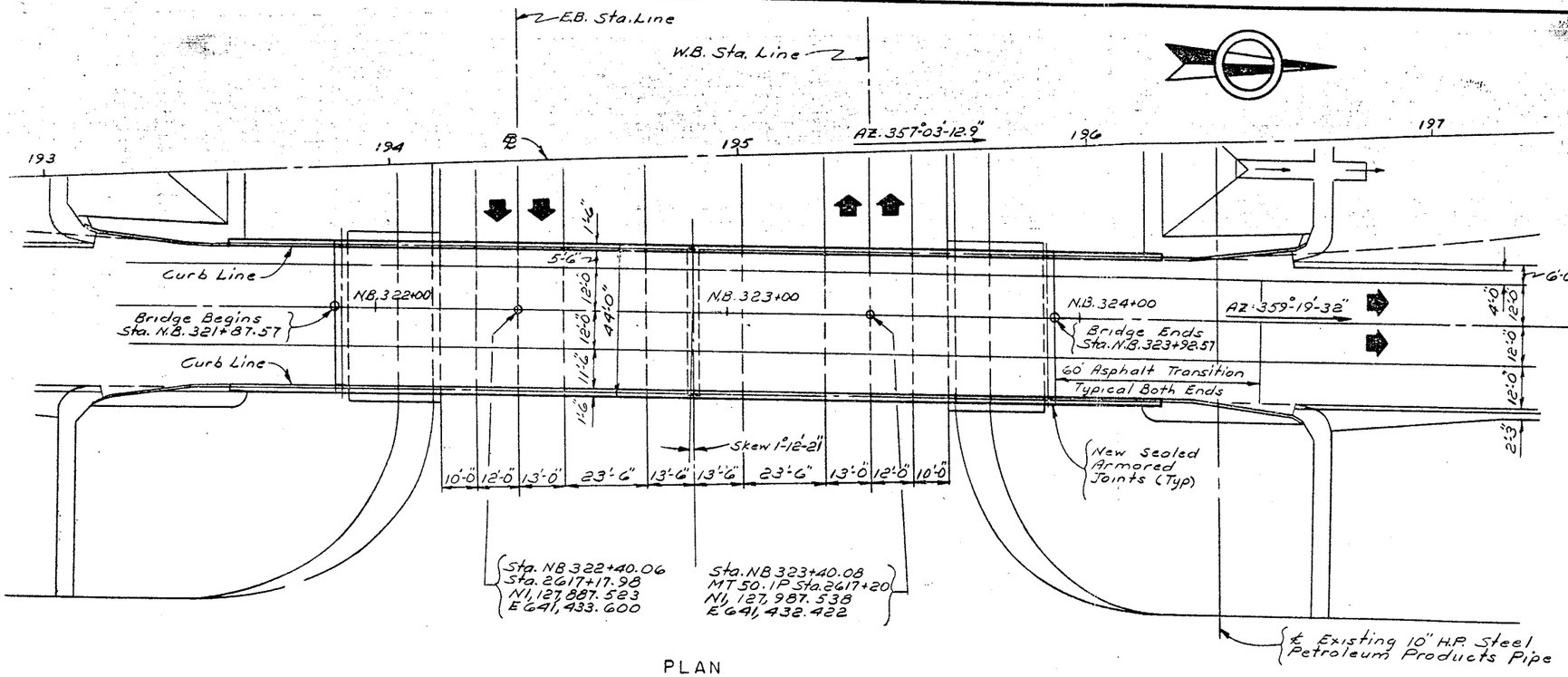

PLAN
BRIDGE NO. 4N
Scale: 1"=20'-0"

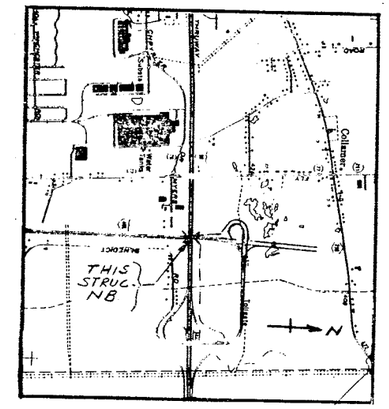

LOCATION MAP
SYRACUSE EAST QUADRANGLE
Scale: 1"= 2000'

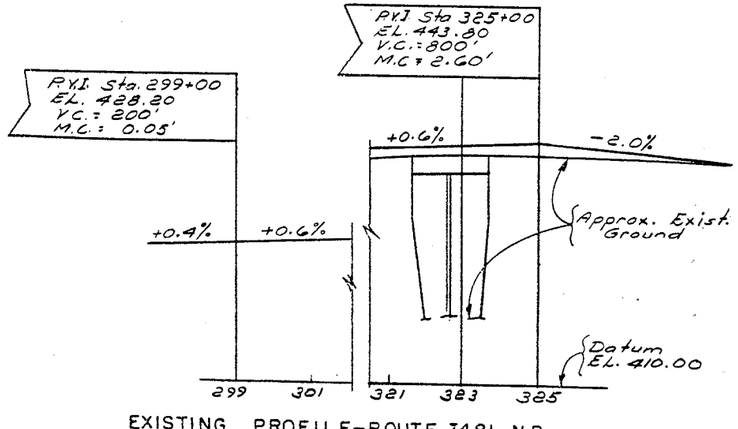

EXISTING PROFILE-ROUTE I481 NB
Scale: Horiz. 1"=200', Vert. 1"=10'-0"

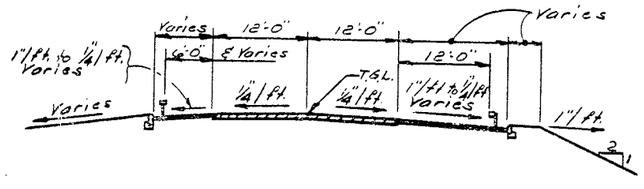

TYPICAL
EXISTING APPROACH SECTION
Scale: 1"=10'-0"

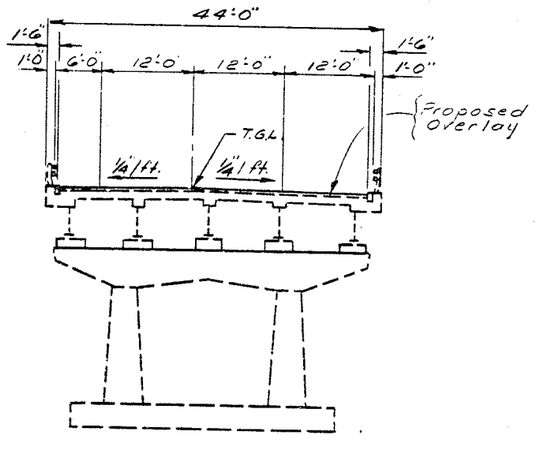

BRIDGE SECTION
Scale: 1"=10'-0"

BIN 1093682

STATE OF NEW YORK
DEPARTMENT OF TRANSPORTATION
DIVISION OF DESIGN AND CONSTRUCTION

NORTHBOUND I-481 OVER
N.Y.S. THRUWAY

PLAN & PROFILE

PROJ. ENG. [illegible] DATE [illegible]

D250094

FED. RD. REG. NO.	STATE	FEDERAL AID PROJECT NO.	SHEET NO	TOTAL SHEETS
	NEW YORK	I-481-2(152)	301	312

Interstate Rte. 571 Extension (I-481)
Collamer Interchange to Northern Blvd.
Onondaga County

1093682

CAPITAL PROJECT IDENTIFICATION NO. 3107.00-114-77

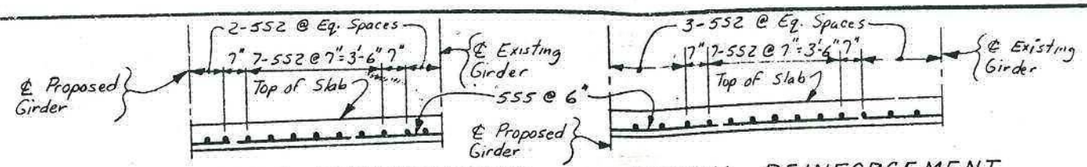

BOTTOM REINFORCEMENT SPAN NO. 1

BOTTOM REINFORCEMENT SPAN NO. 2

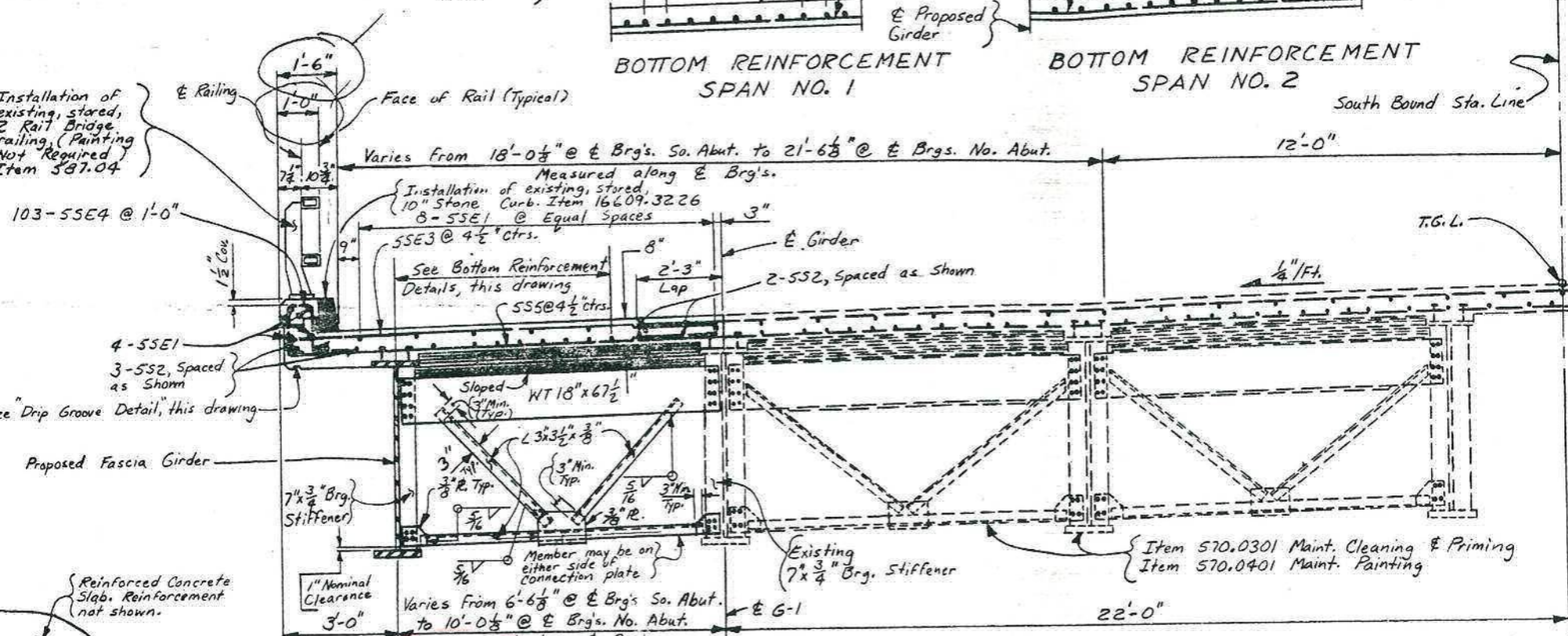

PARTIAL TRANSVERSE SECTION
No Scale

Proposed End Diaphragm at Pier & Abutments
D1

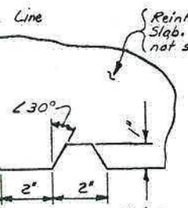

GROOVE DETAIL
No Scale

Note: Drip groove stops 3'-0" From face of Abutments and Piers.

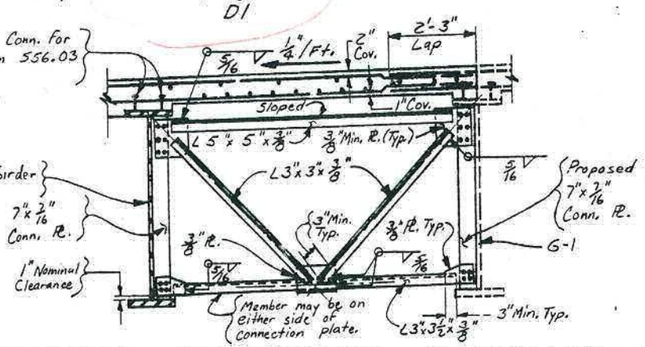

PROPOSED INTERMEDIATE DIAPHRAGM - D2
No Scale

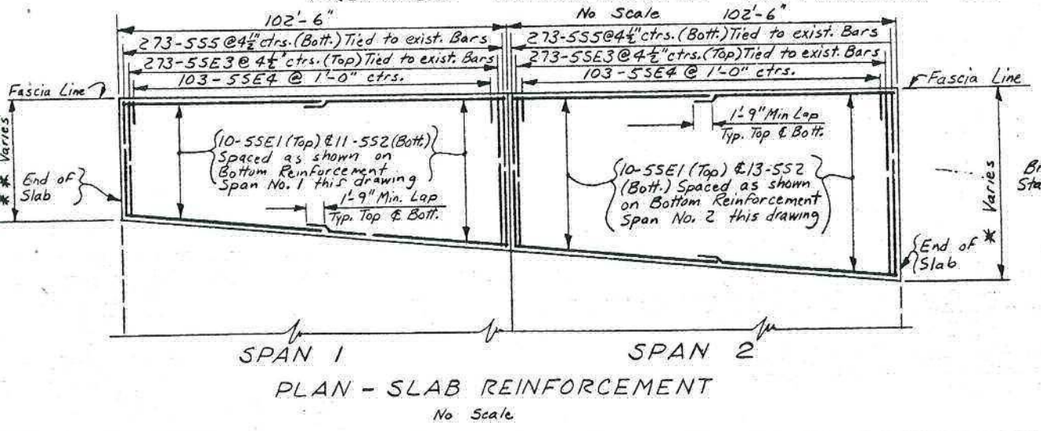

PLAN - SLAB REINFORCEMENT
No Scale

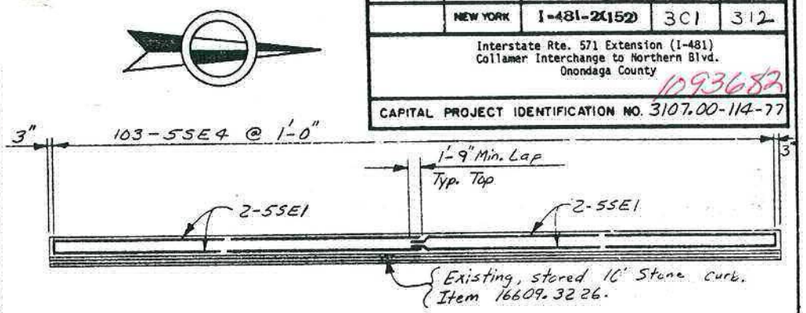

WEST OVERLAY REINFORCEMENT - SPAN 1
(SPAN 2 SIMILIAR)

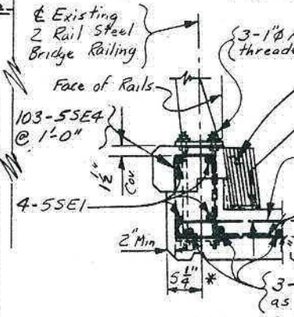

No Scale

3-1"ø Anchor bolts, 1'-7" lg. (min.) threaded full length at each Railing Post.

Existing 10" Stone Curb

* For more dimensions on Fascia see Dwg. No. 17, RAILING LAYOUT.

FASCIA DETAIL
No Scale

NOTES

The structural slab shall be formed with permanent stay-in place forms under Item 555.0401. For details see dwg. no. 15.

Dashed lines indicate existing structure.

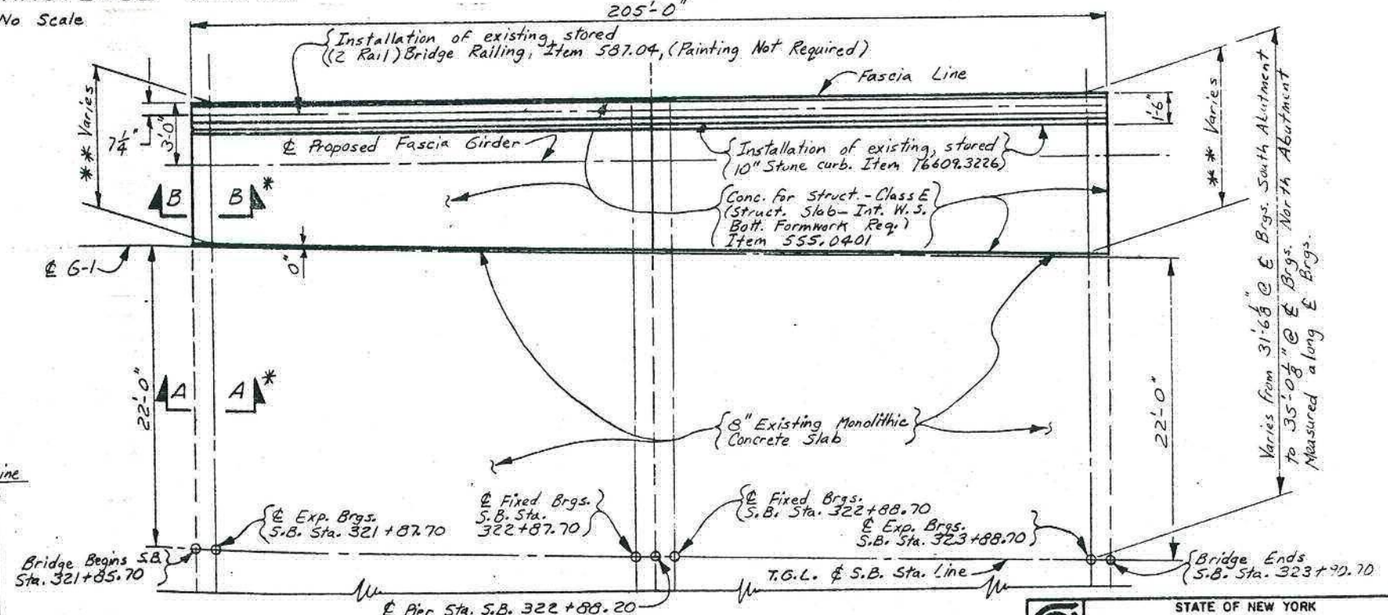

PARTIAL PLAN
No Scale

** Varies From 9'-6 1/8" @ ℄ Brg's. South Abutment to 13'-0 3/8" @ ℄ Brgs. North Abutment. Measured along ℄ Brgs.

* For Sections A-A & B-B see Dwg. No. 14

STATE OF NEW YORK
DEPARTMENT OF TRANSPORTATION
DIVISION OF DESIGN AND CONSTRUCTION

SOUTHBOUND I-481 OVER N.Y.S. THRUWAY

SUPERSTRUCTURE (PROPOSED)

(2 OF 4)

PROJ. ENG.	DATE MADE 5-13-81
SQUAD	DRAWING NO. 15 OF 24

D250094

FED. RD. REG. NO.	STATE	FEDERAL AID PROJECT NO.	SHEET NO.	TOTAL SHEETS
	NEW YORK	I-481-2(152)	302	312

Interstate Rte. 571 Extension (I-481)
Collamer Interchange to Northern Blvd.
Onondaga County

CAPITAL PROJECT IDENTIFICATION NO. 3107.00-114-77

1093682

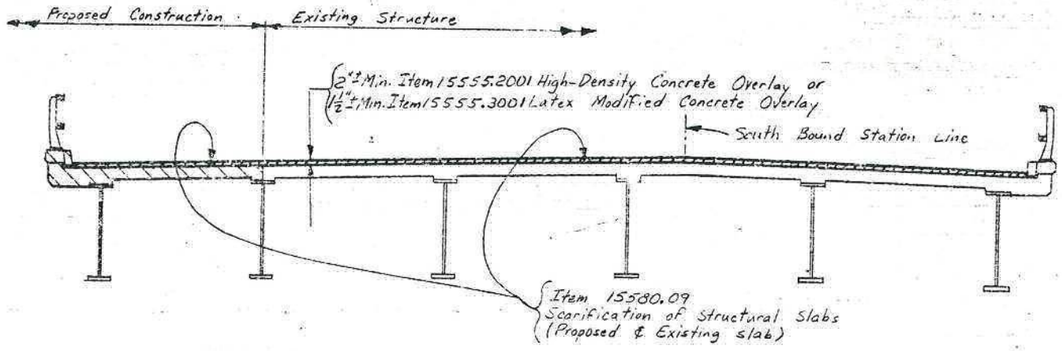

TRANSVERSE SECTION
No Scale

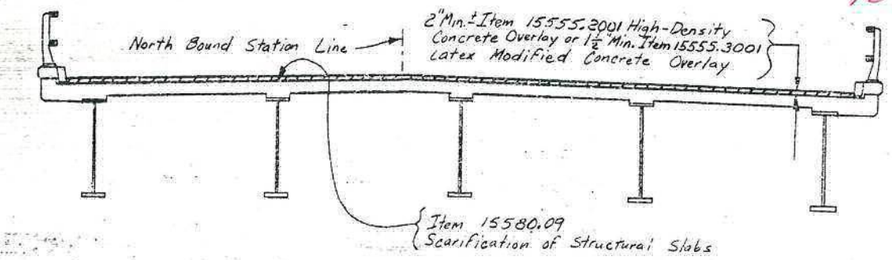

TRANSVERSE SECTION
No Scale

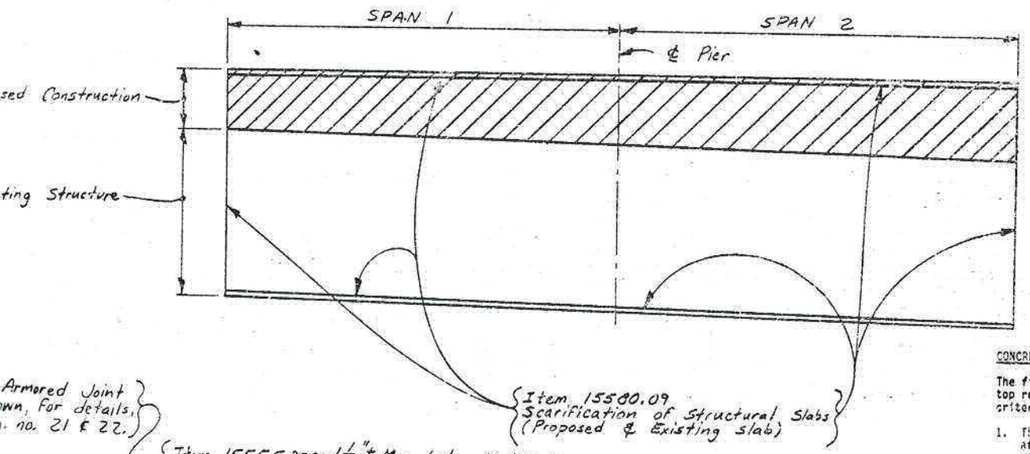

PLAN
No Scale

SOUTHBOUND

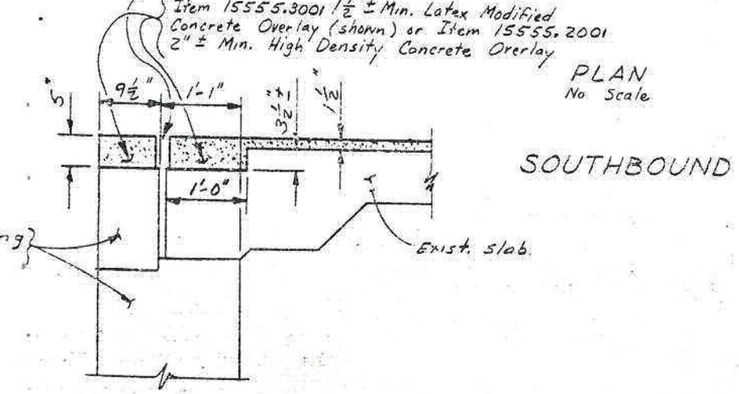

SECTION A-A*
No Scale

CONCRETE OVERLAY NOTES

The finished overlay profiles for these structures are based on the existing top reinforcing bar cover (shown elsewhere in the plans) using the following criteria:

1. The minimum total cover (cover remaining over the reinforcing bars after the concrete removal (if any) plus the thickness of the new overlay material) shall be 2¾ inches.
2. The minimum thickness of the High Density Concrete Overlay shall be 2 inches.

If the Contractor has elected to bid on Item 15555.3001 Latex Modified Concrete Overlay, then the Contractor may submit a proposed finished profile to the Regional Director for approval. The proposed finished profile shall be submitted to the Regional Director at least two weeks before placement of the overlay and shall be based on the following criteria:

1. The minimum total cover (cover remaining over the reinforcing bars after the removal plus the thickness of the new overlay material) shall be 2¾".
2. The minimum thickness of the Latex Modified Concrete Overlay shall be 1¾ inches.
3. The transition lengths between the existing profile and proposed finished profile shall be of the same lengths as shown on the plans.
4. The Contractor's proposal may include additional grade transitions subject to the following:
   a. The minimum length between grade transitions shall be 60 feet.
   b. The slope of the grade transition shall not differ from the slope of the adjacent sections by more than .005% at the completion of the work.
   c. The slope changes do not create drainage problems on the bridge deck.

No overlay material shall be placed until the Regional Director has approved a satisfactory proposed finished profile.

* For location of Sections A-A & B-B See Drawing No. 13.

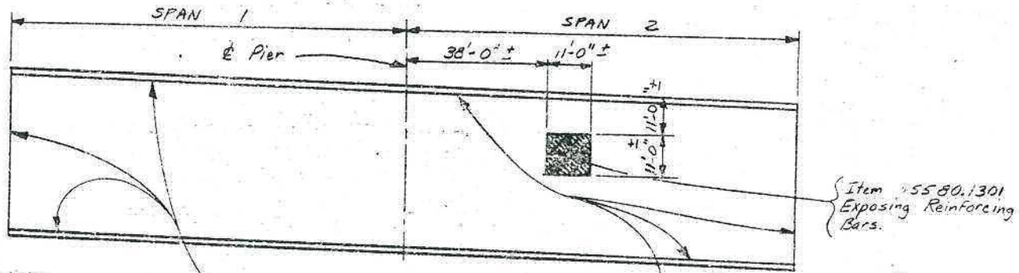

PLAN
No Scale

NORTHBOUND

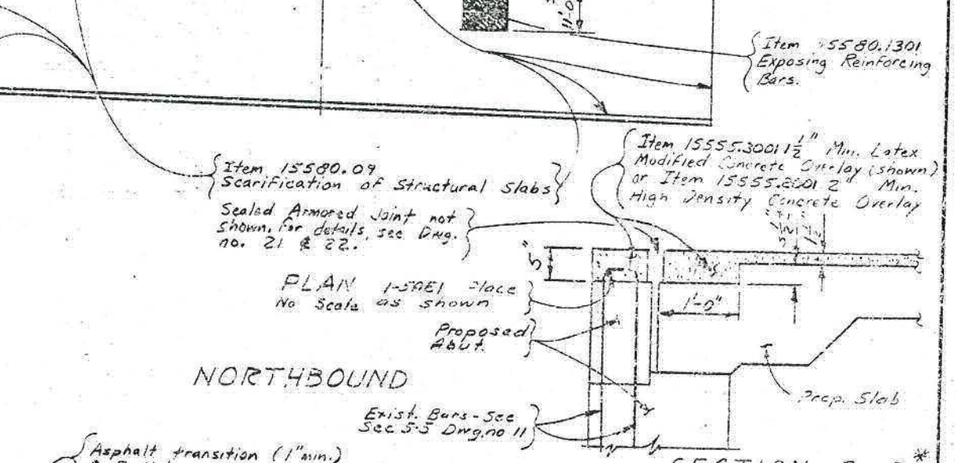

SECTION B-B*
No Scale

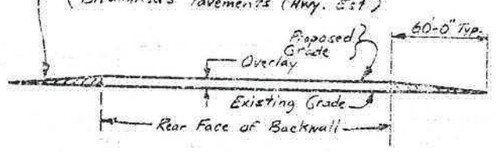

LONGITUDINAL SECTION
No Scale

STATE OF NEW YORK
DEPARTMENT OF TRANSPORTATION
DIVISION OF DESIGN AND CONSTRUCTION

I-481 OVER
N.Y.S. THRUWAY

SUPERSTRUCTURE
CONCRETE OVERLAY
(3 OF 4)

PROJ. ENG. Ed Barry | DATE MADE 5-28-81
DRAWN [illegible] | DRAWING NO. 14 OF 24

109-3687

D250094

FED. RD. REG. NO.	STATE	FEDERAL AID PROJECT NO.	SHEET NO.	TOTAL SHEETS
	NEW YORK	I-481-2(15)2	303	312

Interstate Rte. 571 Extension (I-481)
Collamer Interchange to Northern Blvd.
Onondaga County

CAPITAL PROJECT IDENTIFICATION NO.

Welding Notes
* F.P.G.W. = Full Penetration Groove Weld
M.B. = Mill to Bear

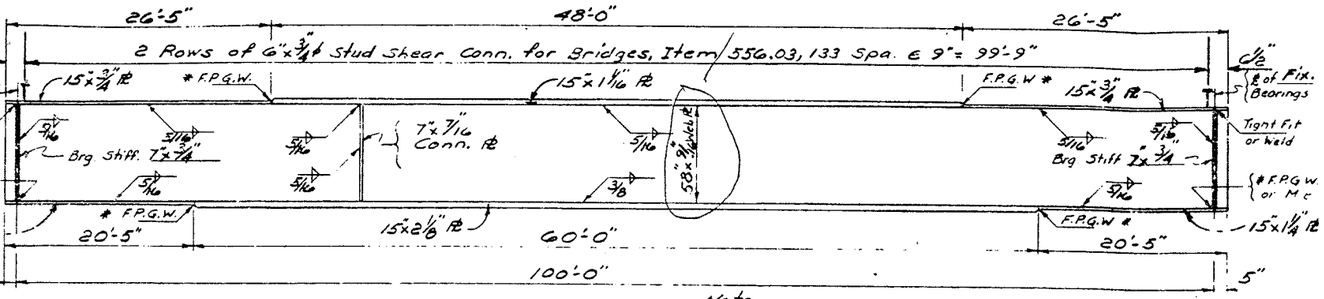

GIRDER DETAIL
Not to Scale

Note
Flange Thickness Transition shall conform to New York State Steel Construction Manual.

MOMENT & SHEAR TABLE

PROPOSED FASCIA GIRDERS

		℄ BRG	MID PT
D.L.	Moment	0	1709
	Shear	70	0
S.D.L.	Moment	0	325
	Shear	13	0
L.L.(+)	Moment	0	1552
	Shear	66.5	0

CAMBER TABLE

PROP. FASCIA GIRDERS

Vertical Curve (Ft).	.041
Steel D.L. (Ft)	.032
Concrete D.L. (Ft.)	.148
Superimposed D.L. (Ft)	.021
Total (Ft)	.242

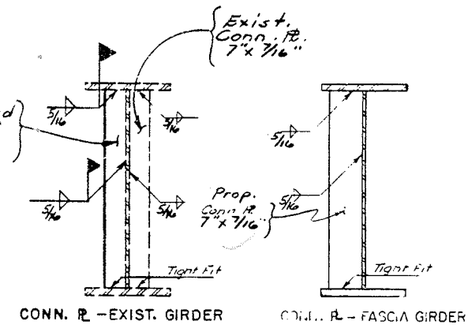

CONN. PL – EXIST. GIRDER CONN. PL – FASCIA GIRDER

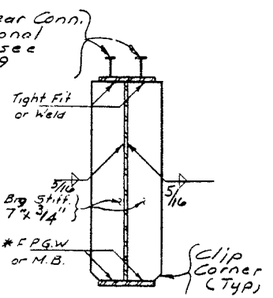

BRG. STIFF.

GIRDER SECTIONS
Not to Scale

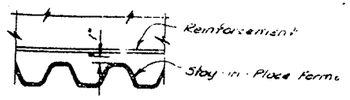

SECTION A-A
Not to Scale

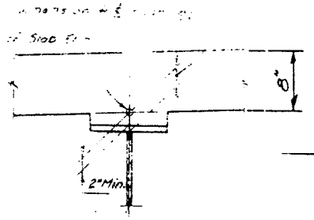

GIRDER HAUNCH DETAIL
Not to Scale

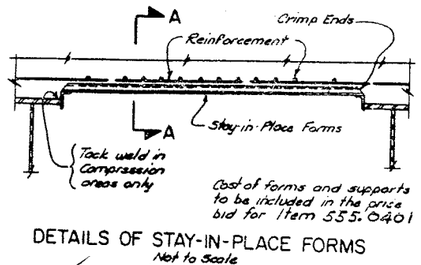

Cost of forms and supports to be included in the price bid for Item 555.0401

DETAILS OF STAY-IN-PLACE FORMS
Not to Scale

DESIGN LOAD TABLE/GIRDER

	UNIT	LOAD / FT
D.L.	SLAB	.969 K/Ft.
	HAUNCH	.039 K/Ft.
	GIRDER	.247 K/Ft.
	S.I.P. FORMS	.147 K/Ft.
	DIAPHRAGMS	.030 K/Ft
	TOTAL	1.432 K/Ft.
S.D.L.	SAFETY WALK	.063 K/Ft.
	RAILING	.013 K/Ft.
	FUT. WEAR. SURF.	.184 K/Ft.
	TOTAL	.260 K/Ft.

Assumed Live Load = HS 20-44

DETAIL "D"
Not to Scale

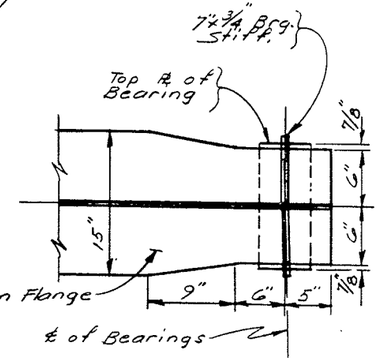

BOTTOM FLANGE TAPER
Not to Scale

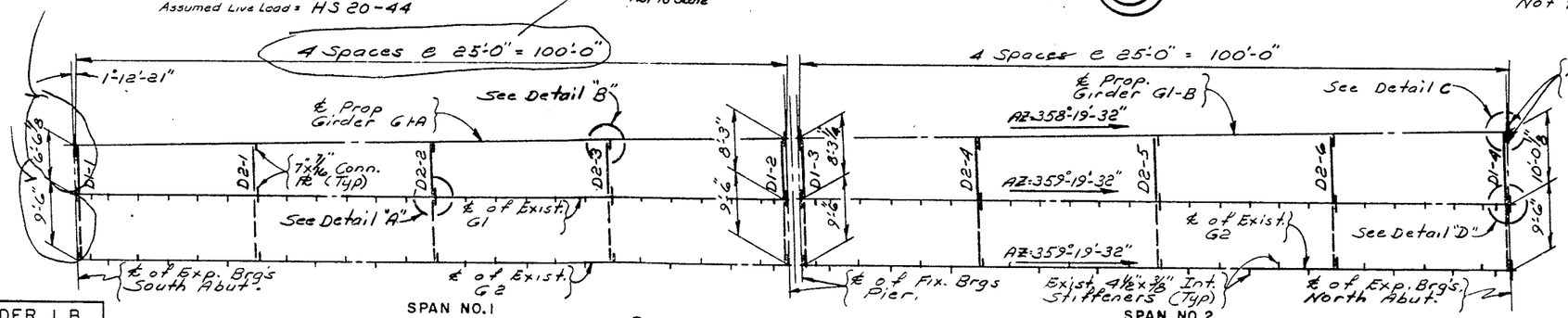

FRAMING PLAN
Not to Scale

	GIRDER 1A			GIRDER 1B		
	℄ BRG.	MID. PT.	℄ BRG.	℄ BRG.	MID. PT.	℄ BRG.
Bottom of Slab Elevation	440.51	440.61	440.63	440.63	440.56	440.41
Steel Elev. (Field Measure)						
D + S.D.L. Deflection	0	0.17 Ft	0	0	0.17 Ft	0
Haunch req'd (C) + (D) (Ft.)						

Dead Load
Superimposed Dead Load
Live Load
Load moments and shears
ude impact.
ents are expressed as
kips
ors are expressed as kips.

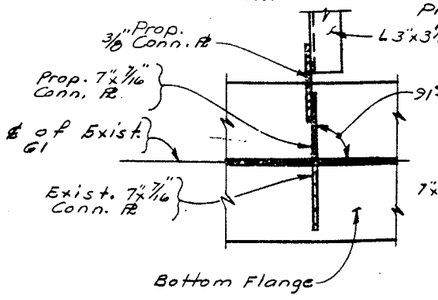

DETAIL "A"
Not to Scale

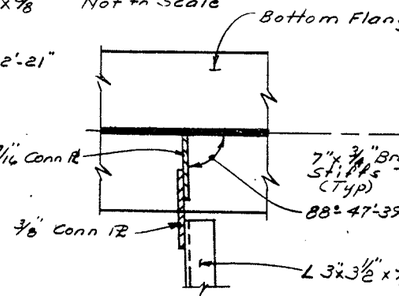

DETAIL "B"
Not to Scale

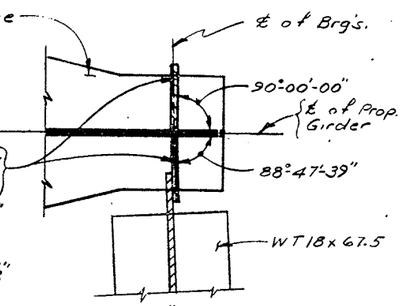

DETAIL "C"
Not to Scale

Notes
The ends of all girders and the bearing stiffeners shall be vertical. All connection plates may be perpendicular to the top flange for stud shear connector details see Dwg. No. 19.

All girder flanges and webs shall be ASTM A-572. All other detail steel shall be ASTM A-36.

All structural steel shall be paid for under Item 11.0504.

The structural steel shall be cleaned and primed under Item 570.0101.

The final 2 coats of paint shall be paid for under Item 570.0201.

STATE OF NEW YORK
DEPARTMENT OF TRANSPORTATION
DIVISION OF CONSTRUCTION

SOUTHBOUND I-481 OVER
N.Y.S. THRUWAY

SUPERSTRUCTURE (PROPOSED) (4 OF 4)

D258367

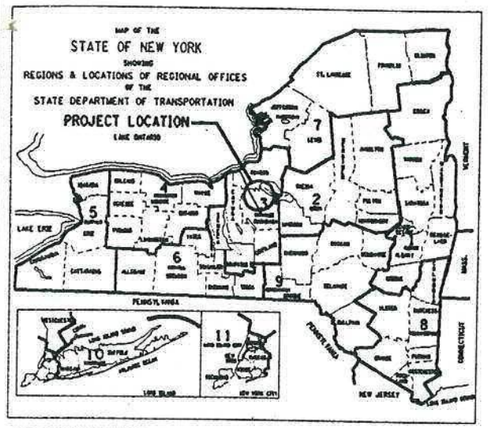

PROJECT DESCRIPTION

THIS IS A BRIDGE DECK OVERLAY PROJECT FOR 11 BRIDGES. THE BRIDGES ARE LOCATED ON I-81, IN OSWEGO AND ONONDAGA COUNTIES AND I-481 AND I-690 IN ONONDAGA COUNTY
BEGINNING REFERENCE MARKER 811-3303-3122
ENDING REFERENCE MARKER 811-3404-1002
BEGINNING REFERENCE MARKER 4811-3301-2088
ENDING REFERENCE MARKER 4811-3301-2089
BEGINNING REFERENCE MARKER 6901-3301-4014
ENDING REFERENCE MARKER 6901-3301-2040

CONTRACTOR'S NAME_____

AWARD DATE_____

COMPLETION DATE_____

FINAL ACCEPTANCE DATE_____

REGIONAL DIRECTOR_____

ENGINEER IN CHARGE_____

FINAL COST TOTAL_____

FISCAL SHARE COST(S)

ESTIMATED BY Douglas R. Smith DRAFTED BY Kurt J. Lang CHECKED BY Douglas R. Smith
DESIGNED BY Douglas R. Smith CHECKED BY Nick DeLeo
PLS FILE = d:\projects\d258367\plans\d258367.pln
DATE/TIME = 06-DEC-1999 13:41
USER = dksmith
PROJ. MANAGER Nick DeLeo
DESIGN SUPERVISOR Douglas R. Smith

STATE OF NEW YORK
DEPARTMENT OF TRANSPORTATION
OFFICE OF ENGINEERING

33 - 1093682

D258367

I 481 NB / 90 I X

MONO-DECK & JOINTS
ABUTMENT BEARINGS & PEDS

INTERSTATE BRIDGE DECK OVERLAY PROJECT
VARIOUS BRIDGES ON I-690, I-81 AND I-481

ONONDAGA AND OSWEGO COUNTIES

355 SHEETS

CONTRACT D258367

F.A. PROJECT Q05-3804-206

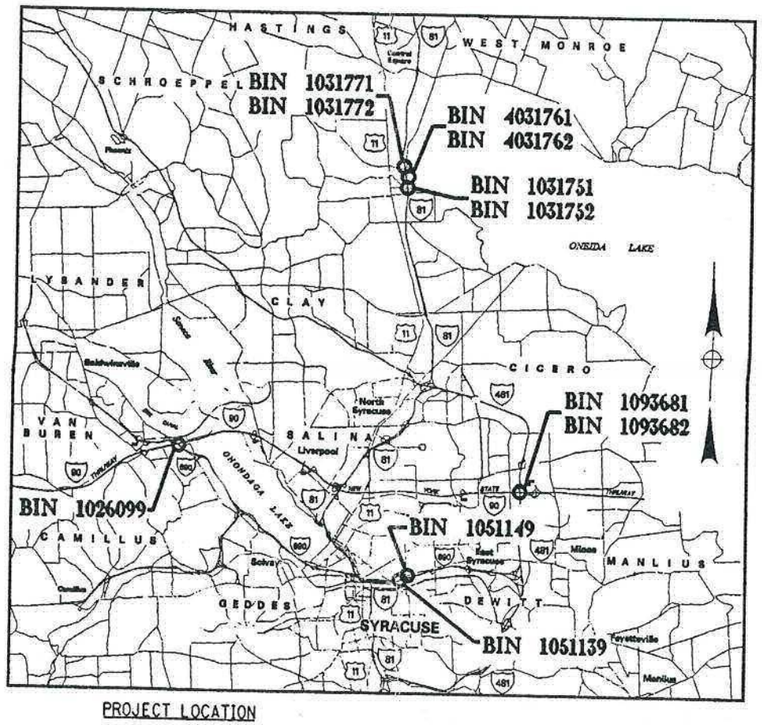

PROJECT LOCATION
NOT TO SCALE

STANDARD SHEETS

M203-1, M203-2, M403-1, M502-2, M502-7, M606-3, M606-5, M606-15R1, M607-2, M607-10, M607-12, M611-1, M619-3R1, M619-4, M619-5, M670-1, M670-2, M670-3R1

Douglas R. Hilbert 11/16/10
Bruce Gallo 11/3/04
Gary Cook 11/28/06
Bruce Gallo 11/19/08
D.J. Hann 11/18/10
Bruce Gallo 11/8/2010

ALL WORK CONTEMPLATED UNDER THIS CONTRACT IS TO BE COVERED BY AND IN CONFORMITY WITH THE STANDARD SPECIFICATIONS (METRIC UNITS) OF JANUARY 2, 1995, AS AMENDED BY ADDENDA NOS. 1 AND 2, EXCEPT AS MODIFIED ON THESE PLANS AND IN THE ITEMIZED PROPOSAL.

US DEPARTMENT OF TRANSPORTATION
FEDERAL HIGHWAY ADMINISTRATION
APPROVED _____ 19___

DIVISION ADMINISTRATOR

RECOMMENDED BY Edward E. Wilday 12/8/99
for REGIONAL DESIGN ENGINEER DATE
D258367

RECOMMENDED BY John E. Patterson 12-8-99
REGIONAL CONSTRUCTION ENGINEER DATE
FOR

RECOMMENDED BY Peter Hampton 12/8/99
REGIONAL TRANSPORTATION MAINTENANCE ENGINEER DATE

RECOMMENDED BY [signature] 12-7-99
REGIONAL TRAFFIC ENGINEER DATE

APPROVED BY Jon P. Edinger 12/7/99
REGIONAL DIRECTOR DATE

BRIDGE DECK OVERLAY PROJECT			
VARIOUS BRIDGES			
I-690, I-81 AND I-481			
ONONDAGA AND OSWEGO COUNTIES			
FED. ROAD REG. NO.	STATE	SHEET NO.	TOTAL SHEETS
1	N.Y.	1	354
FEDERAL AID PROJECT NO.	Q05-3804-206		
CAPITAL PROJECT IDENTIFICATION NO.	3804.06.311		

INDEX ON SHEET NO. 2

D258367

FED ROAD REG. NO.	STATE	CONTRACT NO.	SHEET NO.	TOTAL SHEETS
1	N.Y.	D258367	129	354

INTERSTATE BRIDGE DECK OVERLAY PROJECT
VARIOUS BRIDGES ON I-690, I-81 AND I-481
ONONDAGA AND OSWEGO COUNTIES

P.I.N. 3804.06 | B.I.N. ALL BINS

BRIDGE JOINT TABLE

B.I.N. NUMBER	JOINT LOCATION	JOINT SKEW	SPAN(S) LENGTH FOR JOINT	JOINT BEND LOCAT'N LT	JOINT BEND LOCAT'N RT	EXIST. JOINT TYPE	PROPOSED JOINT TYPE	CURB TO CURB DISTANCE (SEE NOTES)	FASCIA/ MEDIAN LENGTH	TOTAL LENGTH	ITEM NUMBER	DRAWING NUMBER PLAN VIEW	DRAWING NUMBER SECT VIEW	DRAWING NUMBER FASCIA DETAIL
BIN 1051149	W. ABUT	17°-04'-55"	———	CRB	CRB	ACF	A-1 MAC	15.63m	.56m	16.19m	567.31M	FB-3	FB-3	FB-4
(WESTBOUND)	E. ABUT	17°-04'-55"	23.62m	CRB	CRB	ACX	A-4 MAC	15.63m	.56m	16.19m	567.34M	FB-3	FB-3	FB-4
	LONGITUDINAL	———	———	——	——	CS	CS	•• 25.51m	——	25.51m	16567.64M	FB-3	FB-4	——
BIN 1093681	S. ABUT	0°-00'-00"	30.63m	N	N	ACX	A-5 MAC	14.48m	.92m	15.40m	567.35M	GB-4	GB-5	GB-6
	PIER 1	0°-00'-00"	———	N	N	ACF	A-1 MAC	15.02m	.92m	15.94m	567.31M	GB-3	GB-5	GB-6
	N. ABUT	0°-00'-00"	30.63m	N	N	ACX	A-5 MAC	15.55m	.92m	16.47m	567.35M	GB-4	GB-5	GB-6
BIN 1093682	S. ABUT	0°-00'-00"	30.63m	N	N	ACX	A-5 MAC	12.50m	.92m	13.42m	567.35M	GB-4	GB-5	GB-6
	PIER 1	0°-00'-00"	———	N	N	ACF	A-1 MAC	12.50m	.92m	13.42m	567.31M	GB-3	GB-5	GB-6
	N. ABUT	0°-00'-00"	30.63m	N	N	ACX	A-5 MAC	12.50m	.92m	13.42m	567.35M	GB-4	GB-5	GB-6
BIN 4031761	S. ABUT	0°-00'-00"	23.95m	N	N	ACX	A-3 MAC	12.20m	1.52m	13.72m	567.33M	CB-4	CB-5	CB-5
	N. ABUT	0°-00'-00"	121.49m	N	N	MOD1	MOD-1	12.20m	1.52m	13.72m	566.01M	CB-4	CB-6	CB-5
BIN 4031762	S. ABUT	0°-00'-00"	23.95m	N	N	ACX	A-3 MAC	12.20m	1.52m	13.72m	567.33M	CB-4	CB-5	CB-5
	N. ABUT	0°-00'-00"	121.49m	N	N	MOD1	MOD-1	12.20m	1.52m	13.72m	566.01M	CB-4	CB-6	CB-5

LEGEND

EXISTING JOINT TYPE

ACF = ARMORED COMPRESSION-FIXED
ACX = ARMORED COMPRESSSION-EXPANSION
MOD1 = ONE-CELL MODULAR
CS = COMPRESSION SEAL JOINT

PROPOSED JOINT TYPE

A-'X' MAC = MODIFIED ARMORED COMP. SEAL-TYPE 1

MOD-1 = ONE CELL MODULAR JT.

CS = COMPRESSION SEAL

ITEM 16567.64M - REPLACE COMP. SEAL IN EXISTING BRIDGE JOINT.

JOINT BEND LOCATION

N = NO BENDS
CRB = CURB LINE
PAR = PARAPET
PAV'T = PAVEMENT

NOTES:

1. ALL MEASUREMENTS SHALL BE VERIFIED IN THE FIELD BY THE CONTRACTOR.
2. CURB TO CURB LENGTHS ARE MEASURED ALONG THE ℄ OF THE JOINT.
3. ALL DIMENSIONS AND SIDE REFERENCES ARE SHOWN LOOKING UP-STATION.
4. FOR GENERAL JOINT NOTES AND DETAILS, REFER TO THE JOINT DETAILS ON DWG. JT-1.
5. ALL DIMENSIONS ARE SHOWN IN METERS.

• THESE COMPRESSION SEALS EXTEND ONLY AS FAR AS THE COVER WALL.

•• THESE DIMENSIONS ARE ALONG THE CURB OR MEDIAN FACE.

ALL DIMENSIONS ARE IN m UNLESS OTHERWISE NOTED

AS BUILT REVISIONS

SIGNATURE _____ DATE _____

BRIDGE JOINT TABLE
SHEET 2 OF 2

STATE OF NEW YORK
DEPARTMENT OF TRANSPORTATION

FILENAME	REGION	DATE	DRAWING NO.
380406JB.L1A	3	12/99	JT-2

DESIGN SUPERVISOR ____ JOB MANAGER ____ DESIGNED BY ____ ESTIMATED BY ____ DRAFTED BY ____ CHECKED BY ____ CHECKED BY ____

USER = gshubo

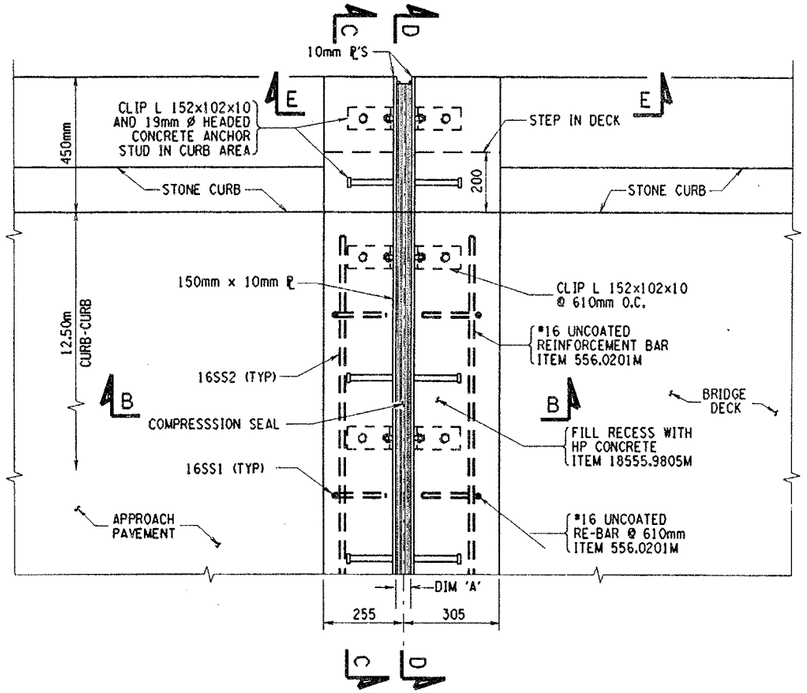

DIRECTION OF TRAFFIC

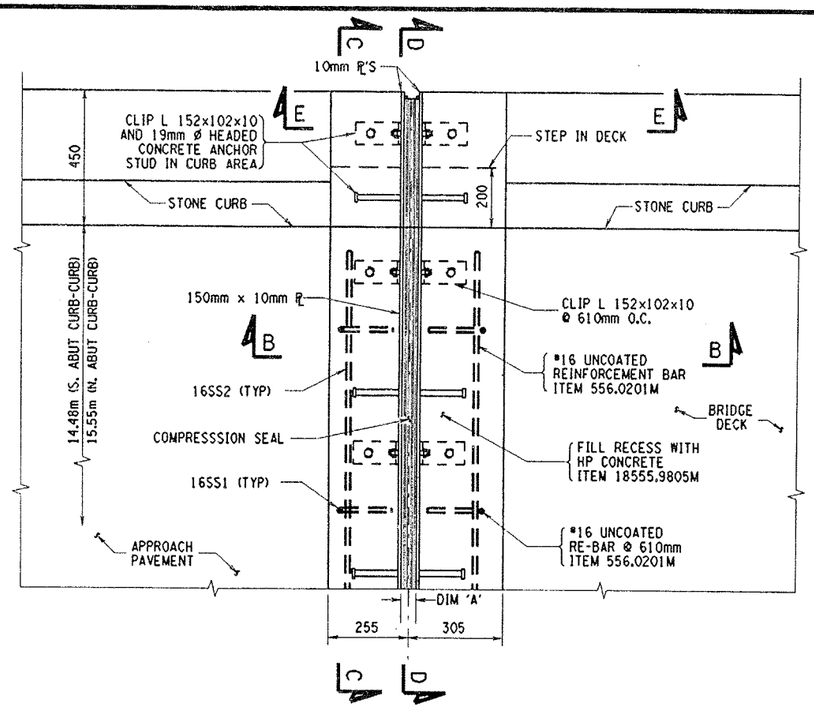

DIRECTION OF TRAFFIC

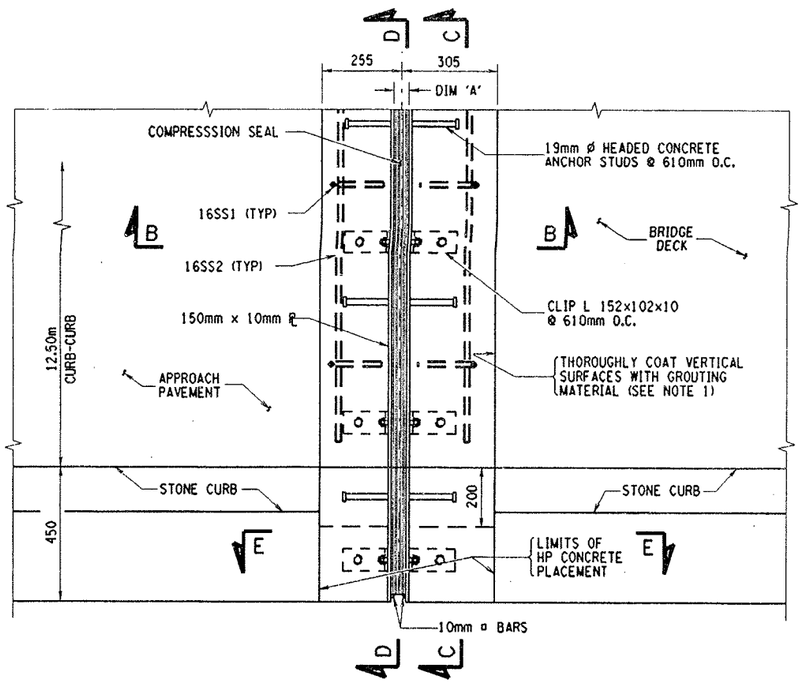

PROPOSED ABUTMENT JOINT PLAN VIEW
BIN 1093682 - BOTH ABUTS
S. ABUT SHOWN, N. ABUT OPPPOSITE
SCALE: 1 TO 10

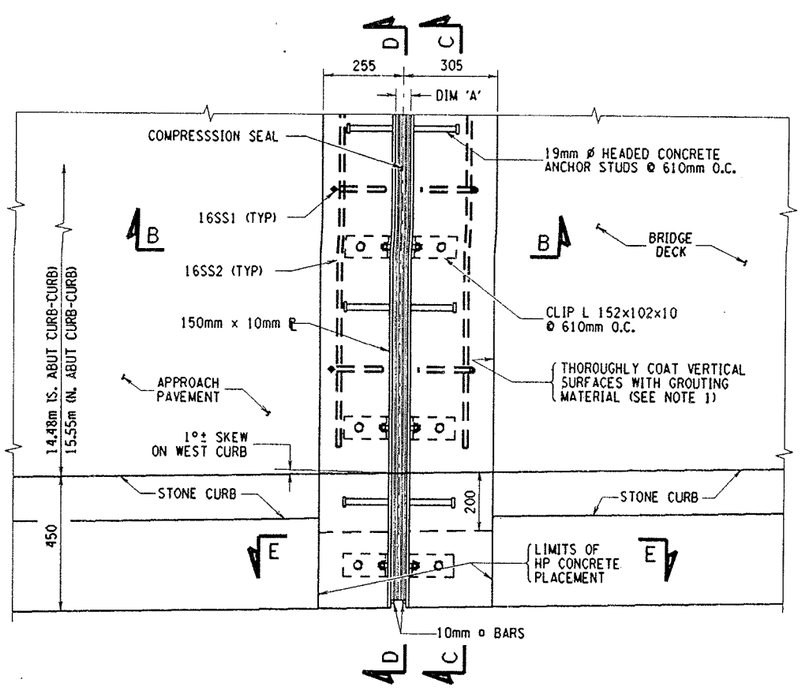

PROPOSED ABUTMENT JOINT PLAN VIEW
BIN 1093681 - BOTH ABUTS
S. ABUT SHOWN, N. ABUT OPPPOSITE
SCALE: 1 TO 10

FED ROAD REG. NO.	STATE	CONTRACT NO.	SHEET NO.	TOTAL SHEETS
1	N.Y.	D258367	114	354

INTERSTATE BRIDGE DECK OVERLAY PROJECT
VARIOUS BRIDGES ON I-690, I-81 AND I-481
ONONDAGA AND OSWEGO COUNTIES

P.I.N. 3804.06 | B.I.N. 1093681 & 2

NOTES:

1. THOROUGHLY COAT THE BOTTOM AND VERTICAL SURFACES OF THE RECESS WITH MATERIAL SPEC. 721-03, EPOXY POLYSULFIDE GROUT, OR MATERIAL SPEC. 705-22, PORTLAND CEMENT MORTAR BONDING GROUT. THE COST OF FURNISHING AND PLACING THE MATERIAL SHALL BE INCLUDED IN THE PRICE BID FOR ITEM 18555.9805M.
2. SECTION B-B IS LOCATED ON DWG. GB-5.
3. SECTIONS C-C, D-D AND E-E ARE LOCATED ON DWG. GB-6
4. FOR GENERAL MAC JOINT DETAILS, SEE DWG. JT-3.
5. FOR PROPOSED MAC JOINT SIZE AND ITEM NUMBER FOR EACH JOINT, SEE JOINT TABLE ON DWGS. JT- 1-2.
6. FOR DETAILS OF THE PIER JOINTS, SEE DWG. GB-3.

ALL DIMENSIONS ARE IN mm UNLESS OTHERWISE NOTED

AS BUILT REVISIONS

SIGNATURE _____ DATE _____

I-481 OVER I-90

PROPOSED ABUTMENT JOINT PLAN VIEWS

STATE OF NEW YORK
DEPARTMENT OF TRANSPORTATION

FILENAME	REGION	DATE	DRAWING NO.
380406GBJ1A	3	12/99	GB-4

DESIGN SUPERVISOR _____ JOB MANAGER _____ DESIGNED BY _____ ESTIMATED BY _____ DRAFTED BY _____ CHECKED BY _____ CHECKED BY _____

FED ROAD REG. NO.	STATE	CONTRACT NO.	SHEET NO.	TOTAL SHEETS
1	N.Y.	D258367	115	354

INTERSTATE BRIDGE DECK OVERLAY PROJECT

VARIOUS BRIDGES ON I-690, I-81 AND I-481

ONONDAGA AND OSWEGO COUNTIES

P.I.N. 3804.06 | B.I.N. 1093681 & 2

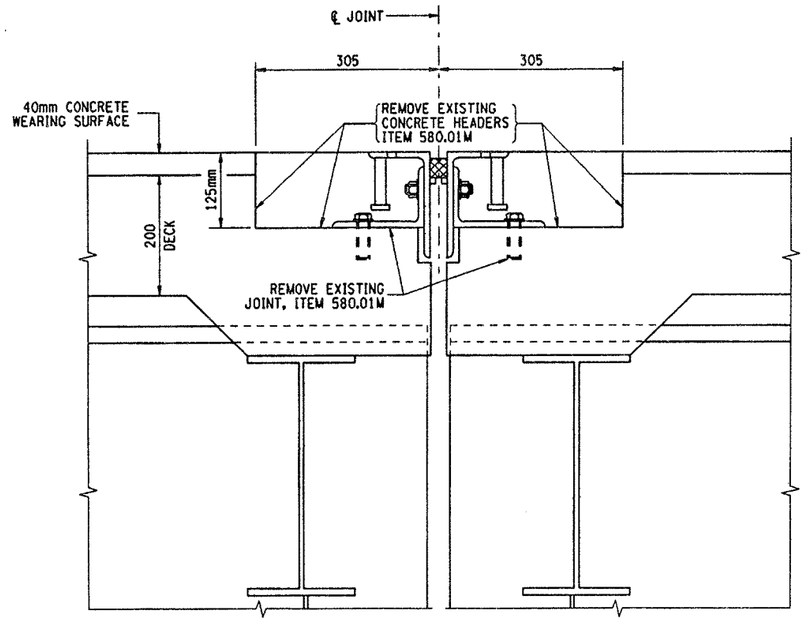

EXISTING SECTION A-A
BIN 1093681 - PIER 1
BIN 1093682 - PIER 2
SCALE: 1 TO 5

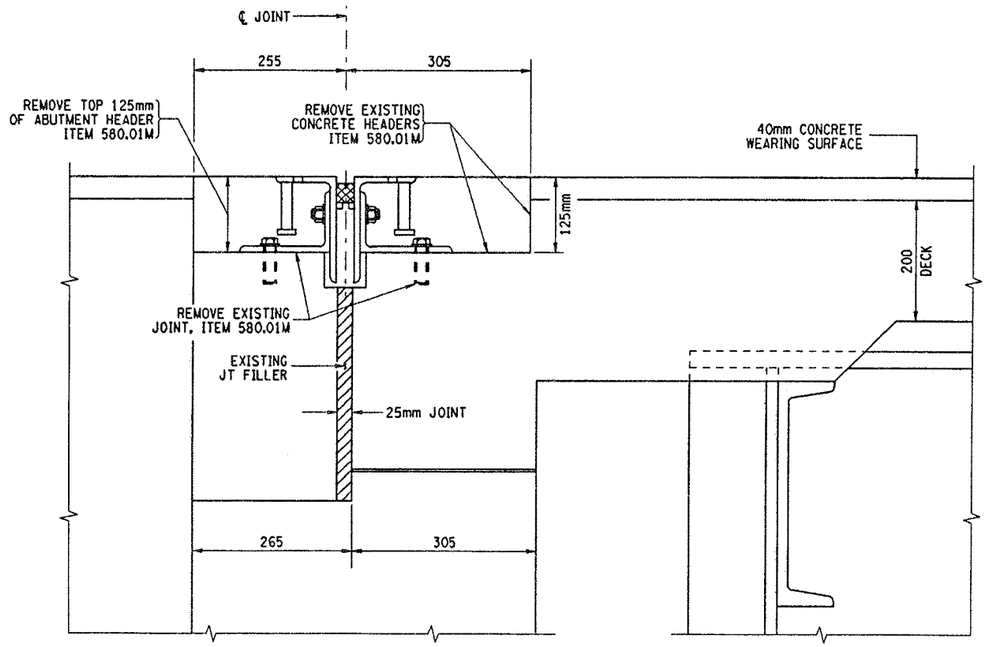

EXISTING SECTION B-B
BIN 1093681 - BOTH ABUTS
BIN 1093682 - BOTH ABUTS
SCALE: 1 TO 5

NOTES:

1. THOROUGHLY COAT THE BOTTOM AND VERTICAL SURFACES OF THE RECESS WITH MATERIAL SPEC. 721-03, EPOXY POLYSULFIDE GROUT, OR MATERIAL SPEC. 705-22, PORTLAND CEMENT MORTAR BONDING GROUT. THE COST OF FURNISHING AND PLACING THE MATERIAL SHALL BE INCLUDED IN THE PRICE BID FOR ITEM 18555.9805M.
2. SEE DWG. GB-4 FOR LOCATION OF SECTIONS A-A AND B-B.
3. FOR GENERAL MAC JOINT DETAILS SEE DWG. JT-3.
4. FOR PROPOSED MAC JOINT SIZE AND ITEM NUMBER FOR EACH JOINT, SEE JOINT TABLE ON DWGS. JT- 1-2.

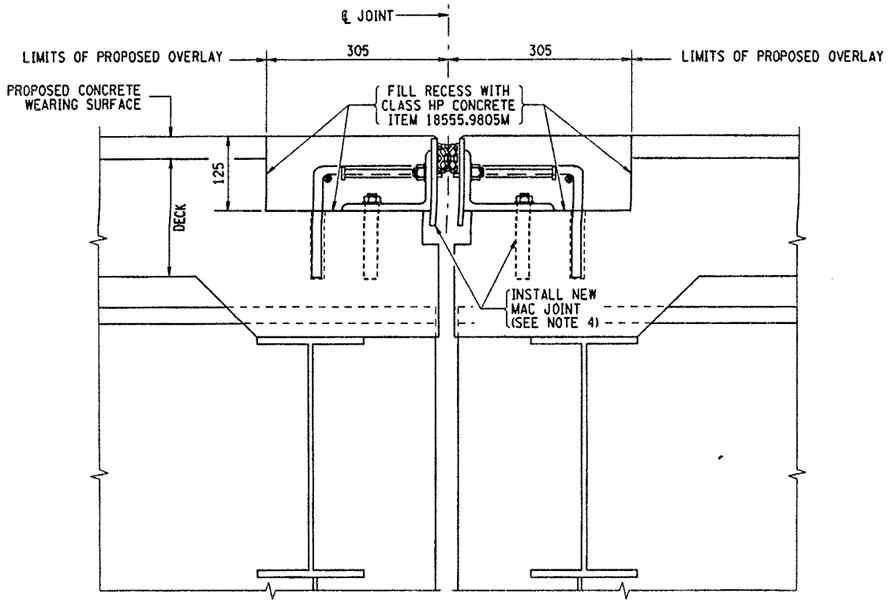

PROPOSED SECTION A-A
BIN 1093681 - PIER 1
BIN 1093682 - PIER 2
SCALE: 1 TO 5

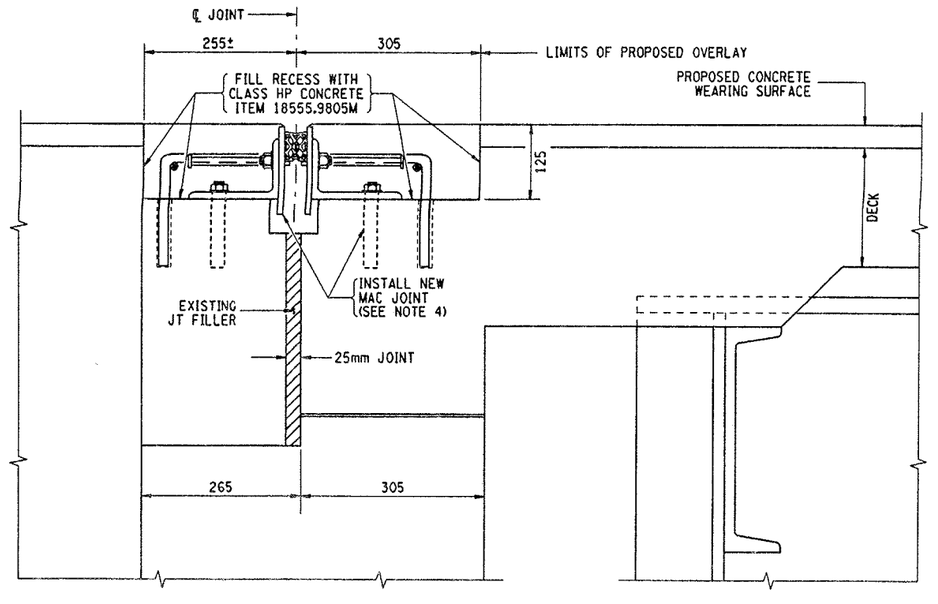

PROPOSED SECTION B-B
BIN 1093681 - BOTH ABUTS
BIN 1093682 - BOTH ABUTS
SCALE: 1 TO 5

ALL DIMENSIONS ARE IN mm UNLESS OTHERWISE NOTED

AS BUILT REVISIONS

SIGNATURE DATE

I-481 OVER I-90

EXISTING AND PROPOSED CROSS SECTIONS

STATE OF NEW YORK
DEPARTMENT OF TRANSPORTATION

FILENAME	REGION	DATE	DRAWING NO.
380406GB.J1A	3	1/00	GB-5

DESIGN SUPERVISOR ____ JOB MANAGER ____ DESIGNED BY ____ DRAFTED BY ____ ESTIMATED BY ____ CHECKED BY ____ CHECKED BY ____

USER = IGNSUSERNAME

FED ROAD REG. NO.	STATE	CONTRACT NO.	SHEET NO.	TOTAL SHEETS
1	N.Y.	D258367	116	354
INTERSTATE BRIDGE DECK OVERLAY PROJECT				
VARIOUS BRIDGES ON I-690, I-81 AND I-481				
ONONDAGA AND OSWEGO COUNTIES				
P.I.N. 3804.06		B.I.N. 1093681 & 2		

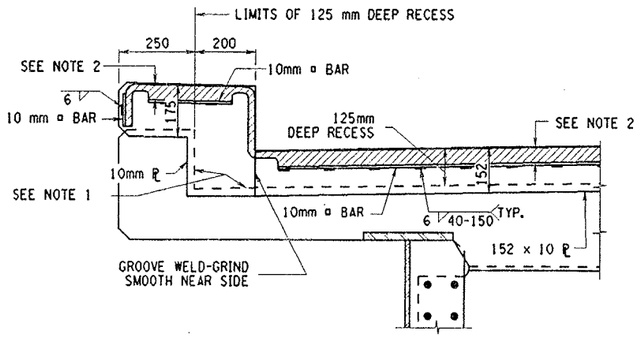

PROPOSED SECTION C-C
SCALE: 1 TO 10

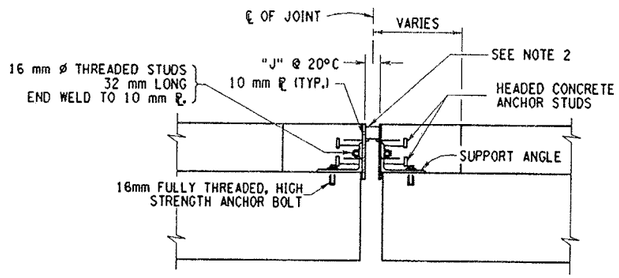

NOTE:
REINFORCEMENT NOT SHOWN

PROPOSED SECTION E-E
SCALE: 1 TO 10

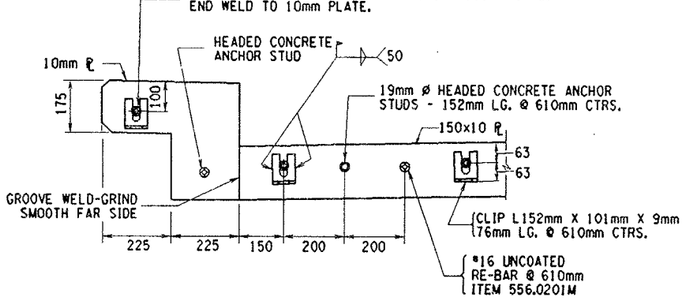

PROPOSED SECTION D-D
(ONLY THE STEEL SHOWN)
SCALE: 1 TO 10

NOTES:

1. THOROUGHLY COAT THE BOTTOM AND VERTICAL SURFACES OF THE RECESS WITH MATERIAL SPEC. 721-03, EPOXY POLYSULFIDE GROUT, OR MATERIAL SPEC. 705-22, PORTLAND CEMENT MORTAR BONDING GROUT. THE COST OF FURNISHING AND PLACING THE MATERIAL SHALL BE INCLUDED IN THE PRICE BID FOR ITEM 18555.9805M.
2. THIS DEPTH SHALL BE INDICATED ON THE SHOP DRAWINGS AND SHALL BE SUCH THAT WHEN THE SEAL IS COMPRESSED TO 50% OF ITS NORMAL WIDTH, THE TOP OF THE SEAL SHALL BE NOT LESS THAN 6mm NOR MORE THAN 19mm BELOW THE TOP OF THE ROADWAY.
3. FOR LOCATIONS OF SECTIONS C-C, D-D AND E-E, SEE DWG. GB-3,4.
4. FOR GENERAL MAC JOINT DETAILS, SEE DWG. JT-3.
5. FOR PROPOSED MAC JOINT SIZE AND ITEM NUMBER FOR EACH JOINT, SEE JOINT TABLE ON DWGS. JT- 1-2.

ALL DIMENSIONS ARE IN mm UNLESS OTHERWISE NOTED

AS BUILT REVISIONS

SIGNATURE _____ DATE _____

I-481 OVER I-90

PROPOSED JOINT DETAILS FASCIA SECTIONS

STATE OF NEW YORK
DEPARTMENT OF TRANSPORTATION

FILENAME	REGION	DATE	DRAWING NO.
380406GB.J1A	3	12/99	GB-6

DESIGN SUPERVISOR _____ JOB MANAGER _____ DESIGNED BY _____ DRAFTED BY _____ ESTIMATED BY _____ CHECKED BY _____

BIN: 1093682
I481 NB / I90

DECK DETERIORATION PLAN

NOT TO SCALE

N

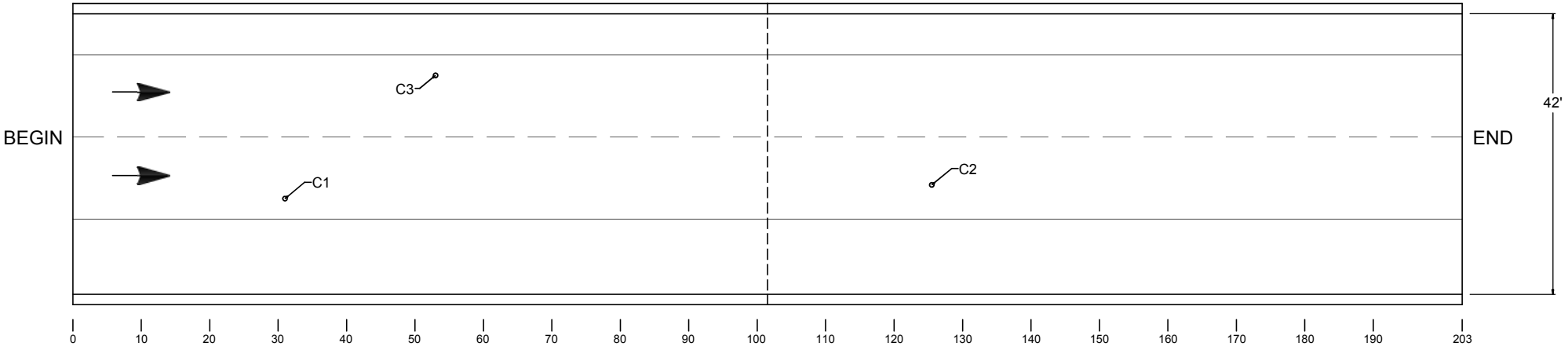

SPAN 1

SPAN 2

TOTAL DAMAGED AREA EQUALS 0.0 SF.

LEGEND

- Hollow Concrete
- Patch
- Coring location
- Crack

BIN: 1093682
I481 NB / I90

END ABUTMENT DETERIORATION SKETCH

NOT TO SCALE

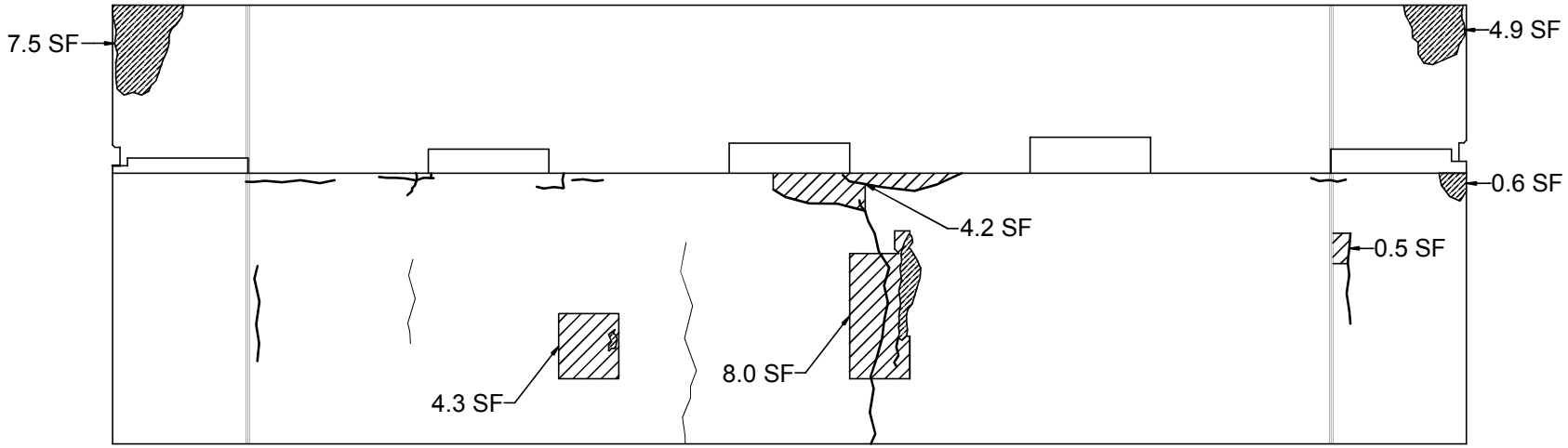

ELEVATION

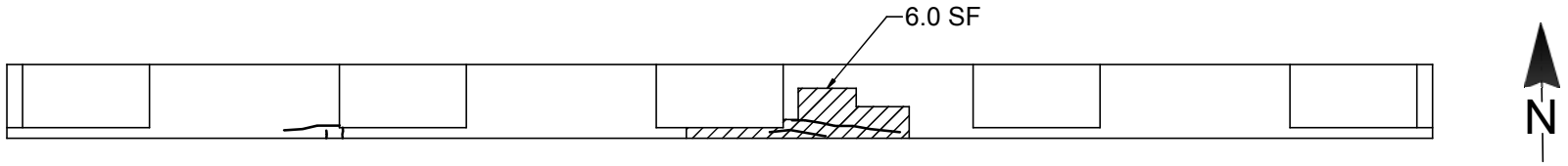

PLAN

LEGEND

- Hollow Concrete
- Spall
- Crack
- Hairline Crack

IN-DEPTH PHOTO DOCUMENTATION

BIN: 1093682
I481 NB / I90

IN-DEPTH INSPECTION
PHOTO LOCATION PLAN

N

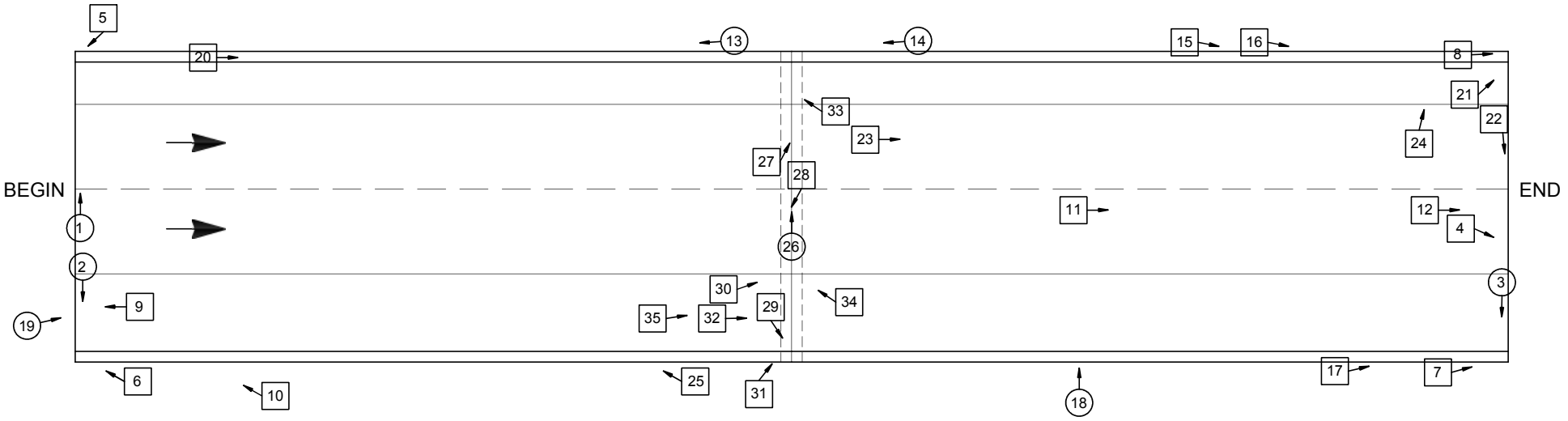

SPAN 1

SPAN 2

LEGEND	
(XX)	Photo Above Deck
[XX]	Photo Below Deck

In-Depth Inspection Photos

I481 over I90, BIN 1093682



DESCRIPTION: BEGIN JOINT NEAR CENTERLINE (R-L)

PHOTO 1



DESCRIPTION: BEGIN HEADER FROM RIGHT SHOULDER (L-R)

PHOTO 2



DESCRIPTION: END HEADER FROM RIGHT SHOULDER (L-R)

PHOTO 3



DESCRIPTION: END SEAT BAY 3

PHOTO 4



DESCRIPTION: BEGIN BACKWALL LEFT

PHOTO 5



DESCRIPTION: BEGIN BACKWALL RIGHT

PHOTO 6

In-Depth Inspection Photos

I481 over I90, BIN 1093682



DESCRIPTION: END BACKWALL RIGHT

PHOTO 7



DESCRIPTION: END BACKWALL LEFT

PHOTO 8



DESCRIPTION: BEGIN STEM UNDER BAY 4

PHOTO 9



DESCRIPTION: BEGIN ABUTMENT

PHOTO 10

In-Depth Inspection Photos

I481 over I90, BIN 1093682



DESCRIPTION: END ABUTMENT

PHOTO 11



DESCRIPTION: END STEM UNDER PEDESTAL 3

PHOTO 12



DESCRIPTION: SPAN 1 LEFT FASCIA (E-B)

PHOTO 13



DESCRIPTION: SPAN 2 LEFT FASCIA AT BEGIN (E-B)

PHOTO 14



DESCRIPTION: SPAN 2 LEFT FASCIA NEAR SNOW FENCE POST 6

PHOTO 15



DESCRIPTION: SPAN 2 LEFT FASCIA NEAR SNOW FENCE POST 7

PHOTO 16

In-Depth Inspection Photos

I481 over I90, BIN 1093682



DESCRIPTION: SPAN 2 RIGHT FASCIA NEAR END

PHOTO 17



DESCRIPTION: SPAN 2 RIGHT SNOW FENCE POST 4

PHOTO 18



DESCRIPTION: DECK FROM BEGIN RIGHT

PHOTO 19



DESCRIPTION: SPAN 1 LEFT OVERHANG

PHOTO 20

In-Depth Inspection Photos

I481 over I90, BIN 1093682



DESCRIPTION: END BACKWALL AT LEFT

PHOTO 21



DESCRIPTION: END BACKWALL FROM BAY 1 (L-R)

PHOTO 22

In-Depth Inspection Photos

I481 over I90, BIN 1093682



DESCRIPTION: SPAN 2 BAYS 1 & 2 (B-E)

PHOTO 23



DESCRIPTION: SPAN 2 BAY 1 AT END (R-L)

PHOTO 24

In-Depth Inspection Photos

I481 over I90, BIN 1093682



DESCRIPTION: SPAN 1 FRAMING FROM END

PHOTO 25



DESCRIPTION: PIER JOINT NEAR CENTERLINE (R-L)

PHOTO 26



DESCRIPTION: PIER BEARING 2 END ROW FROM RIGHT

PHOTO 27



DESCRIPTION: PIER BEARING 3 END ROW FROM LEFT

PHOTO 28



DESCRIPTION: PIER BEARING 5 BEGIN ROW FROM LEFT

PHOTO 29



DESCRIPTION: PIER PEDESTAL 4 AND CAP BEAM BEGIN

PHOTO 30



DESCRIPTION: PIER PEDESTAL 5 BEGIN

PHOTO 31



DESCRIPTION: PIER CAP BEAM BAY 4 BEGIN

PHOTO 32



DESCRIPTION: PIER CAP BEAM BAY 1 END

PHOTO 33



DESCRIPTION: PIER CAP BEAM UNDER PEDESTAL 4 END

PHOTO 34

In-Depth Inspection Photos

I481 over I90, BIN 1093682



DESCRIPTION: PIER RIGHT COLUMN BEGIN

PHOTO 35

DESCRIPTION:

PHOTO

ASBESTOS SAMPLING SURVEY

LATEST BIENNIAL INSPECTION REPORT

Inspection Date: 10/18/2012 RC: 33 BIN: 1093682

Bridge Ratings

Carried: 481I 481I33012088 Crossed: 90I X CheckValue: 1,810,645,070

Inspection Agency: 10 - NYSDOT Type of Inspection: 1 - BIENNIAL
GTMS: 302 -- Steel - Stringer/Multi-Beam or Girder
POSTINGS: See Gen Rec Page 1 for Postings at time of inspection.
Further Investigation Needed: No
State Highway Number: 70-7 Milepoint: 10.18 AADT/Yr: 13959 / 2002
Orientation: 1 - North Political Unit: 0233 - Town of DEWITT Year Built: 1972
Total Spans: 2 Ramp Bridge Attached To Span: NA BIN: NA
General Recommendation: 5 Computed Condition Rating: 4.625

Abutment Ratings:	Beg Abut	End Abut
Joint with Deck	6	5
Bearings, Bolts, Pads	6	6
Seats and Pedestals	6	5
Backwall	4	4
Stem (Breastwall)	5	4
Erosion or Scour	5	5
Footings	9	9
Piles	8	8
Recommendation	5	5

Wingwall Ratings:	Beg Abut	End Abut
Walls	4	4
Footings	9	9
Erosion or Scour	6	6
Piles	8	8

Channel Ratings:	Channel
Stream Alignment	8
Erosion and Scour	8
Waterway Opening	8
Bank Protection	8

Approach Ratings:	Approaches
Drainage	5
Embankment	3
Settlement	5
Erosion	3
Pavement	5
Guide Railing	6

Number of Flags Issued:

RED: 0 Yellow: 0 Safety: 0

Vulnerability Reviews Recommended: 1=Yes, 2=No, 3=NA, X=NotActive

Hydraulic: 3	Overload: X	Steel: 2
Collision: 2	Concrete: X	Seismic: X

Inspector's Signature: CheckValue: 1,810,645,070 Date: 10/18/2012

Bruce Opalka,PE () (Inspector ID:3000038)

Signed copy of this inspection report is available in the appropriate NYSDOT Regional Office

Reviewed By: Date: 11/26/2012

James R. Manning,PE () (QC ID:3000023)

Signed copy of this inspection report is available in the appropriate NYSDOT Regional Office

Inspection Date: 10/18/2012 RC: 33 BIN: 1093682

Span Ratings

Carried: 481I 481I33012088 Crossed: 90I X CheckValue: 1,810,645,070

Deck Element Ratings:	001	002
Wearing Surface	6	6
Curbs	6	6
Sidewalks, Fascias	5	6
Railings, Parapets	6	6
Scuppers	8	8
Gratings	8	8
Median	8	8
Mono Deck Surface	6	6

Superstructure Ratings:	001	002
Structural Deck	6	4
Primary Members	5	5
Secondary Members	5	5
Paint	2	2
Joints	6	8
Recommendation	5	5

Pier Ratings:	001	002
Bearings, Bolts, Pads	4	8
Pedestals	5	8
Top of Cap or Beam	5	8
Stem Solid Pier	8	8
Cap Beam	5	8
Pier Columns	5	8
Footings	9	8
Erosion or Scour	6	8
Piles	8	8
Recommendation	5	8

Utility Ratings:	001	002
Lighting	8	8
Sign Structure	8	6
Utilities and Support	8	8

Field Notes:

Field Date	Arrival	Departure	Temp (C)	Temp (F)	Weather Conditions
10/16/2012	3:00:00 PM	5:00:00 PM	10	50	P.C.
10/18/2012	9:00:00 AM	11:00:00 AM	16	60	Sunny

Inspection Date: 10/18/2012 RC: 33 BIN: 1093682

Inspection Notes

Carried: 481I 481I33012088 Crossed: 90I X CheckValue: 1,810,645,070

Note ID: 321210936820000

Beg Abut -- Abutment: Backwall -- Rated 4, Was 4
Beg Abut -- Wingwalls: Walls -- Rated 4, Was 4
End Abut -- Abutment: Backwall -- Rated 4, Was 4
End Abut -- Wingwalls: Walls -- Rated 4, Was 4
Referenced Photos: "9", "8", "2", "5", "4"
2012 - At both stems the top corners of the backwall and adjacent portion of the wingwalls are cracked and spalled. The spalling is up to 10" deep and to mid height of backwall.

Note ID: 321210936820002

Approaches: Embankment -- Rated 3, Was 3
Approaches: Erosion -- Rated 3, Was 3
Referenced Photos: "7"
2012 - The begin right embankment has a large erosion gully approx. 10' wide by up to 4' deep. It is approx. 8' back from the rail, but could quickly be a problem with a large storm runoff. A maintenance report was done for this problem 2010.

Note ID: 321210936820003

Approaches: Pavement -- Rated 5, Was 5
Referenced Photos: "6"
2012: Minor cracking along bridge joints allows for '5' rating at this time.

Note ID: 321210936820004

Span 001 -- Superstructure: Paint -- Rated 2, Was 2
Span 002 -- Superstructure: Paint -- Rated 2, Was 2
Referenced Photos: "1"
2012 - The paint system has extensively failed along lower flanges and has failed along the lower 3/4's of the webs, with the remaining paint appearing chalky. Paint system has 40% to 50% loss. The steel primary members are now starting to have rust flakes with section loss approx. less than 5%. This being downrated to a 2 for both spans. Strongly recommend that this structure be painted.

Note ID: 321210936820006

Span 001 -- Pier: Bearings, Bolts, Pads -- Rated 4, Was 4
Referenced Photos: "10", "11"
2012 - The fixed bearings at the pier were not replaced with the begin and end bearing project. They are severely corroded at this time. Two bolts are sheared; bearing #2, span #2, right side and bearing #5, span #1, left side.

Note ID: 321210936820005

Span 002 -- Superstructure: Structural Deck -- Rated 4, Was 6
Referenced Photos: "12", "13", "14", "15"
2012: Deck haunch has cracked across width of bridge at top of haunch

Inspection Notes

Carried: 481I 481I33012088 Crossed: 90I X CheckValue: 1,810,645,070

Note ID: 321210936820005 - continued

resulting in front portions of haunch being dislodged from deck and shifting along top of backwall. Portions behind the first two pedestals have dropped or are about to drop away.

Note ID: 321210936820001

End Abut -- Abutment: Stem (Breastwall) -- Rated 4, Was 4
Referenced Photos: "3"
2012 - The top corners of the seat/stem are cracked horizontally and hollow sounding up to 8" down and back from the corner across the seat. These areas are between peds 1&2, 3&4, 4&5. Between peds 3&4 there is a vertical crack that is spalled and hollow for the full height approx. 1' wide. Other areas of the stem have a few hairline cracks.

Inspection Date: 10/18/2012 RC: 33 BIN: 1093682

Inspection Photos in Photo Number Order

Carried: 481I 481I33012088 Crossed: 90I X CheckValue: 1,810,645,070

Span #2 paint condition, typical of both spans.
Viewed from span #2 end left corner.



Photo Number: 1 Photo Filename: IMG_0410 (Small).jp

End abutment left backwall.
Viewed from span #2 end left.



Photo Number: 2 Photo Filename: IMG_0411 (Small).jp

Inspection Date: 10/18/2012 RC: 33 BIN: 1093682

Inspection Photos in Photo Number Order

Carried: 481I 481I33012088 Crossed: 90I X CheckValue: 1,810,645,070

End abutment stem.
Viewed from span #2 end right corner.



Photo Number: 3 Photo Filename: IMG_0412 (Small).jp

End abutment right wingwall.
Viewed from span #2 end right.



Photo Number: 4 Photo Filename: IMG_0413 (Small).jp

Inspection Date: 10/18/2012 RC: 33 BIN: 1093682

Inspection Photos in Photo Number Order

Carried: 481I 481I33012088 Crossed: 90I X CheckValue: 1,810,645,070

End abutment left corner of backwall and wingwall.
Viewed from span #2 end left corner.



Photo Number: 5 Photo Filename: IMG_0416 (Small).jp

Beginning approach pavement. Typical of end approach pavement.
Viewed from beginning right to left.



Photo Number: 6 Photo Filename: IMG_0417 (Small).jp

Inspection Date: 10/18/2012 RC: 33 BIN: 1093682

Inspection Photos in Photo Number Order

Carried: 481I 481I33012088 Crossed: 90I X CheckValue: 1,810,645,070

Beginning approach right side, erosion gully.
Viewed from beginning right, bottom of slope.



Photo Number: 7 Photo Filename: IMG_0418 (Small).jp

Beginning abutment right wingwall.
Viewed from span #1 beginning right corner.



Photo Number: 8 Photo Filename: IMG_0419 (Small).jp

Inspection Date: 10/18/2012 RC: 33 BIN: 1093682

Inspection Photos in Photo Number Order

Carried: 481I 481I33012088 Crossed: 90I X CheckValue: 1,810,645,070

Beginning abutment left corner of backwall and wingwall.
Viewed from span #1 beginning left corner.



Photo Number: 9 Photo Filename: IMG_0420 (Small).jp

Pier bearing #5, all pier bearings are rusted. Also shows broken anchor bolt, inside span #1 side.
Viewed from span #2 beginning right.



Photo Number: 10 Photo Filename: IMG_0471 (Small).j

Inspection Date: 10/18/2012 RC: 33 BIN: 1093682

Inspection Photos in Photo Number Order

Carried: 481I 481I33012088 Crossed: 90I X CheckValue: 1,810,645,070

Pier bearing #2, broken anchor bolt.
Viewed from span #2 beginning at center looking left.



Photo Number: 11 Photo Filename: IMG_0472 (Small).j

End deck haunch.
Viewed from span #2 end left corner.



Photo Number: 12 Photo Filename: IMG_0477 (Small).j

Inspection Date: 10/18/2012 RC: 33 BIN: 1093682

Inspection Photos in Photo Number Order

Carried: 481I 481I33012088 Crossed: 90I X CheckValue: 1,810,645,070

End deck haunch, left corner broken.
Viewed from span #2 end left corner.



Photo Number: 13 Photo Filename: IMG_0478 (Small).j

End deck haunch.
Viewed from span #2 end right corner.



Photo Number: 14 Photo Filename: IMG_0481 (Small).j

Inspection Date: 10/18/2012 RC: 33 BIN: 1093682

Inspection Photos in Photo Number Order

Carried: 481I 481I33012088 Crossed: 90I X CheckValue: 1,810,645,070

End deck haunch right side.
Viewed from end right corner.

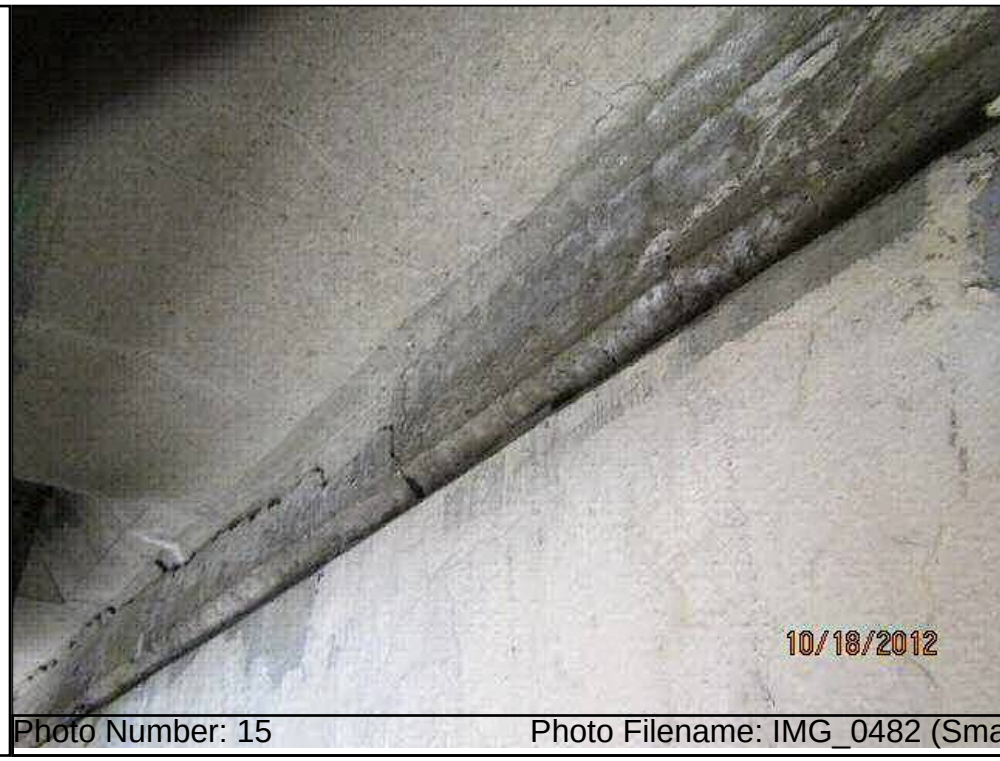

Photo Number: 15 Photo Filename: IMG_0482 (Small).j

No Photo

Inspection Date: 10/18/2012 RC: 33 BIN: 1093682

Inspection Sketches in Sketch SysID Order

Carried: 481I 481I33012088 Crossed: 90I X CheckValue: 1,810,645,070

Sketch ID: 321210936820000 Sketch Filename: LdRatNC.12

General Sketch for Bridge
Referenced Photos:

Region 3 LoadRatingFieldCheckForm

NYSDOT BRIDGE INSPECTION REPORT			
SHEET	1	OF	1

LOAD RATING FIELD CHECK FORM

BIN:	1093682		Insp. Date:	10/16/2012

Dead Load - Note Changes since Last load Rating or state "NONE":

NONE

Section Loss -Note Changes since Last load Rating or state "NONE":

NONE

Additional Notes:

NONE

Attachments:

Team Leader: BRUCE OPALKA

Inspection Date: 10/18/2012 RC: 33 BIN: 1093682

Inspection Sketches in Sketch SysID Order

Carried: 481I 481I33012088 Crossed: 90I X CheckValue: 1,810,645,070

Sketch ID: 321210936820001 Sketch Filename: DeckSketch.12.tif.tif

Span 002 -- Superstructure: Structural Deck -- Rated 4, Was 6
Referenced Photos: "12", "13", "14", "15"

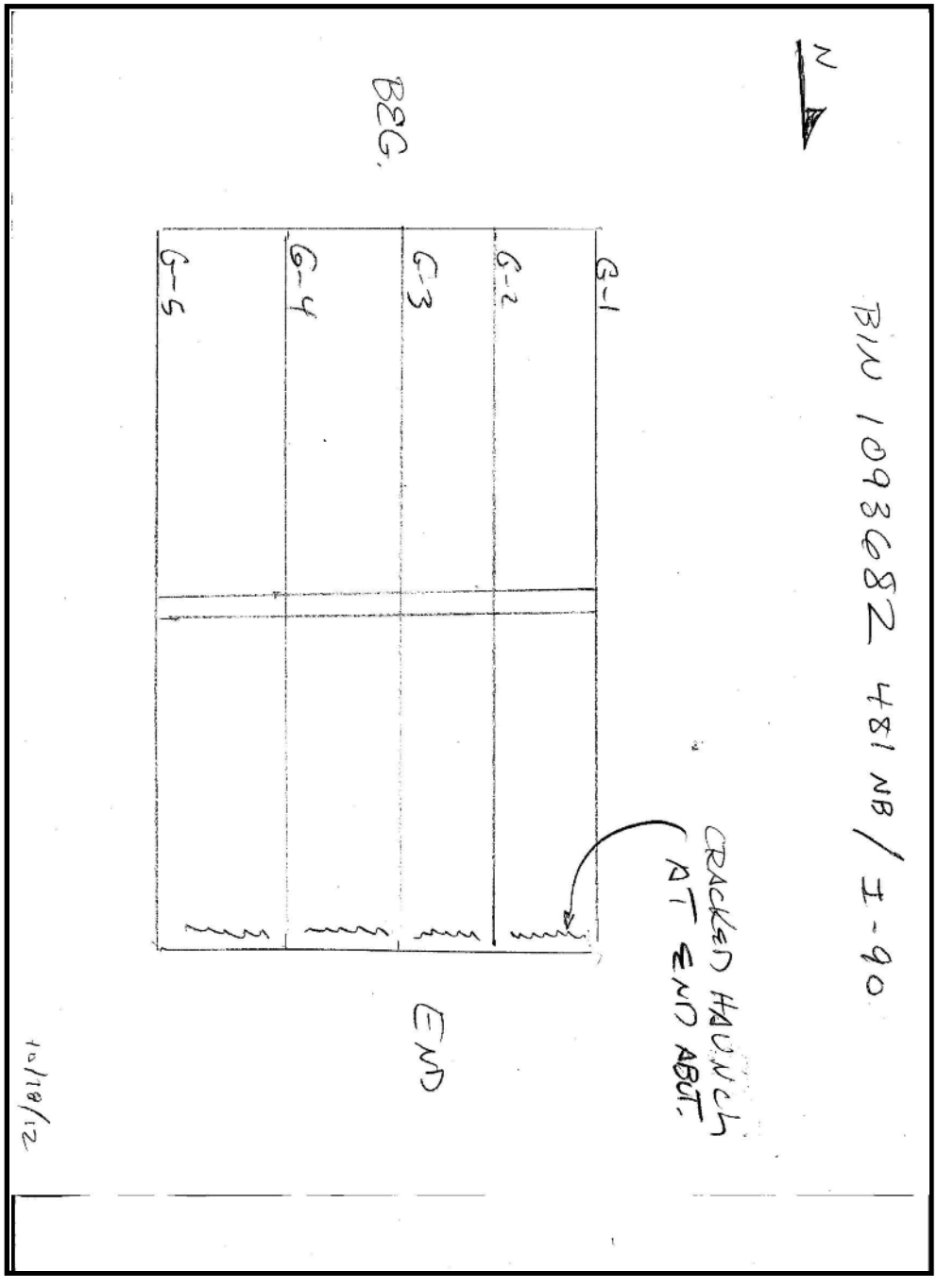

Inspection Date: 10/18/2012 RC: 33 BIN: 1093682

Gen. Rec., Postings, Federal Ratings, etc.

Carried: 481I 481I33012088 Crossed: 90I X CheckValue: 1,810,645,070

Overall Condition:

GENERAL RECOMMENDATION: 5

Computed Condition Rating: 4.625

Problems Requiring Action:

NO Further Investigation Needed

NO Flags Issued

POSTINGS:

Inspector Confirmed existing Posting data as correct.
Posted Vertical Clearance ON the bridge is: No Posting
Posted Vertical Clearance UNDER the bridge is: No Posting
No Load Restriction is posted on this bridge

Overloads Observed:

NO Overload Vehicles were observed on this bridge

FEDERAL RATINGS:

NBI Deck Condition: 5
NBI Superstruct Condition: 6
NBI Substruct Condition: 5
NBI Channel Condition: N
NBI Culvert Condition: N

Diving Inspection Needs:

Diving Inspection Required? No Date of Last Diving Inspection: No Date

Inventory Problems:

Inventory Problems Exist? No

Miscellaneous:

Time Required to Inspect Bridge: 4 Hours

Lane Closure Needs: None Required

No Railroad Flagging Required

No Pedestrian Fence

There is a Snow Fence present

The BIN Plate is in OK condition

Inspection Date: 10/18/2012 RC: 33 BIN: 1093682

Gen. Rec., Postings, Federal Ratings, etc.

Carried: 481I 481I33012088 Crossed: 90I X CheckValue: 1,810,645,070

Special Emphasis Inspection Required:

Non-Redundant/Fracture Critical Members - No
Pin and Hangers - No
Fatigue-Prone Welds - No
Non-Categorized Fatigue-Prone Details - No
Other (Specified in Text) - No

Special Emphasis Details:

No Special Emphasis Inspection Required.

General Notes To the Next Inspector:

10/18/2012 Bucket truck without lane closure used.

Improvements Observed:

Inspection Date: 10/18/2012 RC: 33 BIN: 1093682

Review Progress and Personnel Present at Inspection

Carried: 481I 481I33012088 Crossed: 90I X CheckValue: 1,810,645,070

Inspection Submission Status:

Submitted to QC Engineer on: 10/19/2012
QC Submission Number: 253219

QC Review Completed: 11/26/2012
QC Engineer: James R. Manning

Submitted to Liaison Engineer on: 11/30/2012
Liaison Submission Number: 53239

Liaison Review Completed: 12/12/2012
Liaison Engineer: TODD M. HERMANN

Submitted for BIIS Processing on: 12/12/2012
BIIS Submission Number: .kp1

Current Status: Keypunched, Sent to BIIS
Check Value: 1,810,645,070

Personnel Present During Inspection:

Bruce Opalka - Team Leader
Keith Way - Assistant Team Leader

Inspection Date: 10/18/2012 RC: 33 BIN: 1093682

Inspection Access Requirements

Carried: 481I 481I33012088 Crossed: 90I X CheckValue: 1,810,645,070

Equipment Required for Inspection

No Access Requirement Changes Noted During This Inspection.
This Listing is from the Inventory Database.

ACCESS CATEGORIES FOR ENTIRE BRIDGE
Required: Walking, Extension Ladder, Small Lift, Shadow Vehicle

ACCESS CATEGORIES FOR SPAN 1
Required: Walking, Extension Ladder, Small Lift, Shadow Vehicle

ACCESS CATEGORIES FOR SPAN 2
Required: Walking, Extension Ladder, Small Lift, Shadow Vehicle

Inspection Date: 10/18/2012 RC: 33 BIN: 1093682

Culvert Measurements

Carried: 481I 481I33012088 Crossed: 90I X CheckValue: 1,810,645,070

Culvert Measurements

NO CULVERT DATA FOR BIN 1093682

Standard Photos **RC: 33 BIN: 1093682**

Carried: 481I 481I33012088 Crossed: 90I X

1093682_LOCATION_MAP.JPG

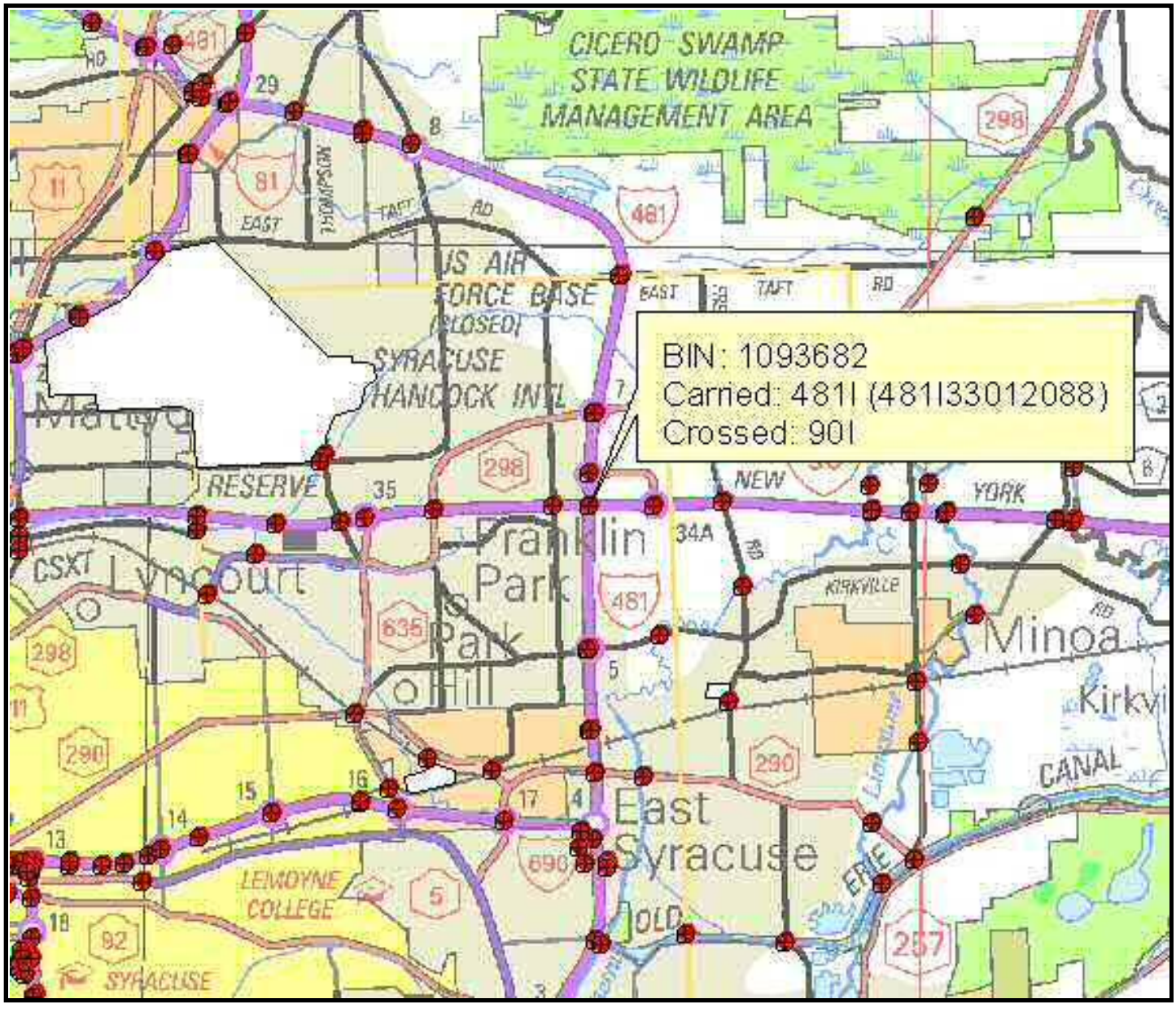

Standard Photos **RC: 33 BIN: 1093682**

Carried: 481I 481I33012088 Crossed: 90I X

Feature Crossed Right.Sp1.12.jpg



Standard Photos **RC: 33 BIN: 1093682**

Carried: 481I 481I33012088 Crossed: 90I X

Feature Crossed Right.Sp2.12.jpg



Abutment Begin.12.jpg



Standard Photos **RC: 33 BIN: 1093682**

Carried: 481I 481I33012088 Crossed: 90I X

Abutment End.12.jpg



Standard Photos **RC: 33 BIN: 1093682**

Carried: 481I 481I33012088 Crossed: 90I X

Approach Begin.12.jpg



Standard Photos **RC: 33 BIN: 1093682**

Carried: 481I 481I33012088 Crossed: 90I X

Approach End.12.jpg



Standard Photos **RC: 33 BIN: 1093682**

Carried: 481I 481I33012088 Crossed: 90I X

Elevation Right.12.jpg



Standard Photos **RC: 33 BIN: 1093682**

Carried: 481I 481I33012088 Crossed: 90I X

Feature Crossed Left.Sp1.12 .jpg



Standard Photos **RC: 33 BIN: 1093682**

Carried: 481I 481I33012088 Crossed: 90I X

Feature Crossed Left.Sp2.12 .jpg



Standard Photos **RC: 33 BIN: 1093682**

Carried: 481I 481I33012088 Crossed: 90I X

Framing View.12.jpg



Standard Photos **RC: 33 BIN: 1093682**

Carried: 481I 481I33012088 Crossed: 90I X

Pier.12.jpg

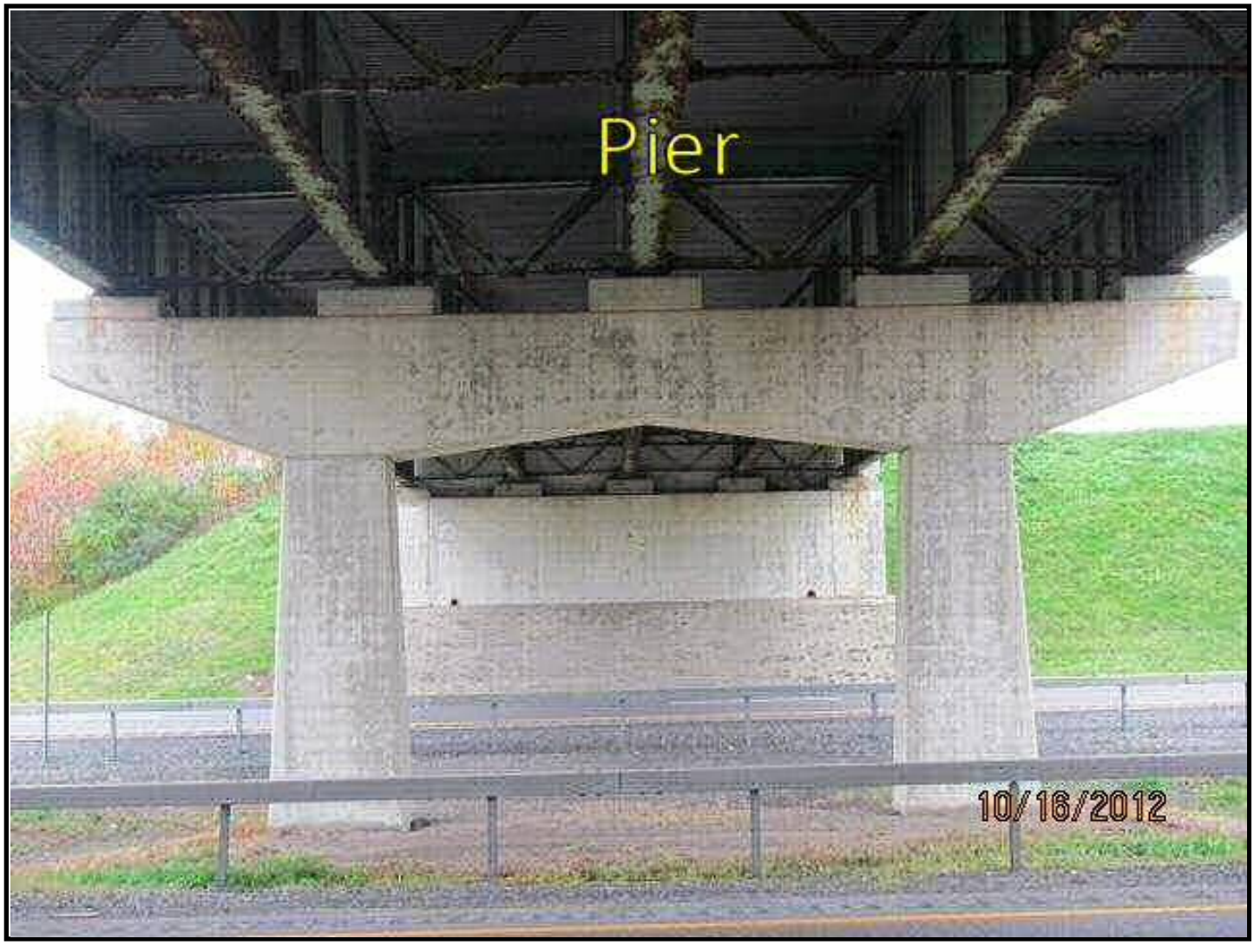

LEVEL 1 LOAD RATING SUMMARY SHEET

Region/County Region 3/Onondaga BIN 1093682
Feature(s) Carried and Crossed I-481 Northbound/I-90
Date of field inspection upon which Level 1 rating is based 2/25/2014

OVERALL BRIDGE RATINGS (BASED ON LOWEST RATED ELEMENTS):

Total number of rating units 1

	H inventory	H operating	HS inventory	HS operating
Rating	H 40.73 (tons)	H 68.02 (tons)	HS 60.29 (tons)	HS 100.69 (tons)
Lowest rated element	Interior Girder G2, G3, and G4	Interior Girder G2, G3, and G4	Interior Girder G2, G3, and G4	Interior Girder G2, G3, and G4

Analysis method LFR Comments

Individual Rating Unit Level 1 values:

Rating unit span(s) 1

Main member ratings

	H inventory	H operating	HS inventory	HS operating
Rating	H (tons)	H (tons)	HS (tons)	HS (tons)
Lowest rated element				

Analysis method Comments

Floorbeam ratings

	H inventory	H operating	HS inventory	HS operating
Rating	H (tons)	H (tons)	HS (tons)	HS (tons)
Lowest rated element				

Analysis method Comments

Stringer ratings

	H inventory	H operating	HS inventory	HS operating
Rating	H 40.73 (tons)	H 68.02 (tons)	HS 60.29 (tons)	HS 100.69 (tons)
Lowest rated element	Interior Girder G2, G3, and G4	Interior Girder G2, G3, and G4	Interior Girder G2, G3, and G4	Interior Girder G2, G3, and G4

Analysis method LFR Comments

Certified by Date

Quality Control Engineer Signature Date
Agency or Company represented by certifier

Note:
-If connection ratings govern, record them under stringer ratings for stringer – floorbeam connection, floorbeam ratings for floorbeam-main member connections, etc.
-When Level 1 results indicated the need for load posting or other corrective action, the NYSDOT Regional Structures Engineer shall be notified immediately.
-Load ratings should be filed in the regional office within 60 days of completion of calculations.
-Bridges shall be flagged based on Level I results in accordance with the current NYSDOT flagging procedure.
-Bridge load posting, closure, etc. determinations shall be made as results are being produced.

PARSONS

100 Broadway
New York, NY 10005
Phone: 212-266-8300
Fax: 212-571-6825
www.parsons.com

TECHNICAL MEMORANDUM

FROM: Kian Siang Chau, P.E
NYSPE 082744

DATE: MARCH 20, 2014

RE: SEISMIC SCREENING SUMMARY
NEW YORK STATE DEPARTMENT OF TRANSPORTATION
D031085; PIN 3501.60; I-81

BIN: 1093682 (I-481 NB/I - 90)

This memorandum summarizes the seismic screening conducted for BIN 1093682 as part of the Interstate 81 Project in Syracuse, NY. The purpose of the screening is to determine if seismic retrofits are warranted at the superstructure to substructure connection, and if further seismic evaluation of the structure is required. This memorandum will give the screening results, retrofits required and recommendations for further seismic evaluation of the structure.

SCREENING PROCEDURE

The seismic screening was performed in accordance with the FHWA Seismic Retrofitting Manual for Highway Structures: Part 1 - Bridges, January 2006. As per the referenced manual, seismic screenings were performed for both lower level and upper level earthquake ground motion. The lower level earthquake ground motion has a reasonable likelihood of occurrence within the life of the bridge (50% probability of exceedance within a 75 year bridge life). The upper level earthquake ground motion has a finite likelihood of occurrence within the life of the bridge (7% probability of exceedance within a 75 year bridge life).

Values for the spectral acceleration for the Syracuse area used in the screening are as follows:

- Lower Level Earthquake Ground Motion for a Short Period (0.2 seconds): $S_S = 0.0251$
- Lower Level Earthquake Ground Motion for a Long Period (1.0 seconds): $S_1 = 0.0076$
- Upper Level Earthquake Ground Motion for a Short Period (0.2 seconds): $S_S = 0.139$
- Upper Level Earthquake Ground Motion for a Long Period (1.0 seconds): $S_1 = 0.047$

These values are considered constant and are the same for all seismic screenings of bridges in the Syracuse area.

The Site Class is based on the soil conditions at the bridge location. It was determined that this parameter has little effect on the results of the seismic screening because the spectral acceleration values for the Syracuse area are small. Based on this, a site class of D was used for all seismic screenings of bridges in the Syracuse area.

Bridge parameters used in the seismic screening were retrieved from the record drawings and WinBolts data.

The seismic screening takes into account the anticipated service life, importance, and the seismic exposure of the bridge to determine a seismic retrofit category (SRC). The SRC is then used to determine seismic evaluation methods and retrofit measures. There are four SRCs, A through D. Seismic retrofit category A is the lowest category; bridges in this category do not require retrofits or further seismic evaluation. Seismic retrofit category D is the highest category; bridges in this category requiring the most rigorous seismic evaluations and retrofits.

SCREENING RESULTS

The SRC for the bridge is "**C**" for lower level earthquake ground motion and "**B**" for upper level earthquake ground motion.

RETROFITS REQUIRED

Seat width improvements are required at pier. Additional retrofits may be required if further seismic evaluation is needed.

RECOMMENDATIONS FOR FURTHER SEISMIC EVALUATION

No further seismic evaluation is required for lower level earthquake ground motion. For the upper level earthquake ground motion, it is recommended that the capacities of the bearings are checked as per Section 5.2 of the referenced manual.

Retrofit cost estimates will be provided after any further required seismic evaluations are completed.

BRIDGE DECK EVALUATION REPORT

RECOMMENDATIONS

The bridge deck inspection findings and evaluation are used as a tool for developing the scope of work and cost estimates for the development and comparison of alternatives for the overall project.

The total damaged area of the deck is 0% of the total deck surface area. The cores indicate the reinforcement steel is 3.75 inches to 4.75 inches below the surface of the deck. The lab test indicates that chloride ion concentrations at all the sample locations are significantly higher than the corrosion threshold for steel.

Due to the age, condition and high chloride ion content of the bridge deck concrete, the bridge deck should be rehabilitated or replaced to meet the current standards and to mitigate excessive future maintenance costs.

ALTERNATIVES

- Rehabilitation Alternative - 2 inches Bonded Concrete Overlay
  - Scope

    The scope of this alternative will include the complete removal of the bridge railings, curb and safety walks, and fascias to the level of the original top of the deck. The joint will be removed. The top 2 inches of the entire deck will be removed and areas of deteriorated concrete must be removed to at least 1 inch below the level of the reinforcement steel and to the horizontal and vertical limit of any detectable hollow areas. Additionally, any further areas of deteriorated concrete detected will require full depth removal. Any corrosion of the reinforcement steel will be removed by sandblasting or hydro-blasting. The proposed deck overlay will be a 2 inches thick bonded concrete overlay yielding a nominal 9.5 inches standard thickness deck. A new single-sloped concrete barrier and a new armorless joint will be installed. The Level 1 Load Rating for the final condition was found to be acceptable.

- Useful Life Expectancy

  The removal of the top 2 inches of the existing deck will remove a portion of the deck with high chloride ion concentrations. It can be anticipated that chloride ions will continue to migrate into the remaining deck to the reinforcing steel resulting in further corrosion-related deterioration of the deck surface. Concrete admixtures will be included in the bonded concrete overlay to impede the continued penetration of chloride into the deck from the surface. This alternative will result in an extended useful life expectancy estimated at 20 years.

The design life of the project is 30 years (ETC + 30). This alternative does not meet the project objectives of obtaining 30 years of service life and is not evaluated further.

- Rehabilitation Alternative – 100% Deep Removal and Partial Deck Reconstruction
  - Scope

    The scope of this alternative will include the complete removal of the bridge railings, curb and safety walks, and fascias to the level of the original top of the deck. The joint will be removed. The scope of this alternative will include partial depth reconstruction with removal of the concrete to at least 1 inch below the top mat of the reinforcement steel. Additionally, any further areas of deteriorated concrete detected will require full depth removal. Any corrosion of the reinforcement steel will be removed by sandblasting or hydro-blasting. Due to the condition of the deck, full depth removal is not likely and not included in the cost estimate. The proposed deck partial reconstruction will be a nominal 5.75 inches thick concrete deck yielding a 9.5 inches standard thickness deck. A new single-sloped concrete barrier and a new armorless joint will be installed. The Level 1 Load Rating for the final condition was found to be acceptable.
  - Useful Life Expectancy

    This alternative will provide a useful life expectancy is estimated at 35 years.
  - Cost Estimate

    The estimated cost for this alternative is $663,000. The Engineer's Opinion of Probable Construction Cost worksheet is at the end of this section.

- Replacement Alternative – Cast-In-Place Concrete
  - Scope

    This scope of this alternative will include the complete demolition of the existing bridge deck, bridge railings, curb and safety walks, fascias and bridge joint. The bridge deck will be replaced with a new 9.5 inches standard thickness concrete deck. A new single-sloped concrete barrier and a new armorless joint will be installed. The Level 1 Load Rating for the final condition was found to be acceptable.
  - Useful Life Expectancy

    This alternative will provide a useful life expectancy is estimated at 40+ years.
  - Cost Estimate

    The estimated cost for this alternative is $925,000. The Engineer's Opinion of Probable Construction Cost worksheet is at the end of this section.

- Replacement Alternative – Pre-cast Concrete Deck Panels
  - Scope

    The scope of this alternative is similar to the Cast-In-Place Concrete Deck Replacement Alternative except the deck structure will be precast panels. This alternative offers reduced construction time over conventional construction.
  - Useful Life Expectancy

    This alternative will provide a useful life expectancy is estimated at 40+ years.
  - Cost Estimate

    The comparison of accelerated construction to conventional construction is beyond the current scope of this evaluation.